A330-200/300
TECHNICAL TRAINING MANUAL
MAINTENANCE COURSE - T1 (LVL 2&3) (RR Trent 700)
AIR CONDITIONING

This document must be used for training purposes only

Under no circumstances should this document be used as a reference

It will not be updated.

All rights reserved
No part of this manual may be reproduced in any form,
by photostat, microfilm, retrieval system, or any other means,
without the prior written permission of AIRBUS S.A.S.

AIRBUS Environmental Recommendation
Please consider your environmental responsability before printing this document.

AIR CONDITIONING

Air Conditioning Line Maintenance Briefing (2) 2

AIR GENERATION/TEMP CONTROL & RECIRCULATION

Air Conditioning System Overview (3) 24
Pack Air Flow Regulation D/O (3) 26
Pack Temperature Control D/O (3) 42
Emergency RAM Air Inlet D/O (3) 62
Cockpit/Cabin Air Temperature Control D/O (3) 66
Air Recirculation and Management D/O (3) 88

COCKPIT/CABIN AIR DISTRIBUTION & VENTILATION

Cockpit/CAB Air Distribution & VENT D/O (3) 96
Galley and Toilet Ventilation D/O (3) 102
Aft Galley Heating D/O (3) 106

CARGO COMPT VENTILATION/TEMPERATURE CONTROL

FWD Cargo COMPT VENT/TEMP CTL SYS D/O (3) 116
AFT Cargo COMPT VENT D/O (3) 118
Bulk Cargo COMPT VENT/Heating D/O (3) 120

PRESSURIZATION

Pressurization System D/O (3) 128

AVIONICS EQUIPMENT VENTILATION

Avionics Equipment Ventilation D/O (3) 144
Avionics Eqpt. Ground Cooling D/O (option) (3) 152

AIR CONDITIONING BAY VENTILATION

System D/O (3) 162

MAINTENANCE PRACTICE

Air Conditioning MCDU Pages (2) 170
Air Conditioning System Base Maintenance (3) 178

AIR CONDITIONING LINE MAINTENANCE BRIEFING (2)

GENERAL

The air conditioning system maintains the air in the pressurized fuselage areas at the correct level of pressure, temperature and freshness. The pressurized areas are:
- the cockpit,
- the 6 zones of the passenger cabin,
- the lavatories and galleys areas,
- the crew rest compartments, when installed,
- the avionics compartment,
- the FWD, AFT and BULK cargo compartments.

The air conditioning system also ensures the ventilation of the air conditioning bay, which is a non-pressurized area
Air supply comes from the pneumatic system. Then, air is regulated in temperature by the temperature regulation sub-system. Correct level of air freshness in the pressurized areas and proper ventilation of the avionics equipment is ensured by the ventilation sub-system. The pressurization sub-system ensures a cabin altitude compatible with crew and passengers comfort.

G7508471 - G3NT1T0 - FM21B100000003

COCKPIT

FWD, MID, AFT CABIN

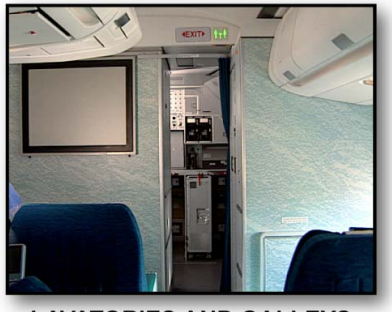
LAVATORIES AND GALLEYS

AVIONICS COMPARTMENT

FWD CARGO

AFT CARGO

BULK CARGO

CREW REST COMPARTMENT

AIR CONDITIONING BAY VENTILATION

NON PRESSURIZED AREA

BLEED AIR → TEMPERATURE REGULATION → DISTRIBUTION & VENTILATION → PRESSURIZATION

GENERAL

AIR CONDITIONING LINE MAINTENANCE BRIEFING (2)

TEMPERATURE CONTROL AND RE-CIRCULATION

Bleed air coming from the pneumatic system is first regulated in flow by two pack flow control valves controlled by the Pack Controllers (PCs) according to flow demand inputs received from the AIR panel and the Zone Controller (ZC).
Bleed air is then delivered to two independent air conditioning packs which ensure basic temperature regulation. Each air conditioning pack mainly consists of an Air Cycle Machine (ACM) and heat exchangers using ram air flowing through ram air inlet and ram air outlet flaps. Pack temperature regulation is controlled by the associated PC according to a temperature demand computed by the ZC based upon inputs received from the AIR panel and the Flight Attendant Panel (FAP).
The cooled fresh air is then fed into a mixer unit.
On ground, a ground cart supplies preconditioned air through Low Pressure (LP) ground connectors. In flight, if both packs are inoperative, an emergency ram air inlet will enable to maintain air supply to the cabin. The emergency ram air supply is directly controlled from the AIR panel.
Fine temperature adjustment of air distributed in the pressurized zones is obtained by controlling the amount of hot air added to the air coming from the mixer unit. This is under the control of the ZC according to the temperature demand inputs received from the AIR panel and the FAP.
A part of cabin air is re-circulated by re-circulation fans through re-circulation valves in order to limit the bleed air demand on the engines. This re-circulated air is mixed with fresh air coming from the air conditioning packs into the mixer unit. Re-circulated air is also used for avionics ventilation purpose. The re-circulation fans and valves are controlled by the Ventilation Controller (VC). The re-circulation fans can be manually switched off from the VENTILATION panel.

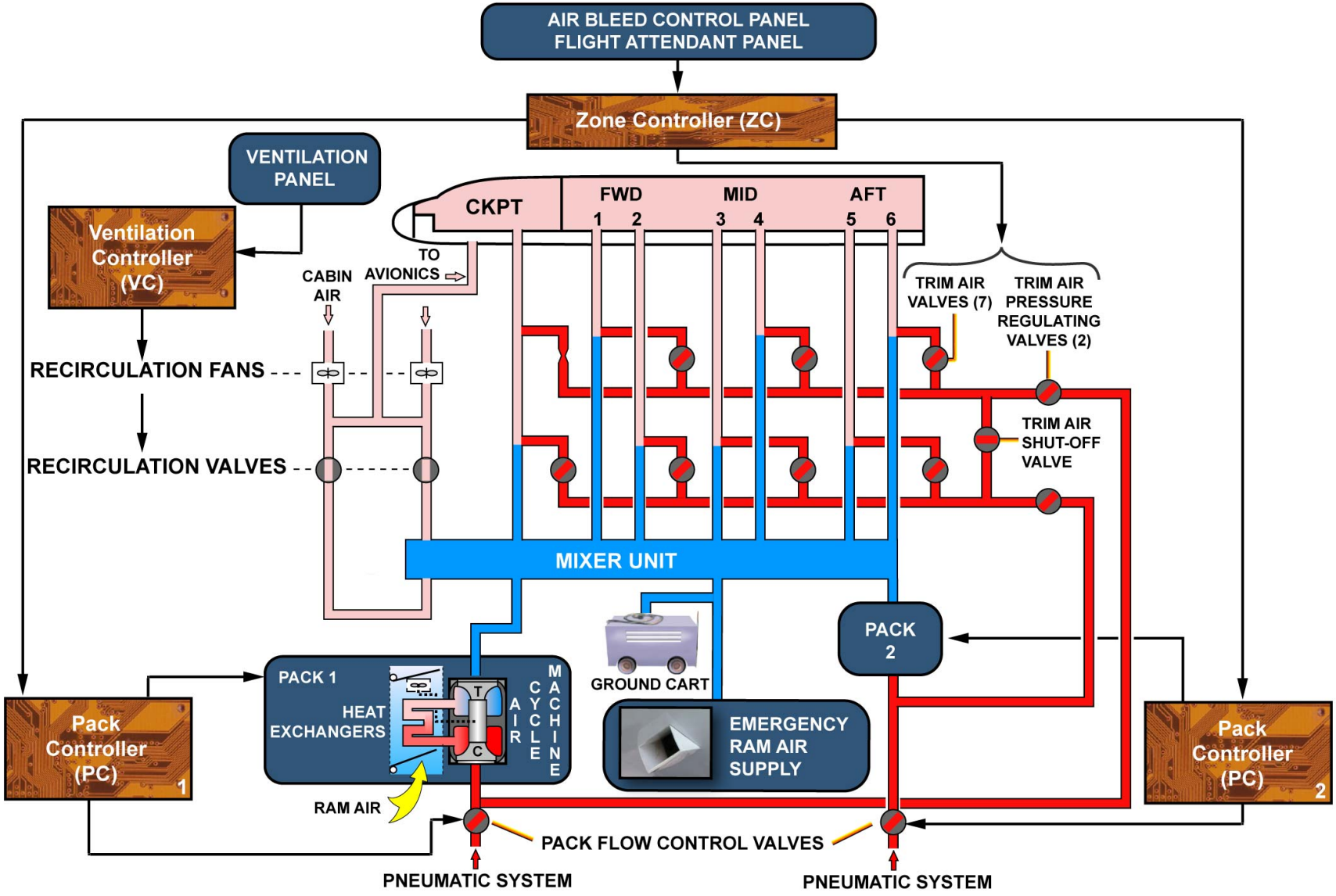

TEMPERATURE CONTROL AND RE-CIRCULATION

G7508471 - G3NT1T0 - FM21B100000003

AIR CONDITIONING LINE MAINTENANCE BRIEFING (2)

AVIONICS AND AIR CONDITIONING COMPT VENTILATION

The two re-circulation fans used for cabin air re-circulation are also used as blower fans for the avionics equipment ventilation. The system carries out proper ventilation of the rack equipment and various panels in order to avoid any overheat condition. It operates continuously whenever aircraft electrical power is available. An extract fan extracts the air from the avionics equipment ventilation. Air is discharged either overboard through the overboard valve or under the cargo floor through the underfloor valve. When the overboard valve is open, the underfloor valve is closed and vice versa. The Avionics Equipment Ventilation Computer (AEVC) controls and monitors the avionics ventilation system. A manual override is possible from the VENTILATION panel.
The air conditioning bay is ventilated on ground and in flight as soon as the air conditioning packs operate in order to avoid any overheat condition in this compartment. The air conditioning bay ventilation system uses RAM air through NACA inlet to cool down the compartment. The system is monitored by the AEVC.

G7508471 - G3NT1T0 - FM21B100000003

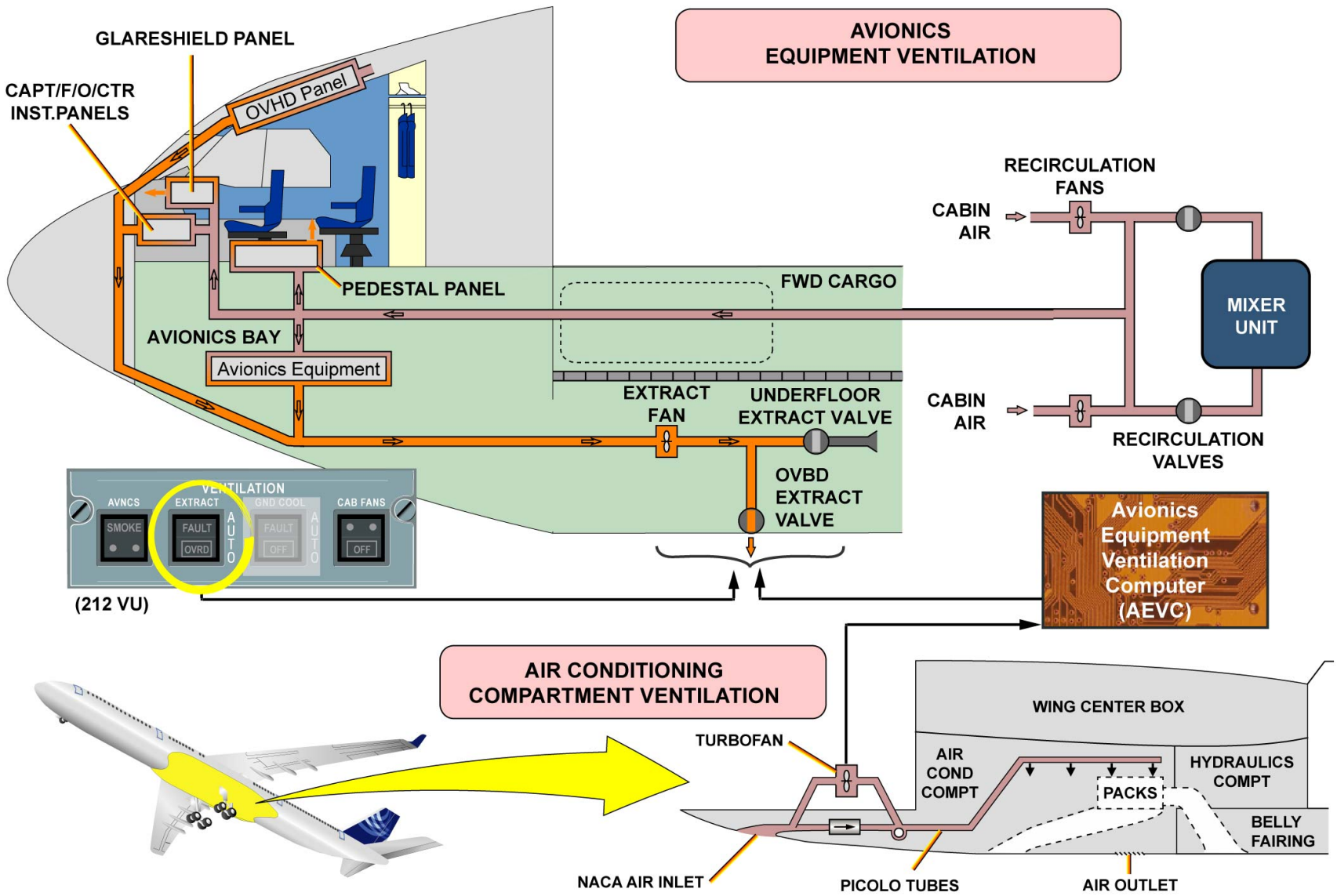

AVIONICS AND AIR CONDITIONING COMPT VENTILATION

G7508471 - G3NT1T0 - FM21B100000003

AIR CONDITIONING LINE MAINTENANCE BRIEFING (2)

PRESSURIZATION

The pressurization system makes sure that cabin altitude is safe and compatible with crew and passenger comfort. The cabin pressurization is done by controlling the amount of cabin air discharged overboard through two outflow valves located on the lower part of the aircraft fuselage. The system is controlled automatically by the Cabin Pressure Controllers (CPCs), or manually from the CABIN PRESS panel.
When the aircraft is on ground, the Residual Pressure Control Unit (RPCU) forces both outflow valves to move to the fully open position, overriding the automatic control from CPCs and the manual control as well. This is to prevent any violent door opening in case of residual cabin pressure.
Three safety valves are installed at the rear pressure bulkhead to prevent excessive positive or negative differential pressure. Due to the large volume of the fuselage, one negative-pressure relief valve helps the safety valves to prevent negative differential pressure.

G7508471 - G3NT1T0 - FM21B1000000003

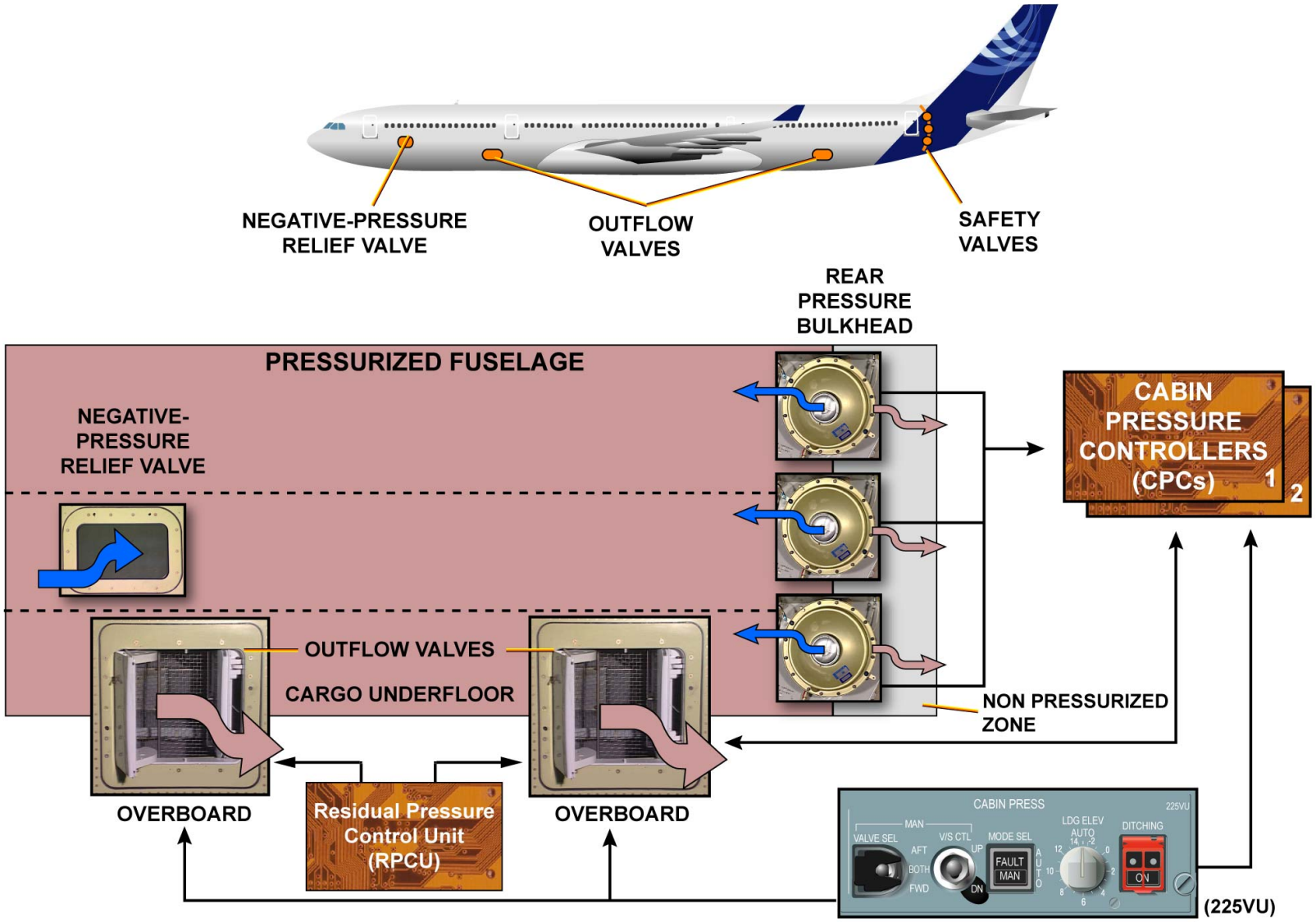

PRESSURIZATION

AIR CONDITIONING LINE MAINTENANCE BRIEFING (2)

DEACTIVATION OF THE TURBOFAN SUPPLY LINE

WARNING: MAKE SURE THAT AIR IS NOT SUPPLIED TO THE AIR CONDITIONING SYSTEM FROM THE MAIN ENGINE, THE APU OR THE GROUND SOURCE. HOT COMPRESSED AIR CAN CAUSE INJURY TO STAFF. DO NOT TOUCH COMPONENTS UNTIL THEY ARE SUFFICIENTLY COOL TO PREVENT BURNING INJURIES.

Make sure that all BLEED P/Bs are released out and tagged. Put a warning notice on the HP ground connector as well.
Remove the applicable belly fairing panel(s) for access.
Disconnect the supply line from the turbofan. Connect the supply line to the dummy connection on the structure and put blanking plugs on the disconnected line end.
To deactivate the mechanic call horn you must have access to the left relay plate in the avionic bay; the dedicated pin of the turbofan must be disconnected from the terminal block on the left relay plate. Only turbofan monitoring is deactivated, but the related warning stays in view. The call horn remains functional for the other functions.

NOTE: As an alternative, you can push the HORN RESET P/B on the external power control panel. This panel is on the fuselage behind the NLG. This stops the mechanic call horn but you will hear it again after the subsequent flight if the fault continues.

If no other deactivation servicing tasks have to be performed, the area can be closed. All tools, test and support used during this procedure should be removed.

G7508471 - G3NT1T0 - FM21B100000003

✓ SAFETY PRECAUTIONS

WARNING

MAKE SURE THAT AIR IS NOT SUPPLIED TO THE AIR CONDITIONING SYSTEM FROM THE MAIN ENGINE, THE APU OR A GROUND SOURCE. HOT COMPRESSED AIR CAN CAUSE INJURY TO STAFF. DO NOT TOUCH COMPONENTS UNTIL THEY ARE SUFFICIENTLY COOL TO PREVENT BURNING INJUIES.

HP GROUND CONNECTORS

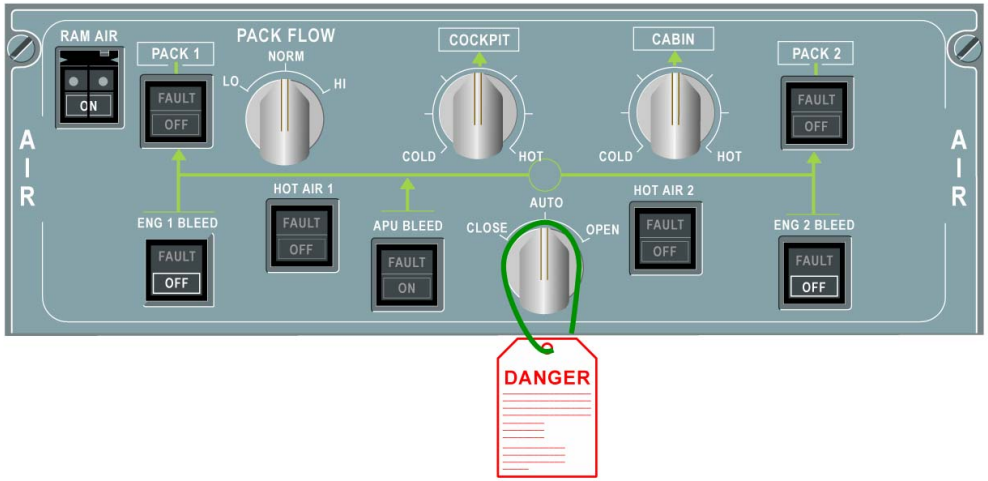

ECAM SD

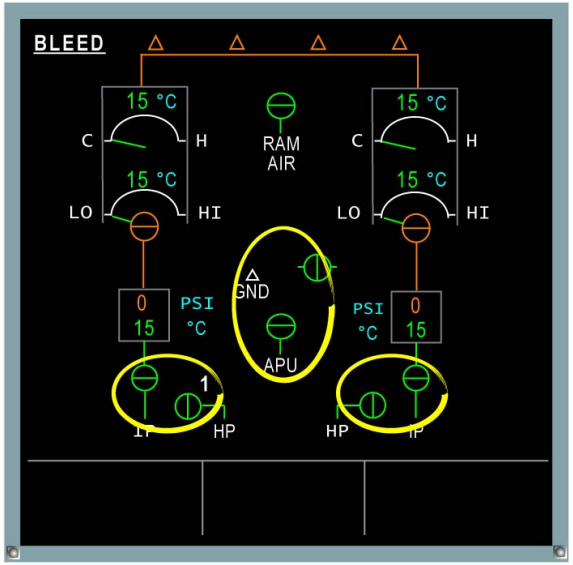

DEACTIVATION OF THE TURBOFAN SUPPLY LINE

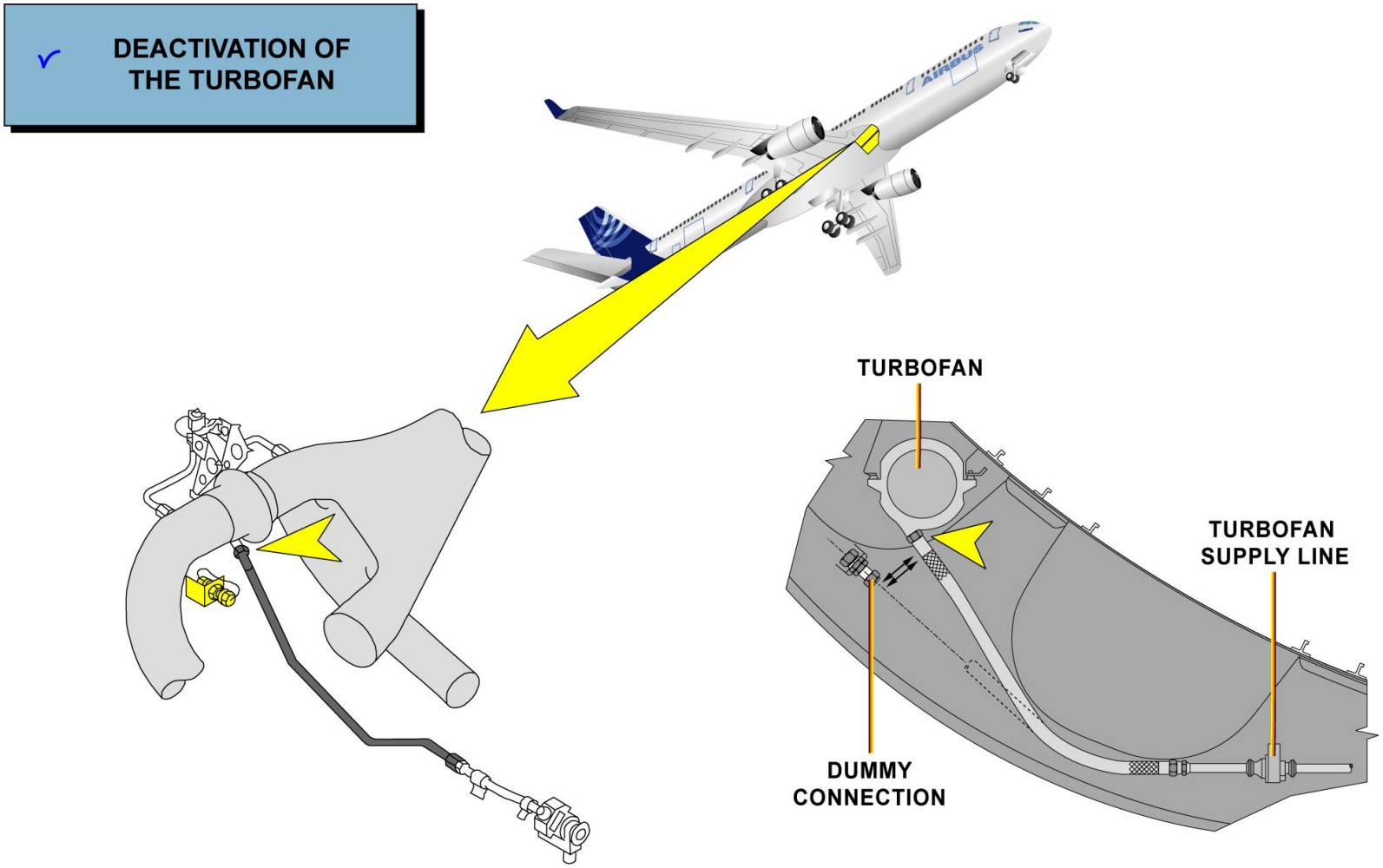

DEACTIVATION OF THE TURBOFAN SUPPLY LINE

G7508471 - G3NT1T0 - FM21B1000000003

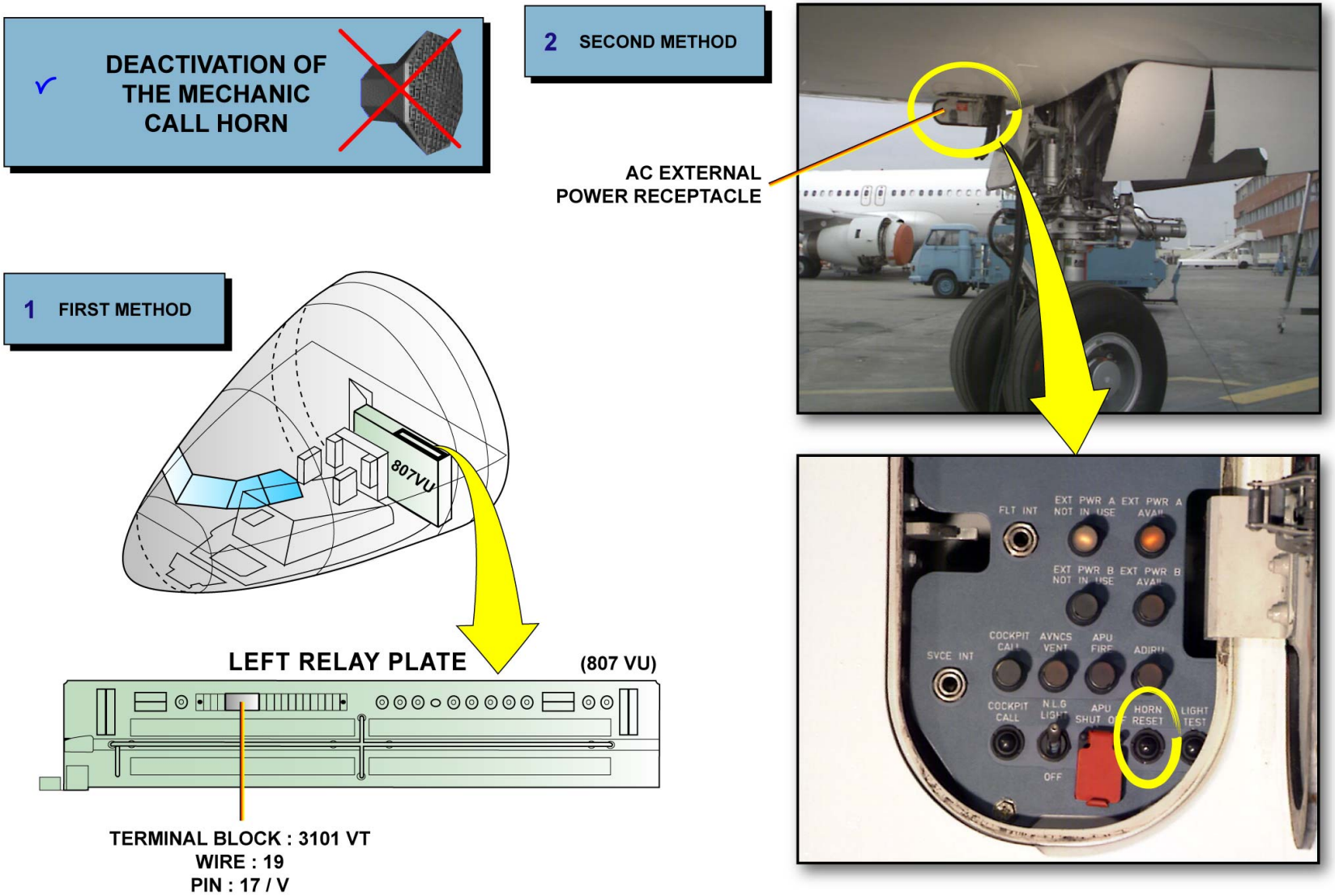

DEACTIVATION OF THE TURBOFAN SUPPLY LINE

AIR CONDITIONING LINE MAINTENANCE BRIEFING (2)

DEACTIVATION OF THE AVIONICS VENTILATION OVERBOARD EXTRACT VALVE

Make sure that all engines are shut down and that the Full Authority Digital Engine Control GrouND PoWeR(FADEC GND PWR) P/Bs are not selected ON.

CAUTION: DO NOT USE YOUR FINGERS TO SET THE SWITCHES TO THE "ON" POSITION. USE A STICK, AND BE VERY CAREFUL TO THE HANDLE THAT WILL ROTATE IF THE AVIONICS EQUIPMENT VENTILATION COMPUTER (AEVC) SET THE VALVE TO THE CLOSED POSITION.

In case of a failure, the avionics ventilation overboard extract valve can be manually operated and deactivated in the open position for normal operation on the ground:
- push to release the handle from its recess,
- pull the handle out,
- set the deactivation switch to OFF,
- pull the handle further to engage the drive mechanism,
- fold out the handle and turn clockwise until the main flap is Fully Open (FO),
- fold and latch the handle.

For dispatch the valve must be deactivated with the main flap closed and the auxiliary flap open:
- push to release the handle from its recess,
- pull the handle out,
- set the deactivation switch to OFF,
- pull the handle further to engage the drive mechanism,
- fold out the handle and turn it counterclockwise until the main flap is Fully Closed (FC) and the auxiliary flap is still open,
- fold and latch the handle.

If no other deactivation servicing tasks have to be performed, the area can be closed. All tools, test and support used during this procedure have to be removed.

✓ JOB SET-UP

✓ ENGINE SHUT DOWN

(285VU)

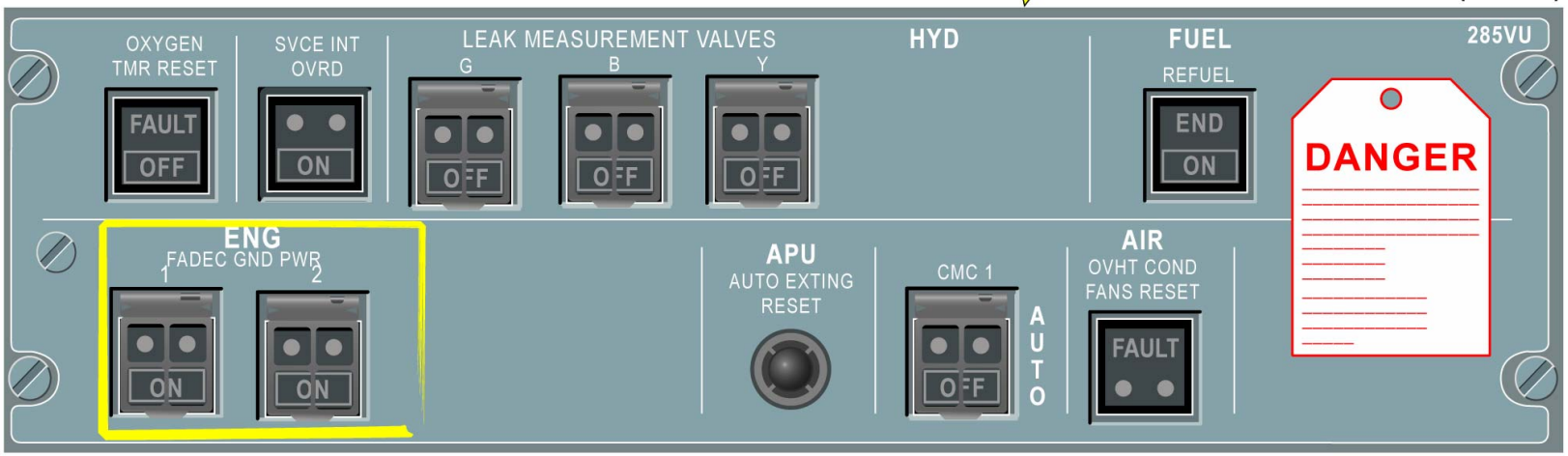

DEACTIVATION OF THE AVIONICS VENTILATION OVERBOARD EXTRACT VALVE

G7508471 - G3NT1T0 - FM21B100000003

✓ DEACTIVATION OF THE AVIONICS VENTILATION OVERBOARD EXTRACT VALVE IN FULLY OPEN POSITION FOR GROUND OPERATIONS WITH THE ENGINE STOPPED.

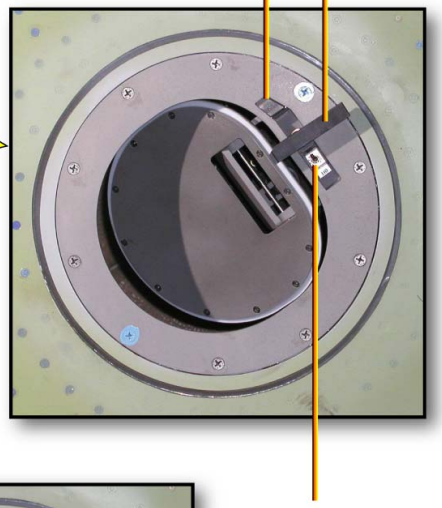

FULLY OPEN POSITION (GROUND OPS ONLY)

CAUTION

DO NOT USE YOUR FINGERS TO SET THE SWITCHES TO THE "ON" POSITION USE A STICK, AND BE VERY CAREFUL. THE AVIONICS EQUIPMENT VENTILATION COMPUTER (AEVC) WILL POSSIBLY PUT THE SKIN VALVES DIRECTLY IN THE CLOSED POSITION AND THEY WILL CUT YOUR FINGERS.

DEACTIVATION OF THE AVIONICS VENTILATION OVERBOARD EXTRACT VALVE

DEACTIVATION OF THE AVIONICS VENTILATION OVERBOARD EXTRACT VALVE IN NOT FULLY OPEN POSITION A SHORT TIME BEFORE ENGINE START FOR DISPATCH PER MMEL.

OVERBOARD VALVE

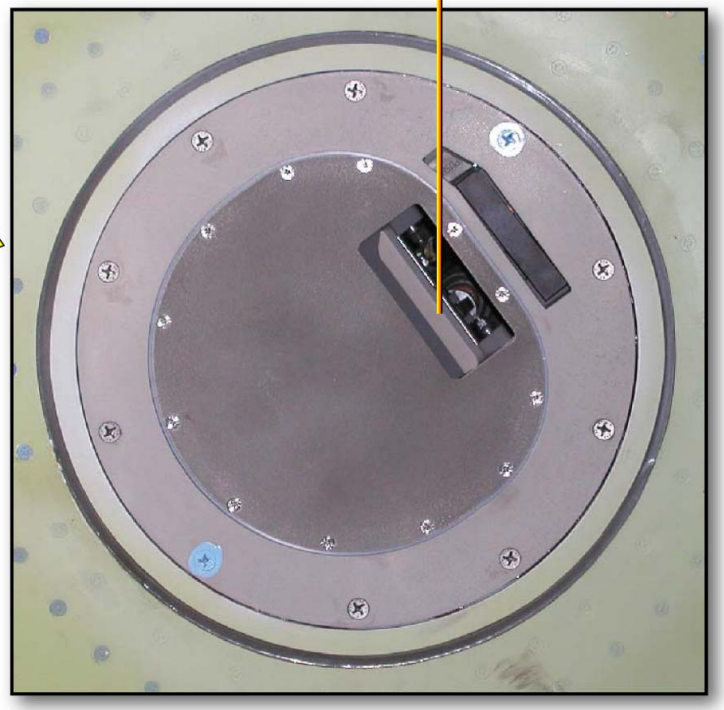

MAIN FLAP CLOSED, AUXILIARY FLAP OPEN
(PARTIALLY OPEN POSITION / DISPATCH POSITION)

DEACTIVATION OF THE AVIONICS VENTILATION OVERBOARD EXTRACT VALVE

AIR CONDITIONING LINE MAINTENANCE BRIEFING (2)

DEACTIVATION OF THE PACK FLOW CONTROL VALVE

WARNING: MAKE SURE THAT AIR IS NOT SUPPLIED TO THE AIR CONDITIONING SYSTEM FROM THE MAIN ENGINE, THE APU OR A GROUND SOURCE. HOT COMPRESSED AIR CAN CAUSE INJURY TO STAFF. DO NOT TOUCH COMPONENTS UNTIL THEY ARE SUFFICIENTLY COOL TO PREVENT BURNING INJURIES.

Make sure that all BLEED P/Bs are released out and tagged. Put a warning notice on the HP and LP ground connectors as well.

Release PACK 1 or 2 P/BSW to the OFF position, and open the applicable RESET Circuit Breaker (C/B) - PACK CONT 1 for pack 1 or PACK CONT 2 for pack 2. Remove the applicable belly fairing panel(s) for access.

Remove the lockwire from the locking screw and move the locking screw from position 1 to position 2.

Close the applicable RESET C/B.

The area can be closed. All tools, test, support and warning notices used during this procedure should be removed.

✓ SAFETY PRECAUTIONS

WARNING

MAKE SURE THAT AIR IS NOT SUPPLIED TO THE AIR CONDITIONING SYSTEM FROM THE MAIN ENGINE, THE APU OR A GROUND SOURCE. HOT COMPRESSED AIR CAN CAUSE INJURY TO STAFF. DO NOT TOUCH COMPONENTS UNTIL THEY ARE SUFFICIENTLY COOL TO PREVENT BURNING INJUIES.

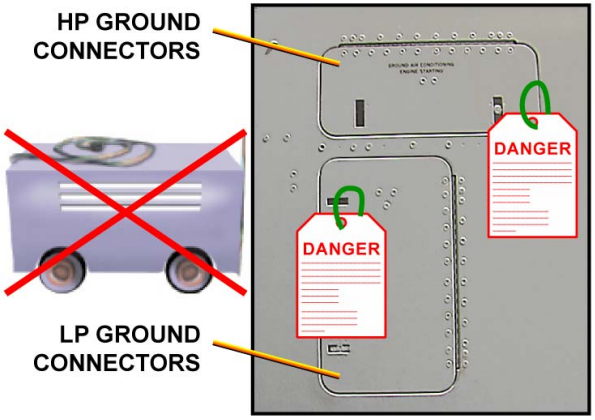

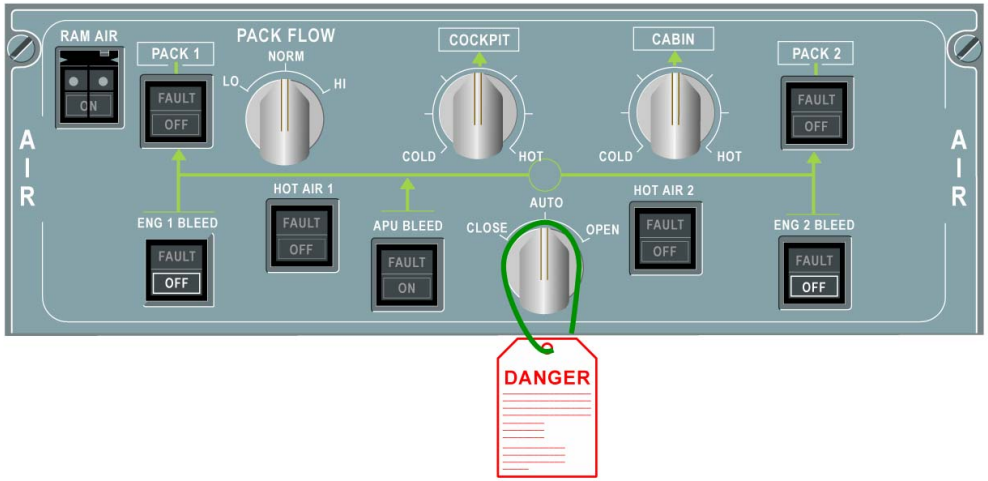

ECAM SD

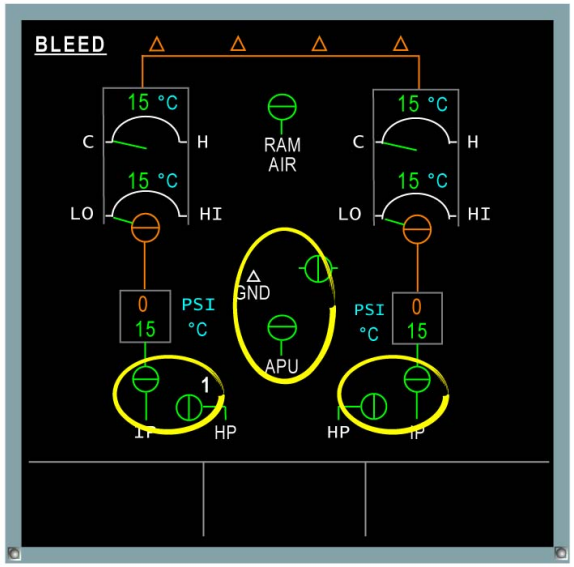

DEACTIVATION OF THE PACK FLOW CONTROL VALVE

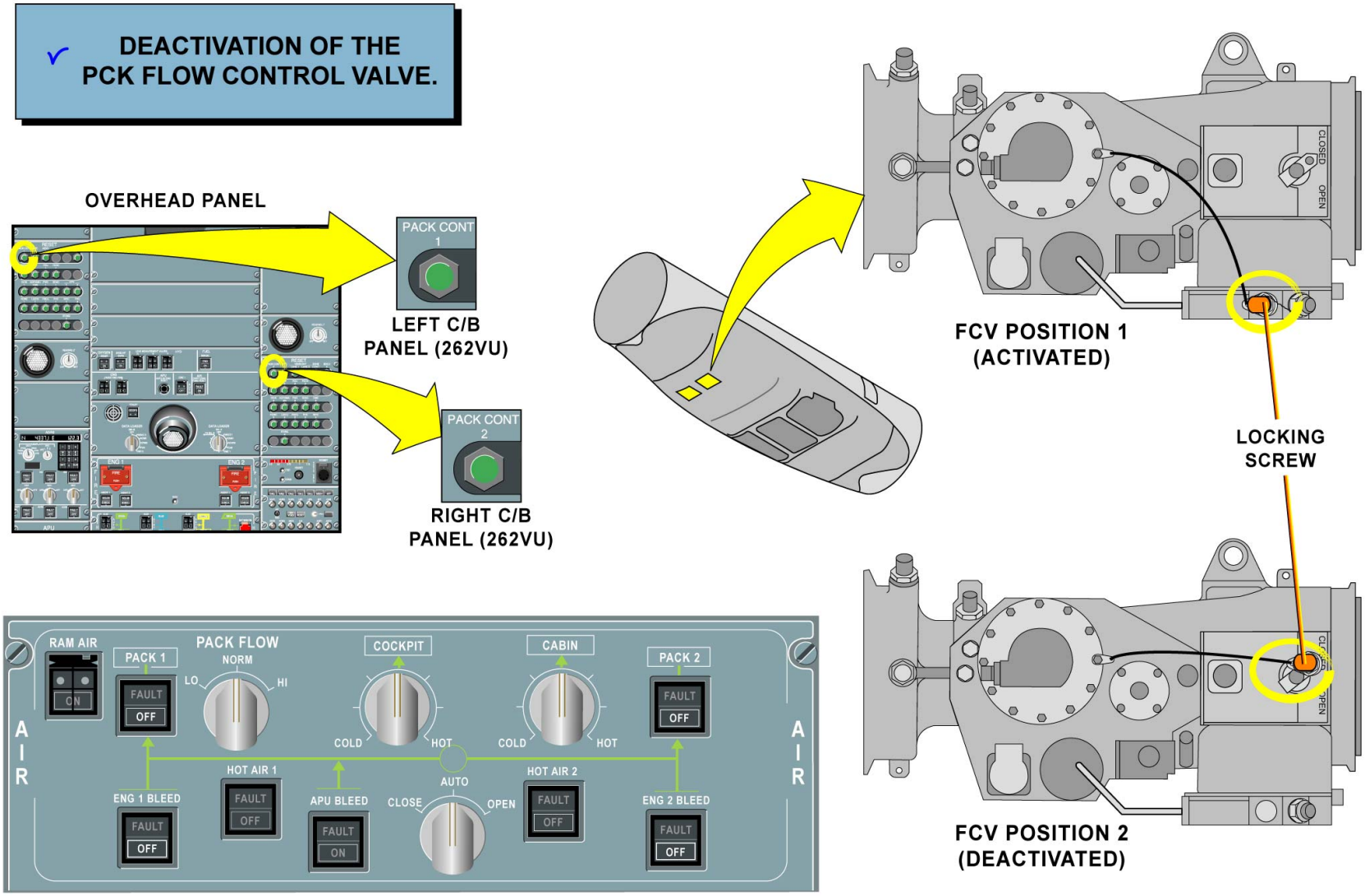

DEACTIVATION OF THE PACK FLOW CONTROL VALVE

G7508471 - G3NT1T0 - FM21B100000003

This Page Intentionally Left Blank

G7508471 - G3NT1T0 - FM21B1000000003

AIR CONDITIONING LINE MAINTENANCE BRIEFING (2)

PRESSURIZATION SYSTEM MAINTENANCE TIPS

For the pressurization system, the automatic cabin pressure control system 1 or 2, may be inoperative provided cabin pressure indications are operative on ECAM in manual mode.
The cabin pressure indications on ECAM are provided by the CPC fitted at the position of the system 1.

G7508471 - G3NT1T0 - FM21B100000003

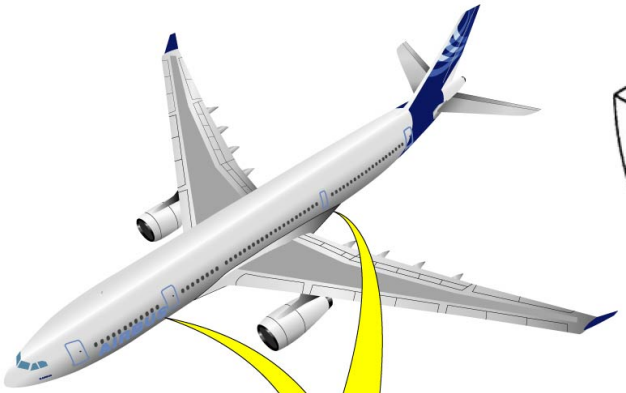

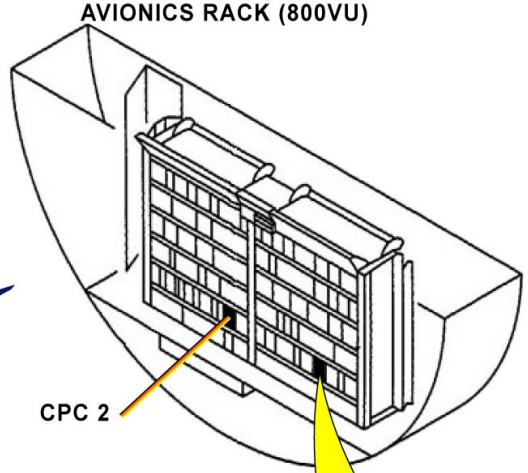

ECAM SD

OUTFLOW VALVE

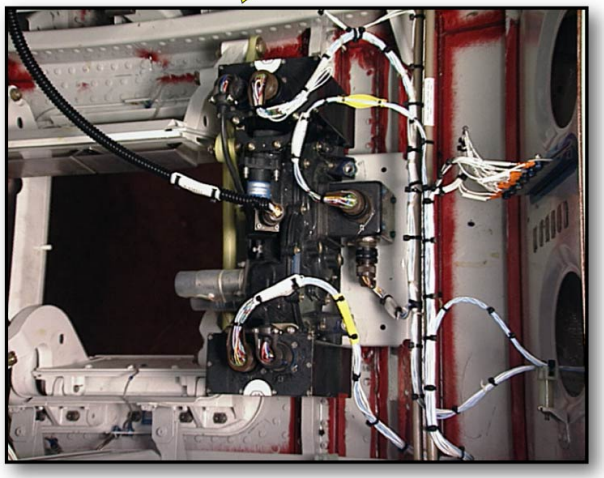

CPC 1

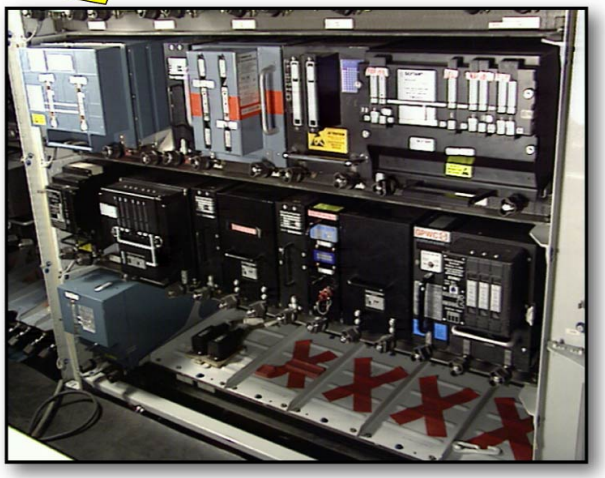

PRESSURIZATION SYSTEM MAINTENANCE TIPS

AIR CONDITIONING SYSTEM OVERVIEW (3)

AIR CONDITIONING SYSTEM OVERVIEW

Bleed air coming from the pneumatic system is first regulated in flow by two pack flow control valves controlled by the Pack Controllers (PCs) according to flow demand inputs received from the AIR panel and the Zone Controller (ZC).
Bleed air is then delivered to two independent air conditioning packs, which make sure that basic temperature is regulated. Each air conditioning pack mainly has an Air Cycle Machine (ACM) and heat exchangers using ram air flowing through ram air inlet and ram air outlet flaps. Pack temperature regulation is controlled by the related PC according to a temperature demand computed by the ZC based upon inputs received from the AIR panel and the Flight Attendant Panel (FAP).
The cooled fresh air is then fed into a mixer unit.
On ground, a ground cart supplies preconditioned air through Low Pressure (LP) ground connectors. In flight, if both packs are inoperative, an emergency ram air inlet will help to maintain air supply to the cabin. The emergency ram air supply is directly controlled from the AIR panel.
Fine temperature adjustment of air distributed in the pressurized zones is obtained by controlling the amount of hot air added to the air coming from the mixer unit. This air temperature adjustment is done under the control of the ZC according to the temperature demand inputs received from the AIR panel and the FAP.
A part of cabin air is re-circulated by re-circulation fans through re-circulation valves in order to limit the bleed air demand on the engines. This re-circulated air is mixed with fresh air coming from the air conditioning packs into the mixer unit. Re-circulated air is also used for avionics ventilation. The Ventilation Controller (VC) controls the re-circulation fans and valves The re-circulation fans can be manually switched off from the VENTILATION panel.

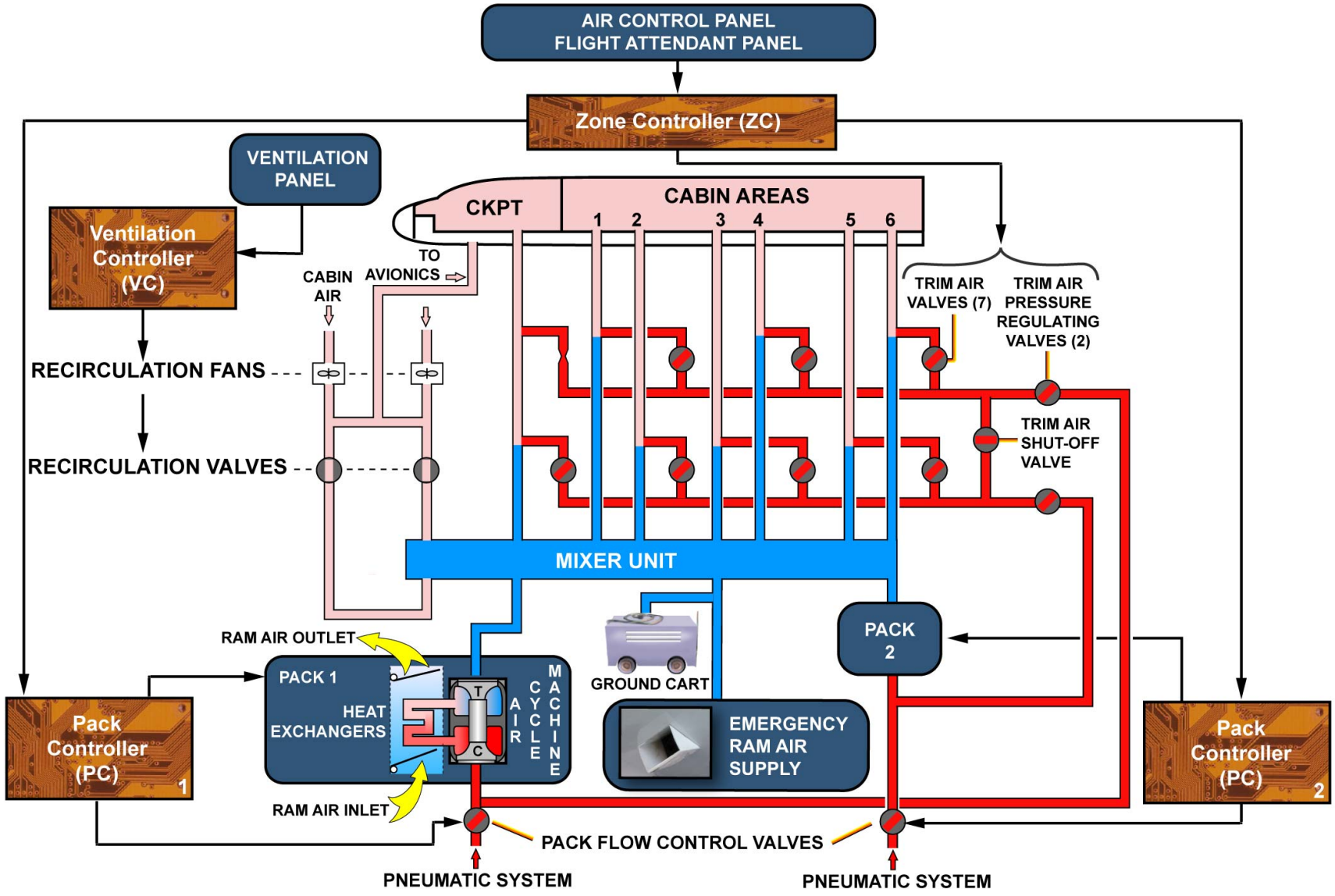

AIR CONDITIONING SYSTEM OVERVIEW

G7508471 - G3NT1T0 - FM21DL000000001

PACK AIR FLOW REGULATION D/O (3)

SYSTEM DESCRIPTION

The system ensures:
- pack air flow regulation and shut-off,
- pack air flow measurement,
- ozone filtering.

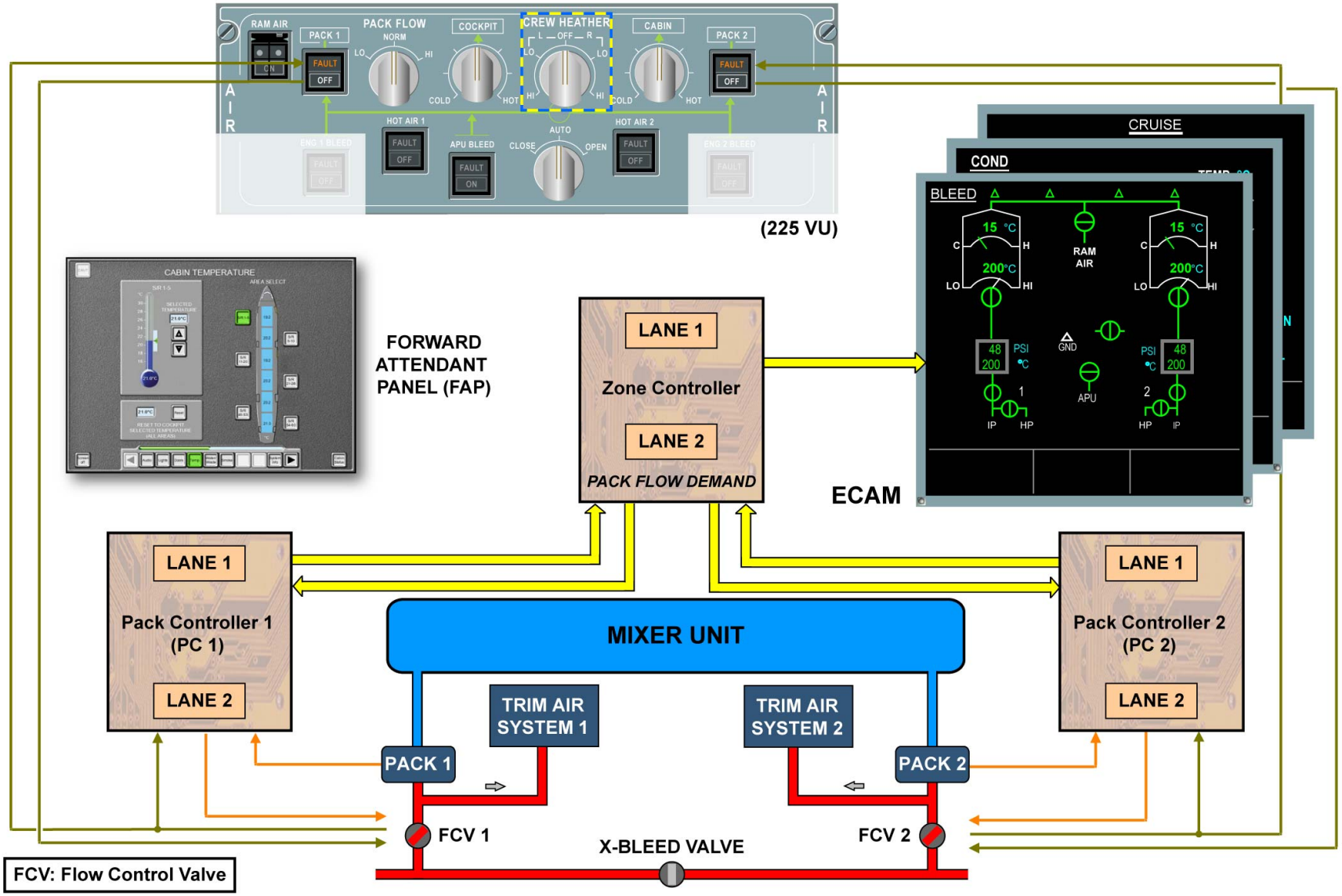

SYSTEM DESCRIPTION

G7508471 - G3NT1T0 - FM21D1AIRFLOW03

PACK AIR FLOW REGULATION D/O (3)

SYSTEM DESCRIPTION (continued)

FLOW CONTROL VALVE (FCV)

The Flow Control Valve (FCV) is a modulating and shut-off butterfly valve. It is controlled by the Pack Controller (PC). The FCV is pneumatically actuated and:
- electrically controlled through an electrical pressure regulator (normal mode),
- pneumatically controlled through a pneumatic pressure regulator (back-up mode).\
The electrical pressure regulator is fitted with a torque motor. The pneumatic pressure regulator is supplied directly with cabin pressure. The normal/back-up mode switching is ensured by a control solenoid. The shut-off function is ensured by an on/off solenoid. Two microswitches ensure the valve Fully Closed (FC)/Not Fully Closed (NFC) position detection. The FCV is fitted with a mechanical visual indicator and a locking screw for maintenance purposes.

SENSORS

Four different sensors are used for the actual pack airflow calculation:
- two flow sensors measure the differential pressure through the FCV,
- a pack inlet pressure sensor reads the air pressure upstream from the FCV,
- a bleed temperature sensor reads the air temperature upstream from the FCV.

OZONE CONVERTER

An ozone converter is fitted in the hot bleed air supply duct upstream from the FCV. The ozone converter removes the ozone from the air by catalytic effect.

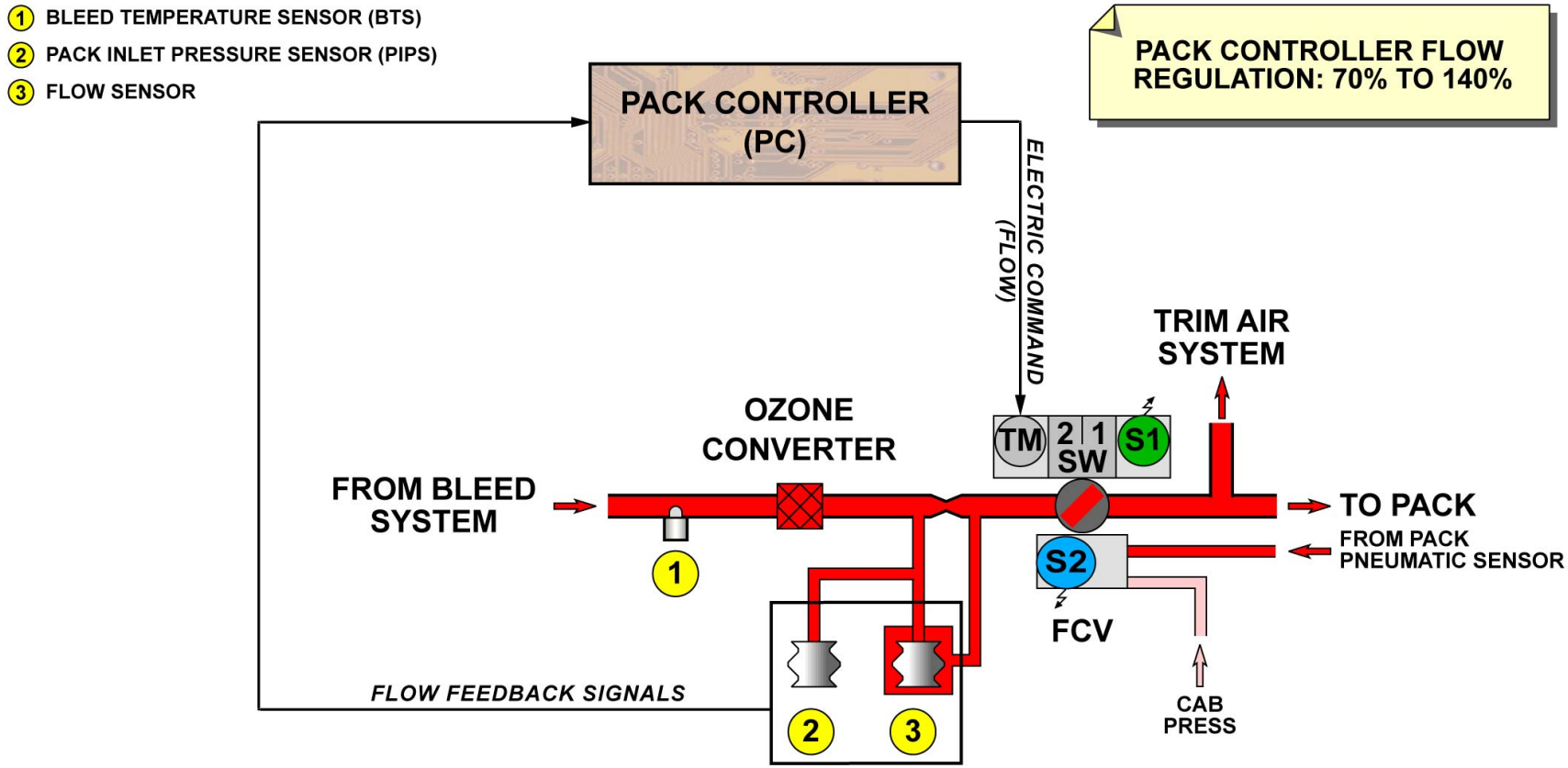

FCV	ENERGIZED ⚡	DE-ENERGIZED
S1 SOLENOID (ON/OFF COMMAND)	FCV CLOSED	FCV REGULATING
S2 SOLENOID (BACK-UP CONTROL)	FCV CONTROLED by PC	FCV IN PNEUMATIC MODE

SYSTEM DESCRIPTION - FLOW CONTROL VALVE (FCV) ... OZONE CONVERTER

G7508471 - G3NT1T0 - FM21D1AIRFLOW03

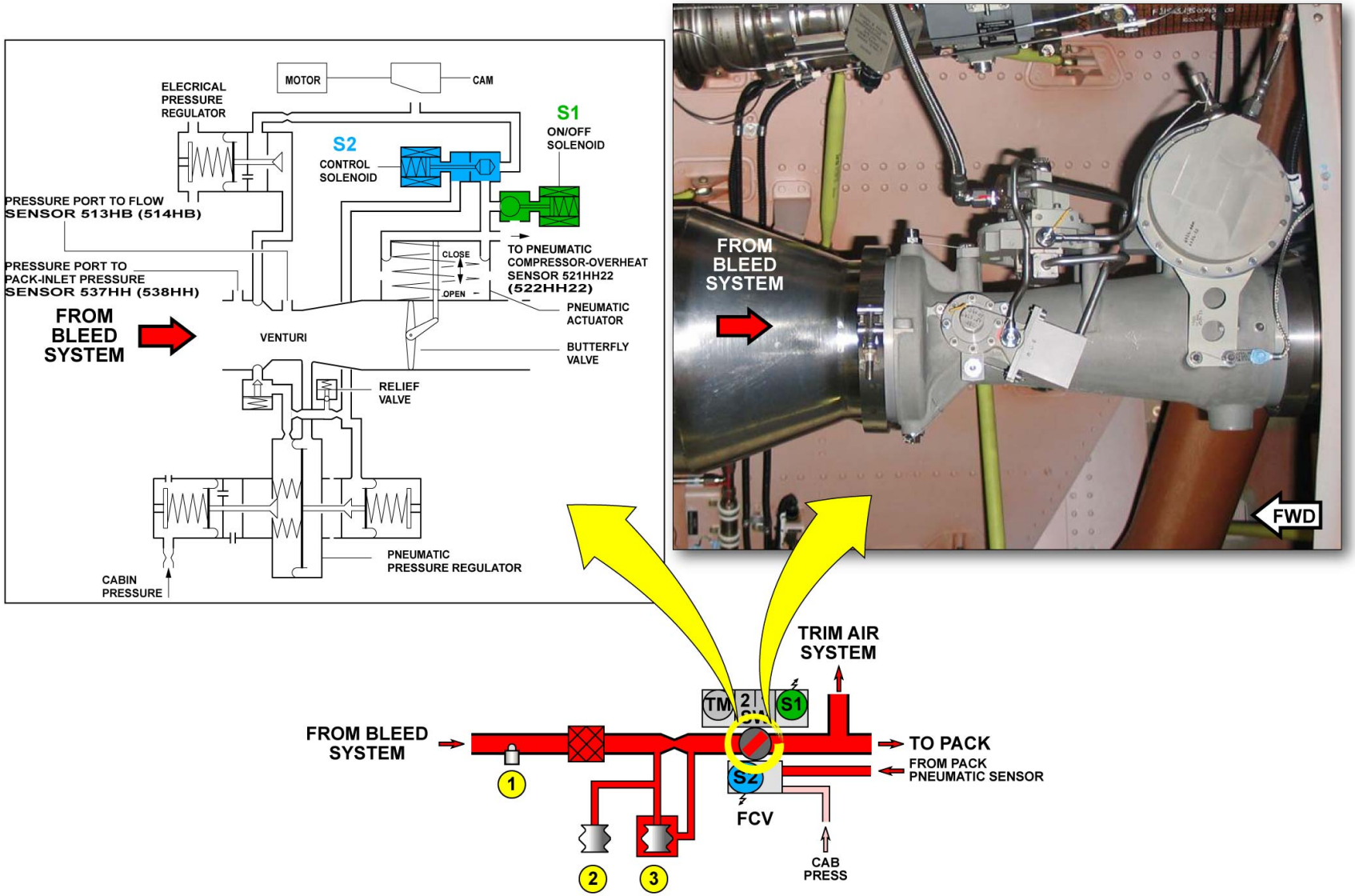

SYSTEM DESCRIPTION - FLOW CONTROL VALVE (FCV) ... OZONE CONVERTER

G7508471 - G3NT1T0 - FM21D1AIRFLOW03

This Page Intentionally Left Blank

PACK AIR FLOW REGULATION D/O (3)

PACK FLOW REGULATION

Each FCV has two different flow regulation modes. In this module we describe only the FCV 1 system. The normal mode operates as long as the control solenoid is energized by the PC. The pneumatic back-up mode takes over when the control solenoid is not energized.

NORMAL MODE

The PC controls the electrical pressure regulator through a torque motor. The PC compares the pack flow demand received from the ZC to the actual flow. The actual flow is calculated by the PC and based on:
- two differential pressure inputs,
- the bleed air temperature,
- the pack inlet pressure,
- the cabin altitude.

PNEUMATIC BACK-UP MODE

The pneumatic back-up mode operates if the control solenoid electrical power supply is lost or the electrical pressure regulator torque motor fails. The pneumatic pressure regulator regulates the flow to 125% and keeps it constant according to:
- a differential pressure measured within the FCV,
- a pneumatic cabin pressure input.

The FCVs pneumatically close if the pack inlet pressure drops below 5 PSI.

INDICATING

The FCV position, the actual flow and the pack flow demand target data for normal mode are transmitted to the EIS through the ZC. These indications are displayed on the ECAM BLEED page.

FCV SHUT-OFF

The FCV shut-off is ensured by the on/off solenoid. The FCV closes when the on/off solenoid is energized. The FCV flow regulation is enabled when the on/off solenoid is de-energized. A pack closure relay directly commands the on/off solenoid according to:
- the associated PACK P/BSW position,
- an engine start/relight condition,
- an engine fire condition,
- the DITCHING P/BSW position,
- the cabin and cargo doors status.

ON/OFF FUNCTION

FCV 1 closes when the PACK 1 P/BSW is set to OFF. FCV 2 closes when the PACK 2 P/BSW is set to OFF.

ENGINE START/RELIGHT

Each PC closes its associated FCV as soon as an engine start or relight sequence is initiated. EIVMU 1 transmits engine start data to PC 1 for control of FCV 1. EIVMU 2 transmits engine start data to PC 2 for control of FCV 2. The FCV opens at the end of the start sequence in flight or after a delay following the start sequence on ground. The EIVMU will not generate an FCV closure signal during an engine relight in flight with N2>50% (N3>50% for RR engine). Both FCVs close if an engine start occurs with the crossbleed valve in open position.

ENGINE FIRE

FCV 1 closes if ENGine 1 FIRE P/BSW is released out. FCV 2 closes if ENG 2 FIRE P/BSW is released out.

DITCHING

Both FCVs close as soon as the DITCHING P/BSW is set to ON. The ditching signal is transmitted to each pack close relay via a ditching relay.

DOORS NOT CLOSED AND LOCKED

The ZC checks the door status inputs after the first engine is started and continuously monitors the door status until the throttle lever are set to take-off power (flight phase 2). During flight phase 2, the PC will automatically close both FCVs to prevent fuselage pressurization if the door status is "doors not closed and locked". The PC will open both FCVs as soon as the door status becomes "doors closed and locked".
From flight phase 3, the latest door status monitored during phase 2 will be memorized and latched. The memorized door status will be reset and the actual door status monitoring resumed if at least throttle lever 2 or 3 is removed from the take-off power position and the A/C is on ground.

FCV POSITION DISAGREEMENT

A FAULT light comes on, on the PACK 1(2) P/BSW when the FCV 1(2) position disagrees with the commanded position. The fault light is triggered through an FCV 1(2) disagree relay. An associated ECAM warning message will be triggered on the EWD.

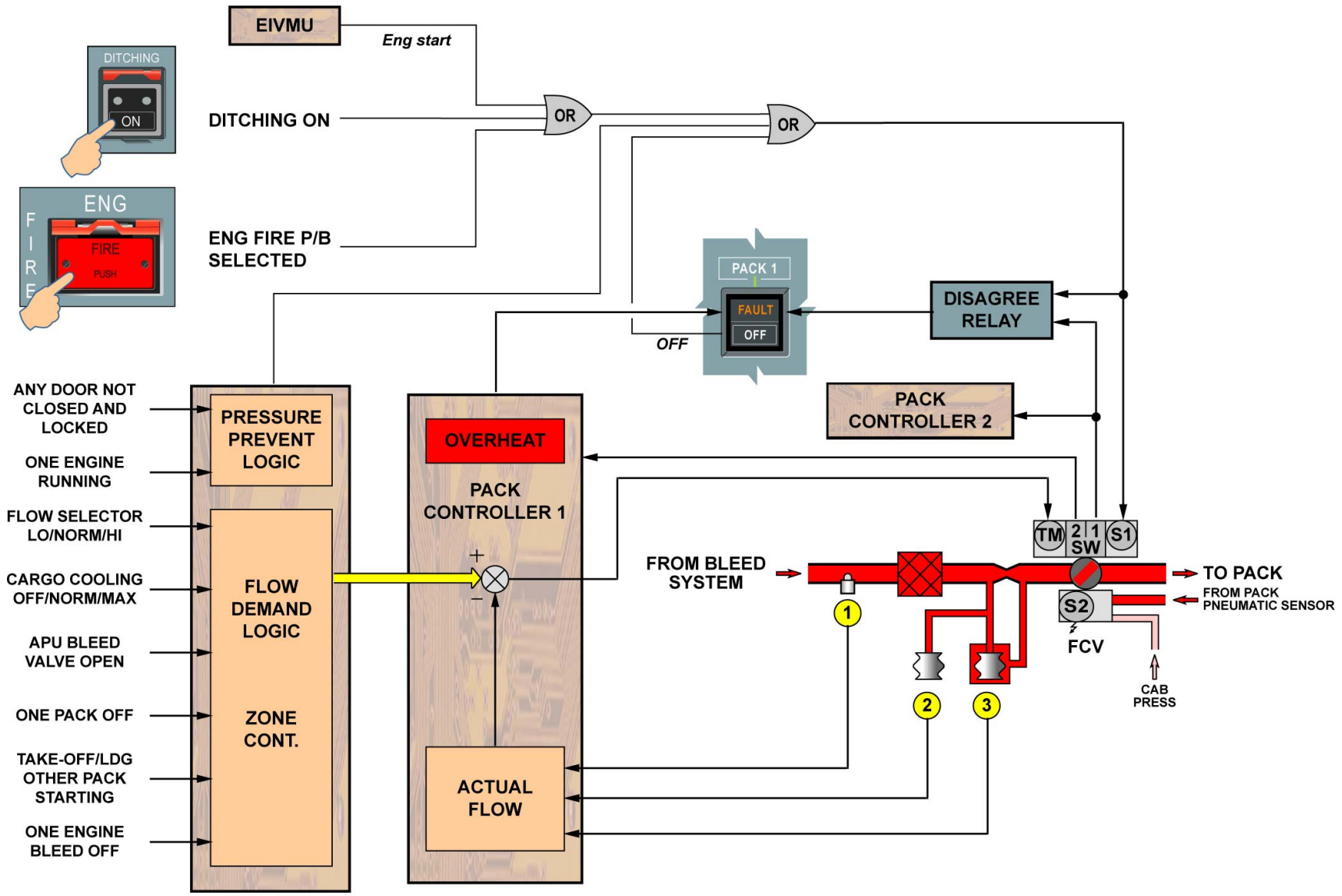

PACK FLOW REGULATION ... FCV POSITION DISAGREEMENT

G7508471 - G3NT1T0 - FM21D1AIRFLOW03

This Page Intentionally Left Blank

PACK AIR FLOW REGULATION D/O (3)

PACK FLOW DEMAND

The pack flow demand calculation is performed by the Zone Controller (ZC). It is used as a target value by each PC for controlling the FCVs. The pack flow demand basically depends on the AIR FLOW selector position. The pack flow demand is set to:
- 100% if the selector is in MAN position,
- 80% if the selector is in LO position.

The demand is variable if the selector is in NORM or HIGH position.

AIR MANAGEMENT

The air management function ensures a fuel consumption reduction without affecting passenger comfort. It calculates a pack flow demand based on:
- the NORM/HIGH AIR FLOW selector position,
- the cabin layout from the Cabin Intercommunication Data System (CIDS).

CARGO OFFSET

The pack flow demand is offset if optional cargo compartment heating or cooling systems are installed. The offset depends on:
- the FWD cargo cold air valve position, if installed,
- the aft cargo cold air valve position, if installed.

These positions are transmitted by the Ventilation Controller (VC).

LOWER DECK FACILITY OFFSET

The pack flow demand is also offset if an optional lower deck facility is installed. The offset value depends on the lower deck facility configuration transmitted by the CIDS.

ONE BLEED OFF

The pack flow demand is limited if both packs are operative and one engine bleed air system is off.

APU BLEED AIR SUPPLY

The pack flow demand is set to 123.5% if both packs are operative and the APU bleed valve is open.

FLOW INCREASE REQUEST

The pack flow demand is increased in order to maintain cabin pressurization. The demand comes from the CPCs.

TAKE-OFF/OPPOSITE PACK START

Each PC overrides the pack flow demand received from the ZC to prevent pack compressor overheat. Thus, pack flow demands are set to 80% during take-off or opposite pack starting sequence.

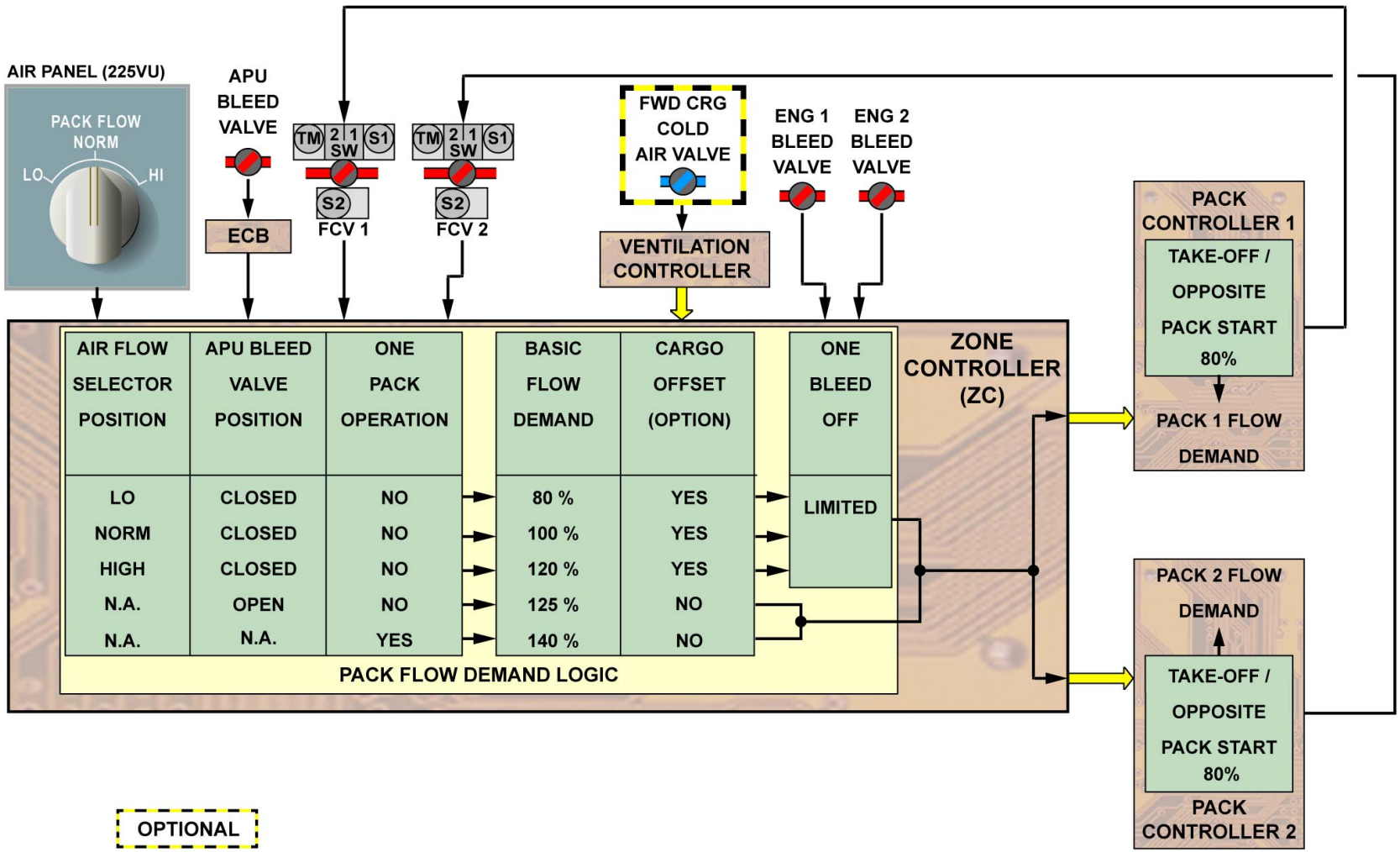

PACK FLOW DEMAND - AIR MANAGEMENT ... TAKE-OFF/OPPOSITE PACK START

G7508471 - G3NT1T0 - FM21D1AIRFLOW03

PACK AIR FLOW REGULATION D/O (3)

PACK FLOW DEMAND (continued)

ABNORMAL OPERATION: ZONE CONTROLLER FAILURE

In case of zone controller failure, the flow is set to 100% or 140% if single pack operation. The pack outlet temperature is set to 20 deg.C.

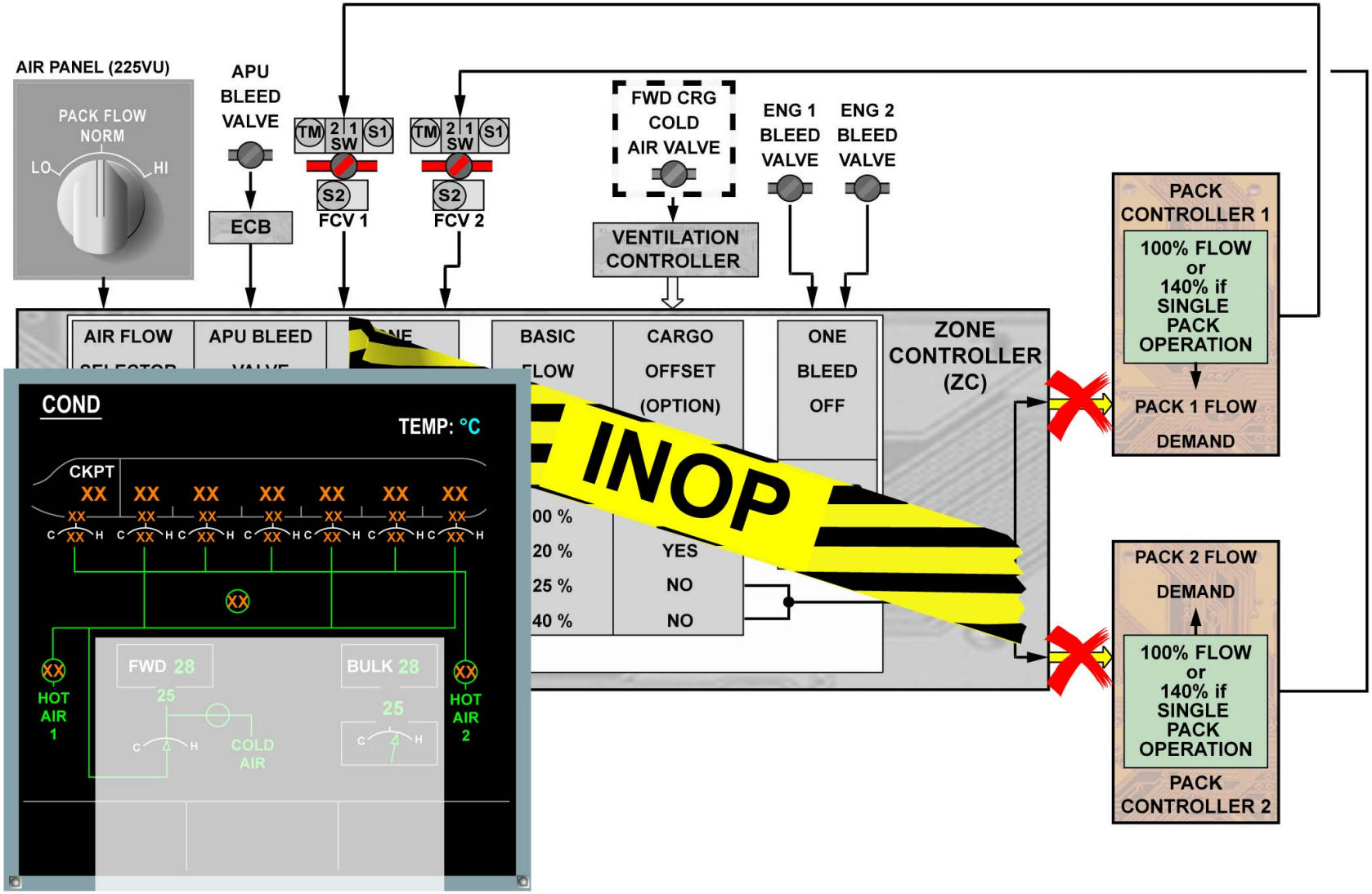

PACK FLOW DEMAND - ABNORMAL OPERATION: ZONE CONTROLLER FAILURE

G7508471 - G3NT1T0 - FM21D1AIRFLOW03

PACK AIR FLOW REGULATION D/O (3)

PACK FLOW DEMAND (continued)

ABNORMAL OPERATION: PACK CONTROLLER FAILURE

In case of pack controller failure, the Flow Control Valve operates pneumatically. The flow is set to 120 % of nominal flow

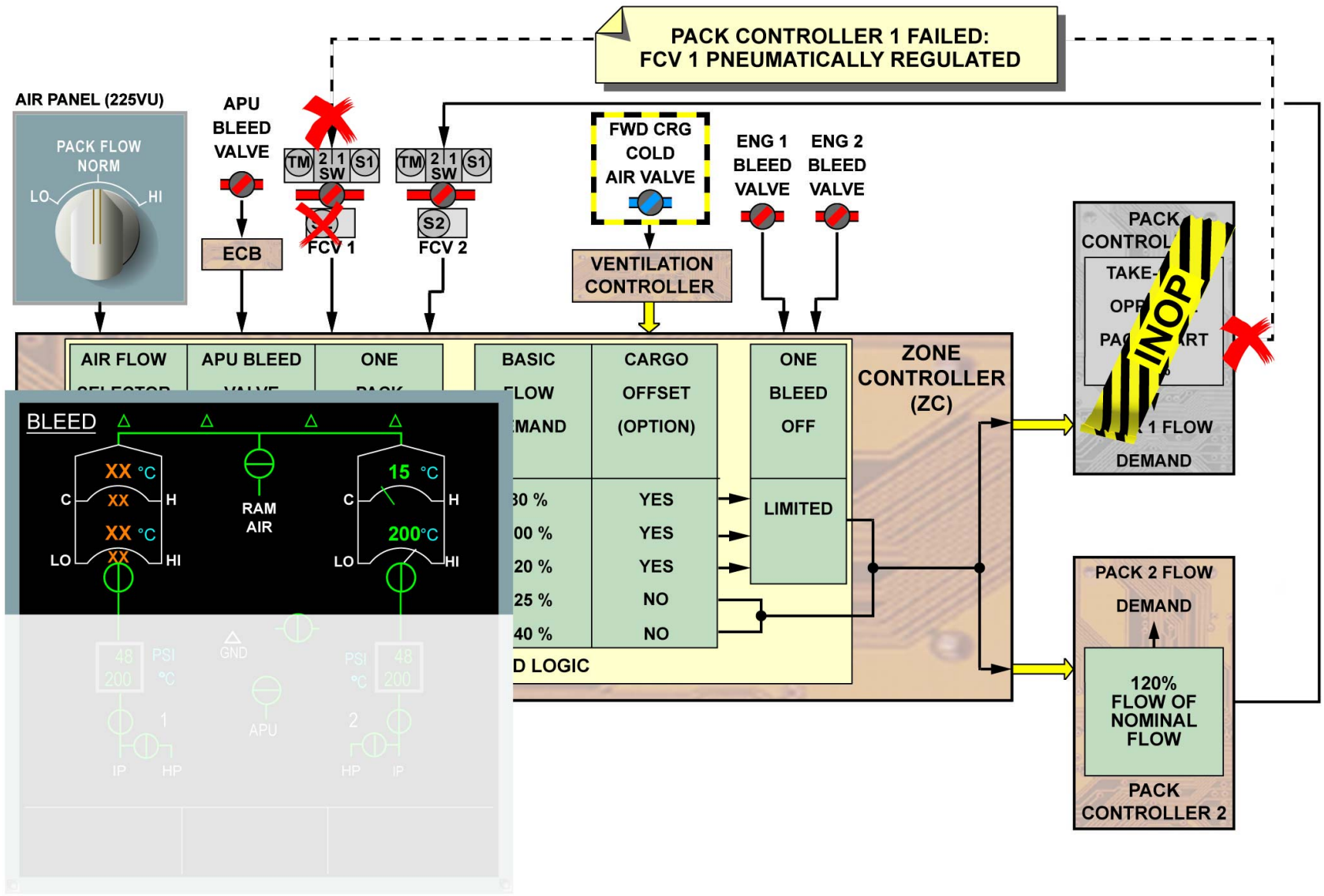

PACK FLOW DEMAND - ABNORMAL OPERATION: PACK CONTROLLER FAILURE

G7508471 - G3NT1T0 - FM21D1AIRFLOW03

PACK TEMPERATURE CONTROL D/O (3)

PACK OVERVIEW PRINCIPLE

A dedicated PC controls the pack air temperature.

SYSTEM ARCHITECTURE

The pack air temperature is controlled by:
- the Temperature Control Valve (TCV) for short-term regulation,
- the RAI and Ram Air Outlet (RAO) flaps for long-term regulation.

The TCV directly modulates the pack discharge temperature by adding hot air to the ACM outlet. The RAI and RAO flaps modulate the ram airflow through the ram air system. Electrical actuators actuate the flaps. During take-off and landing, the RAI flap fully closes to prevent ingestion of foreign matter. An anti-ice valve prevents ice build-up in the water extraction loop. The AIV pneumatically modulates hot bleed air supply to the ACM outlet in case of icing conditions.
In the event of ACM failure, the cooling is performed by the heat exchangers and the pack temperature control is achieved by means of ram air modulation and temperature control valve regulation.

SYSTEM CONTROLS

The PC electrically controls the TCV and the actuators according to:
- the pack temperature demand calculated by the ZC,
- the actual pack temperature.

The pack temperature demand calculation depends on the lowest temperature demand based on:
- the temperature selections on the AIR panel,
- the cabin area temperature adjustment on the Flight Attendant Panel (FAP) through the CIDS.

SYSTEM MONITORING

Each PC provides basic temperature and flow regulation of its associated pack. The PC contains two independent computer lanes, each of which is capable of performing all control and monitoring functions. One of these lanes is designated as being "active" while the other lane remains in a passive "hot-standby" mode. An automatic changer over occurs at the end of each flight or during the flight, if there is a failure in the active lane. If a fault occurs in both lane, active control will be passed to the lane with the least significant fault.

PACK CONTROLLER

Each Pack Controller (PC) contains two independent computer lanes, each of which is able to perform all control, monitoring and BITE functions. One of these lanes is designated as being "active" while the other lane remains in a passive "hot-standby" mode. An automatic changeover occurs at the end of each flight or during the flight, if there is a failure in the active lane. Should a fault exist in both lanes, active control will be passed to the lane with the least significant fault. A covered RS232 test equipment connector is fitted to the controller front.

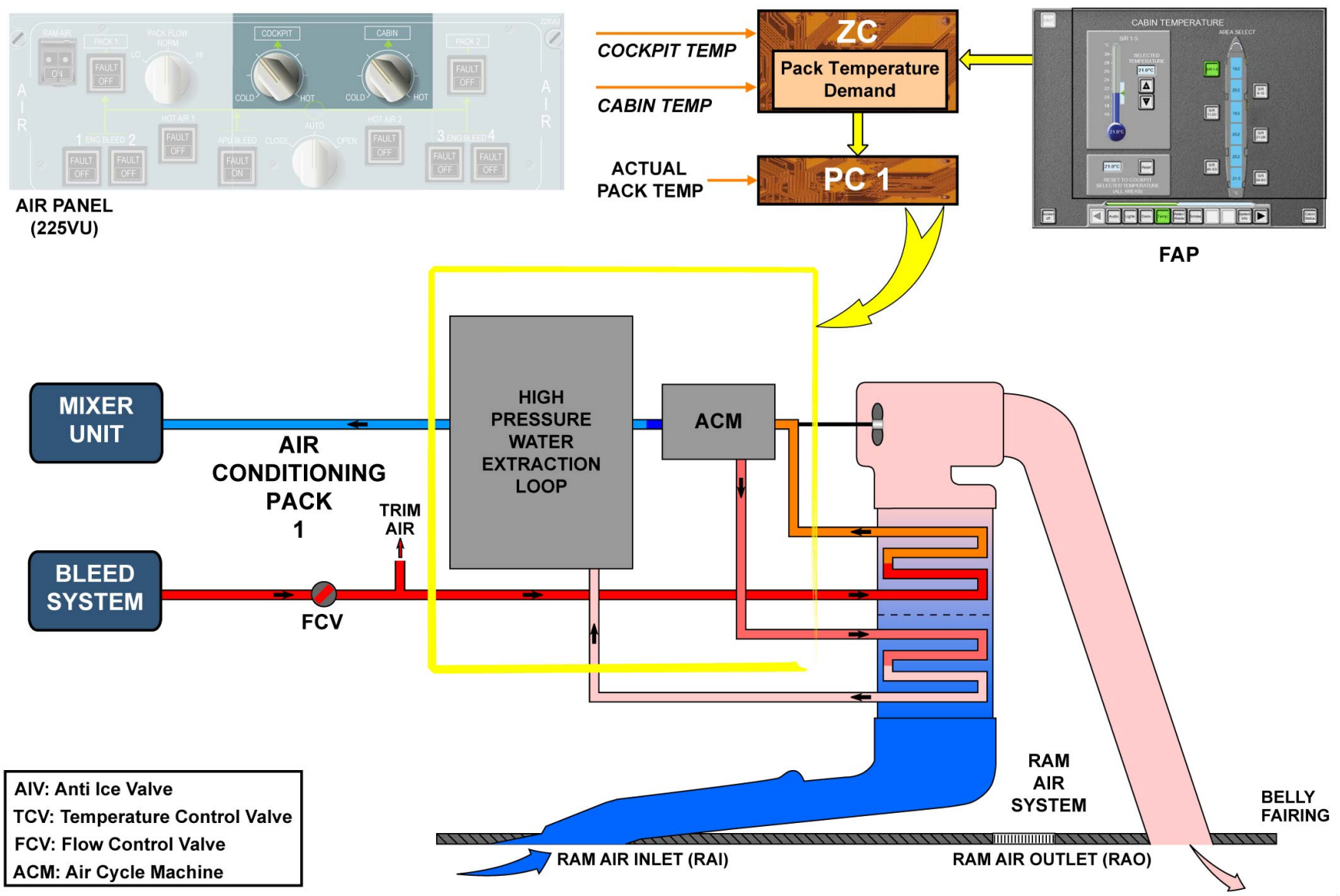

PACK OVERVIEW PRINCIPLE - SYSTEM ARCHITECTURE ... PACK CONTROLLER

G7508471 - G3NT1T0 - FM21D3AIRPCTL03

PACK TEMPERATURE CONTROL D/O (3)

SYSTEM DESCRIPTION

The pack temperature regulation system ensures:
- pack discharge temperature regulation,
- ice build-up protection,
- overheat protection,
- main pack parameters monitoring.

PACK COMPONENT D/O: COOLING/WATER EXTRACTION

The air cooling system decreases the temperature of the hot bleed air from the pneumatic system. It also reduces the quantity of water in the hot bleed air.
The water extractors are installed between the condensers and the reheaters. They remove the water that condenses in the condensers. The condensed water and the water from the split duct drains to the applicable water injectors.

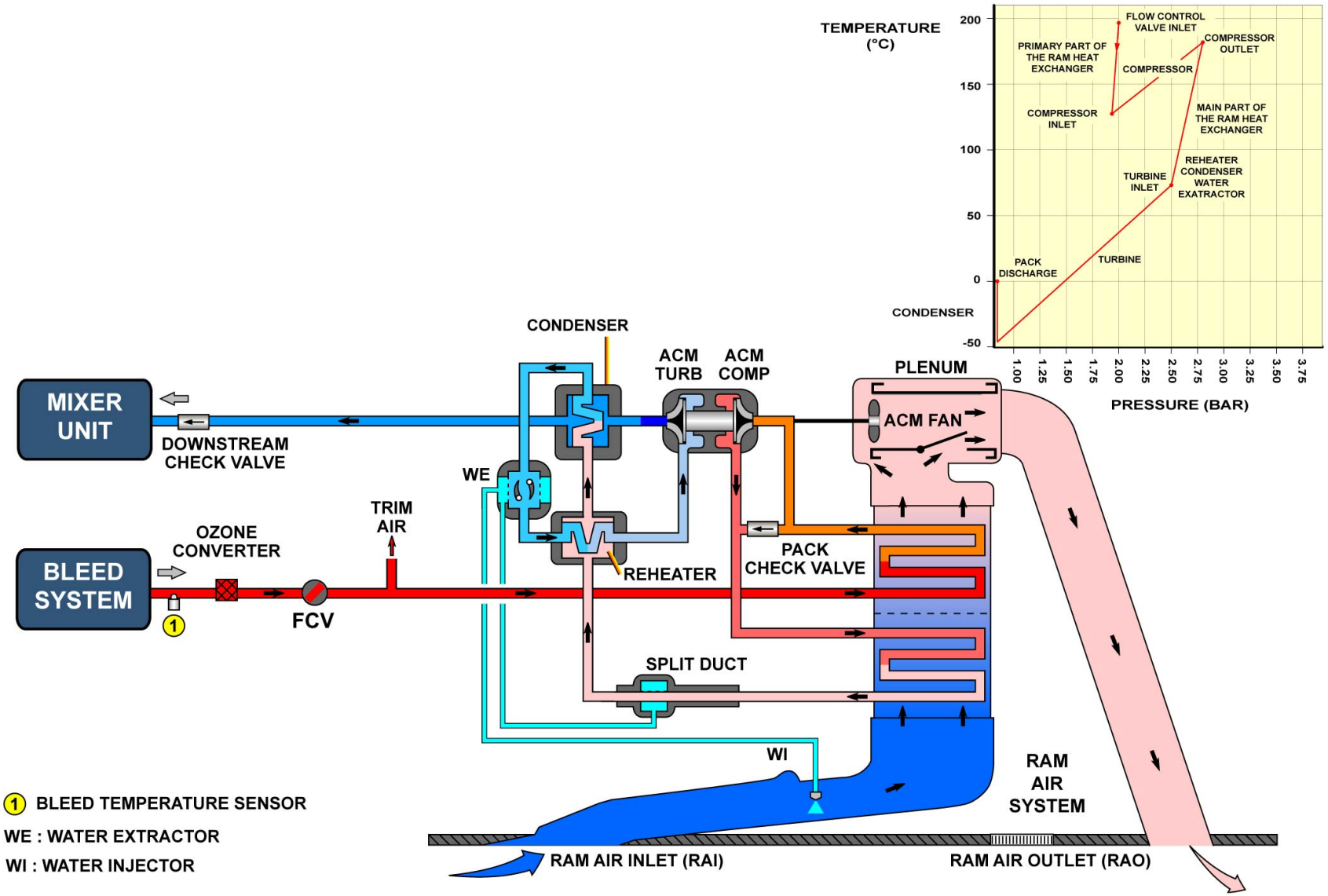

SYSTEM DESCRIPTION & PACK COMPONENT D/O: COOLING/WATER EXTRACTION

G7508471 - G3NT1T0 - FM21D3AIRPCTL03

PACK TEMPERATURE CONTROL D/O (3)

PACK COMPONENT D/O: HEATING SYSTEM

AIR INLET/OUTLET FLAP ACTUATORS

Each actuator is mechanically driven by an electrical motor controlled by the pack controller. Each actuator is fitted with:
- 2 potentiometers for actual position feedback,
- 2 limit switches to prevent damage in case of potentiometer failure.

TEMPERATURE CONTROL VALVE

The temperature control valve is a modulating butterfly valve. The temperature control valve is mechanically actuated by a stepper motor and electrically controlled by the pack controller. The temperature control valve is fitted with potentiometers installed at the end of its shaft which send electrical resistance value in relation to the valve position. The lower end of the valve shaft has an indication-mark showing the position of the valve.

ANTI-ICE VALVE

The anti-ice valve is a modulating butterfly valve. The anti-ice valve is pneumatically actuated and:
- pneumatically controlled through high and low pressure delta P servos when operating in the anti-ice mode,
- pneumatically controlled through a pneumatic temperature sensor when operating in the temperature regulation pneumatic mode.

The delta P servos measure the differential pressure across the condenser for high and low pressure airflow paths. The temperature regulation pneumatic mode is enabled by a solenoid that is electrically controlled by the pack controller. There is a manual lever used for observing the butterfly valve position and manually operating it.

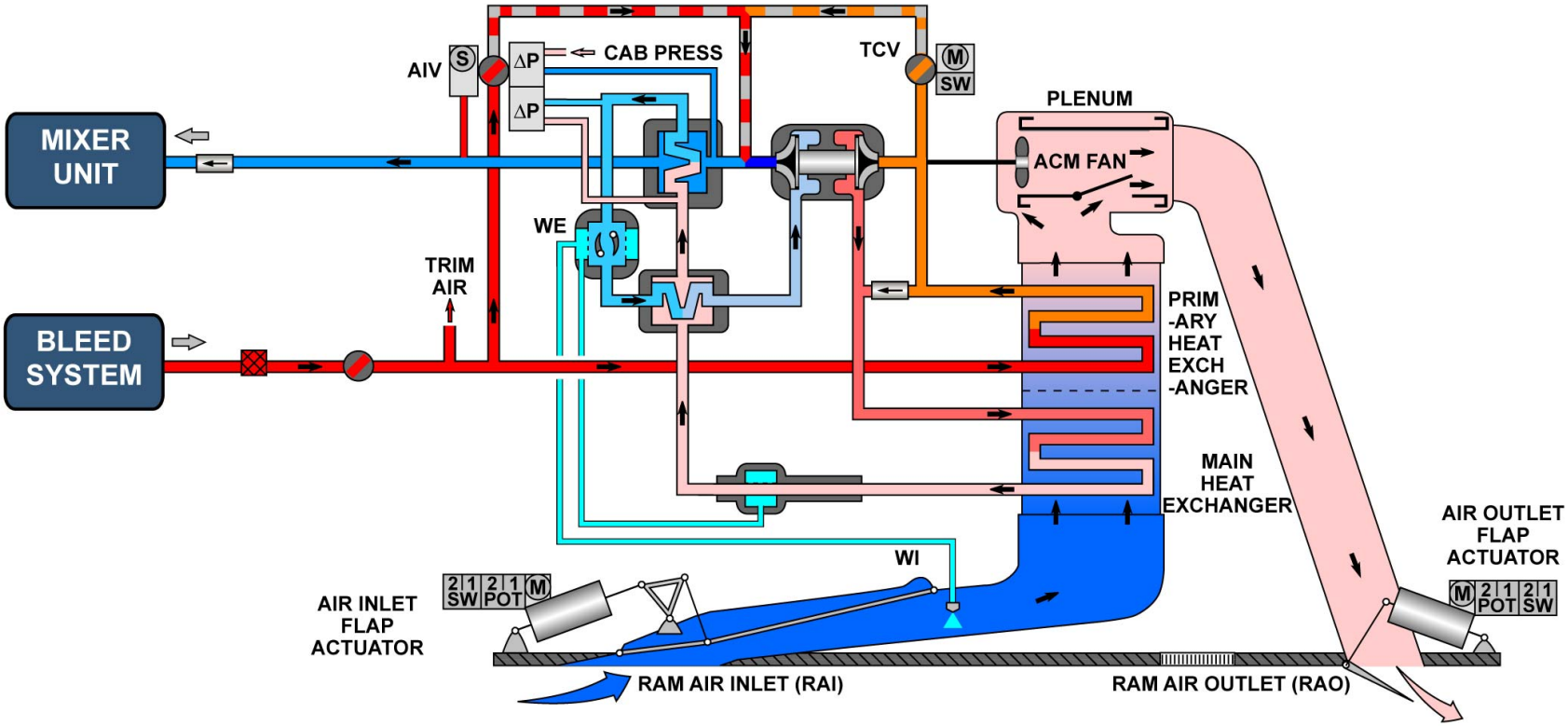

PACK COMPONENT D/O: HEATING SYSTEM - AIR INLET/OUTLET FLAP ACTUATORS ... ANTI-ICE VALVE

G7508471 - G3NT1T0 - FM21D3AIRPCTL03

PACK TEMPERATURE CONTROL D/O (3)

SENSORS

TEMPERATURE SENSORS

There are five double element sensing thermistor-type temperature sensors installed throughout the pack which provide temperature feedback to the pack controller for temperature control, monitoring and indicating.
The temperature sensors include:
- a compressor inlet temperature sensor located upstream from the compressor (4),
- a compressor discharge temperature sensor located downstream from the compressor (6),
- a heat exchanger temperature sensor located near the split duct (7),
- a pack temperature sensor located near the water extractor (8),
- a pack discharge temperature sensor located downstream from the turbine (10).

PNEUMATIC SENSORS

There are two pneumatic sensors of clapper type. A pneumatic compressor overheat sensor (5) is installed at the compressor outlet and it is connected to the Flow Control Valve (FCV). It controls the FCV to protect the pack in case of compressor outlet overheat. The pneumatic temperature sensor (9) installed at the pack outlet is connected to the anti-ice valve. It controls the anti-ice valve to regulate the pack discharge temperature in case of normal temperature regulation failure.

1. BLEED TEMPERATURE SENSOR (BTS)
2. PACK INLET PRESSURE SENSOR (PIPS)
3. FLOW SENSOR
4. COMPRESSOR INLET TEMPERATURE SENSOR (CIS)
5. COMPRESSOR PNEUMATIC OVERHEAT SENSOR (CPNOH)
6. COMPRESSOR DISCHARGE TEMPERATURE SENSOR (CDS)
7. HEAT EXCHANGER TEMPERATURE SENSOR (HOS)
8. PACK TEMPERATURE SENSOR (PTS)
9. PNEUMATIC TEMPERATURE SENSOR (PNTS)
10. PACK DISCHARGE TEMPERATURE SENSOR (PDS)

electic sensor
pneumatic sensor

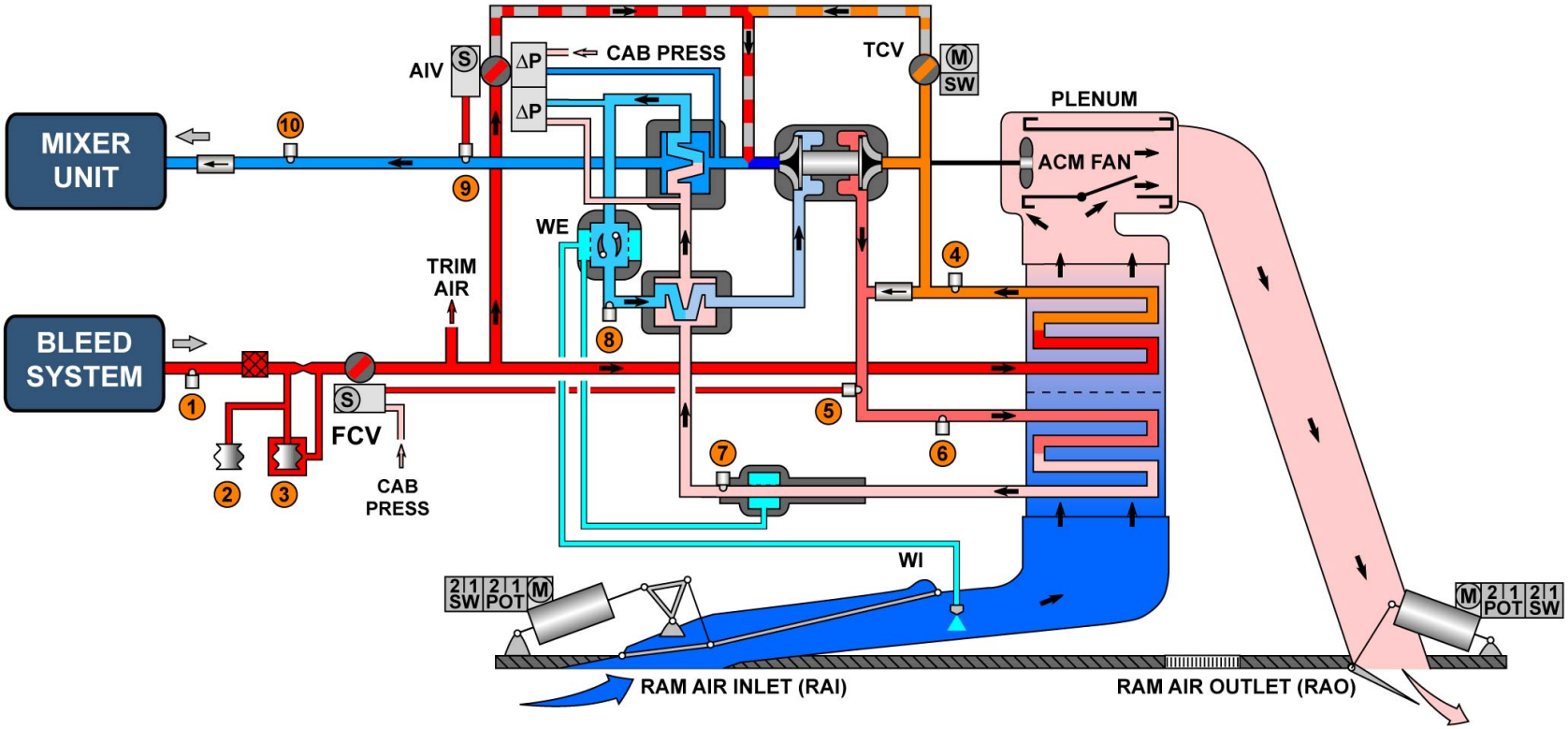

SENSORS - TEMPERATURE SENSORS & PNEUMATIC SENSORS

PACK TEMPERATURE CONTROL D/O (3)

PACK TEMPERATURE REGULATION: NORMAL MODE

The normal mode is based on the pack temperature demand, which corresponds to the lowest zone temperature demand. The pack temperature demand is computed by the zone controller and limited to a low value by the pack controller. The low value depends on the aircraft altitude.
To prevent ice formation in the High Pressure (HP) section of the pack, the temperature is kept above freezing until humidity no longer exists in the bleed air.
The pack controller sets the pack temperature demand to 20°C as default value, if there is no demand signal sent by the zone controller. The limited pack temperature demand is then compared to the actual temperature measured by the pack temperature sensor (8) or, if failed, by the pack discharge temperature sensor (10).The pack discharge temperature data is transmitted to the EIS through the zone controller and displayed on the ECAM BLEED page.
The temperature error signal is processed through a temperature control valve control logic and used to:
- control the temperature control valve stepper motor,
- calculate the temperature control valve actual position.

The temperature control valve actual position determination is based on a step counting principle, after a self-adjustment during a power-up test.
The temperature regulation through the temperature control valve is used for short-term regulation. For long-term regulation, the ram air doors slowly take over from the temperature control valve by modulating the ram airflow while the temperature control valve is driven back to an optimized position. This enables the system to:
- satisfy pack flow requirements, and
- minimize ram air drag.

Under normal conditions, the air outlet flap actuator control is based on the temperature control valve control signal. The air inlet flap actuator is slaved to the actual air outlet flap actuator position. Potentiometers are used to get actual position feedback. Under specific aircraft operating phases, fixed ram air door position signals are used as reference signals.

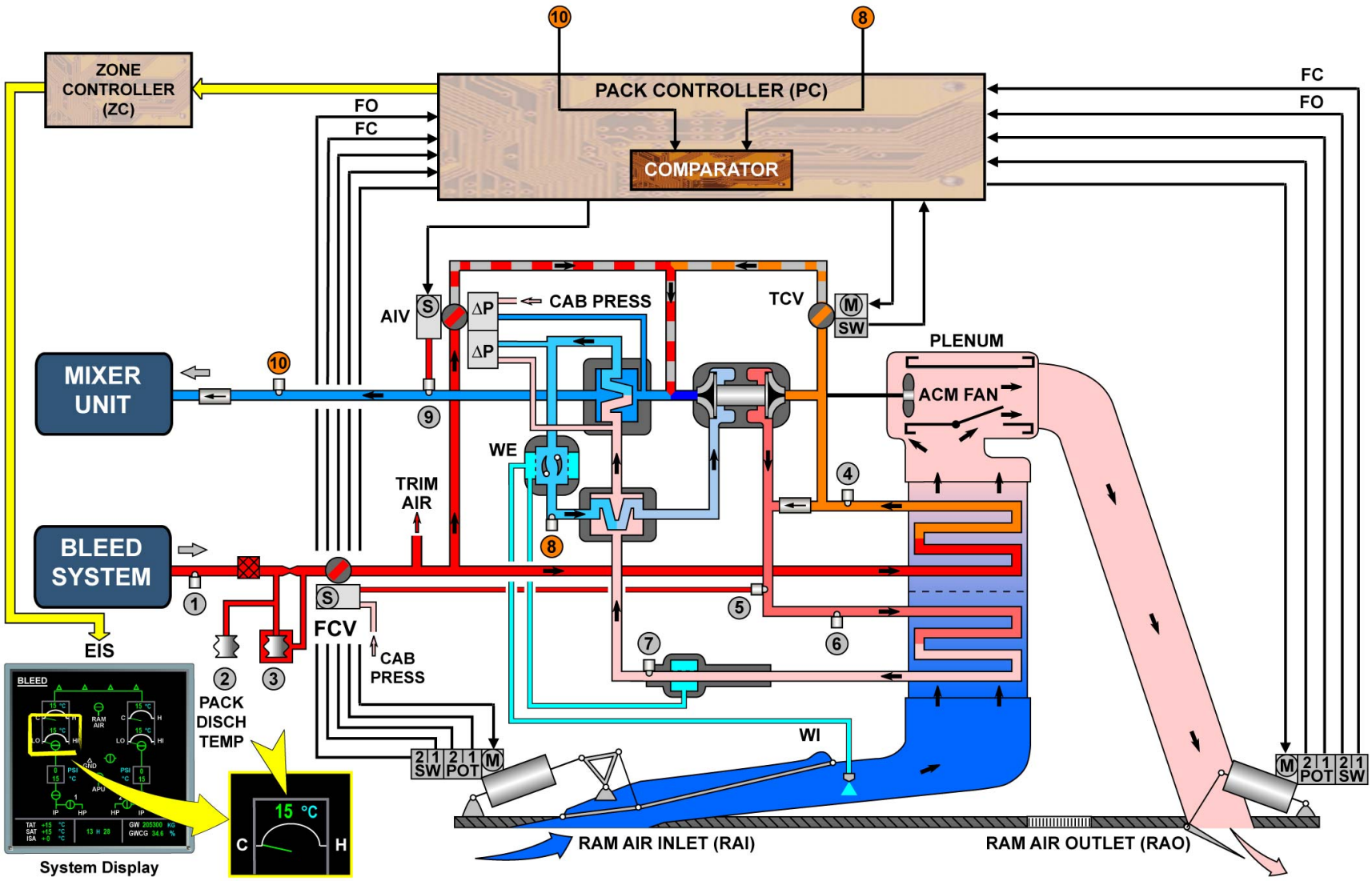

PACK TEMPERATURE REGULATION: NORMAL MODE

G7508471 - G3NT1T0 - FM21D3AIRPCTL03

PACK TEMPERATURE CONTROL D/O (3)

ABNORMAL/DEGRADED OPERATION

The pack control system is able to:
- prevent ice build-up in condenser,
- prevent compressor overheat,
- detect compressor overheat,
- detect pack discharge overheat.

CONDENSER ICE BUILD-UP PREVENTION

If there is ice build-up in the condenser, the differential pressure sensed across it increases proportionally. The anti-ice valve delta P servos open the Anti-Ice Valve. Hot air supplied to the turbine outlet melts the ice in the condenser and causes the differential pressure sensed across the condenser to decrease. The anti-ice function is also operative during the temperature regulation pneumatic back-up mode.

PACK OVERHEAT (ACM COMPRESSOR OVERHEAT PROTECTION)

COMPRESSOR OVERHEAT PREVENTION

The pack controller continuously monitors high temperatures in the vicinity of the compressor through:
- the compressor discharge temperature sensor (6),and
- the compressor inlet temperature sensor (4) if the compressor discharge temperature sensor (6) is inoperative.

Either of these temperatures is displayed on the ECAM BLEED page.
To prevent compressor overheat, the pack controller processes a signal via a compressor overheat regulator as soon as the compressor discharge temperature rises above 170°C. This signal overrides the normal temperature regulation and drives the ram air doors to a more open position. This increases the ram airflow passing through the ram heat exchanger and the compressor discharge temperature is decreased.
If the overheat condition persists, the pneumatic compressor overheat sensor (5) protects the pack by progressively closing the FCV. The FCV starts to close at 235°C and it is fully closed at 260°C.

COMPRESSOR OVERHEAT DETECTION

The pack controller will automatically close the FCV on ground, if the compressor discharge temperature (6) rises above 260°C. A compressor overheat condition will also trigger:
- a FAULT light on the associated PACK P/BSW,
- an ECAM warning message on the EWD,
- an amber compressor discharge temperature indication on the ECAM BLEED page.

In flight, the crew will be requested to manually set the associated PACK P/BSW to OFF. The FAULT light will disappear as soon as:
- the related FCV is fully closed, and
- the compressor discharge temperature drops below 180°C.

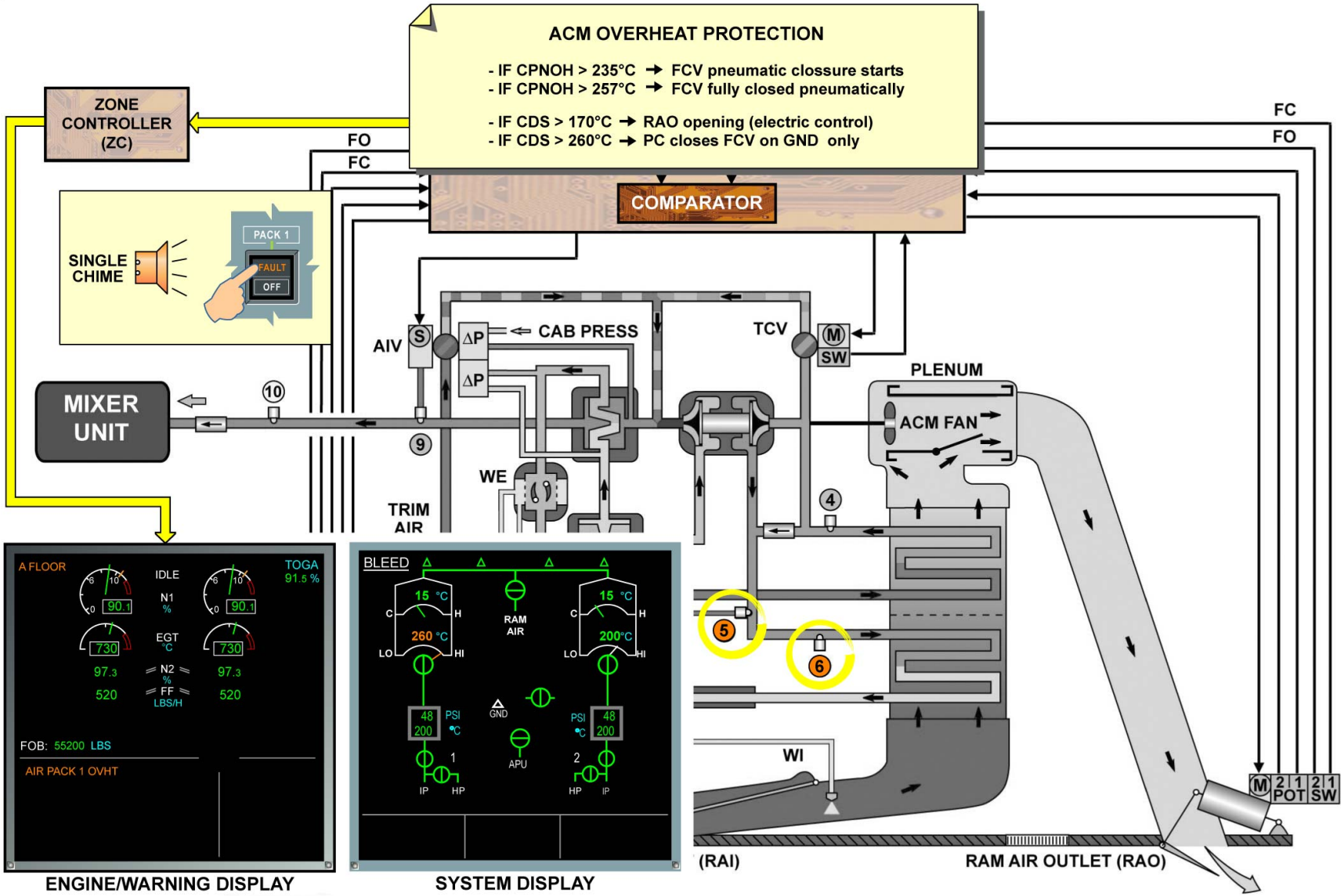

ABNORMAL/DEGRADED OPERATION & PACK OVERHEAT (ACM COMPRESSOR OVERHEAT PROTECTION)

PACK TEMPERATURE CONTROL D/O (3)

PACK OVERHEAT (PACK DISCHARGE)

PACK DISCHARGE OVERHEAT DETECTION

A pack discharge overheat condition is set as soon as the pack discharge temperature (10) rises above 95°C.
It will trigger:
- a FAULT light on the associated PACK P/BSW,
- an ECAM warning message on the EWD,
- an amber pack discharge temperature indication on the ECAM BLEED page.

The crew will be requested to manually set the associated PACK P/BSW to OFF. The FAULT light will disappear as soon as:
- the related FCV is fully closed, and
- the pack discharge temperature drops below 60°C.

PACK OVERHEAT PROTECTION ON GROUND

On ground only, the PCs ensure packs overheat protection in case the packs are running without any crew in the cockpit. The PC closes the associated FCV if the following conditions occur:
- compressor overheat or pack discharge overheat, and
- no FCV electrical closure command, and
- aircraft is on ground .

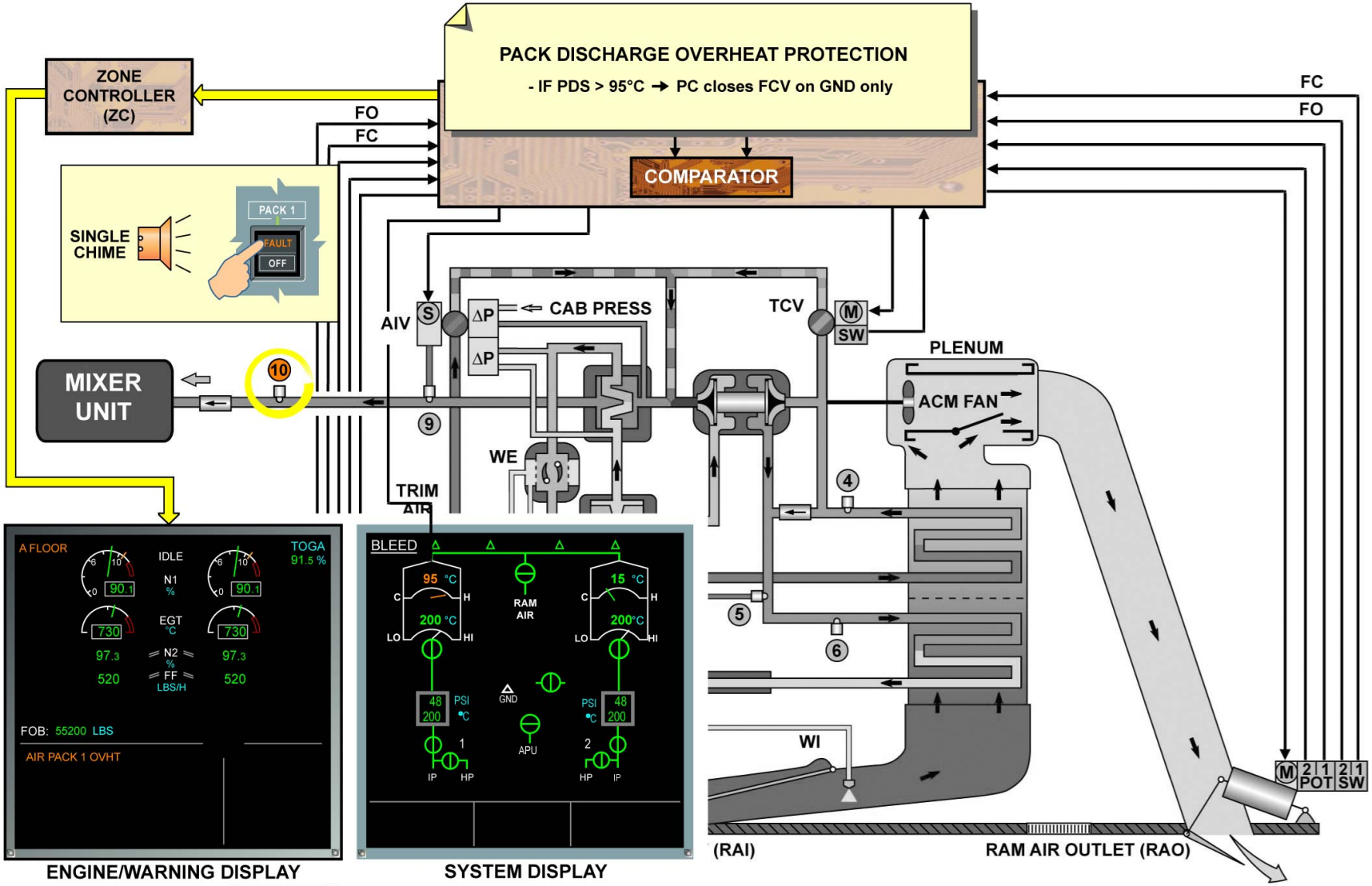

PACK OVERHEAT (PACK DISCHARGE) - PACK DISCHARGE OVERHEAT DETECTION & PACK OVERHEAT PROTECTION ON GROUND

G7508471 - G3NT1T0 - FM21D3AIRPCTL03

PACK TEMPERATURE CONTROL D/O (3)

PACK PNEUMATIC MODE

The pneumatic back-up mode operates if there is:
- a pack controller failure,
- a pack controller power supply loss,
- a temperature control valve failure.

When the anti-ice valve solenoid is de-energized. The pneumatic temperature sensor (9) modulates the anti-ice valve position in order to control the pack discharge temperature to approximately 11°C. The ram air doors are set to fixed positions depending on the failure.

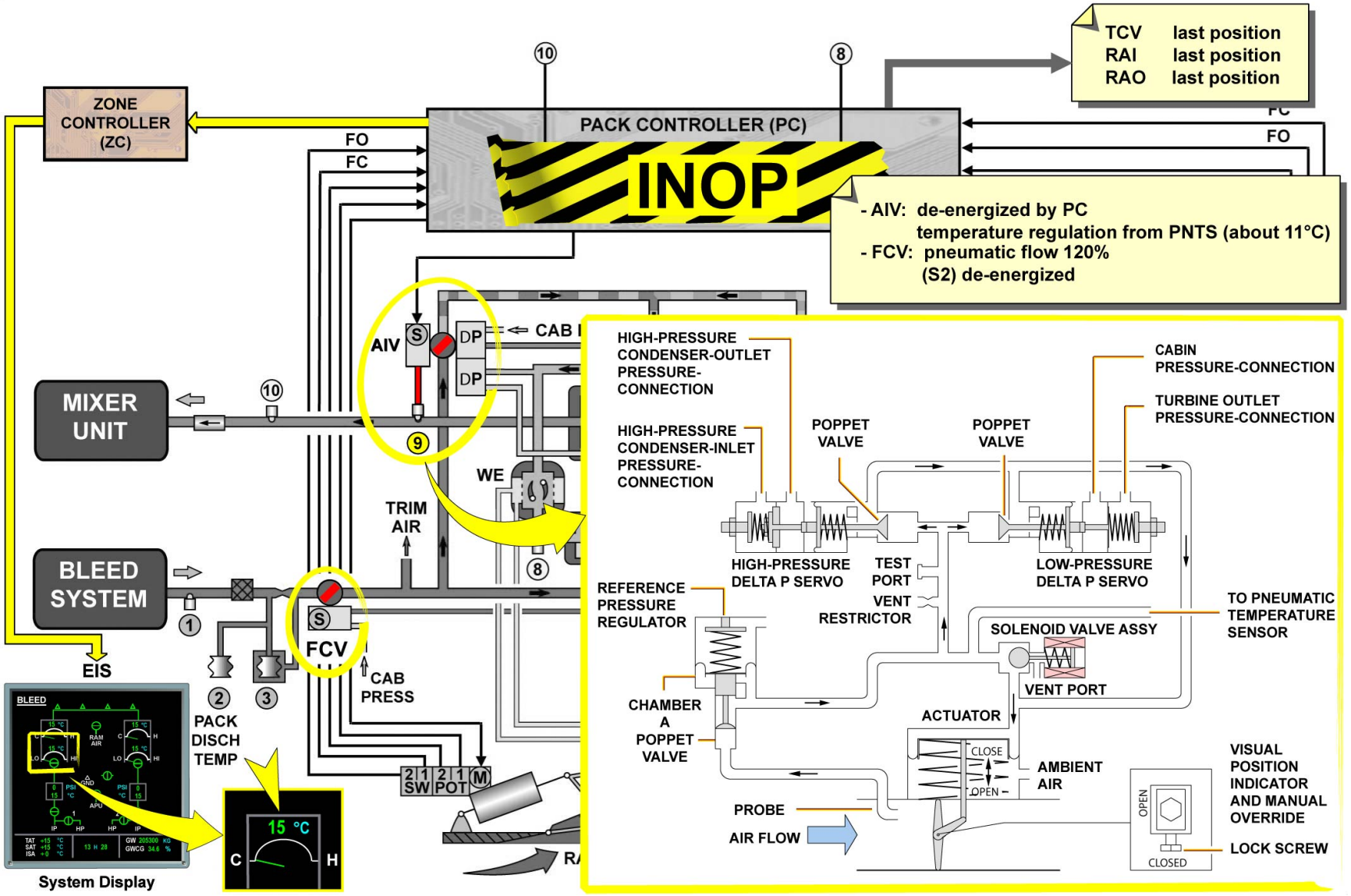

PACK PNEUMATIC MODE

G7508471 - G3NT1T0 - FM21D3AIRPCTL03

PACK TEMPERATURE CONTROL D/O (3)

ACM SEIZURE (PACK IN BYPASS MODE)

An air cycle machine seizure is detected when the temperature difference between the Compressor inlet temperature sensor (4) and the Compressor discharge temperature sensor (6) is less than 12deg. The pack operates in pure heat exchanger mode, the HP water extraction loop is operative but it has a limited effect on the water extraction process. The normal pack temperature regulation is kept, however it is only based on the use of the pack discharge temperature sensor (10) instead of the pack temperature sensor (8). When the pack operates in heat exchanger mode, ram air door closure is not accomplished during landing phase. Due to the air cycle machine design, air passes through the air cycle machine and water extraction loop as in normal operation. The compressor is bypassed through the pack check valve only if there is not enough bleed air pressure. The air cycle machine seizure status is transmitted to the EIS through the zone controller and displayed on the ECAM BLEED page.

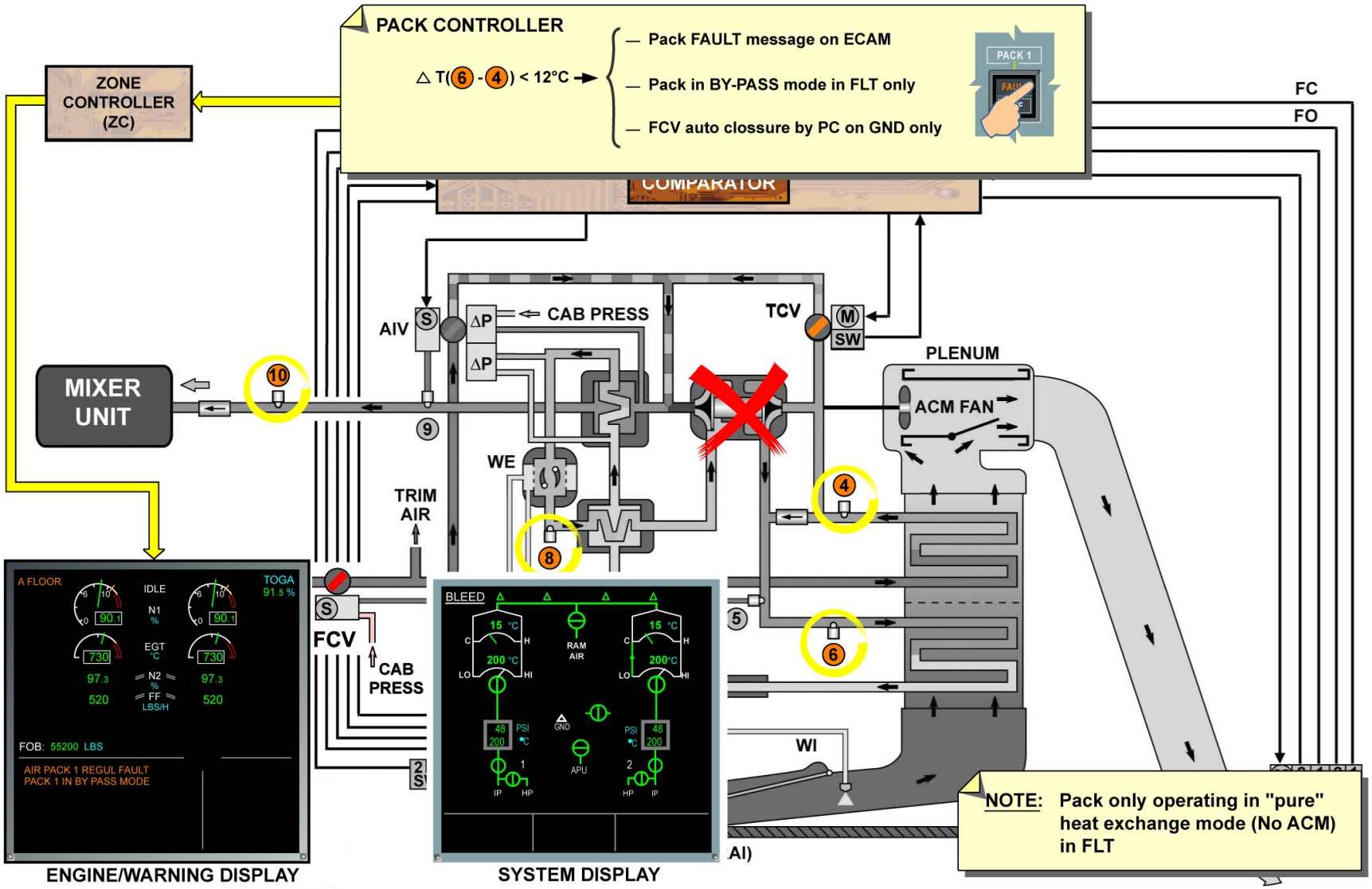

ACM SEIZURE (PACK IN BYPASS MODE)

PACK TEMPERATURE CONTROL D/O (3)

PACK HEAT EXCHANGER CONTAMINATION (ABNORMAL)

Although the ram heat exchanger is designed to minimize contamination, a long-term ingestion of dust could lead to a pack performance loss. Thus, the ram heat exchanger is automatically trend-monitored in order to detect a start of contamination. In order to start the trend monitoring, the pack controller checks the prerequisite conditions. The aircraft must be on ground with the APU and the pack ON. If the conditions are fulfilled, the pack controller checks the stability of the following data:
- the bleed temperature (1),
- the Total Air Temperature (TAT),
- the pack inlet pressure (2),
- the heat exchanger temperature (7).

The data is recorded once it is stabilized and the trend monitoring will accomplished. The outlet temperature of the main part of the ram heat exchanger is extrapolated with the bleed temperature, the TAT and the pack inlet pressure, and compared to the actual heat exchanger temperature.
The pack controller stores the temperature error (delta T) and associated flight leg data in its Electrically Eraseable Programmable Read Only Memory (EEPROM) as soon as a new flight leg starts. The memory has a storage capacity of up to 65 flight legs and can be reset from a Central Maintenance System (CMS) menu page though the zone controller.
A new average temperature error is then calculated with the last 32 flight legs. The pack controller triggers a message on the CMS if the average value rises above 15°C.

G7508471 - G3NT1T0 - FM21D3AIRPCTL03

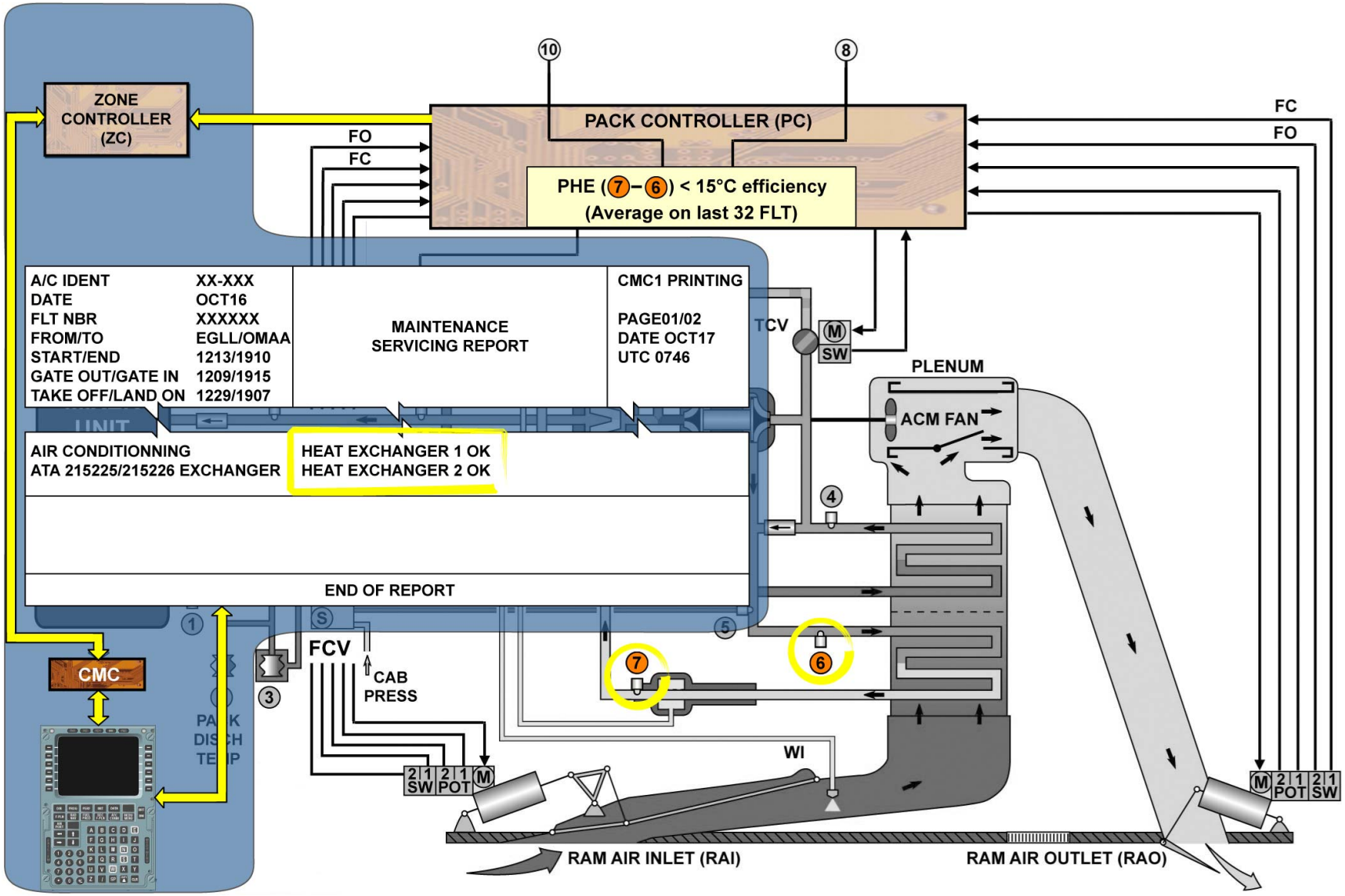

PACK HEAT EXCHANGER CONTAMINATION (ABNORMAL)

G7508471 - G3NT1T0 - FM21D3AIRPCTL03

EMERGENCY RAM AIR INLET D/O (3)

GENERAL

The A/C is equipped with one emergency ram air inlet flap located at the lower left-hand belly fairing of the fuselage. It shares the same duct as the low pressure ground connections.

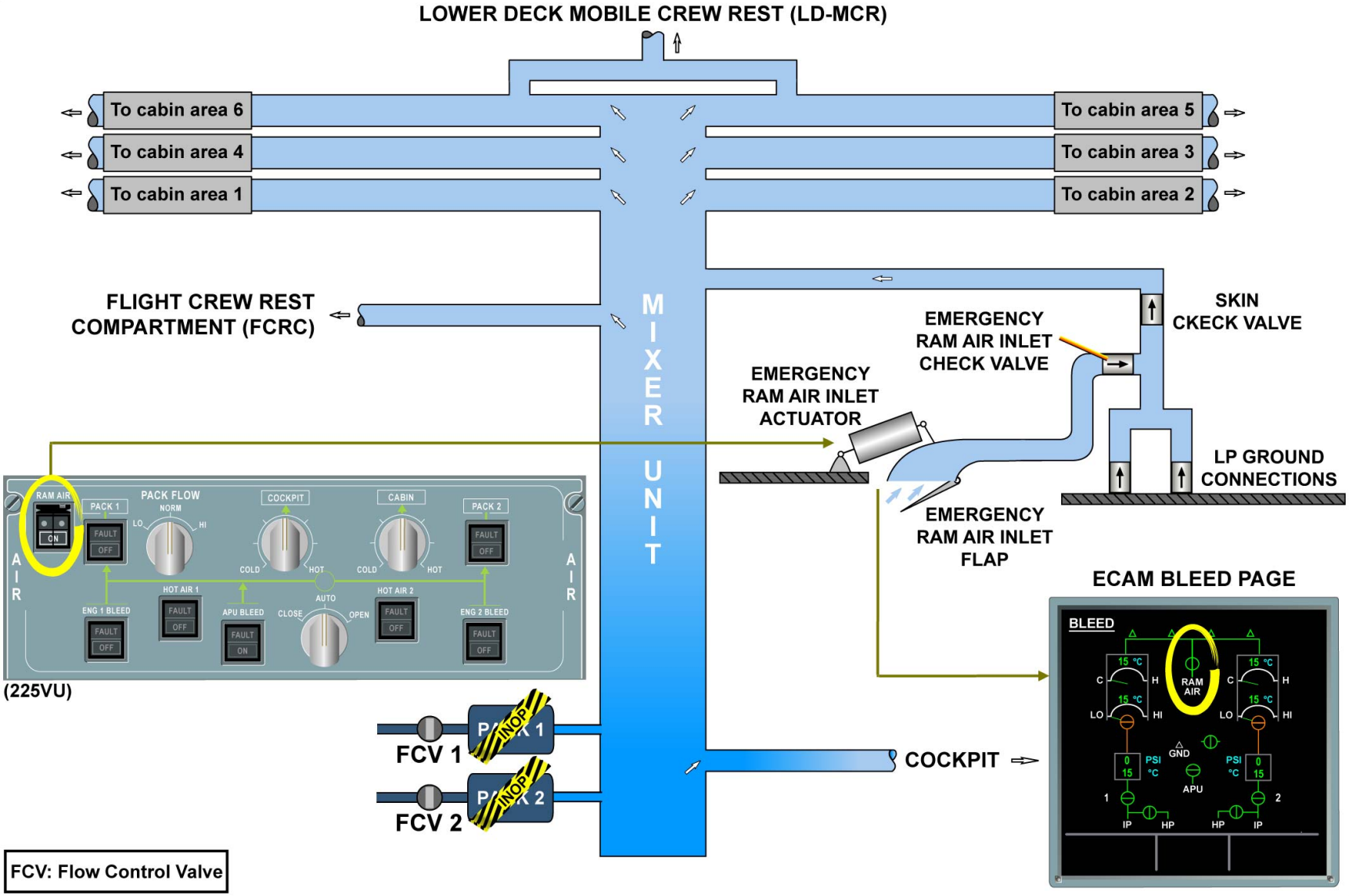
LOWER DECK MOBILE CREW REST (LD-MCR)
To cabin area 6
To cabin area 4
To cabin area 1
To cabin area 5
To cabin area 3
To cabin area 2
FLIGHT CREW REST COMPARTMENT (FCRC)
MIXER UNIT
SKIN CKECK VALVE
EMERGENCY RAM AIR INLET CHECK VALVE
EMERGENCY RAM AIR INLET ACTUATOR
LP GROUND CONNECTIONS
EMERGENCY RAM AIR INLET FLAP
ECAM BLEED PAGE
RAM AIR
PACK 1
PACK FLOW
NORM
LO
HI
COCKPIT
CABIN
PACK 2
FAULT
OFF
ON
COLD
HOT
AIR
HOT AIR 1
HOT AIR 2
ENG 1 BLEED
APU BLEED
CLOSE
AUTO
OPEN
ENG 2 BLEED
(225VU)
FCV 1
FCV 2
INOP
COCKPIT
BLEED
15 °C
C
H
RAM AIR
GND
PSI °C
APU
IP
HP
FCV: Flow Control Valve

GENERAL

EMERGENCY RAM AIR INLET D/O (3)

OPERATION

The emergency ram air inlet flap can be opened for A/C ventilation in case of complete loss of the operation of the two air conditioning packs.

OPENING

To open the emergency ram air inlet, lift the guard and set the ram air pushbutton switch to ON. If ditching is not selected ON, a signal is sent to the emergency ram air inlet actuator and the emergency ram air inlet allows the external airflow to enter.
A signal is also sent to the Cabin Pressure Controller (CPC) and if the altitude of the A/C is less than 10.000 ft and the difference of pressure between the pressure in the fuselage and the external pressure (P) is less than 1 PSI, the outflow valves open half way.

CLOSING

To close the emergency ram air inlet lift the guard and select the ram air pushbutton off. The outflow valves close as necessary to maintain cabin pressurization. Another signal is sent to the emergency ram air inlet actuator and the emergency ram air inlet closes.
The emergency ram air inlet closes automatically when the DITCHING pushbutton is set to ON.

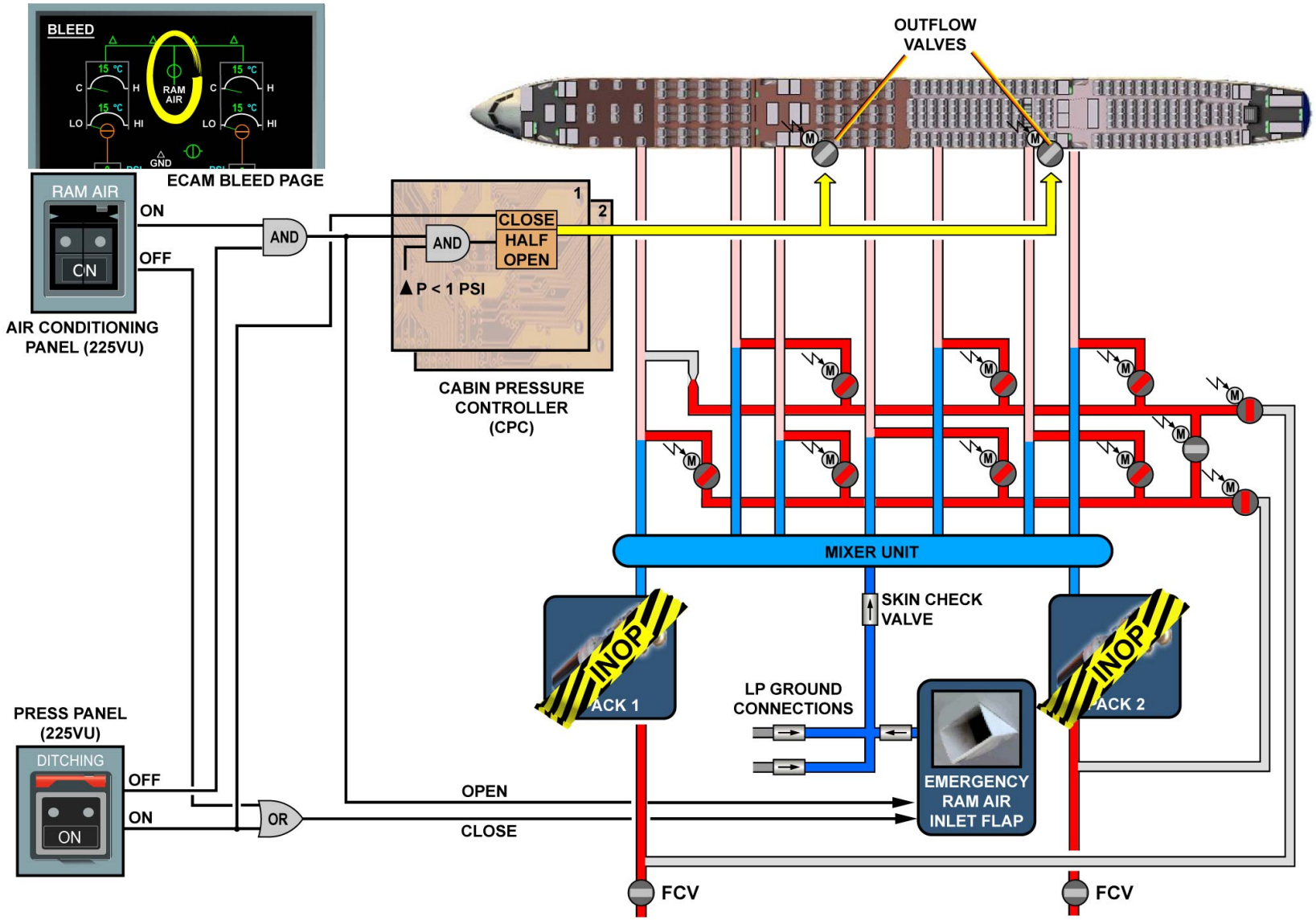

OPERATION - OPENING & CLOSING

G7508471 - G3NT1T0 - FM21D4F21TL0102

COCKPIT/CABIN AIR TEMPERATURE CONTROL D/O (3)

SYSTEM DESCRIPTION

The system does the:
- cockpit/cabin temperature control and monitoring,
- zone component monitoring,
- abnormal/degraded operation handling,
- calculation of demands to other A/C systems.

G7508471 - G3NT1T0 - FM21D5AIRCCTL03

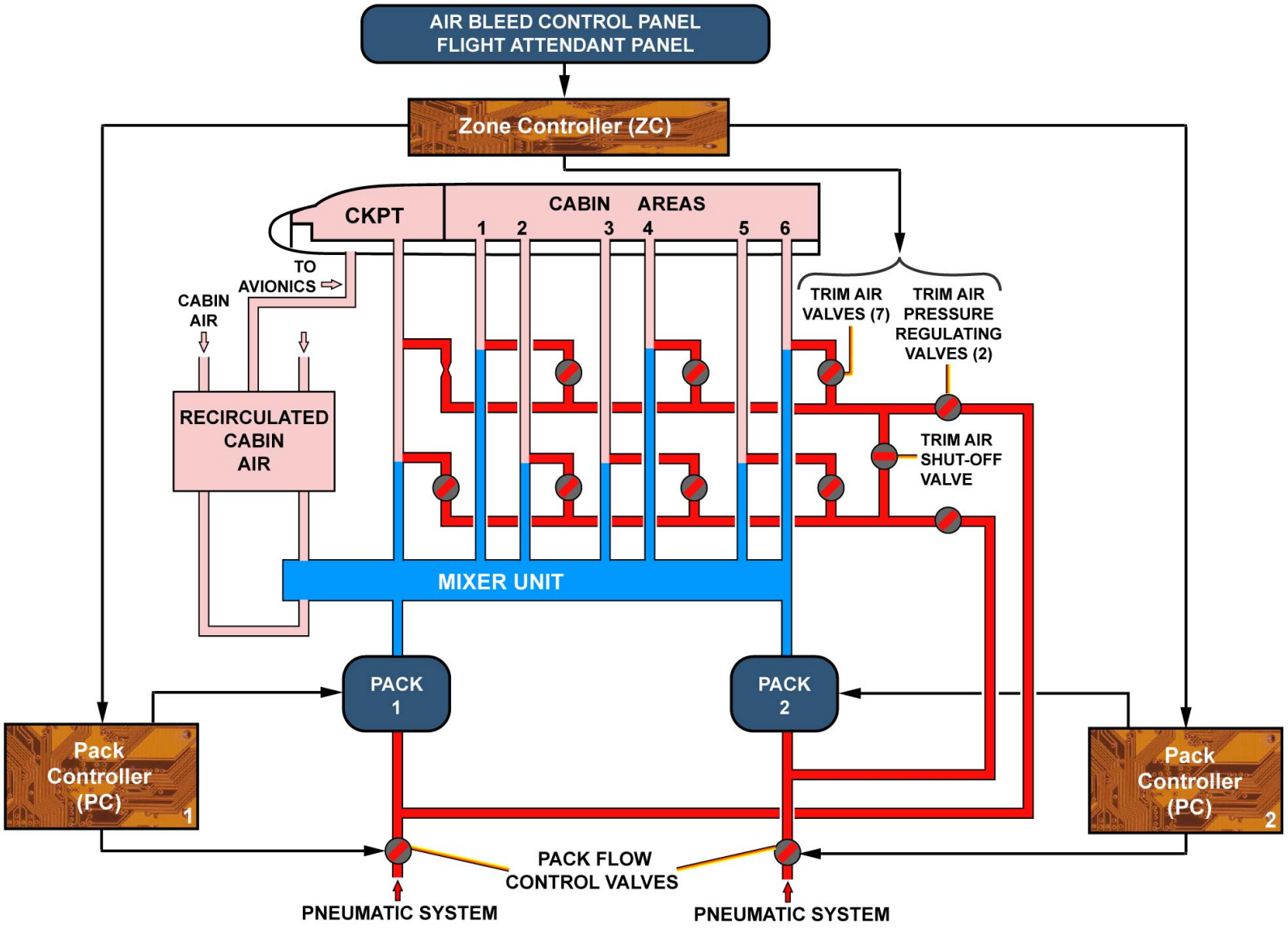

SYSTEM DESCRIPTION

G7508471 - G3NT1T0 - FM21D5AIRCCTL03

COCKPIT/CABIN AIR TEMPERATURE CONTROL D/O (3)

SYSTEM DESCRIPTION (continued)

ZONE CONTROLLER

The Zone Controller (ZC) contains two independent computer lanes, each of which is able to do all control, monitoring and BITE functions. One lane is designated as being "active" while the other lane remains in a passive "hot-standby" mode. An automatic changeover occurs at the end of each flight or during the flight, if there is a failure in the active lane. If a fault exists in both lanes, active control will be sent to the lane with the least significant fault. The ZC provisions are defined through pin programming.

TRIM AIR PRESSURE REGULATING VALVES (TAPRVs)

Two Trim Air Pressure Regulating Valves (TAPRVs), and each valve is a pressure regulating and shut-off butterfly valve. There is one TAPRV per trim air system. Each valve has:
- a pneumatic actuator, spring-loaded closed,
- a solenoid for the shut-off function,
- a double limit switch for Fully Closed (FC) / Not Fully Closed (NFC) position detection.

The valve is failsafe closed. A manual lever shows the valve position and makes manual overriding possible.

TRIM AIR SHUT-OFF VALVE (TASOV)

The Trim Air Shut-Off Valve is a shut-off butterfly valve. It is mechanically actuated by a 28V DC motor and electrically controlled from the ZC. The valve has two positions and has two limit switches for FC / Fully Open (FO) position detection. The valve has a thermal overheat protection. A manual lever shows the valve position and makes manual overriding possible.

TRIM AIR VALVES (TAVs)

The Trim Air Valves (TAVs) are modulating butterfly valves. There is one trim air valve per each of the 6 cabin areas and one for the cockpit. All valves are interchangeable. Each valve is mechanically actuated by a stepper motor and electrically controlled from the ZC. The trim air valve has a limit switch for FC / NFC position detection. A manual lever shows the valve position and makes manual overriding possible.

HOT AIR PRESSURE SWITCHES

There is one hot air pressure switch (1) per trim air system. It has a diaphragm, a disk spring and a microswitch. The two hot air pressure switches are interchangeable.

MIXER UNIT/DUCT TEMPERATURE SENSORS

There is one duct temperature sensor per each of the 6 cabin areas and one for the cockpit (3). They give duct temperature feedback to the ZC for duct temperature control, monitoring and indicating. There is also one temperature sensor installed on the mixer unit (2). It gives a mixer unit temperature feedback to the ZC for pack temperature demand calculation. All sensors are double element-sensing units of the thermistor type. All mixer unit and duct temperature sensors are interchangeable.

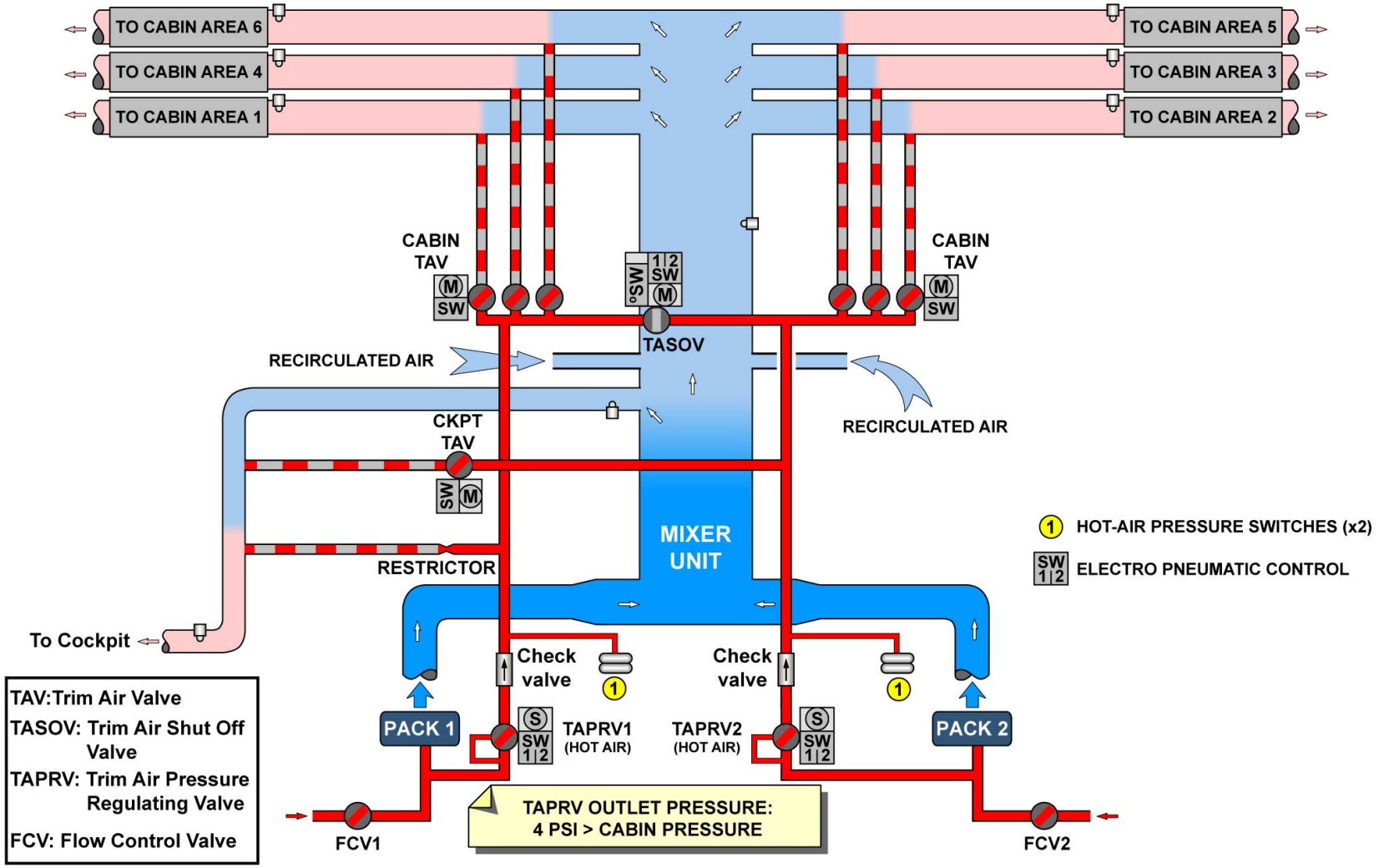

SYSTEM DESCRIPTION - ZONE CONTROLLER ... MIXER UNIT/DUCT TEMPERATURE SENSORS

G7508471 - G3NT1T0 - FM21D5AIRCCTL03

COCKPIT/CABIN AIR TEMPERATURE CONTROL D/O (3)

HOT AIR SUPPLY NORMAL OPERATION

The TAPRVs 1 and 2 supply pressure-regulated hot air to the TAVs for fine temperature adjustment. The two trim air systems can be interconnected through the TASOV installed on the hot air manifold. Each TAPRV has a hot air pressure regulation function and a hot air supply shut-off function.
The ZC opens TAPRVs 1 and 2 (solenoid energized), if:
- hot air is available, TAPRVs close when solenoids de-energized,
- HOT AIR P/BSW is set to ON, and the solenoid is energized; if pneumatic pressure is available, TAPRV opens and starts regulating the trim air pressure.
When open, TAPRVs 1 and 2 regulate the hot air pressure around 4 psi above the cabin pressure in order to make sure that proper hot air mixes up with conditioned air from the mixer unit in the different supply ducts.
The ZC sends the TAPRVs 1 and 2 and TASOV position signals to the EIS. These parameters are displayed on the ECAM COND page.

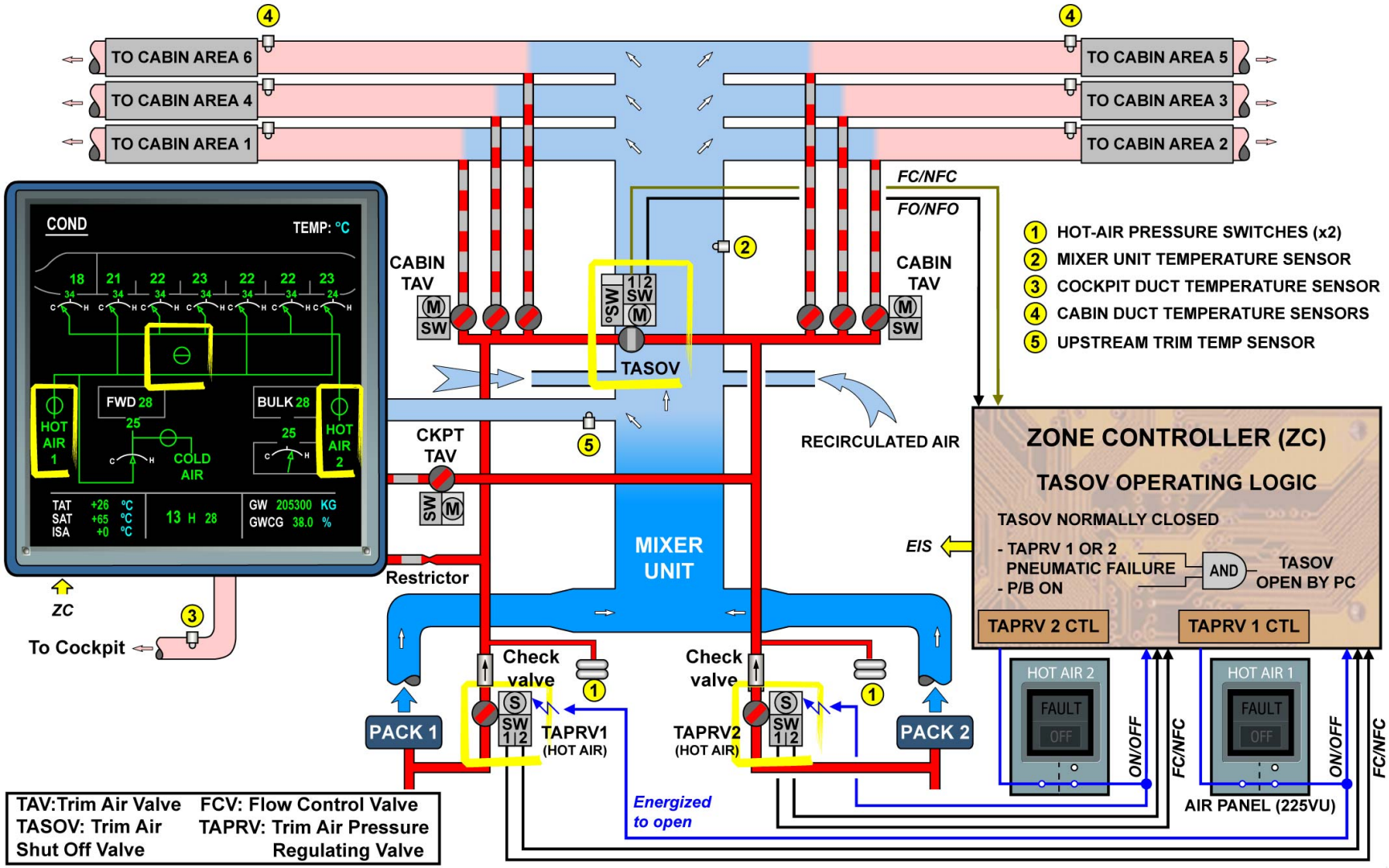

HOT AIR SUPPLY NORMAL OPERATION

G7508471 - G3NT1T0 - FM21D5AIRCCTL03

COCKPIT/CABIN AIR TEMPERATURE CONTROL D/O (3)

COCKPIT/CABIN TEMPERATURE REGULATION - TARGET TEMPERATUR CALCULATION TEMPERATURE MONITORING

The ZC:
- calculates a target temperature for the cockpit and the cabin areas according to temperature selections on the AIR panel and Flight Attendant Panel (FAP),
- determines a pack temperature demand, which agrees with the lowest temperature demand from either the cockpit or the cabin areas,
- sends this signal to both Pack Controllers (PCs) for basic air temperature regulation,
- controls the trim air valves of areas for which the temperature demand is above the lowest value for fine temperature adjustment.

TARGET TEMPERATURE CALCULATION

The crew, via two temperature selectors located on the AIR panel, selects the basic reference temperatures. One selector is dedicated to the cockpit temperature regulation and the other one to the cabin. The selection range is between 18°C (COLD) and 30°C (HOT).
An additional altitude correction is added to all cockpit and cabin areas to compensate reduced humidity and decreased inside wall surface temperature. The altitude correction depends on:
- the A/C altitude from the Cabin Pressure Controllers (CPCs),
- a correction factor selected on the Environmental Control System (ECS) ALTITUDE CORRECTION page from the MCDU (ECS SPECIFIC DATA menu).

The altitude correction can reach either 1.5°C or 0.75°C at an altitude of 40,000 ft at the most, or be disabled using the MCDU specific data menu.
For each of the cabin areas, the reference temperature set by the cabin temperature selector can be increased or decreased by the cabin crew by using the CABIN TEMPERATURE page on the FAP. The offsets are limited to ± 3.0°C by increment of 0.5°C. The cabin offsets are sent to the ZC from the Cabin Intercommunication Data System (CIDS).

DUCT TEMPERATURE DEMAND CALCULATION

Each target temperature is compared to the actual temperature measured by the applicable cockpit or cabin temperature sensor. The ZC generates, for the cockpit and the cabin areas, a temperature error signal, which agrees with to a duct temperature demand.
The duct temperature demands are:
- limited to low and high values for the pack temperature demand calculation and the trim air valves control,
- unlimited for the calculation of demands sent to other A/C systems.

The limit values can be changed on the ECS DUCT TEMP LIMITATION page from the MCDU (ECS SPECIFIC DATA menu).

PACK TEMPERATURE DEMAND CALCULATION

The lowest of the duct temperature demands is compared to the actual temperature measured by the mixer unit temperature sensor (2). The ZC generates a mixer unit temperature error signal, which agrees with the pack temperature demand. This value is sent to both PCs and used as a reference temperature for pack 1 and pack 2-temperature control.

TRIM AIR VALVE CONTROL

The fine temperature adjustment in the cockpit and in each of the cabin areas is achieved by adding hot air through the trim air valves to the air from the packs and the recirculation system. Each trim air valve control is based on a duct temperature error calculation. For that function, the actual duct temperature, measured by the applicable duct temperature sensor (3 and 4), is compared to the related limited duct temperature demand. The trim air valve position is kept constant when the actual duct temperature is equal to the demand. Each trim air valve position monitoring is based on a step-counting principle.

TEMPERATURE MONITORING

The ZC sends the actual duct temperature signals to the EIS. These parameters are displayed on the ECAM COND page. The ZC also sends the actual cockpit and cabin area temperature signals to the EIS and CIDS. These parameters are displayed on the:
- ECAM COND page,
- ECAM CRUISE page,
- FAP CABIN TEMPERATURE page (cabin area temperatures only).

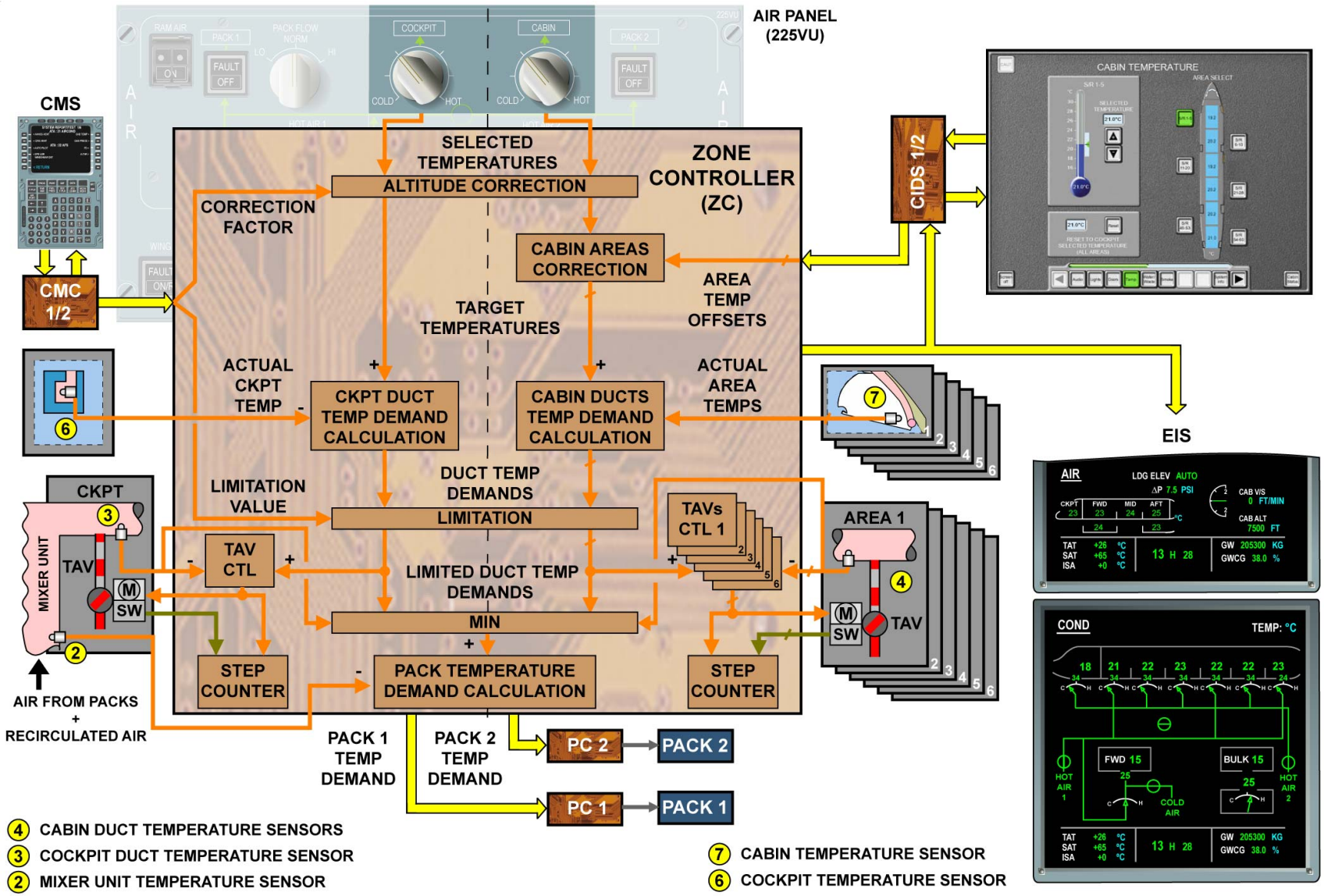

COCKPIT/CABIN TEMPERATURE REGULATION - TARGET TEMPERATUR CALCULATION TEMPERATURE MONITORING - TARGET TEMPERATURE CALCULATION ... TEMPERATURE MONITORING

G7508471 - G3NT1T0 - FM21D5AIRCCTL03

This Page Intentionally Left Blank

G7508471 - G3NT1T0 - FM21D5AIRCCTL03

COCKPIT/CABIN AIR TEMPERATURE CONTROL D/O (3)

COCKPIT/CABIN TEMPERATURE SENSORS

COCKPIT TEMPERATURE SENSORS

There is a temperature sensor in the cockpit located near the oxygen mask of the 3rd occupant. It gives zone temperature feedback to the ZC for zone temperature control, monitoring and indicating. The sensor is double element-sensing units of the thermistor type. The cockpit sensor are interchangeable.

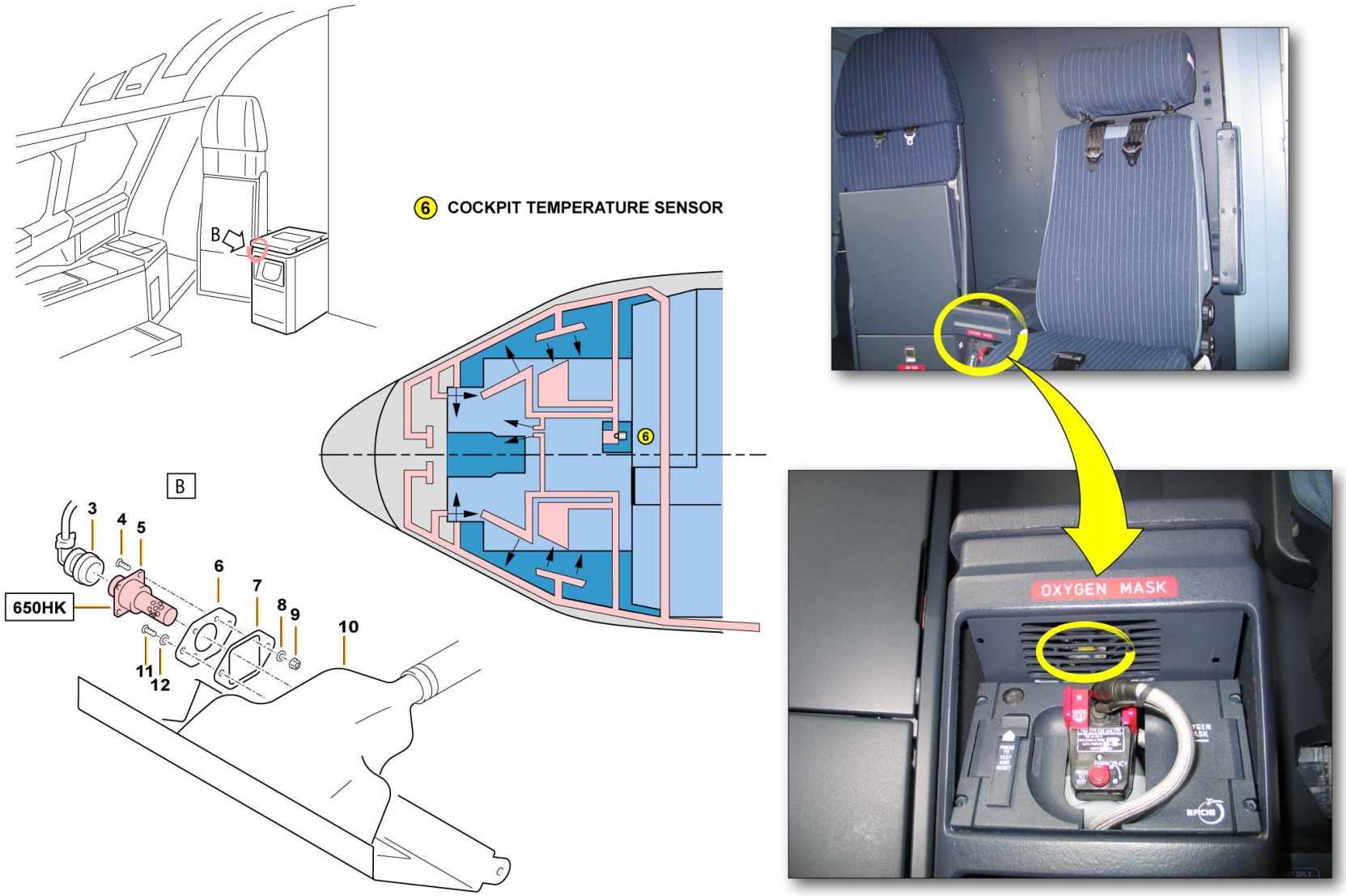

COCKPIT/CABIN TEMPERATURE SENSORS - COCKPIT TEMPERATURE SENSORS

COCKPIT/CABIN AIR TEMPERATURE CONTROL D/O (3)

COCKPIT/CABIN TEMPERATURE SENSORS (continued)

CABIN TEMPERATURE SENSORS

There is one temperature sensor per each of the 6 cabin areas located on the External Galley/Toilet duct. They give zone temperature feedback to the ZC for zone temperature control, monitoring and indicating. All sensors are double element-sensing units of the thermistor type. All cabin temperature sensors are interchangeable.

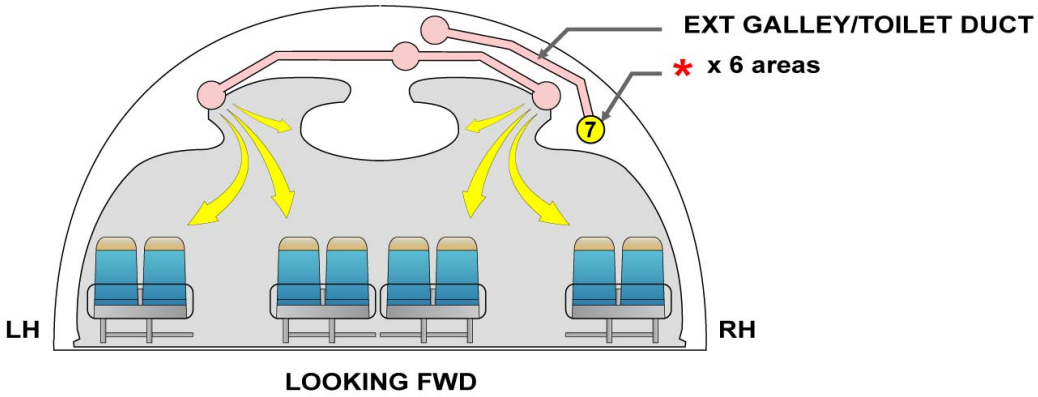

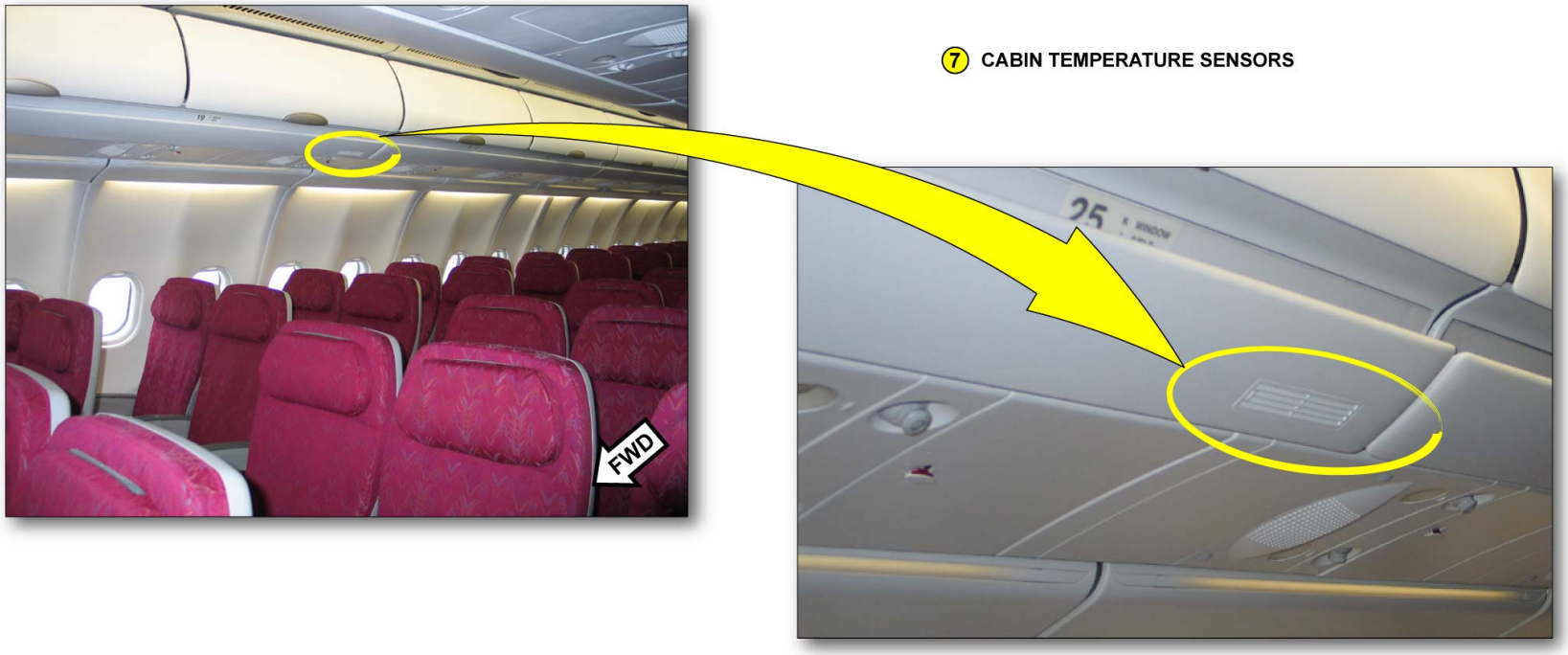

COCKPIT/CABIN TEMPERATURE SENSORS - CABIN TEMPERATURE SENSORS

COCKPIT/CABIN AIR TEMPERATURE CONTROL D/O (3)

ZONE CONTROLLER INTERFACES (COMMANDS)

In case of insufficient cooling or heating capacity or non-satisfied temperature demands, the ZC generates additional demand signals to carry out the environmental temperature and flow requirements. These signals are sent to:
- a flow demand sent to the APU Electronic Control Box (ECB),
- a pressure demand sent to the Engine Interface and Vibration Monitoring Units (EIVMUs),
- a temperature demand sent to the BMCs,
- a crossbleed valve opening request sent to the BMCs.

The various demands are set to default values in case of ZC failure.

APU FLOW DEMAND

During ECS operation with APU bleed air supply, the thermal requirements of the zones will control the airflow taken from the APU. The ZC calculates an APU flow demand signal for the ECB according to:
- the lowest unlimited duct temperature demand when more cooling is required on a very hot day and the cooling capacity is not sufficient,
- the highest unlimited duct temperature demand when a maximum heating is required on a cold day and the packs together with the trim air valves are insufficient to satisfy the zone duct temperature demands.

EIVMU PRESSURE DEMAND

When the engines are at idle speed, the bleed air pressure can become too low to satisfy the zone cooling requirements. The ZC calculates a pressure demand signal for the EIVMUs, which has an effect on the idle speed of the engines. The EIVMU pressure demand signal varies according to the lowest unlimited duct temperature demand.

BLEED TEMPERATURE DEMAND

If the cooling capacity of the packs is not sufficient to maintain the selected temperature requirements for the cabin or cargo, a signal is sent to the BMCs by the ZC in order to decrease the bleed air temperature regulation from 200°C to 150°C. This bleed temperature demand is sent to the BMCs if:
- at least one pack is in full cooling mode (ram air outlet nearly FO) and the A/C is in flight,
- at least one pack temperature cannot meet its pack temperature demand.

The bleed temperature demand is inhibited during flight if the wing anti ice system is operative (WING ANTI ICE P/BSW set to ON).

CROSSBLEED VALVE OPENING REQUEST

During a single pack operation, it is necessary to open the crossbleed valve in order to:
- reduce the pressure drop inside the bleed system,
- increase the running pack power due to second bleed system activation.

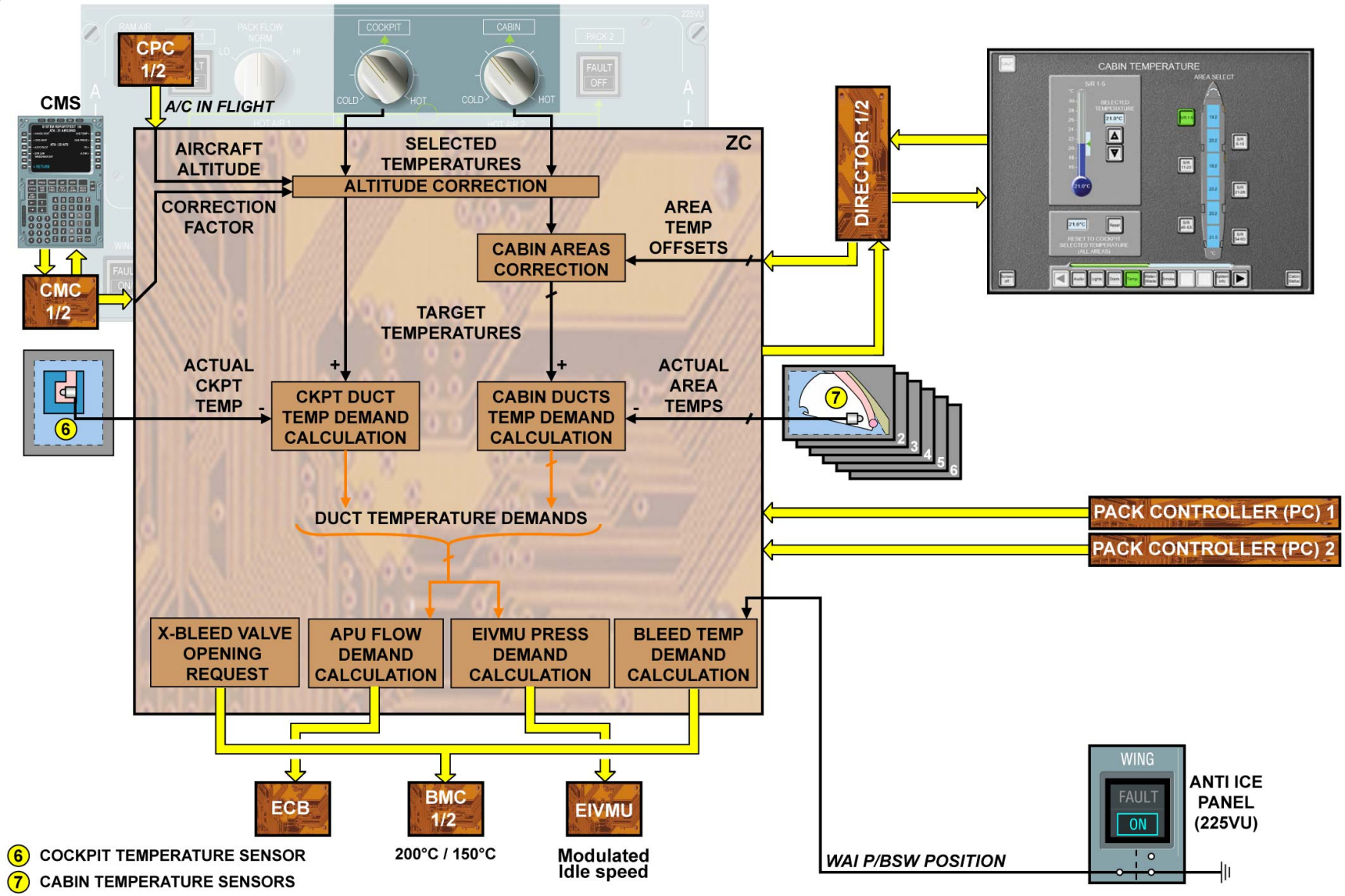

ZONE CONTROLLER INTERFACES (COMMANDS) - APU FLOW DEMAND ... CROSSBLEED VALVE OPENING REQUEST

G7508471 - G3NT1T0 - FM21D5AIRCCTL03

COCKPIT/CABIN AIR TEMPERATURE CONTROL D/O (3)

ABNORMAL OPERATION: DUCT OVERHEAT AND OVER PRESSURE

The system is able to:
- cope with a single trim air supply failure,
- cope with complete trim air supply loss,
- detect a duct overheat,
- detect an overpressure,
- cope with a ZC failure.

DUCT OVERHEAT DETECTION

A duct overheat condition is activated as soon as a duct temperature is sensed by the cockpit duct temperature sensor (3) or any one of the cabin duct temperature sensors (4) rises above 88°C.
Depending on the affected trim air system, the ZC will automatically close:
- the TAPRV,
- the applicable TAVs,
- the TASOV if open.

Moreover, if a duct overheat occurs in both trim air systems, the fine temperature in each zone will be completely lost.
The ZC will trigger:
- a FAULT light on the related HOT AIR P/BSW,
- an ECAM warning message on the EWD,
- an amber duct temperature indication on the ECAM COND page.

The duct overheat condition is reset if:
- the duct temperature drops below 70°C,
- the related HOT AIR P/BSW is set to OFF then back to ON.

As a consequence, the ZC reopens the applicable TAPRV and the FAULT light on the related HOT AIR P/BSW goes off.

OVERPRESSURE DETECTION

The hot air pressure switch (1) closes if the pressure rises above 6.5 psi in the applicable trim air supply system. Thus, an overpressure signal is sent to the ZC until the pressure drops back below 5 psi. Consequently, the ZC transmits.

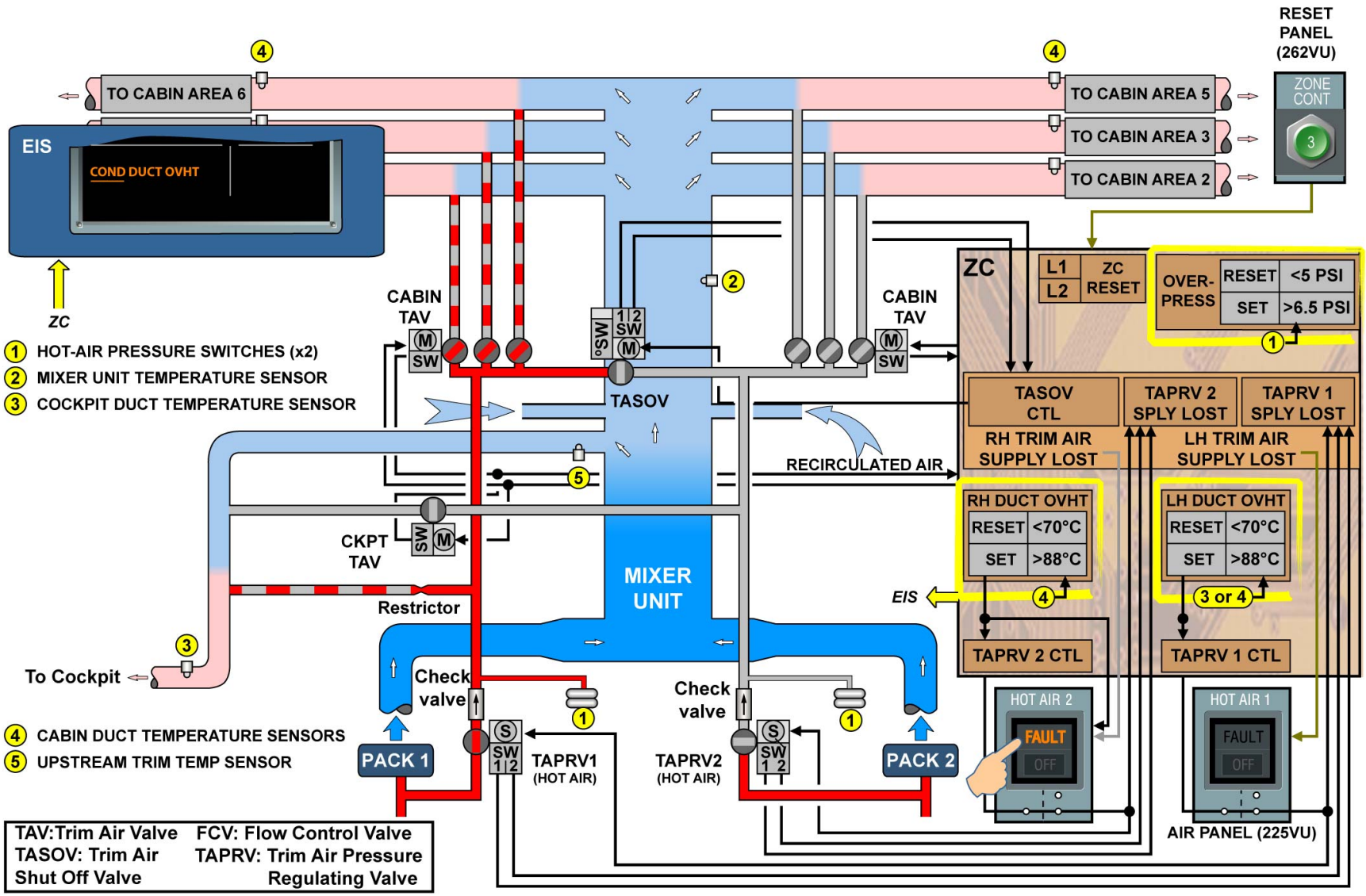

ABNORMAL OPERATION: DUCT OVERHEAT AND OVER PRESSURE - DUCT OVERHEAT DETECTION & OVERPRESSURE DETECTION

G7508471 - G3NT1T0 - FM21D5AIRCCTL03

COCKPIT/CABIN AIR TEMPERATURE CONTROL D/O (3)

ABNORMAL OPERATION: HOT AIR SOURCE FAILURE

SINGLE TRIM AIR SUPPLY FAILURE

The ZC automatically opens the TASOV if one trim air supply is lost due to a TAPRV failed closed or spring-loaded closed (one pack off). It enables the system to restore hot air supply and thus fine temperature adjustment in the failed side. However, the TASOV is kept closed in case of manual TAPRV closure from the HOT AIR P/BSW.
A single trim air supply loss may occur if one TAPRV or the TASOV has failed closed. In such a case, the ZC automatically closes the affected TAVs. The ZC will also trigger:
- a FAULT light on the related HOT AIR P/BSW,
- an ECAM warning message on the EWD,
- an amber TAPRV position indication on the ECAM COND page,
- an amber TASOV position indication on the ECAM COND page.

COMPLETE TRIM AIR SUPPLY LOSS

The fine temperature adjustment is no longer possible when both trim air supplies are lost. This may occur if both TAPRVs have failed closed. In such a case, the ZC automatically closes all TAVs. The ZC will also trigger:
- a FAULT light on both HOT AIR P/BSWs,
- an ECAM warning message on the EWD,
- an amber TAPRVs 1 and 2 position indication on the ECAM COND page.

G7508471 - G3NT1T0 - FM21D5AIRCCTL03

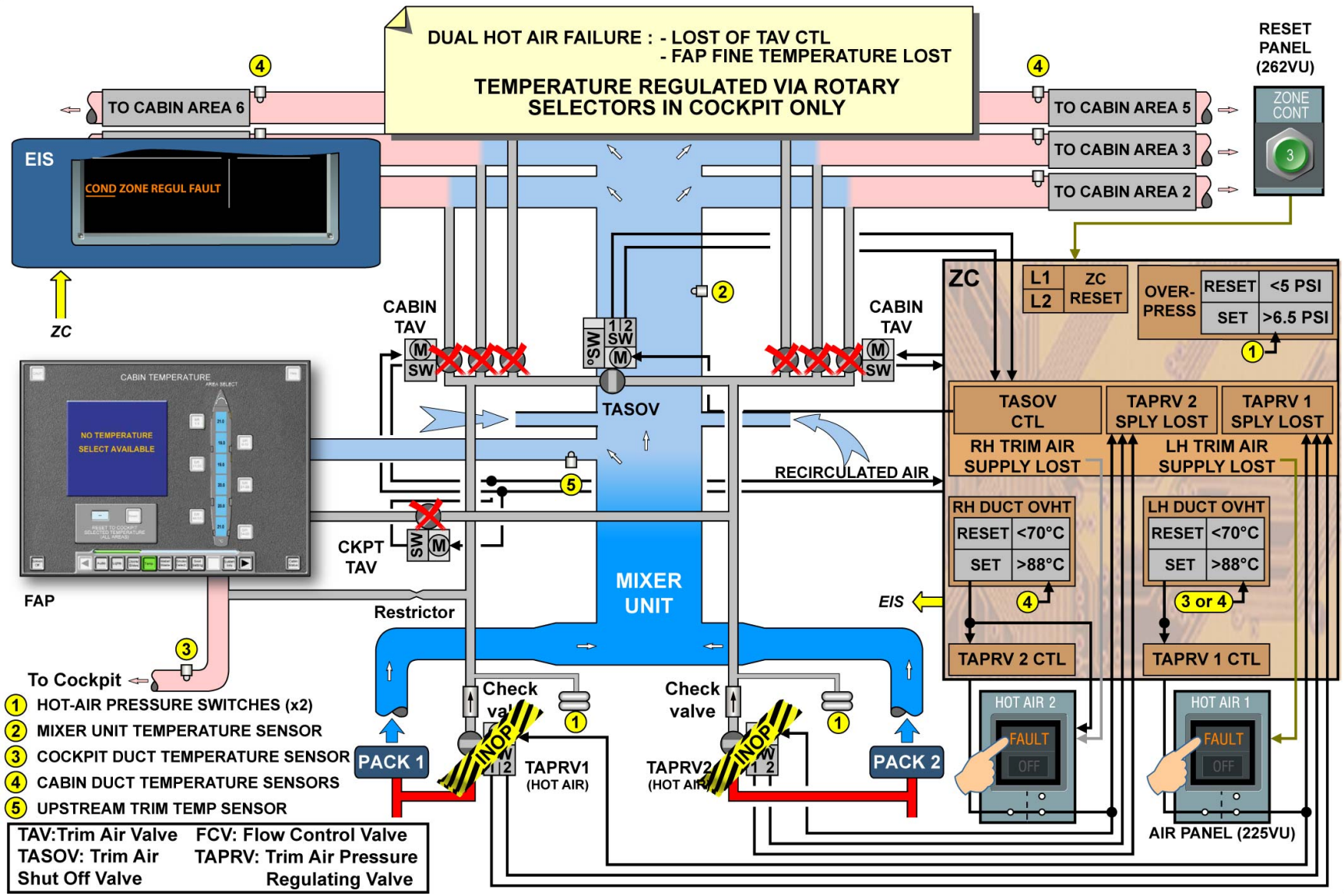

ABNORMAL OPERATION: HOT AIR SOURCE FAILURE - SINGLE TRIM AIR SUPPLY FAILURE & COMPLETE TRIM AIR SUPPLY LOSS

G7508471 - G3NT1T0 - FM21D5AIRCCTL03

COCKPIT/CABIN AIR TEMPERATURE CONTROL D/O (3)

ABNORMAL OPERATION: ZONE CONTROLLER TOTAL FAILURE (LANE 1+2 FAIL)

All control and monitoring functions remain if one lane has failed. The other lane takes over and triggers:
- an ECAM warning message on the EWD,
- an amber ZC lane indication on the ECAM COND page.

A full ZC failure or ZC power supply loss leads to the closure of the TAPRVs (solenoid de-energized). The TAVs and TASOV remain in their last position and the fine temperature adjustment is no longer possible. As no data is available, the PCs set the various demands usually sent by the ZC to default values. Indications about the cockpit and cabin temperature control system are no longer available on the:
- ECAM COND page,
- ECAM CRUISE page,
- FAP CABIN TEMPERATURE page.

Moreover, the EIS triggers:
- an ECAM warning message on the EWD,
- an amber ZONE CTLR indication on the ECAM COND page.

The ZC can be reset from the ZC reset P/B located on the RESET panel.

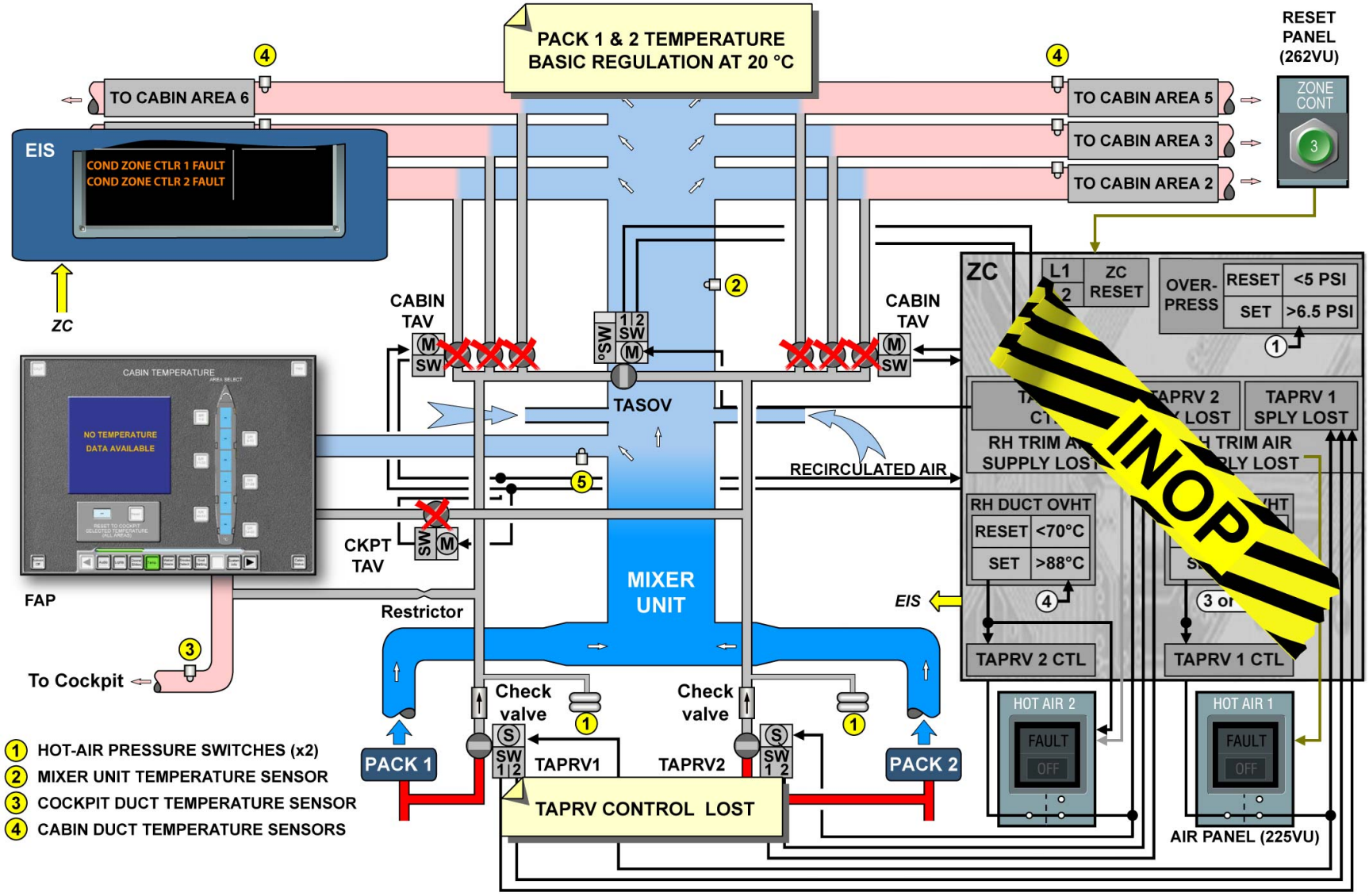

ABNORMAL OPERATION: ZONE CONTROLLER TOTAL FAILURE (LANE 1+2 FAIL)

G7508471 - G3NT1T0 - FM21D5AIRCCTL03

AIR RECIRCULATION AND MANAGEMENT D/O (3)

SYSTEM DESCRIPTION

The system makes:
- the recirculation flow regulation,
- the cabin air filtering,
- the avionics equipment air supply.

RECIRCULATION FANS

The two re-circulation fans are constant speed fans. Each fan has:
- a fan wheel in a housing,
- a three-phase 115V AC induction synchro motor,
- thermal switches.

The thermal switches shut off the power supply to protect the motor in case of temperature overheat.

RECIRCULATION VALVES

The two re-circulation valves are shut-off butterfly valves. Each valve is mechanically actuated by a 28V DC motor and electrically controlled from the Ventilation Controller (VC). The recirculation valves have two positions, open or closed. In closed position, the butterfly still allows airflow through the valve, so they operate as restrictors. Each valve has 2 limit switches for Fully Closed/Not Fully Closed (FC/NFC) and Fully Opened/Not Fully Opened (FO/NFO) position indication. There is a manual lever used to see the butterfly valve position and to manually change it.

RECIRCULATION FILTER-HOUSINGS/FILTERS

There are two FWD filter-housings located at the rear of the FWD cargo compartment, near the mixer unit. Each one has:
- a double frame,
- a pressure port for the clogging indicator connection,
- quick release fasteners for filter locking,
- 2 filter elements.

There are 2 aft filter-housings located at the front of the aft cargo compartment. Each one has:
- a single frame,
- quick release fasteners for filter locking,
- 2 filter elements.

All filter elements are identical and disposable.

CLOGGING INDICATORS

There are two clogging indicators. Each one is connected through a duct to a FWD recirculation filter-housing. The clogging indicators are differential pressure switches.

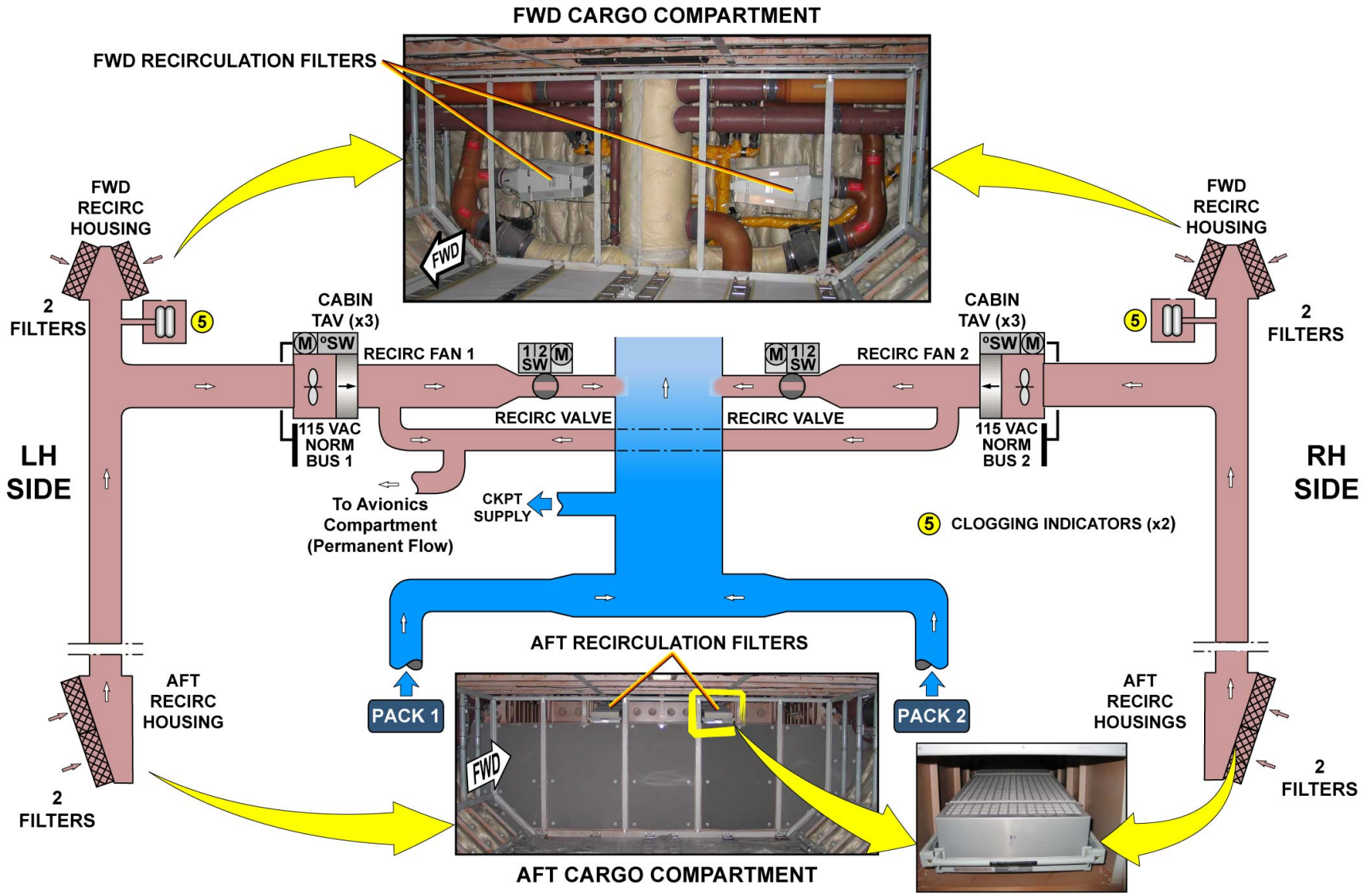

SYSTEM DESCRIPTION - RECIRCULATION FANS ... CLOGGING INDICATORS

G7508471 - G3NT1T0 - FM21D6AIRRECI03

AIR RECIRCULATION AND MANAGEMENT D/O (3)

RECIRCULATION FANS SHUT-OFF

The VC will automatically stop the fans through discrete OFF command signals according to:
- the CAB FANS P/BSW position,
- fan overheat status.

ON/OFF FUNCTION

The VC stops both recirculation fans when the CAB FAN P/BSW is set to OFF.

FAN OVERHEAT/RESET

In case of fan overheat, the VC gets a FAN OVERHEAT STATUS signal via the CAN bus and sends back a discrete OFF command signal to the concerned recirculation fan. The VC will also trigger:
- the FAULT light on the OVHT COND FANS RESET P/B,
- a related ECAM warning message on the EWD,
- an amber FAN symbol on the COND page.

If the overheat condition no longer exists and if the OVHT COND FANS RESET P/B is pressed in, a common FAN RESET signal is sent to the VC. The FAULT light on the OVHT COND FANS RESET P/B and related warnings will go off. The VC will send a discrete ON command signal to the concerned recirculation fan.

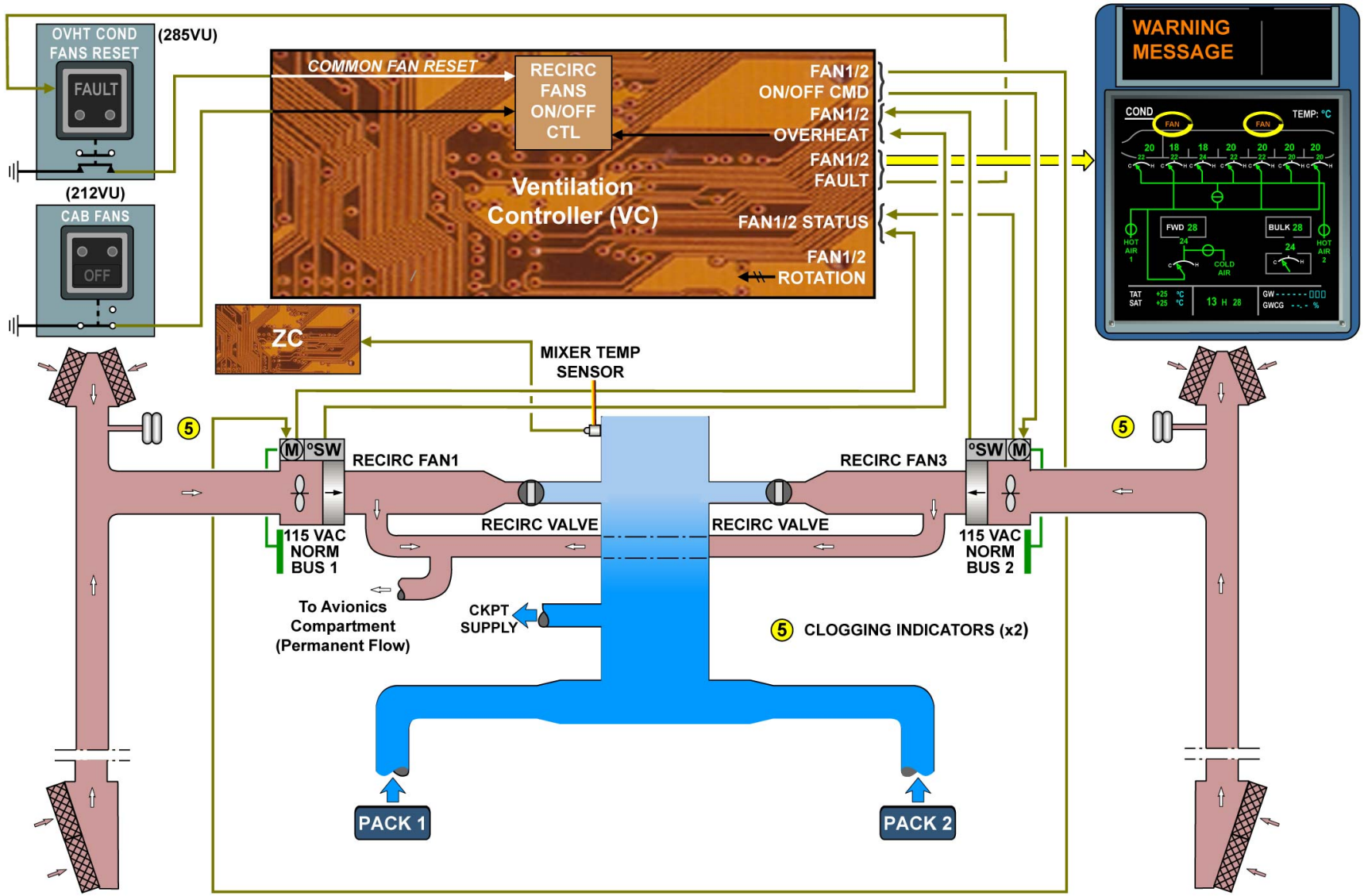

RECIRCULATION FANS SHUT-OFF - ON/OFF FUNCTION & FAN OVERHEAT/RESET

G7508471 - G3NT1T0 - FM21D6AIRRECI03

AIR RECIRCULATION AND MANAGEMENT D/O (3)

RECIRCULATION VALVES CLOSURE

The two recirculation valves are normally controlled to the open position.
In order to supply sufficient air to the avionics compartment, the VC controls both valves to close if:
- both packs are off (FCV1 and FCV2 FC),
- at least one fan out of fan 1 and fan 2 is operative.

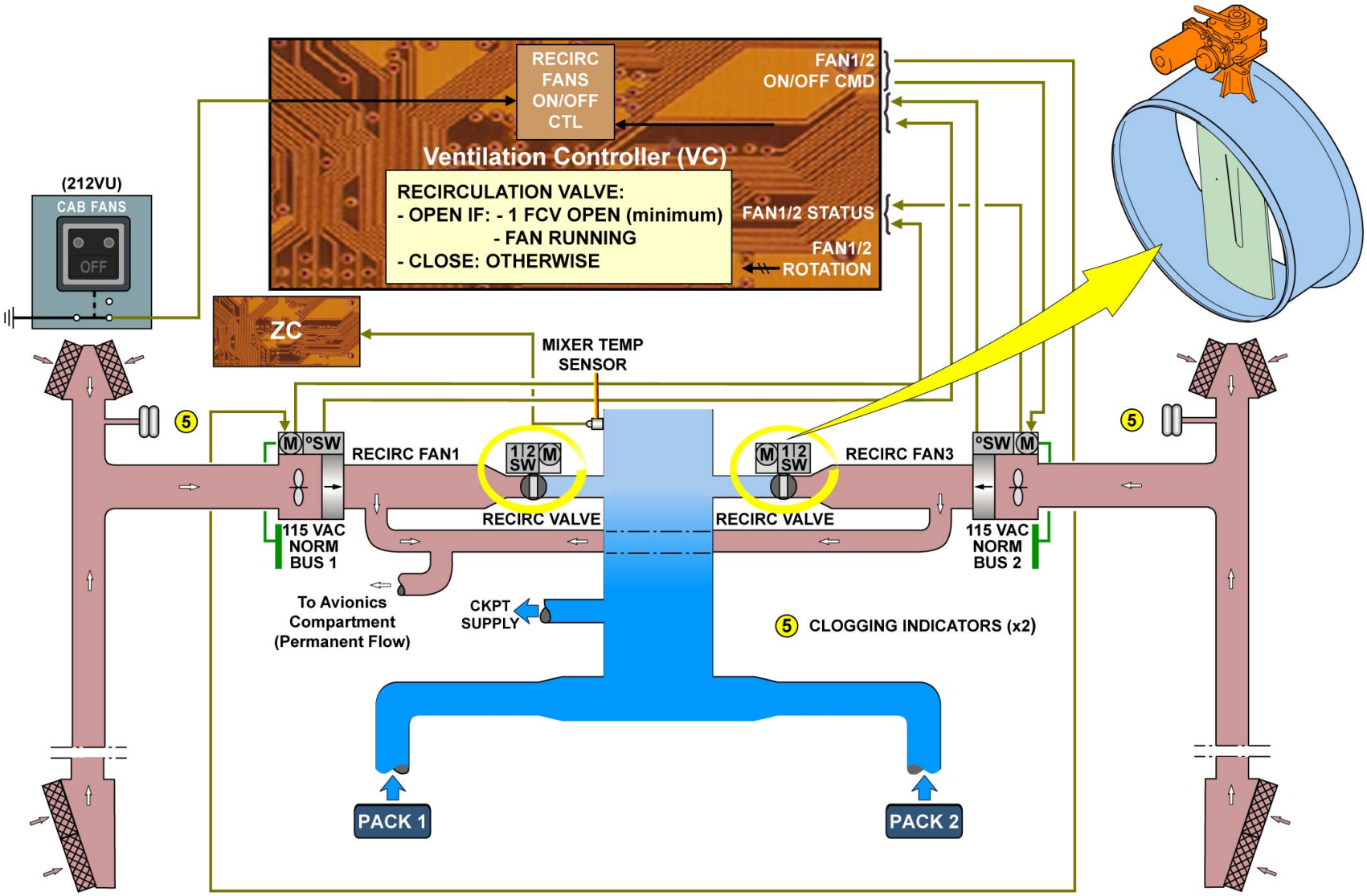

RECIRCULATION VALVES CLOSURE

G7508471 - G3NT1T0 - FM21D6AIRRECI03

AIR RECIRCULATION AND MANAGEMENT D/O (3)

RECIRCULATION FILTERS CLOGGING

In case of filter clogging, the related clogging indicator detects a differential pressure and sends a signal to the VC. This signal is valid only if:
- the A/C is on ground,
- both packs are off (FCV1 and FCV 2 FC),
- both recirculation fans are operative.

The recirculation filter clogged valid signal is transmitted as a class 2 failure to the Central Maintenance Computer (CMC) if it has been detected in 3 different flight legs.

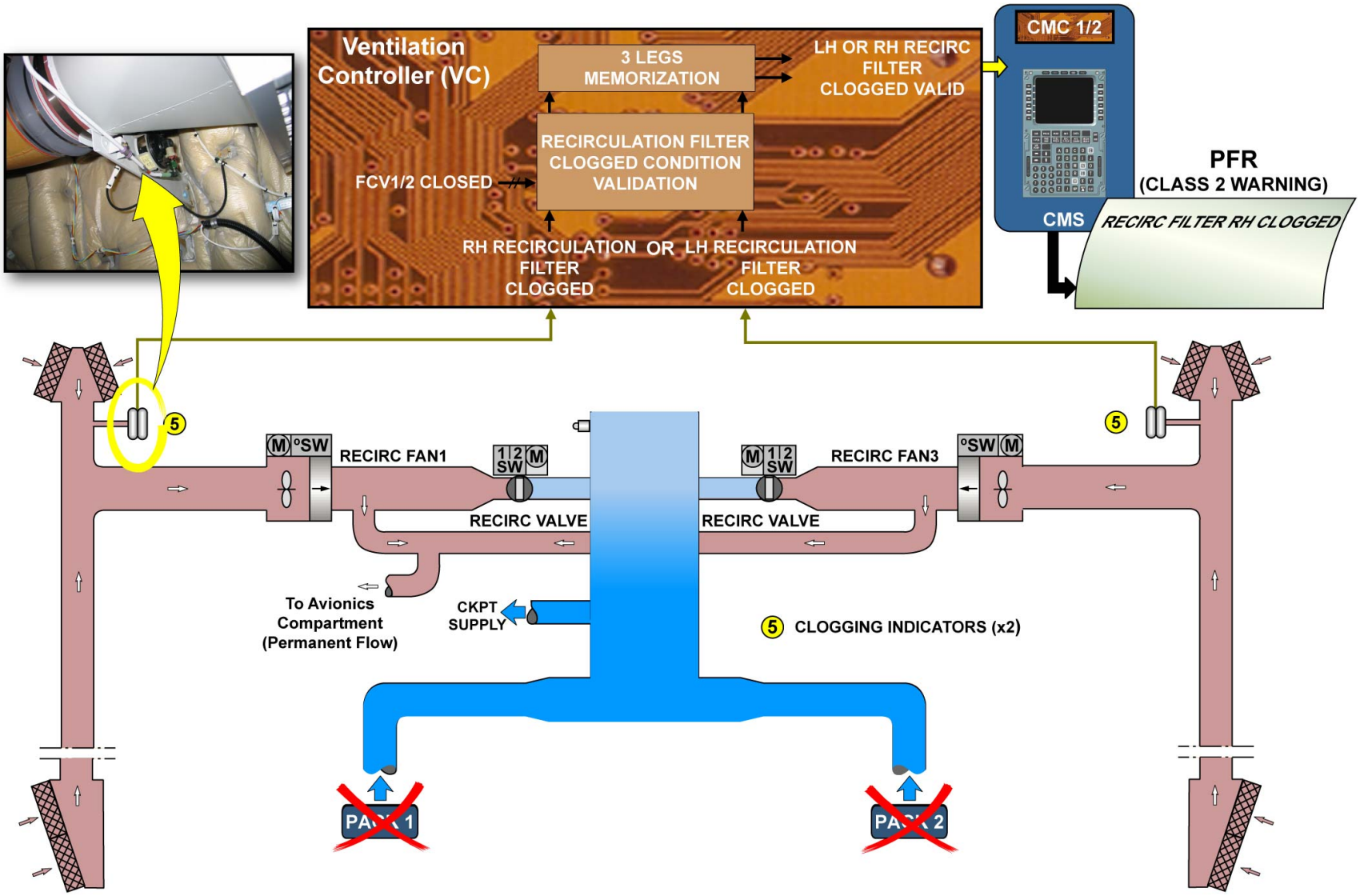

RECIRCULATION FILTERS CLOGGING

G7508471 - G3NT1T0 - FM21D6AIRRECI03

COCKPIT/CAB AIR DISTRIBUTION & VENT D/O (3)

AIR DISTRIBUTION

The air distribution system supplies controlled temperature and conditioned air to the cabin, cockpit, lavatory and galley areas. The cabin is divided into 6 areas. Each cabin area corresponds to a distribution duct coming from the mixer unit. In each zone, distribution is equally split between left and right hand sides. Used cabin air, which has entered the underfloor area, is drawn by recirculation fans to the mixer unit. The fresh air that enters the mixer unit in normal operation comes from the air conditioning packs. In flight, if both air conditioning packs are not serviceable, outside ambient can be used to supply the mixer unit through the emergency ram air inlet. When the aircraft is on ground, a ground air cart can be connected to the LP ground connectors. This can supply air to the distribution network without operation of the packs.

G7508471 - G3NT1T0 - FM21DG000000001

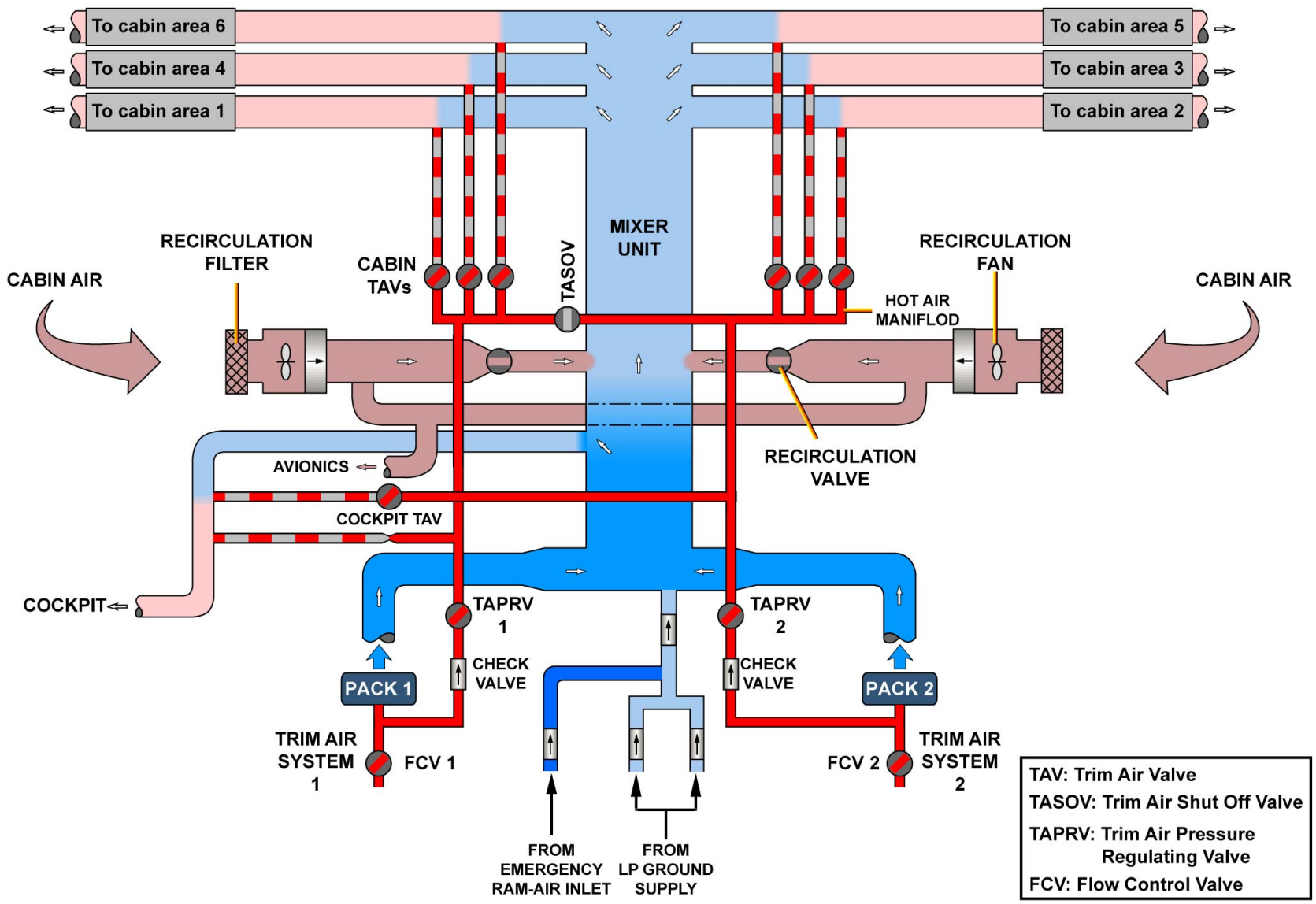

AIR DISTRIBUTION

G7508471 - G3NT1T0 - FM21DG00000001

COCKPIT/CAB AIR DISTRIBUTION & VENT D/O (3)

AIR DISTRIBUTION (continued)

COCKPIT AIR DISTRIBUTION

The cockpit supply duct is connected to a cockpit duct network in order to spread the air throughout the cockpit zone. Air enters the cockpit through fixed and adjustable outlets. It is extracted through vents in the floor. Cockpit air supply mainly comes from pack 1 even if air goes through the mixer unit. It minimizes the possibility of smoke and odors entering the cockpit from other compartments.

G7508471 - G3NT1T0 - FM21DG000000001

1L	1R	WINDSHIELD AIR OUTLETS
2L	2R	PILOT INDIVIDUAL AIR NOZZLES
3L	3R	PILOT FEET AIR OUTLETS
4L	4R	SIDE WINDOW AIR OUTLETS
5L	5R	CONSOLE AIR OUTLETS
6L	6R	CEILING AIR DIFFUSERS
7L	7R	THIRD, FOURTH INDIVIDUAL AIR NOZZLES

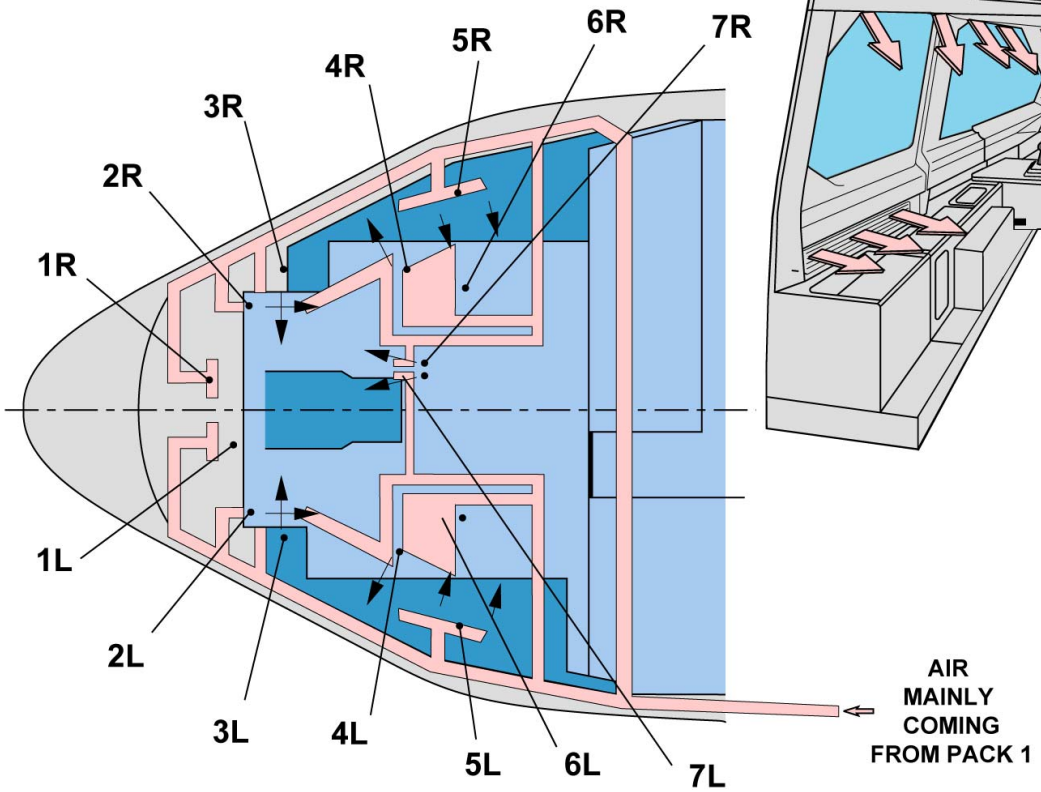

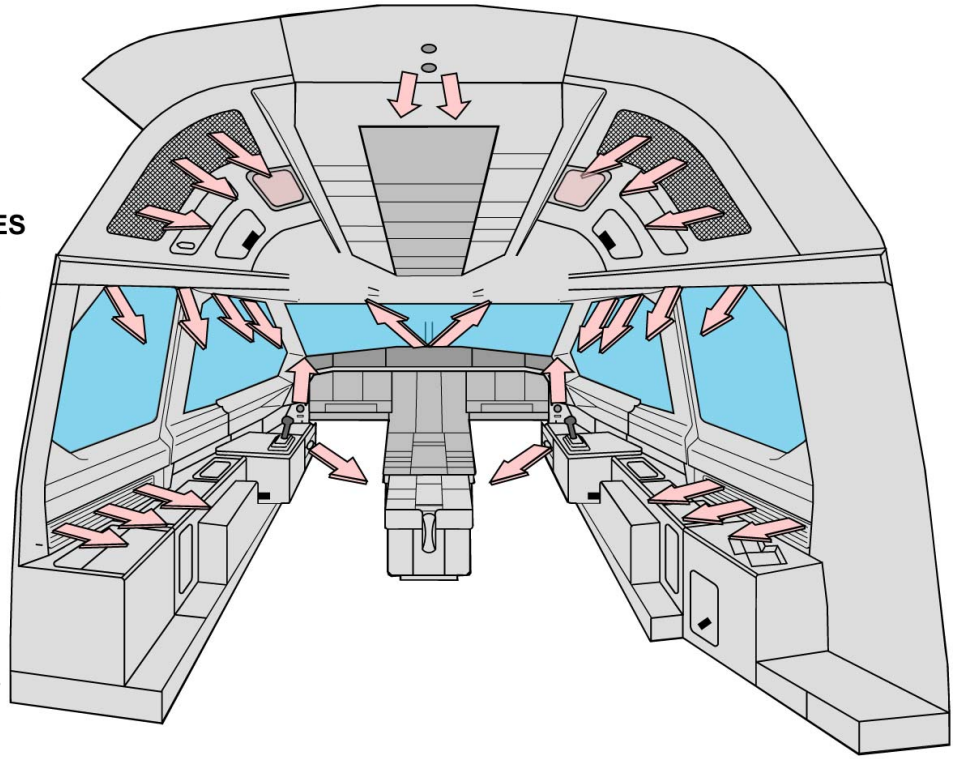

AIR DISTRIBUTION - COCKPIT AIR DISTRIBUTION

G7508471 - G3NT1T0 - FM21DG000000001

COCKPIT/CAB AIR DISTRIBUTION & VENT D/O (3)

AIR DISTRIBUTION (continued)

CABIN AIR DISTRIBUTION

The system supplies controlled temperature and conditioned air to each cabin passenger area and to each passenger through individual air outlets from the cabin distribution ducts. The distribution ducts are installed in the ceiling area of the cabin. The air then flows to supply ducts at overhead storage compartment level and in the lateral and center overhead stowages and out of the individual air outlets. The individual air outlets are installed in the Passenger Service Information Unit (PSIU). Flexible hoses connect the supply ducts to individual air outlets. Each individual air outlet has a ball mechanism, which permits the airflow to be adjusted. The same type of air outlet is also installed in the lavatories. Ambient air is extracted through vents at the floor level. It is then either recirculated or discharged overboard by the pressurization system.

G7508471 - G3NT1T0 - FM21DG000000001

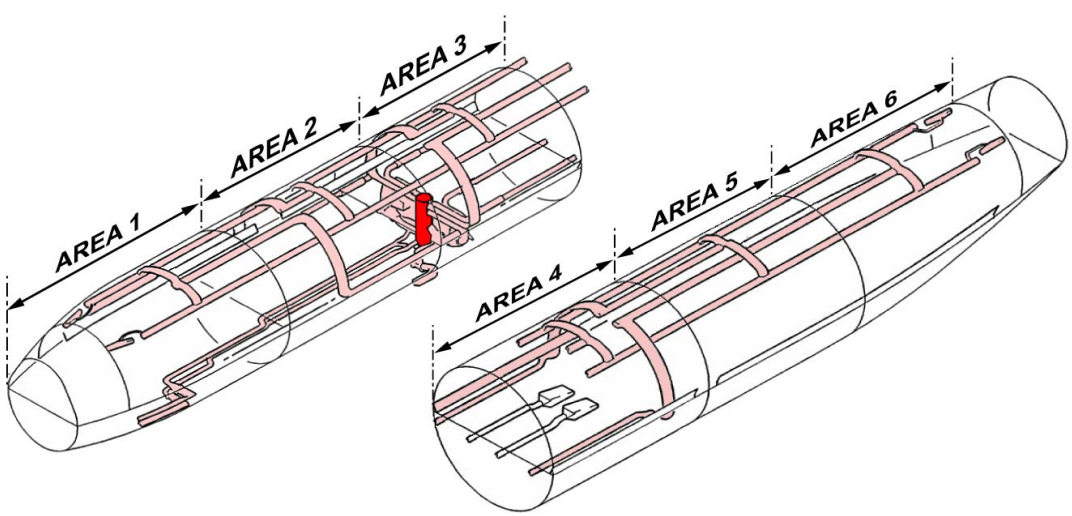

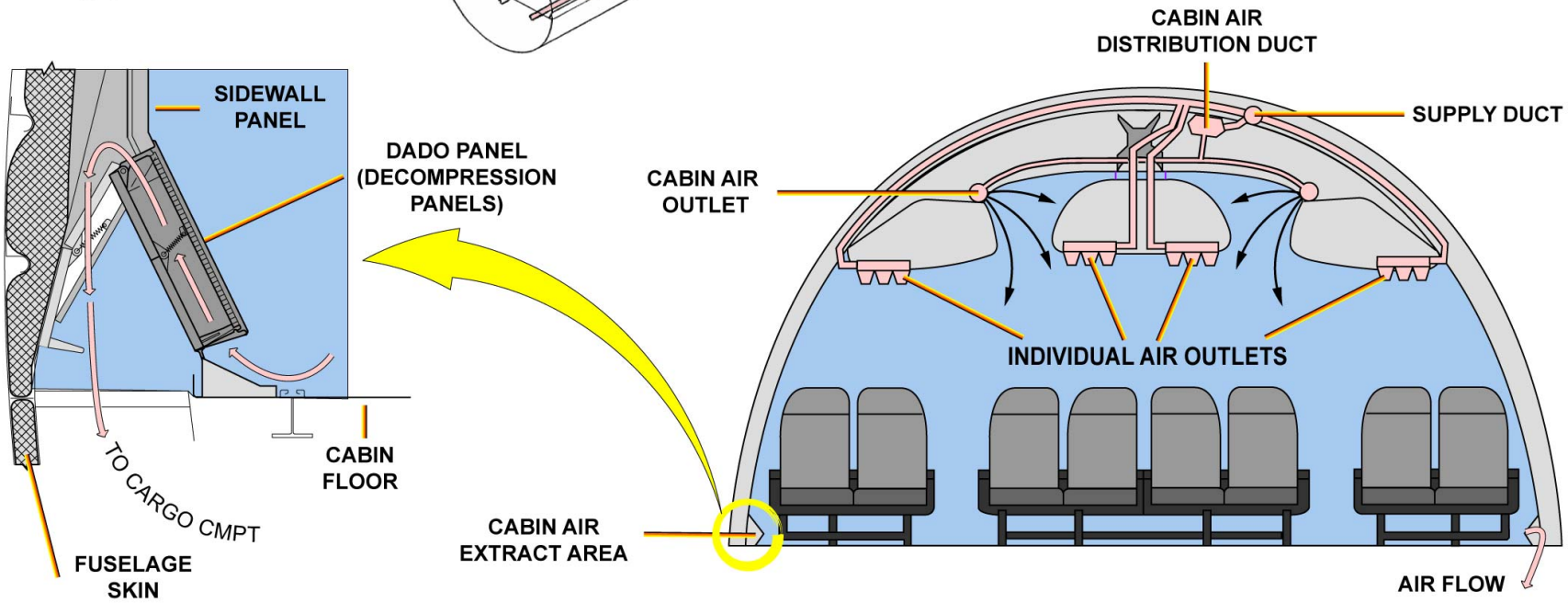

AIR DISTRIBUTION - CABIN AIR DISTRIBUTION

G7508471 - G3NT1T0 - FM21DG00000001

GALLEY AND TOILET VENTILATION D/O (3)

SYSTEM DESCRIPTION

The system performs the:
- galley and toilet ventilation control and monitoring,
- abnormal/degraded operation handling.

VENTILATION CONTROLLER (VC)

The Ventilation Controller (VC) contains two independent computer lanes, each of which is able to perform all control, monitoring and BITE functions. One of these lanes is designated as being "active" while the other lane remains in a passive "hot-standby" mode. An automatic changeover occurs at the end of each flight or during the flight, if there is a failure in the active lane. Should a fault exist in both lanes, active control will be passed to the lane with the least significant fault. A covered RS 232 test equipment connector is fitted to the controller. The VC provisions are defined through pin programming.

EXTRACTION FAN

The extraction fan is a single speed fan. It is driven by a three-phase induction motor and controlled from the VC. Thermal switches ensure overheat protection by cutting off the motor power supply.

SAFETY SWITCH

The safety switch is a differential pressure switch. It detects any negative differential pressure between the cabin and the extraction duct and sends a signal to the VC.

DIFFERENTIAL PRESSURE SWITCH

The differential pressure switch measures the difference between the internal and external pressure and sends a signal to the VC if the pressure is above 1 psi. It is used to stop the extraction fan. This differential pressure switch is fitted in the FWD cargo compartment, near to the cargo door.

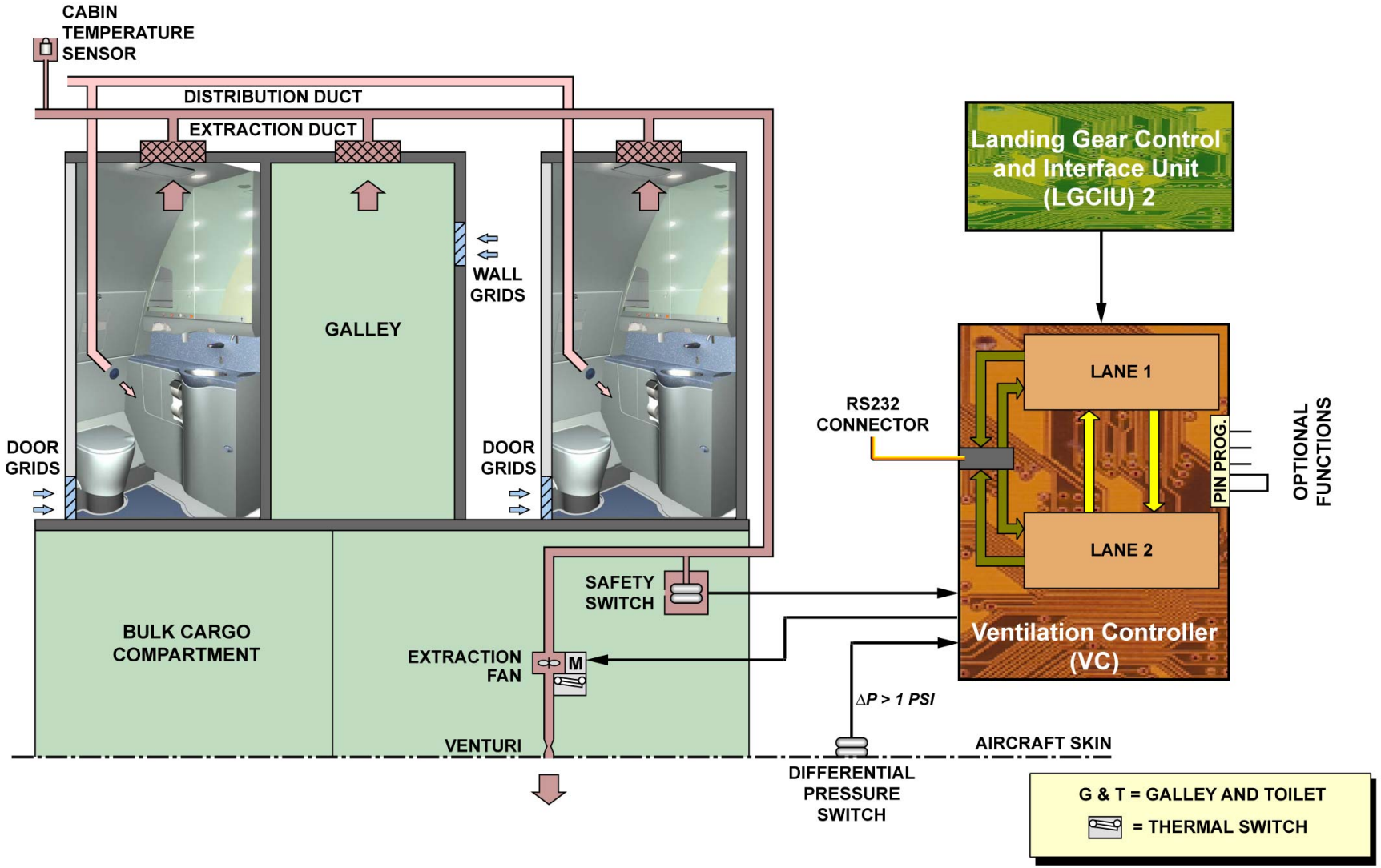

SYSTEM DESCRIPTION - VENTILATION CONTROLLER (VC) ... DIFFERENTIAL PRESSURE SWITCH

G7508471 - G3NT1T0 - FM21D7VENTLAV03

GALLEY AND TOILET VENTILATION D/O (3)

NORMAL OPERATION

The ventilation system is automatically controlled by the VC, using Flight/Ground input from LGCIU 2. In normal conditions, the VC controls the extraction fan. The galley and toilet ventilation is ensured by differential pressure, when the differential pressure is greater than 1 psi. The VC switches on the extraction fan power supply when aircraft is on ground, or in flight if the differential pressure is less than 1 psi. The VC monitors the extraction fan power feedback.

ABNORMAL/DEGRADED OPERATION

GENERAL

The galley and toilet extraction fan stops in case of:
- ditching,
- both packs off,
- emergency configuration,
- fan failure,
- fan overheat,
- VC failure.

The system is also able to detect an underpressure condition in the extraction duct. In case of VC fault or fan fault status on ground, the cabin temperature sensors are no longer properly ventilated and cabin temperature measurement is not accurate enough to be used as actual temperature. The Zone Controller (ZC) shall use a fixed duct temperature demand depending on the Total Air Temperature (TAT) for the cabin temperature regulation.

DITCHING

When ditching is selected on the DITCHING P/BSW, the VC stops the extraction fan.

BOTH PACKS OFF

When no air conditioning is available (both packs off), the VC stops the extraction fan.

EMERGENCY CONFIGURATION

If the aircraft is in an emergency configuration (loss of all four main AC-bus bars), the VC shuts down the extraction fan.

FAN FAILURE

If no power feedback is received, the VC switches off the extraction fan power supply and triggers an ECAM warning message on the EWD.

FAN OVERHEAT/RESET

In case of fan overheat condition, thermal switches cut off the extraction fan power supply. The VC triggers a FAULT light on the OVHT COND FANS RESET P/BSW and latches the fan overheat condition. The fan overheat condition can be reset by pushing the OVHT COND FANS RESET P/BSW. As a consequence, the FAULT light goes off and the extraction fan starts again, provided the overheat condition is no longer present.

UNDERPRESSURE

The VC triggers an ECAM warning message on the EWD when an underpressure condition is sensed by the safety switch at an aircraft altitude greater than 20.000 ft during three consecutive flight legs.

VENTILATION CONTROLLER FAILURE

All control and monitoring functions remain if one lane has failed. The other lane takes over and triggers:
- an ECAM warning message on the EWD,
- an amber VC lane indication on the ECAM COND page.

The VC faulty lane can be reset from the dedicated VENT CONT LANE reset P/B located on the RESET panel.

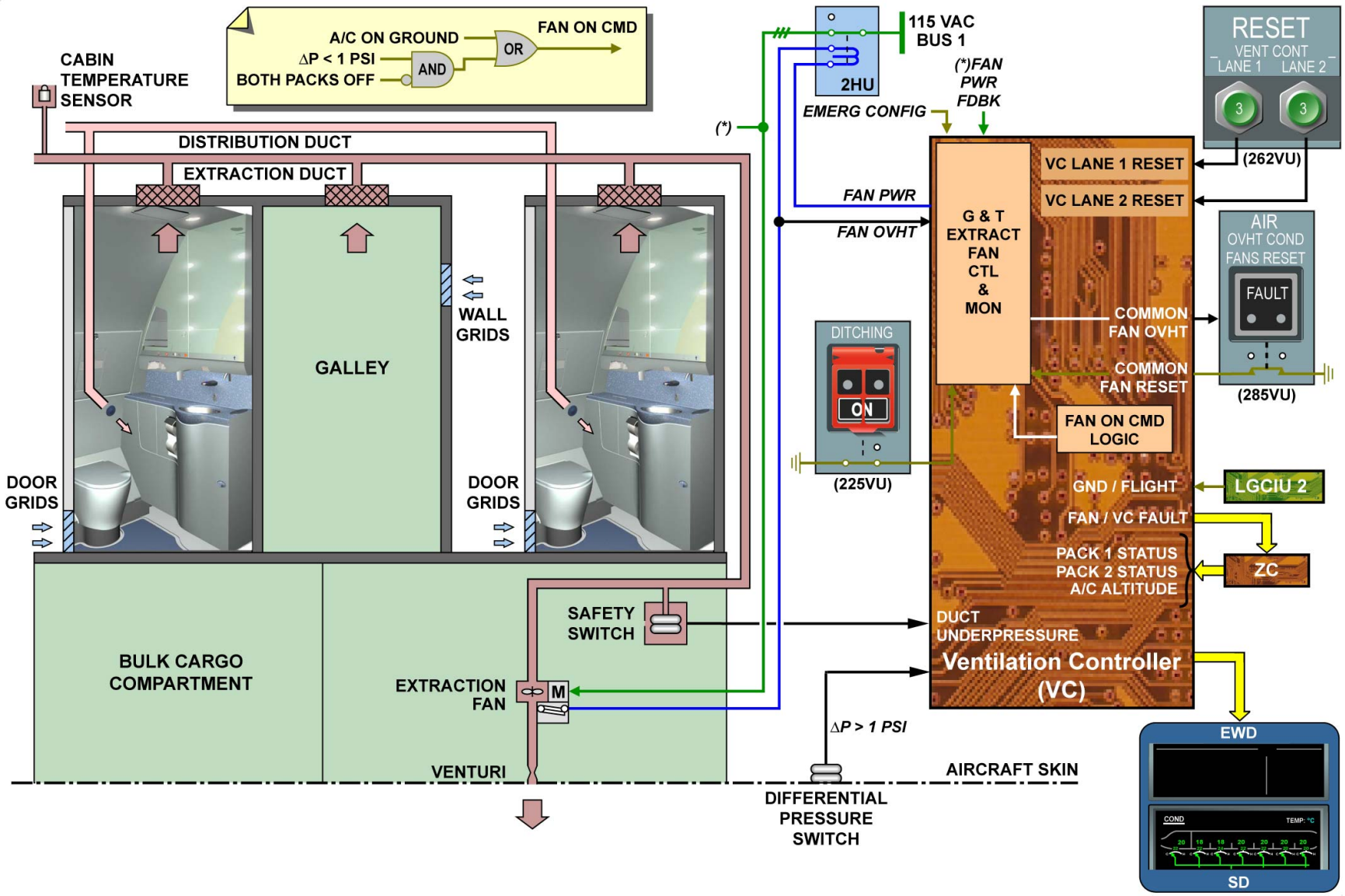

NORMAL OPERATION & ABNORMAL/DEGRADED OPERATION

G7508471 - G3NT1T0 - FM21D7VENTLAV03

AFT GALLEY HEATING D/O (3)

GENERAL

The aft galley-area heating system increases the temperature of the air in the aft galley area. The air comes from the cabin air supply area and flows through a heater located in the upper part of the aft galley.

G7508471 - G3NT1T0 - FM21DJ000000001

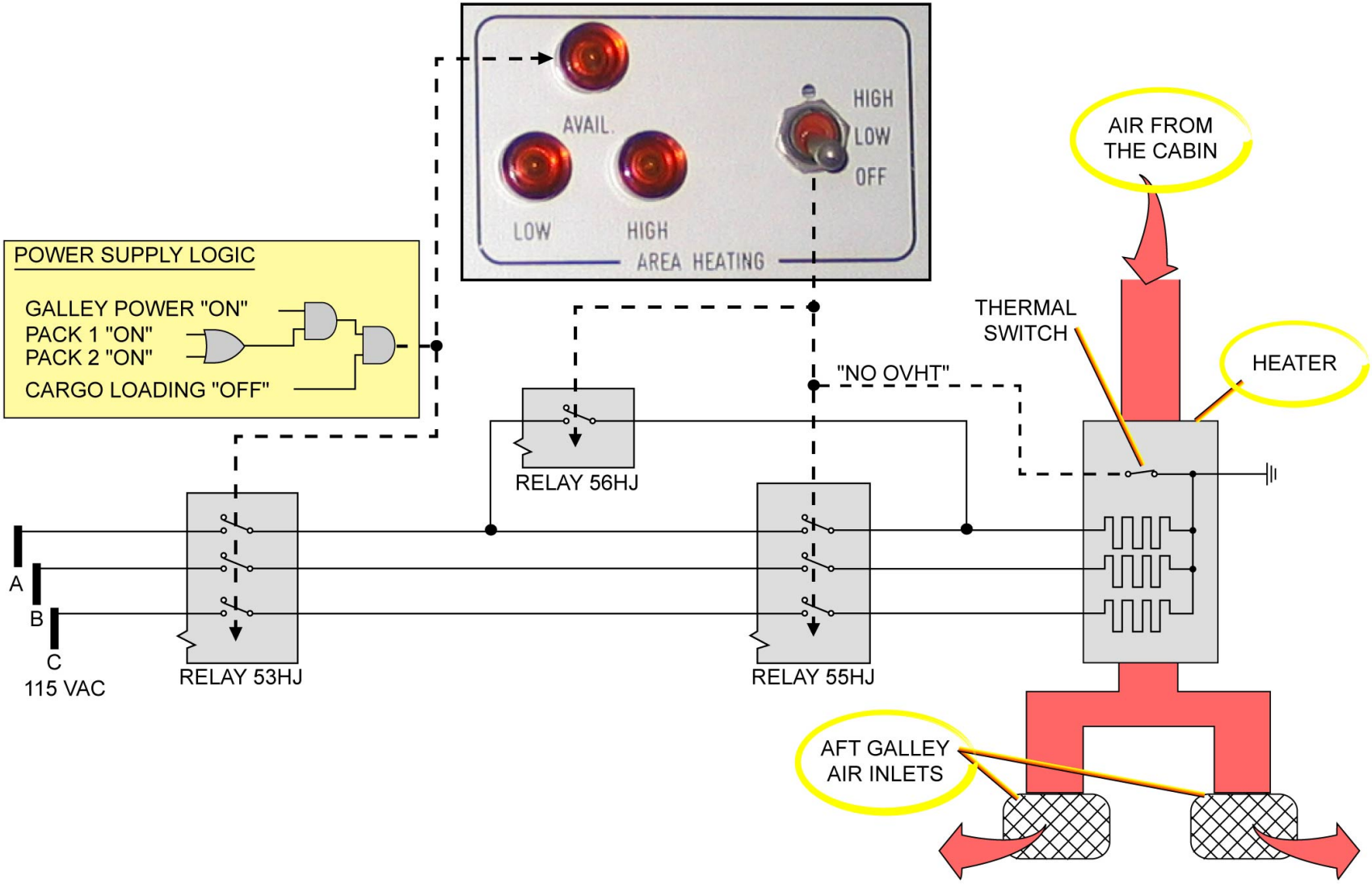
AVAIL.
LOW
HIGH
HIGH
LOW
OFF
AREA HEATING
POWER SUPPLY LOGIC
GALLEY POWER "ON"
PACK 1 "ON"
PACK 2 "ON"
CARGO LOADING "OFF"
RELAY 56HJ
"NO OVHT"
THERMAL SWITCH
AIR FROM THE CABIN
HEATER
A
B
C
115 VAC
RELAY 53HJ
RELAY 55HJ
AFT GALLEY AIR INLETS

GENERAL

AFT GALLEY HEATING D/O (3)

POWER SUPPLY LOGIC

The heater is powered by the 115 VAC service bus. The 115 VAC is available only if at least one air conditioning pack operates and galley power is "ON" provided the cargo loading is not operating.

G7508471 - G3NT1T0 - FM21DJ000000001

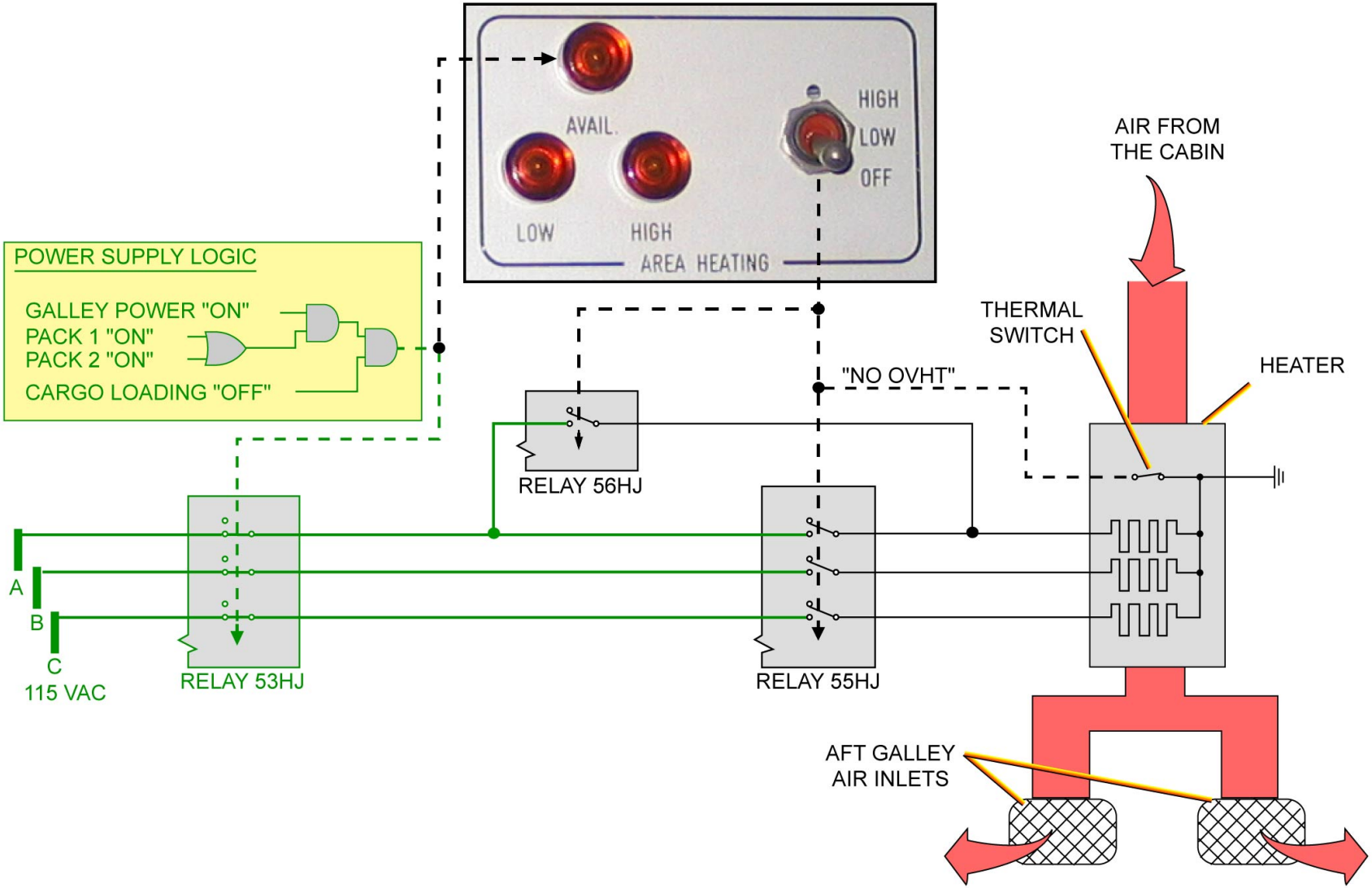

POWER SUPPLY LOGIC

AFT GALLEY HEATING D/O (3)

CONTROL AND INDICATING

As soon as all the heater supply initial conditions are fulfilled, the "AVAIL" indication illuminates on the aft GALLEY AREA HEATING panel meaning that the heater is available.
Two temperature settings (LOW or HIGH) can be selected through two p/b switches located on the GALLEY AREA HEATING panel.
The "LOW ON" selection powers one heating element while the "HIGH ON" selection powers the three elements.

G7508471 - G3NT1T0 - FM21DJ000000001

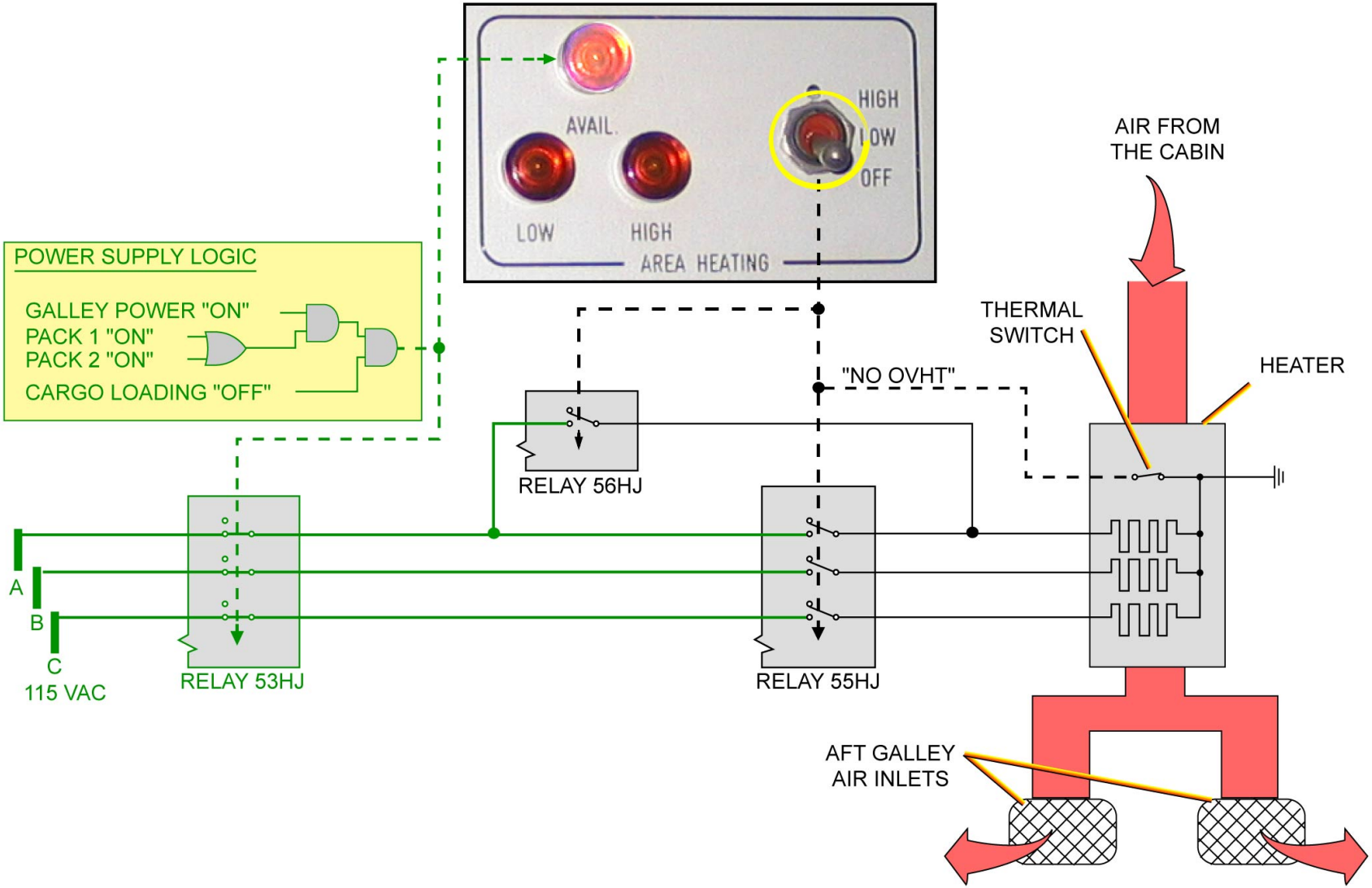

CONTROL AND INDICATING

G7508471 - G3NT1T0 - FM21DJ000000001

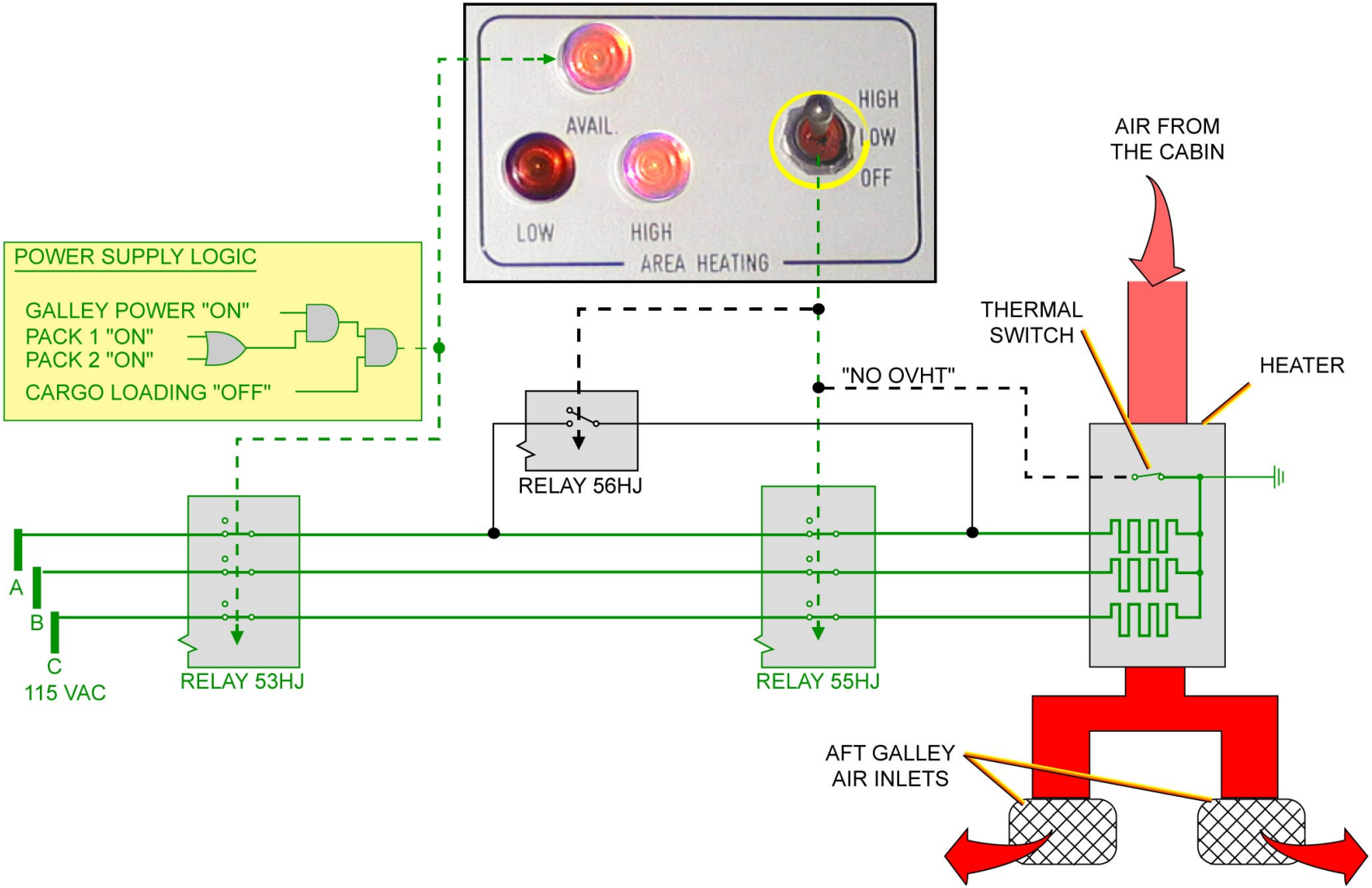

CONTROL AND INDICATING

This Page Intentionally Left Blank

G7508471 - G3NT1T0 - FM21DJ000000001

AFT GALLEY HEATING D/O (3)

THERMAL PROTECTION

In case of heater overheat the thermal switch opens. This causes the heater supply to be interrupted. The "AVAIL" indication on the GALLEY AREA HEATING panel will extinguish as long as the overheat exists.

G7508471 - G3NT1T0 - FM21DJ000000001

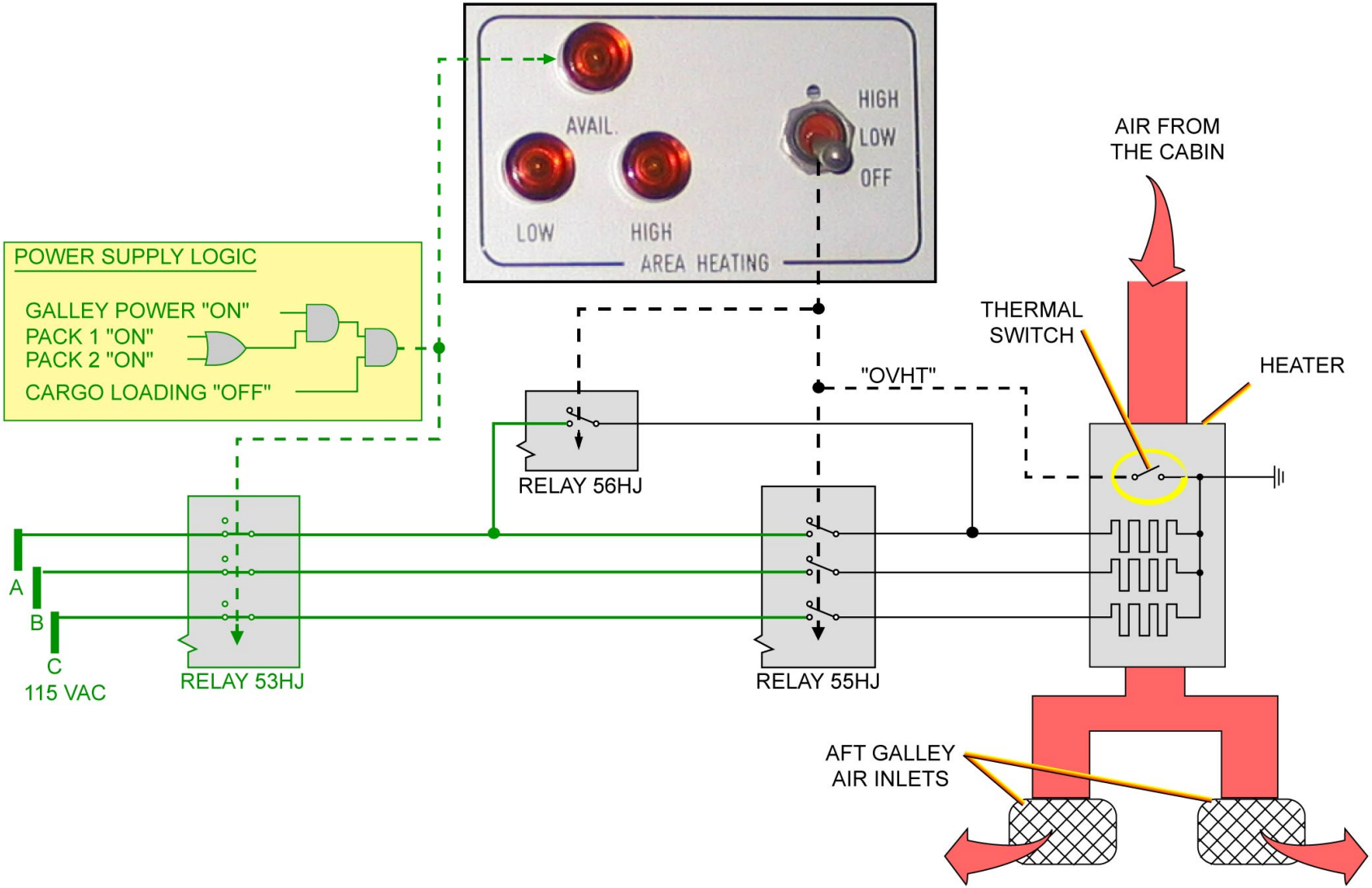

THERMAL PROTECTION

FWD CARGO COMPT VENT/TEMP CTL SYS D/O (3)

GENERAL

The forward cargo compartment is ventilated by cabin air, cooled by cold air from pack 2 and heated by hot air from trim air Pressure Regulating Valve (PRV) 1. The temperature of the forward cargo compartment is controlled from the overhead panel in the cockpit.

INLET ISOLATION VALVES

The inlet isolation valves allow cabin air, from openings in the cabin floor, to enter the compartment. Control is achieved, via the Ventilation Controller (VC), by the ISOLation VALVES P/BSW. To isolate the cargo compartment, the isolation valves close if DITCHING is selected or if smoke is detected in the compartment.

TRIM AIR VALVE

Heating regulation is achieved by a trim air valve, which allows hot air to be mixed with cabin air. The VC controls the trim air valve through a stepper motor according to cockpit control selection.
The trim air valve closes if:
- the FWD cargo compartment door is opened from the Proximity Switch Control Unit (PSCU),
- the extraction fan is inoperative,
- duct overheat is detected,
- FWD cargo smoke is detected by the Smoke Detector Control Unit (SDCU),
- there is no hot air supply when trim air PRV 1 and trim air Shut-off Valve (SOV) closed, from the Zone Controller (ZC).

COLD AIR VALVE

Cooling regulation is achieved by a cold air valve, which allows cold air to be mixed with cabin air. The cold air valve is controlled by the VC according to the cockpit cooling selector position.
The valve closes in case of:
- ISOL VALVES or COOLING OFF selection,
- DITCHING configuration,
- both flow control valves closed,
- FWD cargo smoke warning,
- extraction fan inoperative,
- one isolation valve closed.

When NORMal or MAXimum is selected, the ZC receives signals to increase the flow delivered by the pack flow control valves.

OUTLET ISOLATION VALVE

The outlet isolation valve allows air to be sent overboard via the FWD outflow valve. Control is achieved, via the VC, by the ISOL VALVES P/BSW. To isolate the cargo compartment, it closes if DITCHING is selected or if smoke is detected in the FWD cargo compartment.

EXTRACTION FAN

The two-speed extraction fan extracts the FWD cargo compartment air. It operates provided normal or max cooling is selected and both flow control and isolation valves are open. High speed is only used when NORM or MAX cooling is selected, and both pack flow control valves and isolation valves are open.

TEMPERATURE SENSORS

Two dual duct temperature sensors and one dual compartment temperature sensor send temperature signals to the VC for temperature control and duct overheat detection. The VC sends a FWD cargo duct overheat signal to the ZC in order to close the trim air PRV 1 and the trim air SOV, if open.

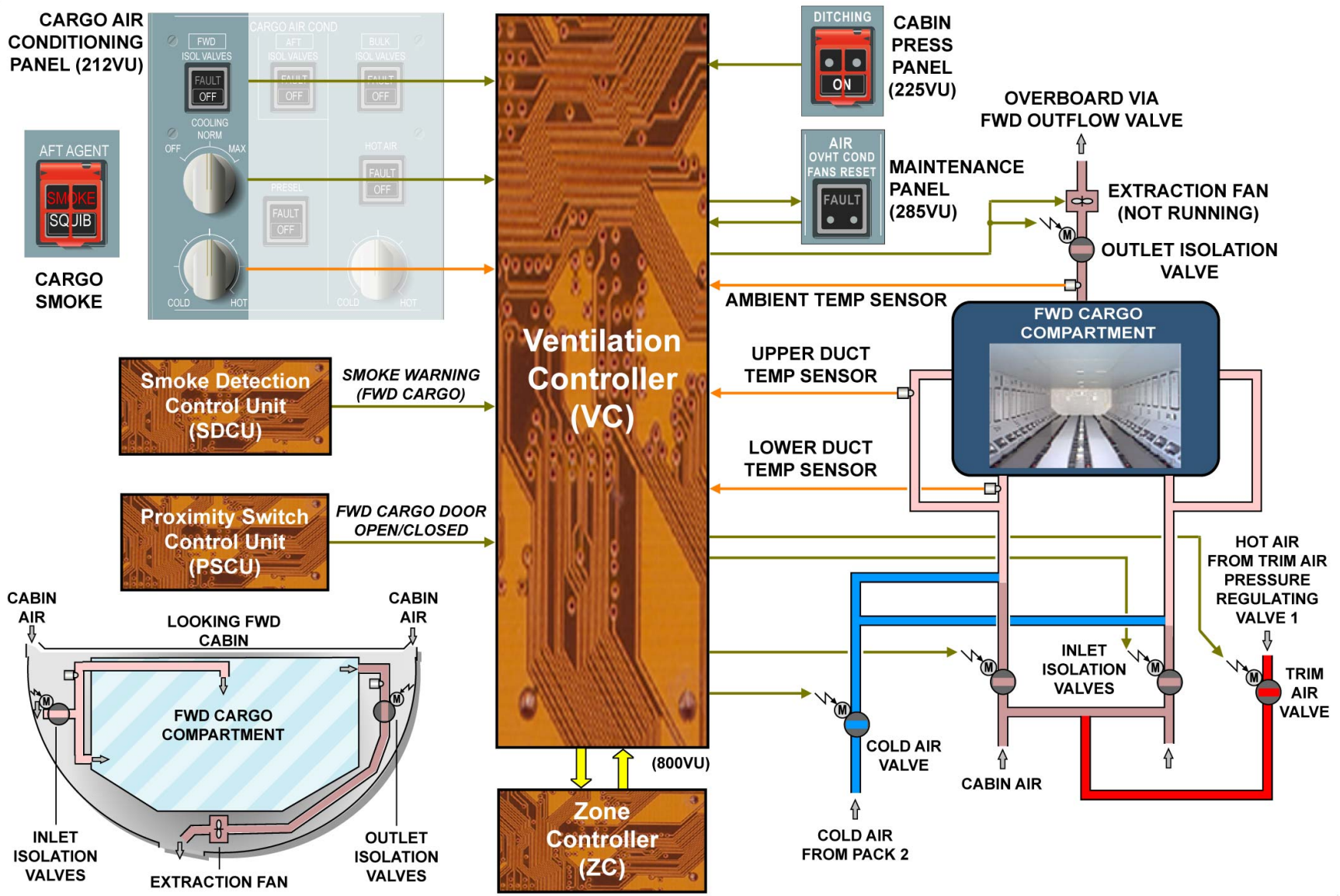

GENERAL ... TEMPERATURE SENSORS

G7508471 - G3NT1T0 - FM21DH000000001

AFT CARGO COMPT VENT D/O (3)

GENERAL

The aft cargo compartment is ventilated with cabin air.

INLET ISOLATION VALVES

The inlet isolation valves allow cabin air, from openings in the cabin floor, to enter the compartment. Control is achieved, via the ventilation controller, by the ISOL VALVES pushbutton switch.
To isolate the cargo compartment, they close if DITCHING is selected or if smoke is detected in the aft or bulk cargo compartment.

EXTRACTION FAN

The extraction fan extracts the air from the cargo compartment.
The extraction fan operates provided at least one inlet isolation valve is open and the outlet isolation valve is open. It stops if smoke detected in the aft or bulk cargo compartment.

OUTLET ISOLATION VALVE

The outlet isolation valve allows the air to be ducted overboard through the aft outflow valve. Control is achieved, via the ventilation controller, by the ISOL VALVES pushbutton switch.
To isolate the cargo compartment, it closes if DITCHING is selected or if smoke is detected in the aft or bulk cargo compartment.

G7508471 - G3NT1T0 - FM21DK000000001

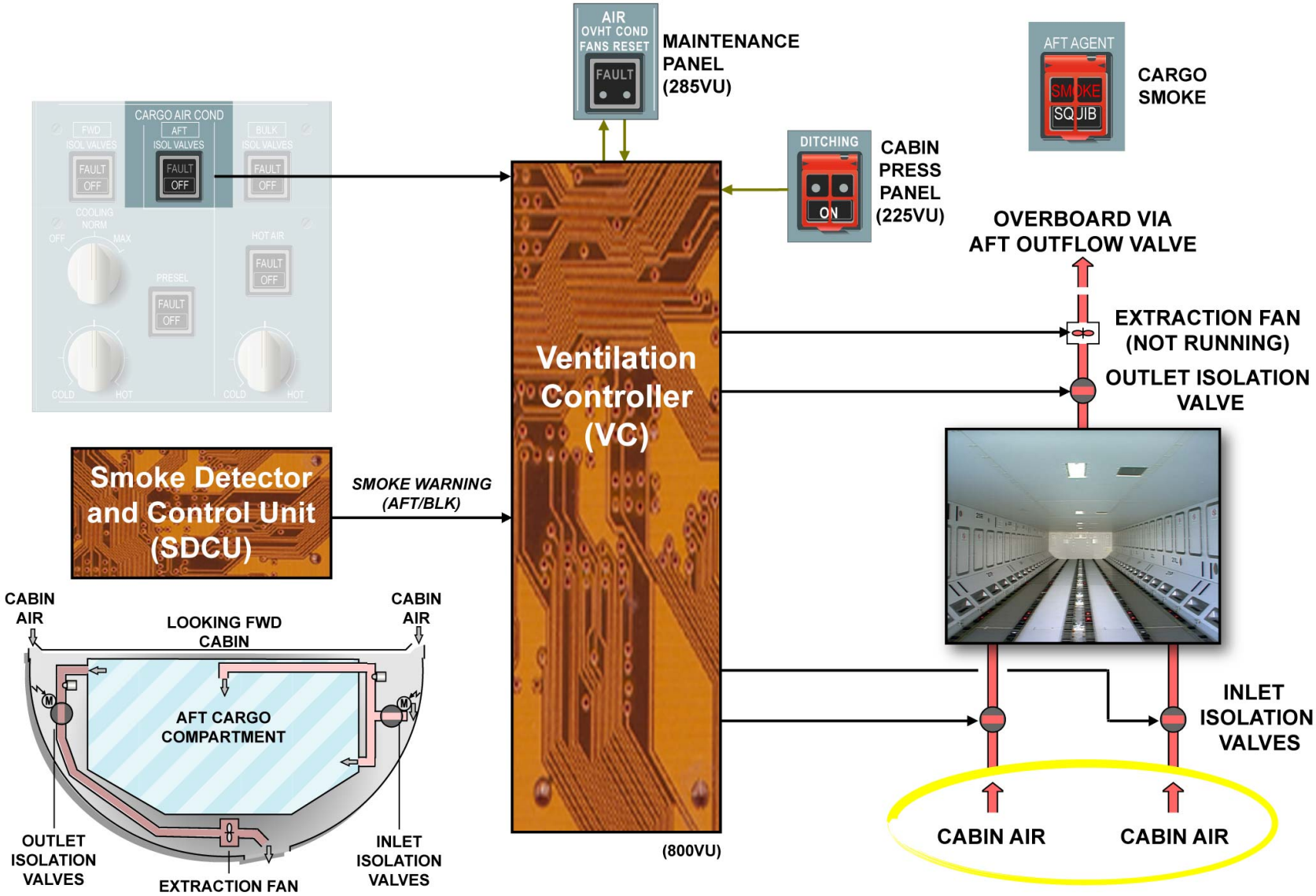

GENERAL ... OUTLET ISOLATION VALVE

G7508471 - G3NT1T0 - FM21DK00000001

BULK CARGO COMPT VENT/HEATING D/O (3)

SYSTEM DESCRIPTION

The system performs the:
- bulk cargo compartment ventilation control and monitoring,
- bulk cargo compartment heating control and monitoring,
- bulk cargo compartment component monitoring,
- abnormal/degraded operation handling.

VENTILATION CONTROLLER (VC)

The Ventilation Controller (VC) contains two independent computer lanes, each of which is able to perform all control, monitoring and BITE functions. One of these lanes is designated as being "active" while the other lane remains in a passive "hot-standby" mode. An automatic changeover occurs at the end of each flight or during the flight, if there is a failure in the active lane. Should a fault exist in both lanes, active control will be passed to the lane with the least significant fault. A covered RS232 test equipment connector is fitted to the controller. The VC provisions are defined through pin programming.

ISOLATION VALVES

Each isolation valve is a shut-off butterfly valve. It is mechanically actuated by a 28V DC motor and electrically controlled from the VC. The valve has two positions and is fitted with two limit switches for Fully Closed (FC)/Fully Open (FO) position detection. The valve also has a thermal overheat protection. A manual lever shows the valve position and makes manual overriding possible.

EXTRACTION FAN

The bulk cargo compartment extraction fan is a single speed fan. It is driven by a three-phase induction motor and controlled from the VC. Thermal switches are installed to stop the electrical power supply to the induction motor if the temperature increases to 140 °C (284 °F) or more.

FAN HEATER

For the bulk cargo compartment heating, an electrical fan heater is installed in the inlet duct of the bulk ventilation system. The fan heater has two three-phase electrical heater element blocks and a three-phase motor. The motor drives a fan wheel that causes air to flow through the fan heater. The temperature control function and the equipment monitoring is done by the VC according to the cockpit panel selection. The heater elements are power supplied by 115V AC. Thermal switches ensure overheat protection by cutting off the power supply to the elements.

DUCT/COMPARTMENT TEMPERATURE SENSORS

Two sensors measure the air temperature throughout the system. The duct temperature sensor (1) measures the air temperature in the inlet duct. The compartment temperature sensor (2) measures the air temperature at the compartment ceiling. Both sensors are double element-sensing units of the thermistor type. They give duct and compartment temperature feedback to the VC for heating control, temperature monitoring and indicating.

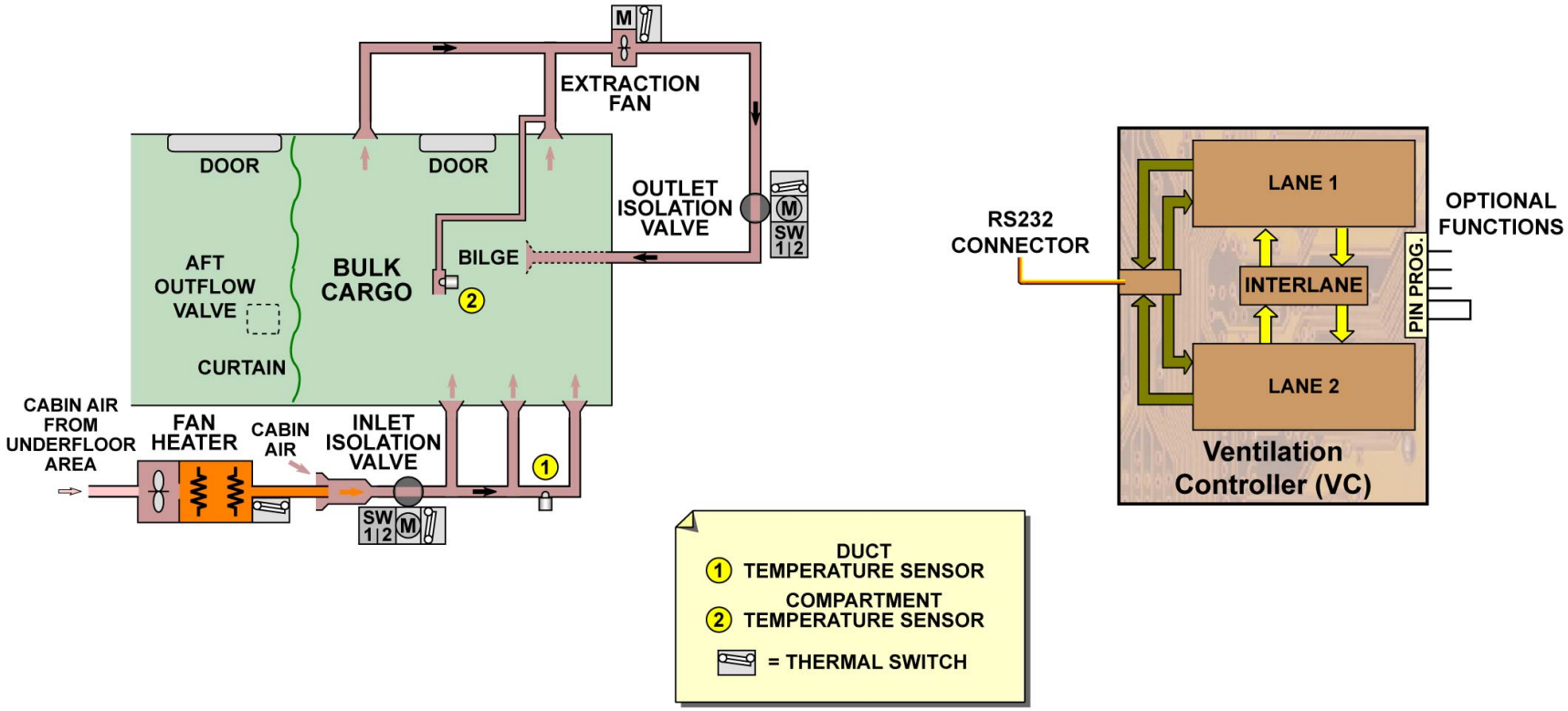

SYSTEM DESCRIPTION - VENTILATION CONTROLLER (VC) ... DUCT/COMPARTMENT TEMPERATURE SENSORS

BULK CARGO COMPT VENT/HEATING D/O (3)

VENTILATION SYSTEM NORMAL OPERATION

The VC automatically controls the ventilation system. In normal conditions, the VC controls both isolation valves to open provided the BULK ISOLation VALVES P/BSW is pressed in. As soon as the isolation valves are FO, the VC switches on the extraction fan power supply. The VC monitors:
- the position of the isolation valves,
- the extraction fan power feedback.

HEATING SYSTEM NORMAL OPERATION

The VC automatically controls the heating system. In normal conditions, the VC switches on the fan heater power supply, provided the HOT AIR P/BSW is pressed in. The VC triggers bulk air heating if:
- the isolation valves are FO,
- the compartment temperature is lower than the selected temperature.

The VC defines a required heating performance based on:
- the selected temperature,
- the compartment temperature,
- the fan heater temperature.

The VC controls one heater-element block with a pulse-width-modulated signal. It gives a continuous heating performance between 0 and 3 kW. If the required heating performance exceeds this value, the VC switches on a second block with a constant performance of 3 kW, thus allowing a continuous performance between 0 and 6 kW.
The VC monitors:
- the duct temperature,
- the compartment temperature,
- the fan heater power feedback.

VENTILATION SYSTEM ABNORMAL/DEGRADED OPERATION

The bulk cargo compartment ventilation is shut down in case of:
- manual ventilation off command,
- smoke warning,
- ditching,
- emergency configuration,
- isolation valve failed closed,
- fan failure,
- fan overheat.

MANUAL VENTILATION OFF COMMAND

As soon as the BULK ISOL VALVES P/BSW is released out, the OFF light comes on. The VC stops the extraction fan and controls both isolation valves to close until they have reached their FC position.

SMOKE WARNING

When the Smoke Detection Control Unit (SDCU) triggers an AFT/BULK smoke warning, the VC automatically closes both isolation valves and the extraction fan stops.

DITCHING

When the DITCHING P/BSW is set to ON, a discrete signal is sent to the VC to close the isolation valves.

AIRCRAFT EMERGENCY CONFIGURATION

Two electrical aircraft emergency configuration signals coming from a relay logic are used to stop the extraction fan and the fan heater.

VALVE POSITION DISAGREEMENT

When any isolation valve position disagrees with the command, the VC triggers the FAULT light on the BULK ISOL VALVES P/BSW. The VC also triggers an ECAM warning message on the EWD. The

G7508471 - G3NT1T0 - FM21DACRGBULK02

extraction fan is automatically switched off if at least one isolation valve has failed closed.

FAN FAILURE

If no power feedback is received, the VC switches off the extraction fan and triggers an ECAM warning message on the EWD.

FAN OVERHEAT/RESET

If there is a fan overheat, the FAULT light on the OVerHeaT CONDition FANS RESET P/BSW comes on and the extraction fan stops. If the overheat has gone, the extraction fan can be reset by pushing the OVHT COND FANS RESET P/BSW. As a consequence, the FAULT light goes off and the extraction fan starts again.

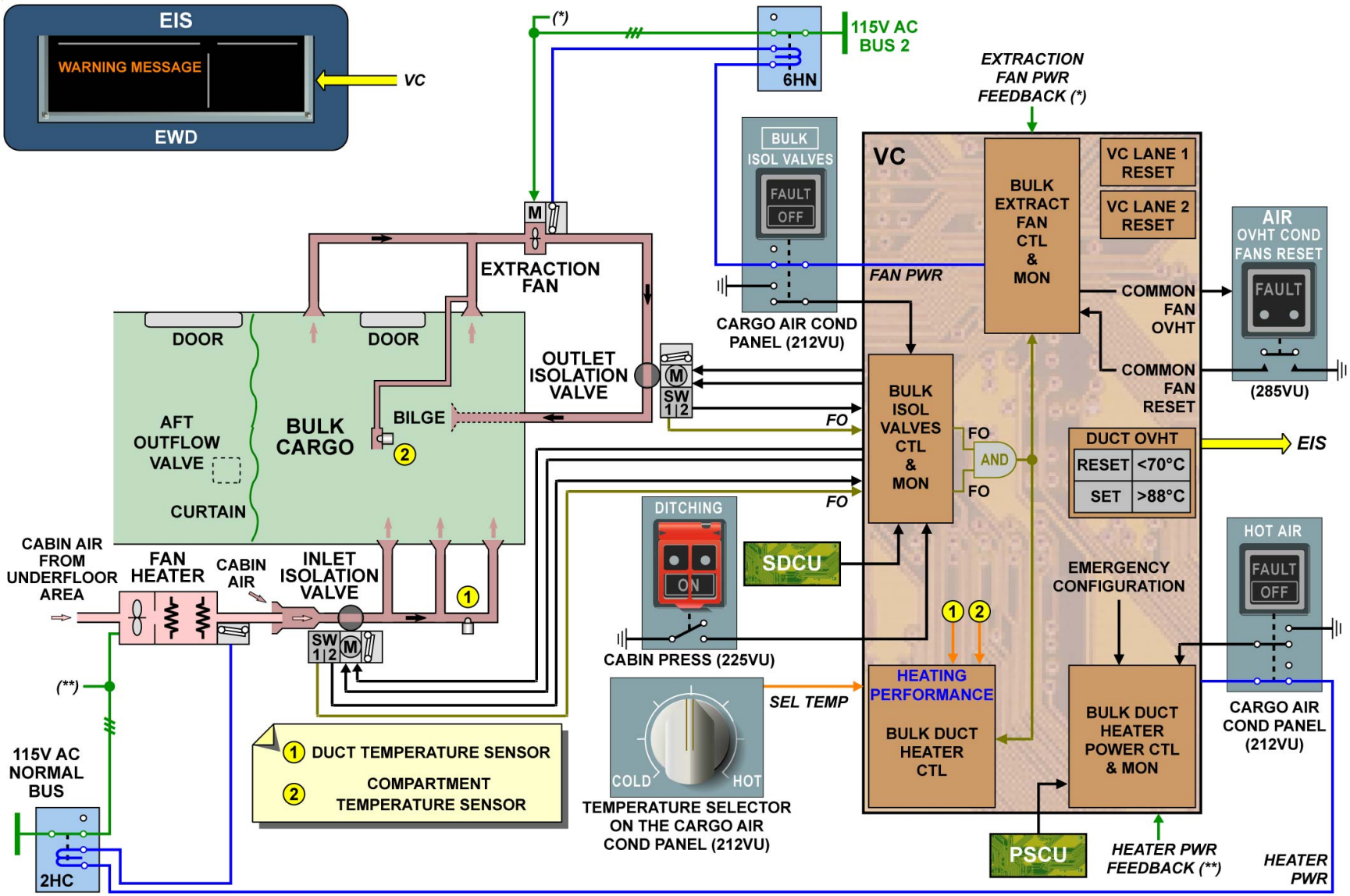

VENTILATION SYSTEM NORMAL OPERATION ... VENTILATION SYSTEM ABNORMAL/DEGRADED OPERATION

G7508471 - G3NT1T0 - FM21DACRGBULK02

This Page Intentionally Left Blank

G7508471 - G3NT1T0 - FM21DACRGBULK02

BULK CARGO COMPT VENT/HEATING D/O (3)

HEATING SYSTEM ABNORMAL/DEGRADED OPERATION

The heating system stops in case of:
- manual heating off command,
- bulk cargo door opening,
- ventilation not operative,
- emergency configuration,
- fan heater failure,
- duct overheat.

MANUAL HEATING OFF COMMAND

As soon as the HOT AIR P/BSW is released out, the OFF light comes on and the VC switches off the fan heater power supply.

BULK CARGO DOOR OPENING

As long as the Proximity Switch Detection Unit (PSCU) detects a bulk cargo door open, the VC stops the fan heater operation.

VENTILATION NOT OPERATIVE

As long as one of the two isolation valves are Not Fully Open (NFO), the VC stops the fan heater operation.

EMERGENCY CONFIGURATION

If the A/C is in an emergency configuration (loss of all four main AC bus bars), the VC switches off the fan heater power supply.

FAN HEATER FAILURE

If no power feedback is received, the VC switches off the fan heater power supply and triggers an ECAM warning message on the EWD.

DUCT OVERHEAT

A duct overheat condition is set as soon as the duct temperature, sensed by the duct temperature sensor (1), rises above 88°C. The VC latches the duct overheat condition and automatically switches off the fan heater power supply. The VC will trigger:
- a FAULT light on the HOT AIR P/BSW,
- an ECAM warning message on the EWD,
- an amber duct temperature indication on the ECAM COND page.

Provided the duct temperature drops below 70°C, the duct overheat can be reset by using the HOT AIR P/BSW. When the HOT AIR P/BSW set to OFF, the FAULT light on the HOT AIR P/BSW goes off and the fan heater is enabled to start again.

VC FAILURE

All control and monitoring functions remain if one lane has failed. The other lane takes over and triggers:
- an ECAM warning message on the EWD,
- an amber VC lane indication on the ECAM COND page.

The faulty VC lane can be reset from the dedicated VENT CONT LANE reset button located on the RESET panel.
A full VC failure or VC power supply loss leads to the extraction fan and fan heater shutdown but the isolation valves remain in their last position. Indications about the bulk cargo compartment heating system are no longer available on the ECAM COND page. Moreover, the EIS triggers an ECAM warning message on the EWD.

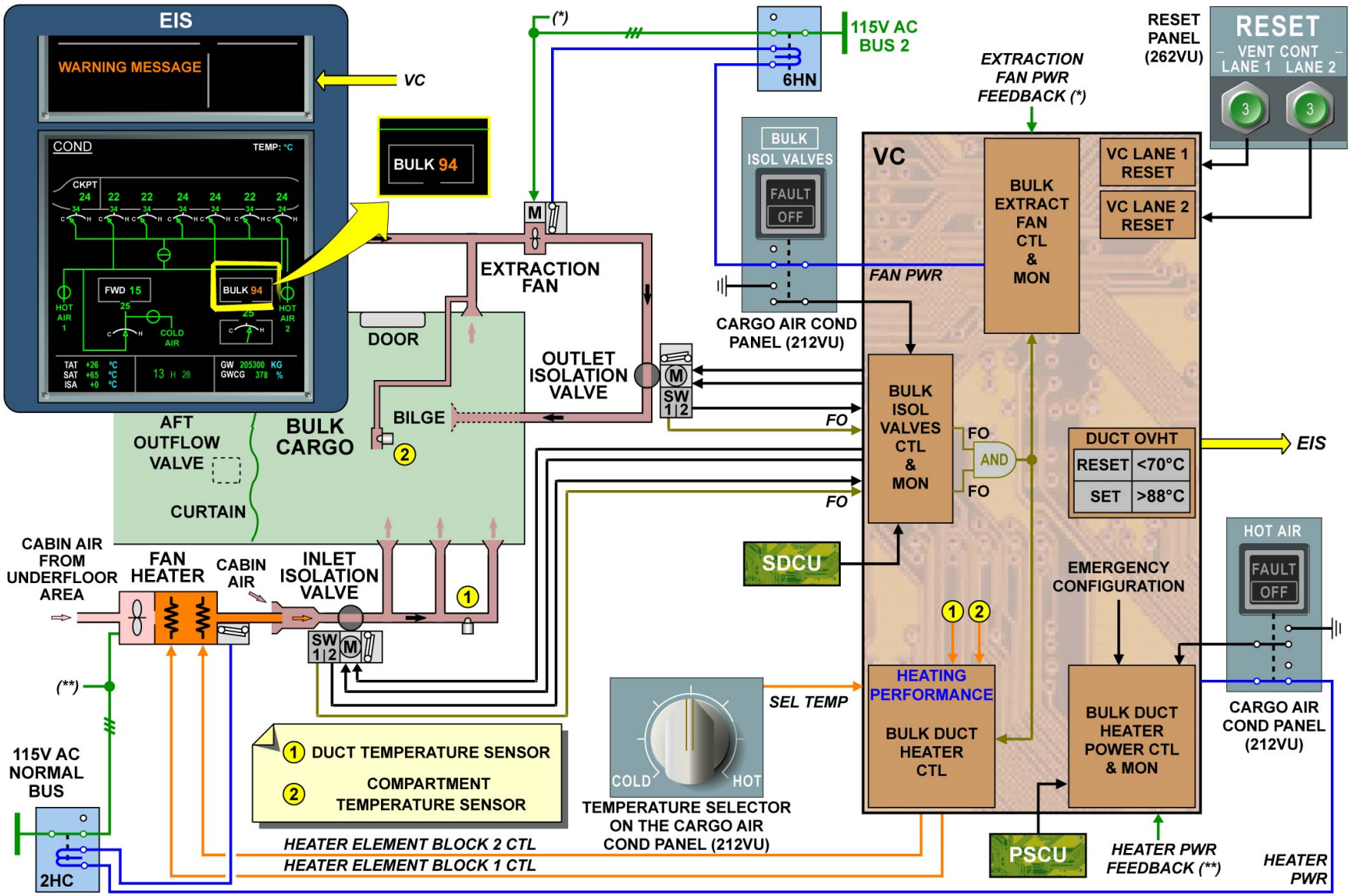

HEATING SYSTEM ABNORMAL/DEGRADED OPERATION & VC FAILURE

G7508471 - G3NT1T0 - FM21DACRGBULK02

PRESSURIZATION SYSTEM D/O (3)

GENERAL

The amount of cabin air discharged overboard is controlled for the cabin pressurization. This is achieved through two outflow valves located on the lower part of the aircraft fuselage. This system can be operated automatically, manually or both.

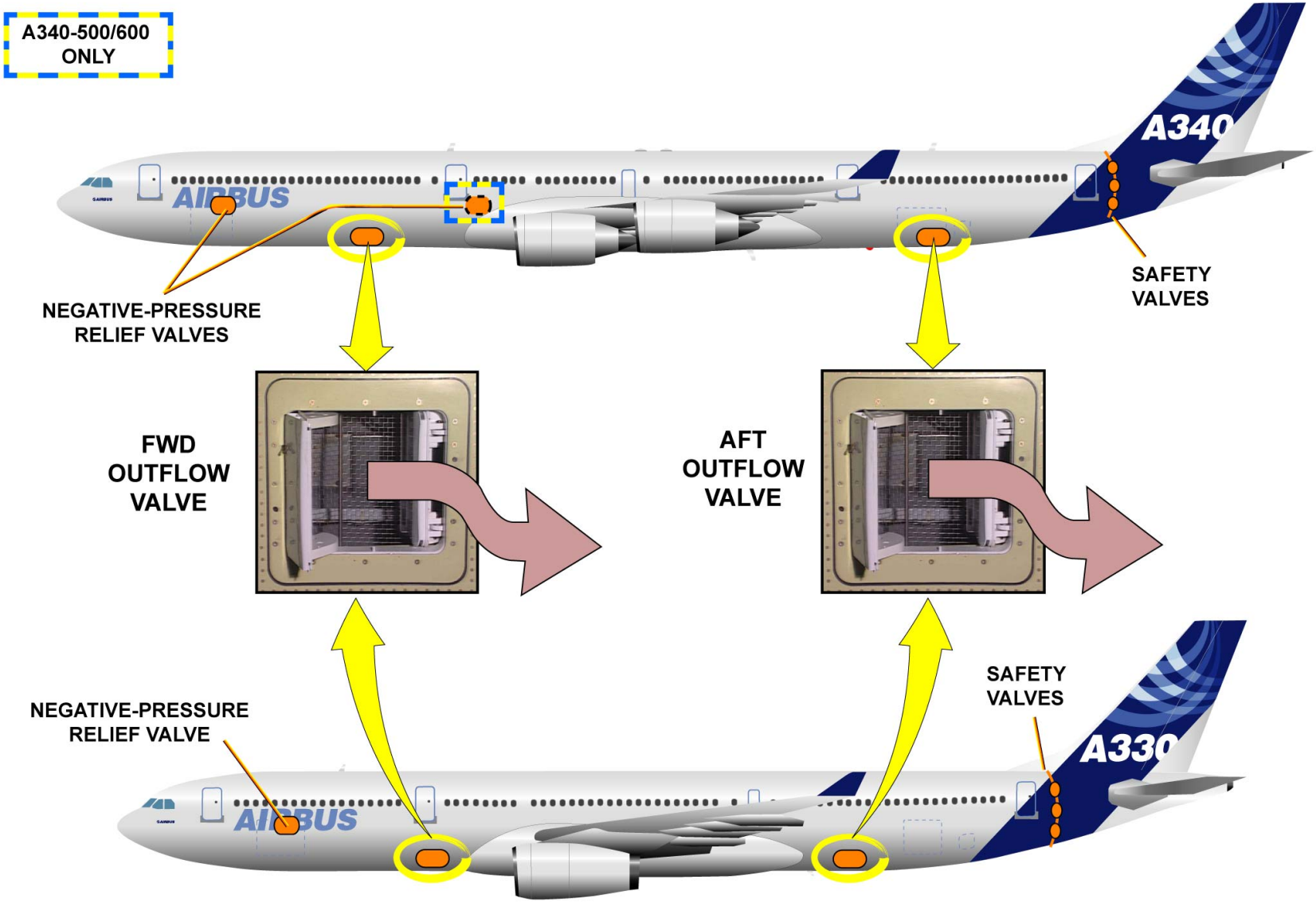
A340-500/600
ONLY
A340
AIRBUS
NEGATIVE-PRESSURE
RELIEF VALVES
SAFETY
VALVES
FWD
OUTFLOW
VALVE
AFT
OUTFLOW
VALVE
NEGATIVE-PRESSURE
RELIEF VALVE
SAFETY
VALVES
A330
AIRBUS

GENERAL

PRESSURIZATION SYSTEM D/O (3)

GENERAL (continued)

SYSTEM ARCHITECTURE

Each outflow valve can be operated by 3 different systems:
- automatic system 1,
- automatic system 2,
- a manual system.

There are 2 types of safety device which operate independently:
- two negative pressure relief valves for the A340-500/600, one negative pressure relief valve for the A330/A340-200/300, which prevents negative differential pressure in the fuselage. They are mechanically spring-loaded closed valves,
- three safety valves which prevent excessive positive or negative differential pressure in the fuselage installed on the aft pressure bulkhead. The safety valves operate pneumatically.

SYSTEM CONTROLS

In automatic operation, outflow valves are alternatively operated by system 1 or system 2. The Cabin Pressure Controller 1 (CPC 1) controls the System 1. The CPC 2 controls the System 2.
There are 2 automatic modes:
- the external mode pressurizes the cabin according to the Flight Management Guidance and Envelope System (FMGES) data during climb and descent. It optimizes passenger comfort,
- the internal mode pressurizes the cabin according to ambient parameters.

The CPCs automatically close both outflow valves in case of ditching selection.
In manual operation, the manual system is controlled from the CABIN PRESSurization panel. It is activated when the MODE SELection P/BSW is selected to the MANual ON position. The outflow valves can be simultaneously or independently selected through the VALVE SEL switch and operated by action on the Vertical/Speed ConTroL toggle switch.

G7508471 - G3NT1T0 - FM21DI000000001

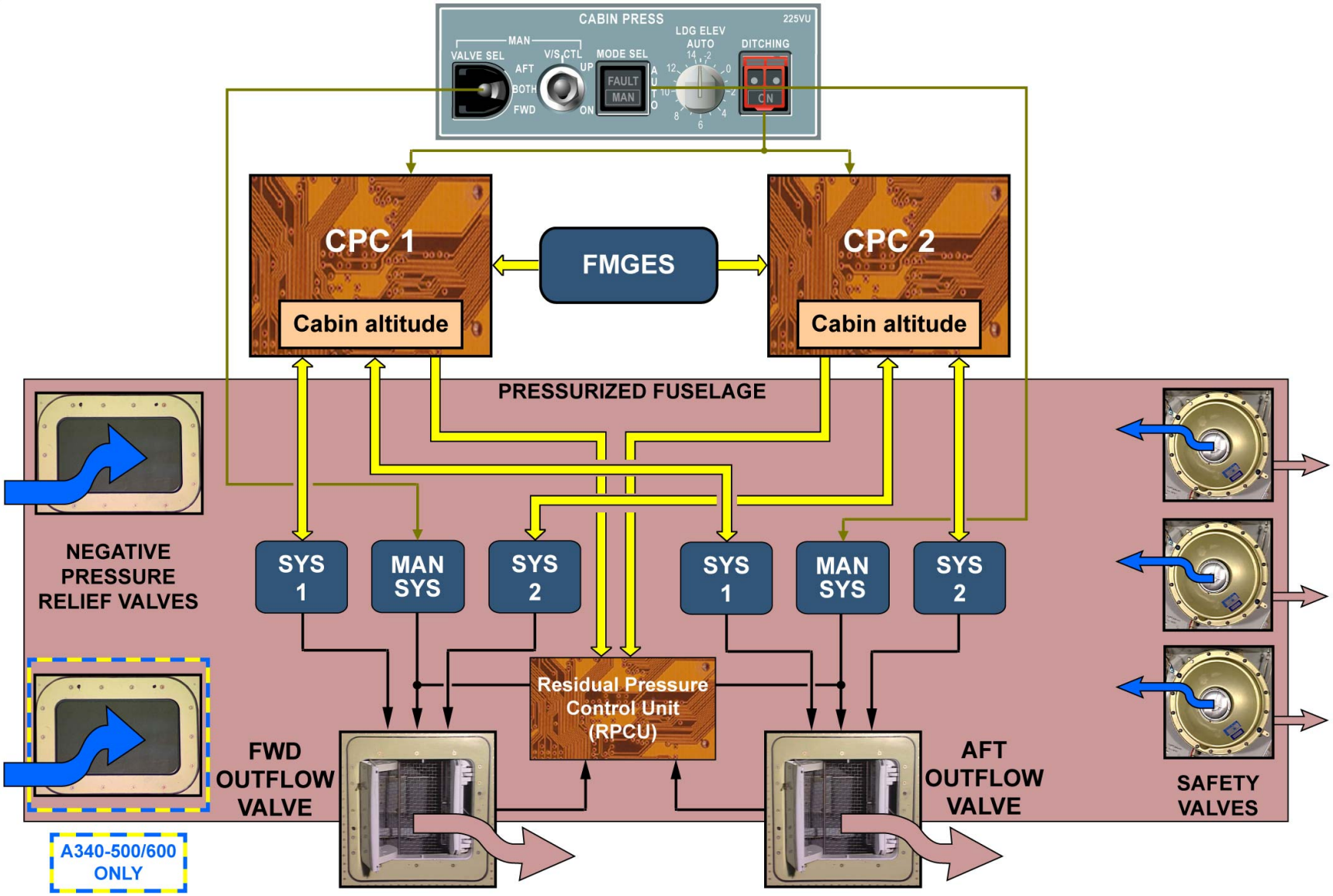

GENERAL - SYSTEM ARCHITECTURE & SYSTEM CONTROLS

G7508471 - G3NT1T0 - FM21DI000000001

PRESSURIZATION SYSTEM D/O (3)

GENERAL (continued)

SYSTEM MONITORING

The CPCs monitor the position of the outflow valves and safety valves. The valve position indications are shown on the ECAM CAB PRESS page. Automatic system failures are displayed on the MODE SEL P/BSW.

NOTE: The three safety valves are monitored by the CPC's.

G7508471 - G3NT1T0 - FM21DI000000001

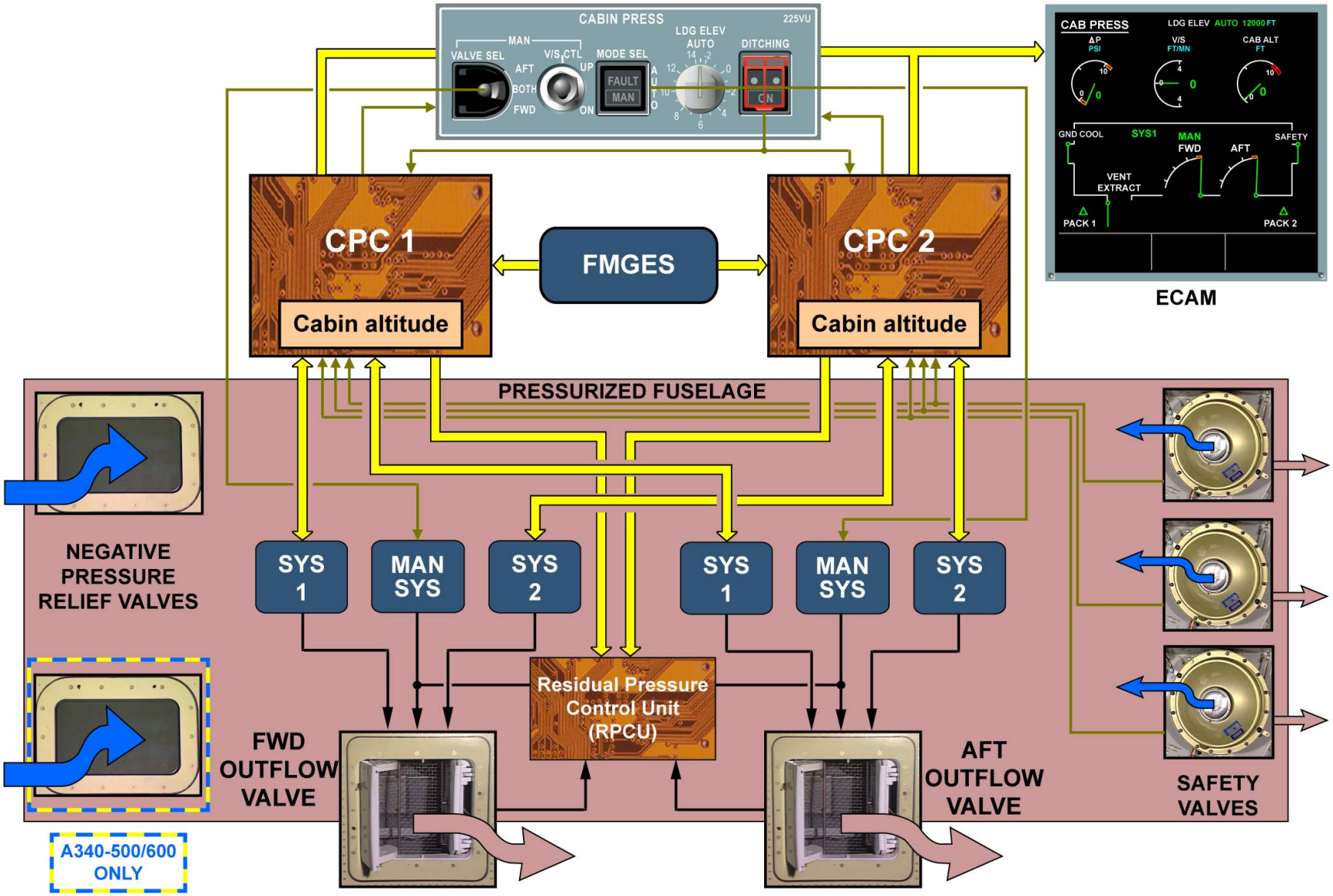

GENERAL - SYSTEM MONITORING

G7508471 - G3NT1T0 - FM21DI000000001

PRESSURIZATION SYSTEM D/O (3)

CPC

There are two interchangeable controllers, which are identified as CPC 1 and CPC 2 by means of a pin programming. Each controller has an automatic and manual part which are functionally and electronically independent of each other. One controller operates the system at a time according to flight profile data and A/C configurations. The second controller is in active stand- by with automatic change over after each flight or in case of failure of the active one.
The CPCs inputs are:
- flight profile data: FMGES, Air Data/Inertial Reference System (ADIRS) and Onboard Maintenance System (OMS),
- A/C configurations: Engine Interface and Vibration Monitoring Unit (EIVMU), Landing Gear Control and Interface Unit (LGCIU), Proximity Switch Control Unit (PSCU) and Environmental Control System (ECS).
The CPCs outputs data for indicating and monitoring are: ECAM, ECS and OMS.
When manual mode is used, the manual part of controller 1 operates only as a back-up indication circuit processing outputs for indicating and monitoring. CPC 1 manual part outputs for monitoring and indicating are: ECAM, ECS and OMS. CPC 2 manual part is not used.

OUTFLOW VALVES

The operating controller controls the outflow valves in automatic mode. The two outflow valves are of the double flap and motor driven type. Depending on the operating controller, electrical motor 1 or motor 2 operate each outflow valve:
- motor 1 is controlled by controller 1,
- motor 2 is controlled by controller 2.
Two electronic actuators carry out the interface with the controllers. A pressure switch, which operates independently from the automatic mode, is installed in each electronic actuator. It closes the applicable outflow valve in case of cabin altitude above 15000 ft. Motor 3 is controlled from the CABIN PRESS panel by the MAN V/S CTL toggle switch when manual mode is selected on the MODE SEL P/B.
Both valves may be independently or simultaneously selected by use of the ACTIVE VALVE selector. If only one outflow valve is manually selected, the other one remains under the active CPC control (mixed mode). The corresponding electronic actuator uses automatic mode signal. Manual mode feedback (N°3) signal is directly sent to controller 1 manual part for outflow valve position indication. Controller 2 manual part is not used.

SAFETY VALVES

The safety valves prevent excessive positive and negative differential pressure in the fuselage. They open when the differential pressure exceeds 8.85 psi or goes below -1 psi. They are installed on the rear pressure bulkhead above the A/C flotation line.

NEGATIVE PRESSURE RELIEF VALVE

The negative pressure relief valve helps the safety valves to prevent negative differential pressure in the cabin. It shall start to open between -0.26 and -0.36 psi. It is installed below the floor level aft of left door number 1, above the floating line. The second valve only installed on the A340-500/600 is located below the floor level aft of right door number 2, also above the floating line.

RESIDUAL PRESSURE CONTROL UNIT (RPCU)

The Residual Pressure Control Unit (RPCU) takes over the control of the outflow valves automatically if one or both outflow valves are not in the fully open position when the aircraft is on ground. This is to prevent any door violent opening in case of residual cabin pressure. The RPCU opens each outflow valve via its manual motor when:
- the outflow valve is not fully open, and

G7508471 - G3NT1T0 - FM21DI000000001

- both CPCs have failed, or the manual mode is selected,
- the aircraft is on ground,
- and all engines are shutdown, or all ADIRS indicate an airspeed below 100 knots.

G7508471 - G3NT1T0 - FM21DI000000001

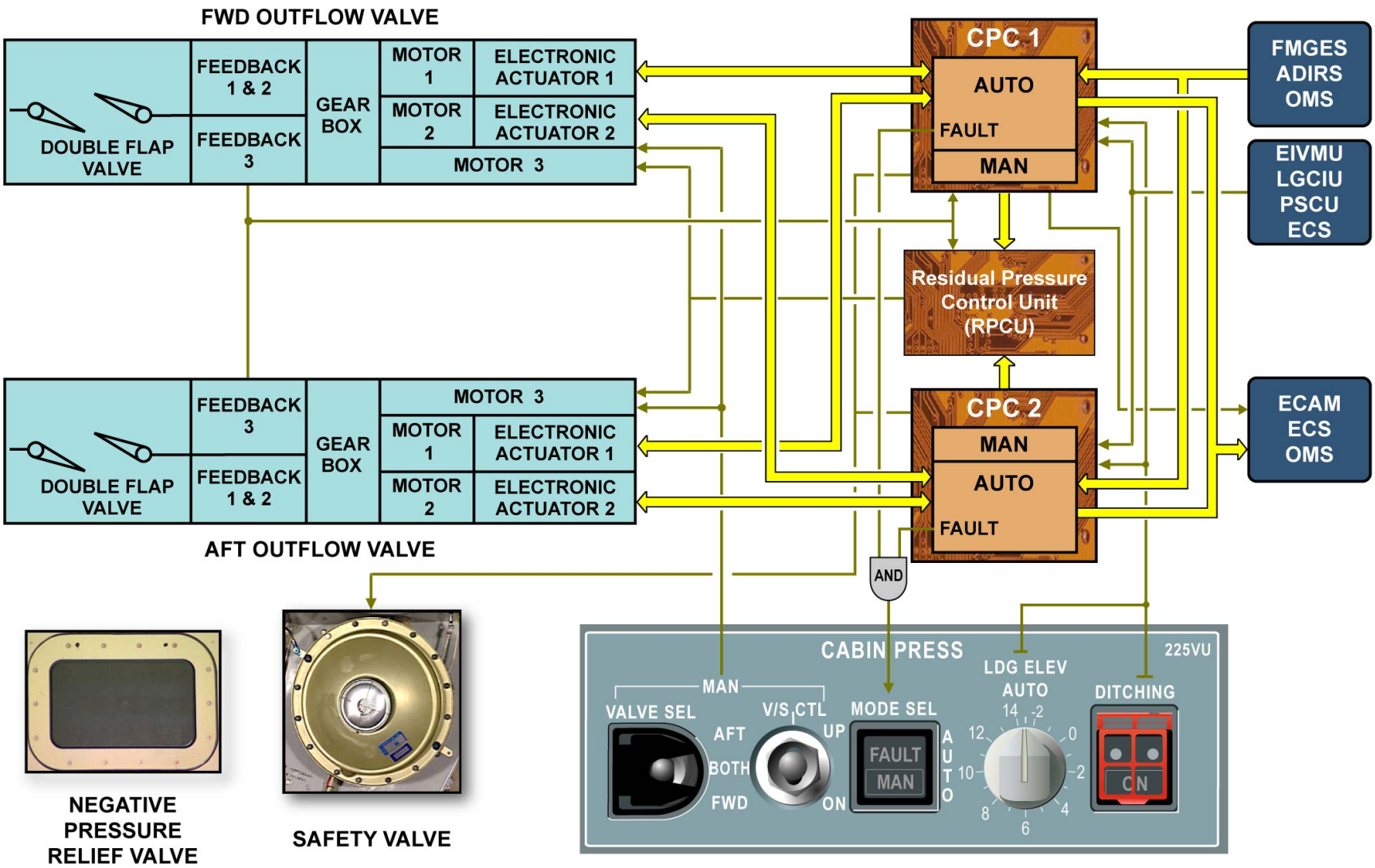

CPC ... RESIDUAL PRESSURE CONTROL UNIT (RPCU)

This Page Intentionally Left Blank

G7508471 - G3NT1T0 - FM21DI000000001

PRESSURIZATION SYSTEM D/O (3)

CABIN PRESSURE ALTITUDE ENVELOPE

The A340 normal cabin altitude is limited to 7350 ft with a differential pressure of 8.60 psi for an A/C altitude of 41000 ft. The A330 normal cabin altitude depends on the flight duration. It is limited for an A/C altitude of 41000 ft to:
- 8000 ft, with a differential pressure of 8.32 psi for flights shorter than 2.5 hours,
- 7350 ft, with a differential pressure of 8.60 psi for flights longer than 2.5 hours.

If the cabin altitude reaches 9550 ft, the master warning comes on, and at 11300 ft, passenger signs are activated. In each outflow valve, a safety device closes the valve when the cabin altitude reaches 15000 ft.

G7508471 - G3NT1T0 - FM21DI000000001

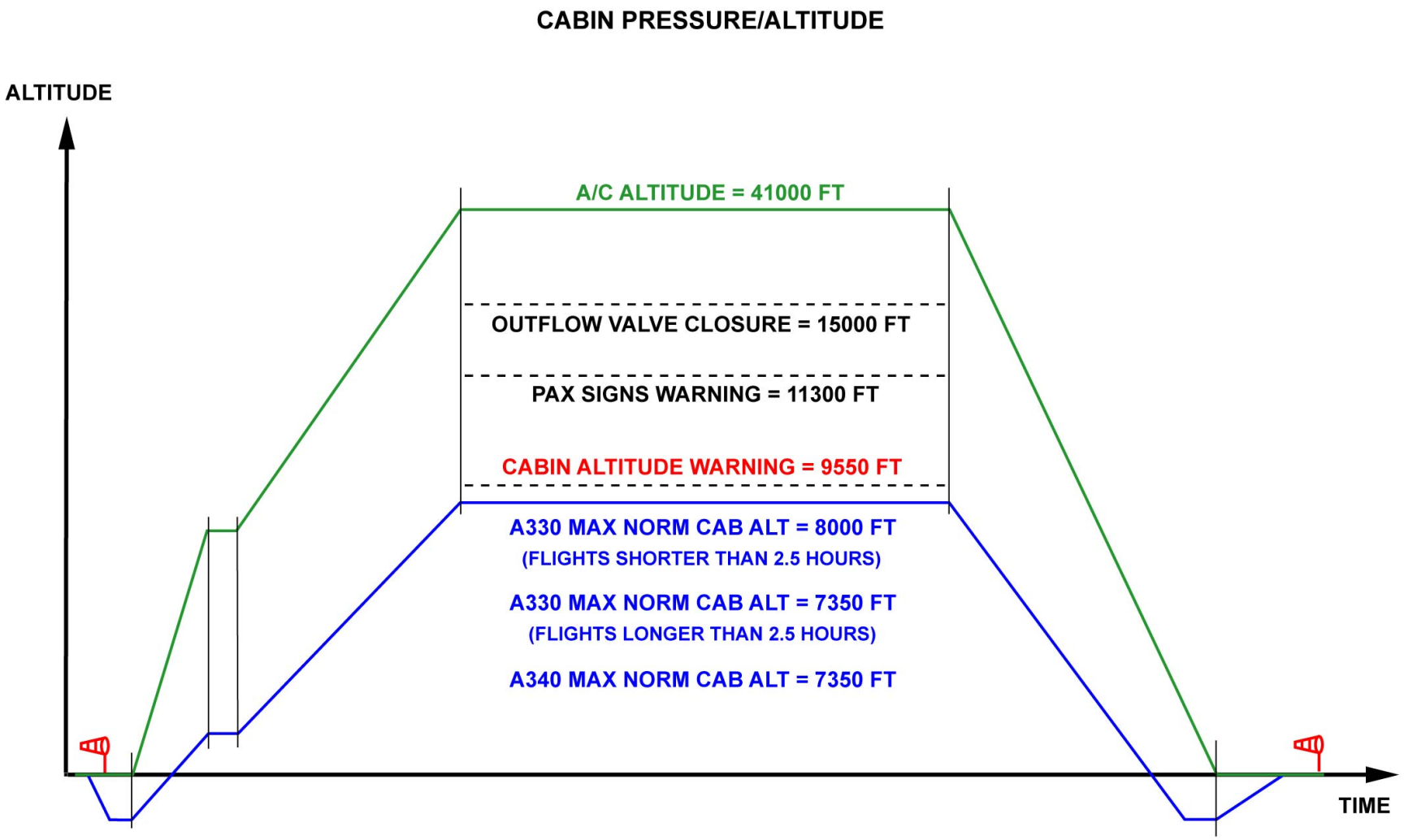

CABIN PRESSURE ALTITUDE ENVELOPE

G7508471 - G3NT1T0 - FM21DI000000001

PRESSURIZATION SYSTEM D/O (3)

FLIGHT PROFILE

This topic describes the normal operation during a typical flight profile:
- take off altitude: 500 ft (QNH),
- landing altitude: 800 ft.
The Landing Field Elevation (LFE) must be set to AUTO position.

NOTE: To display the LFE on the ECAM when the Landing Field Elevation Selector (LFES) is set to AUTO, LFE must be received from the FMGES.

GROUND

On ground, the outflow valves are fully open to make sure that the cabin is depressurized. To indicate the A/C is on ground, a signal is sent when the L/G 1 or 2 is compressed. The Avionics Equipment Ventilation Computer (AEVC) closes the overboard valve and the optional skin valve, when engine 1 or 2 is running for the A330 (engine 2 or 3 for the A340).

TAKE-OFF

The cabin is pre-pressurized as soon as power is set to take off to prevent a pressure surge during rotation. To activate the pre-pressurization, a signal is sent when:
- engine 1 or 2 are set to take off power for the A330 (engine 2 or 3 for the A340),
- main shock absorber 1 or 2 is compressed,
- doors are closed.
The active CPC controls the outflow valves to regulate a fixed cabin rate of descent. The cabin vertical speed (V/S) is 500 ft per minute down until the differential pressure reaches 0.1 psi.

CLIMB

The pressurization is initiated at take-off. The CPC always switches to CLIMB INTERNAL mode for about 30 s to allow the FMGES data validation before going to CLIMB EXTERNAL mode. During this data validation, the FMGES sends, among other things, the remaining flight time to destination to the CPC. This flight duration is computed from the flight plan entered by the crew and used for the maximum normal cabin differential pressure set-up. The active CPC switches to CLIMB INTERNAL when:
- engine 1 or 2 set to take off power for the A330 (engine 2 or 3 for the A340),
- main shock absorbers extended.
After 30 seconds, if FMGES data is validated, the CPC switches to CLIMB EXTERNAL mode.
Pressure control is based on the FMGES inputs taking into account top of climb and planned A/C cruise altitude. During climb the cabin altitude increases at a constant rate, up to the top of climb. Cabin vertical speed is limited to 1000 ft/mn. In case of long level off, the system reverts to CLIMB INTERNAL mode. If FMGES data is not validated, the system will remain in CLIMB INTERNAL mode. This requires the LFE to be set manually. In CLIMB INTERNAL mode, the cabin pressure will follow the ambient pressure evolution according to a proportional schedule. Internal scheduling also makes sure that the maximum cabin differential pressure is not reached during climb.

NOTE: ABORT mode is selected below A/C altitude of 8000 ft if descent rate is higher than 2000 ft/mn for 30 s. The CPC processes an internal schedule in order to land with a differential pressure of 0.1 psi.

CRUISE

The cabin cruise altitude will agree with the highest value computed from A/C planned altitude or actual A/C altitude.

NOTE: The LFE selection takes over from the computed cruise cabin altitude if the LFE is higher.

DESCENT

The CPC always switches to DESCENT INTERNAL mode for about 30 seconds to allow the FMGES data validation before going to DESCENT EXTERNAL mode. If the FMGES data is validated, the CPC switches to the DESCENT EXTERNAL mode after 30 s. The cabin pressurization profile is computed according to the A/C descent speed, landing altitude, field baro setting and remaining time of arrival. The cabin vertical speed is limited to -750 ft/mn. The CPC computes an ideal constant cabin rate in order to reach an altitude lower than the LFE, before landing.
The cabin altitude goes down below the LFE. Then the cabin altitude remains constant with a differential pressure of 0.1 psi. However, the system will remain in DESCENT INTERNAL mode if the FMGES data is not validated at the top of descent. This requires the LFE to be set manually. The cabin pressurization profile is computed according to the ambient pressure, A/C descent speed, manually selected LFE and landing field baro setting. The cabin vertical speed is limited to -750 ft/mn. The cabin rate is adjusted, so that the cabin altitude reaches the selected LFE plus an offset of 0.1 psi prior to landing. The offset carries out a pressurized landing.

GROUND AFTER LANDING

We are now entering into the depressurization phase. To activate the depressurization, a signal is sent when landing gear 1 or 2 is compressed. The cabin is depressurized at a fixed rate until the differential pressure reaches 0 psi. The rate limiter is overridden and the outflow valves are driven fully open, 70 s after touchdown to make sure that the cabin is fully depressurized. At the same time, a controller change over occurs automatically.

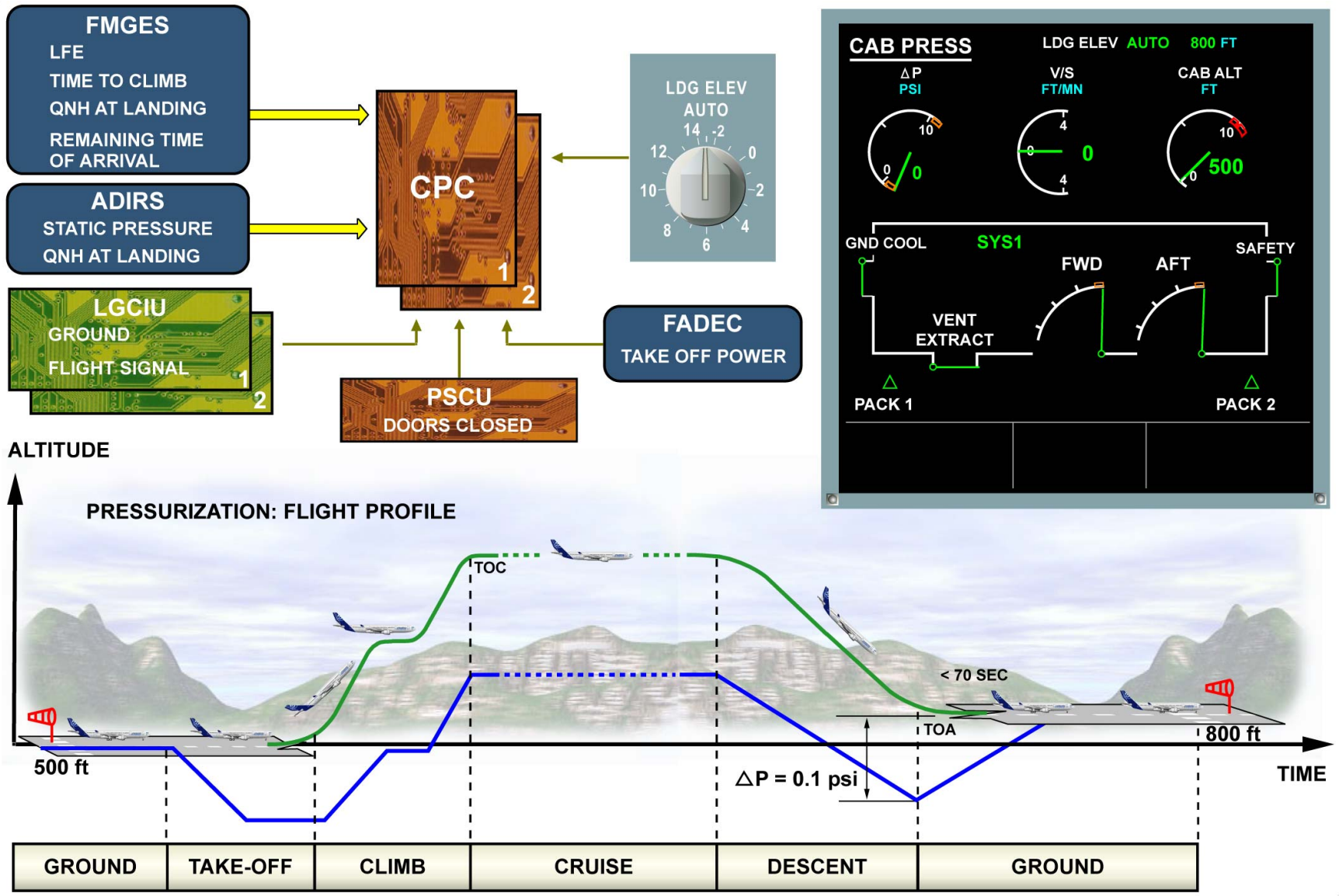

FLIGHT PROFILE - GROUND ... GROUND AFTER LANDING

G7508471 - G3NT1T0 - FM21DI000000001

This Page Intentionally Left Blank

G7508471 - G3NT1T0 - FM21DI000000001

AVIONICS EQUIPMENT VENTILATION D/O (3)

GENERAL

The system ensures the ventilation of the avionics equipment in order to guarantee a high reliability level. This is done in compliance with the ARINC 600 requirements. The main items of equipment which are ventilated in the cockpit are:
- the Display Units (DU),
- the Flight Control Unit (FCU),
- the pedestal,
- the overhead panel,
- the cockpit temperature sensor.

The main items of equipment which are ventilated in the avionics compartment are:
- the electronics racks,
- the weather radar shelf,
- the AC/DC power center,
- the forward shelf,
- the Air Data/Inertial Reference Units (ADIRUs),
- the batteries.

The avionics equipment ventilation includes three main subsystems:
- the blowing system,
- the battery ventilation system,
- the extraction system.

BLOWING SYSTEM

The required blowing airflow is bled from the cabin air recirculation system. UNDER NORMAL CONDITIONS the recirculation fans supply the system with the required airflow. The Cooling Effect Detector (CED) ensures permanent monitoring of the cooling capacity of the blowing airflow.

BATTERIES VENTILATION SYSTEM

The batteries are ventilated by an independent sealed circuit. The air extraction is provided by a venturi. The ventilation is only effective with cabin differential pressure.

EXTRACTION SYSTEM

The air used for the avionics equipment ventilation is extracted by means of the extract fan. The air is discharged either to the FWD cargo compartment underfloor through the underfloor valve or overboard through the overboard valve. This system is controlled by the Avionics Equipment Ventilation Computer (AEVC).

EXTRACTION SYSTEM MAIN COMPONENTS

The extraction system is composed of:
- an extract fan,
- an underfloor valve,
- an overboard valve,
- an extract pressure switch.

The fan runs as soon as the aircraft electrical network is powered and remains on as long as electrical supply is available to the motor. The fan is of the one speed, three-phase 115/200V AC-powered type.
The overboard valve is of the skin mounted type. An electrical actuator controls the flap and microswitches detect the three positions of the valve, fully open, partially open and fully closed. A crank fitted on the valve is provided to manually set the valve in the required position.
The underfloor valve is of the butterfly type, electrically controlled by an actuator. Two positions are available: Fully open and fully closed. Microswitches are provided to detect the positions of the valve. A manual lever and visual indicator are provided to operate the valve manually.
The pressure switch monitors the operation of the system. It senses the differential pressure between the cabin and the extraction system.

NORMAL OPERATION

On ground with the aircraft electrically supplied, the fan starts to run, the overboard valve is fully open and the underfloor valve is fully closed. Air is extracted overboard. As soon as one engine is running (inboard engines running for the A340), or in flight the overboard valve closes and the underfloor valve opens. Air is extracted underneath the forward cargo floor compartment. Note that the underfloor extract valve can close only if the overboard valve is fully open.
When OVerRiDe is selected, the automatic operation of the system is overridden:
- the overboard valve opens partially,
- the underfloor valve closes,
- the extract fan runs if serviceable. This permits extraction of the air by differential pressure between the cabin and outside in case of a malfunction in the system.
These are the cases of malfunction:
- extract fan failure,
- dispatch of A/C with the overboard valve manually placed in partially open position,
- it is also used for the avionics smoke procedure.

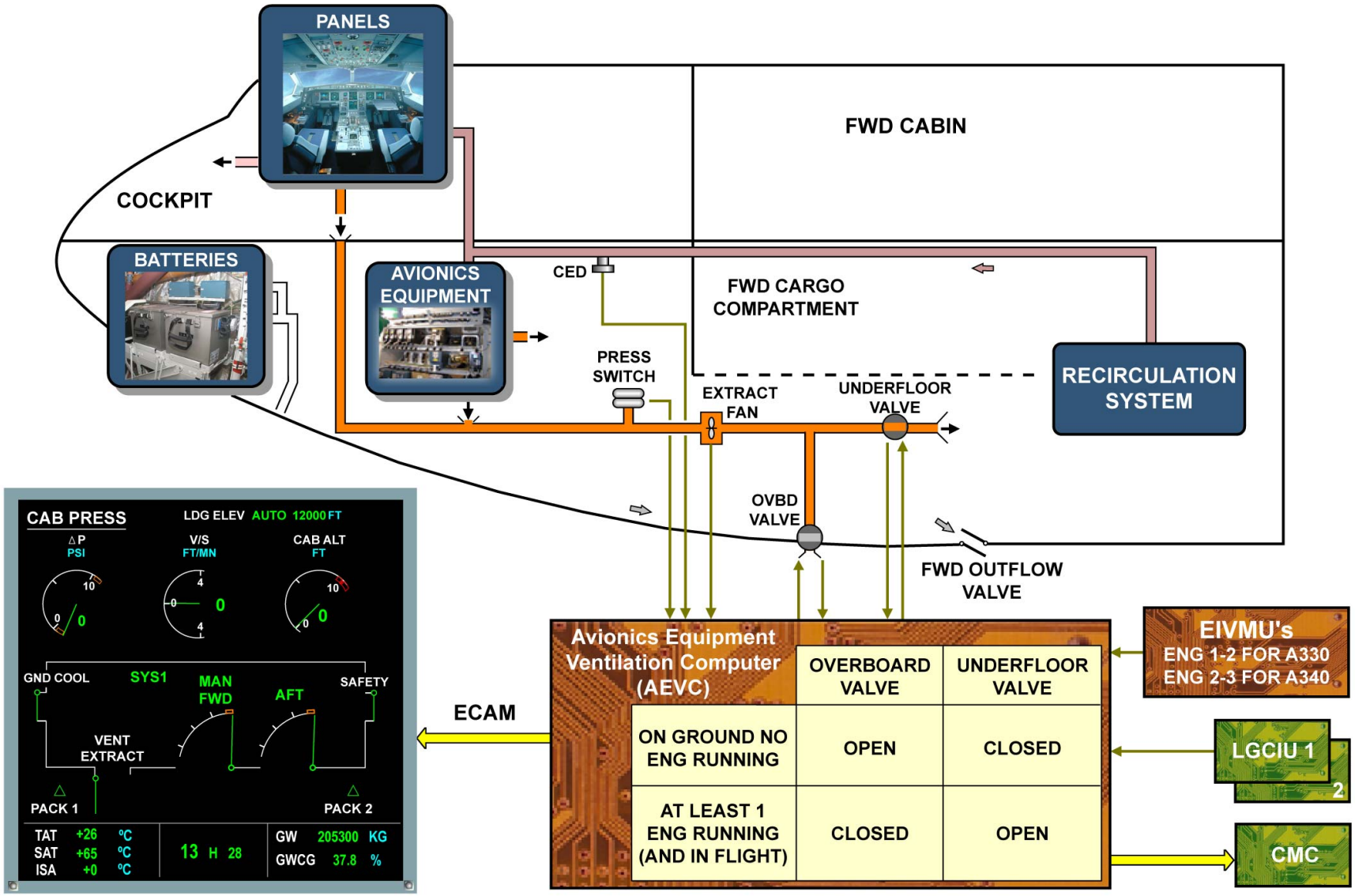

GENERAL ... NORMAL OPERATION

G7508471 - G3NT1T0 - FM21DCF21VC0102

This Page Intentionally Left Blank

G7508471 - G3NT1T0 - FM21DCF21VC0102

AVIONICS EQUIPMENT VENTILATION D/O (3)

ABNORMAL OPERATION: VENTILATION FAILURE

In this topic the following abnormal situations are detailed:
- insufficient cooling,
- fan failure,
- overboard valve failure,
- underfloor valve failure.

INSUFFICIENT COOLING

On ground, insufficient cooling detected by the CED activates the following warnings:
- mechanics call horn,
- AVNCS VENT caution light,
- ECAM message.

During flight, in case of insufficient cooling, the CED sends a signal to the AEVC. The AEVC sends a signal to the ECAM.

FAN FAILURE

In case of extract fan failure, the low airflow condition is detected by the pressure switch. A signal is sent to the AEVC. On ground with no engine running, the following warnings are activated:
- mechanics call horn,
- AVNCS VENT caution light,
- ECAM,
- Central Maintenance Computer (CMC),
- FAULT legend on the EXTRACT P/B.

As soon as one engine is running (engine 2 or 3 for the A340), the following warnings are activated:
- FAULT legend on the EXTRACT P/B,
- ECAM,
- CMC.

In case of overheat in the electrical motor of the fan, thermal switches cut off the electrical supply.

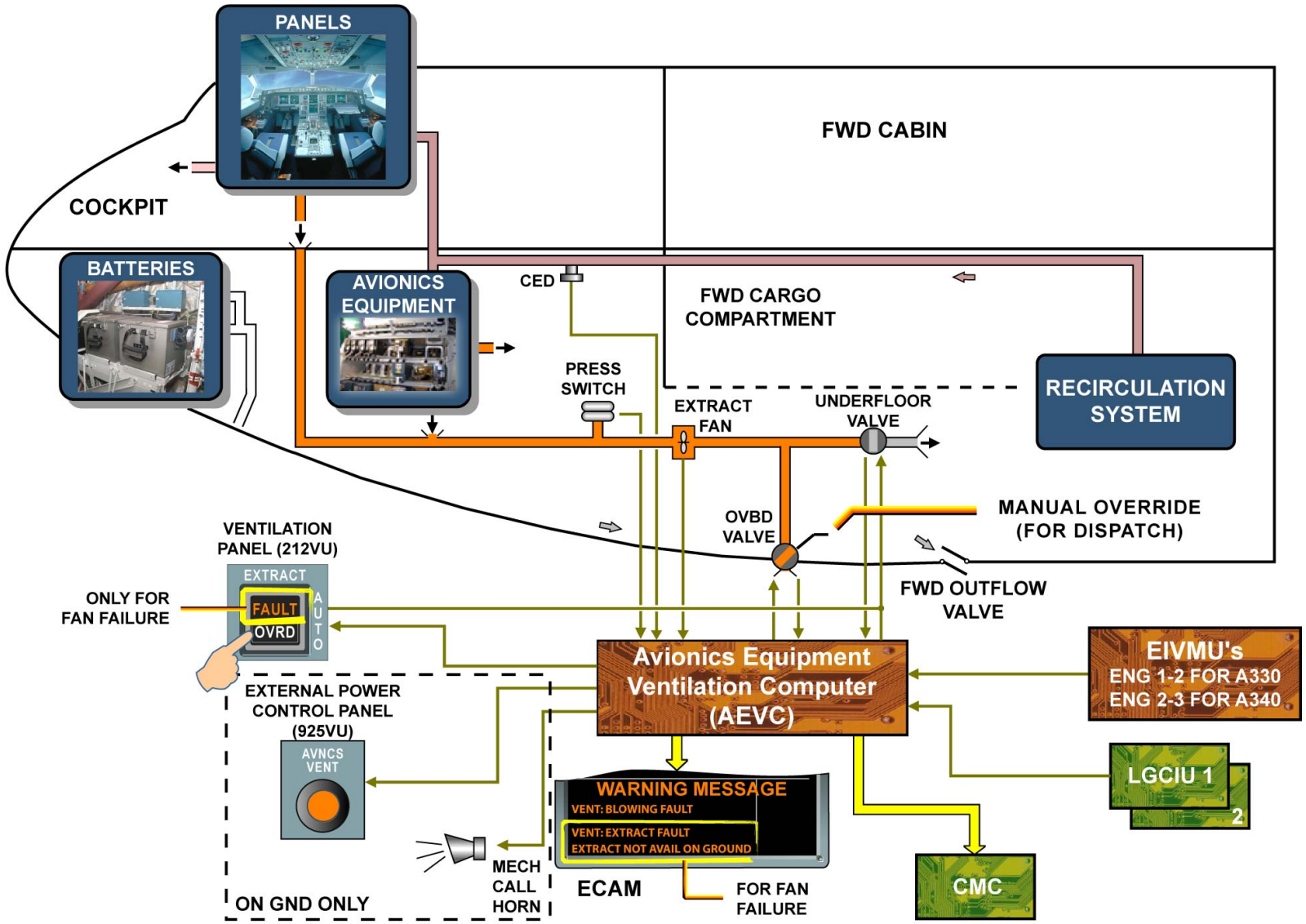

ABNORMAL OPERATION: VENTILATION FAILURE - INSUFFICIENT COOLING & FAN FAILURE

G7508471 - G3NT1T0 - FM21DCF21VC0102

AVIONICS EQUIPMENT VENTILATION D/O (3)

ABNORMAL OPERATION: VENTILATION FAILURE

OVERBOARD VALVE FAILURE

On ground, at first engine start (engine 2 or 3 start for the A340), if the overboard valve is detected jammed in the open position by the valve microswitches, the following warnings are activated:
- FAULT legend on the EXTRACT P/B,
- mechanics call horn,
- ECAM,
- CMC.

On ground, at both engines shutdown (engines 2 and 3 shut-down for the A340), if the overboard valve is detected jammed in the closed position by the valve microswitches, a warning message is sent to the CMC.

UNDERFLOOR VALVE FAILURE

On ground, at first engine start (engine 2 or 3 start for the A340), if the underfloor valve is detected jammed in the closed position by the pressure switch and the valve microswitches, the following warnings are activated:
- FAULT legend on the EXTRACT P/B,
- ECAM,
- CMC.

On ground, at both engine shutdown (engines 2 and 3 shut-down for the A340), if the underfloor valve is detected jammed in the open position by the microswitches, a warning message is sent to the CMC.
In case of valve positioning failure at engine start, the overboard valve can be partially opened and the underfloor valve closed manually.

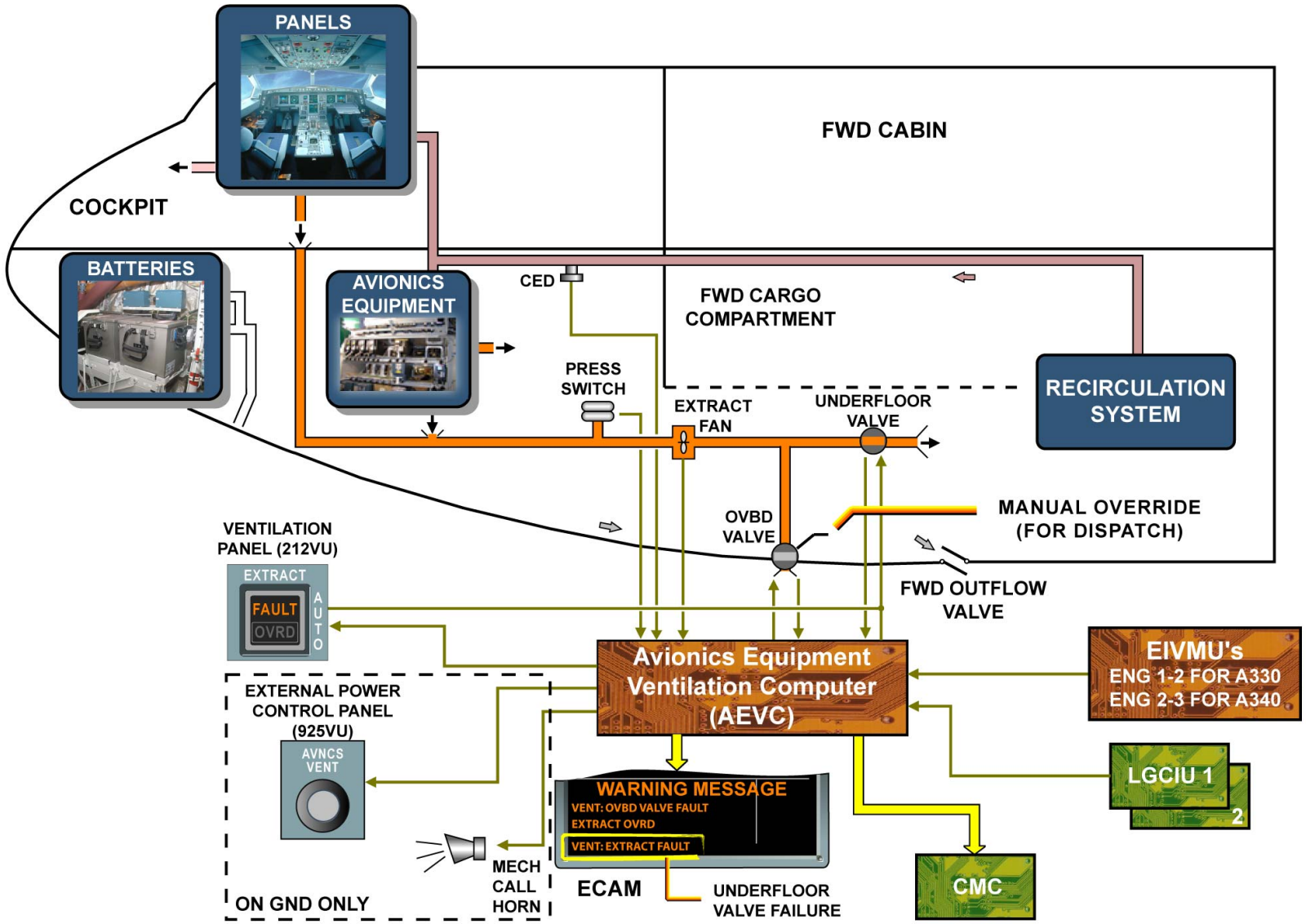

ABNORMAL OPERATION: VENTILATION FAILURE - OVERBOARD VALVE FAILURE & UNDERFLOOR VALVE FAILURE

G7508471 - G3NT1T0 - FM21DCF21VC0102

AVIONICS EQPT. GROUND COOLING D/O (OPTION) (3)

GENERAL PRINCIPLE

When operating in hot climates, an optional ground cooling system can be used to provide additional cooling of the avionics equipment.

G7508471 - G3NT1T0 - FM21DDF21VL0202

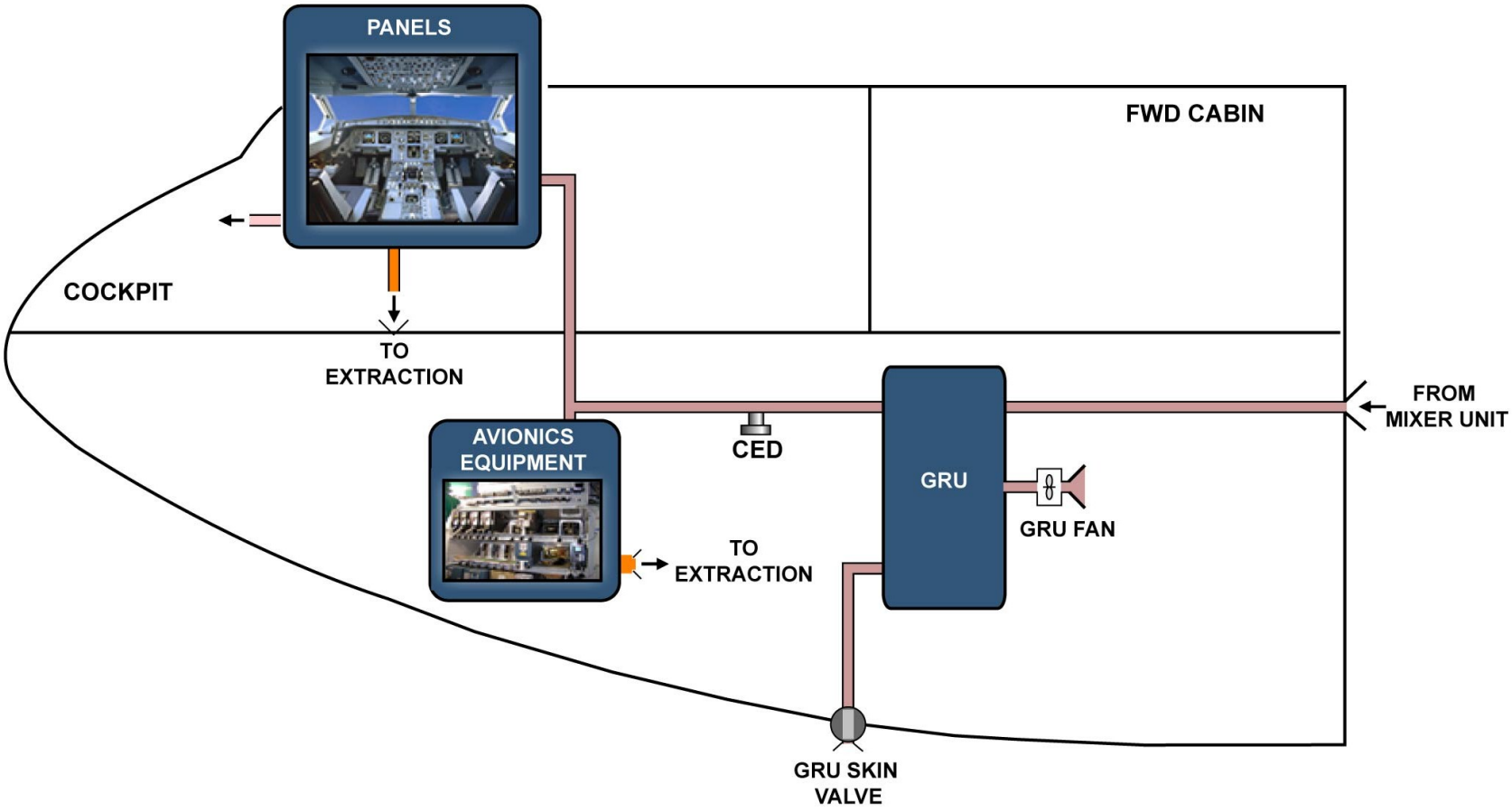

CED: Cooling Effect Detector

GENERAL PRINCIPLE

AVIONICS EQPT. GROUND COOLING D/O (OPTION) (3)

GENERAL PRINCIPLE (continued)

PRINCIPLE

The air is cooled by a refrigerant-fluid cycle system called the Ground Refrigeration Unit (GRU). The airflow required for the GRU condenser is supplied by the GRU fan in the avionics compartment. The fan blows ambient air from the avionics compartment through the condenser and then overboard, through the GRU skin valve.

MAIN COMPONENTS

The avionics equipment GND cooling system includes these components:
- a GRU fan,
- a GRU,
- a GRU skin valve.

FAN

The fan is of the one speed design. It is directly controlled by the GRU Electronic Control Box (ECB). The fan starts and stops simultaneously with the GRU compressor.
A thermal switch is connected to the fan motor to stop the fan in case of overheat. There is an overheat indicator and a reset P/B installed on the fan housing.

GROUND REFRIGERATION UNIT (GRU)

The GRU is a compact assembly and consists of a refrigerant-fluid cycle system. When the refrigerant fluid is in a vapor state, it is compressed and transformed into liquid form by an electrical scroll compressor and cooled through a condenser.
The liquid passes through a tank desiccant filter to remove water particles and impurities. Then it is expanded through a calibrated expansion orifice in order to ensure sufficient sub-cooling.
The refrigerant fluid is piped to the evaporator where it is transformed into a gaseous state by cooling the air blown to the avionics. The condensation water formed in the evaporator is drained into the lower fuselage area.
The unit is controlled and monitored by an ECB located on the upper part of its structure. It is possible to test and reset the ECB through a specific connector. A plug protects this connector during GRU normal operation.
The GRU is equipped with a filling valve on the tank filter inlet. The valve is used for servicing the GRU. It is protected by a threaded plug.

SKIN VALVE

The GRU skin valve has two positions. The valve is actuated by a 28 VDC electrical motor. It is controlled and monitored by the Avionics Equipment Ventilation Controller (AEVC). In the event of an electrical failure, a manual override mechanism enables valve operation from outside the A/C. A deactivation switch set in the OFF position enables the valve to be manually operated by use of the stowed handle.

G7508471 - G3NT1T0 - FM21DDF21VL0202

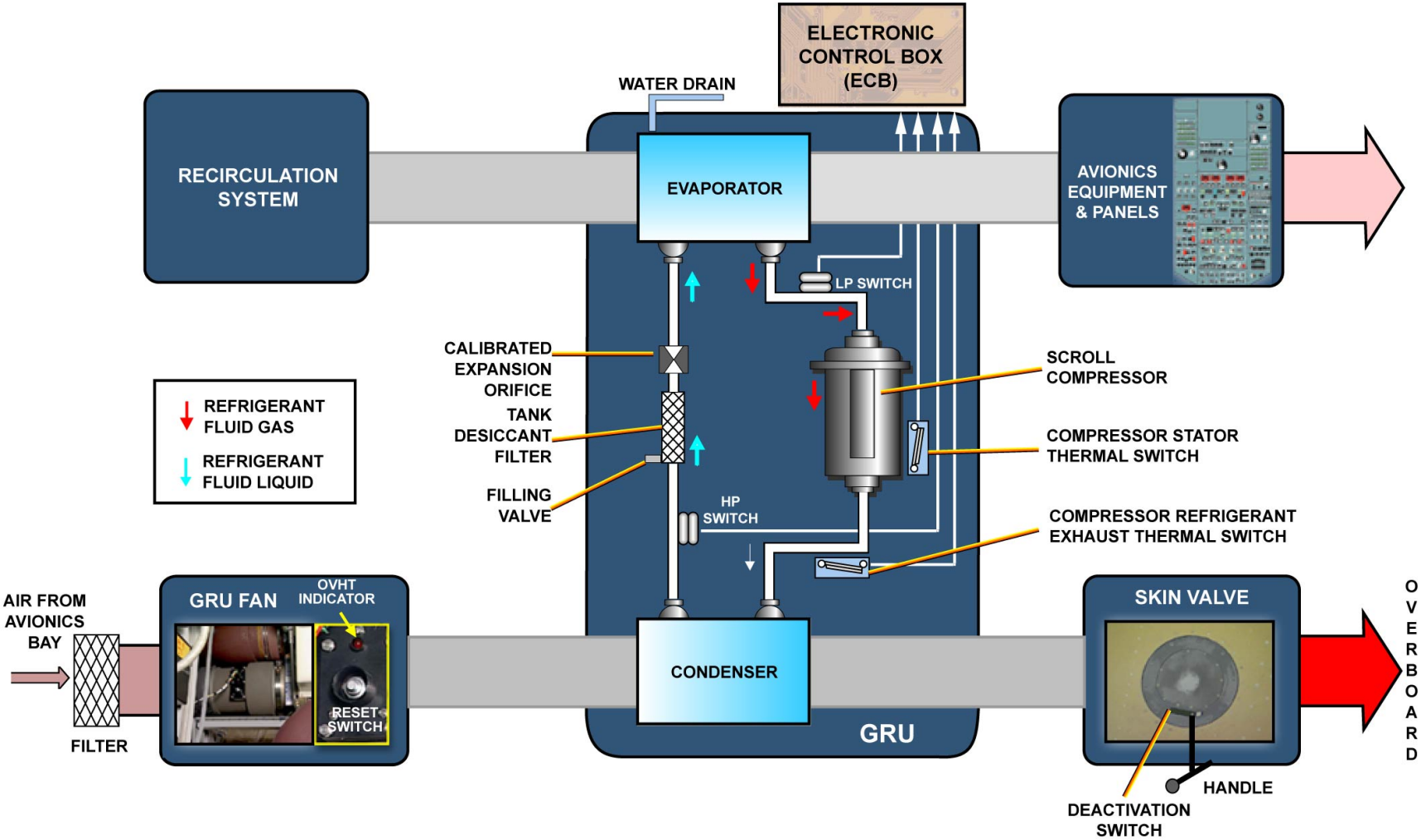

GENERAL PRINCIPLE & MAIN COMPONENTS

G7508471 - G3NT1T0 - FM21DDF21VL0202

AVIONICS EQPT. GROUND COOLING D/O (OPTION) (3)

NORMAL OPERATION

The system operation can be controlled through the GND COOL P/B.

AUTO CONTROL

When the GND COOL P/B is set to AUTO, the AEVC controls the skin valve to open, if the A/C is on ground, and the engines are shut down.
When the skin valve has reached its Fully Open (FO) position, and both air conditioning packs are stopped for at least 2 minutes, the valve open signal is sent to the GRU ECB.
As soon as the skin valve open signal is received, the GRU is in standby mode.
When the temperature exceeds 27.5ºC, the fan and the GRU are automatically powered. The automatic shutdown occurs when the temperature drops below 23ºC. The skin valve closure or at least one pack flow control valve opening lead to the fan and GRU shutdown.

MANUAL SHUTDOWN

When the GND COOL P/B is set to OFF, the skin valve is directly controlled to the closed position and the fan and GRU power supply is switched off through power relays control.

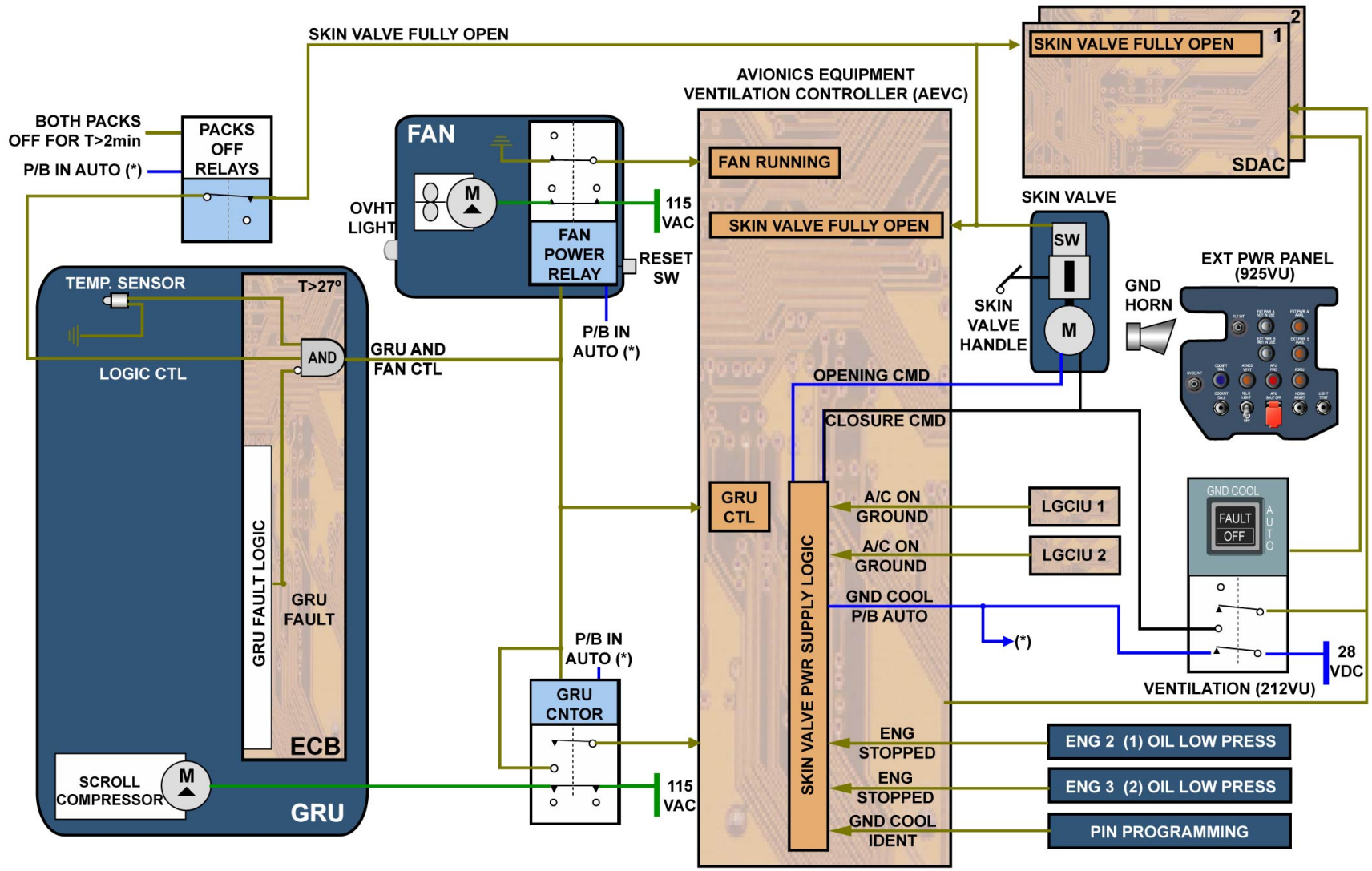

NORMAL OPERATION - AUTO CONTROL & MANUAL SHUTDOWN

G7508471 - G3NT1T0 - FM21DDF21VL0202

AVIONICS EQPT. GROUND COOLING D/O (OPTION) (3)

ABNORMAL OPERATION

This topic will describe the abnormal operation of the avionics equipment GND cooling system.

VALVE JAMMING

If the skin valve is jammed in the open position at engine start, the crew must try to close the valve with the GND COOL P/B. If it fails to close, manual closure from the outside will be requested.
The skin valve jammed in the open position at engine start will cause the:
- illumination of the FAULT legend on the GND COOL P/B,
- generation of warnings on the EWD,
- display of amber skin valve indication on the CAB PRESS page,
- display of amber GND COOL indication on the CAB PRESS page.

If the skin valve is jammed in the closed position at engine shutdown, the GND COOL P/B must remain in AUTO position and manual opening from the outside is requested.
The skin valve jammed in the closed position at engine shutdown will cause the:
- illumination of the FAULT legend on the GND COOL P/B,
- generation of warnings on the EWD,
- display of amber skin valve indication on the CAB PRESS page,
- display of amber GND COOL indication on the CAB PRESS page,
- activation of the ground horn,
- illumination of the AVNCS VENT CAUT light on the external power panel.

VALVE DEACTIVATION/REACTIVATION

If manual operation is requested, a PUSH handle latch allows the handle to be folded out then deployed. Before turning the handle to close or open the valve, a deactivation switch must be set to the OFF position.
The deactivation switch must be set back to the ON position as soon as the problem is fixed in order to recover automatic control.

FAN OVERHEAT

If a fan overheat occurs, the overheat protection removes the power supply to the fan. The crew is requested to set the GND COOL P/B to the OFF position.
- A fan overheat will cause the:
- illumination of the OVHT light on the fan flange,
- illumination of the FAULT legend on the GND COOL P/B,
- generation of warnings on the EWD (VENT GND COOL FAULT),
- display of the amber GND COOL indication on the CAB PRESS page,
- activation of the ground horn,
- illumination of the AVNCS VENT CAUT light on the external warning panel.

FAN RESET

A fan reset must be performed after the OVHT light comes on and the trouble shooting procedure has been completed. The fan and the GRU will start and the OVHT light will go off, only if the overheat condition is no longer detected.

GRU FAILURE

If a fault occurs, a GRU fault logic in the ECB will automatically switch off the compressor motor and fan power supply. The GRU failure may also come from the GRU contactor malfunction.
A GRU failure will also cause the:
- illumination of the FAULT legend on the GND COOL P/B,
- generation of warnings on the EWD (VENT GND COOL FAULT),
- display of amber GND COOL indication on the CAB PRESS page,
- activation of the ground horn,
- illumination of the AVNCS VENT CAUT light on the external power panel,

G7508471 - G3NT1T0 - FM21DDF21VL0202

- the crew is requested to set the GND COOL P/B to the OFF position.

GRU RESET

If the reset of the GRU is performed from the overhead panel, the GRU may restart but the ECB memorizes the fault. It is only possible to clear the fault by means of a special fault control box connected to the GRU test and reset connector.

GRU TEST

If a failure occurs, it is possible to test the GRU by means of a special test control box connected to the GRU test and reset connector. However, it is impossible to start up the GRU again until the system failures that caused the overheating, overpressure or under pressure conditions have been corrected.

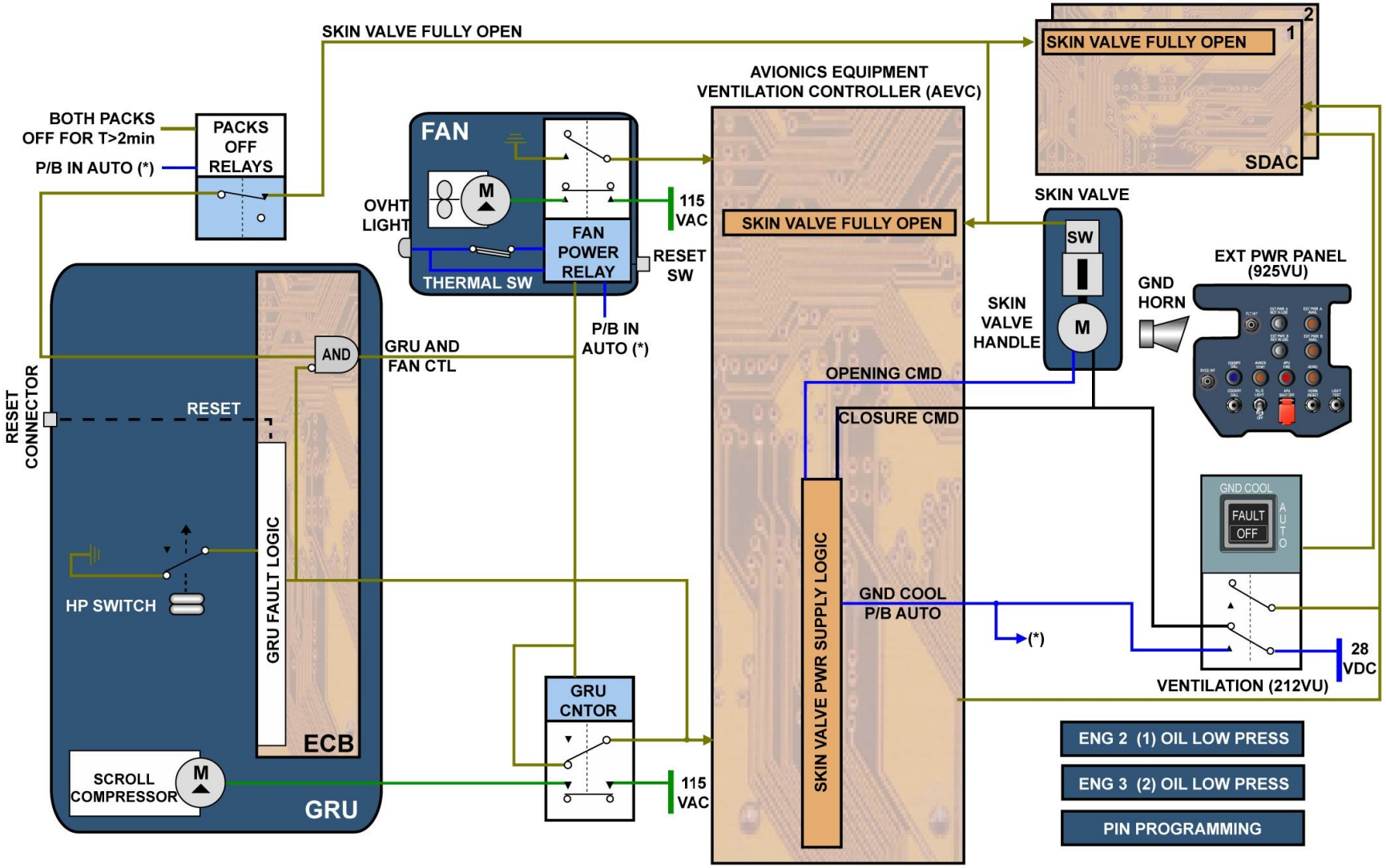

ABNORMAL OPERATION - VALVE JAMMING ... GRU TEST

G7508471 - G3NT1T0 - FM21DDF21VL0202

This Page Intentionally Left Blank

G7508471 - G3NT1T0 - FM21DDF21VL0202

SYSTEM D/O (3)

GENERAL

The system ensures proper air circulation in the air conditioning bay in order to maintain a temperature compatible with structure constraints in the relevant area.

G7508471 - G3NT1T0 - FM21DEAIRCBAY03

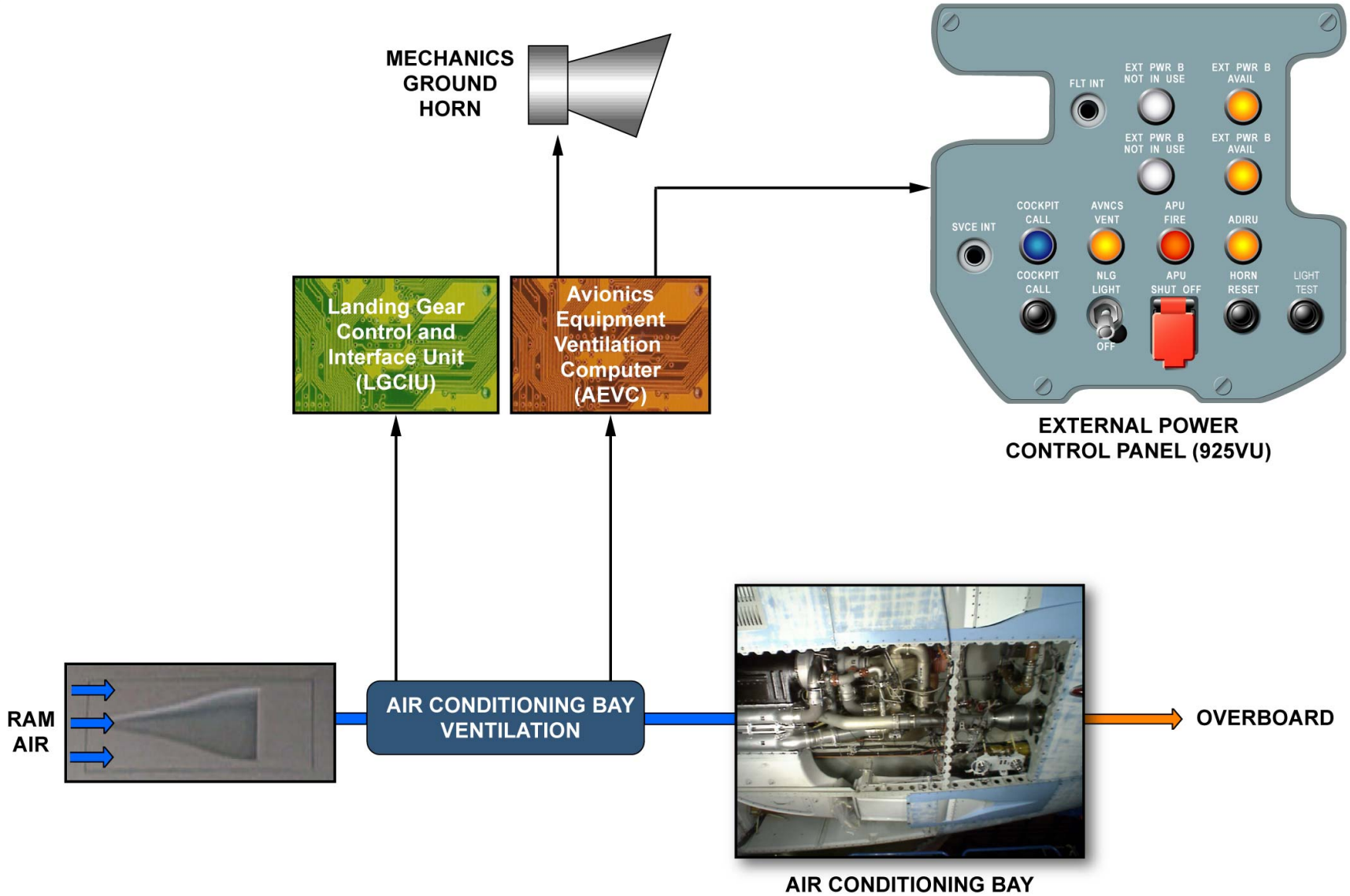
MECHANICS GROUND HORN
Landing Gear Control and Interface Unit (LGCIU)
Avionics Equipment Ventilation Computer (AEVC)
FLT INT
EXT PWR B NOT IN USE
EXT PWR B AVAIL
EXT PWR B NOT IN USE
EXT PWR B AVAIL
SVCE INT
COCKPIT CALL
AVNCS VENT
APU FIRE
ADIRU
COCKPIT CALL
NLG LIGHT
OFF
APU SHUT OFF
HORN RESET
LIGHT TEST
EXTERNAL POWER CONTROL PANEL (925VU)
RAM AIR
AIR CONDITIONING BAY VENTILATION
OVERBOARD
AIR CONDITIONING BAY

GENERAL

SYSTEM D/O (3)

GENERAL (continued)

SYSTEM ARCHITECTURE

The left and right packs are located in the air conditioning bay. The air conditioning bay is located in the unpressurized belly fairing forward of the wheel well on the lower fuselage. The air conditioning packs and their associated hot air pipes provide in-operation heat dissipation. The air conditioning bay ventilation is performed through the left-hand pack and the right-hand pack. The ventilation principle is based on the use of external air through a NACA air inlet. Air is distributed by means of piccolo tubes and finally discharged overboard through an air outlet. The system has:
- a turbofan,
- a turbofan supply valve,
- a check valve,
- a pressure switch.

SYSTEM CONTROLS

The turbo supply valve controls:
- start of the turbofan on ground,
- stop of the turbofan in flight.

The Landing Gear Control and Interface Unit (LGCIU) 1 directly controls turbofan supply valve.

SYSTEM MONITORING

The Avionics Equipment Ventilation Computer (AEVC) monitors the turbofan supply valve and the pressure switch to send the necessary information to the Central Maintenance Computer (CMC) to take the maintenance corrective action. In case of system abnormal operation, a visual warning is displayed on the external power control panel. In addition, an aural warning is triggered through the ground horn. In flight, a warning message on the EWD is displayed.

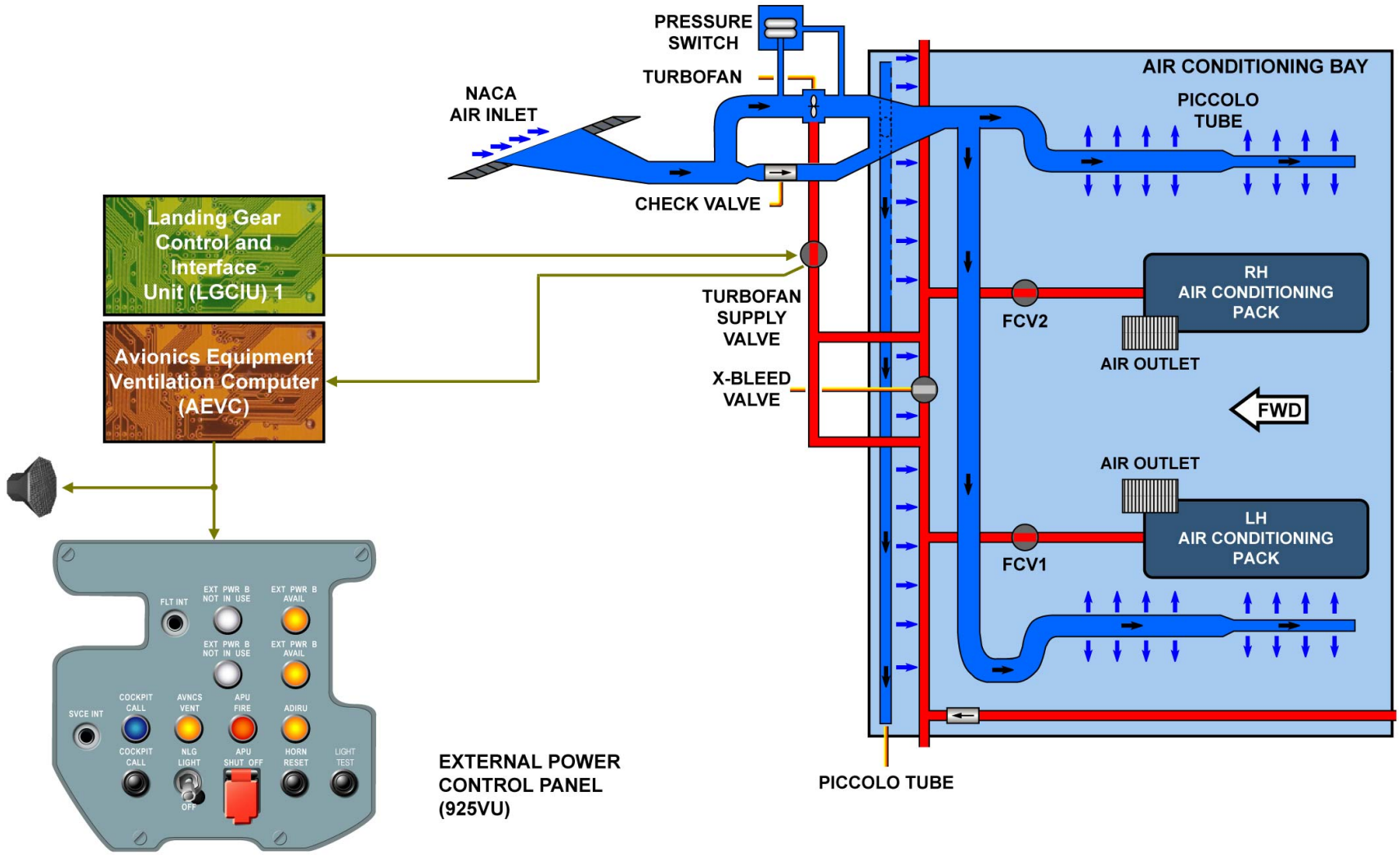

GENERAL - SYSTEM ARCHITECTURE ... SYSTEM MONITORING

G7508471 - G3NT1T0 - FM21DEAIRCBAY03

SYSTEM D/O (3)

DESCRIPTION

The air conditioning packs are located in an unpressurized area on the lower fuselage. To ensure air circulation to maintain safe compartment temperatures, the air conditioning compartment ventilation system uses air supplied by a dedicated turbofan on ground and by a related NACA air inlet in flight. Three piccolo tubes enable correct air distribution in the air conditioning compartment. The ventilation air is discharged overboard through an orifice in the lower part of the belly fairing.

AEVC

The AEVC monitors the position of turbofan supply valve. It also monitors the pressure switches for sufficient airflow to the compartment. The AEVC outputs are:
- one discrete output connected to both System Data Acquisition Concentrators (SDAC) in order to generate class 2 fault signals,
- one ARINC 429 bus connected to the CMC to generate the relevant maintenance messages.

TURBOFAN

The turbofan is located in the belly fairing and is attached to the A/C structure by four shock absorbers. The turbofan is a pneumatic-powered, turbine-driven fan. Its housing can contain fan impeller fragments in case of a failure.

TURBOFAN SUPPLY VALVE

The pneumatically operated turbofan supply valve is installed on the turbofan turbine air supply line. A solenoid controls the valve open and closed and it is spring-loaded closed in the absence of air pressure. A safety altitude device prevents inadvertent opening of the valve when the A/C altitude exceeds 15,000 ft. Two microswitches are fitted to supply position information.

CHECK VALVE

A check valve is installed on the ventilation system of the air conditioning compartment. It is closed on ground and open in flight. The check valve prevents air recirculation in the duct and ensures correct operation of the turbofan.

PRESSURE SWITCH

The differential pressure switch is monitored by the AEVC. The pressure switch position is used with the pack Flow Control Valve (FCV) position to trigger a warning when the FCV is open and the pressure switch is sensing low flow.

OPERATION

The air conditioning bay ventilation system has 2 operational modes:
- a ground mode,
- a flight mode.

ON GROUND

On the ground, the LGCIU 1 controls the turbofan supply valve to open, by de-energizing the valve solenoid. Provided there is pneumatic supply (crossbleed duct supplied), high-pressure air passes through the turbofan supply valve and drives the turbofan. Then, the turbofan draws air, through the NACA air inlet, to supply the necessary airflow in the air conditioning compartment. The check valve is closed during operation. The turbine airflow is discharged into and mixed with the turbofan air. A pressure switch is connected to the upstream turbofan pressure-port (port P2) and to the downstream turbofan pressure-port (port P1). This permits ventilation monitoring of the air conditioning compartment provided at least one FCV is open.

IN FLIGHT

In flight, ram air through the NACA inlet is sufficient for cooling, so the LGCIU1 controls the turbofan supply valve closed by energizing the solenoid.

ABNORMAL OPERATION

Here is a detailed description of the different failures that can occur in the air conditioning bay ventilation system.

MAINTENANCE ACTION

For maintenance action on ground, a blanking plug is fitted in the vicinity of the turbofan to blank the turbine supply line. This deactivates a failed turbofan and allows dispatch under Master Minimum Equipment List (MMEL) condition. The blanking plug prevents:
- permanent hot air leakage on the ground in case of failure of the turbofan (jammed),
- excessive rotation speed of the turbofan in flight in case of failure of the turbofan supply valve (jammed in the open position).

TURBOFAN SUPPLY VALVE FAILURE

On ground, if the turbofan supply valve fails to open when one pack FCV is open, the following warnings are activated:
- a warning message is displayed on the EWD,
- an audio warning is triggered through the ground horn,
- an AVioNiCS VENTilation caution light comes on the external power control panel,
- a message is sent to the Central Maintenance System (CMS). The packs should be switched OFF on the ground. They can be selected back ON after takeoff.

In flight, if the supply valve is detected open by the AEVC, the warnings are activated:
- a warning message is displayed on the EWD,
- a message is sent to the CMS.

TURBOFAN JAMMING

On ground, if the turbofan is detected jammed by the pressure switch, when at least one FCV is open, these warnings are activated:
- a warning message is displayed on the EWD,
- an audio warning is triggered through the ground horn,
- an AVNCS VENT caution light appears on the external power control panel,
- a message is sent to the CMS.

The packs should be switched OFF on the ground. They can be selected back ON after takeoff. A maintenance action with the blanking plug is needed before dispatch under MMEL condition.

CHECK VALVE FAILURE

A check valve stuck in the closed position cannot be detected. But on ground, the pressure switch enables a check valve stuck in open position to be detected and the warnings to be activated:
- a warning message is displayed on the EWD,
- an audio warning is triggered through the ground horn,
- an AVNCS VENT caution light appears on the external power control panel,
- a message is sent to the CMS.

The packs should be switched OFF on the ground. They can be selected back ON after takeoff.

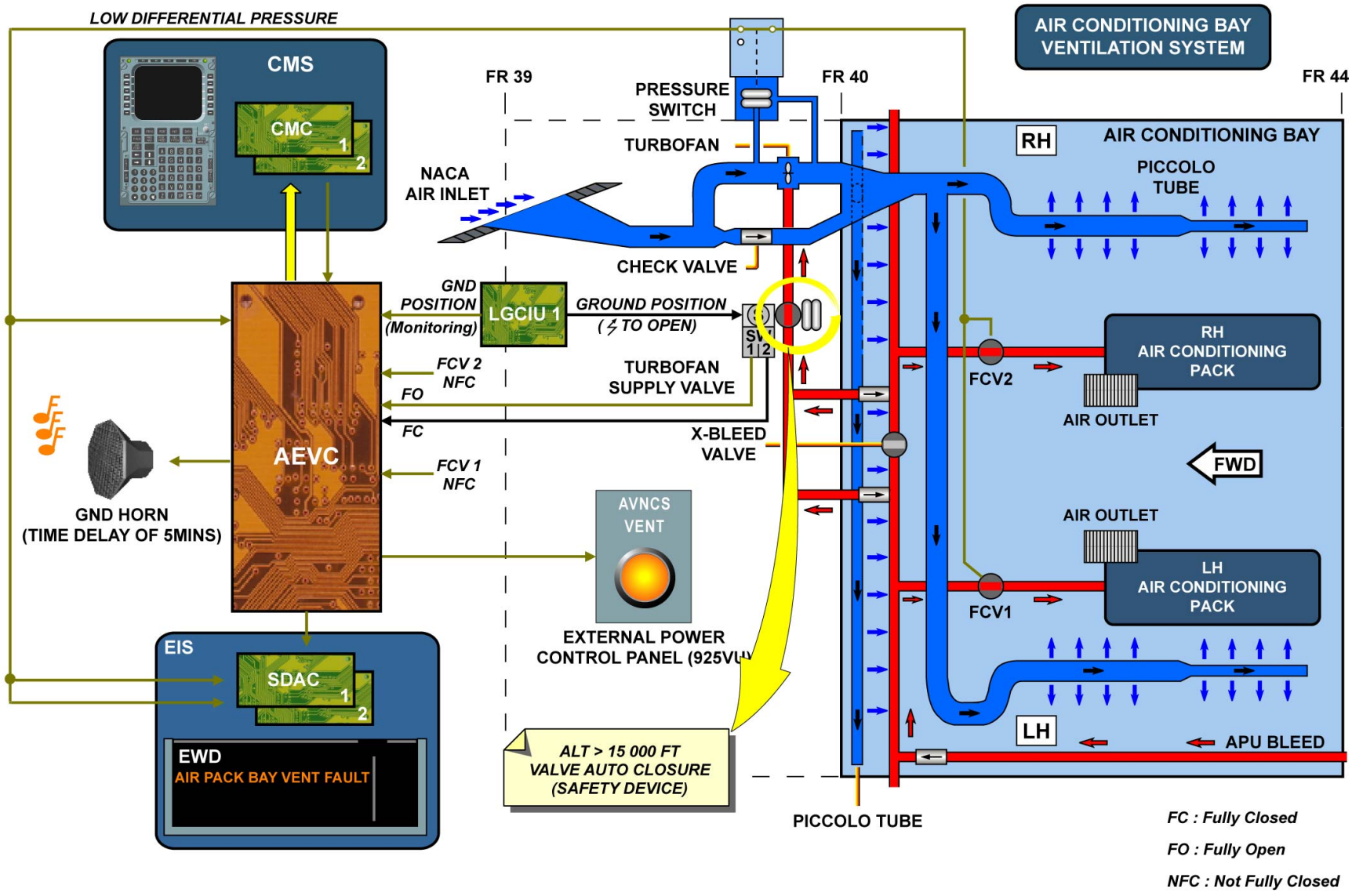

DESCRIPTION ... ABNORMAL OPERATION

G7508471 - G3NT1T0 - FM21DEAIRCBAY03

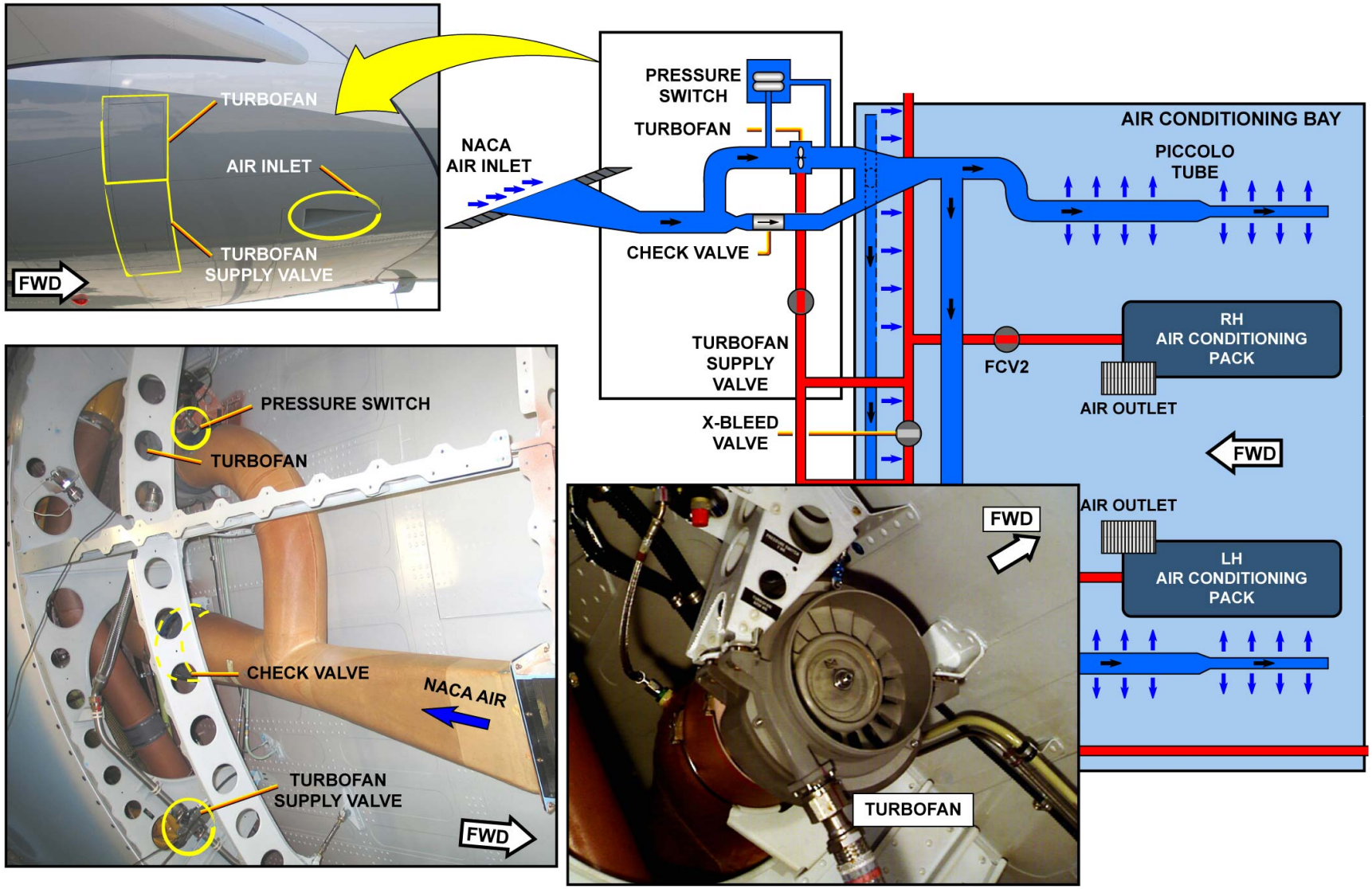

DESCRIPTION ... ABNORMAL OPERATION

AIR CONDITIONING MCDU PAGES (2)

GENERAL

The SYSTEM REPORT/TEST function of the CMS ground menu, on the MCDU for the air conditioning system, gives access to an interactive mode.
This mode allows fault interrogation and testing of:
- the Avionics Equipment and Ventilation Controller (AEVC),
- the Ventilation Controller (VC),
- the Environmental Control System (ECS) through the Zone Controller (ZC) and the Pack Controllers (PCs),
- and finally the Cabin Pressure Controllers (CPCs).

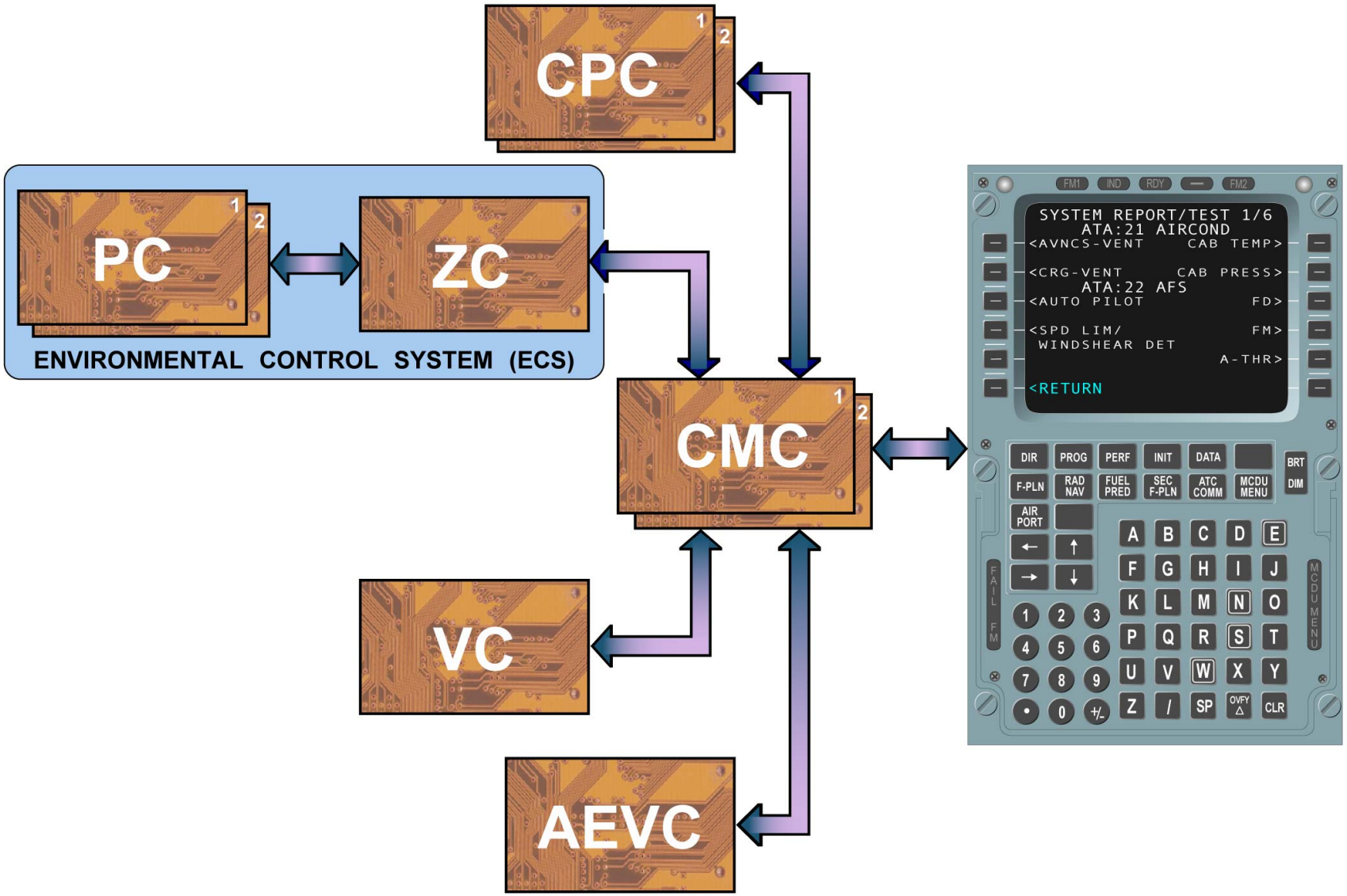
CPC
1
2
PC
1
2
ZC
ENVIRONMENTAL CONTROL SYSTEM (ECS)
CMC
1
2
VC
AEVC
FM1
IND
RDY
FM2
SYSTEM REPORT/TEST 1/6
ATA:21 AIRCOND
<AVNCS-VENT
CAB TEMP>
<CRG-VENT
CAB PRESS>
ATA:22 AFS
<AUTO PILOT
FD>
<SPD LIM/
WINDSHEAR DET
FM>
A-THR>
<RETURN
DIR
PROG
PERF
INIT
DATA
BRT
DIM
F-PLN
RAD NAV
FUEL PRED
SEC F-PLN
ATC COMM
MCDU MENU
AIR PORT
FAIL FM
MCDU MENU
SP
OVFY
CLR

GENERAL

AIR CONDITIONING MCDU PAGES (2)

AIR CONDITIONING TEST CAPABILITY

The air conditioning SYSTEM REPORT TEST capabilities are:
- the AVNCS VENT test,
- the CRG VENT tests and the specific functions,
- the CAB TEMP tests and the specific data,
- and the CAB PRESS test.

AVNCS VENT TEST

From the main menu of the air conditioning SYSTEM REPORT TEST, the selection of the AVNCS-VENT line key will give access to the Avionics Equipment and Ventilation Controller (AEVC)menu. The AEVC is a type 2 computer which allows the operator to perform a system test including an overboard extract valve functional cycle test.

CRG VENT TESTS AND SPECIFIC FUNCTIONS

From the main menu of the air conditioning SYSTEM REPORT TEST, the selection of the CRG-VENT line key will give access to the Ventilation Controller (VC) menu.
The VC is a type 1 computer with GND SCANNING capability. In addition, the VC menu page allows the operator to perform the following specific functions:
- the SYSTEM TEST to check the VC and the related components,
- the ADDITIONAL TEST which are the back up test and the power supply test,
- the SPECIFIC FUNCTIONS to display specific data and component status.

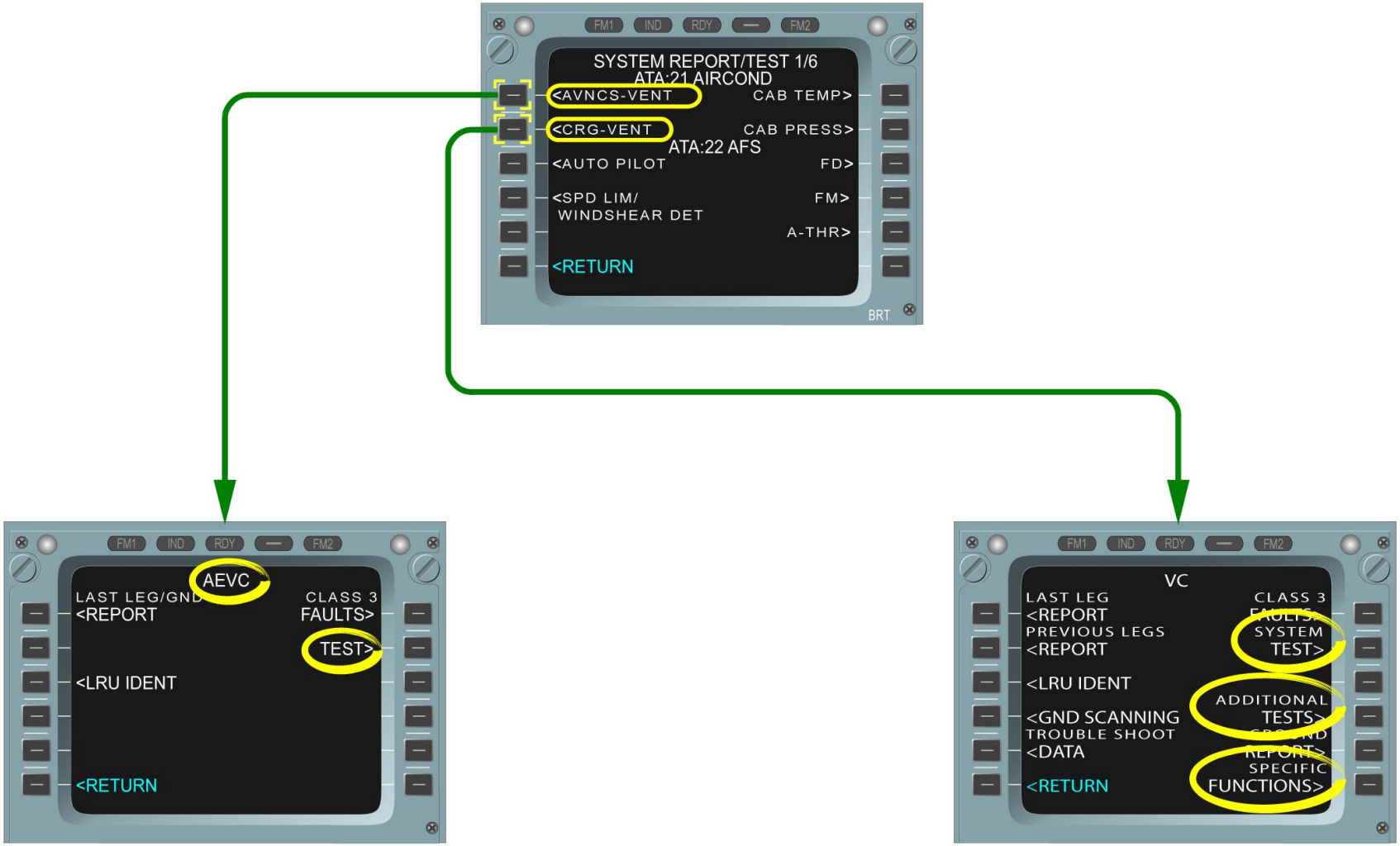

AIR CONDITIONING TEST CAPABILITY - AVNCS VENT TEST & CRG VENT TESTS AND SPECIFIC FUNCTIONS

G7508471 - G3NT1T0 - FM21P7MCDUTST02

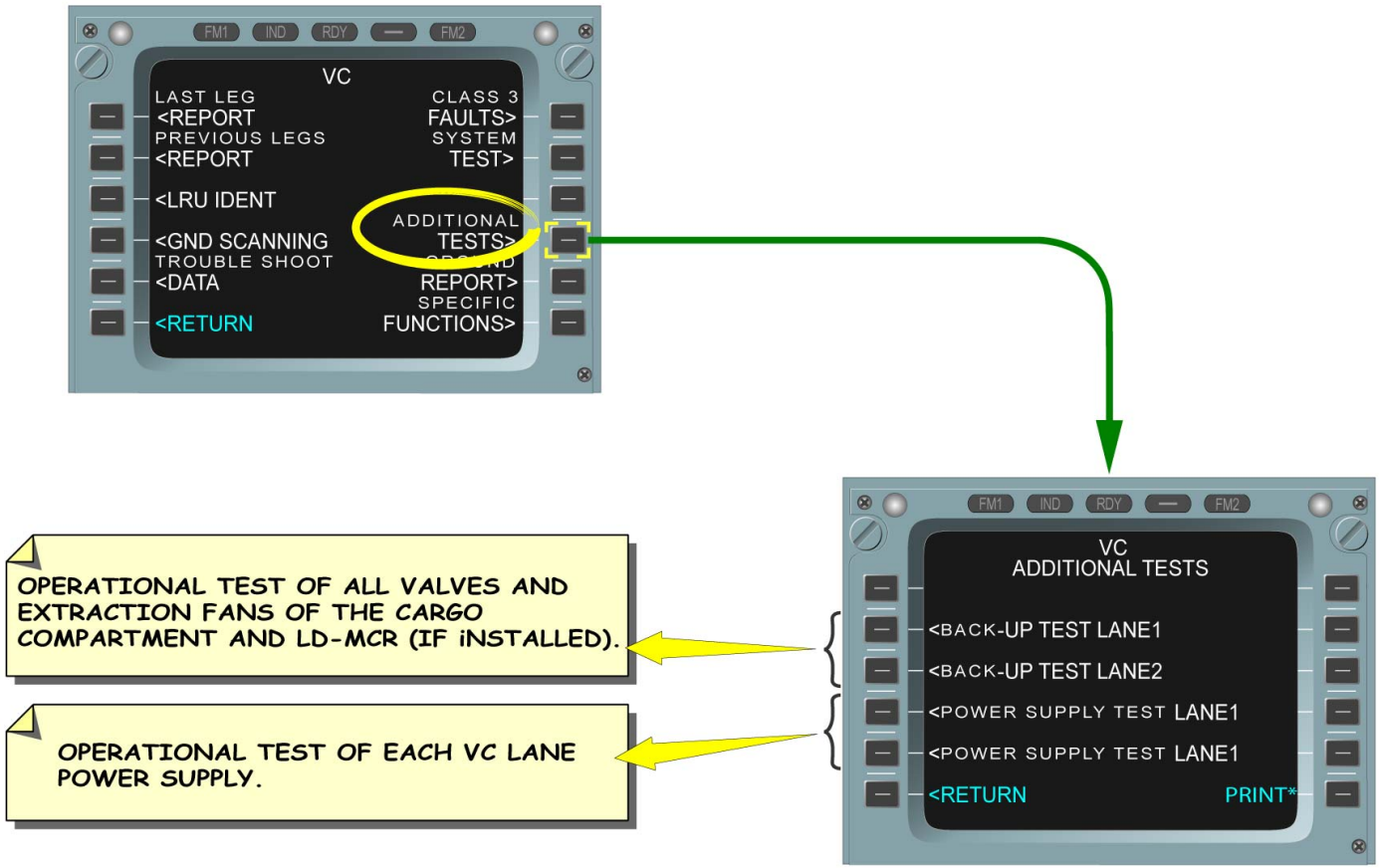

AIR CONDITIONING TEST CAPABILITY - AVNCS VENT TEST & CRG VENT TESTS AND SPECIFIC FUNCTIONS

G7508471 - G3NT1T0 - FM21P7MCDUTST02

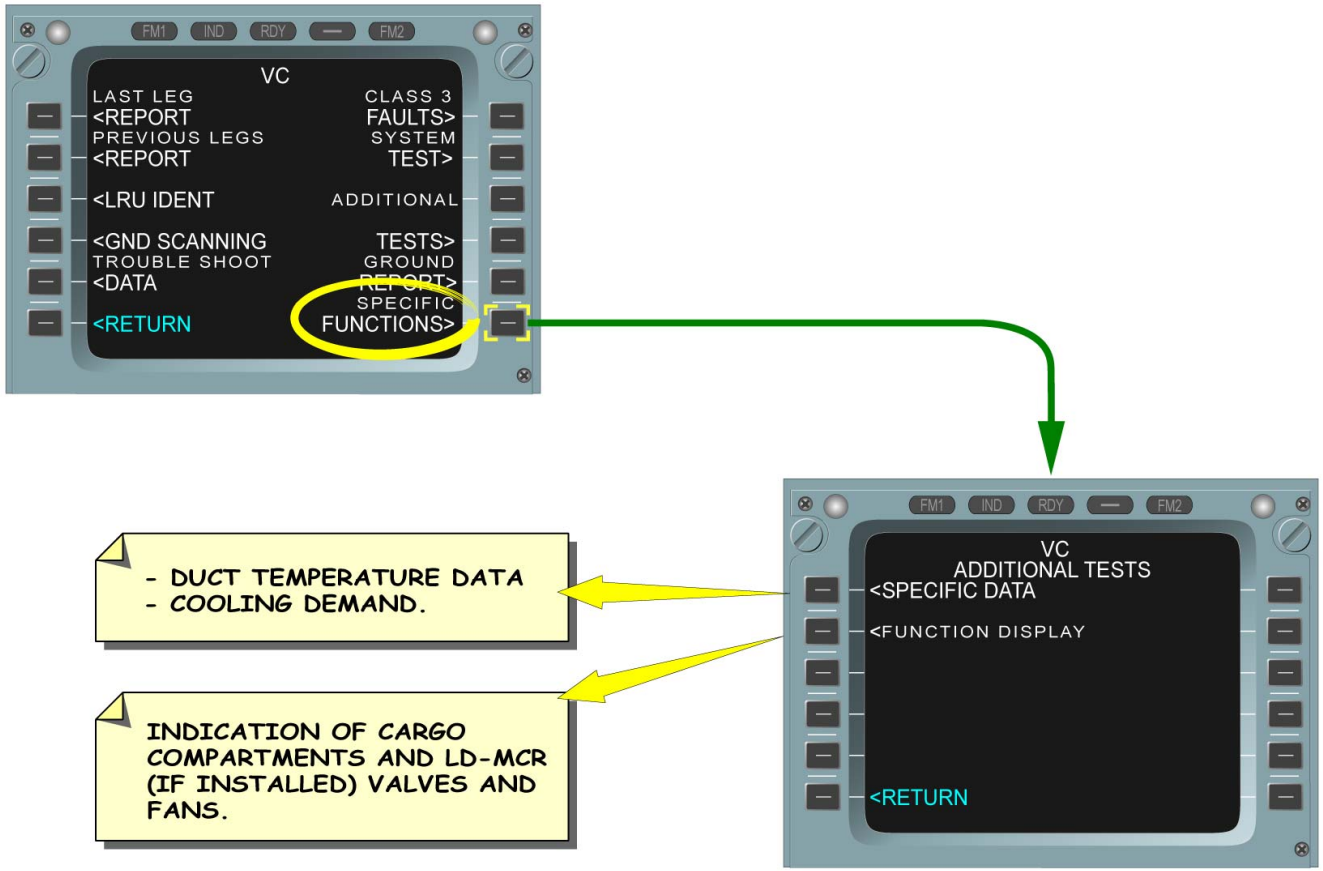

AIR CONDITIONING TEST CAPABILITY - AVNCS VENT TEST & CRG VENT TESTS AND SPECIFIC FUNCTIONS

G7508471 - G3NT1T0 - FM21P7MCDUTST02

AIR CONDITIONING MCDU PAGES (2)

AIR CONDITIONING TEST CAPABILITY (continued)

CAB TEMP TESTS AND SPECIFIC DATA

From the main menu of the air conditioning SYSTEM REPORT TEST, the selection of the CAB TEMP line key will give access to the Environmental Control System (ECS) menu.
The ECS menu enables interrogation of the Zone Controller (ZC) and the Pack Controllers (PCs) which are type 1 computers with GND SCANNING capability. In addition, the ECS system page allows the operator to perform the following specific functions:
- the TEST to check the ZC, the PCs and their related components, as well as the pack flap rigging purposes,
- the SPECIFIC DATA to display system data and to adjust temperature parameters as duct temperature limitation and altitude correction.

CAB PRESS TEST

From the main menu of the air conditioning SYSTEM REPORT TEST, the selection of the CAB PRESS line key will give access to the Cabin Pressure Controllers (CPCs) menu.
Tests can be performed through CPC 1 or CPC2.
The CPCs are type 1 computers with GND SCANNING capability.
The CPCs menu allows the operator to perform the TEST of the computers and their related components.

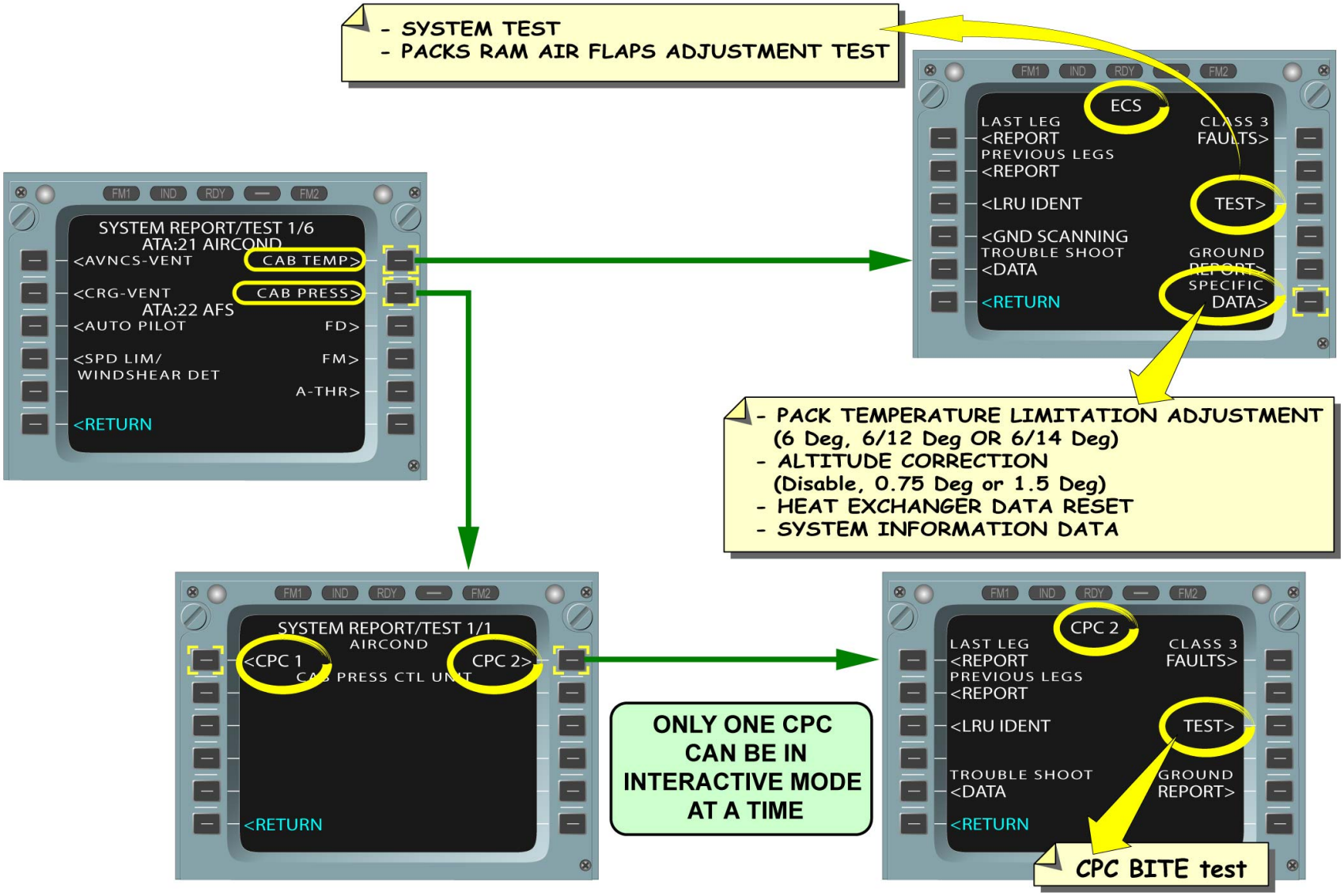

AIR CONDITIONING TEST CAPABILITY - CAB TEMP TESTS AND SPECIFIC DATA & CAB PRESS TEST

G7508471 - G3NT1T0 - FM21P7MCDUTST02

AIR CONDITIONING SYSTEM BASE MAINTENANCE (3)

FILTER ELEMENTS REMOVAL AND INSTALLATION

The purpose of this module is to present the FWD and AFT recirculation filter elements removal and installation.

NOTE: Note that the aft filter elements are disposable and not cleanable.

JOB SET-UP

WARNING: MAKE SURE THAT AIR IS NOT SUPPLIED TO THE AIR CONDITIONING SYSTEM FROM THE MAIN ENGINE, THE APU OR A GROUND SOURCE. HOT COMPRESSED AIR CAN CAUSE INJURY TO STAFF.

Open the FWD cargo compartment door for FWD filters access and the AFT cargo compartment door for AFT filters access.
Remove applicable panels to get access to filters. For the FWD filters, remove the FWD cargo compartment rear wall panels. For the AFT filters, remove the FWD wall panels.
On the AIR control panel, make sure that the APU BLEED, the ENG BLEED and the PACK 1(2) P/BSWs are released out (OFF legend on). Put a warning notice on the High Pressure (HP) and Low Pressure (LP) ground connectors to warn persons not to supply the A/C with a ground air source.

Filter elements removal/installation

...

Job set-up

...

- **Aircraft maintenance configuration**
- **Safety precautions**

...

Procedure

...

- **Removal of the forward filter elements**
- **Removal of the aft filter elements**
- **Installation of the forward filter elements**
- **Installation of the aft filter elements**

...

Close-up

...

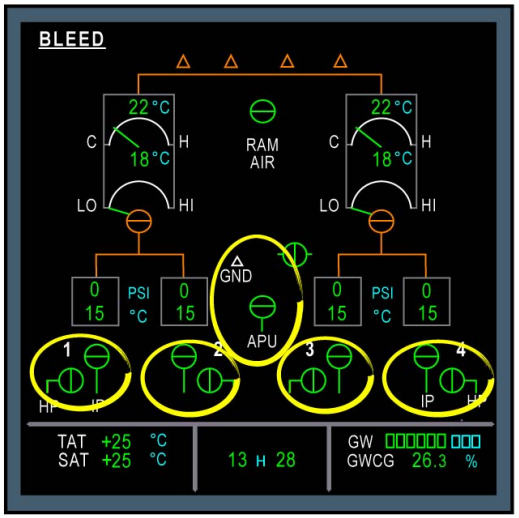

A340 ECAM BLEED PAGE

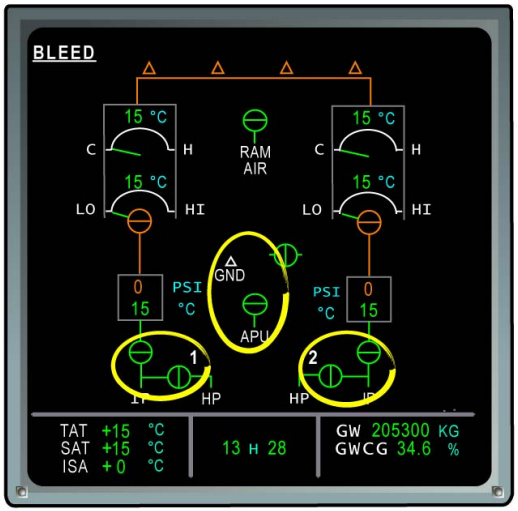

A330 ECAM BLEED PAGE

FILTER ELEMENTS REMOVAL AND INSTALLATION - JOB SET-UP

Filter elements removal/installation

...

Job set-up

...

- **Aircraft maintenance configuration**
- **Safety precautions**

...

Procedure

...

- **Removal of the forward filter elements**
- **Removal of the aft filter elements**
- **Installation of the forward filter elements**
- **Installation of the aft filter elements**

...

Close-up

...

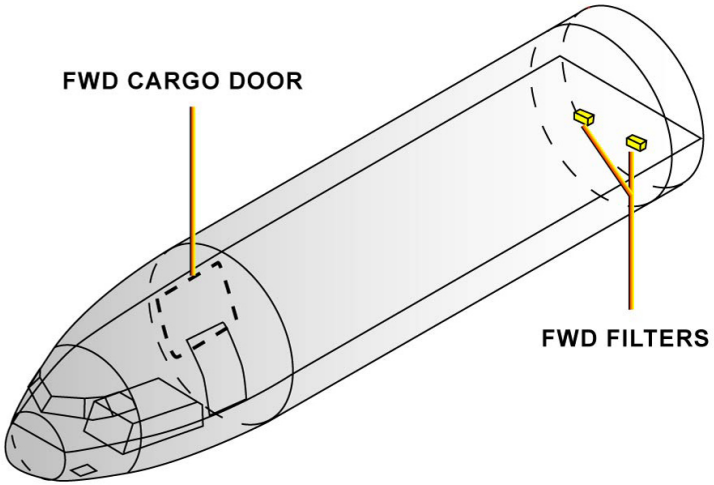

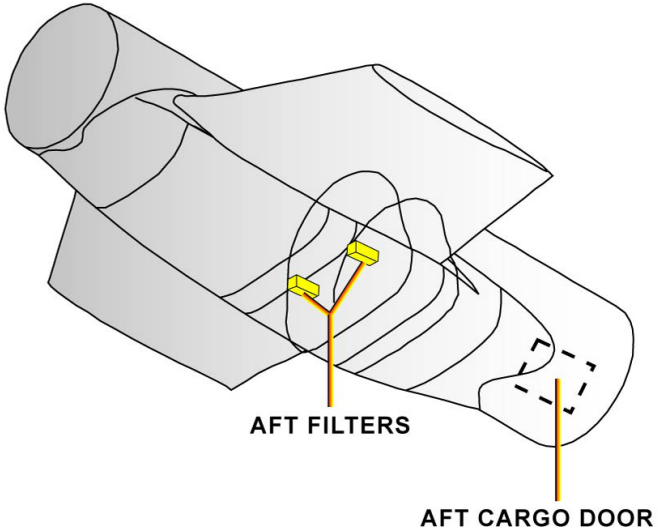

FILTER ELEMENTS REMOVAL AND INSTALLATION - JOB SET-UP

Filter elements removal/installation

...

Job set-up

...

- ✓ Aircraft maintenance configuration
- ⇨ **Safety precautions**

...

Procedure

...

- Removal of the forward filter elements
- Removal of the aft filter elements
- Installation of the forward filter elements
- Installation of the aft filter elements

...

Close-up

...

A340 AIR PANEL

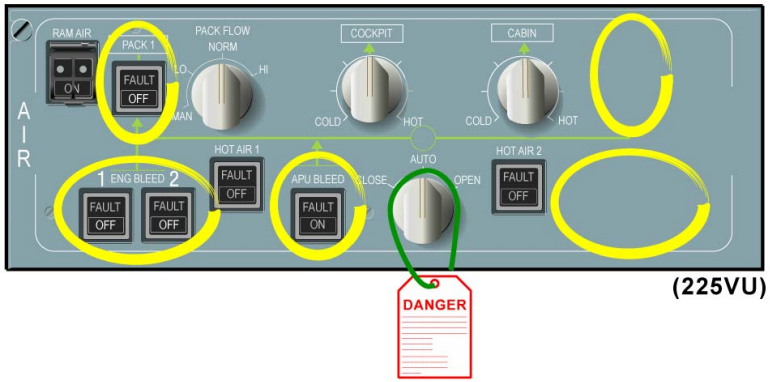

(225VU)

A330 AIR PANEL

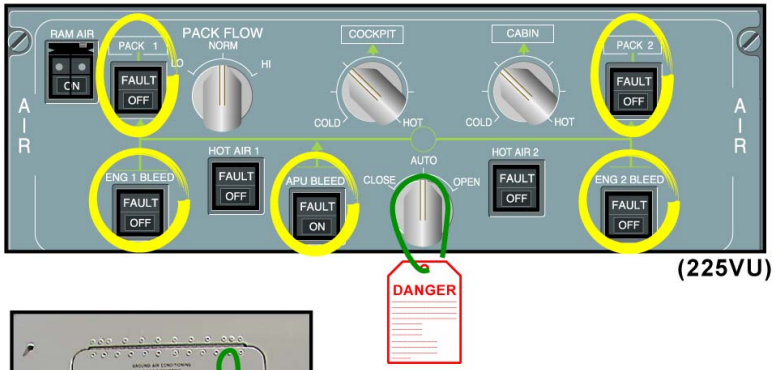

(225VU)

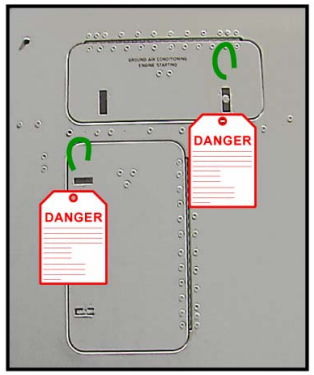

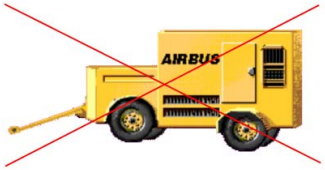

FILTER ELEMENTS REMOVAL AND INSTALLATION - JOB SET-UP

AIR CONDITIONING SYSTEM BASE MAINTENANCE (3)

FILTER ELEMENTS REMOVAL AND INSTALLATION (continued)

REMOVAL OF THE FWD FILTER ELEMENTS

CAUTION: Do not step on the ducts due to their fragility. You must replace all the filters on the same side of the A/C at the same time:
-the RH FWD filters with the RH AFT filters,
-the LH FWD filters with the LH AFT filters.

To remove the left FWD filter elements:
- unlock the locks and open the fasteners of the mounting assembly,
- release each of the two fasteners,
- pull the tabs off the studs,
- disengage the channels from the two studs and pull the filter element,
- remove the filter element from its mounting assembly.

Use the same procedure to remove the right FWD filter elements.

Filter elements removal/installation

...
Job set-up
...

Aircraft maintenance configuration

Safety precautions

...
Procedure
...

Removal of the forward filter elements

Unlock the locks and open the fasteners of the mounting assembly.
Release each of the two fasteners.
Pull the tabs off the studs.
Disengage the channels from the two studs and pull the filter element.
Remove the filter element from its mounting assembly.
...

Removal of the aft filter elements

Installation of the forward filter elements

Installation of the aft filter elements

...
Close-up
...

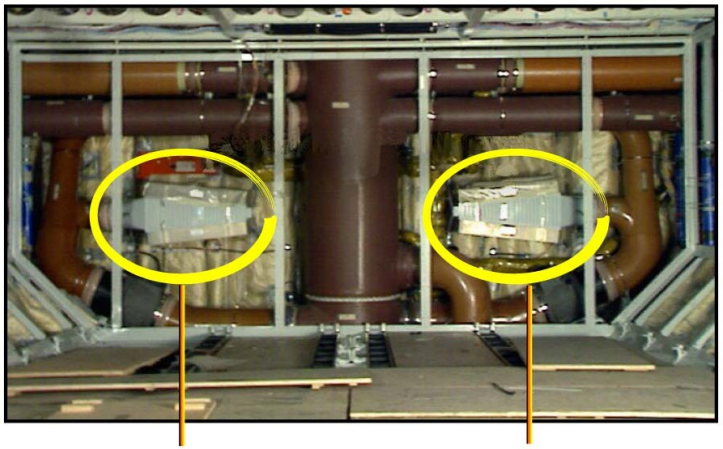

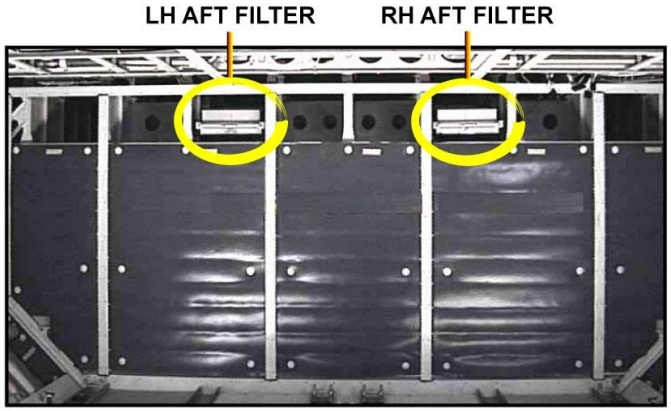

FILTER ELEMENTS REMOVAL AND INSTALLATION - REMOVAL OF THE FWD FILTER ELEMENTS

Filter elements removal/installation

...
Job set-up
...

Aircraft maintenance configuration

Safety precautions

...
Procedure
...

Removal of the forward filter elements

Unlock the locks and open the fasteners of the mounting assembly.
Release each of the two fasteners.
Pull the tabs off the studs.
Disengage the channels from the two studs and pull the filter element.
Remove the filter element from its mounting assembly.
...

Removal of the aft filter elements

Installation of the forward filter elements

Installation of the aft filter elements

...
Close-up
...

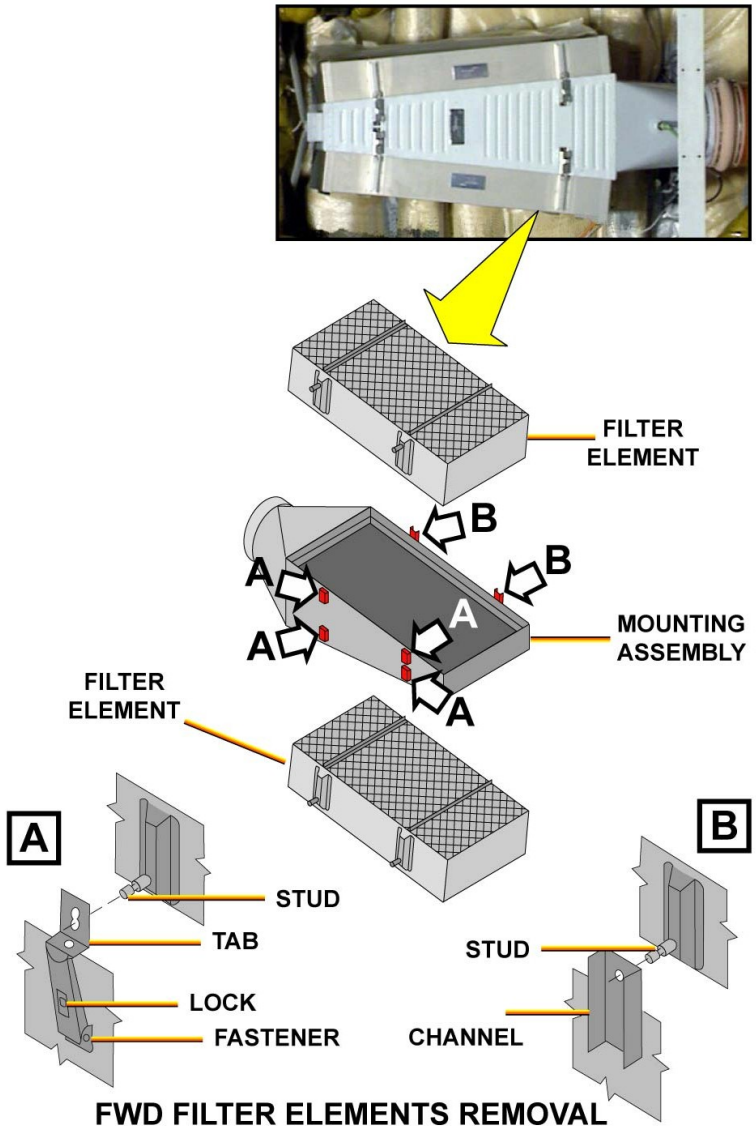

FILTER ELEMENTS REMOVAL AND INSTALLATION - REMOVAL OF THE FWD FILTER ELEMENTS

This Page Intentionally Left Blank

G7508471 - G3NT1T0 - FM21Y2BASEMCE03

AIR CONDITIONING SYSTEM BASE MAINTENANCE (3)

FILTER ELEMENTS REMOVAL AND INSTALLATION (continued)

REMOVAL OF THE AFT FILTER ELEMENTS

The AFT filter elements removal procedure is similar to the one for the FWD filter elements. The AFT filters are accessible through the forward wall of the aft cargo compartment.

Filter elements removal/installation

...
Job set-up
...

- Aircraft maintenance configuration
- Safety precautions

...
Procedure
...

- Removal of the forward filter elements
- Removal of the aft filter elements
- Installation of the forward filter elements
- Installation of the aft filter elements

...
Close-up
...

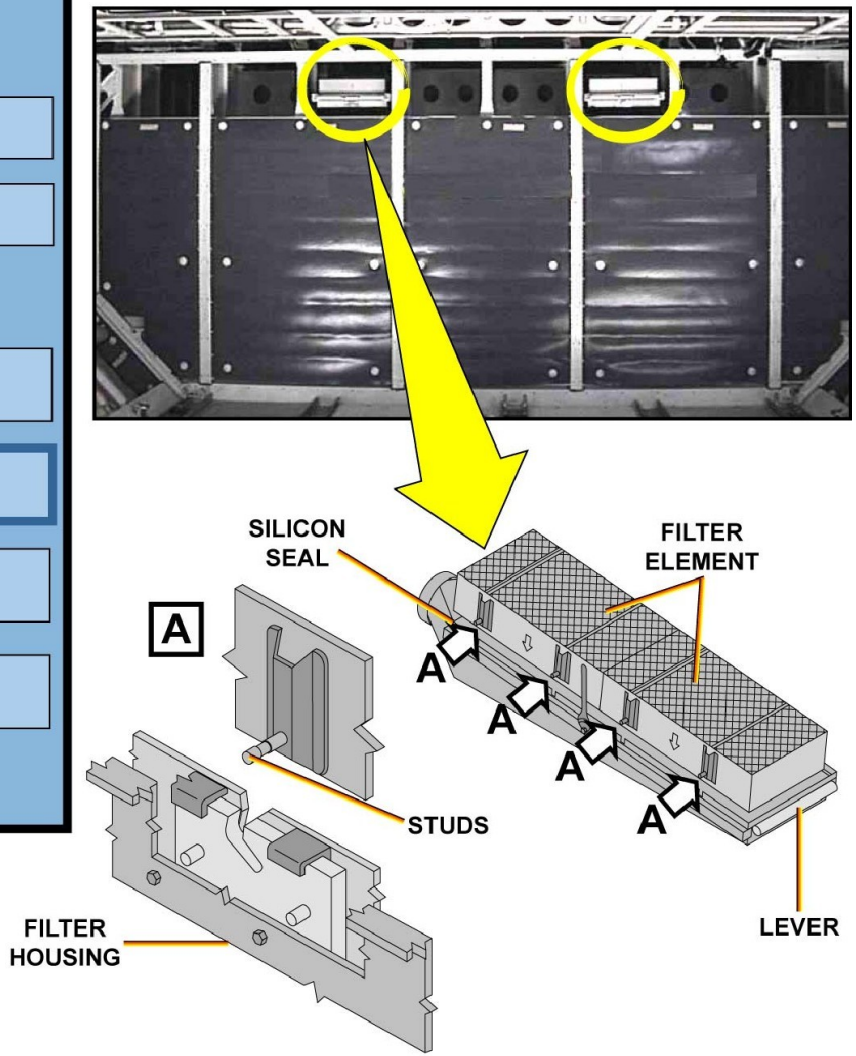

AFT FILTER ELEMENTS REMOVAL

FILTER ELEMENTS REMOVAL AND INSTALLATION - REMOVAL OF THE AFT FILTER ELEMENTS

AIR CONDITIONING SYSTEM BASE MAINTENANCE (3)

FILTER ELEMENTS REMOVAL AND INSTALLATION (continued)

INSTALLATION OF THE FWD FILTER ELEMENTS

Follow the reverse removal sequence to install the FWD filter elements.

NOTE: Note: Make sure that the silicone seal is in good condition before you close the fasteners.

Filter elements removal/installation

...
Job set-up
...

- Aircraft maintenance configuration
- Safety precautions

...
Procedure
...

- Removal of the forward filter elements
- Removal of the aft filter elements
- Installation of the forward filter elements
  - Engage the two studs in the related holes in the channels.
    Put the two tabs in position and engage them in the grooves of the studs.
    Close the fasteners.
- Installation of the aft filter elements

...
Close-up
...

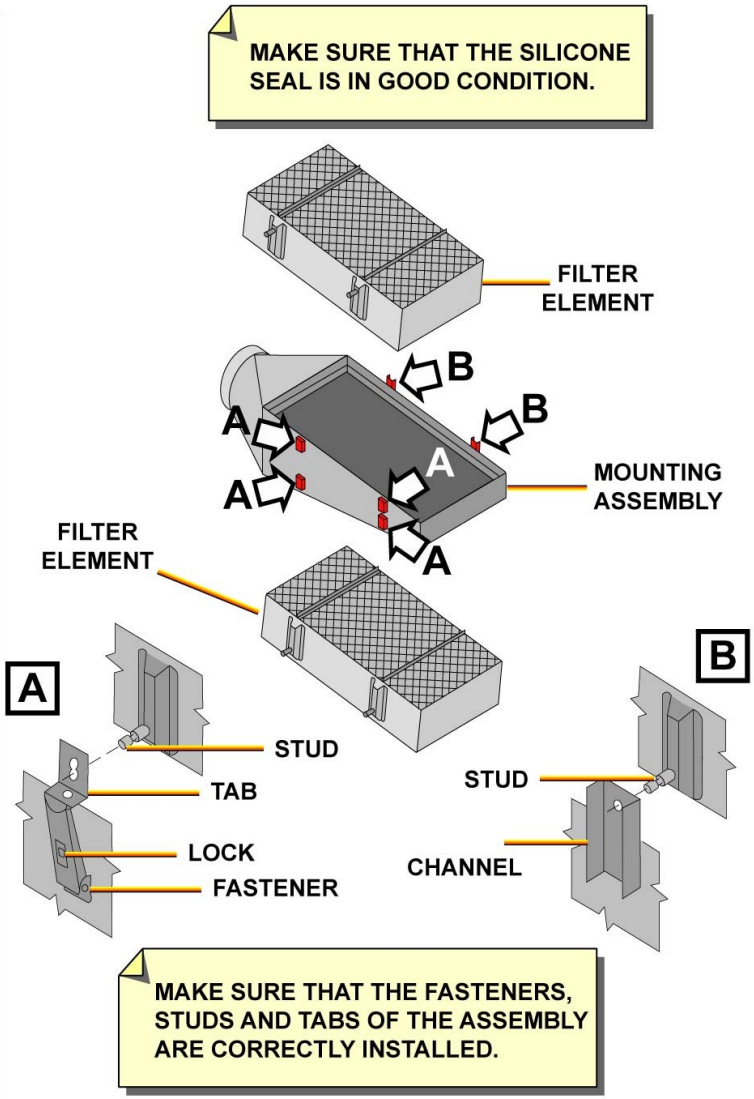

FWD FILTER ELEMENTS INSTALLATION

FILTER ELEMENTS REMOVAL AND INSTALLATION - INSTALLATION OF THE FWD FILTER ELEMENTS

AIR CONDITIONING SYSTEM BASE MAINTENANCE (3)

FILTER ELEMENTS REMOVAL AND INSTALLATION (continued)

INSTALLATION OF THE AFT FILTER ELEMENTS

The AFT filter elements installation procedure is similar to the one for the FWD filter elements.
Remove all warning notices and close the FWD and AFT cargo compartment doors.

Filter elements removal/installation

...
✓ Job set-up
...

✓ Aircraft maintenance configuration

✓ Safety precautions

...
Procedure
...

✓ Removal of the forward filter elements

✓ Removal of the aft filter elements

✓ Installation of the forward filter elements

➡ Installation of the aft filter elements

...
Close-up
...

MAKE SURE THAT THE SILICONE SEAL IS IN GOOD CONDITION.

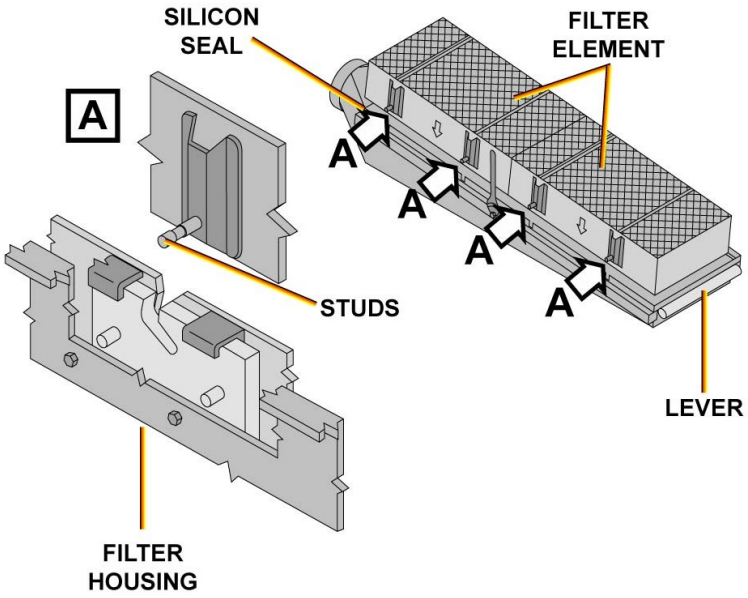

FILTER ELEMENTS REMOVAL AND INSTALLATION - INSTALLATION OF THE AFT FILTER ELEMENTS

Filter elements removal/installation

...
✓ Job set-up
...

✓ Aircraft maintenance configuration

✓ Safety precautions

...
✓ Procedure
...

✓ Removal of the forward filter elements

✓ Removal of the aft filter elements

✓ Installation of the forward filter elements

✓ Installation of the aft filter elements

...
✓ Close-up
...

TASK COMPLETED

FILTER ELEMENTS REMOVAL AND INSTALLATION - INSTALLATION OF THE AFT FILTER ELEMENTS

This Page Intentionally Left Blank

G7508471 - G3NT1T0 - FM21Y2BASEMCE03

AIRBUS S.A.S.
31707 BLAGNAC cedex, FRANCE
STM
REFERENCE G7508471
NOVEMBER 2008
PRINTED IN FRANCE
AIRBUS S.A.S. 2008
ALL RIGHTS RESERVED

AN EADS COMPANY

A330-200/300
TECHNICAL TRAINING MANUAL
MAINTENANCE COURSE - T1+T2 (LVL 2&3) (RR Trent 700)
AUTO FLIGHT

This document must be used for training purposes only

Under no circumstances should this document be used as a reference

It will not be updated.

All rights reserved
No part of this manual may be reproduced in any form,
by photostat, microfilm, retrieval system, or any other means,
without the prior written permission of AIRBUS S.A.S.

AIRBUS Environmental Recommendation
Please consider your environmental responsability before printing this document.

AUTO FLIGHT

Auto Flight Line Maintenance Briefing (2) 2

FLIGHT ENVELOPE

Flight Envelope General Description (3) 36
Flight Envelope Protection D/O (3) 42

FLIGHT GUIDANCE

Flight Guidance General Description (3) 54
Flight Guidance Autothrust D/O (3) 68
Flight Guidance Priority Logic D/O (3) 80
AP/FD & ATHR modes D/O (3) 92

FLIGHT MANAGEMENT

Flight Management General Description (3) 100
Flight Planning D/O (3) 104
Flight Management Priority Logic D/O (3) 108
Navigation Back-Up D/O (3) 112

AUTO FLIGHT SYSTEM

Power Interruptions and Power Up Tests D/O (3) 116

MAINTENANCE PRACTICE

Auto Flight System Base Maintenance (3) 124

G7508471 - G7OT0T0

AUTO FLIGHT LINE MAINTENANCE BRIEFING (2)

GENERAL

This module describes the operational use of the Automatic Flight System (AFS) and the Flight Management Guidance and Envelope Computers (FMGECs) in a normal operation with total availability of the concerned functions. The short-term pilot orders are normally entered through the Flight Control Unit (FCU) while the long-term pilot orders are entered through the MCDUs. Four key words for the control principle and both types of guidance have to be kept in mind in order to avoid handling errors.
Aircraft control is:
- either automatic, that means AutoPilot (AP) or AutoTHRust (A/THR),
- or manual, that means pilot action on side sticks or thrust levers.
Aircraft guidance is:
- either managed, that means targets are provided by the Flight Management (FM) functional part,
- or selected, that means targets are selected by the pilots through the FCU.

POWER-UP TEST FD ENGAGEMENT

As soon as electrical power is available, the Flight Director (FD) is automatically engaged provided that the power-up test is successful. No FD guidance symbols are displayed on the EFIS PFDs until take- off.

G7508471 - G7OT0T0 - FM22B1000000001

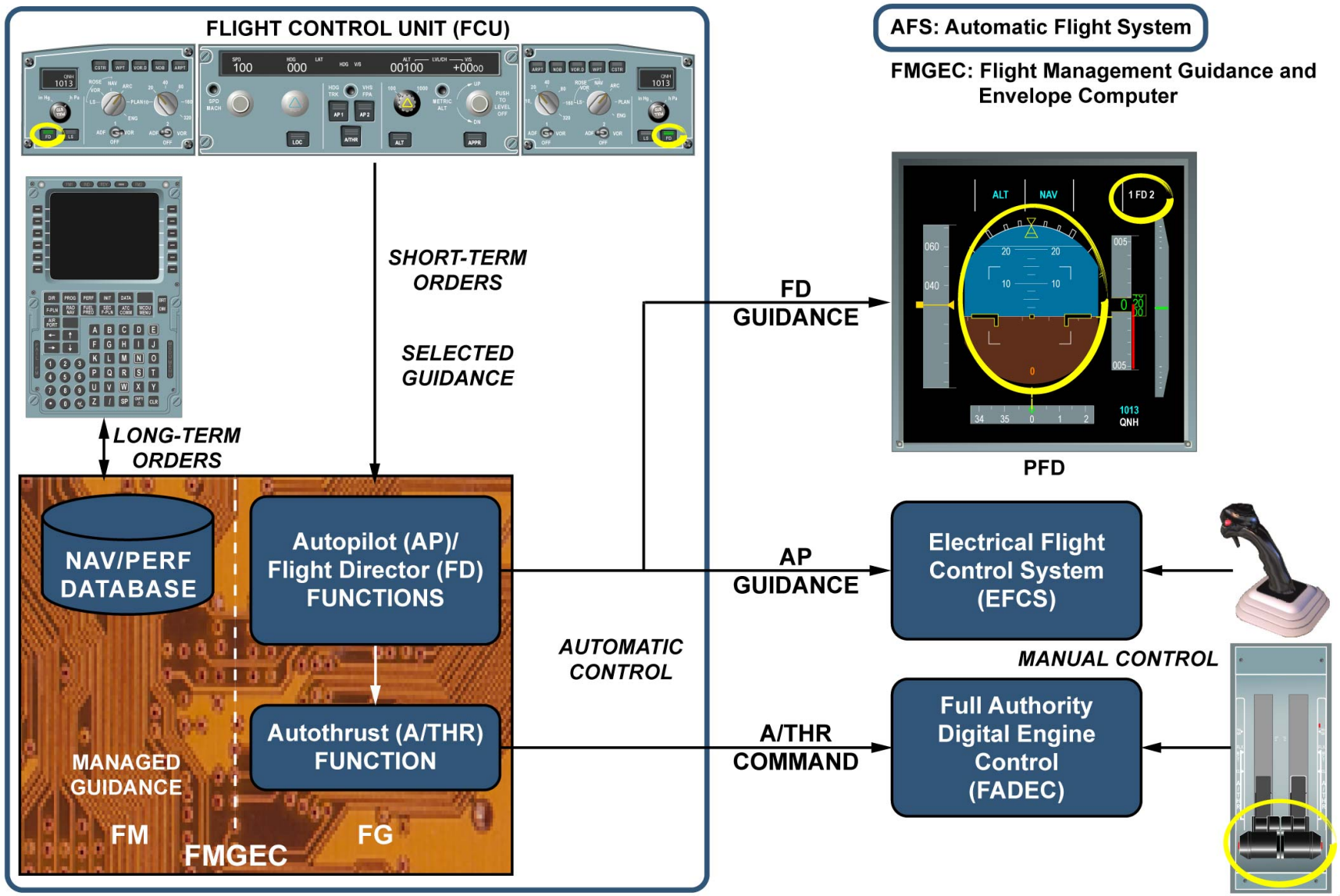

GENERAL & POWER-UP TEST FD ENGAGEMENT

AUTO FLIGHT LINE MAINTENANCE BRIEFING (2)

MCDU INITIALIZATION

The pilots use the MCDU for flight preparation, which includes:
- choice of the data base,
- flight plan initialization,
- radio navigation entries and checks,
- performance data entry such as V1 (decision speed), VR (rotation speed), V2 (take-off reference speed) and FLEX TEMP (flexible temperature) and weights.

Entry of the flight plan (lateral and vertical) and V2 into the MCDU is taken into account by the FM part and confirmed by the lighting of the related lights on the FCU to indicate that the system is in managed mode.
An altitude also has to be selected through the FCU.

G7508471 - G7OT0T0 - FM22B1000000001

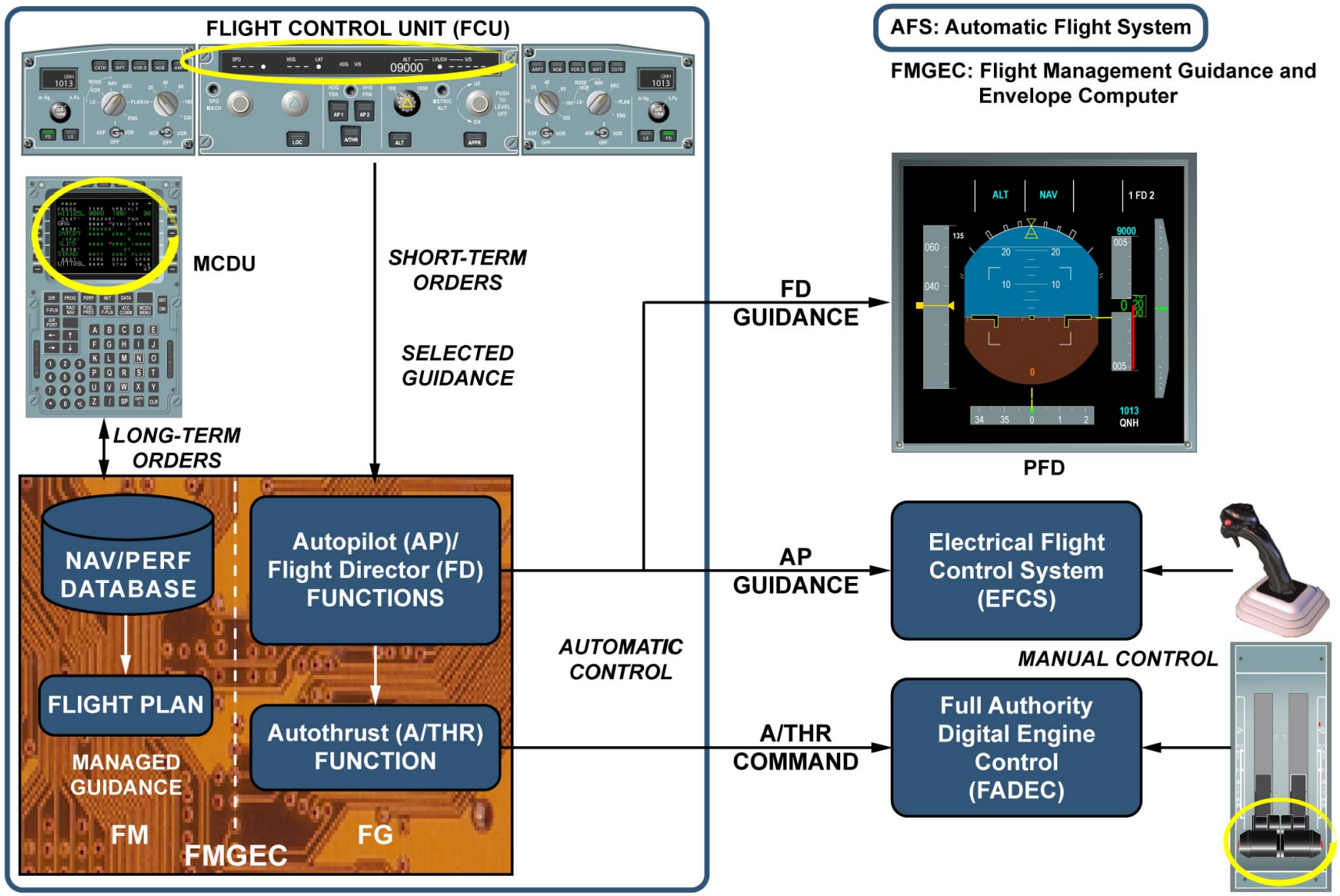

MCDU INITIALIZATION

AUTO FLIGHT LINE MAINTENANCE BRIEFING (2)

A/THR ENGAGEMENT

A/THR engagement depends on the position of the thrust levers for take-off. For take-off, the thrust levers are set to either the Take-Off/Go-Around (TO/GA) gate or the FLEXible-Maximum Continuous Thrust (FLEX-MCT) gate if a flexible temperature has been entered on the MCDU. When the pilot moves the thrust levers to the TO/GA gate, the FMGECs automatically engage the take-off operational modes for yaw and longitudinal guidance. The A/THR function is engaged (but it is not active) and the FD guidance symbols appear on the PFDs. At the thrust reduction altitude, the FM part warns the pilot to set the thrust levers to the CLimB gate.

NOTE: Note: The thrust levers will not normally leave this position until a RETARD audio message tells the pilots to set the thrust levers to the IDLE gate before touch-down.

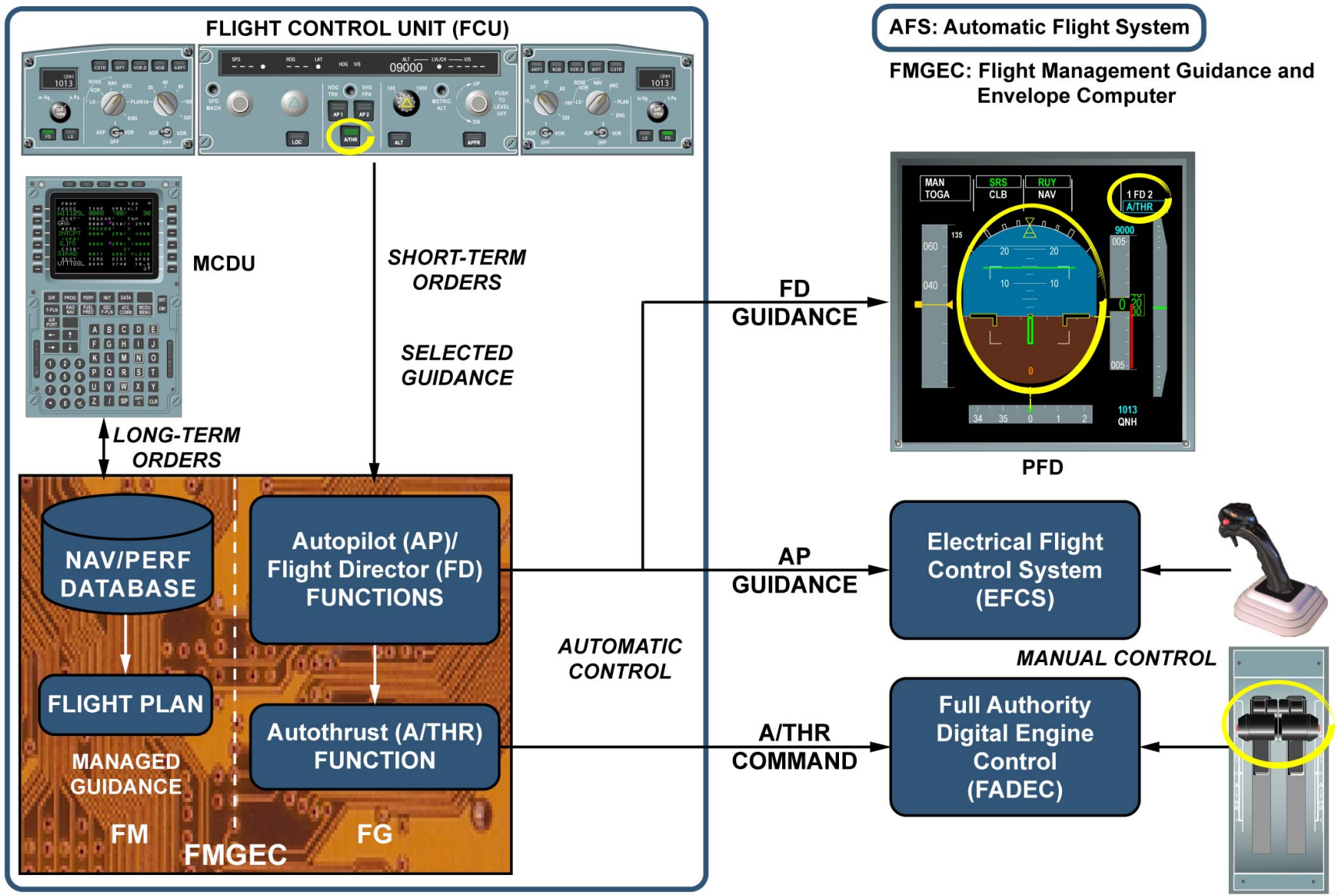

A/THR ENGAGEMENT

AUTO FLIGHT LINE MAINTENANCE BRIEFING (2)

AP ENGAGEMENT

Either AP can only be engaged 5 seconds after lift-off. Only one AP can be engaged at a time, the last in being the last engaged. After the normal climb, cruise and descent phases, the selection of automatic landing through the APProach FCU P/B lets the second AP be engaged. After touch-down, during roll-out, APs remain engaged to control the aircraft on the runway centerline. The pilots disengage APs at low speed or when the A/C is stopped.

G7508471 - G7OT0T0 - FM22B1000000001

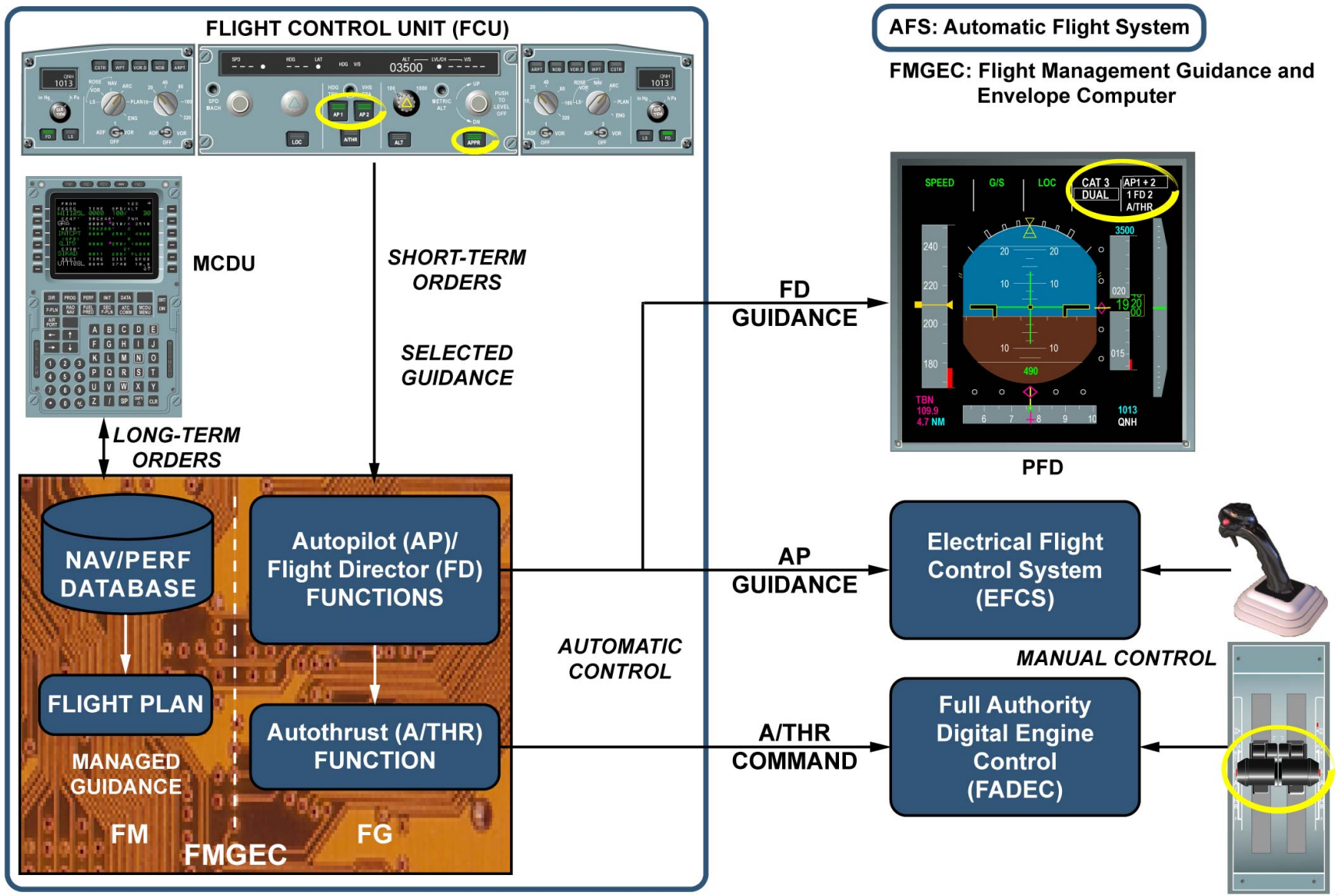

AP ENGAGEMENT

AUTO FLIGHT LINE MAINTENANCE BRIEFING (2)

DATA BASE LOADING

The navigation and performance data base must be loaded and updated to keep the system operational. Only the navigation data base is periodically updated (every 28 days). This module gives information related to the uploading and crossloading of the elements of the FM part of the FMGECs. The uploading is done using the Multipurpose Disk Drive Unit (MDDU).
The FM part of each FMGEC operates thanks to:
- the Flight Management System (FMS) operational software,
- the PERFormance and NAVigation data bases aid,
- the OPerational control Configuration (OPC),
- and the Airline Modifiable Information (AMI) configuration files which are mandatory loadable elements.

G7508471 - G7OT0T0 - FM22B1000000001

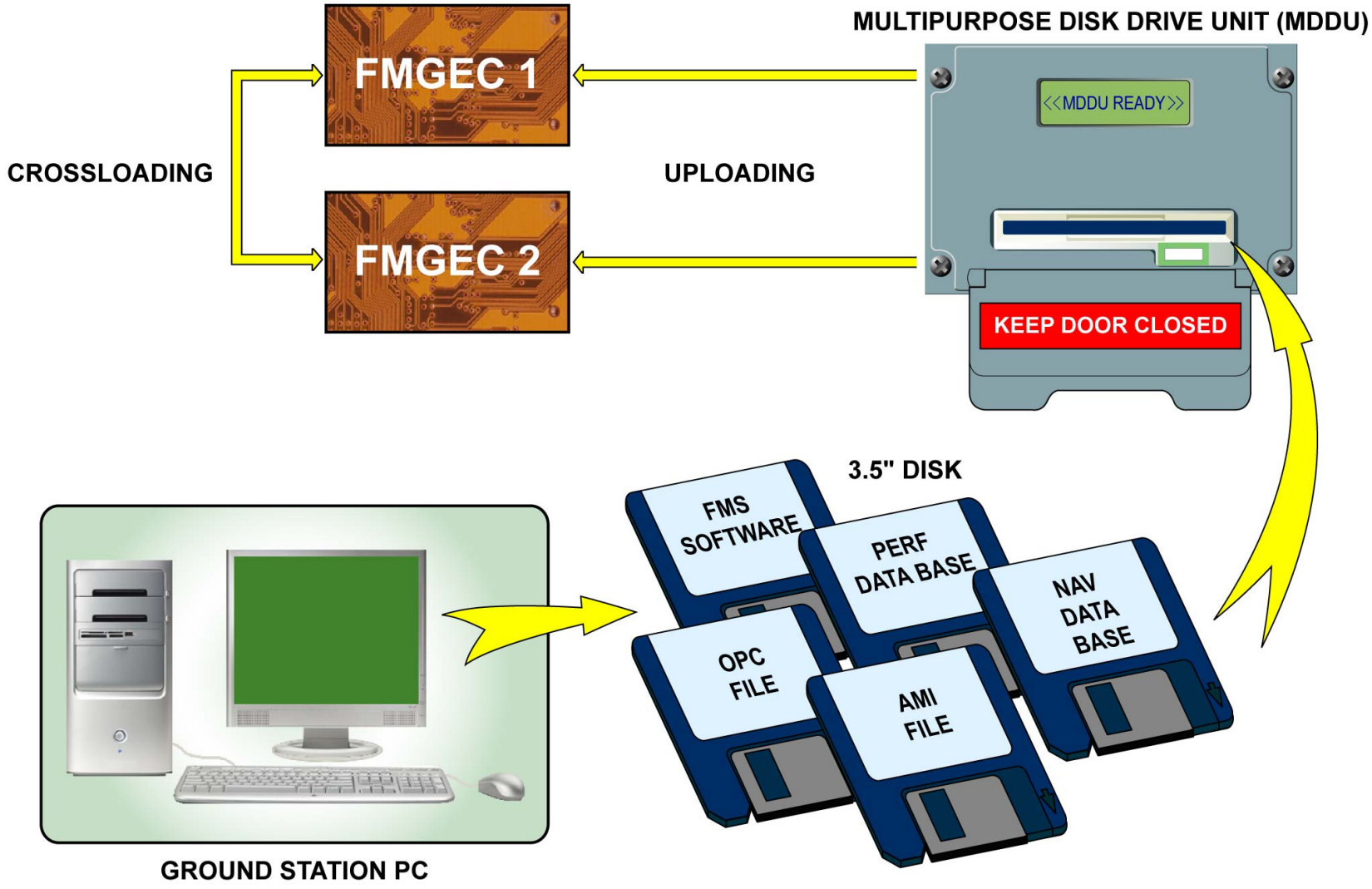

DATA BASE LOADING

AUTO FLIGHT LINE MAINTENANCE BRIEFING (2)

UPLOADING (WITH THE MDDU/DLS) AND CROSSLOADING OF DATA TO THE FMGEC

AIRCRAFT MAINTENANCE CONFIGURATION

Make sure that the FM source selector is in the NORM position.

G7508471 - G7OT0T0 - FM22B1000000001

UPLOADING (WITH THE MDDU/DLS) AND CROSSLOADING OF DATA OF THE FMGEC:

Aircraft maintenance configuration

On the panel 135VU, make sure that the SWITCHING/FM selector is in the NORM position.

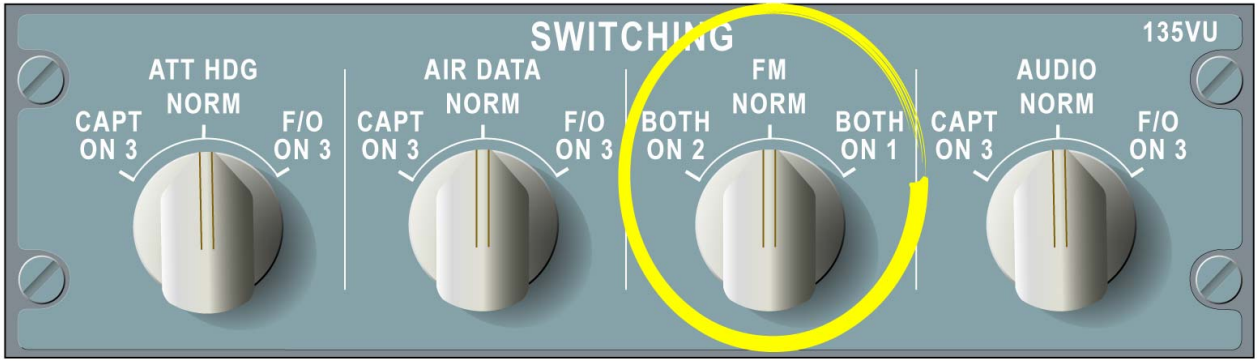

G7508471 - G7OT0T0 - FM22B1000000001

UPLOADING (WITH THE MDDU/DLS) AND CROSSLOADING OF DATA TO THE FMGEC - AIRCRAFT MAINTENANCE CONFIGURATION

AUTO FLIGHT LINE MAINTENANCE BRIEFING (2)

UPLOADING (WITH THE MDDU/DLS) AND CROSSLOADING OF DATA TO THE FMGEC (continued)

CHECK OF THE LOADABLE ELEMENTS P/N REFERENCE

The check of the P/N reference of the loadable elements is done through the applicable P/N STATUS page. Make sure that the software P/N reference, displayed on the related P/N STATUS page, is different from the P/N on the related floppy disk. To determine which elements need to be loaded: Push the DATA mode key on the MCDU and get access to the A/C STATUS page. Then select the SOFTWARE STATUS/XLOAD indication to display the P/N XLOAD page.
To get access to the FM operational software (page 2/6), push the line key adjacent to the NEXT PAGE of the page 1/6.
Make sure that the P/N reference is not the same as the P/N reference on the disk. Otherwise the uploading is not necessary.
Make sure that the P/N reference is not the same as the P/N reference on the disk. Otherwise the uploading is not necessary.

UPLOADING (WITH THE MDDU/DLS) AND CROSSLOADING OF DATA OF THE FMGEC:

Check of the P/N reference status of the element(s) (pre-load in the related FMGEC

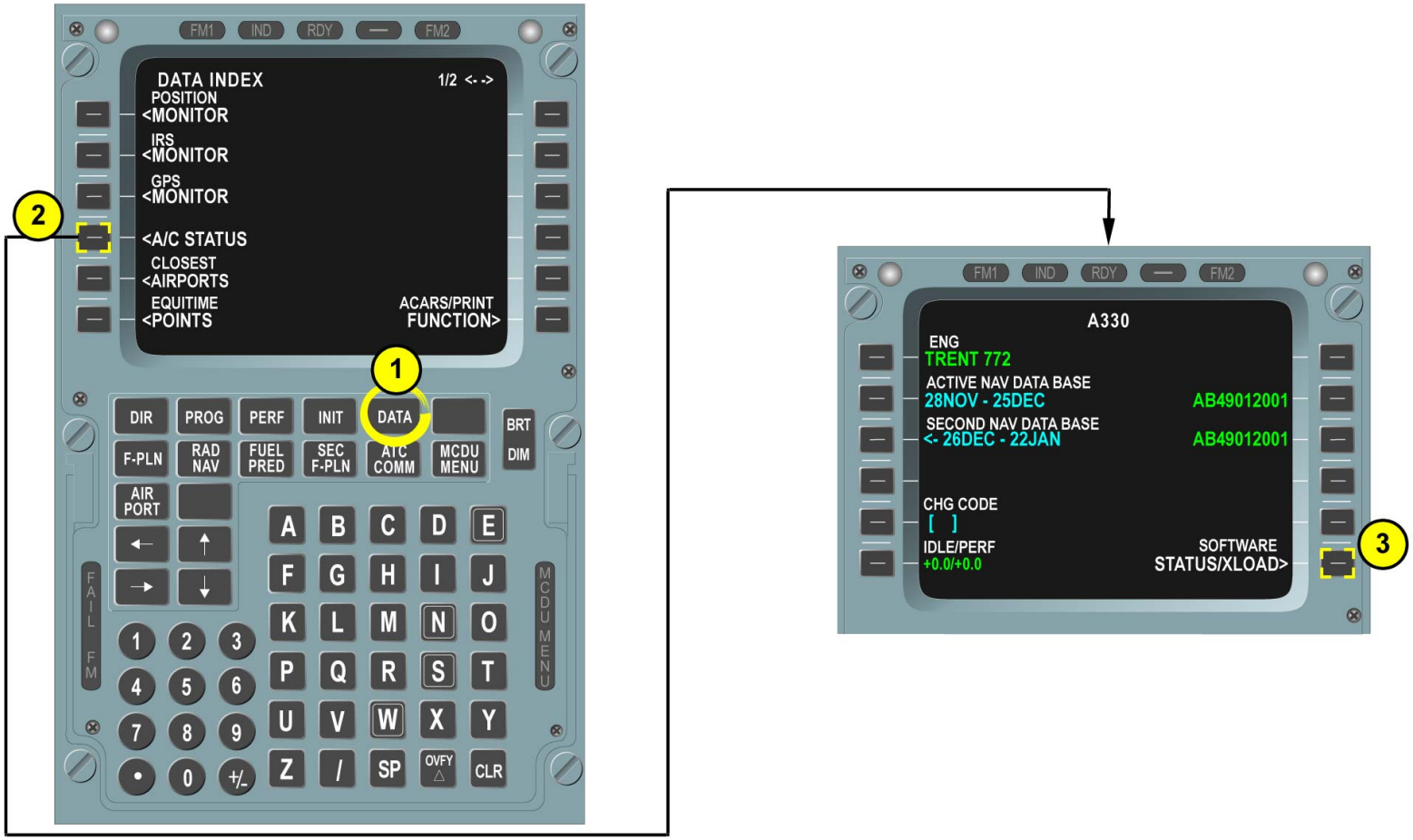

UPLOADING (WITH THE MDDU/DLS) AND CROSSLOADING OF DATA TO THE FMGEC - CHECK OF THE LOADABLE ELEMENTS P/N REFERENCE

UPLOADING (WITH THE MDDU/DLS) AND CROSSLOADING OF DATA OF THE FMGEC:

Check of the P/N reference status of the element(s) (pre-load in the related FMGEC

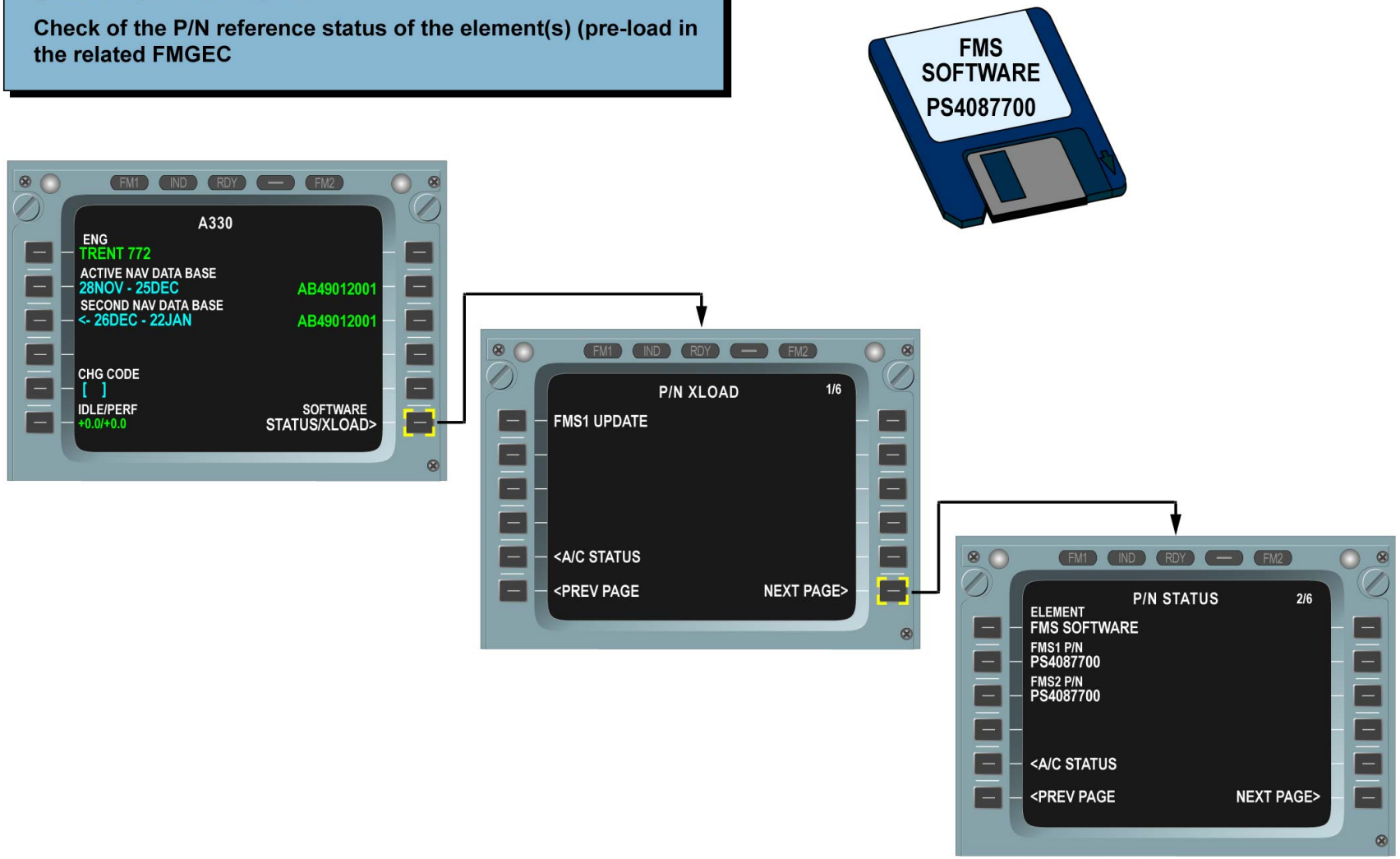

UPLOADING (WITH THE MDDU/DLS) AND CROSSLOADING OF DATA TO THE FMGEC - CHECK OF THE LOADABLE ELEMENTS P/N REFERENCE

UPLOADING (WITH THE MDDU/DLS) AND CROSSLOADING OF DATA OF THE FMGEC:

Check of the P/N reference status of the element(s) (pre-load in the related FMGEC

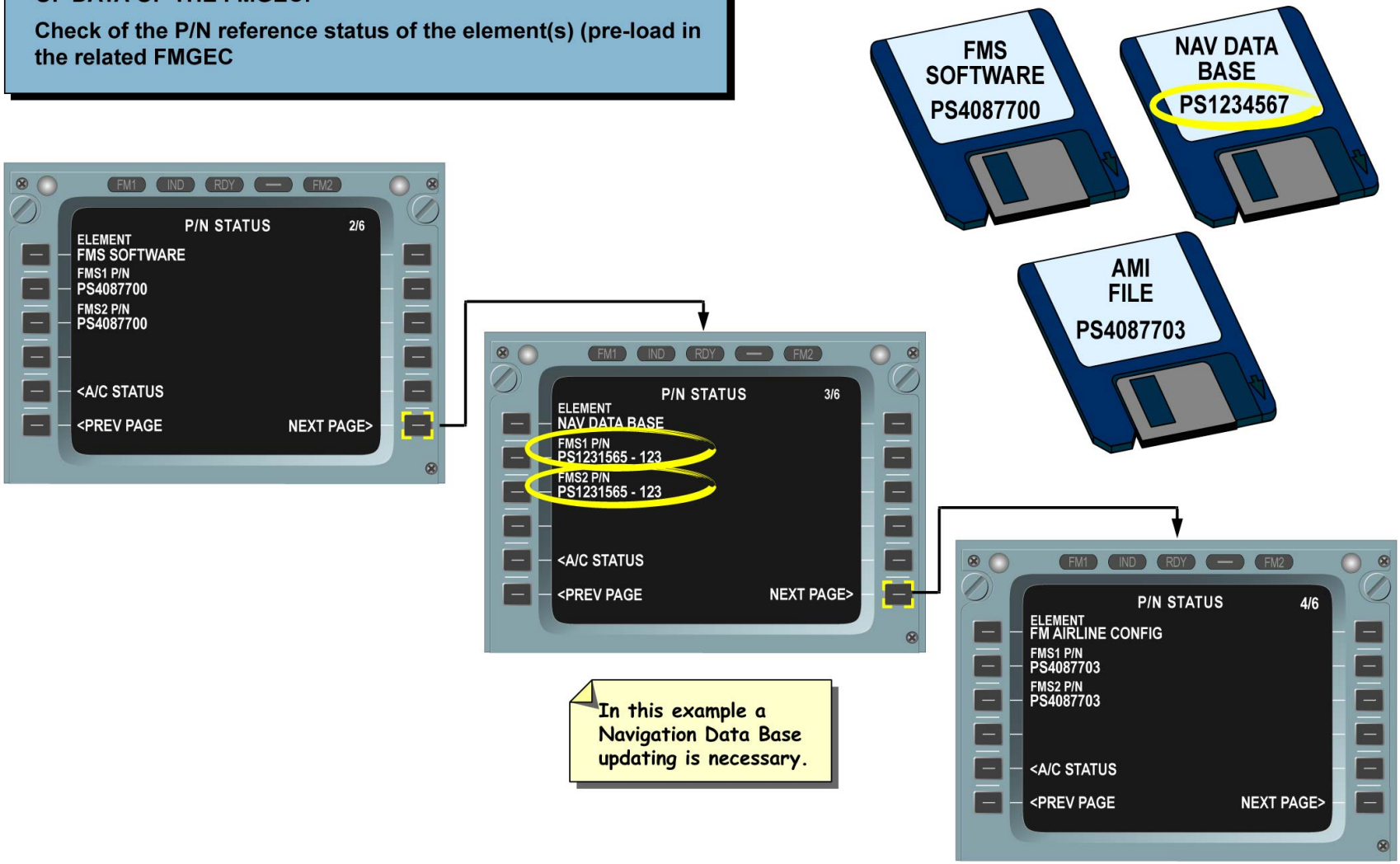

UPLOADING (WITH THE MDDU/DLS) AND CROSSLOADING OF DATA TO THE FMGEC - CHECK OF THE LOADABLE ELEMENTS P/N REFERENCE

UPLOADING (WITH THE MDDU/DLS) AND CROSSLOADING OF DATA OF THE FMGEC:

Check of the P/N reference status of the element(s) (pre-load in the related FMGEC

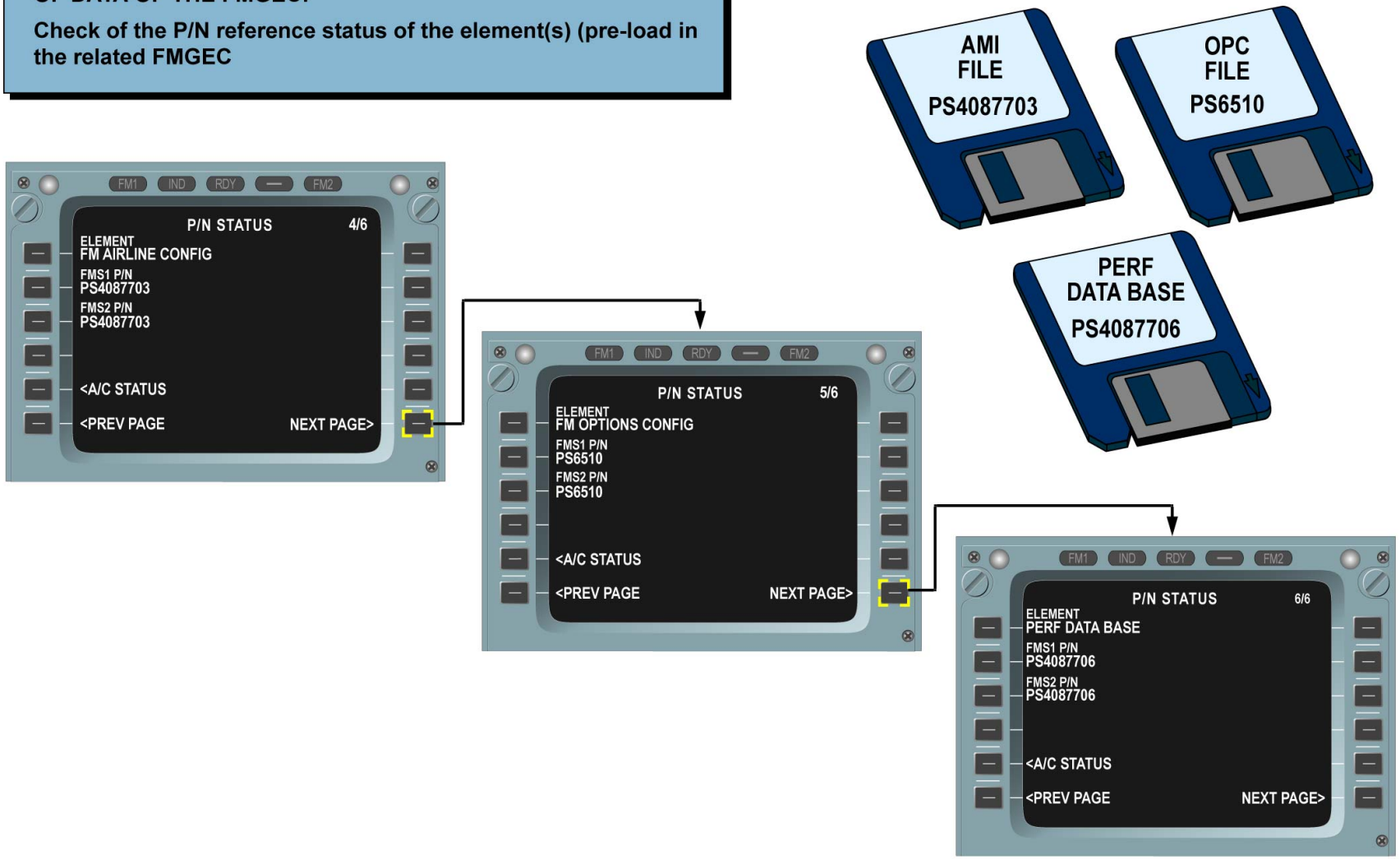

UPLOADING (WITH THE MDDU/DLS) AND CROSSLOADING OF DATA TO THE FMGEC - CHECK OF THE LOADABLE ELEMENTS P/N REFERENCE

This Page Intentionally Left Blank

G7508471 - G7OT0T0 - FM22B1000000001

AUTO FLIGHT LINE MAINTENANCE BRIEFING (2)

UPLOADING (WITH THE MDDU/DLS) AND CROSSLOADING OF DATA TO THE FMGEC (continued)

UPLOADING OF THE FMGEC

Open one of the two FMGECs C/Bs on the RESET panel. On the Data Loading Selector (DLS) select the applicable FMGEC.
Insert the applicable disk into the MDDU. Close the applicable FMGEC C/B. Monitor the data transfer and make a check on completion on the MDDU.
Remove the disk and deselect the FMGEC through the DLS. Reset the loaded FMGEC.
Check through the related P/N STATUS page that the displayed software P/N reference is identical to the P/N reference read on the relevant disk.

NOTE: When the FMGEC power-up is completed, and if the opposite FMGEC is not yet uploaded, the amber IND annunciator comes on both MCDUs, and the INDEPENDENT OPERATION indication appears on each MCDU scratchpad.

G7508471 - G7OT0T0 - FM22B1000000001

UPLOADING (WITH THE MDDU/DLS) AND CROSSLOADING OF DATA OF THE FMGEC:

Uploading of the FMGEC

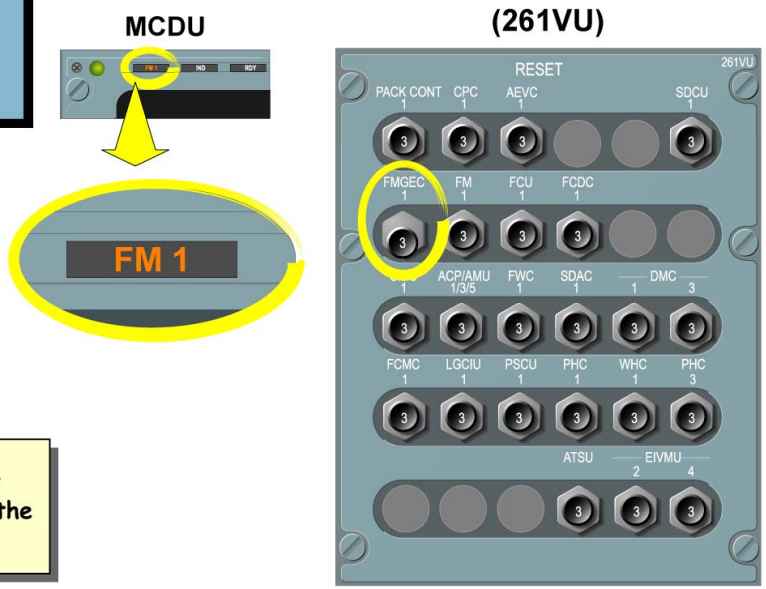

Open the reset FMGEC 1 circuit breaker and select FMGEC 1 with the Data Loading Selector (DLS).

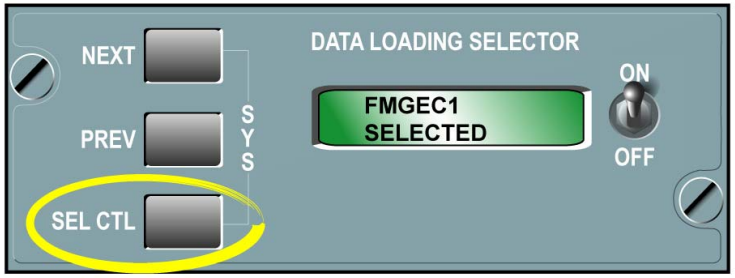

DATA LOADING SELECTOR (DLS)

UPLOADING (WITH THE MDDU/DLS) AND CROSSLOADING OF DATA TO THE FMGEC - UPLOADING OF THE FMGEC

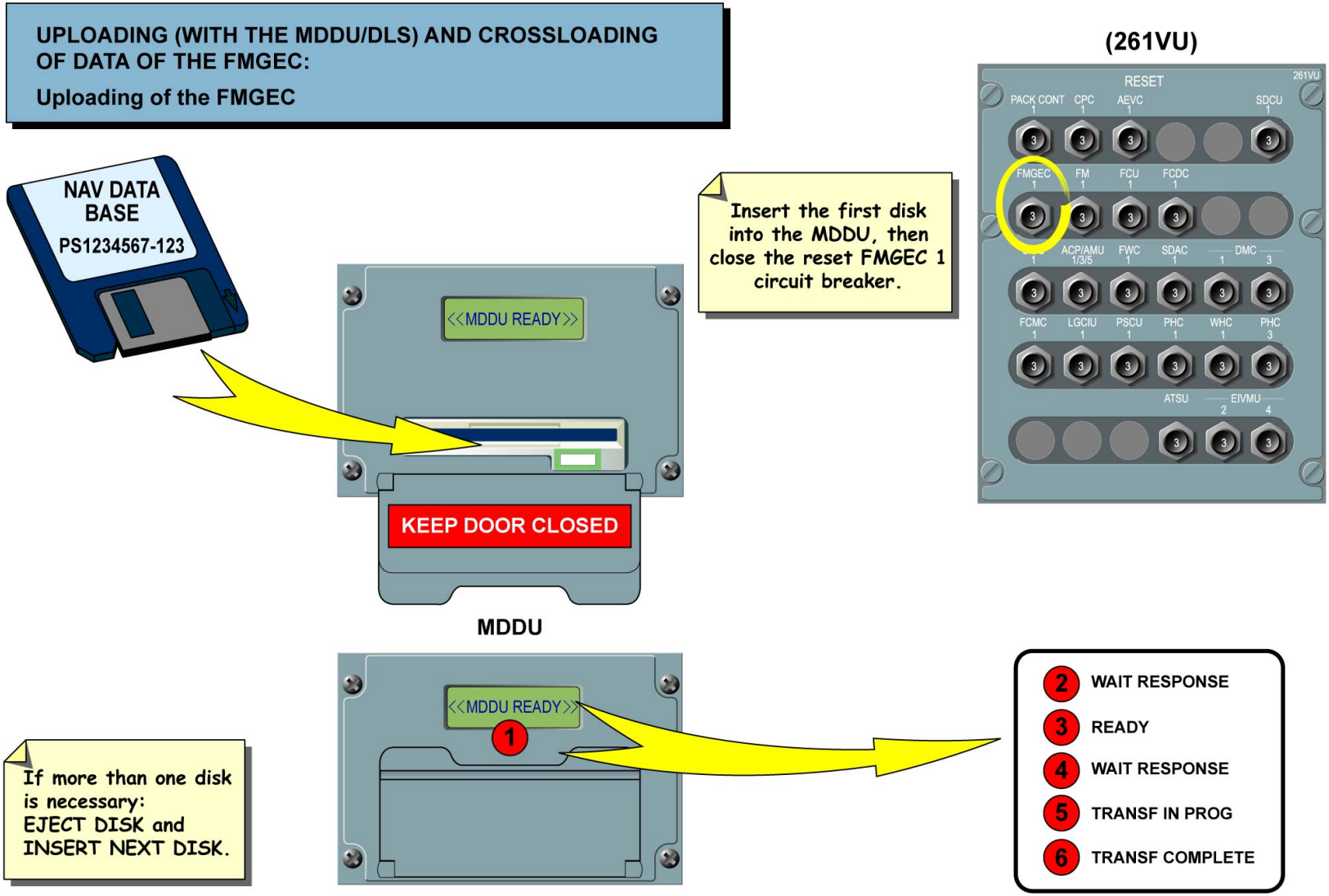

UPLOADING (WITH THE MDDU/DLS) AND CROSSLOADING OF DATA TO THE FMGEC - UPLOADING OF THE FMGEC

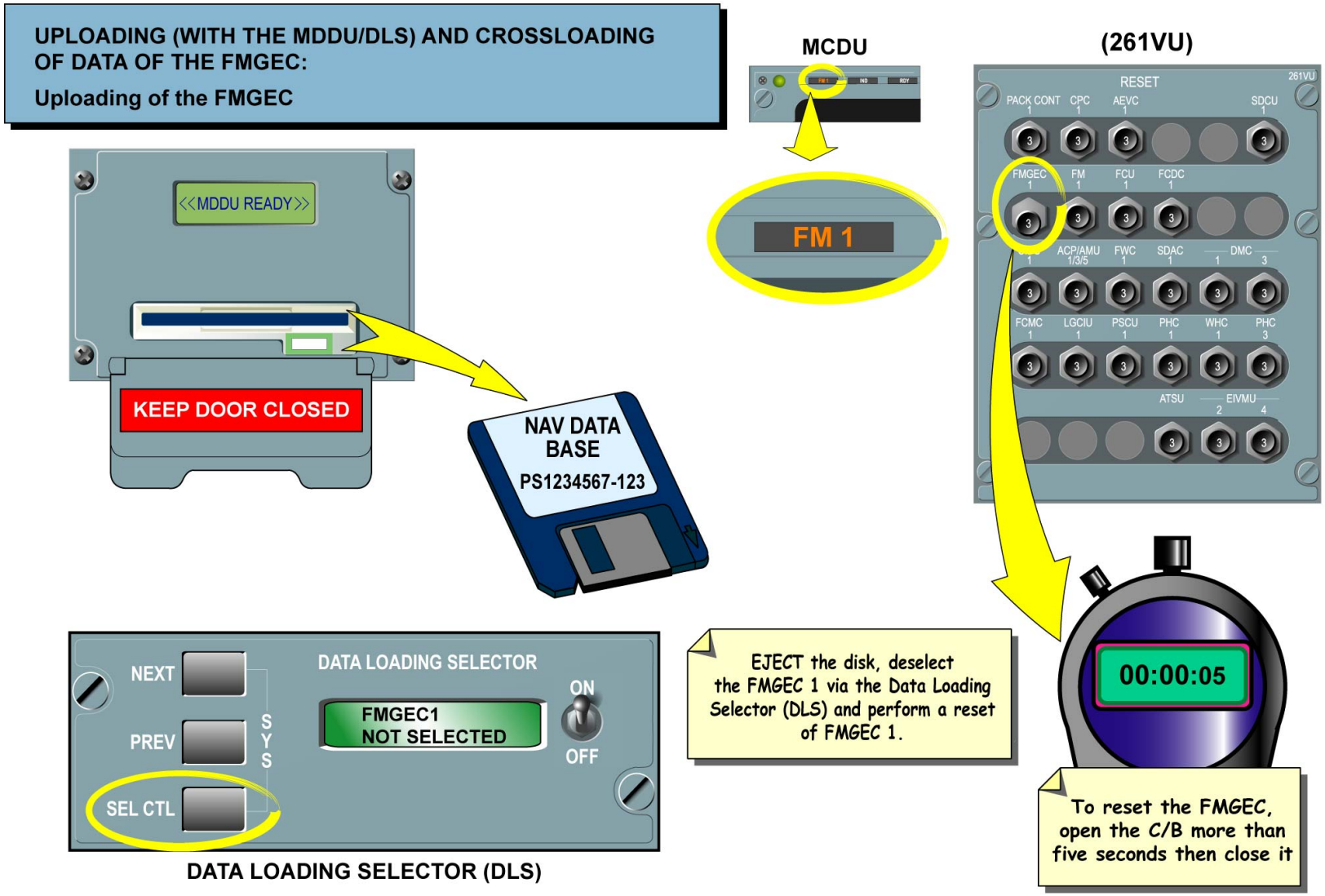

UPLOADING (WITH THE MDDU/DLS) AND CROSSLOADING OF DATA TO THE FMGEC - UPLOADING OF THE FMGEC

UPLOADING (WITH THE MDDU/DLS) AND CROSSLOADING OF DATA OF THE FMGEC:

Uploading of the FMGEC

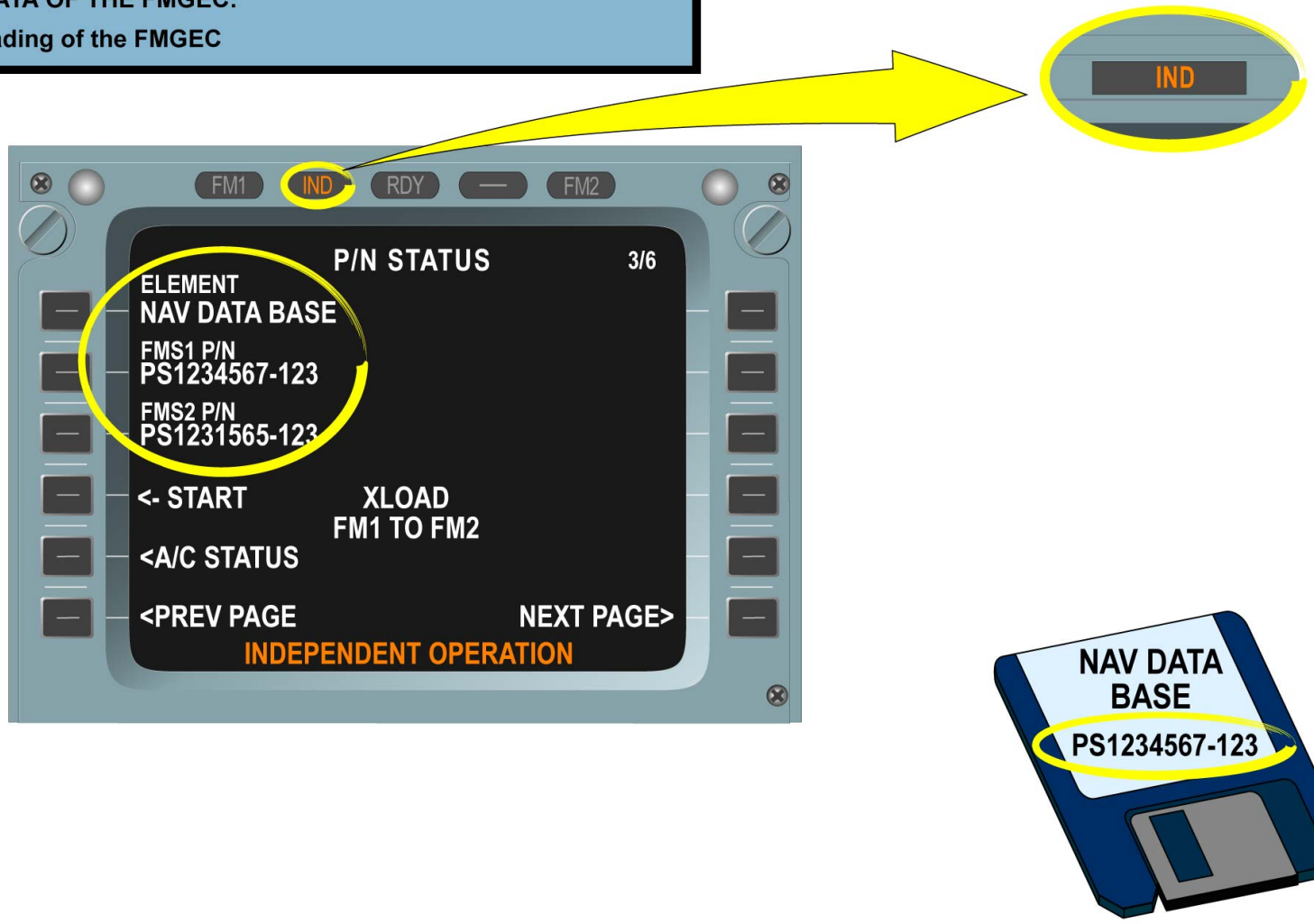

UPLOADING (WITH THE MDDU/DLS) AND CROSSLOADING OF DATA TO THE FMGEC - UPLOADING OF THE FMGEC

This Page Intentionally Left Blank

G7508471 - G7OT0T0 - FM22B1000000001

AUTO FLIGHT LINE MAINTENANCE BRIEFING (2)

UPLOADING (WITH THE MDDU/DLS) AND CROSSLOADING OF DATA TO THE FMGEC (continued)

CROSSLOADING PROCEDURE

When the uploading of the first FMGEC is completed, the XLOAD function can be used for the loading of the opposite FMGEC. In our example, we will XLOAD the FMGEC2 from the FMGEC1.
If all the elements have to be crossloaded, a Flight Management System (FMS) UPDATE can be done through the P/N XLOAD page. Otherwise, use the P/N STATUS page related to the element, which has to be crossloaded. In both cases, the crossloading will be done from the MCDU related to the FMGEC already uploaded (MCDU 1 in our example). On the applicable P/N STATUS page, make sure that FMS1 and FMS2 have different P/Ns. Push the START XLOAD key to activate the loadable elements compatibility check. Then confirm your selection to activate the crossloading process.
When the crossloading is completed, reset the loaded FMGEC. Make sure that both FMGECs are no longer in independent mode operation. The amber IND annunciator and the INDEPENDENT OPERATION indication go off. Check through the related P/N STATUS page that the displayed software P/N reference is identical to the P/N reference read on the relevant disk. The procedure is now completed; you know how to upload and crossload data from a disk to the FMGEC, via the MDDU, the DLS and the MCDU.

G7508471 - G7OT0T0 - FM22B1000000001

UPLOADING (WITH THE MDDU/DLS) AND CROSSLOADING OF DATA OF THE FMGEC:

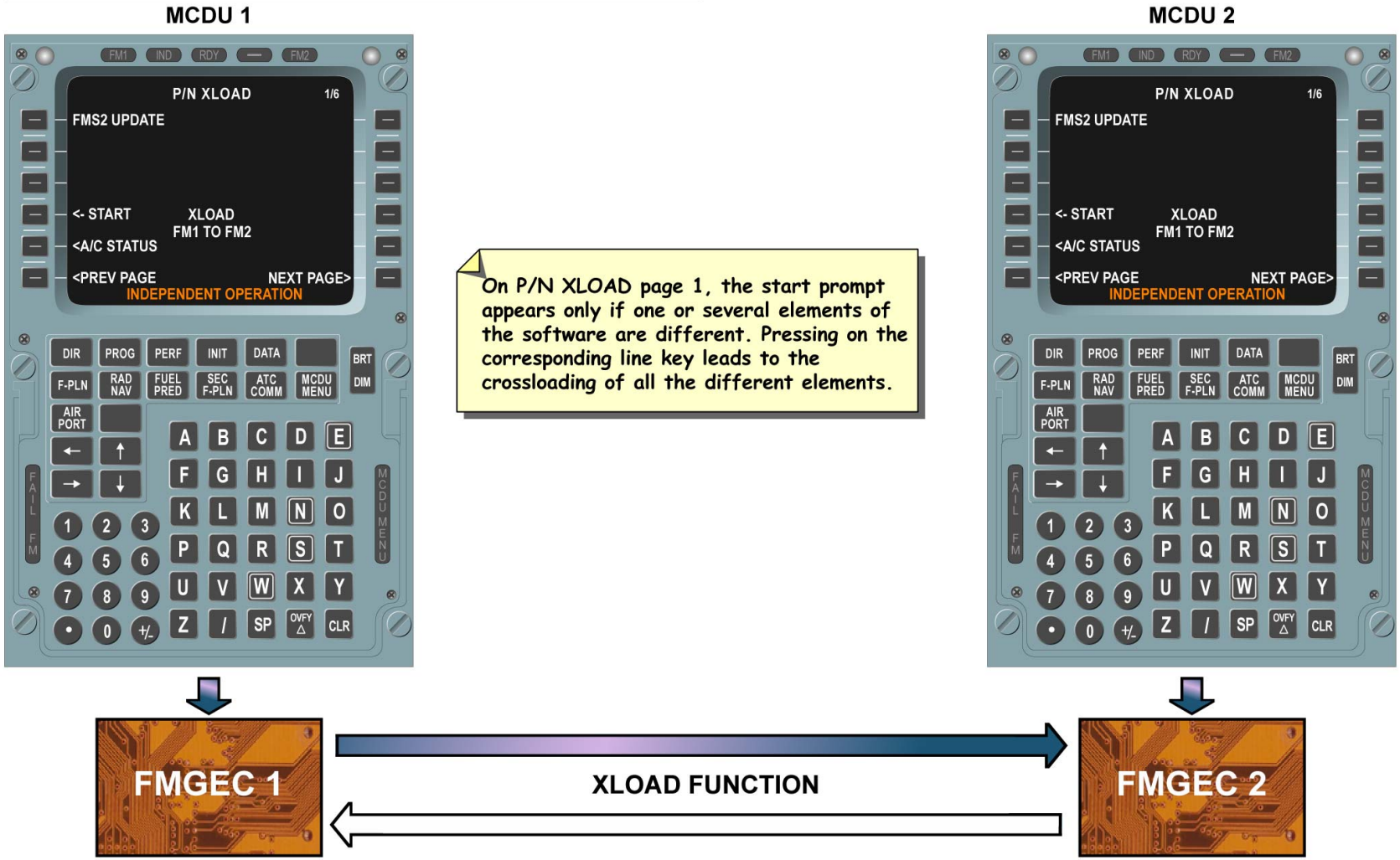

UPLOADING (WITH THE MDDU/DLS) AND CROSSLOADING OF DATA TO THE FMGEC - CROSSLOADING PROCEDURE

UPLOADING (WITH THE MDDU/DLS) AND CROSSLOADING OF DATA OF THE FMGEC:

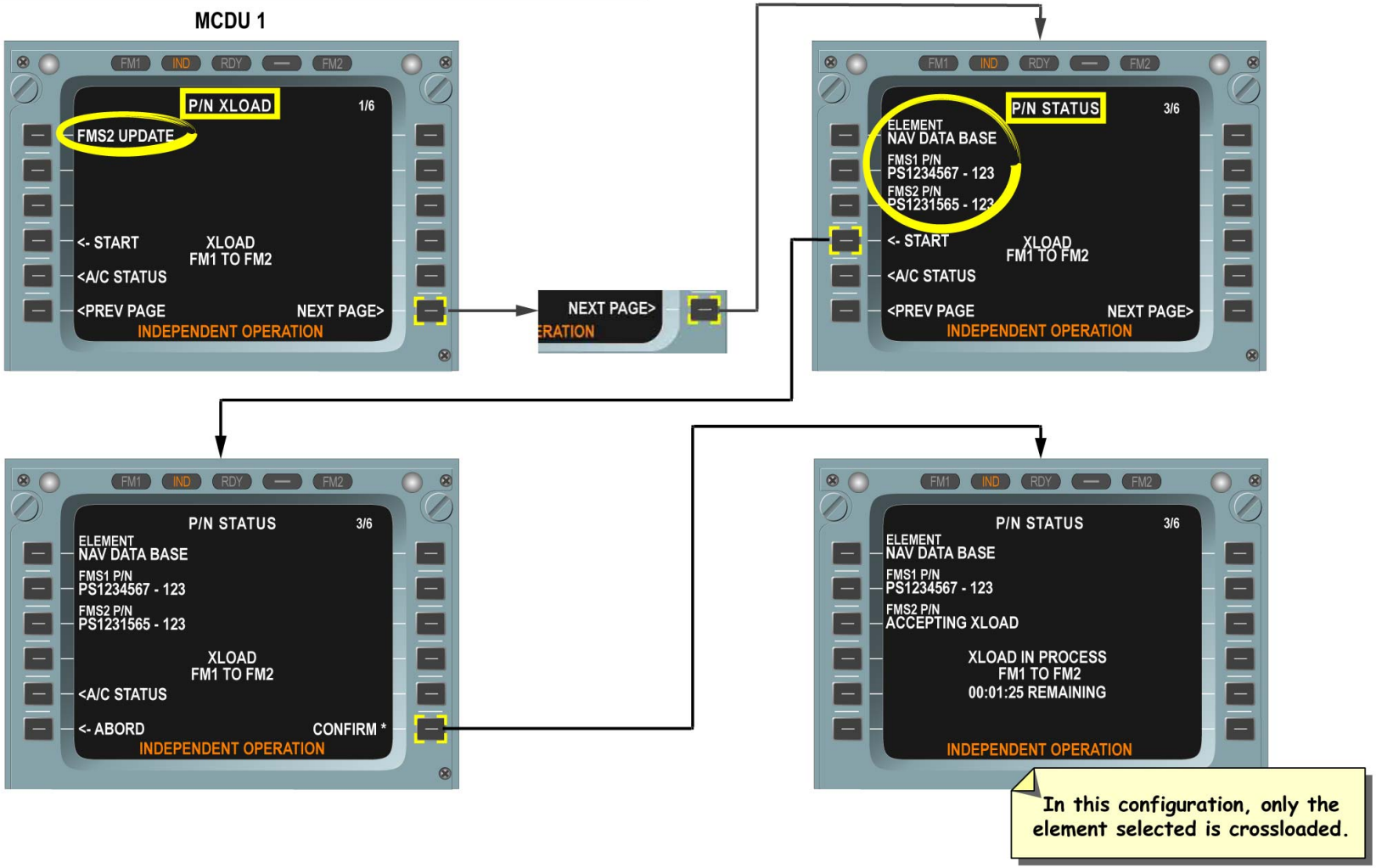

UPLOADING (WITH THE MDDU/DLS) AND CROSSLOADING OF DATA TO THE FMGEC - CROSSLOADING PROCEDURE

G7508471 - G7OT0T0 - FM22B100000001

UPLOADING (WITH THE MDDU/DLS) AND CROSSLOADING OF DATA OF THE FMGEC:

Uploading of the FMGEC

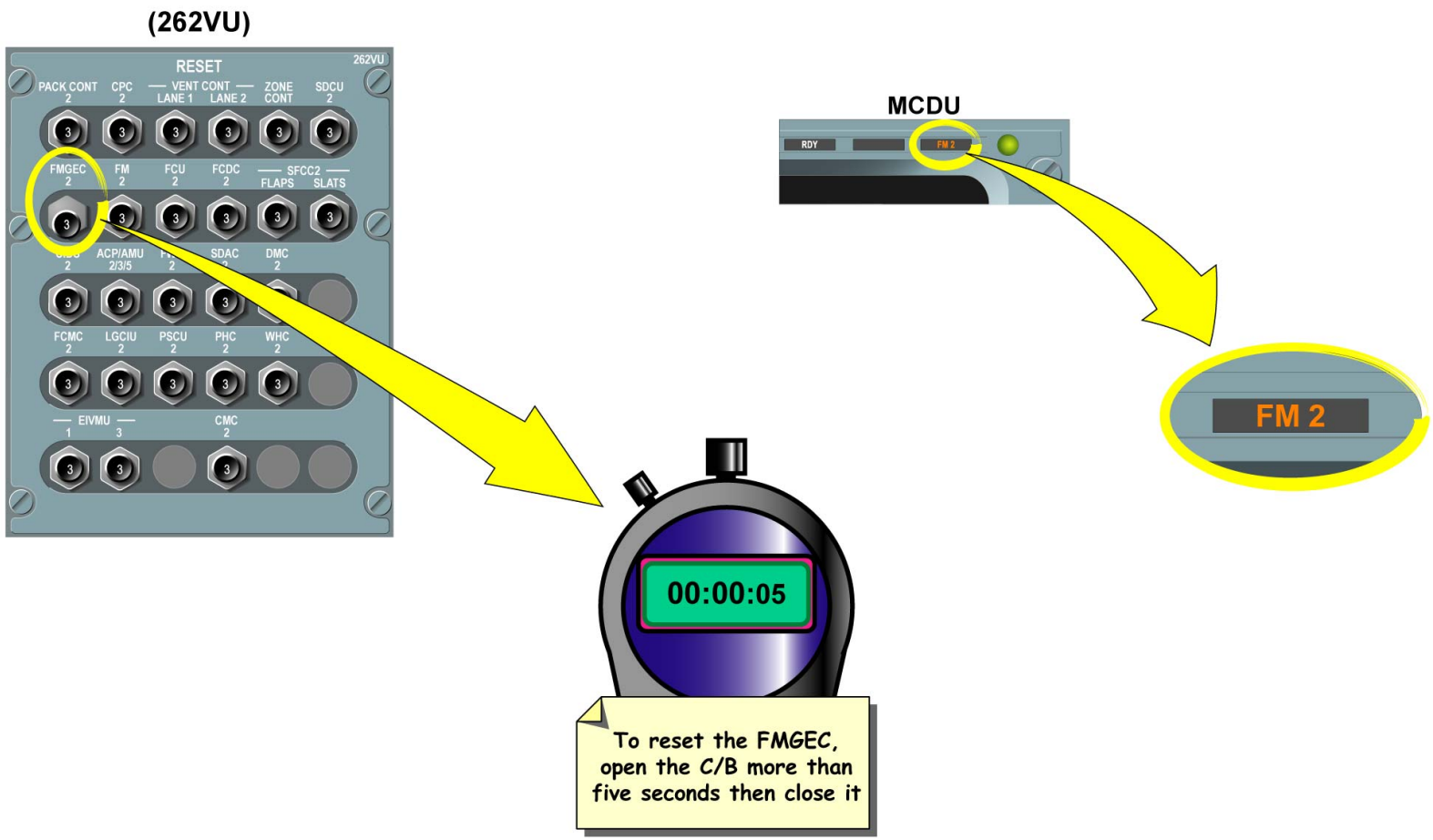

UPLOADING (WITH THE MDDU/DLS) AND CROSSLOADING OF DATA TO THE FMGEC - CROSSLOADING PROCEDURE

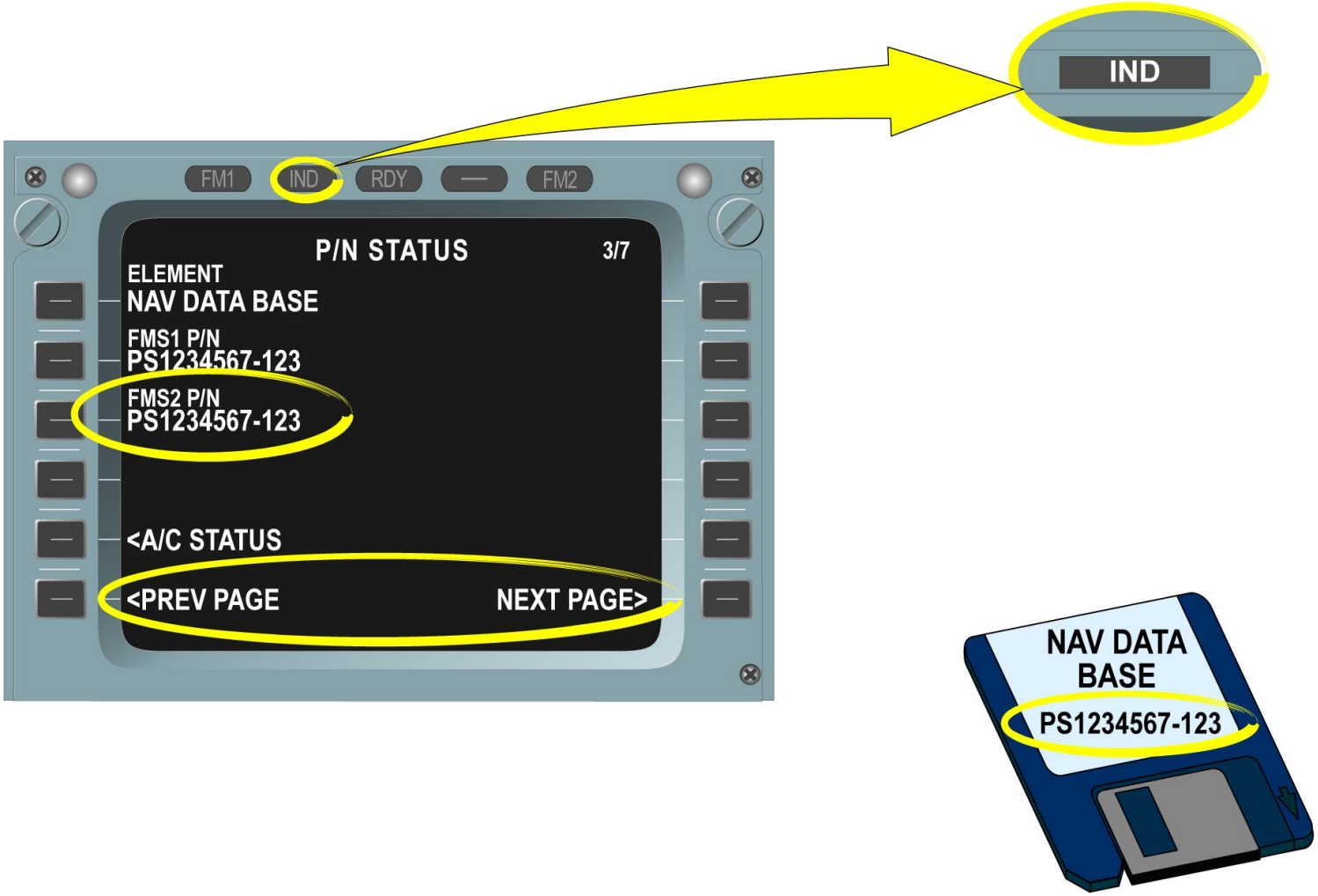

UPLOADING (WITH THE MDDU/DLS) AND CROSSLOADING OF DATA TO THE FMGEC - CROSSLOADING PROCEDURE

This Page Intentionally Left Blank

G7508471 - G7OT0T0 - FM22B1000000001

AUTO FLIGHT LINE MAINTENANCE BRIEFING (2)

MAINTENANCE TIPS

DELETE A FLIGHT PLAN FROM THE MCDU INIT A PAGE

To carry out some maintenance actions, it can be necessary to enter a basic flight plan, for example to make an engine run-up. The process below explains how to delete such a flight plan, leaving the "INIT A" page in its initial condition.
On MCDU 1 or 2, press the "DATA" mode key, "DATA INDEX page 1" appears. Select "A/C STATUS" page, select "SECOND DATA BASE", wait a few seconds: ACTIVE and SECOND DATA BASE dates and numbers are transposed. The flight plan data is deleted. Select "SECOND DATA BASE" again (the data base lines are retransposed). Verify the "ACTIVE DATA BASE" is valid (not out of date). Press "INIT" mode key and verify that "INIT A" page is erased.

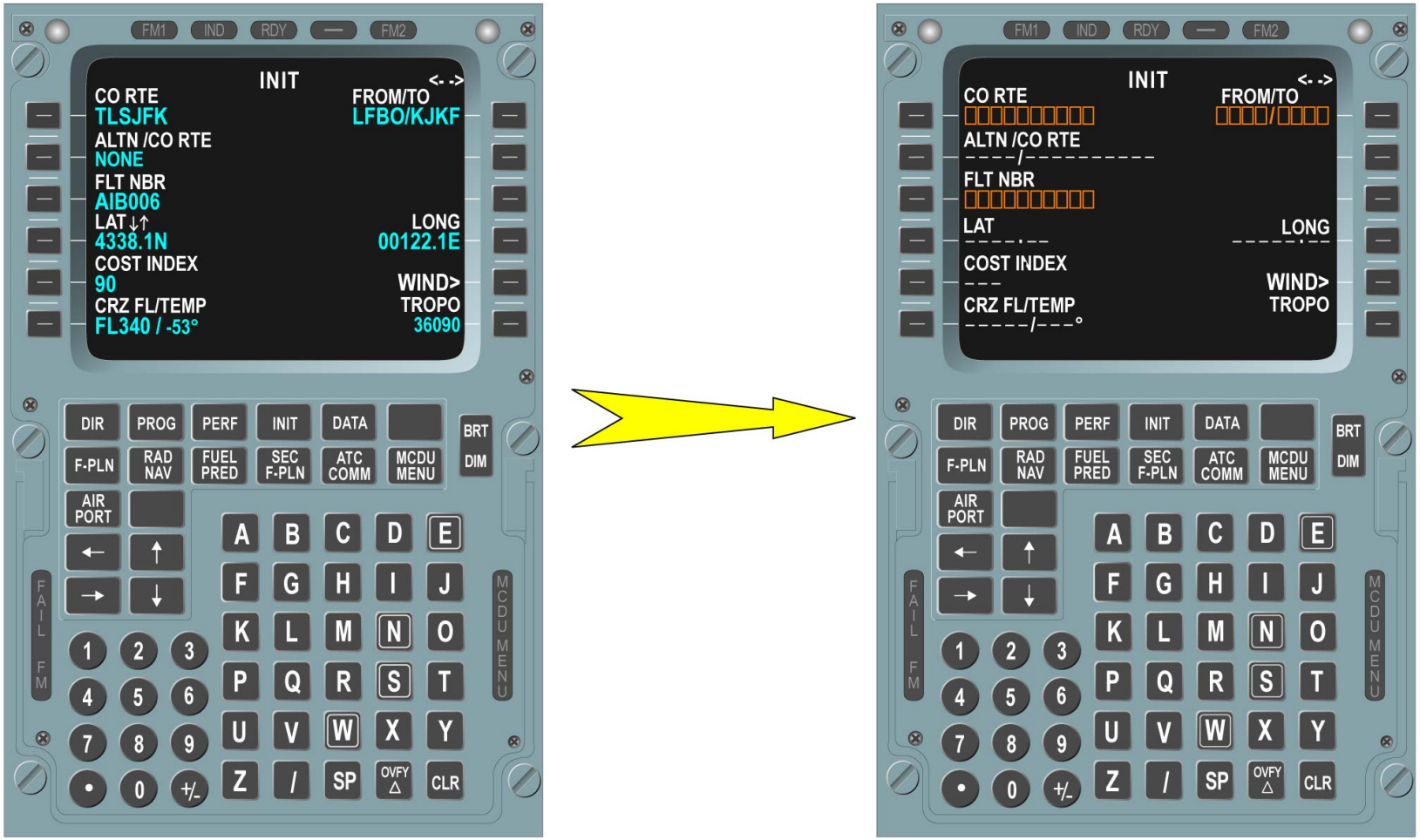

MAINTENANCE TIPS - DELETE A FLIGHT PLAN FROM THE MCDU INIT A PAGE

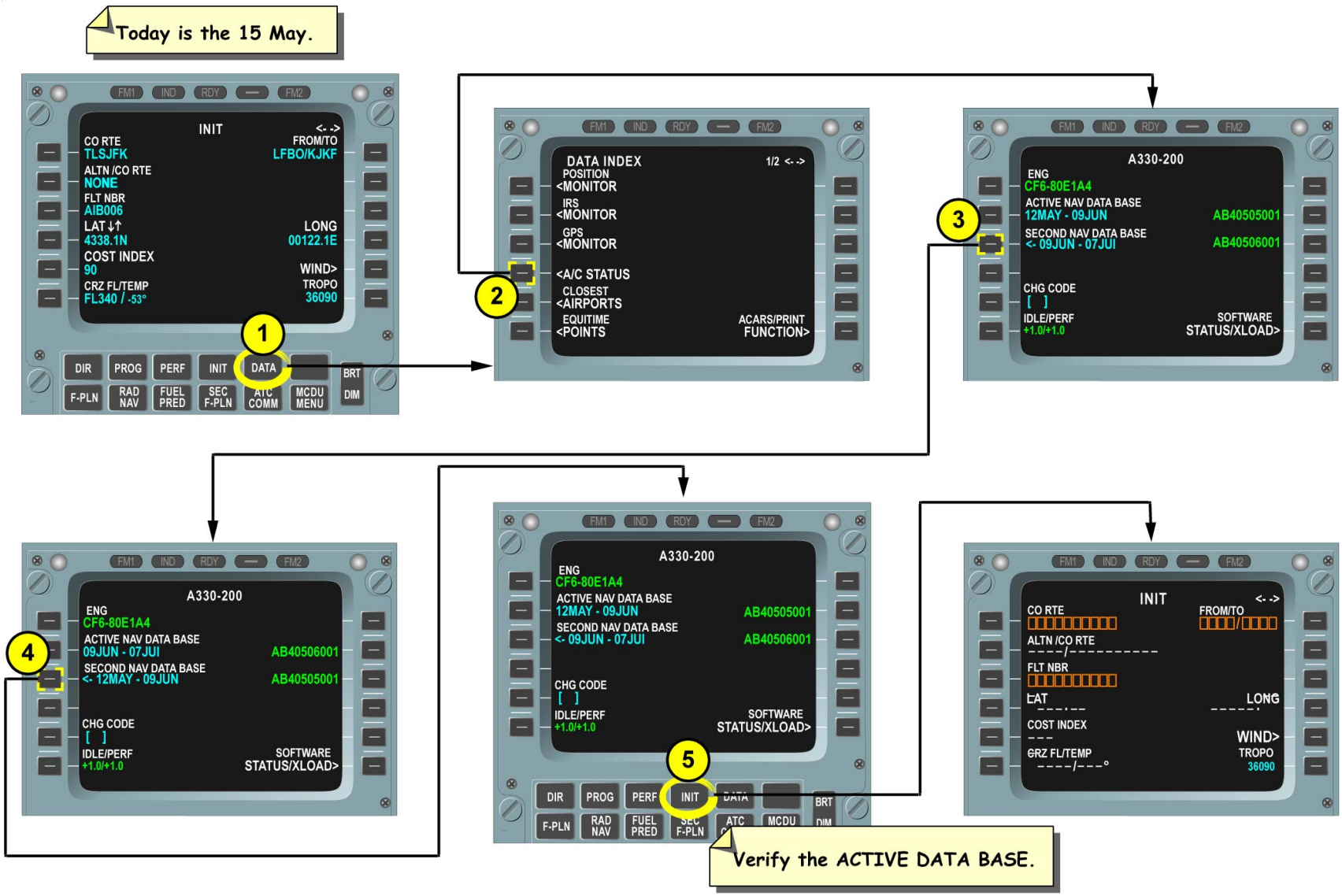

MAINTENANCE TIPS - DELETE A FLIGHT PLAN FROM THE MCDU INIT A PAGE

G7508471 - G7OT0T0 - FM22B100000001

This Page Intentionally Left Blank

G7508471 - G7OT0T0 - FM22B1000000001

FLIGHT ENVELOPE GENERAL DESCRIPTION (3)

GENERAL

In addition to the acquisition of the aircraft parameters used by the Auto Flight System (AFS), the Flight Envelope (FE) function basically consists of the speed envelope computation and the detection of abnormal flight conditions.

G7508471 - G7OT0T0 - FM22DB000000001

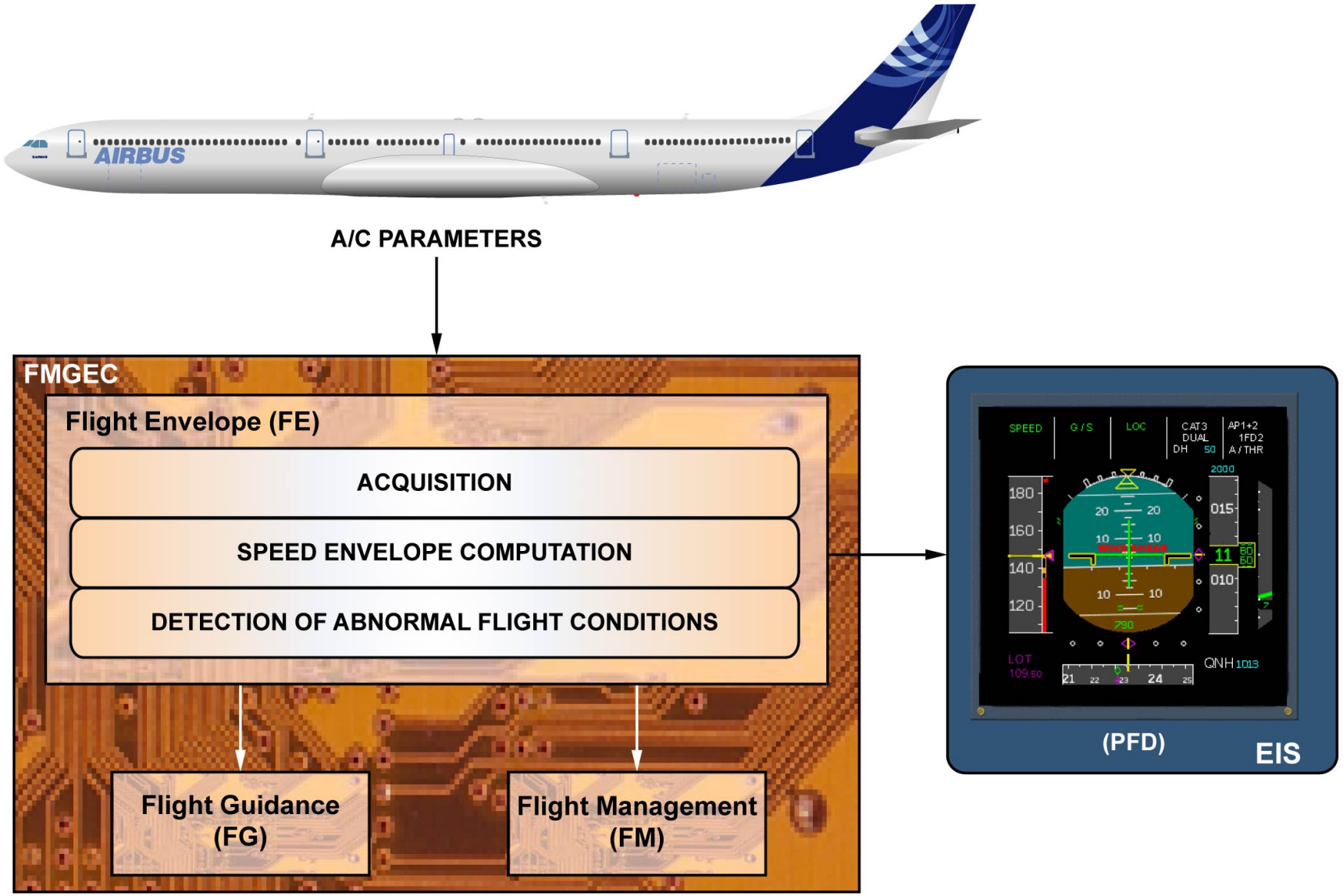

GENERAL

G7508471 - G7OT0T0 - FM22DB000000001

FLIGHT ENVELOPE GENERAL DESCRIPTION (3)

ACQUISITION AND MONITORING

The Flight Envelope function ensures the acquisition and monitoring of the various aircraft parameters used by the Flight Envelope, Flight Guidance (FG) and Flight Management (FM) functions except those specific to the Flight Management.
In particular, the Flight Envelope function acquires the alphafloor detection signal computed from the Flight Control Primary Computers (FCPCs) and, if valid, sends it to the Flight Guidance function for alphafloor protection.
Dialog between the three functional parts takes place via two common memories, one between the Flight Envelope and the Flight Guidance part, another between the Flight Guidance and the Flight Management part.

AIRCRAFT CONFIGURATION

The Flight Envelope function determines the aircraft configuration specifically for the Flight Envelope and Flight Guidance functions.
For that purpose, the Flight Envelope function acquires the ground/flight conditions from the Landing Gear Control and Interface Units (LGCIUs), the slat/flap configuration from the Slat Flap Control Computers (SFCCs) and the engine on/off data from the Full Authority Digital Engine Control (FADEC) computers.

WEIGHT AND CG

The aircraft gross weight and Center of Gravity (CG) position data are computed in parallel by the Fuel Control and Monitoring Computers (FCMCs) and the Flight Envelope function itself. The Flight Envelope function ensures the selection of this data, which is then used by the Flight Envelope, Flight Guidance, Flight Management and the flight controls.
If at least one FCMC is valid, the Flight Envelope function uses the aircraft gross weight and the CG position from the FCMC. If both FCMCs are lost, the Flight Envelope function selects its own computations.

SPEED ENVELOPE COMPUTATION

The Flight Envelope function computes the speed envelope consisting of the characteristic speeds, these being the maneuvering speeds and speed limits. These speeds are used either by the crew or by the Flight Guidance automation to safely fly the aircraft within the speed envelope.
Note that most of these speeds are obtained from VS (stall speed) delivered by the FCPCs. The speeds are displayed on the speed scale of the EFIS PFDs.

ABNORMAL FLIGHT CONDITIONS DETECTION

The Flight Envelope function detects the presence of several abnormal flight conditions.

AFT CG

The two FCMCs control the aft CG by transferring fuel to and from the trim tank to reduce drag. The Flight Envelope function monitors aft CG limit overshoot by a computation fully independent of the FCMCs. In case of aft CG limit overshoot, a warning is generated. This computation is active in clean configuration over 20,000 feet.

LATERAL ASYMMETRY

The Flight Envelope function ensures the detection of lateral asymmetry by comparing the left and right engine thrusts. This condition is used for the Flight Envelope computations and Flight Guidance function.

WINDSHEAR

The Flight Envelope function computes a signal to provide a visual windshear warning on the PFDs and an audio warning through the

G7508471 - G7OT0T0 - FM22DB000000001

loudspeakers. Note that it has no authority on the autothrust and is only active if slats and flaps are extended.

G7508471 - G7OT0T0 - FM22DB000000001

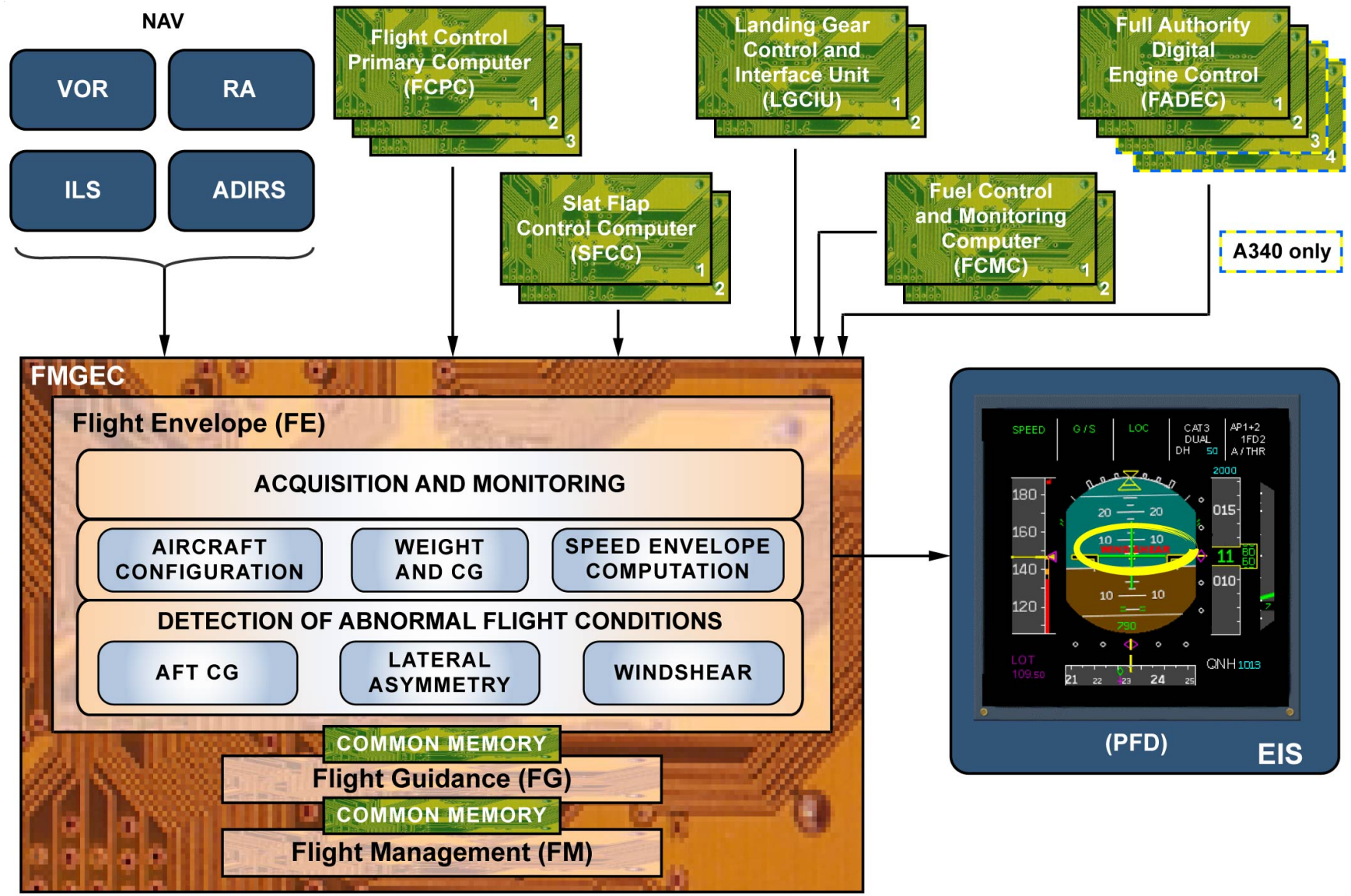

ACQUISITION AND MONITORING ... ABNORMAL FLIGHT CONDITIONS DETECTION

This Page Intentionally Left Blank

G7508471 - G7OT0T0 - FM22DB000000001

FLIGHT ENVELOPE PROTECTION D/O (3)

GENERAL

The Flight Envelope (FE) part detects A/C configurations outside the normal flight envelope such as windshear conditions and aft Center of Gravity (CG) out of tolerated limit. The FE part also acquires and transmits the alphafloor signal from the Flight Control Primary Computers (FCPCs) to the Flight Guidance (FG) part.
FE processing is autonomous. A single detection by one of the two Flight Management Guidance and Envelope Computers (FMGECs) is enough to activate one of these three functions.
The FE function computes the limit and manoeuvering speeds which are displayed on the speed scale of the PFD.

DETECTION AVAILABILITY

Windshear detection, aft CG detection or alphafloor detection depend on flight conditions. Windshear detection is available during 30 seconds after take-off under 250 feet Radio Altimeter (RA) and from 1300 feet RA to 50 feet RA in approach. It is inhibited in clean configuration.
Alphafloor acquisition is available from take-off to a radio altitude of 100 feet before landing.

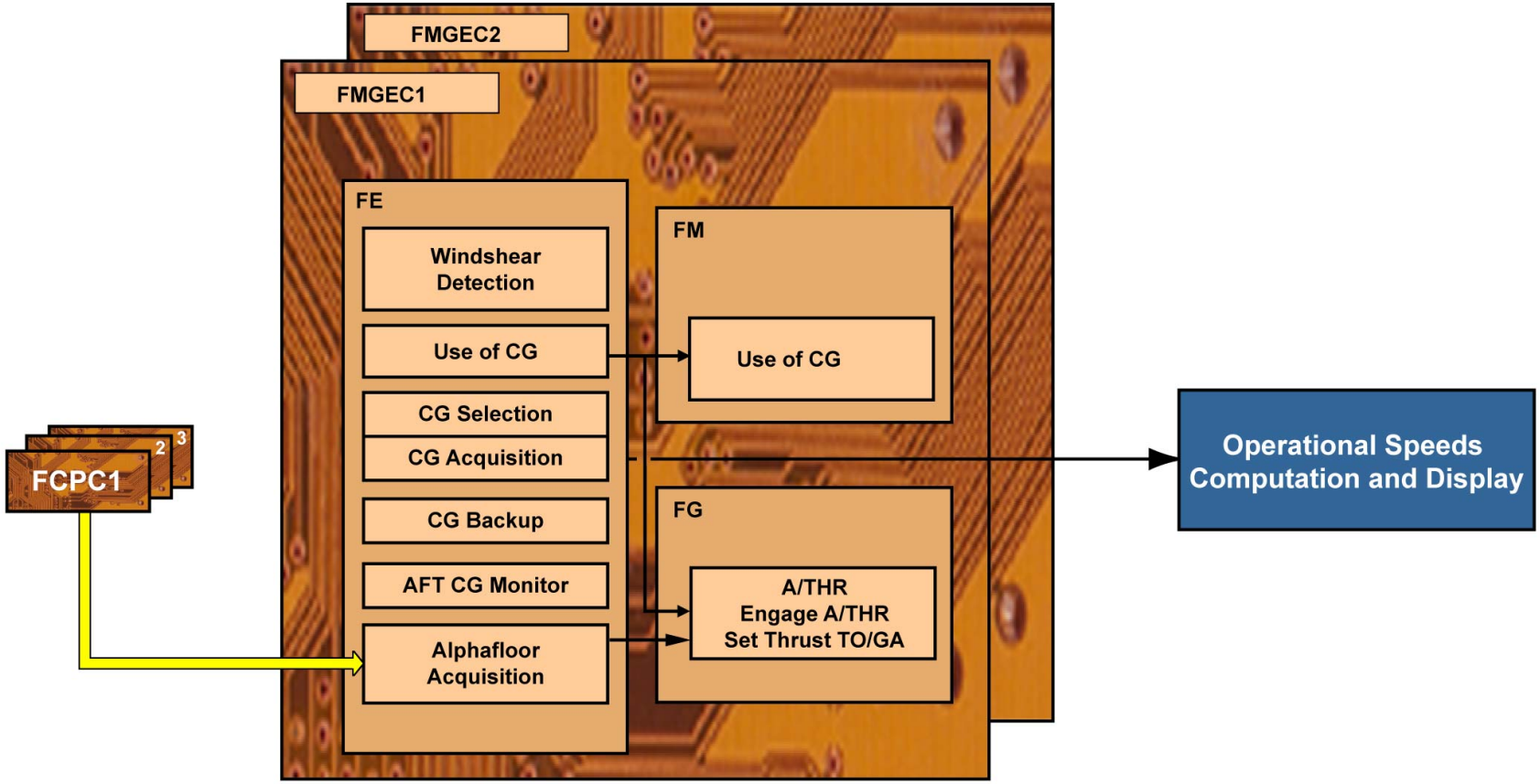

GENERAL & DETECTION AVAILABILITY

FLIGHT ENVELOPE PROTECTION D/O (3)

WINDSHEAR DETECTION

If windshear is detected, the FE function computes a windshear warning. A visual indication is given on the PFD and an aural warning can be heard from the cockpit loudspeakers. This signal computation is based on an algorithm taking into account longitudinal shears, vertical acceleration, wind components given by the Air Data and Inertial Reference Unit (ADIRU) and slat/flap position given by the Slat Flap Control Computer (SFCC).

WINDSHEAR WARNING

The warning is triggered depending on the shear intensity and a minimal safe A/C energy (according to speed and flight path).

NOTE: Note that if both RAs have failed, the windshear warning is not available. This warning loss is displayed on the ECAM status page.

G7508471 - G7OT0T0 - FM22D1000000002

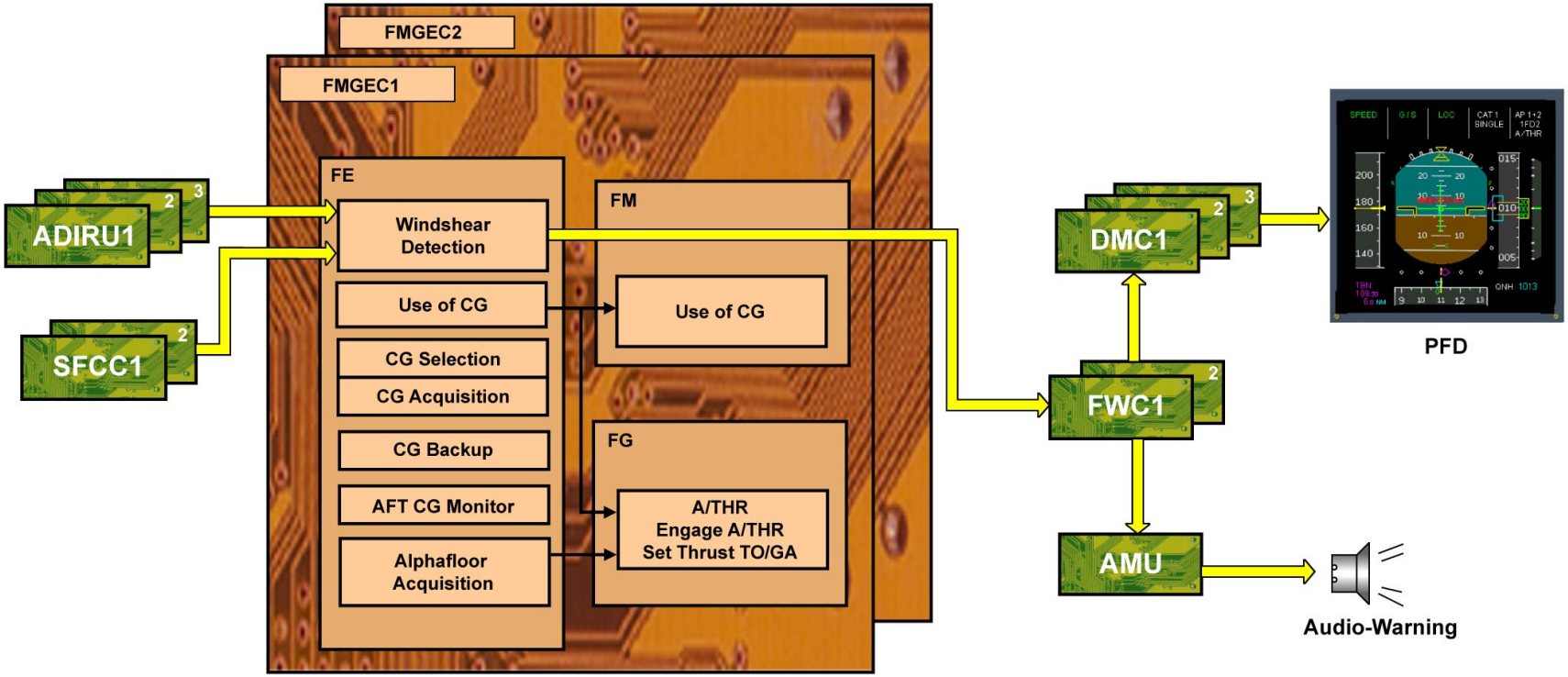

WINDSHEAR DETECTION - WINDSHEAR WARNING

FLIGHT ENVELOPE PROTECTION D/O (3)

AFT CENTER OF GRAVITY DETECTION

In order to improve A/C performance, the Fuel Control and Monitoring Computer (FCMC) controls the CG position by transferring fuel forward. The FE function monitors the non-overshoot of the aft CG limits by a computation fully independent of the FCMC.

AFT CG OVERSHOOT

If the FE GC is greater than the aft CG caution limit, the information is transmitted to the FCMC which stops fuel transfer during a time limit.

AFT CG WARNING

The FE function provides the Flight Warning Computers (FWCs) with a CG monitoring availability signal. If the CG is greater than the limit CG, the FE function sends an aft CG warning signal followed by an ECAM message to the FWCs.
Aft CG warning and caution are computed with CG and weight estimations made by the FE part, independently of the FCMC, mainly by using THS deflection.

G7508471 - G7OT0T0 - FM22D1000000002

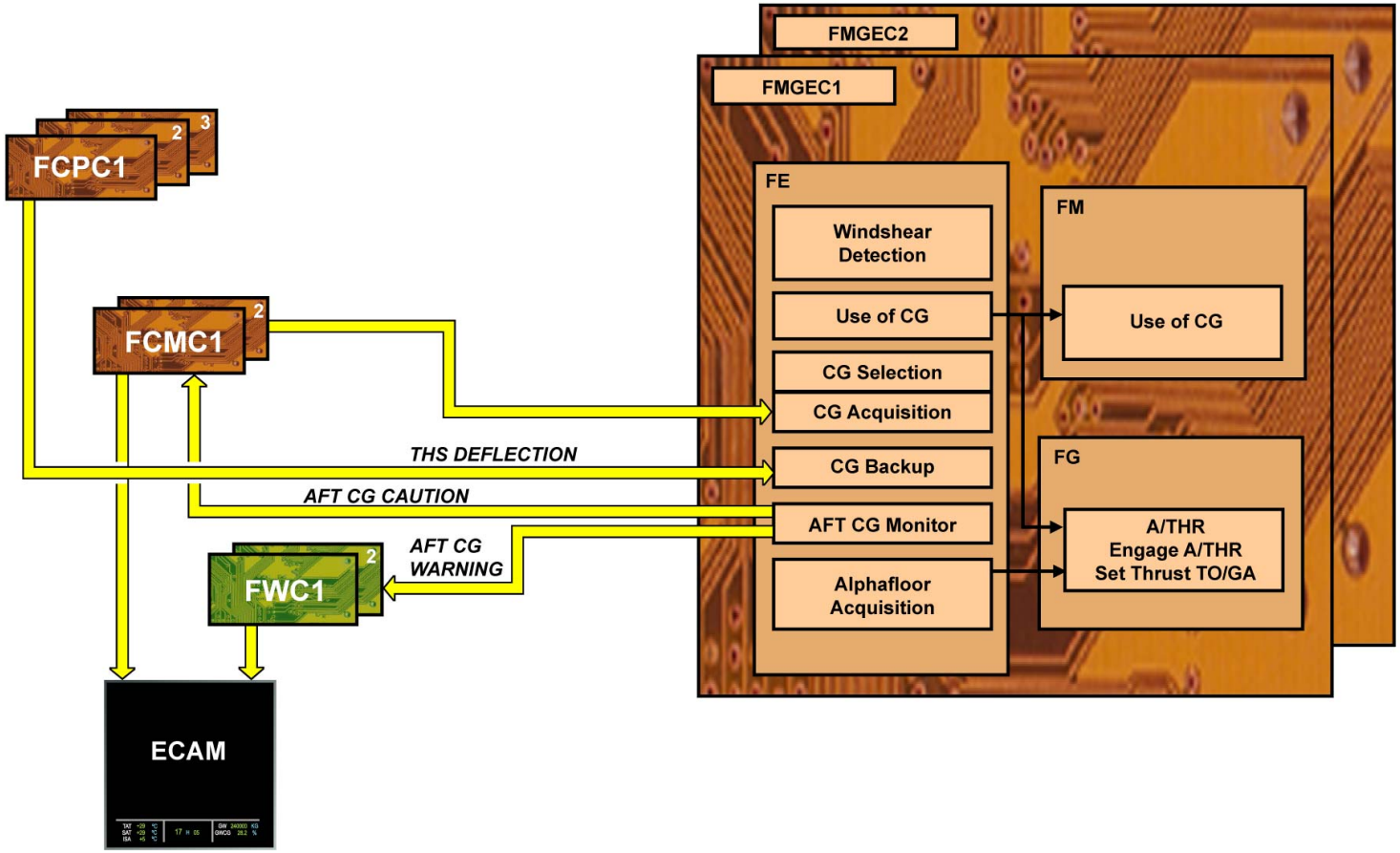

AFT CENTER OF GRAVITY DETECTION - AFT CG OVERSHOOT & AFT CG WARNING

FLIGHT ENVELOPE PROTECTION D/O (3)

ALPHAFLOOR ACQUISITION

The FE part only acquires the Alphafloor detection/activation signal coming from the FCPC. This creates the Alphafloor condition. The FE part is involved as a letter box between the FCPCs and the FG part. The alphafloor condition is used by the FG part and the opposite FMGEC.

ALPHAFLOOR PROTECTION OF THE AUTOTHRUST

The alphafloor protection of the autothrust function is active when the detection is performed by at least one of the three FCPCs. The Alphafloor acquisition function has full authority on the autothrust via the FG part. It forces the autothrust to Take-Off/Go-Around (TO/GA) thrust even if the autothrust was not previously engaged. The full thrust signal is sent to the engines via the Flight Control Unit (FCU), the Engine Interface and Vibration Monitoring Unit (EIVMU) and the Electronic Engine Controls (EECs).

ALPHAFLOOR WARNING MESSAGES

Warning messages are displayed on the PFD and on the EWD.
The FE function provides the Display Management Computers (DMCs) via the FCU with a Flight Mode Annunciator (FMA) amber message A. FLOOR in the autothrust zone and an EWD amber message A FLOOR at the top left of the screen.

G7508471 - G7OT0T0 - FM22D1000000002

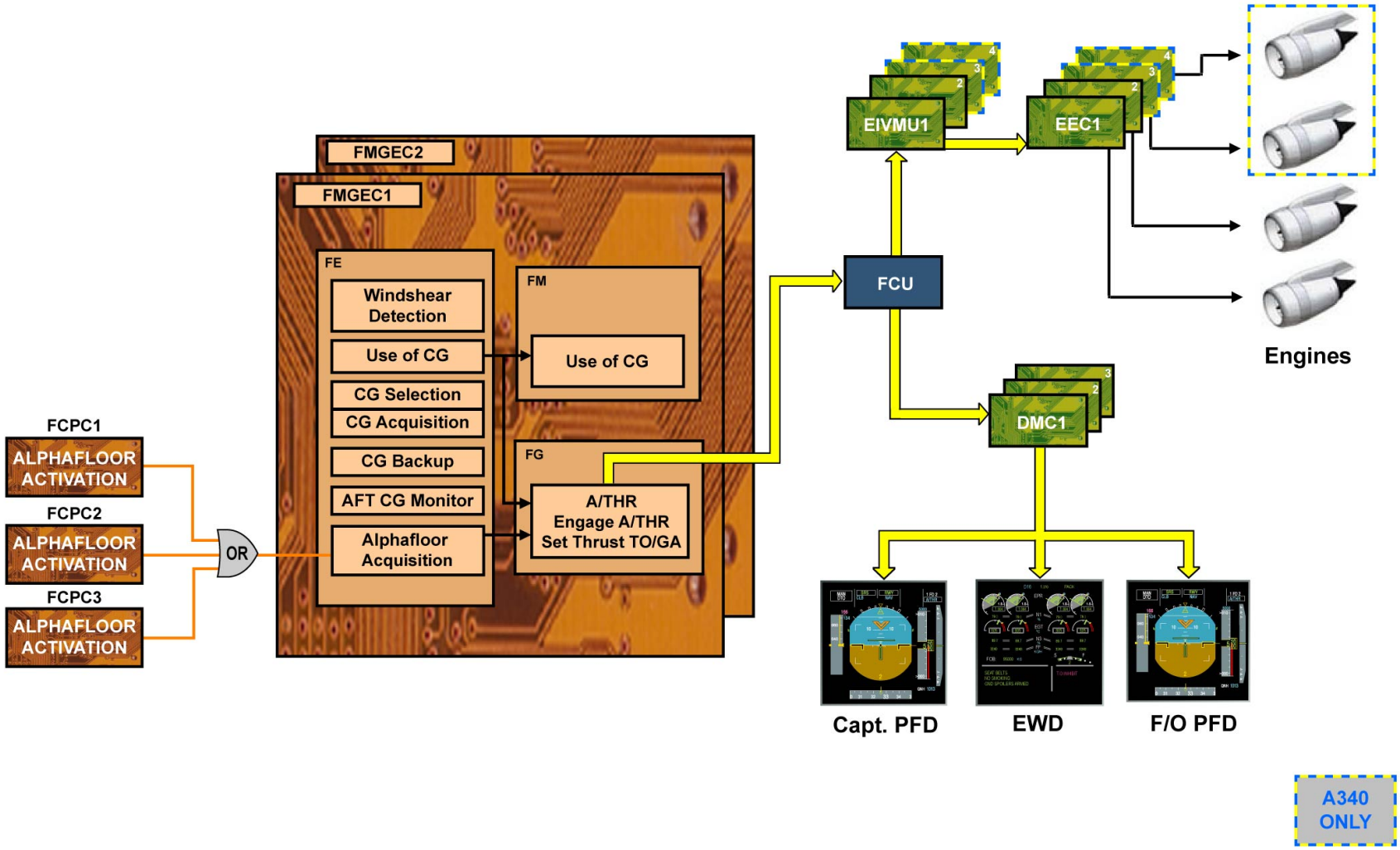

A340 ONLY

ALPHAFLOOR ACQUISITION - ALPHAFLOOR PROTECTION OF THE AUTOTHRUST & ALPHAFLOOR WARNING MESSAGES

FLIGHT ENVELOPE PROTECTION D/O (3)

OPERATIONAL SPEED COMPUTATION AND DISPLAY

Now the operational speeds will be explained.

F SPEED

F speed is the minimum flap retraction speed and corresponds to the speed at which flaps can be retracted.
F speed is available on the PFD one second after shock absorber extension and when the slat/flap lever is in positions 3 or 2. F speed is represented by a green F on the speed scale.

S SPEED

S speed is the minimum slat retraction speed: it corresponds to the speed at which slats can be retracted.
S speed is available on the PFD one second after shock absorber extension and when the slat/flap lever is in position 1. S speed is represented by a green "S" on the speed scale.

VLS

The Lowest Selectable Speed (VLS) is the minimum selectable speed for the actual slat and flap configuration taking into account the control lever position, the real surface position and the speedbrake configuration. The VLS provides a safety margin in order to avoid stalling at low speed and buffeting during cruise (throughout the FE). It is used by the Automatic Flight System (AFS) in order to prevent speed undershoot.
VLS is displayed one second after shock absorber extension and for all slat/flap configurations. It is represented by the top of an amber strip in the lower part of the speed scale.

VMAN GREEN DOT

The Manoeuvering Speed (VMAN) is a function of the weight, the altitude and the number of engines running. It is the optimum speed in the event of one engine failure. VMAN (manoeuvering speed or green dot) is limited by the maximal operational speed (VMAXOP) and the VLS. VMAN is available when the A/C is in flight and in clean configuration.
It is represented on the PFD by a green dot on the speed scale.

VMAXOP

VMAXOP is the maximum operational speed used as a limit in the FG part.

NOTE: Note that it is not represented on the PFD.
In clean configuration, the maximal operational speed corresponds to the buffeting limit at 0.2 g with respect to weight and altitude. It is limited by the maximal speed (VMAX) minus 5 kts and the VLS in clean configuration.
With flaps and slat extended, VMAXOP is limited by the maximum Flap Extended Speed (VFE) and VLS.

VMAX

VMAX speed is the maximum speed and it is used by the AFS in order to prevent excessive speed.
The maximum speed (VMAX) corresponds to the Maximum Operating Speed/Mach (VMO/MMO) in clean configuration and L/G retracted. In clean configuration but with L/G extended, VMAX corresponds to the Maximum Landing Gear Extended Speed (VLE). With slats and flaps extended, VMAX corresponds to the Maximum Flap Extended Speed (VFE).
It is defined on the PFD by the lower end of a red and black strip in the upper part of the speed scale.

VFEN

VFEN corresponds to the maximum flap and slat extension speed of the next slat/flap configuration. The predictive maximum flap extended speed at the next slat/flap position depends only on the slat/flap control lever position.

G7508471 - G7OT0T0 - FM22D1000000002

VFEN is displayed on the PFD below 14,625 ft except when flaps are fully extended and it is indicated by two amber dashes.

VCTREND

VCTREND represents the airspeed tendency, that means the A/C acceleration or deceleration. The airspeed tendency is computed to represent the speed that the A/C would have 10 seconds later if the acceleration remained constant.
VCTREND is displayed on the PFD if VC is higher than 30 kts and it is defined by a yellow pointer initiating an A/C actual speed symbol.

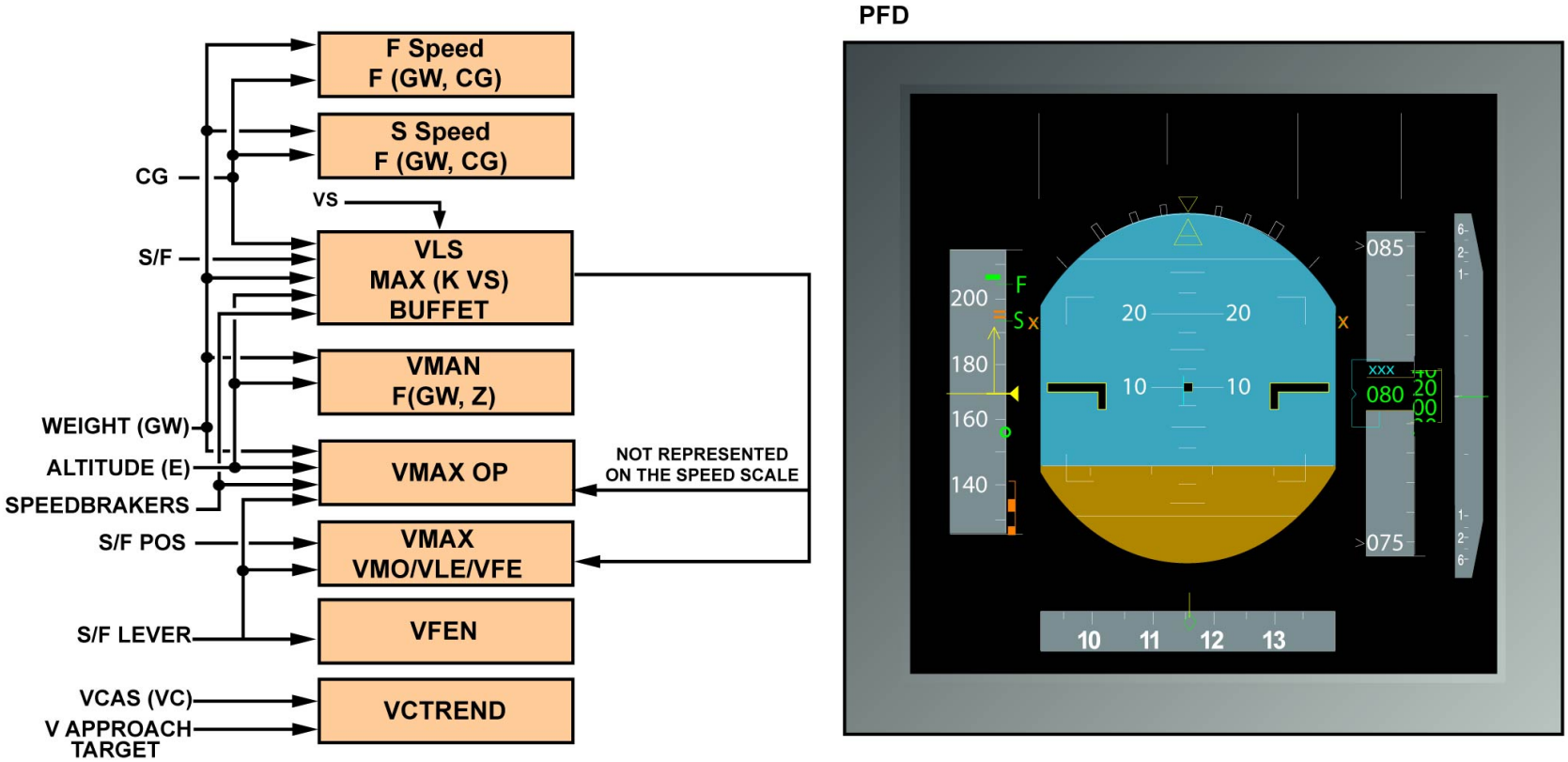

OPERATIONAL SPEED COMPUTATION AND DISPLAY - F SPEED ... VCTREND

G7508471 - G7OT0T0 - FM22D100000002

This Page Intentionally Left Blank

G7508471 - G7OT0T0 - FM22D1000000002

FLIGHT GUIDANCE GENERAL DESCRIPTION (3)

GENERAL

The Flight Guidance (FG) functional portion of the Flight Management Envelope and Guidance Computers (FMGECs) performs three functions:
- Autopilot (AP),
- Flight Director (FD),
- Autothrust (A/THR).

The FG part contains the engagement logics, the operational mode logics and the control laws associated to these functions. The control laws provide AP guidance orders, FD orders and a thrust command to stabilize and to guide the aircraft.
Note that, because there are no longer any autopilot actuators, there are no power loops inside the FG.

G7508471 - G7OT0T0 - FM22DC000000001

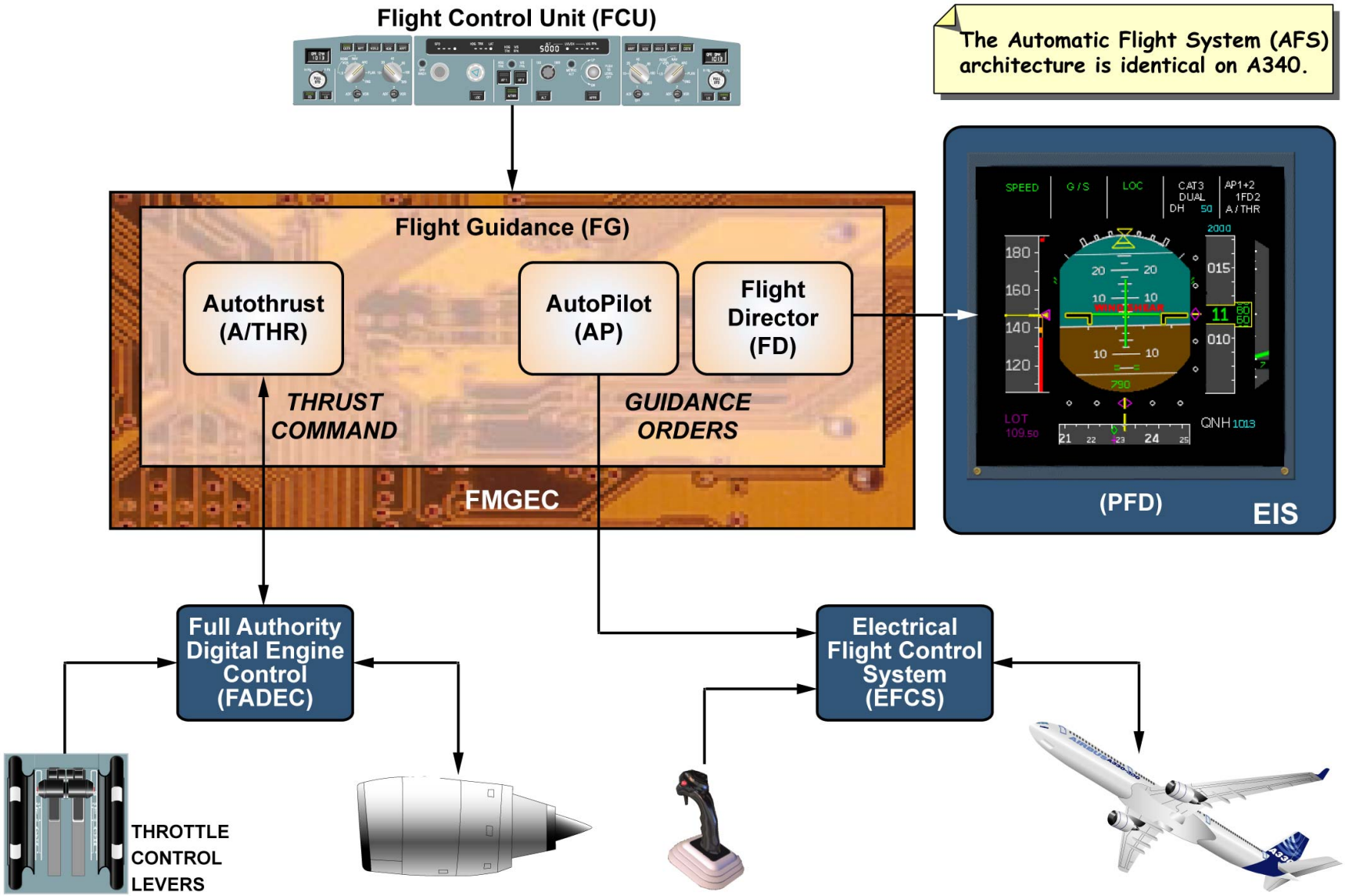
Flight Control Unit (FCU)
The Automatic Flight System (AFS) architecture is identical on A340.
Flight Guidance (FG)
Autothrust (A/THR)
AutoPilot (AP)
Flight Director (FD)
THRUST COMMAND
GUIDANCE ORDERS
FMGEC
(PFD)
EIS
Full Authority Digital Engine Control (FADEC)
Electrical Flight Control System (EFCS)
THROTTLE CONTROL LEVERS

GENERAL

FLIGHT GUIDANCE GENERAL DESCRIPTION (3)

AUTOPILOT FUNCTION

The autopilot function computes lateral and longitudinal guidance orders used by the Flight Control Primary Computers (FCPCs) for automatic deflection of the flight control surfaces as well as for nose wheel steering through the Braking/Steering Control Unit (BSCU). The autopilot functions are:
- acquisition and holding of a flight path and stabilization of the aircraft around its Center of Gravity (CG),
- acquisition and holding of a flight level,
- acquisition and holding of a speed,
- automatic landing including roll-out,
- go around.

FLIGHT DIRECTOR FUNCTION

When the autopilot is not engaged, the Flight Director (FD) function displays guidance orders to the pilot to apply on the controls to follow the optimum flight path which would be ordered by the autopilot if it was engaged. The FD guidance orders are displayed on the center section of the EFIS PFDs:
- generally pitch and roll orders,
- a yaw order during take-off and landing.

When the autopilot is engaged, the FD function displays the autopilot orders.

AUTOTHRUST FUNCTION

The autothrust (A/THR) function sends a computed thrust command (thrust target) to the Full Authority Digital Engine Control (FADEC) for automatic engine control. The A/THR functions are:
- acquisition and holding of a speed or a mach number,
- acquisition and holding of a thrust,
- reduction of the thrust to idle during descent and during flare in final approach,
- protection against excessive angle-of-attack (called alphafloor protection) by ordering a maximum thrust when an alphafloor detection signal is received from the Flight Envelope (FE) functional part.

G7508471 - G7OT0T0 - FM22DC000000001

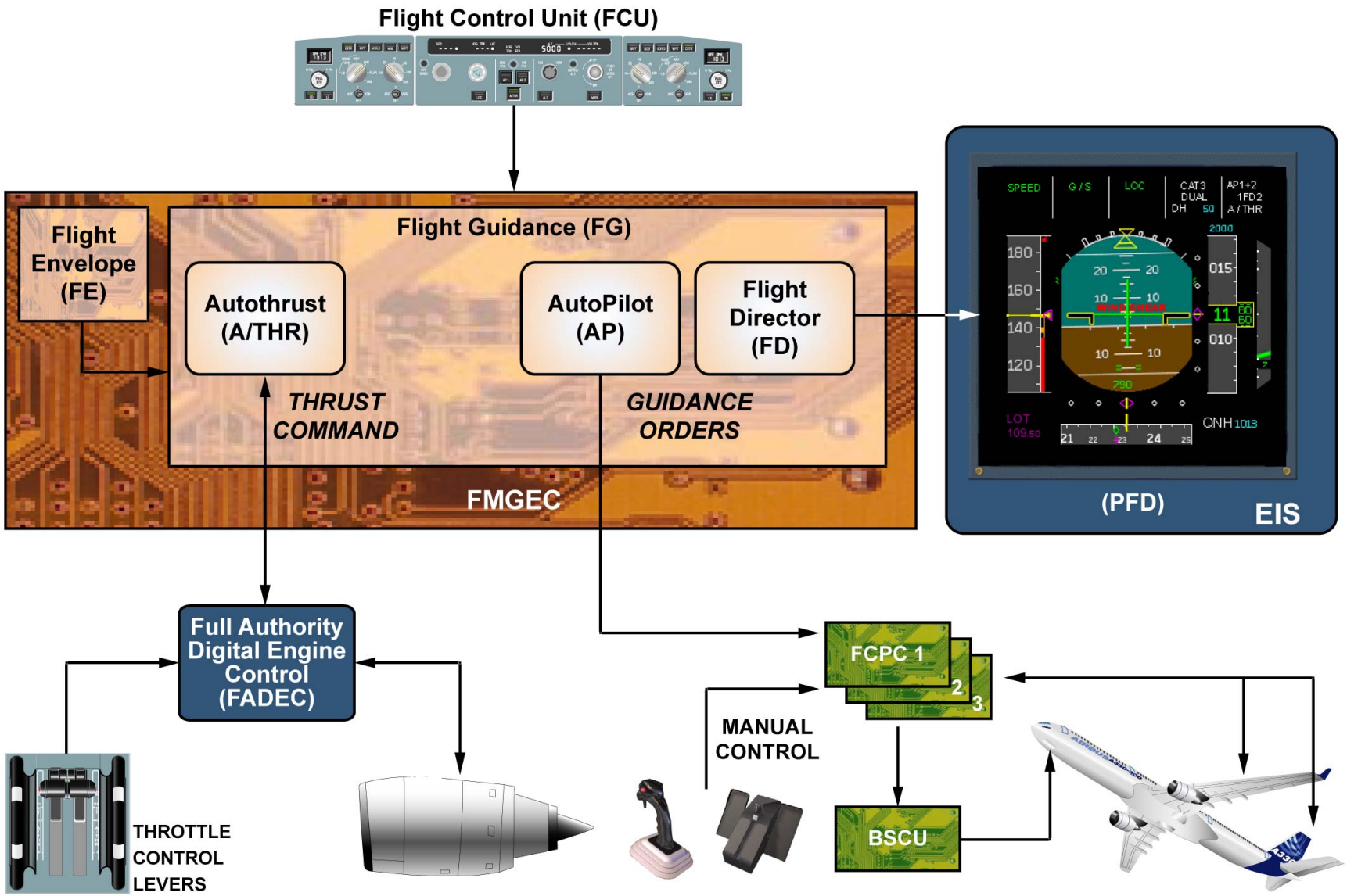

AUTOPILOT FUNCTION ... AUTOTHRUST FUNCTION

FLIGHT GUIDANCE GENERAL DESCRIPTION (3)

FLIGHT DIRECTOR ENGAGEMENT

The FD is automatically engaged at FMGEC power-up and the 2 dedicated FCU P/Bs are lit. However, the FD guidance orders will be displayed on the PFDs from take-off only. Then, they can be displayed or not by using the same FCU P/Bs. The FD engagement status is displayed on the FMA.
The following AP/FD common conditions must be satisfied to allow engagement:
- the FMGEC must receive data from at least two valid Air Data and Inertial Reference Units (ADIRU). When two ADIRUs are lost, the Inertial Reference/Air Data Reference (IR/ADR) condition disengages the AP/FD,
- the FCU must always be seen valid by the FMGEC except in land track or Go Around modes,
- each FMGEC monitors the validity of the Radio Altimeter (RA). One of the RA must be valid during the approach phase. The condition is inhibited in roll out mode to reduce the risk of AP loss in this phase,
- each FMGEC monitors the parameters transmitted by both ILS receivers,
- the roll-out mode must be valid,
-the lateral and longitudinal flight plans must be valid as soon as the final descent mode is armed. If final descent mode is not armed, the loss of lateral or longitudinal flight plans leads to reversion in HDG and V/S modes (AP remains engaged).
- the AP/FD/A/THR common condition is needed.

G7508471 - G7OT0T0 - FM22DC000000001

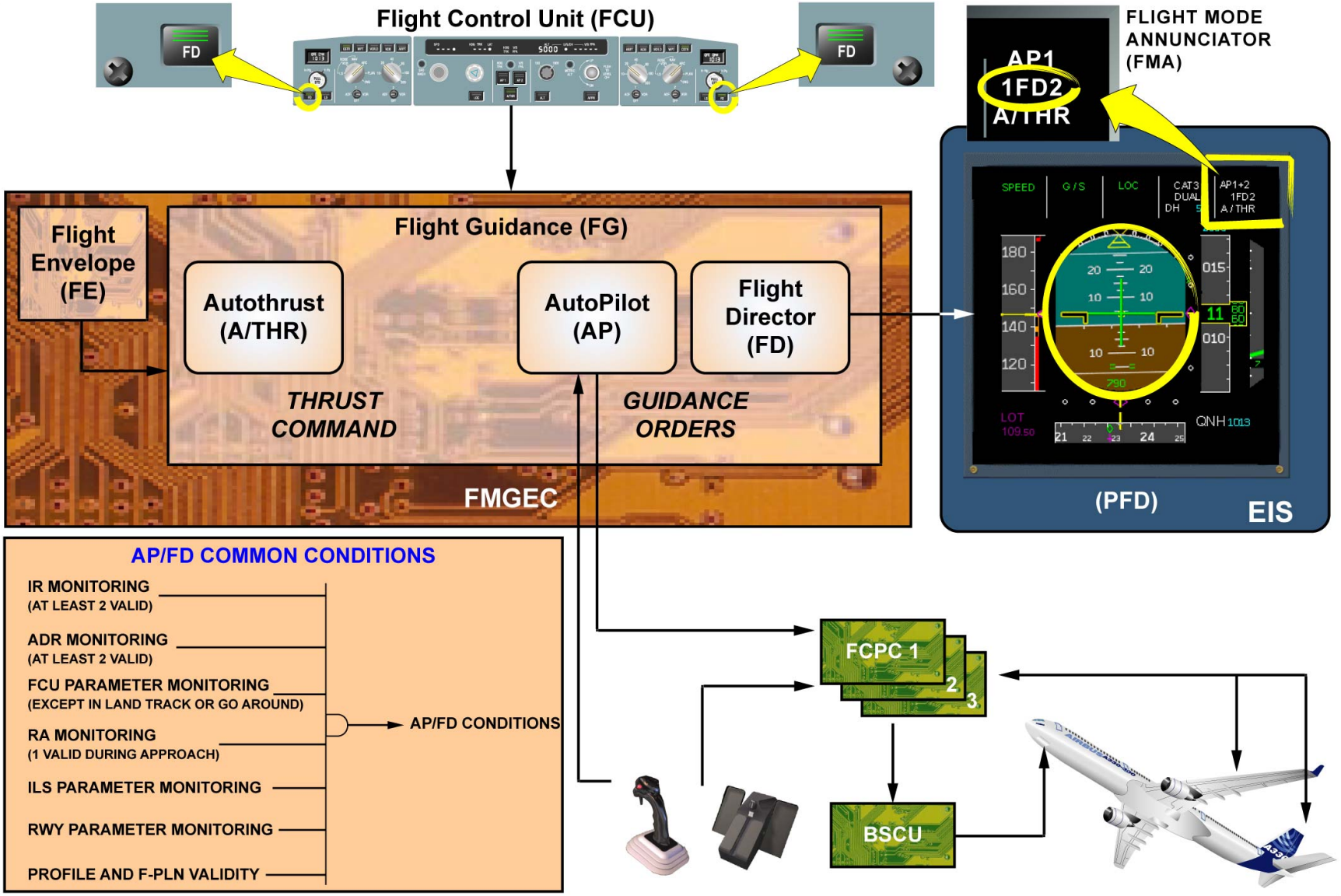

FLIGHT DIRECTOR ENGAGEMENT

FLIGHT GUIDANCE GENERAL DESCRIPTION (3)

AUTOPILOT ENGAGEMENT

Autopilot engagement is always done manually through 2 dedicated Flight Control Unit (FCU) P/Bs. Only one autopilot can normally be engaged at a time. Dual autopilot engagement is possible, but in approach and go around phases (to maximize the autopilot availability during automatic landing). When the autopilot is engaged:
- the associated FCU AP P/B is lit,
- the engagement status is displayed on the Flight Mode Annunciator (FMA) of the PFDs,
- the side sticks are locked and the rudder pedals feel force threshold is increased.

Autopilot disengagement can be done manually or automatically.
Manually, at any time on ground or in flight:
- either through the associated FCU P/B (AP engagement feedback),
- or through the side sticks by an unlocking action or by pressing the take-over priority P/BSWs,
- or through the rudder pedals.

Automatically, in case of failure detection or protection activation (for example, overspeed protection).
To engage or disengage the AP, the following specific conditions must be covered:
- the AP engagement is confirmed by the feedback of four AP ENGD discretes generated by each FMGEC,
- disengagement through the AP takeover and priority P/BSWs,
- each FMGEC command and monitoring channel receives engagement enable discretes from the FCPC command and monitoring channels,
- condition specific to Go Around and roll out mode. On the ground, the AP disengages when the Go Around mode is engaged or when the throttle control levers are positioned above the Maximum Continuous Thrust (MCT) position. At the end of the roll out mode, on ground, if both APs are engaged, the AP2 disengages.

On top of the above, the AP/FD common conditions and the AP/FD/A/THR conditions must be fulfilled too. The AP engagement has also operational limitations:
- aircraft speed must be within Lower Selectable Speed (VLS) and Vmax,
- aircraft pitch angle does not exceed 10 degrees nose down or 22 degrees nose up,
- bank angle is less than 40 degrees.

G7508471 - G7OT0T0 - FM22DC000000001

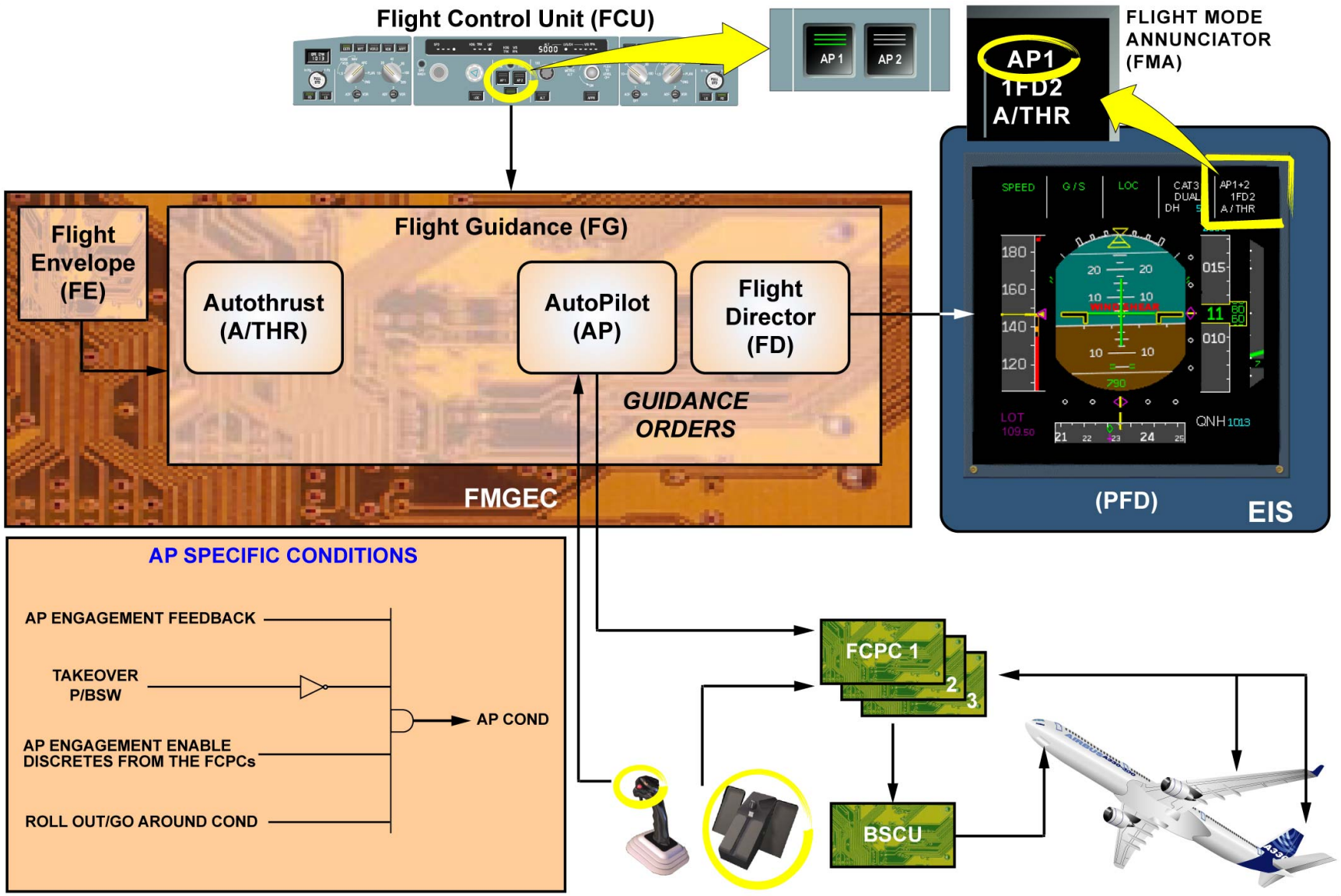

AUTOPILOT ENGAGEMENT

G7508471 - G7OT0T0 - FM22DC000000001

FLIGHT GUIDANCE GENERAL DESCRIPTION (3)

AUTOTHRUST ENGAGEMENT

The autothrust engagement is done either automatically or manually:
- automatically when in take-off or go around phases, or when alpha floor protection is activated,
- manually through a dedicated FCU P/B.

When autothrust is engaged:
- the FCU A/THR pushbutton is lit,
- the engagement status is displayed on the FMA.

When engaged, the autothrust can be active or not depending on the position of the thrust levers. When engaged and not active, the thrust control is manual. The thrust is commanded according to the position of the thrust levers. When engaged and active, the thrust control is automatic, and the thrust is commanded according to the autothrust computed thrust target.

A/THR disengagement can be done manually:
- by pressing the autothrust instinctive disconnect switch on any thrust lever,
- by setting all thrust levers to idle position,
- through the dedicated FCU pushbutton.

The A/THR is disengaged automatically in case of failure detection.

The A/THR function can be engaged according to the following the AP, FD and A/THR common conditions and some specific conditions. The common condition are the following:
- the power must be supplied to the FMGEC for more than 3 seconds,
- the FM part must be valid to engage the cruise modes, but is not used for G/S TRACK below 700 ft, LAND TRACK and Go Around,
- if the two FM parts of the FMGEC 1 and 2 are lost, the AP/FD can be engaged only by using selected modes.

The specific conditions are the following:
- at least 2 ADIRUs valid except in alpha floor condition,
- two Engine Interface and Vibration Monitoring Units (EIVMU) must be healthy if both engine are running on A330 aircraft (one otherwise),
- three EIVMUs must be healthy on A340 aircraft,
- four Engine Electronic Controllers (EEC) / Electronic Control Unit (ECU) must be healthy.

G7508471 - G7OT0T0 - FM22DC000000001

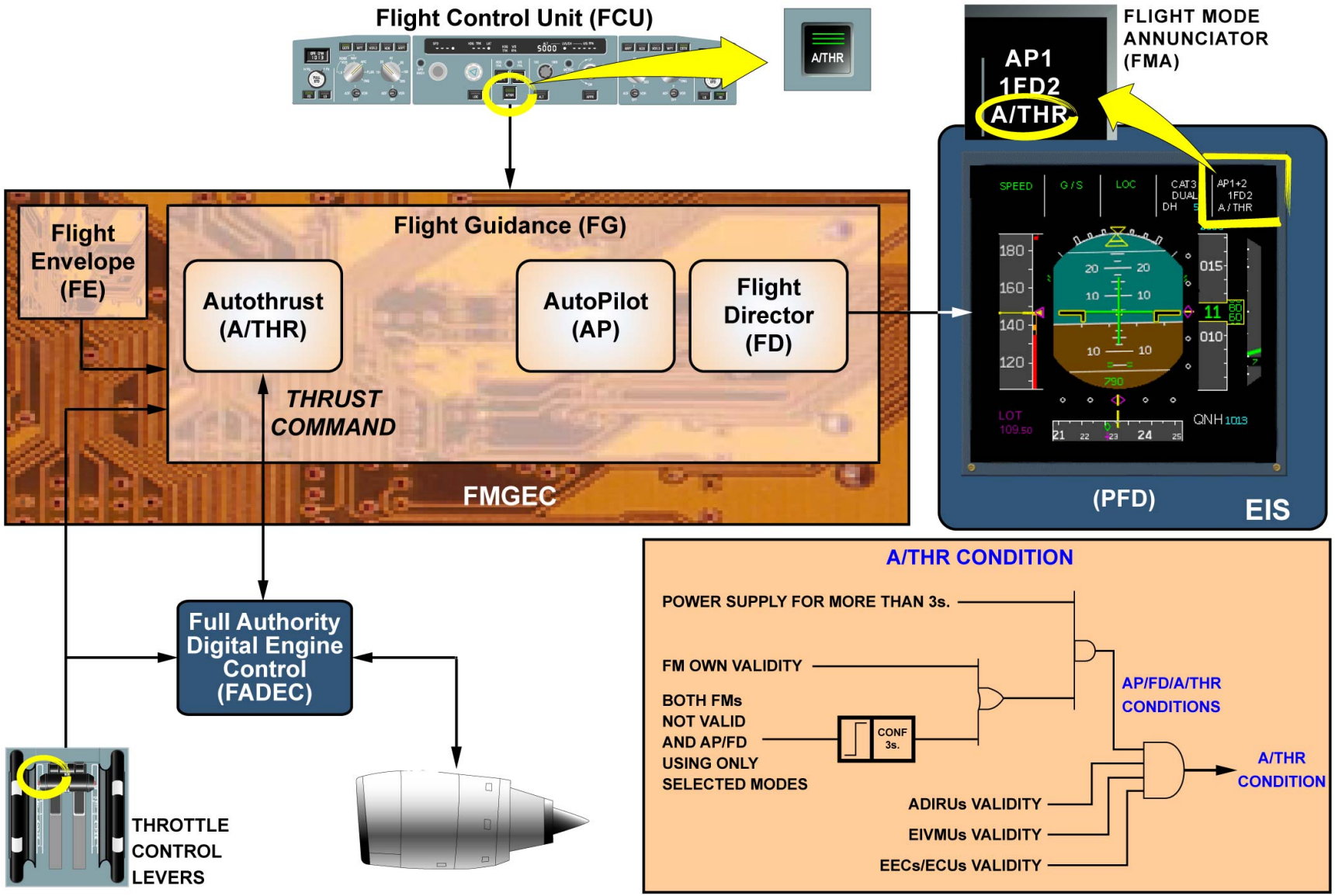

AUTOTHRUST ENGAGEMENT

G7508471 - G7OT0T0 - FM22DC000000001

FLIGHT GUIDANCE GENERAL DESCRIPTION (3)

SPEED CONTROL

In flight, the speed is a safety parameter used as a reference for the longitudinal guidance. As a consequence, the FG functional part continuously controls the Speed/Mach parameter either by the AP/FD longitudinal guidance or the autothrust. The reference speed is always limited by the FE characteristic speeds computation. It is displayed on the speed scale of the PFDs.
The speed reference is computed by the FM functional part by pushing the FCU knob in, this is called "managed speed". If the speed reference comes from the FCU, by pulling the corresponding knob out, it is called "selected speed".

G7508471 - G7OT0T0 - FM22DC000000001

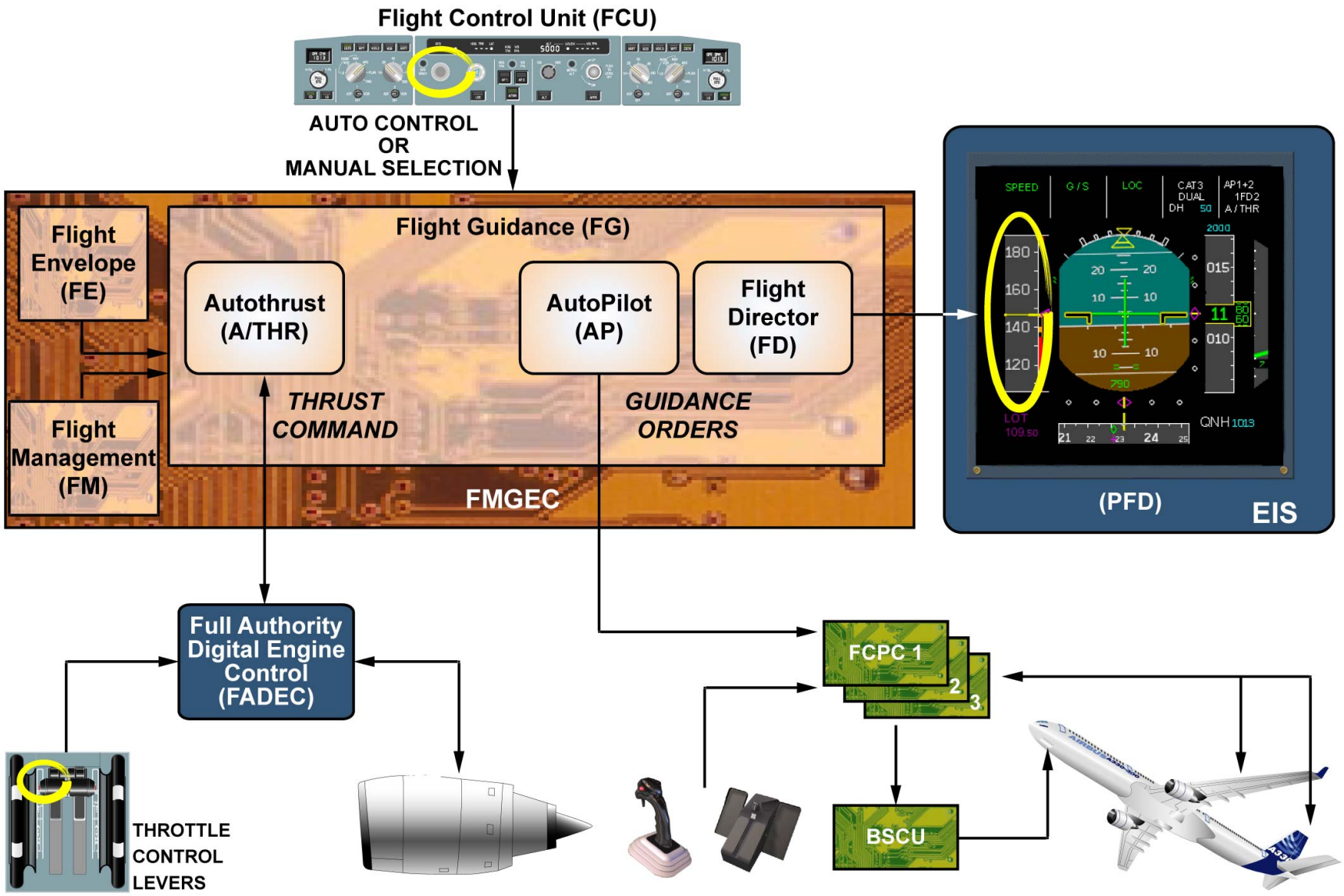

SPEED CONTROL

G7508471 - G7OT0T0 - FM22DC000000001

FLIGHT GUIDANCE GENERAL DESCRIPTION (3)

LANDING CAPABILITY COMPUTATION

Each FMGEC computes the landing capability (CAT1 / CAT2 / CAT3 / SINGLE/CAT3 DUAL) during the whole flight:
- when the AP and FD are disengaged for one FMGEC, the landing capability corresponds to the category of the available FMGEC.
- when AP and FD are engaged for both FMGECs, the landing capability corresponds to the lowest category sent by the FMGECs.

The computation depends on Auto Flight System (AFS) and peripheral systems availability. The validity of the different systems used depends on the AFS components, the ADIRUs (ADR and IR parts), the Flight Warning Computers (FWC), the BSCU, the Electrical Flight Control System (EFCS), the RA, the ILS and the PFD. Some other conditions are also used (power supply splitting, etc). The landing capability availability is displayed on the ECAM STATUS page and, when in approach, on the fourth column of the FMA. Depending on the availability of peripherals, the landing capability can be downgraded. A triple click aural warning is generated if landing capability is downgraded.

G7508471 - G7OT0T0 - FM22DC000000001

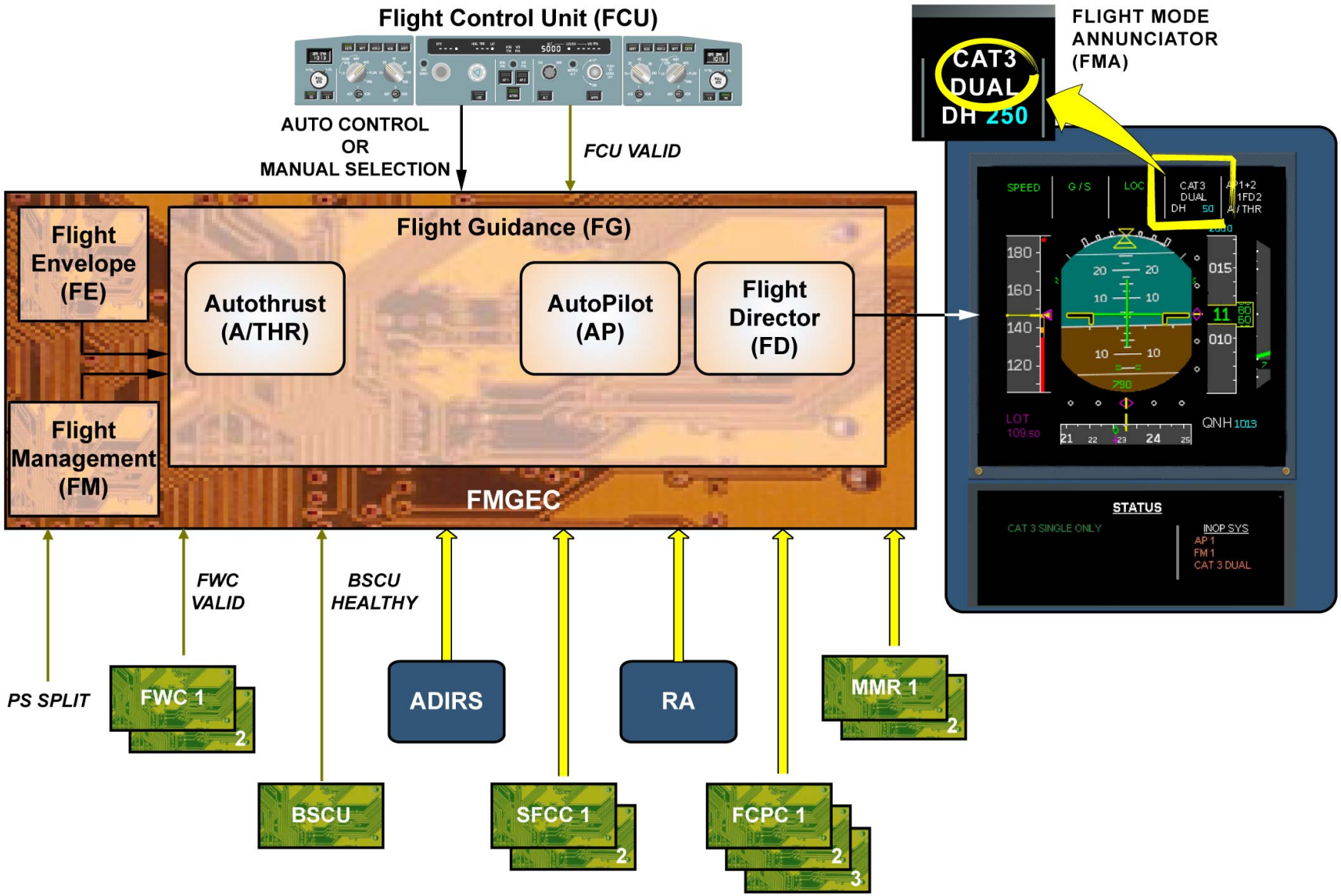

LANDING CAPABILITY COMPUTATION

G7508471 - G7OT0T0 - FM22DC000000001

FLIGHT GUIDANCE AUTOTHRUST D/O (3)

ENGAGEMENT

MANUAL ENGAGEMENT

The engagement of the autothrust function can be manual or automatic. The autothrust is engaged manually by pressing the A/THR P/B on the Flight Control Unit (FCU). This is inhibited below 100 feet Radio Altimeter (RA), with engines running.

NOTE: Note that to effectively have autothrust on engines, the engagement of the autothrust is confirmed by a logic of activation in the Engine Electronic Controller (EEC) for Pratt & Whitney and Rolls Royce Engines and in the Engine Control Unit (ECU) for General Electrics (GE) engines.

AUTOMATIC ENGAGEMENT

The autothrust is engaged automatically:
- when the Autopilot/Flight Director (AP/FD) modes are engaged at take-off or go-around,
- in flight, when the alphafloor (protection against high angle-of-attack) is activated; this is inhibited below 100 feet RA except during the 15 seconds following the lift-off.

A/THR CONDITIONS

The A/THR engagement is effective only when all the necessary conditions are met and if a request for engagement (pilot action or automatic) is present. Two conditions are required to make the engagement possible:
- AP/FD/A/THR common conditions,
- A/THR specific conditions.

The AP/FD/A/THR common conditions are the following:
- power must be supplied to the Flight Management Guidance and Envelope Computer (FMGEC) for more than 3 seconds,
- the Flight Management (FM) functional part of the FMGEC must be valid to engage the cruise mode. If the two FM functional part of the FMGECs 1 and 2 are lost, the AP/FD can be engaged only by using selected modes.

The conditions specific to the A/THR system includes the following conditions:
- the Flight Guidance and Envelope (FGE) functional parts must receive two valid Air Data/Inertial Reference Units (ADIRU),
- two Engine Interface and Vibration Monitoring Units (EIVMU) must be healthy,
- two EECs / ECUs must be healthy,
- the FCU must be healthy,
- no action on one of the A/THR instinctive disconnect P/BSW lasts more than 15 s, otherwise the A/THR engagement becomes impossible until the next FMGEC and EEC/ECU reset.

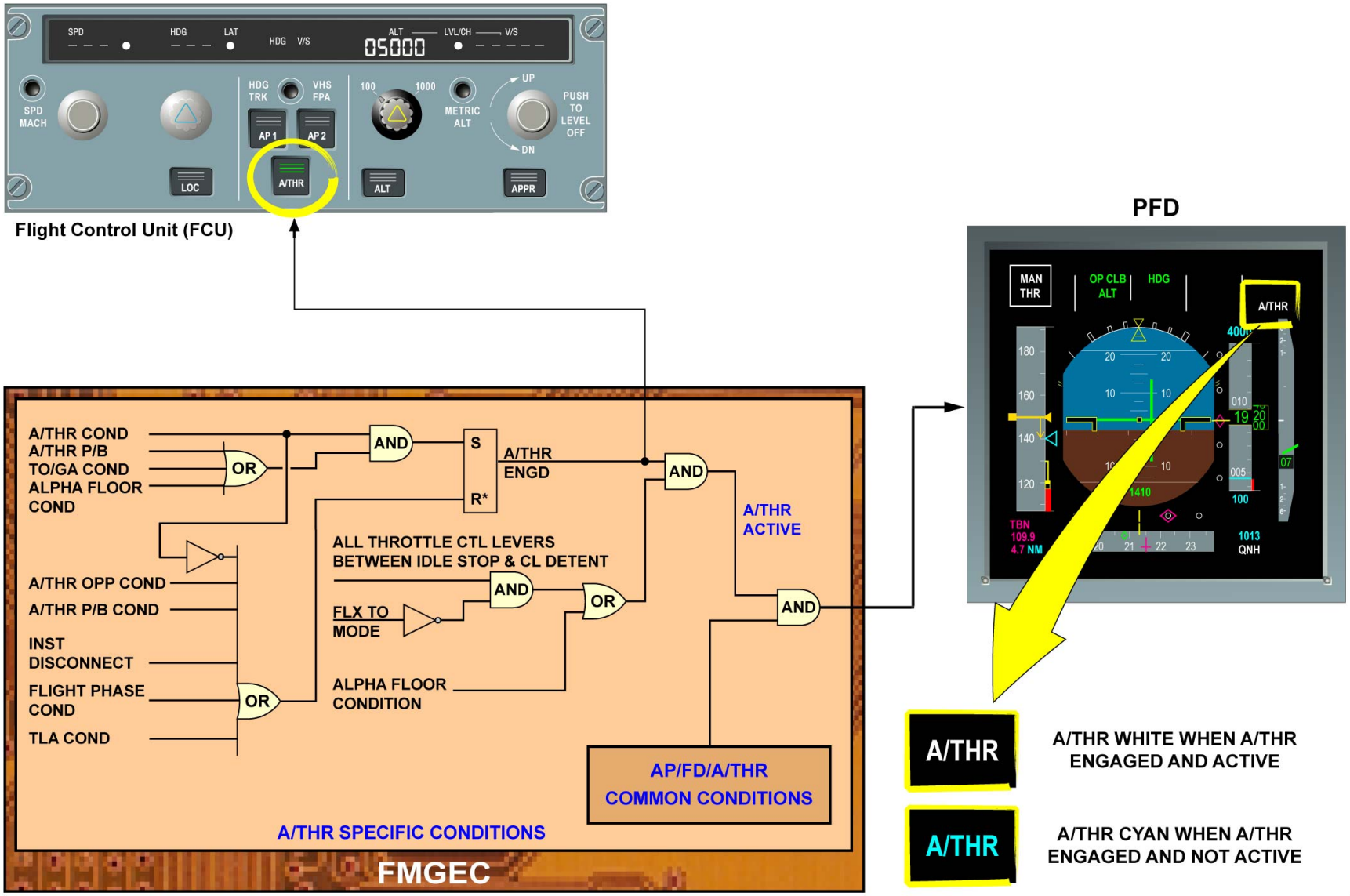

ENGAGEMENT - MANUAL ENGAGEMENT ... A/THR CONDITIONS

G7508471 - G7OT0T0 - FM22D3F22GK0103

FLIGHT GUIDANCE AUTOTHRUST D/O (3)

THRUST LEVERS

The thrust levers are manually operated and electrically connected to the EECs/ECUs. Each lever has 4 positions, defined by detents or stops, and 3 operating segments. The EECs/ECUs compute the thrust limit, which depends on the position of the thrust levers. The A/THR can be active only between IDLE and CLB if all engines are operative and between IDLE and FLX/MCT with one engine INOP.

NOTE: Note: The thrust levers never move automatically.
The thrust levers can be moved on a sector, which includes specific positions:
- 0: corresponds to an idle thrust,
- CL: corresponds to the maximum climb thrust or derated climb thrust,
- FLX/MCT / DTO: corresponds to a Flexible Take-Off Thrust or a Maximum Continuous Thrust or Derated Take-Off thrust,
- TO/GA: corresponds to a maximum Take-Off (Go-Around) thrust.
The Thrust Reverser (T/R) levers only allow reverse thrust to operate.)..
If a thrust lever is in a detent, the thrust limit agrees with this detent. If a thrust lever is not in a detent, the thrust limit agrees with the next higher detent. The FMGECs select the higher of the EEC/ECU 1 and EEC/ECU 2 thrust limits.

G7508471 - G7OT0T0 - FM22D3F22GK0103

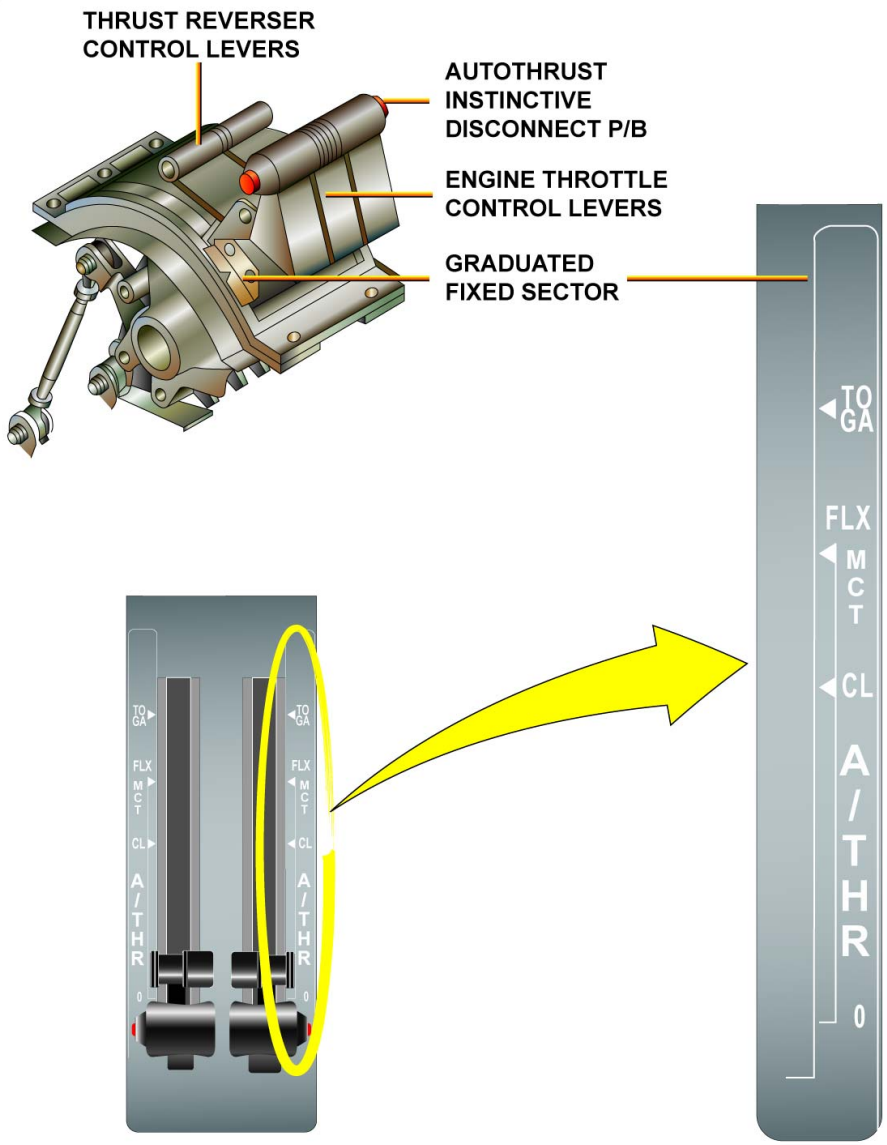

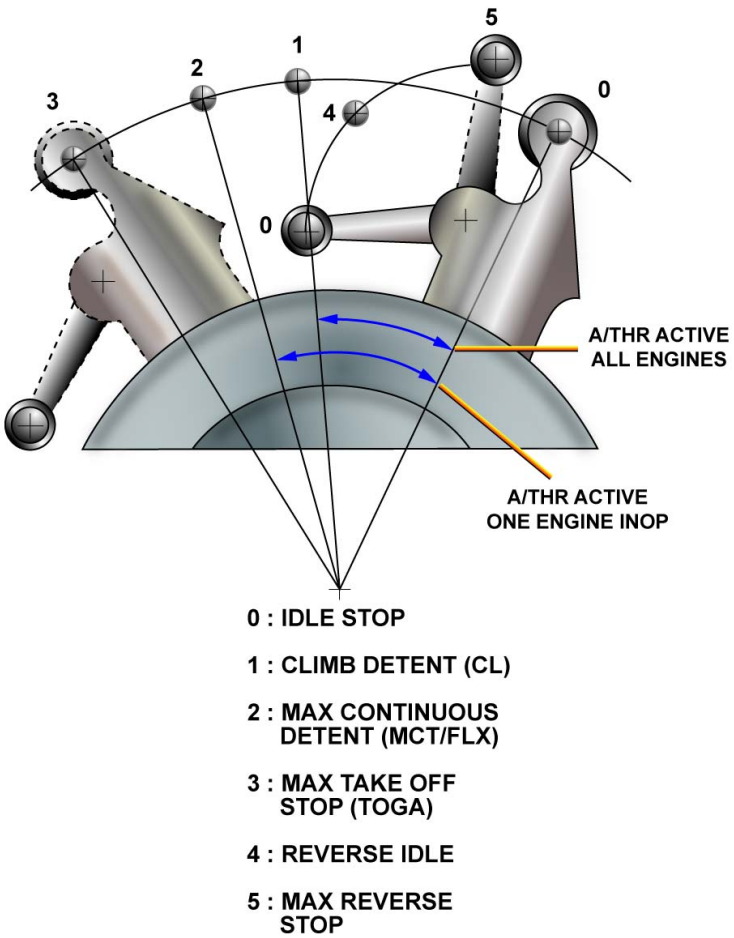

THRUST LEVERS

G7508471 - G7OT0T0 - FM22D3F22GK0103

FLIGHT GUIDANCE AUTOTHRUST D/O (3)

A/THR LOOP PRINCIPLE

To apply the autothrust function, the master FMGEC communicates with the Full Authority Digital Engine Control (FADEC) via the FCU and the EIVMUs.

A/THR FUNCTION LOGIC

The autothrust function can be engaged or disengaged. When it is engaged, it can be active or not active.

A/THR FUNCTION DISENGAGED

When the autothrust function is disengaged:
- the thrust levers control the engines,
- on the FCU, the A/THR P/B light is OFF,
- the Flight Mode Annunciator (FMA) does not display the autothrust engagement status nor the autothrust modes.

A/THR FUNCTION ENGAGED

When the autothrust engagement logic conditions are present, the autothrust can be engaged. It is active or not active depending on the thrust lever position.
Autothrust is active if:
- at least, one thrust lever is between CL detent (included) and 0 stop (included) and, at the most, one thrust lever is between the MCT detent and CL detent, and if there is no engine in FLEX TO mode,
- the alphafloor protection is active.

When the autothrust function is engaged and active:
- the autothrust system controls the engines,
- on the FCU, the A/THR P/B light is ON,
- the FMA displays the autothrust engagement status (in white in the right column) and the autothrust mode in the left column.

A/THR is not active if:
- at least, one thrust lever is above the MCT detent or, all the thrust levers are above the CL detent or, at least one engine is in FLEX TO mode,
- the alphafloor protection is not active.

When the autothrust function is engaged and not active:
- the thrust levers control the engines (as long as a thrust lever is outside the autothrust active area),
- the A/THR P/B light is ON,
- the FMA displays the autothrust engagement status (in cyan in the right column) and the thrust setting in the left column.

NOTE: In case of engine failure, the A/THR activation zones become between the MCT and 0 stops.

G7508471 - G7OT0T0 - FM22D3F22GK0103

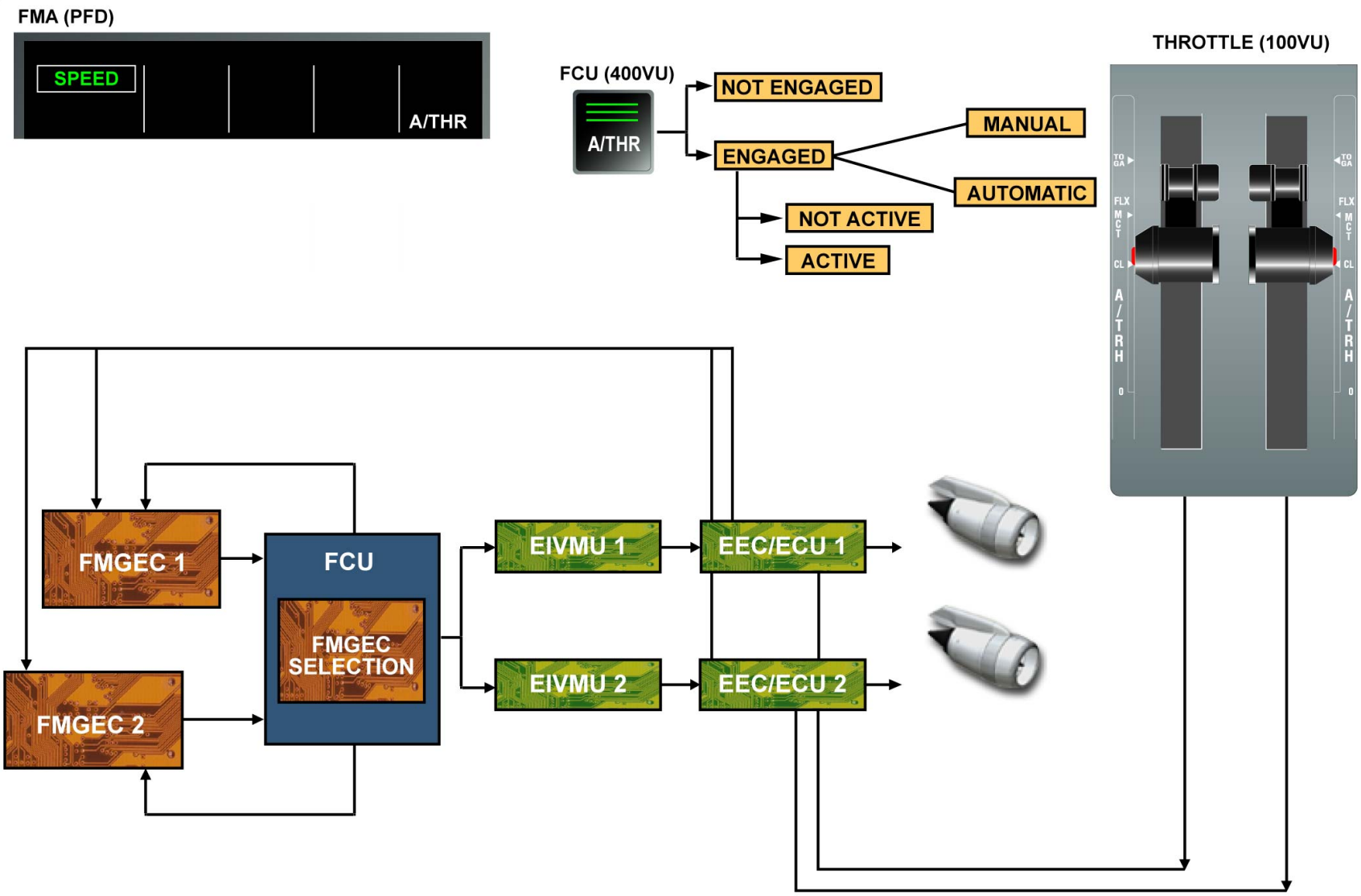

A/THR LOOP PRINCIPLE & A/THR FUNCTION LOGIC

G7508471 - G7OT0T0 - FM22D3F22GK0103

FLIGHT GUIDANCE AUTOTHRUST D/O (3)

MODES

The autothrust function works according to modes and their related reference parameters. The reference parameters can be:
- a SPEED or a MACH NUMBER: in this case, the source is either the FCU (value chosen by the pilots) or the FMGEC itself.
- a THRUST; in that case, the sources are either the EECs / ECUs (which compute the thrust limit) when the thrust limit is needed, or the FMGEC itself.

The possible autothrust modes are SPEED, MACH, THRUST, RETARD and alphafloor protection.

MODES DESCRIPTION

The choice of the mode is made by the FMGECs according to the AP/FD current longitudinal active mode:
- SPEED or MACH mode, the reference of which is selected on the FCU or managed by the FMGEC,
- THRUST mode, where the reference agrees with the thrust limit computed by the EECs/ECUs (according to the thrust lever position), idle thrust in descent or optimum thrust computed by the FMGEC,
- RETARD mode: the thrust is reduced and maintained at idle during flare,
- ALPHAFLOOR PROTECTION: a TO/GA thrust is activated to protect the A/C against excessive angle-of-attack and windshear.

DEFAULT MODE

When no longitudinal mode is active, the A/THR operates in SPEED/MACH modes except:
- when THRUST mode engages automatically in case of alphafloor protection activation,
- when, autothrust being in RETARD, APs and FDs disengage, the autothrust function remains in RETARD mode.

ALPHAFLOOR

The autothrust function protects against an excessive angle-of-attack. The alphafloor detection is ensured by each Flight Control Primary Computer (FCPC). In case of excessive angle-of-attack, the FCPCs send a detection signal to the FMGECs, which activates the alphafloor protection.
The alphafloor protection automatically engages and activates the autothrust function, whatever the position of the thrust levers and the A/THR engagement status: the engine thrust becomes equal to TO/GA thrust.
When the autothrust is active with the alphafloor protection active, a green message "A.FLOOR" surrounded by a flashing amber box is displayed on the FMA.
When the autothrust is active with the alphafloor protection active but with the alphafloor detection no longer present in the FCPCs, a green message "TOGALK" (LK for LOCK) surrounded by a flashing amber box is displayed on the FMA.
The "TOGALK" thrust can only be cancelled through the disengagement of the autothrust function, via the A/THR P/B or the autothrust instinctive disconnect switches.

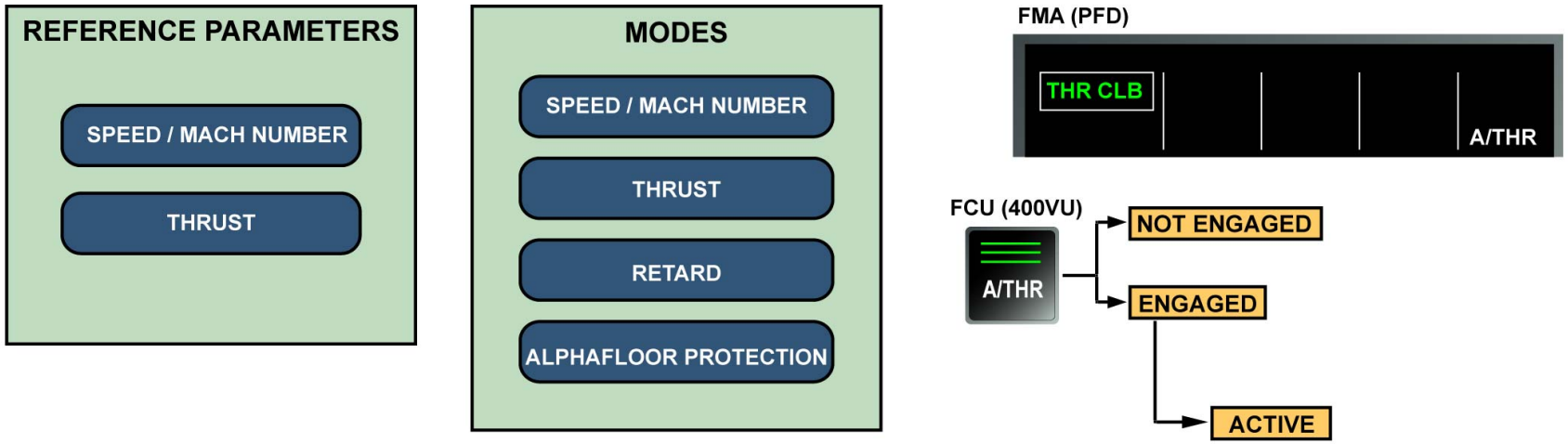

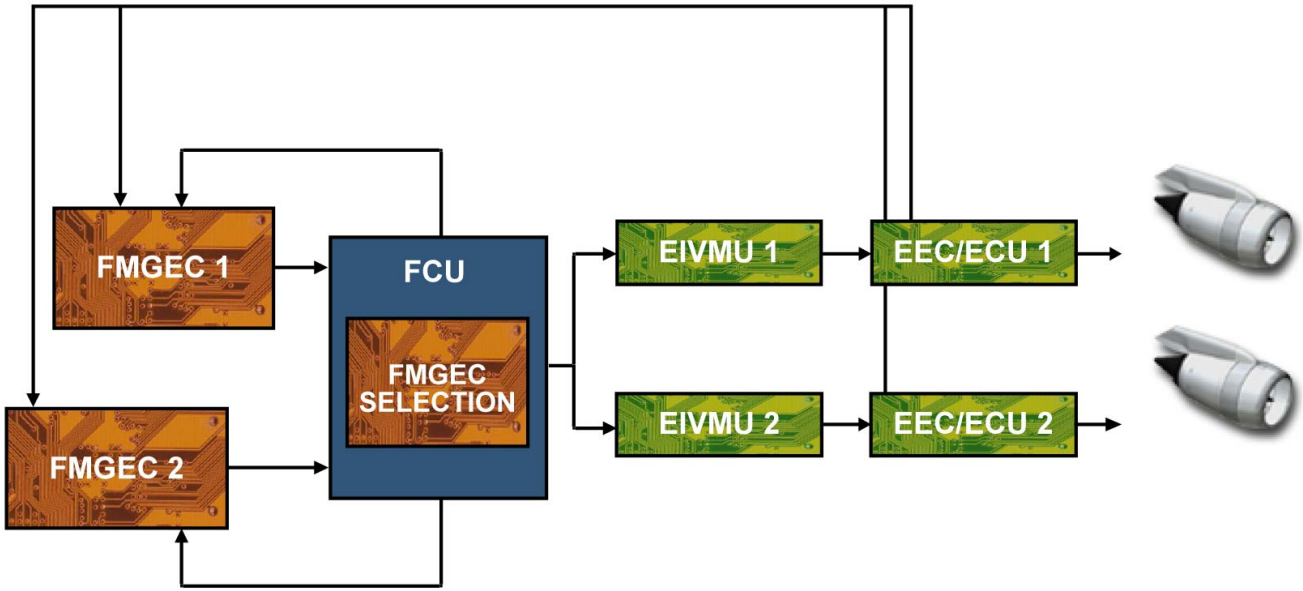

MODES & ALPHAFLOOR

G7508471 - G7OT0T0 - FM22D3F22GK0103

FLIGHT GUIDANCE AUTOTHRUST D/O (3)

A/THR OPERATION IN FLIGHT

Let's now see the autothrust operation in flight.

TAKE-OFF

The A/C is on ground and ready for take-off, the engines are controlled by the thrust levers and neither AP nor autothrust are engaged. To take off, the pilot sets the thrust levers to the TO/GA stop, or to the FLX/MCT detent provided a flexible temperature was previously selected on the MCDU. This engages the autothrust function (but it is not active).

THRUST REDUCTION ALTITUDE

At thrust reduction altitude, a message on the FMAs warns the pilots to set the thrust levers in the CL detent. As soon as the thrust levers are in the CL detent, the autothrust is active. If a thrust lever is set into the CL - MCT area, a message on the FMAs warns the pilot to set the thrust lever to the CL detent (LVR CLB). The autothrust remains active. Then, the thrust levers remain in this position until the approach phase.

AUTOMATIC LANDING

During AUTOMATIC LANDING, before touch-down, an auto call-out, "RETARD", warns the pilot to set the thrust levers to idle. When the pilot put both levers on idle detent, the autothrust disengages. This allows the automatic activation of the ground spoilers if they are in armed condition. Then, on GROUND, the pilot sets the T/R levers to the reverse position.

G7508471 - G7OT0T0 - FM22D3F22GK0103

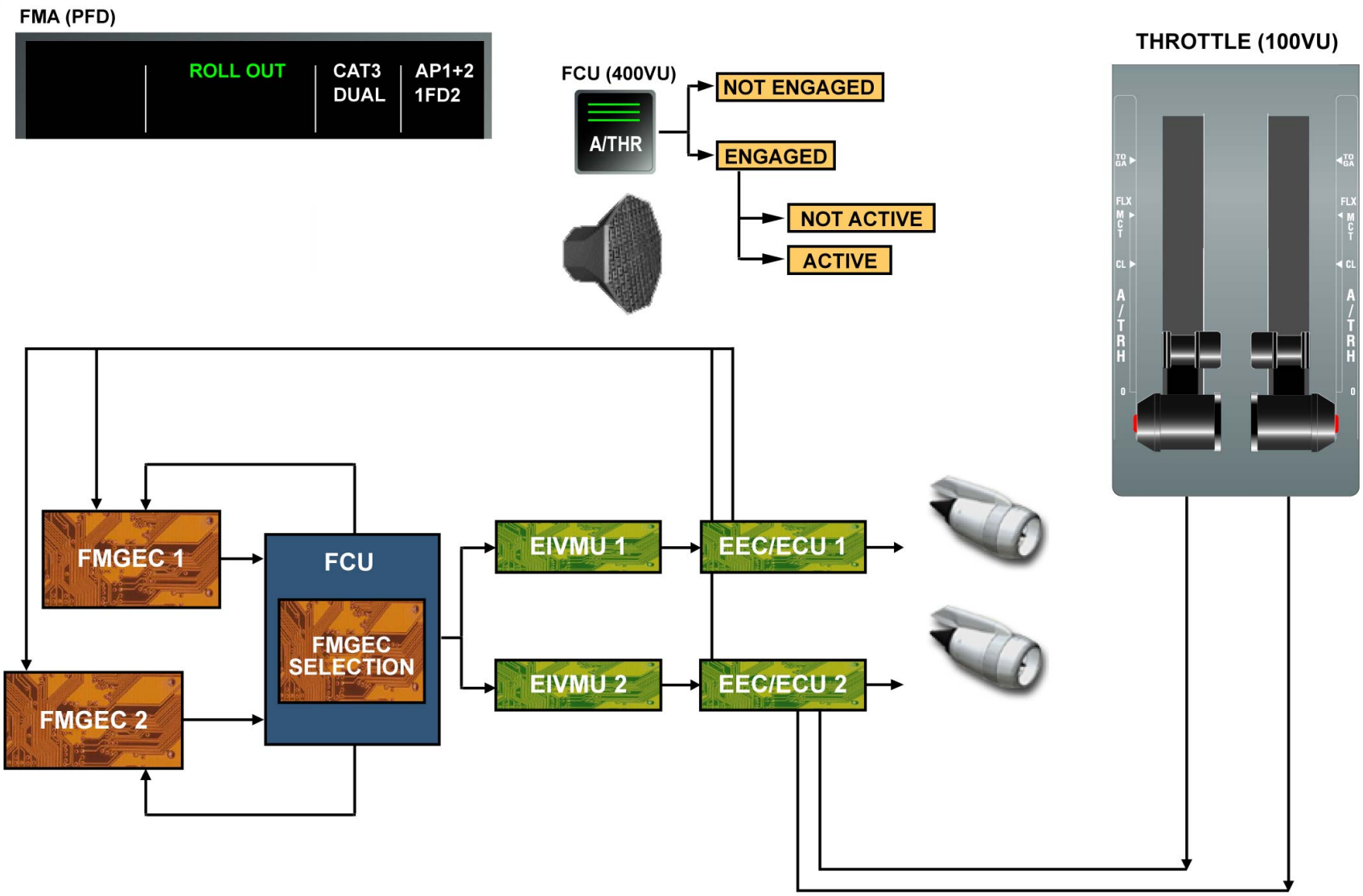

A/THR OPERATION IN FLIGHT - TAKE-OFF ... AUTOMATIC LANDING

G7508471 - G7OT0T0 - FM22D3F22GK0103

FLIGHT GUIDANCE AUTOTHRUST D/O (3)

DISCONNECTION

The autothrust can be disengaged in two ways.
- standard disconnection: By pressing at least one of the two red instinctive disconnect switches on the side of thrust levers or setting all thrust levers to IDLE detent.
- non standard disconnection: By pressing the A/THR P/B on the FCU or failure mode affecting one of the engagement condition. When the autothrust function is active, the actual engine thrust does not necessarily agree with the thrust lever position.

DISCONNECTION CONSEQUENCES

It is important to know what happens after autothrust disconnection. When the autothrust function is disengaged through the instinctive disconnect switches, or setting the levers on IDLE, the thrust on the engines is automatically adapted to the related thrust lever position. When the autothrust function is disengaged through the FCU A/THR P/B or due to a system failure:
- as long as a thrust lever remains in its detent, the thrust on the related engine is frozen at its last value just before the disconnection,
- as soon as a thrust lever is moved from the detent, or if it was not in a detent, the thrust on the related engine is smoothly adapted to the thrust lever position.

G7508471 - G7OT0T0 - FM22D3F22GK0103

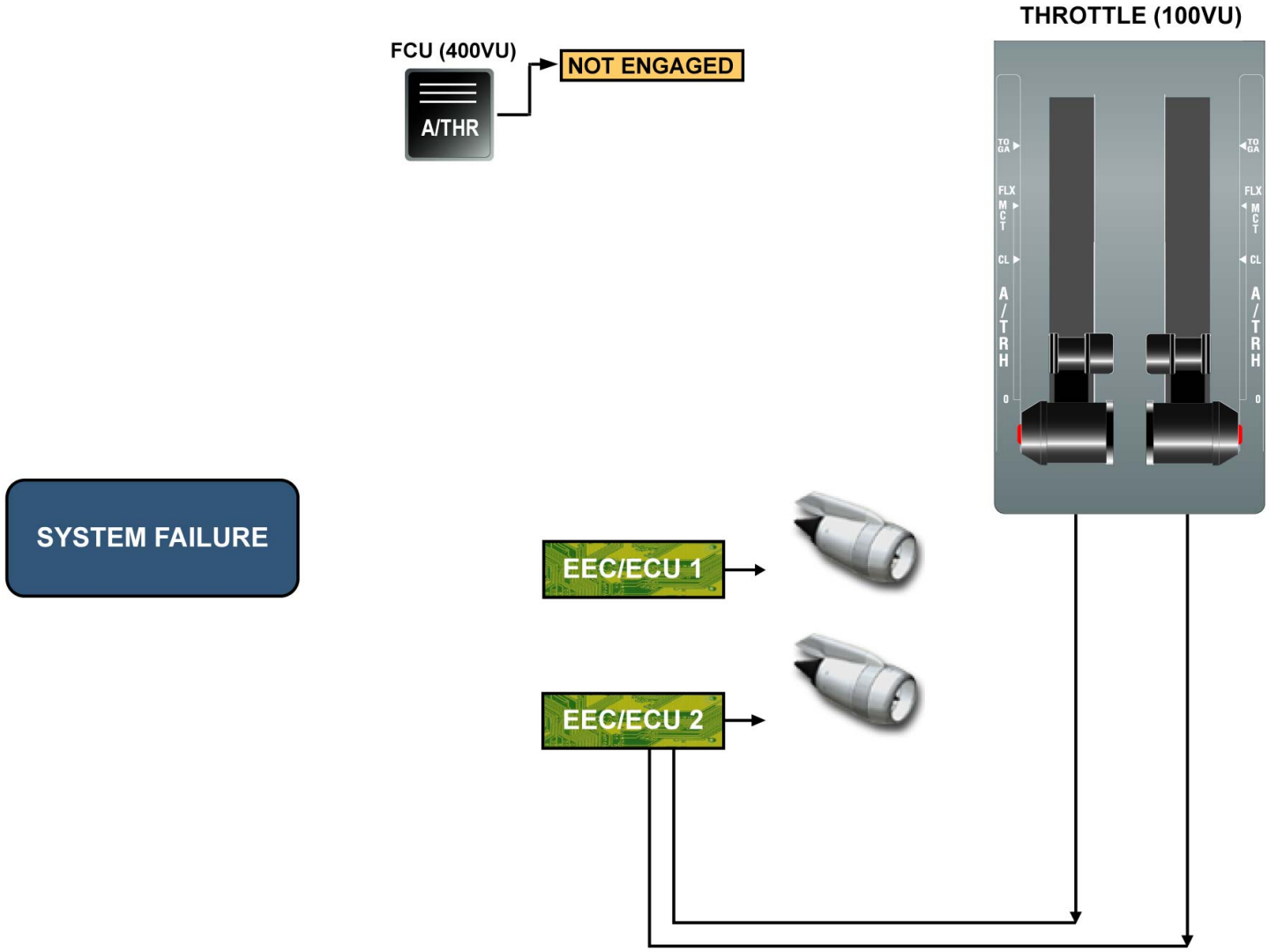

DISCONNECTION - DISCONNECTION CONSEQUENCES

FLIGHT GUIDANCE PRIORITY LOGIC D/O (3)

FLIGHT GUIDANCE (FG)

The engagement status of the guidance function works on the MASTER/SLAVE principle. The master Flight Management Guidance and Envelope Computer (FMGEC) imposes all the changes of AP/Flight Director (FD) modes and/or A/THR engagement to the slave FMGEC. Here is an example of a master FMGEC. Look at the flow chart to understand the priority logic. With no AP, no FD1 but FD2 engaged, FMGEC2 is the master because, following the flow chart, the first three answers are "NO", but the fourth one is "YES".

G7508471 - G7OT0T0 - FM22D4F22GB0102

GUIDANCE FUNCTION: ENGAGEMENT STATUS

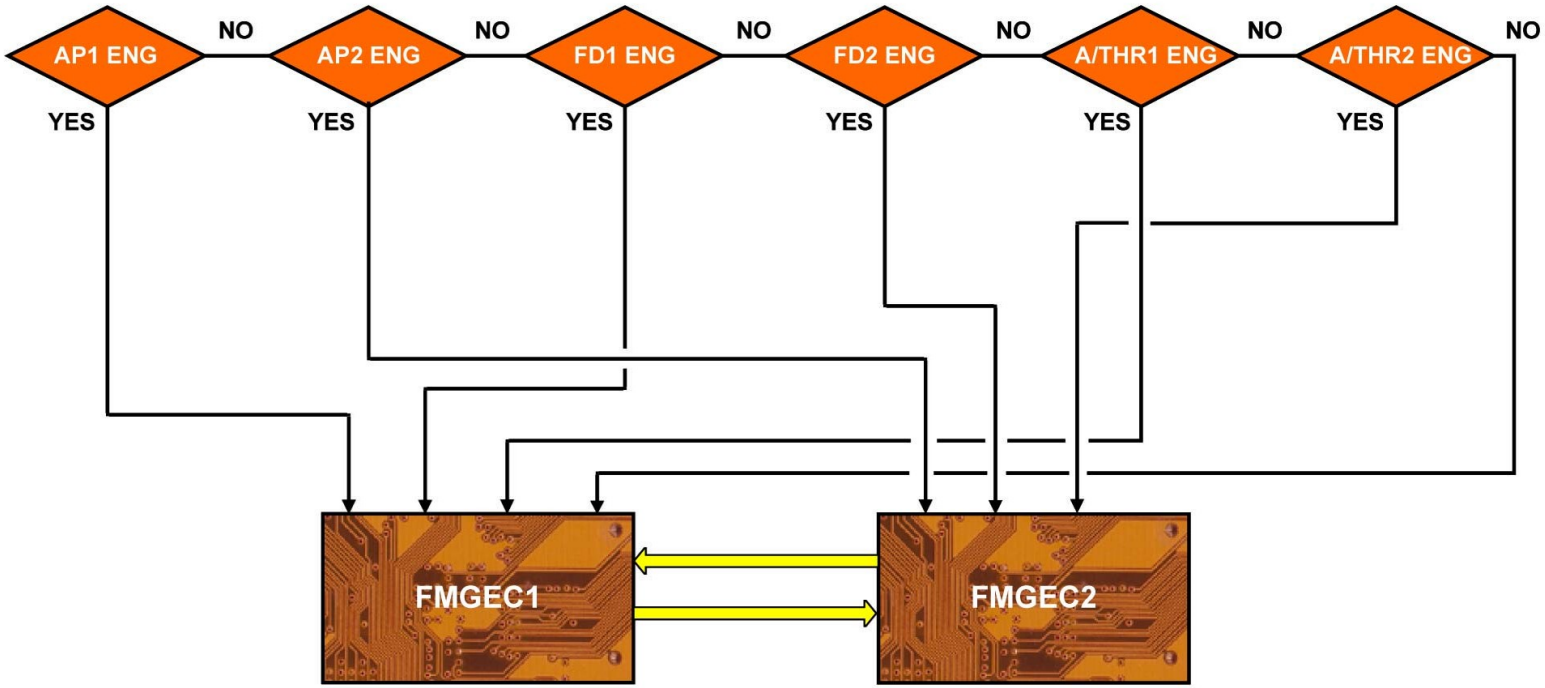

- A/THR: AUTOTHRUST
- AP: AUTO PILOT
- FD: FLIGHT DISPLAY
- FMGEC: FLIGHT MANAGEMENT GUIDANCE AND ENVELOPE COMPUTER

FLIGHT GUIDANCE (FG)

G7508471 - G7OT0T0 - FM22D4F22GB0102

FLIGHT GUIDANCE PRIORITY LOGIC D/O (3)

FLIGHT DIRECTOR (FD)

Upon energization, both FDs are normally engaged in split configuration. FMGEC1 normally drives the FD symbols (crossed bars or flight path director symbols) on the CAPT PFD. FMGEC2 normally drives the FD symbols on the First Officer (F/O) PFD. The "1FD2" indication is displayed on each Flight Mode Annunciator (FMA) to show that FD1 is engaged on the CAPT side and FD2 is engaged on the F/O side.
If one FMGEC fails, the remaining FMGEC drives the FD symbols on both PFDs. If FMGEC1 fails, the "2FD2" indication is displayed on each FMA to show that FD2 is displayed on both PFDs.
If both FDs fail, a red flag is displayed on both PFDs, provided that the FD switch is still "ON".

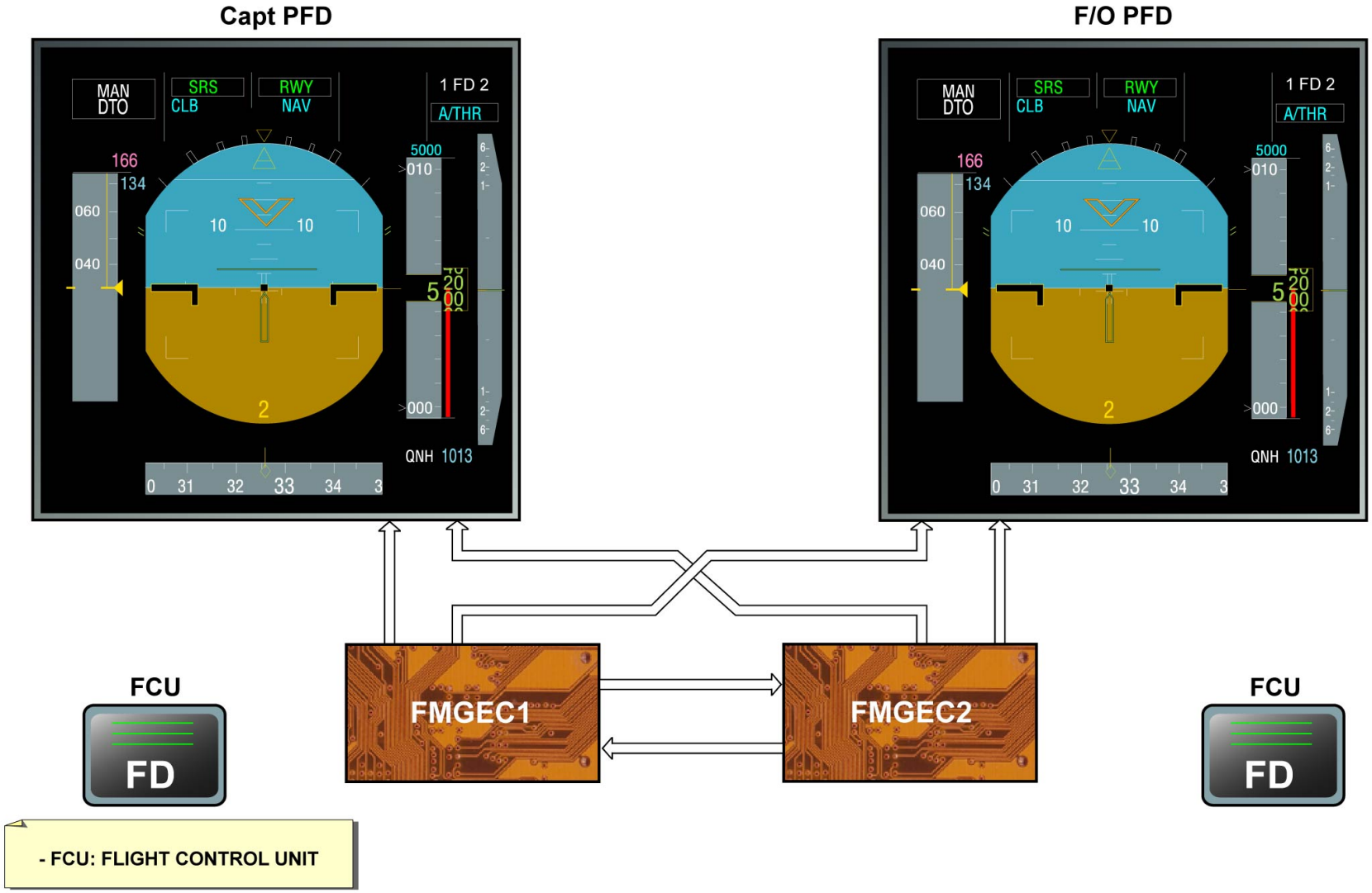

FLIGHT DIRECTOR (FD)

G7508471 - G7OT0T0 - FM22D4F22GB0102

FLIGHT GUIDANCE PRIORITY LOGIC D/O (3)

AUTOPILOT (AP)

If one AP is engaged, the corresponding FMGEC send signals to the Flight Control Primary Computers (FCPCs), which will control the flight control surfaces.
There is no priority logic in single operation. The last engaged AP is the active one.
Both APs can be engaged as soon as the APPROACH mode is selected on the Flight Control Unit (FCU). AP1 has priority and AP2 is in synchronisation. This means the FCPCs use the AP1 commands first. The FCPCs switch to the AP2 commands in case of AP1 disengagement.

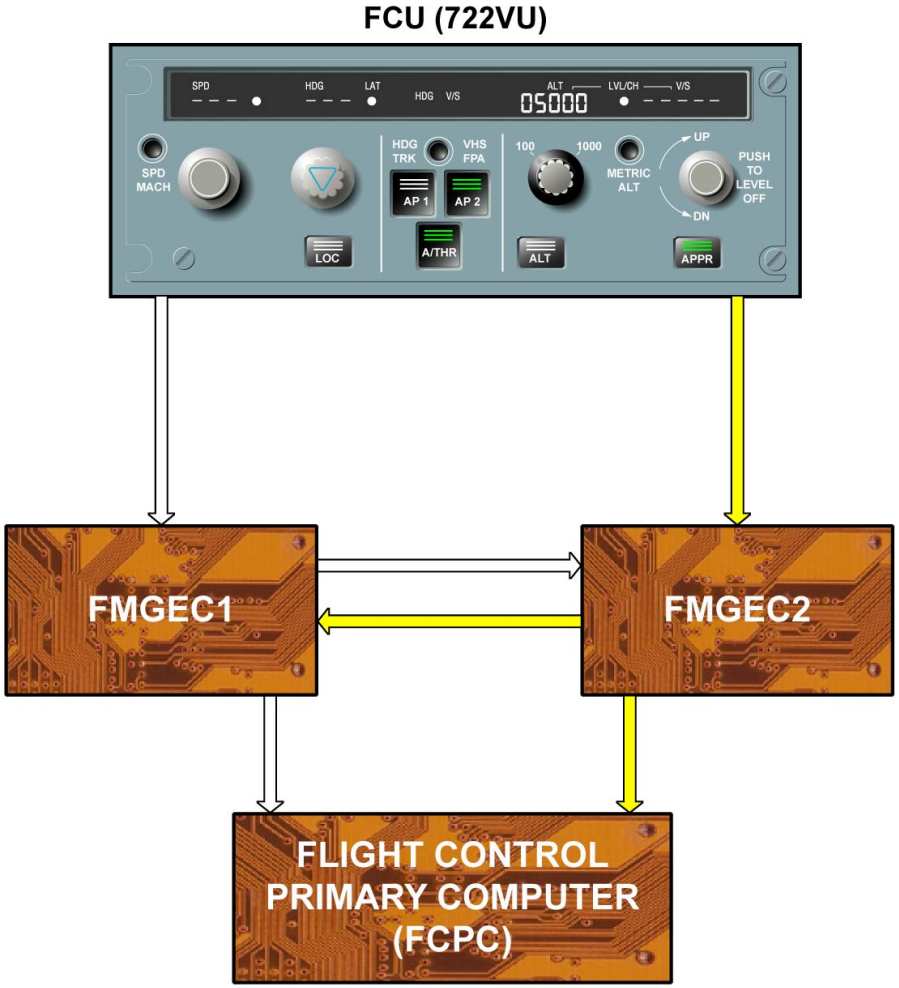

AUTOPILOT (AP)

FLIGHT GUIDANCE PRIORITY LOGIC D/O (3)

AUTOTHRUST (A/THR)

A single A/THR P/BSW located on the FCU enables the engagement or disengagement of the A/THR function.
The A/THR function is, in fact, composed of two systems (A/THR1 and A/THR2) which are ready to be engaged at the same time, but only one system is selected. However the selection of A/THR1 or 2 depends on the engagement of the AP and FD, i.e. of the master/slave principle which is known by the FCU and summarized in the table.
When the selected A/THR function is active (according to the thrust lever position), the master FMGEC sends signals via the FCU to the FADEC, which will control the engines. Consequently, in automatic control, it is the same FMGEC which will command orders both to the engines and the flight controls.
To recover the A/THR function, when one AP (AP1 or 2) is engaged and its own A/THR has failed, the opposite AP should be engaged to switch from the master FMGEC to the other (which now becomes the master) and to switch to the opposite A/THR.

G7508471 - G7OT0T0 - FM22D4F22GB0102

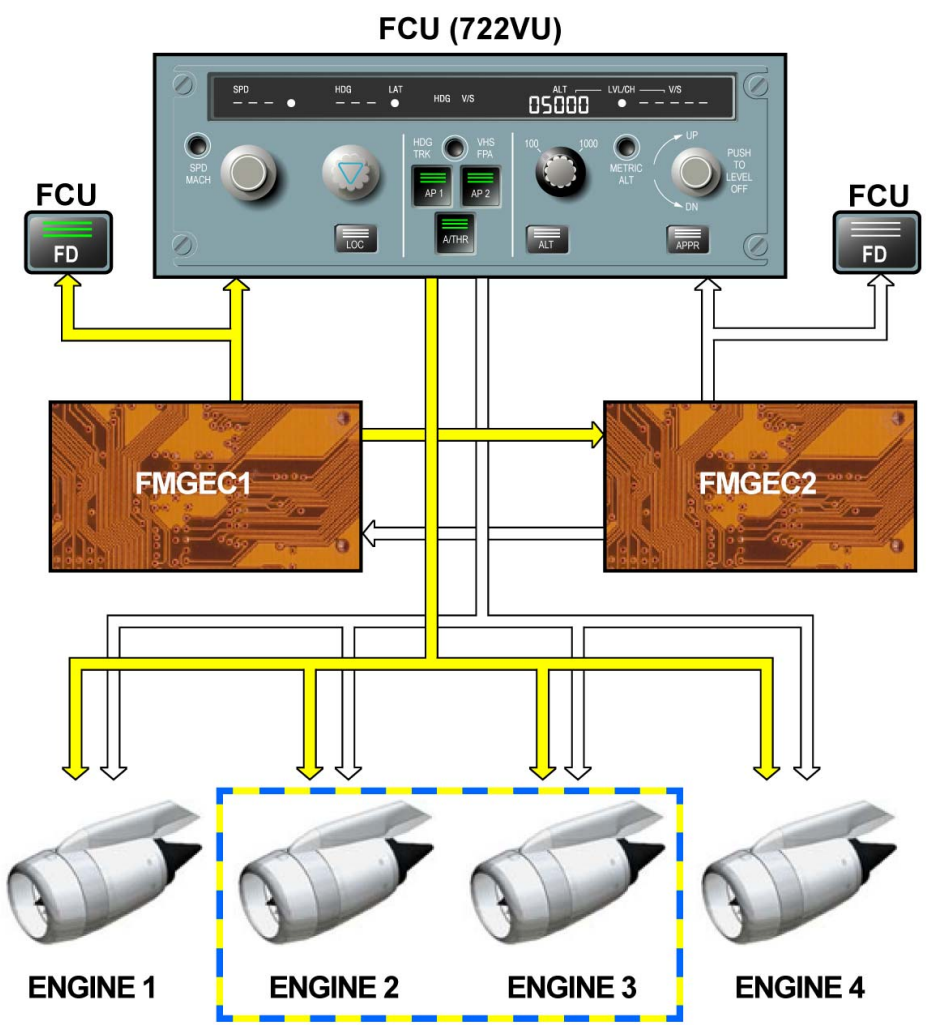

ENGAGT OF AP		ENGAGT OF FD		A/THR ACTIVE
1	2	1	2	
ON	*	*	*	A/THR 1
OFF	ON	*	*	A/THR 2
OFF	OFF	ON	*	A/THR 1
OFF	OFF	OFF	ON	A/THR 2
OFF	OFF	OFF	OFF	A/THR 1, OR A/THR2 IF A/THR 1 FAILS

* ON or OFF

AUTOTHRUST (A/THR)

FLIGHT GUIDANCE PRIORITY LOGIC D/O (3)

FLIGHT MODE ANNUNCIATOR (FMA)

There are three types of information shown on the FMA:
- A/THR mode and status,
- AP/FD mode and status,
- Flight Management (FM) messages.

The A/THR information is displayed by the master FMGEC which supplies both FMAs.
The AP/FD information is displayed according to the following logic:
- with at least one AP, the master FMGEC supplies both FMAs,
- without AP, with the FDs engaged, FMGEC1 supplies FMA1, FMGEC2 supplies FMA2,
- without AP, with one FD failed or manually disengaged, the opposite FMGEC supplies both FMAs.

G7508471 - G7OT0T0 - FM22D4F22GB0102

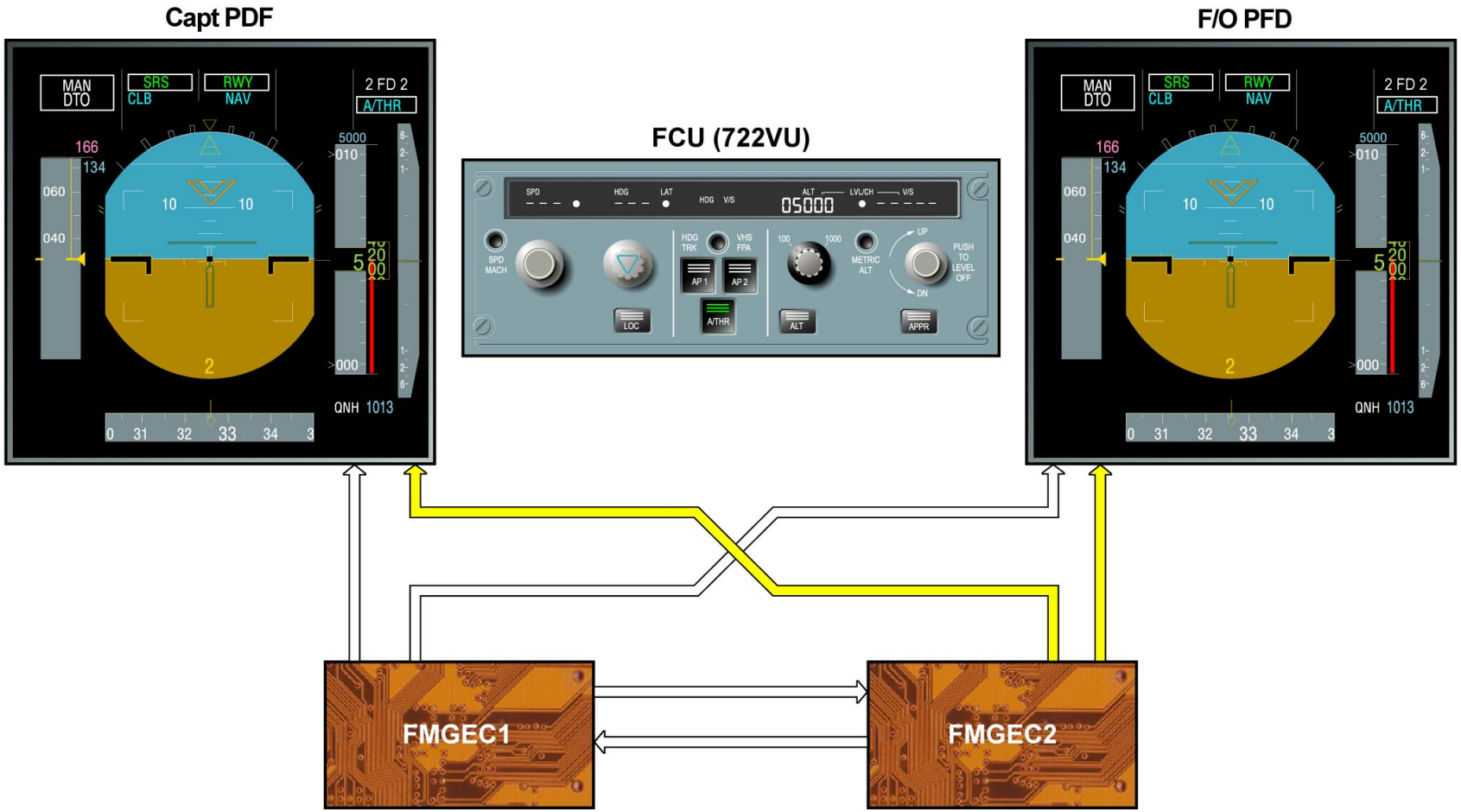

FLIGHT MODE ANNUNCIATOR (FMA)

G7508471 - G7OT0T0 - FM22D4F22GB0102

FLIGHT GUIDANCE PRIORITY LOGIC D/O (3)

FLIGHT CONTROL UNIT (FCU)

The FCU ensures the interface between the crew and the following three systems:
- Automatic Flight System (AFS),
- EFIS left (including the baro-setting),
- EFIS right (including the baro-setting).

The FCU central processing unit consists of two identical computation channels B and C. In normal operating conditions, each computation channel performs a specific function as follows:
- channel B: EFIS LEFT and AFS,
- channel C: EFIS RIGHT.

In the event of a failure of one channel, there is reconfiguration on the remaining channel. This logic enables the maximum availability of FCU functions. Each channel receives all data required to ensure the three functions.

G7508471 - G7OT0T0 - FM22D4F22GB0102

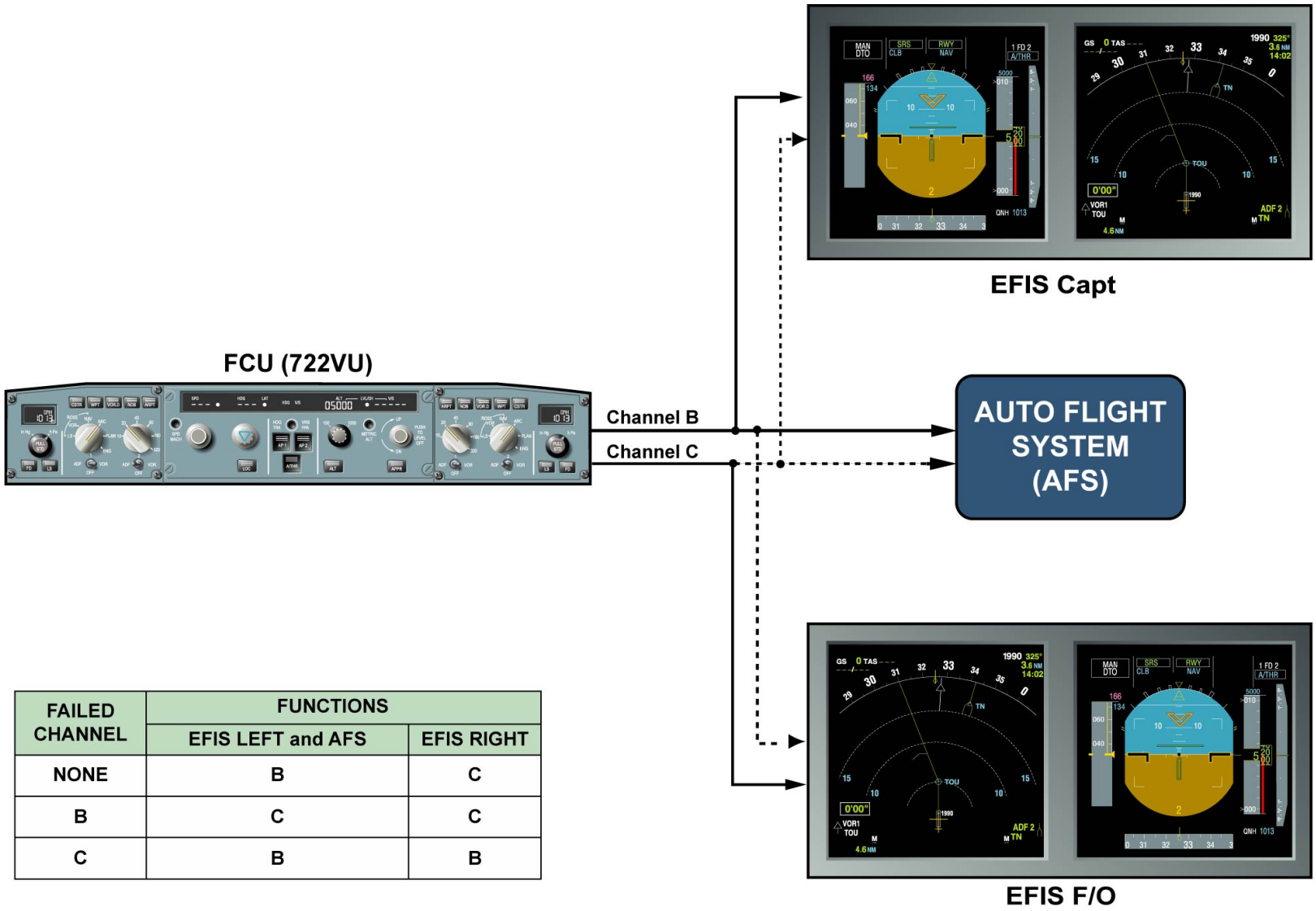

FAILED CHANNEL	FUNCTIONS	
	EFIS LEFT and AFS	EFIS RIGHT
NONE	B	C
B	C	C
C	B	B

FLIGHT CONTROL UNIT (FCU)

G7508471 - G7OT0T0 - FM22D4F22GB0102

AP/FD & ATHR MODES D/O (3)

AP/FD MODES

GENERAL

The operational use of the Automatic Flight System (AFS) is based on the following principle:
- the short-term pilot orders are entered through the Flight Control Unit (FCU),
- the long-term pilot orders are entered through the MCDU.

This principle leads to two types of Autopilot (AP)/Flight Director (FD) operating modes to guide the aircraft:
- the selected modes and,
- the managed modes.

In the selected modes, the pilot selects reference parameters on the FCU (heading/track, vertical speed/flight path angle, speed/Mach, altitude). To do this, the pilot turns the relevant selector knob on the FCU to set the parameter, and then pulls the knob.

In the managed modes, the Flight Management Guidance and Envelope Computer (FMGEC) uses data entered on the MCDU to compute the reference parameters. To set a parameter in the managed mode, the pilot pushes the relevant selector knob on the FCU. A dashed line on the FCU shows the managed mode (except altitude which is always displayed) and a white indicator light comes on adjacent to the display involved.

G7508471 - G7OT0T0 - FM22DE000000001

Flight Control Unit (FCU)

MCDU

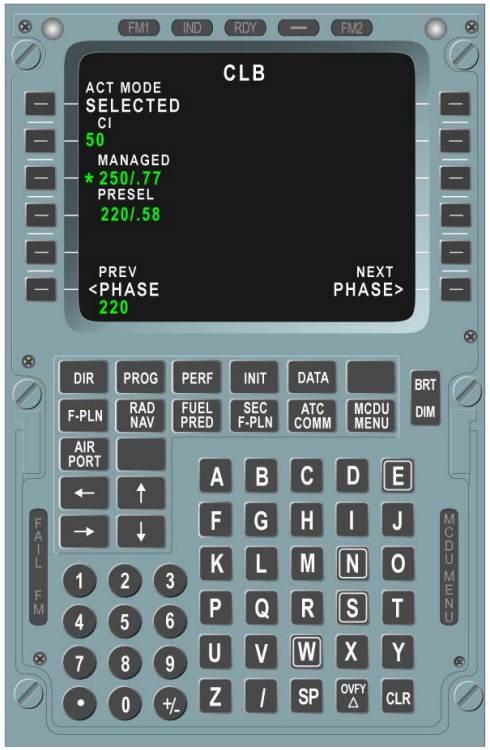

AP/FD MODES - GENERAL

Flight Control Unit (FCU)

MCDU

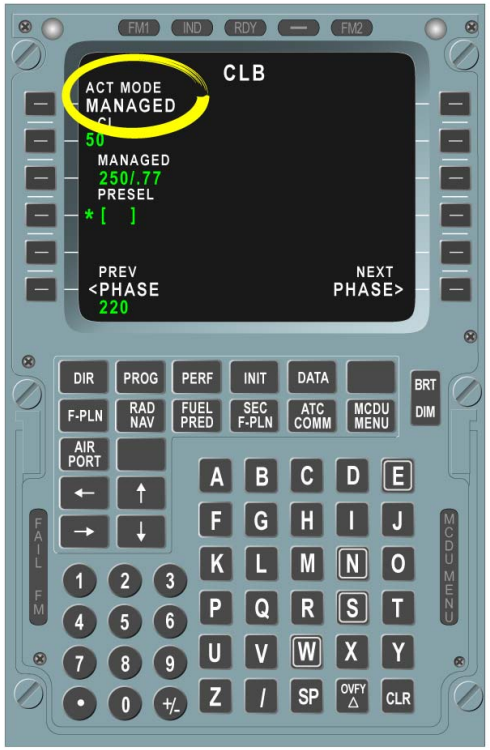

AP/FD MODES - GENERAL

This Page Intentionally Left Blank

G7508471 - G7OT0T0 - FM22DE000000001

AP/FD & ATHR MODES D/O (3)

AP/FD MODES (continued)

SELECTED MODES

In the selected modes, the pilot can engage the modes by pulling out the appropriate FCU selection knobs. There are two categories of AP/FD modes:
- vertical modes, which include the speed control modes,
- lateral modes.

The selected AP/FD lateral mode is the heading, track mode (HDG-TRK), also called basic mode. The selected AP/FD vertical modes are:
- Open Climb mode (OP CLB),
- Open Descent mode (OP DES),
- Vertical Speed mode (V/S) or Flight Path Angle (FPA) mode, also called basic modes,
- Altitude capture mode (ALT*),
- Altitude hold mode (ALT).

MANAGED MODES

At takeoff, the managed modes engage automatically when the pilot sets the thrust levers at the TO or FLX detent. During flight, the pilot can arm or engage the managed modes (if the aircraft meets engagement conditions) by pushing in the appropriate knobs on the FCU. The pilot pushes the DIR TO key on the MCDU to insert a DIR TO leg. It engages or maintains the navigation (NAV) mode. The pilot pushes the APPR P/B on the FCU to arm or engage the localizer (LOC) and Glide Slope (G/S) or APP NAV-FINAL, according to the approach type inserted in the flight plan. The LOC P/B arms or engages only the LOC mode.

The managed AP/FD lateral modes are:
- NAV mode (NAV),
- Approach Nav mode (APP NAV),
- Localizer capture mode (LOC*),
- LOC track mode (LOC)
- LOC Back Course mode (LOC B/C)
- Runway (RWY) or Runway Track mode (RWY TRK),
- Go Around Track mode (GA TRK),
- Roll out mode. (ROLL OUT).

The managed AP/FD vertical modes are:
- SRS mode (SRS) used for takeoff and Go-Around,
- Climb mode (CLB),
- Descent mode (DES),
- Altitude capture mode (ALT*),
- Altitude hold mode (ALT),
- Altitude Constraint capture mode (ALT CST*),
- Altitude Constraint hold mode (ALT CST),
- G/S capture mode (G/S*),
- Glide slope mode (G/S),
- FINAL mode (non precision approach),
- FLARE mode (Autoland).

NOTE: Automatic approach, landing, takeoff and go-around are considered as managed modes because no parameters are entered through the FCU.

Flight Control Unit (FCU)

GUIDANCE	MANAGED MODES	SELECTED MODES
LATERAL	NAV, APP NAV B/C*, B/C, LOC*, LOC RWY RWY TRK GA TRK ROLL OUT	HDG - TRK
VERTICAL	SRS (T.O and G.A) CLB, DES ALT*, ALT ALT CSTR*, ALT CSTR G/S*, G/S FINAL, FLARE	OP CLB, OP DES V/S, FPA ALT*, ALT
SPEED	FMGC REFERENCE (ECON, Auto SPD, SPD LIM)	FCU REFERENCE

AP/FD MODES - SELECTED MODES & MANAGED MODES

G7508471 - G7OT0T0 - FM22DE000000001

AP/FD & ATHR MODES D/O (3)

A/THR MODES

GENERAL

The A/THR mode selection is automatic according to AP/FD mode engagement. The thrust control mode directly depends on the AP/FD vertical guidance mode. If no AP/FD is engaged, the A/THR can be engaged in SPD/MACH mode. The alpha floor protection commands the maximun takeoff thrust whatever the A/THR engaged mode.

SPD/MACH MODE

In SPEED/MACH mode, the A/THR adjusts the thrust in order to acquire and hold a speed or Mach target. The speed or Mach target may be:
- selected on the FCU by the pilot,
- managed by the FMGEC.

The change-over from SPD to MACH mode is either automatically done by the FMGEC or manually by the pilots by pushing the SPD/MACH change-over P/B on the FCU.

THRUST MODE

In THRUST mode, autothrust commands a specific thrust level in conjunction with the AP/FD pitch mode. This thrust level is limited by the thrust lever position.

RETARD MODE

The RETARD mode is available only in automatic landing (AP engaged in LAND mode). In these conditions, the RETARD mode is engaged when the Radio Altitude (RA) becomes lower than 50 ft. If the AP is disengaged during flare-out before touchdown, the RETARD mode is replaced by the SPD/MACH mode. On ground this logic is not active and the RETARD mode is kept.

NOTE: In automatic landing, the Flight Warning Computer (FWC) auto call out delivers a RETARD message at 10 ft; the pilot moves the throttle control levers to the IDLE position and thus takes manual control of the thrust at landing. With the A/THR engaged but not in the automatic landing conditions, this message is delivered at 20 ft.

G7508471 - G7OT0T0 - FM22DE000000001

A/THR in THRUST MODE	AP/FD PITCH MODE MAINTAINS THE SPEED : OP CLB - OP DES - CLB - SRS - FLARE and DES (IDLE path)
A/THR in SPEED/MACH MODE	IF NEITHER AP NOR FD IS ENGAGED
	IF AP/FD CONTROLS A VERTICAL PATH: V/S-FPA - ALT*- ALT CST* - ALT - ALT CRZ - G/S* G/S - FINAL and DES (geometric path)
A/THR in RETARD MODE	AUTOMATIC LANDING (AP ENGAGED in LAND MODE)

A/THR MODES - GENERAL ... RETARD MODE

FLIGHT MANAGEMENT GENERAL DESCRIPTION (3)

GENERAL

To help the pilots, the Flight Management (FM) functional part of the Flight Management Guidance and Envelope Computers (FMGECs) performs several functions linked to the flight plan such as lateral and vertical guidance, or display management. To achieve its objectives, the FM part is mainly based on:
- a navigation database and a performance database,
- lateral functions,
- vertical functions,
- performance functions.

G7508471 - G7OT0T0 - FM22DD000000001

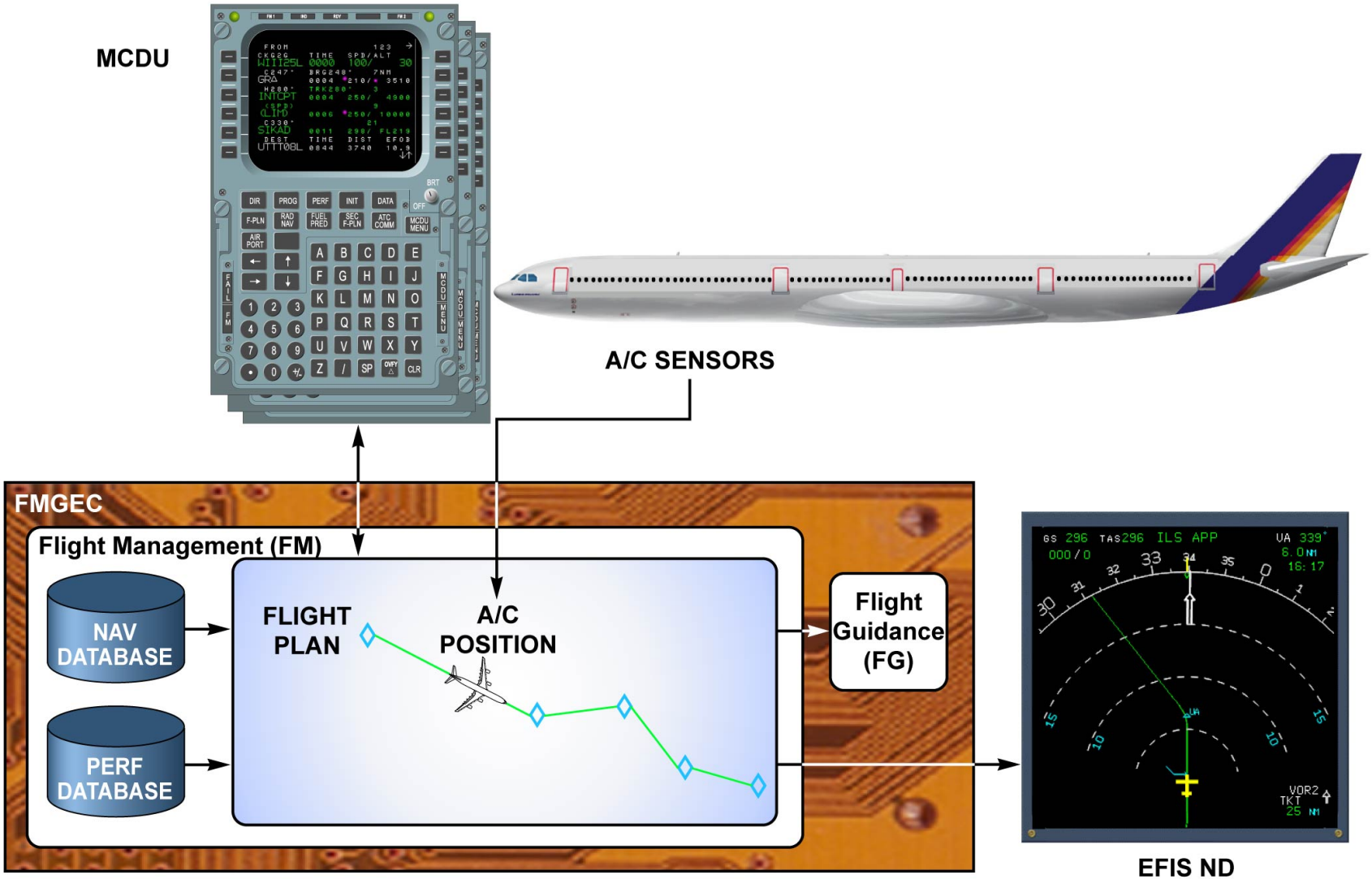

FMGEC: Flight Management Guidance and Envelope Computer

GENERAL

FLIGHT MANAGEMENT GENERAL DESCRIPTION (3)

FLIGHT PLAN

The FM part enables the pilots to initialize, revise and monitor a flight plan through the MCDUs. In addition, monitoring is also provided through the Electronic Flight Instrument System (EFIS) NDs and PFDs. The FM part ensures flight plan tracking and optimization. The flight plan is divided into 2 parts: a lateral part and a vertical part. The lateral part gives the direction to follow while the vertical part gives the different altitude steps with associated speed and time constraints. The FM part performs the flight plan sequencing computation for both parts of the flight plan.

DATABASE

The database is a mass memory divided into 2 parts. The navigation database is used to construct the lateral flight plan with waypoints, radio navigation aids and runways. The navigation database provides a worldwide coverage. Its content is updated every 28 days by the airline using a Multipurpose Disk Drive Unit (MDDU). A small space in the memory is reserved for pilot entries for creating new waypoints or radio navigation aids. The performance database, with aircraft aerodynamic and engine models, enables vertical flight plan construction and optimization. The performance database contains fixed data that can only be changed by the manufacturer.

LATERAL FUNCTIONS

The FM part, in association with the navigation database and the MCDUs, performs lateral functions. The lateral functions are:
- lateral flight plan selection and revision,
- initialization of the Inertial Reference System (IRS) and use of its data for the aircraft position computation (FM position),
- radio navigation aid selection and tuning (for VOR, DME, ADF, ILS),
- ND management for flight plan navigation related data including the aircraft position and its lateral deviation from the flight plan,
- computation of lateral steering orders to be followed by the Flight Guidance (FG) functional part.

VERTICAL FUNCTIONS

The FM part performs vertical functions in accordance with the lateral flight plan and data either retrieved from the performance database or entered by the pilots through the MCDUs (for example cost index, Center of Gravity, weight). The vertical functions are:
- vertical flight plan construction according to altitude, speed and time constraints,
- ND and PFD management for guidance related data such as altitude constraints,
- computation of vertical steering orders and thrust demand to be followed by the FG functional part.

Note that, to allow the vertical guidance, the lateral guidance must already be active.

PERFORMANCE OPTIMIZATION

The FM part optimizes the flight plan in terms of speed, thrust, optimum and maximum altitudes. Predictions are provided along the flight plan and used as a reference for the vertical guidance. This function enables the flight cost to be minimized by the optimization of speed, fuel planning and time.

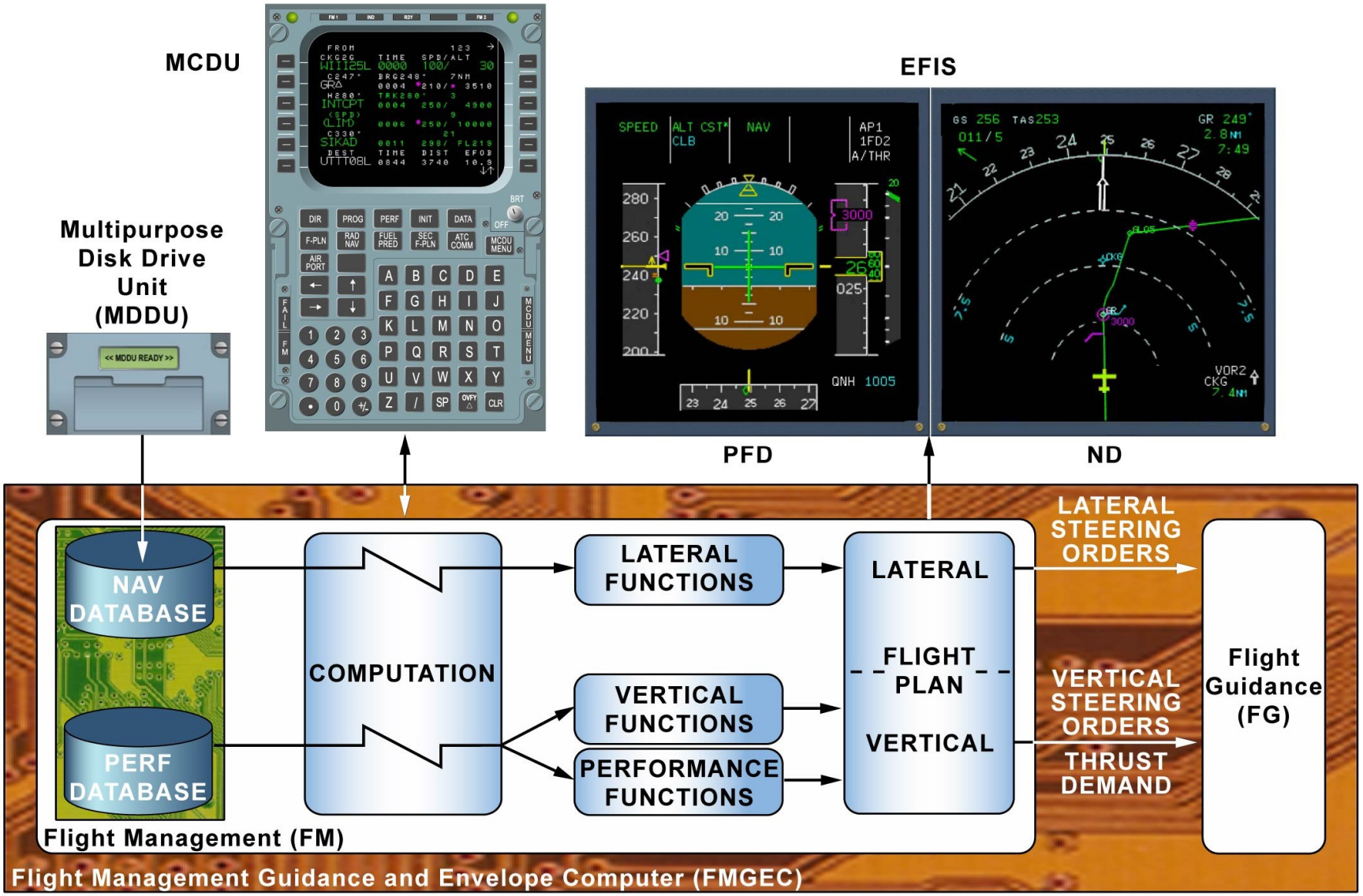

FLIGHT PLAN ... PERFORMANCE OPTIMIZATION

G7508471 - G7OT0T0 - FM22DD000000001

FLIGHT PLANNING D/O (3)

FLIGHT PLAN

The flight plan is defined by various elements, which indicate the routes the A/C must follow with the limitations along these routes.
The elements are mainly taken from the databases or directly entered by the pilot. The limitations are mainly speed, altitude or time constraints originated by the ATC. The function that integrates these elements and limitations to construct a flight plan is called FLIGHT PLANNING. In addition to this, the Flight Management (FM) part provides the A/C position and the follow-up of the flight plan, this is called NAVIGATION. Everything can be prepared prior to take-off but can also be modified quickly and easily during the flight operation.
In case of an FM problem, the remaining valid Flight Management Guidance and Envelope Computer (FMGEC) can be used as the sole source to command both MCDUs and NDs after a manual action by the pilot on the FM SOURCE selector.

NAVIGATION DATABASE

The navigation database provides all necessary information for flight plan construction and follow-up. The pilot will either select an already assembled flight plan (company route (CO ROUTE)), or will build his own flight plan, using the existing database contents. This database has a worldwide coverage, updated every 28 days. A crossloading facility is available allowing the database loading from either FMGEC database through an intersystem bus. Besides this, some room is kept to allow manual entry of 20 navaids, 20 waypoints, 5 routes and 10 runways.
The database cannot be erased, except for the manually entered data.
Two cycle databases can be inserted, the selection is made automatically using data from the A/C clock.

NAVIGATION

The navigation process provides the system with current A/C state information consisting of present position, altitude, winds, true airspeed and ground speed. This is achieved using inputs from the Inertial Reference System (IRS), Air Data System (ADS), navigation radios and, Air Traffic Service Unit (ATSU). Position can be updated manually during the flight or automatically e.g.: on the runway threshold at take-off.

LATERAL FLIGHT PLAN

The lateral flight plan provides the sequential track changes at each waypoint within 3 main sections. DEPARTURE: In this phase the lateral flight plan provides initial FIX (origin airport), SID (Standard Instrument Departure), etc. EN ROUTE: In this phase the lateral flight plan provides waypoints, navigation aids, etc. ARRIVAL: In this phase the lateral flight plan provides STAR (Standard Terminal Arrival Route), approach, missed approach, go around, etc.
The lateral steering order can be followed by the pilot or the autopilot through the NAV mode selected on the Flight Control Unit (FCU).
In case of loss of both FM processors, a simplified FM function is available directly from MCDU1 or MCDU2 only. This is called BACK-UP NAVIGATION function. The following features are provided :
- lateral flight planning,
- A/C position,
- flight plan with crosstrack error (XTRKE).

In this case, there is no Autopilot coupling in NAV mode.

VERTICAL FLIGHT PLAN

The vertical flight plan provides an accurate flight path prediction, which requires a precise knowledge of current and forecast wind, temperature

G7508471 - G7OT0T0 - FM22D9F22MB0202

and the lateral flight path to be flown. The vertical flight plan is divided into several flight phases:
- the PREFLIGHT phase in which the vertical flight plan provides fuel, weight and V2 insertions,
- the TAKE-OFF phase in which the vertical flight plan provides speed management, thrust reduction, altitude and acceleration altitude,
- the CLIMB phase in which the vertical flight plan provides speed limit and speed management,
- the CRUISE phase in which the vertical flight plan provides top of climb, cruise altitude and top of descent,
- the DESCENT phase in which the vertical flight plan provides speed management and deceleration,
- the APPROACH/MISSED APPROACH/GO AROUND phase in which the vertical flight plan provides thrust/acceleration altitudes.

The vertical steering order can be followed by the pilot or the autopilot. Any level change in the vertical profile is initiated after a push action on a level change selector. The crew may send a request for wind data to the ground via the ATSU. In response to this request, or automatically, the ground sends climb, cruise, descent and alternate wind data to the A/C.

PERFORMANCE

The performance database contains optimal speed schedules for the expected range of operating conditions. Several performance modes are available to the operator with the primary one being the ECONOMY mode. The ECON mode can be tailored to meet specific airline requirements using a selectable COST INDEX (CI). A CI is defined as the ratio of cost of time to the cost of fuel. The fuel quantity is given by the Fuel Control and Monitoring Computers (FCMCs). The speed and the thrust values associated with a given CI are used to determine the climb and descent profiles. FUEL and TIME are the main "actors" in this particular part of the FM function and direct the airline choice.

DISPLAY

According to the pilot selection on the FCU, the flight plan is shown in relation to the A/C position on the ROSE-NAV or ARC modes. The A/C model is fixed and the chart moves. The difference between the two modes is that the half range is available when the ND is set to NAV mode as there is only a frontal view when it is set to ARC mode. In PLAN mode, the flight plan is shown, with NORTH at the top of the screen, centered on the TO waypoint (first waypoint to be met).
Depending on the selected range, the A/C may or may not be visualized on this display. The PLAN display can be centered on the waypoint displayed on the second line of the MCDU screen by scrolling the flight plan on the MCDU. The PFD shows the FM guidance following engagement of the AP/FD (Autopilot/Flight Director) lateral and longitudinal modes.

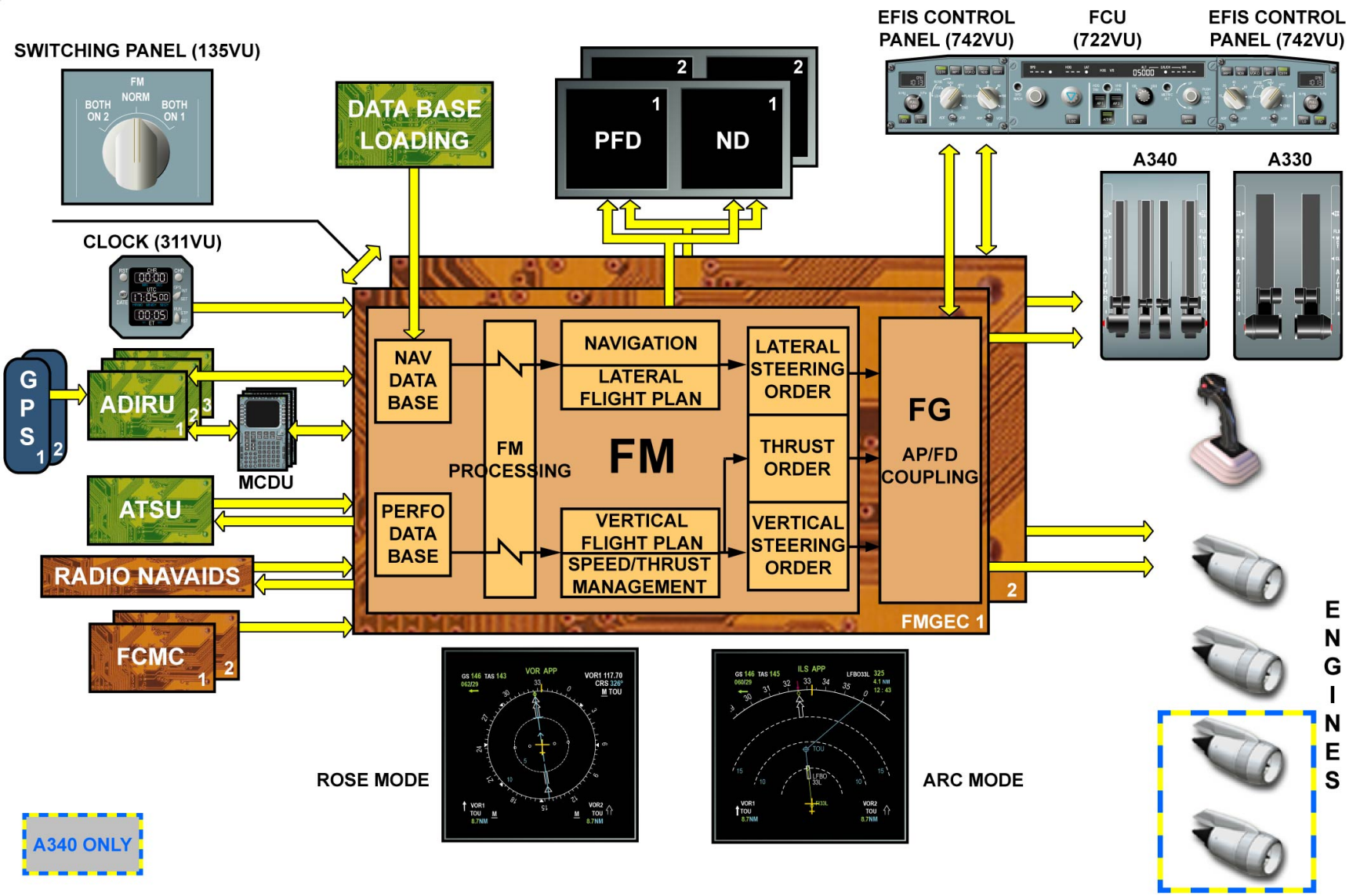

FLIGHT PLAN ... DISPLAY

G7508471 - G7OT0T0 - FM22D9F22MB0202

This Page Intentionally Left Blank

G7508471 - G7OT0T0 - FM22D9F22MB0202

FLIGHT MANAGEMENT PRIORITY LOGIC D/O (3)

FM OPERATING MODES

There are three operating modes: NORMAL, INDEPENDENT and SINGLE. At Flight Management (FM) initialization, that means at power-up, both FM parts exchange information. Initial cross-comparison is made on the following parameters: Navigation data base, performance data base and soft program serial numbers, A/C, engine type and program pin.
If the FM parts agree, NORMAL mode is active. When keys are pressed, they are immediately processed by both FMs, regardless of the MCDU from which they originate.
If the FM parts disagree, INDEPENDENT mode is active. Each FM part manages its own MCDU.
If one FM part has failed, SINGLE mode is active. Both MCDUs are driven by the remaining FM part.
Note: an FM failure or an independent configuration is indicated by the lighting of the corresponding legend "FM1", "FM2", "IND" on the top of the MCDUs.

MODE OPERATION

In NORMAL mode, the FM part receives the master/slave activation from the Flight Guidance (FG) part. The MASTER computer imposes the following parameters upon the SLAVE computer: Flight phase, flight plan sequencing, active performance mode and speeds, clearance and maximum altitudes and ILS frequencies and courses, if any.
After a flight plan change, there is a comparison on the active leg and, every second, on the active performance mode and active guidance mode. If it is different, the slave computer will synchronize itself to the master one by copying the master values.
Also, A/C position, Gross Weight (GW) and target speeds from master and slave computers are compared every second. If the difference is greater than 5 Nm, 2 tons or 2 Kts respectively, an appropriate message is displayed on the MCDUs: - FMS1/FMS2 POS DIFF, FMS1/FMS2 GW DIFF, FMS1/FMS2 SPD TGT DIFF. Pilot action is then required.
In INDEPENDENT mode, there is no interaction from one system to the other one. The Flight Management Guidance and Envelope Computers (FMGECs) only send their status information to each other (e.g., in this case, the INDEPENDENT mode).
In SINGLE mode, both MCDUs are driven by the same FM part, but they can still display different pages. Messages linked to the navigation process are displayed on both MCDUs.

MCDU

As already presented in the FM OPERATING MODES topic, the MCDUs work differently. In NORMAL mode, the MCDUs can be used simultaneously on different pages. Any modification or entry on one MCDU is transmitted to the other MCDU via the FMGEC crosstalk.
In INDEPENDENT mode, both MCDUs operate separately. The "IND" light, at the top of the MCDUs, indicates this operation.
In SINGLE mode, both MCDUs basically work as in normal mode, but with only the valid FMGEC. The "FM1" or "FM2" lights, at the top of the MCDUs, indicate the FM1 or FM2 failures.

DISPLAYS

FM information is displayed on NDs and on PFDs. For FM information, in NORMAL or INDEPENDENT modes, FMGEC1 supplies PFD1 and ND1, and FMGEC2 supplies PFD2 and ND2.
In SINGLE mode, the remaining FMGEC supplies all the displays.

RADIO NAVIGATION

The schematic shows the architecture of the radio navigation receivers controlled by the FMGECs in NORMAL or INDEPENDENT modes.
For the selection of radio navigation frequencies and courses, in normal or independent modes, each FMGEC controls its own side receivers

G7508471 - G7OT0T0 - FM22D6F22MI0102

through a Radio Management Panel (RMP). Only the actual frequencies and courses from the receivers are displayed on the PFDs and the NDs.
In case of a FMGEC failure, the valid FMGEC controls its own side receivers as usual, through an RMP, but also the other side receivers, directly without going through an RMP. The pilot must first transfer both FMs to the same source as you can see in topic "FM SWITCHING".
If both FMGECs fail, the crew must use the RMPs to select the frequencies and courses.

FM SWITCHING

Laid out on the pedestal switching panel, there is a manually operated switch called "FM SOURCE". It has 3 positions : NORM, BOTH ON 1 and BOTH ON 2.
Setting the switch to "NORM" position, assuming no MCDU has failed, will validate the normal configuration: MCDU1 works with FM1 and MCDU2 works with FM2.
Setting the switch to BOTH ON 1, enables MCDU1 and MCDU2 to work with the same FM1 source. This also makes the two operative Display Management Computers (DMCs), feeding the EFIS displays, work with the same FM1 source. Setting the switch to BOTH ON 1 will also enable the navaids to be tuned from the same FM1 source.
Setting the switch to BOTH ON 2, enables MCDU1 and MCDU2 to work with the same FM2 source. This also makes the two operative DMCs feeding the two EFIS displays work with the same FM2 source. Setting the switch to BOTH ON 2 will also enable the navaids to be tuned from the same FM2 source.
Note that all the above also applies to MCDU3 when it replaces MCDU1 or 2 switching operation (in case of failure of MCDU1 or 2).
If FM1 has failed, MCDU1 can be switched manually through the "FM SOURCE" selector switch. MCDU1 is switched to work in full capability with FM2, and this, without disturbing the link between FMGEC2 and MCDU2. If FM2 has failed, the same applies but with MCDU2.
As an alternative way and provided the switch is in the "NORM" position, the Back-up Nav function of MCDU1 or 2 can be activated through a specific prompt on the MCDU MENU page, to cover failure of FM1 or 2.

MCDU SWITCHING

Turning the brightness knob of one MCDU to "OFF" permits the MCDU switching. This knob is located on each MCDU front panel.
The way to proceed is the following:
- turning the brightness knob of MCDU1 to "OFF", controls the transfer from MCDU1 (which is blank and inoperative) to MCDU3 of the FM function (normally FM1). If the BRT knob is in the OFF position, the RDY annunciator is lit to indicate the good result of the power-up test.
- turning the brightness knob of MCDU3 to "OFF", makes MCDU3 inoperative and transfer is no longer possible. Note that if both MCDU1 and 2 are turned OFF, the transfer from MCDU1 to MCDU3 will have priority over the one from MCDU2.
If MCDU1 or MCDU2 has failed, MCDU3 must be able to work with FMGEC1 or FMGEC2 in order to replace MCDU1 or MCDU2 for the Flight Management function.
For a dual MCDU1 and 2 failure, MCDU3 has to operate like MCDU1. This reconfiguration does not include the Back-up Nav function, which remains selectable on MCDU1 or 2 only, and not on MCDU3.

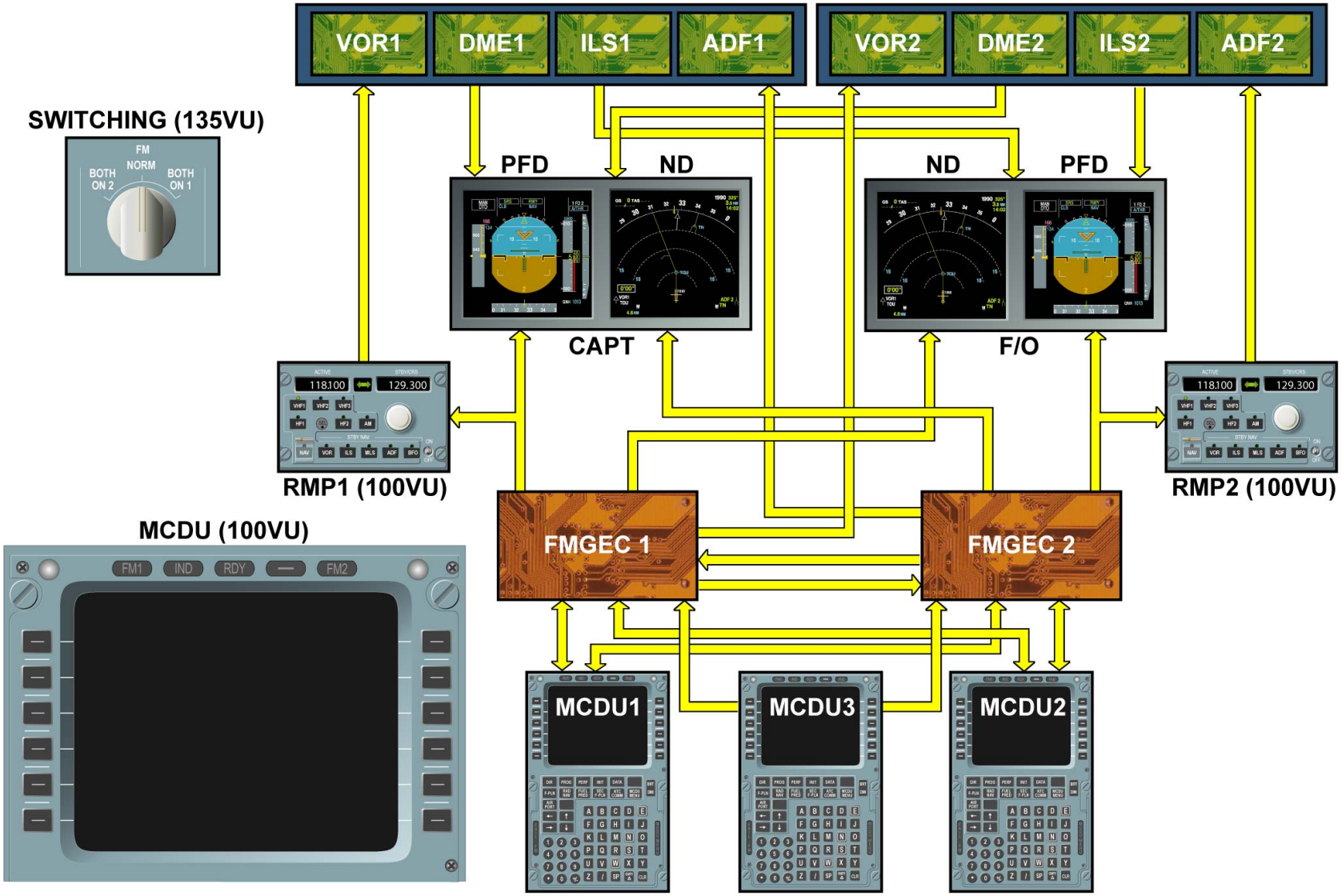

FM OPERATING MODES ... MCDU SWITCHING

G7508471 - G7OT0T0 - FM22D6F22MI0102

This Page Intentionally Left Blank

G7508471 - G7OT0T0 - FM22D6F22MI0102

NAVIGATION BACK-UP D/O (3)

GENERAL

The MCDU BACK-UP NAV (B/UP NAV) must be used as a back-up system when both Flight Management (FM) parts are failed, supplying the crew with limited information, which can be used to complete the current flight.
The MCDU B/UP NAV is activated through the "SELECT NAV B/UP" prompt on the MCDU MENU page. This prompt is available at all times, regardless of the status of FM1 or FM2, provided the FM SOURCE selector is set to the NORM position.
If the FM source selector is moved from the NORM position to one of the other two positions, BACK-UP NAV is deactivated. Finally, there is no interconnection between MCDU1 and MCDU2, so the B/UP NAV functions work independently and may be activated separately.

NOTE: Note that MCDU3 does not have this option, even when it is used to replace MCDU1 or MCDU2.

FLIGHT PLANNING

Before activation of the BACK-UP NAV function, a condensed form of the flight plan is transferred from the FM part to the MCDU. This downloading is updated in case of:
- FM primary F-PLN changes,
- FM lateral leg sequencing,
- FM long power off,
- FM source selector change,
- FM resynchronization.

Downloading includes waypoint position, waypoint identifier, leg type, discontinuity, overfly and turn direction information in a maximum of 150 legs.
At BACK-UP NAV activation, a last updating is performed and then any other updating is ignored. A reduced capability is given to the MCDU B/UP NAV function compared to the FM function.

NAVIGATION

The BACK-UP NAV function is based on Inertial Reference (IR) inputs from the ownside IR or IR3 which provide position, ground speed, track, heading, altitude and wind. The selected IR depends on pilot selection, through the IR source selector, to be consistent with the current displayed IR data on the corresponding PFD and ND. The MCDU B/UP NAV provides, the crosstrack error and the bearing/distance/time to go to the active waypoint, depending on the aircraft latitude/longitude and on the active leg of the flight plan. It supplies the automatic leg change when the TO waypoint is reached.
It is very important to note that all this data is only for display, there is no steering order issued by the MCDU, and the NAV mode cannot be engaged.

ND DISPLAY

The MCDU transmits the BACK-UP F-PLN to the NDs. It consists of active F-PLN vectors and waypoints related to the fixed aircraft position in ROSE or ARC modes, or to the moving aircraft reference in PLAN mode. In all cases, the flight plan line is dashed in green (as NAV mode cannot be engaged). Options selectable on the EFIS control panel are not allowed (WayPoinT, AiRPorT, VOR.D, Non-Directional Beacon, ConSTRaint).

MCDU PAGE AVAILABILITY

All flight planning operations are directly applied through the B/UP F-PLN page. It displays each leg of the active route, providing position information for each waypoint, as well as computed course, time and distance for the connecting legs. The revisions, available on the B/UP F-PLN page, are:
- waypoint insertion,
- waypoint deletion,

- discontinuity deletion,
- overfly deletion/insertion.

Pressing the DIR key enables the selection of a waypoint to join it directly.
The B/UP F-PLN/DIR TO page is similar to the F-PLN page but line 1 is reserved for waypoint entry.
Pressing the PROGress key gives navigation information. The B/UP PROG page displays the aircraft position with identification of the selected IR. It also provides ground speed, active leg track with aircraft track. The top line displays the waypoint identifier and altitude at the last sequenced waypoint, also called overhead (OVHD).
The bottom line enables access to the B/UP IRS pages. The B/UP IRS pages correspond to IR1 or 2, function of MCDU1 or 2, and IR3. IR provides, for display information about position, the true track, the true and magnetic headings, the ground speed and the wind.

DEACTIVATION

When the BACK-UP NAV function is voluntarily left, the return is performed on the MCDU MENU page. DESELECT NAVB/UP prompt must be pressed to return to normal operation.

G7508471 - G7OT0T0 - FM22DAF22MJ0102

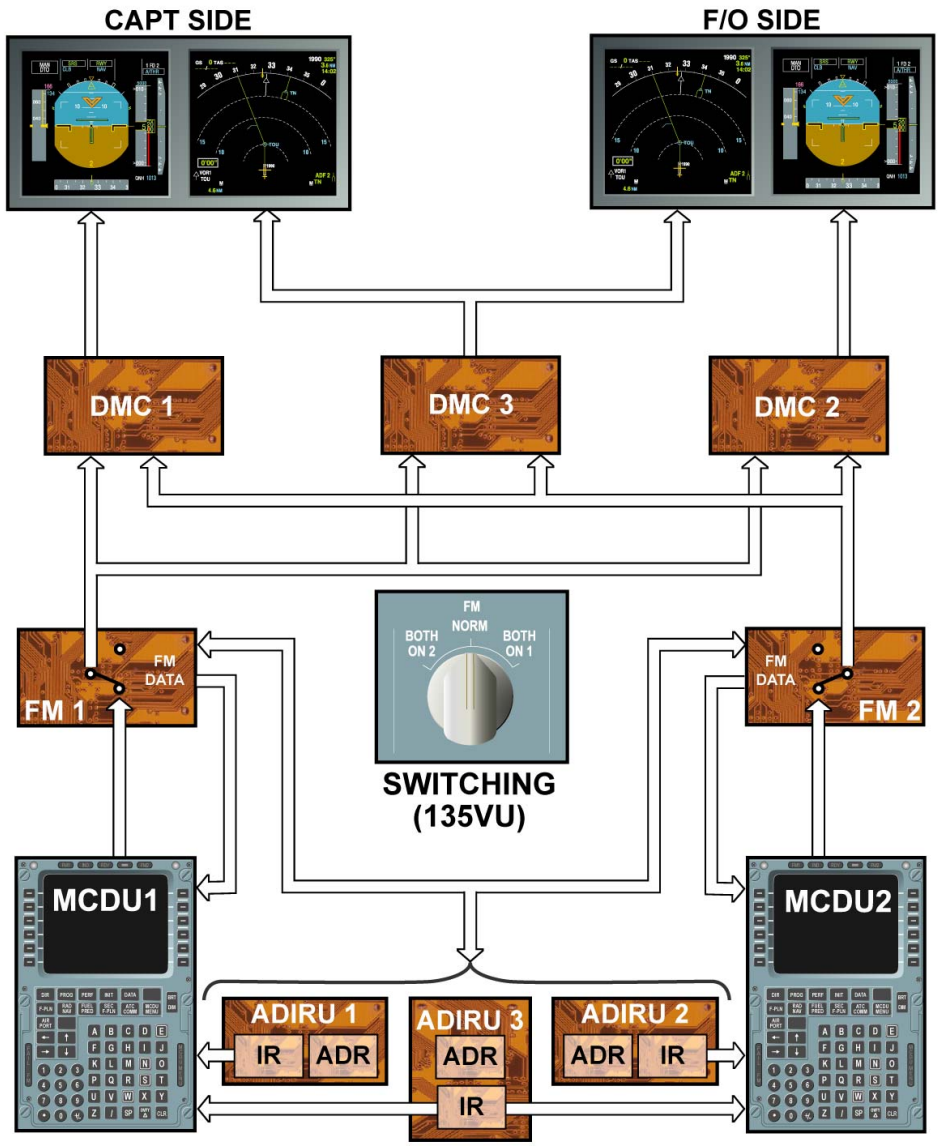

ND

GENERAL ... DEACTIVATION

G7508471 - G7OT0T0 - FM22DAF22MJ0102

This Page Intentionally Left Blank

G7508471 - G7OT0T0 - FM22DAF22MJ0102

POWER INTERRUPTIONS AND POWER UP TESTS D/O (3)

INTERRUPTION < 10 MS

For the Flight Management Guidance and Envelope Computer (FMGEC), Flight Control Unit (FCU) or MCDU, the transparency time may be around 10 ms and these interruptions do not affect the system. The only effect is on the MCDU Cathode Ray Tube (CRT) which will momentarily flash.

10 MS < INTERRUPTION < 200 MS

If interruption is between 10 ms and 200 ms, the cut-off is a short power fail. The FMGEC/FCU/MCDU are recovered after the power interruption. In particular the data displayed on the MCDU and the FCU and the output bus data for all the equipment are recovered after a short power fail without pilot action.

200 MS < INTERRUPTION < 5 Sec

When the interruption is between 200 ms and 5 sec, the cut-off is a long power fail. A complete initialization of the system is performed, indicating that a long power fail occurred. The protection of data stored in the RAMs cannot be longer than 500 ms, except for the FM RAM which is supplied by a 5 V back-up battery (for the FM part, the system status prior to the interruption is stored).

INTERRUPTION > 5 Sec

When interruption is longer than 5 seconds the type of cut-off is a very long power fail. This leads to an automatic reset where, as long as the reset command is held, the computer behaves as not powered or not active. This also leads to safety tests on ground.

NOTE: Note that the FCU retrieves any selected data after an interruption of 5 minutes or less and due to the 5 V back-up battery, the FM retrieves the flight plan data for display on the MCDU whatever the interruption time.

POWER-UP TEST

Power-up tests are performed when the A/C is on the ground, following a power cut longer than 5 seconds. The duration of the tests does not exceed 40 seconds in normal cases. The power-up tests carry out an interface test and an analysis (sent to the Central Maintenance System (CMS)).

G7508471 - G7OT0T0 - FM22D8F22SG0102

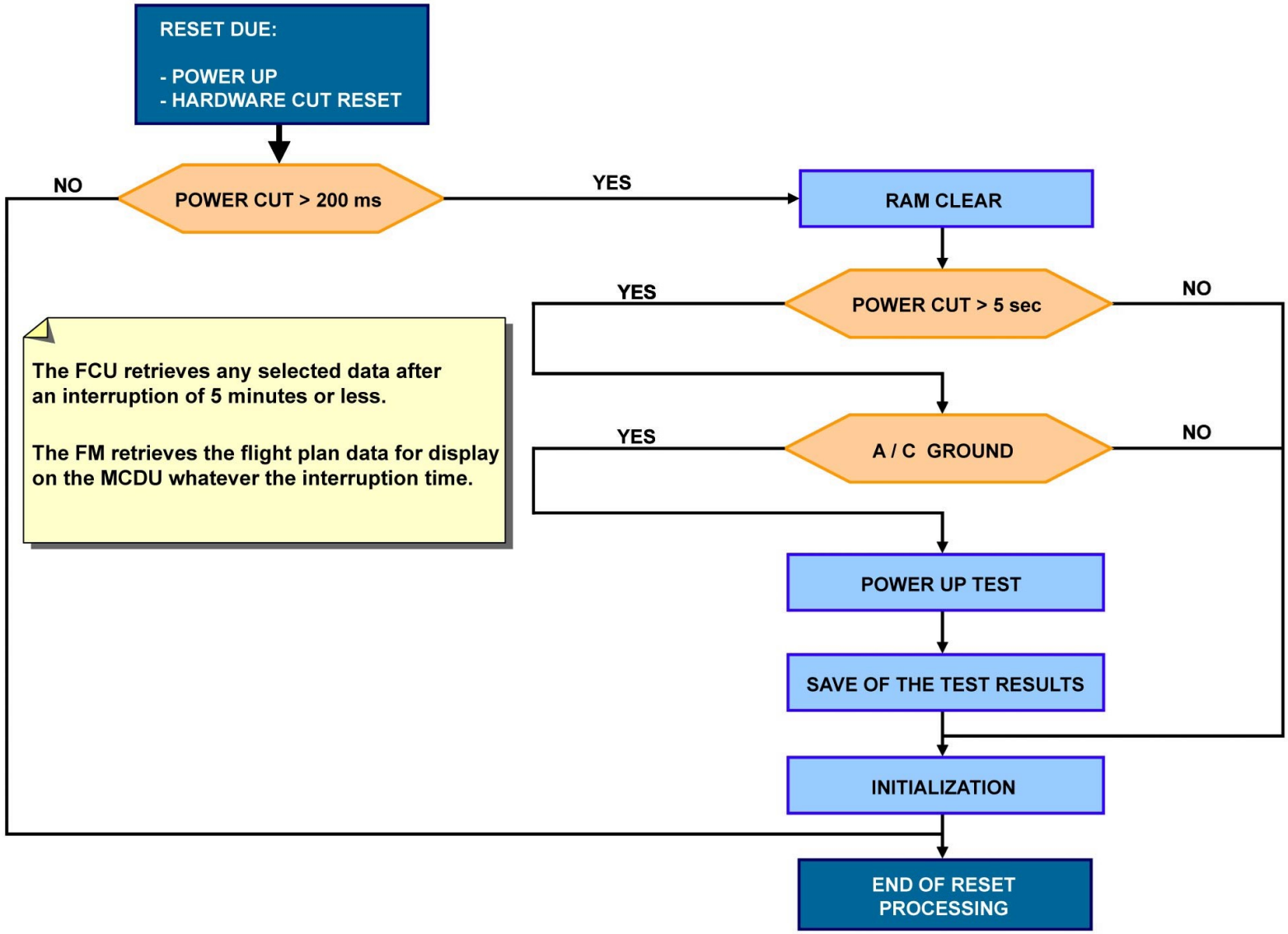

INTERRUPTION < 10 MS ... POWER-UP TEST

G7508471 - G7OT0T0 - FM22D8F22SG0102

POWER INTERRUPTIONS AND POWER UP TESTS D/O (3)

FM POWER-UP TEST

Following a reset or a transient reset greater than the transparency time of 10 ms, the FM part executes specific internal tests called power-up test. It verifies minimum FM hardware integrity and proper initialization. The total execution time of this test is less than 2 seconds.

FCU POWER-UP TEST

The FCU power-up test has to be performed to confirm system availability and is initiated automatically on the channels concerned (B/power supply 1, C/power supply 2) when the following conditions are met:
- Aircraft On Ground,
- restoration of electrical power after a power cut-off longer than 5 seconds.

The duration of this test is approximately 90 s.

NOTE: Note that at this moment, the Flight Director (FD) P/B lights come on but the FD function is not yet available.

On initialization, the FCU returns to a neutral configuration. The flashing of AP1, AP2 and A/THR P/Bs proves the success of the internal tests. The FD is finally engaged and the FD red flag removed from the PFDs when the Inertial Reference (IR) system providing the position has been correctly initialized with a delay of 10 minutes and when the present position is entered.
FD status is indicated on the Flight Mode Annunciator (FMA). The altitude, by default 100 feet, is displayed on the FCU. The altitude mode is automatically armed and displayed on the FMA.

NOTE: If FCU fails, FMA data on PFDs are lost and on the Enhanced GPWS panel FAULT light comes on on the SYStem P/B, due to the loss of the QNH barometric reference.

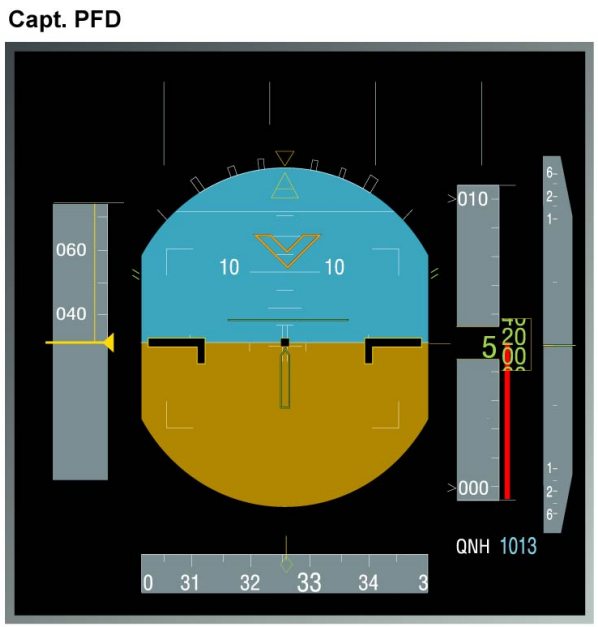

(221VU)

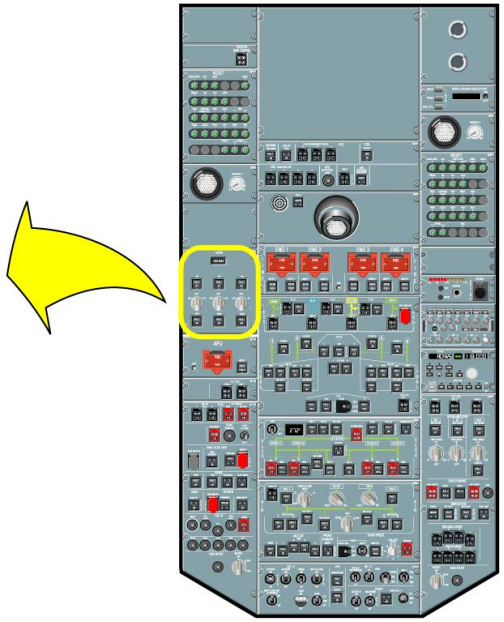

LEFT ECP
(742VU)

FCU
(722VU)

RIGHT ECP
(742VU)

FM POWER-UP TEST & FCU POWER-UP TEST

G7508471 - G7OT0T0 - FM22D8F22SG0102

POWER INTERRUPTIONS AND POWER UP TESTS D/O (3)

MCDU POWER-UP TEST

After a long-term interruption or the movement of the brightness knob from the ON to OFF position, the MCDU extinguishes all annunciators and performs its power-up self test.

G7508471 - G7OT0T0 - FM22D8F22SG0102

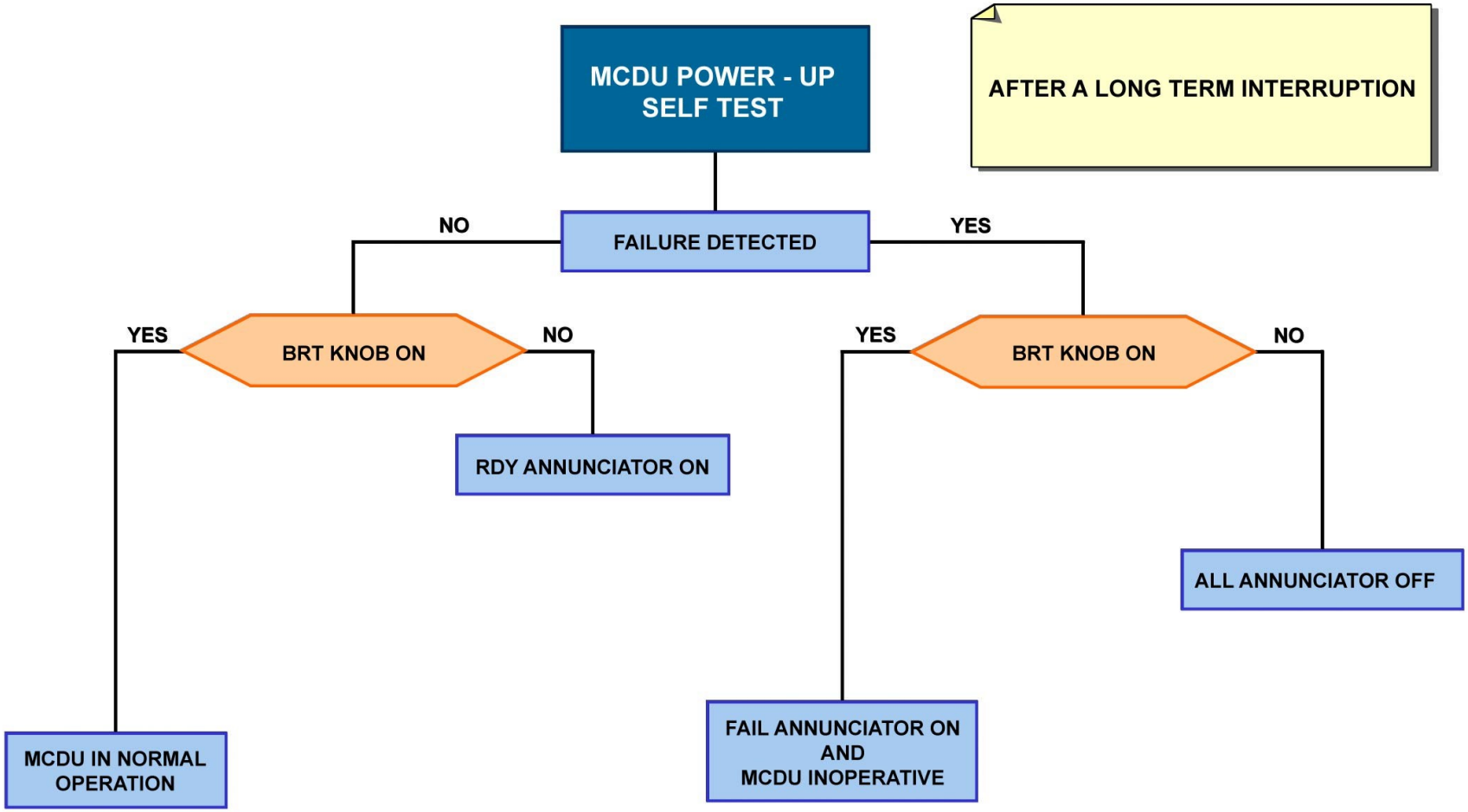

MCDU POWER-UP TEST

G7508471 - G7OT0T0 - FM22D8F22SG0102

POWER INTERRUPTIONS AND POWER UP TESTS D/O (3)

MANUAL RESETS

The reset function is available in the cockpit on the overhead panel. The FM reset SW resets only the FM part. The FMGEC reset SW resets all the FG, FE and FM parts.
Safety test will be run if the aircraft is on ground with engines stopped. In flight, the FM or FMGEC reset SW reset leads to the disconnection of the ownside autopilot (if it was engaged) with the resynchronization of both FMs. The MCDUs are reset by the brightness knob (ON/OFF).
A complete FCU reset is performed by pulling the FCU reset SW longer than 5 min.
The RESET is activated by sending a ground signal to the computer or the function. When the RESET state is confirmed and as long as the RESET command is held, the computer behaves as not powered or not active. The operational functioning of the computer is active when the control signal is back to the NO RESET state.

G7508471 - G7OT0T0 - FM22D8F22SG0102

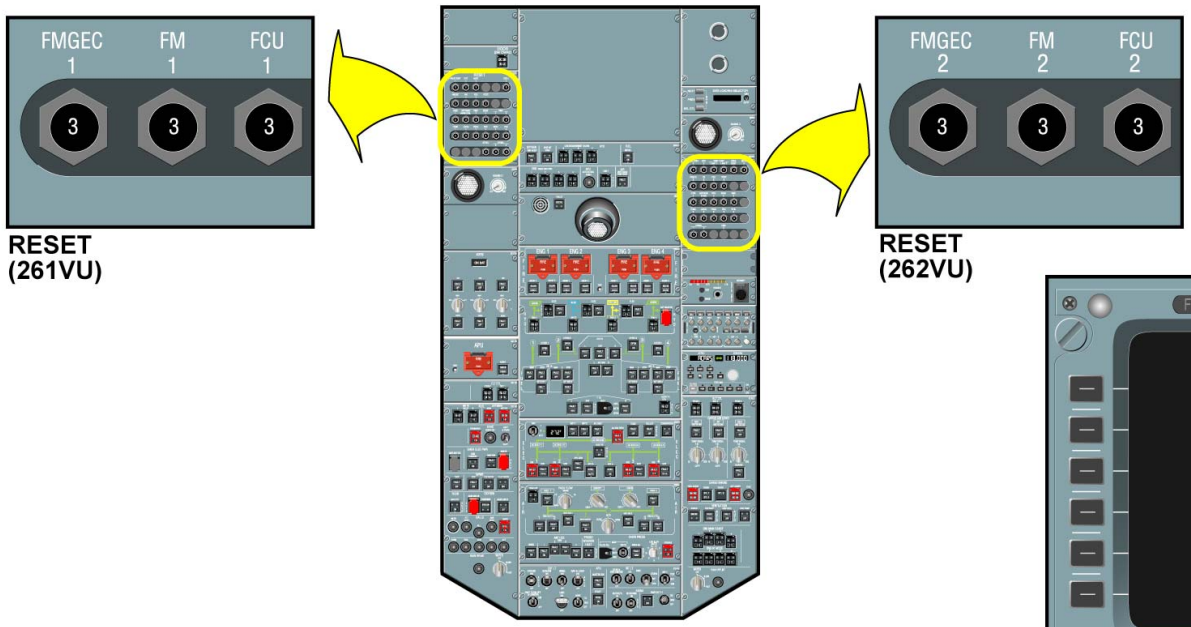

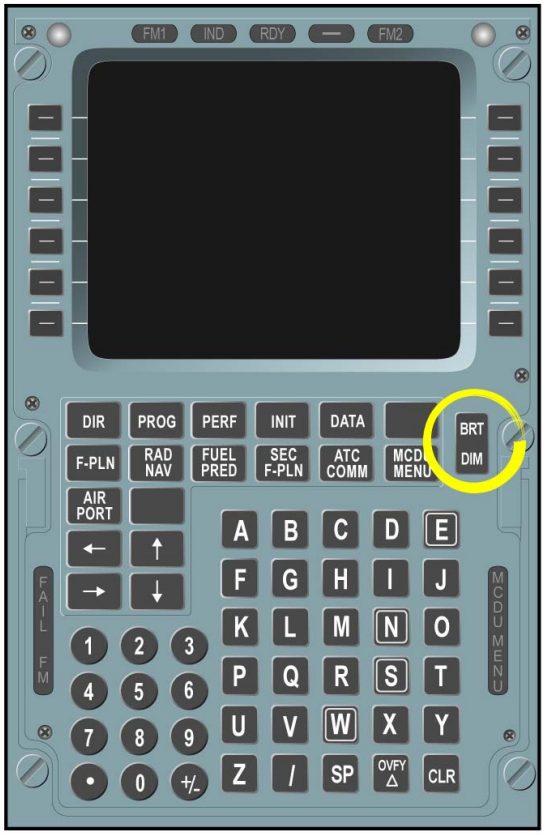

Safety test will be run if aircraft is on ground and engines stopped.

The RESET is activated by sending a ground signal to the computer or the function.

MANUAL RESETS

AUTO FLIGHT SYSTEM BASE MAINTENANCE (3)

INTRODUCTION

This module provides information related to the Auto Flight System (AFS) line maintenance. There is only one task to ensure it: the LAND CATegory (CAT) III capability test. The test of the LAND CAT III capability allows a check of the CAT III Flight Management and Guidance Envelope Computers (FMGECs) to perform a CAT III fail-operational automatic landing. Moreover, it ensures that the required information is correctly displayed. It is also used for the checking of the takeover pushbutton switches, the Autothrust (A/THR) instinctive disconnect pushbutton switches and the warnings related to the automatic landing of non-monitored system items.
The Fault Isolation and Detection System (FIDS) ensures the LAND CAT III test functionality and the Central Maintenance System (CMS) interface. It takes advantage of the Flight Guidance (FG) BITE for failure detection and reporting. This is the reason why the LAND CAT III test can be done on ground, engines stopped, without any specific tool via an interactive dialog between the operator and the MCDU.

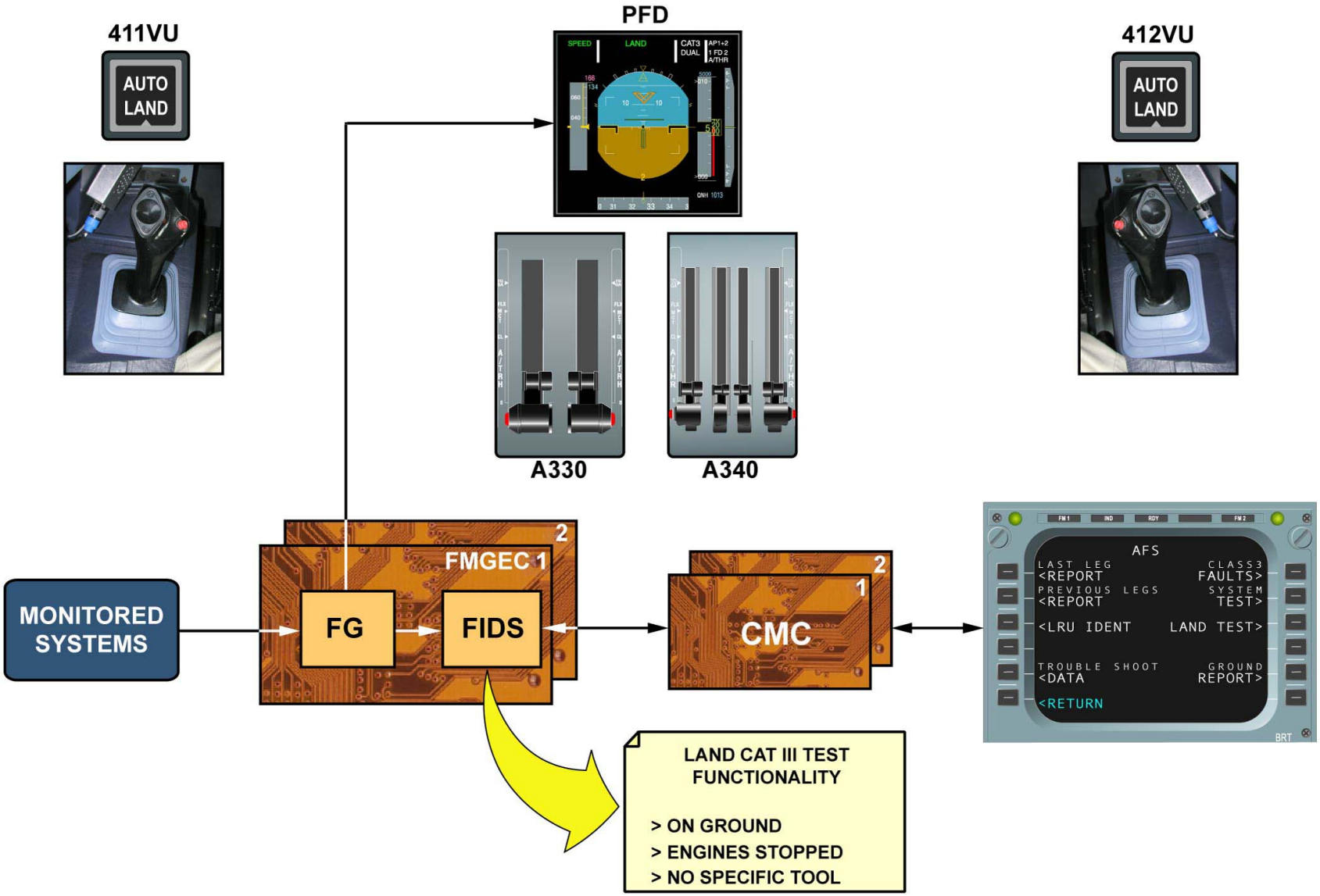

INTRODUCTION

AUTO FLIGHT SYSTEM BASE MAINTENANCE (3)

TEST OF THE LAND CAT III CAPABILITY

The LAND CAT III capability test is accessible from the AFS menu page.
After selection of the LAND TEST indication, initial conditions necessary to get FG functions available are displayed to the operator.

CAUTION: Caution: the hydraulic systems are pressurized during the test, the flight control surfaces could move.

NOTE: The LAND TEST can be stopped at any time by pressing the line key adjacent to the RETURN indication.
In that case, the TEST CLOSE UP page is displayed in order to end the test correctly, before returning to the AFS main menu page.

To activate the test, the operator has to select the START TEST indication and confirm his selection through the CONFIRM START OF TEST prompt.
Upon the last selection, the FIDS interrogates the Command and Monitoring FG BITE functions of both FMGECs.
The 4 BITE compute theirs own response called the LAND TEST ACCEPTATION.
If at least one LAND TEST ACCEPTATION is not received, the LAND TEST failure report is displayed.
In case of non-acceptation, the TEST CLOSE-UP page is displayed.
If the FIDS receives the 4 LAND TEST ACCEPTATION from the FG BITE, the LAND TEST is accepted and two additional pages of initial conditions are then displayed.
The next page requests the operator to check the operational status of the AFS.
Then, throughout the test instructions and results are provided to the operator through the MCDU pages. This guided test requests also the operator to check the FG ability to determine and display on the PFD, the engagement status of each FG function and their related operating mode, as well as the landing capability corresponding to the FMGEC monitored aircraft system current configuration. The first two pages request the operator to engage all the FG functions and their related common approach mode. As a result, the full landing capability (CAT 3 DUAL) must be displayed on the PFD Flight Mode Annunciator (FMA).
The next two pages request the operator to disengage one of the computers monitored by the FMGEC for the computation of the landing capability, in order to check the resulting FG computed landing capability degradation and the associated aural warning (triple click).
Two additional pages allow the operator to check the A/THR INST DISC P/B correct operations and the resulting landing capability degradations.
The last page requests the operator to ensure that the sidestick TAKE OVER P/B operates correctly and that the related aural and visual warnings are correctly provided to the crew (cavalry charge and autoland warning lights).

NOTE: Note that as a general rule, the principle is to trigger an FG BITE analysis each time the operator has pushed the NO indication and then to build a report called LAND TEST failure report.

Otherwise, the selection of the YES indication validates the current check allowing the access to the next procedure step. At the end of the test, the TEST OK indication comes on.
Finally, the operator has to complete the CLOSE-UP procedure in order to end the test correctly before returning to the AFS main menu page.
The LAND TEST has been completed, and the level of redundancy of the major automated systems and of the required PFD displayed information is achieved for a fail-operational automatic landing. However, this does not mean that the aircraft status allows the associated operation in low weather minima condition. Remember that some cockpit systems, like wipers, stand-by attitude indicator, etc., cannot be monitored by the FMGES. In such a case, the pilot should ensure the monitoring.

Test of the LAND CAT III capability

...
Job set-up
...
Procedure
...

BITE test of the LAND CAT III

...
Close-up
...

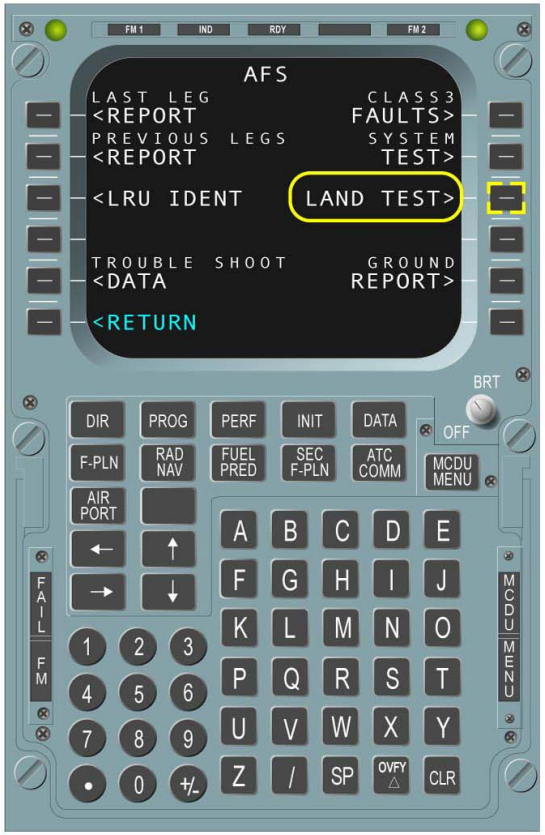

TEST OF THE LAND CAT III CAPABILITY

Test of the LAND CAT III capability

...

Job set-up

...

Procedure

...

BITE test of the LAND CAT III

...

During the AFS LAND TEST, obey the instructions shown on the MCDU.

Note: When you think it is necessary to stop the LAND TEST:

-push the line key adjacent to the RETURN indication.

The AFS/LAND TEST/TEST CLOSE-UP page comes into view.

-perform the TEST CLOSE-UP recommendations.

Then push again the line key adjacent to the RETURN indication; do this until the AFS page comes into view....

The AMM necessary procedures are to do the applicable INITIAL CONDITIONS.

-Align the three ADIRUs.

-Pressurized the aircraft hydraulic systems (use the electric pumps).

-On the maintenance panel 285 VU, push the ENG GND PWR pushbutton switches (the ON legend comes on).

-On the overhead control panels 212 VU and 241 VU, push the FLT CTL PRIM & SEC pushbutton switches (no legend comes on).

-Set the ILS FREQ/CRS to 109.9/060 on another MCDU.

If no ILS frequency is shown, enter 109.9 into the scrathpad.

Push the line key adjacent to the ILS/CRS.

ACTION	RESULT
1. ...	The AFS ...
2.On the AFS page: - Push the line key adjacent to the LAND TEST indication.	The AFS/LAND TEST page comes into view.
3.Do the INITIAL CONDITIONS operations that are necessary.	The subsequent AFS/LAND TEST page comes into view.
...	...

...

Close-up

...

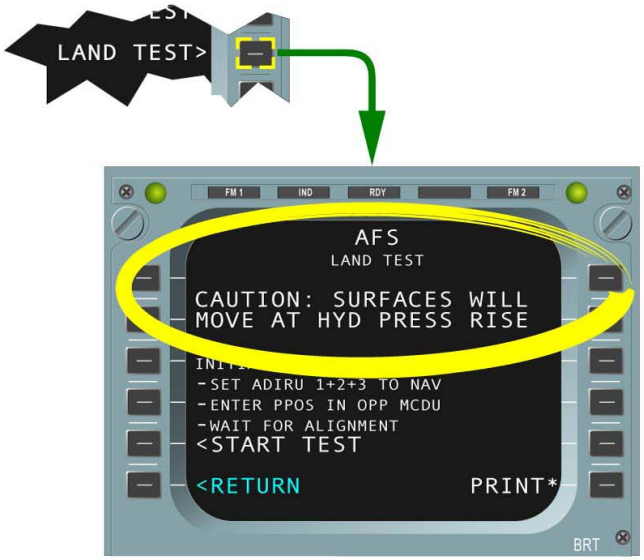

TEST OF THE LAND CAT III CAPABILITY

Test of the LAND CAT III capability

...

Job set-up

...

Procedure

...

BITE test of the LAND CAT III

...

During the AFS LAND TEST, obey the instructions shown on the MCDU.

Note: When you think it is necessary to stop the LAND TEST:

-push the line key adjacent to the RETURN indication.

The AFS/LAND TEST/TEST CLOSE-UP page comes into view.

-perform the TEST CLOSE-UP recommendations.

Then push again the line key adjacent to the RETURN indication; do this until the AFS page comes into view....

The AMM necessary procedures are to do the applicable INITIAL CONDITIONS.

-Align the three ADIRUs.

-Pressurized the aircraft hydraulic systems (use the electric pumps).

-On the maintenance panel 285 VU, push the ENG GND PWR pushbutton switches (the ON legend comes on).

-On the overhead control panels 212 VU and 241 VU, push the FLT CTL PRIM & SEC pushbutton switches (no legend comes on).

-Set the ILS FREQ/CRS to 109.9/060 on another MCDU.

If no ILS frequency is shown, enter 109.9 into the scrathpad.

Push the line key adjacent to the ILS/CRS.

ACTION	RESULT
1. ...	The AFS ...
2.On the AFS page: - Push the line key adjacent to the LAND TEST indication.	The AFS/LAND TEST page comes into view.
3.Do the INITIAL CONDITIONS operations that are necessary.	The subsequent AFS/LAND TEST page comes into view.
...	...

...

Close-up

...

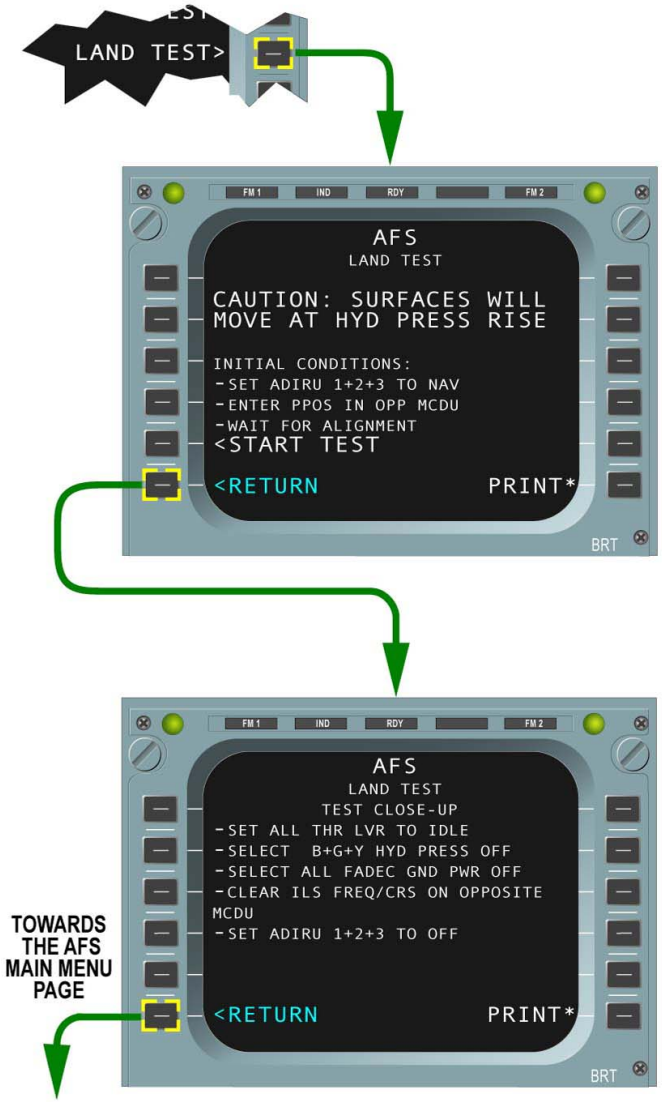

TEST OF THE LAND CAT III CAPABILITY

G7508471 - G7OT0T0 - FM22Y3BASEMCE01

Test of the LAND CAT III capability

...
Job set-up
...
Procedure
...

BITE test of the LAND CAT III
...
During the AFS LAND TEST...
...
The AMM necessary procedures are to do ...

ACTION	RESULT
3.Do the INITIAL CONDITIONS operations that are necessary.	The subsequent AFS/LAND TEST page comes into view.
Push the line key adjacent to the START TEST indication.	
4.Push the line key adjacent to the CONFIRM START OF TEST indication.	The subsequent AFS/LAND TEST page comes into wiew.
...	...

...
Close-up
...

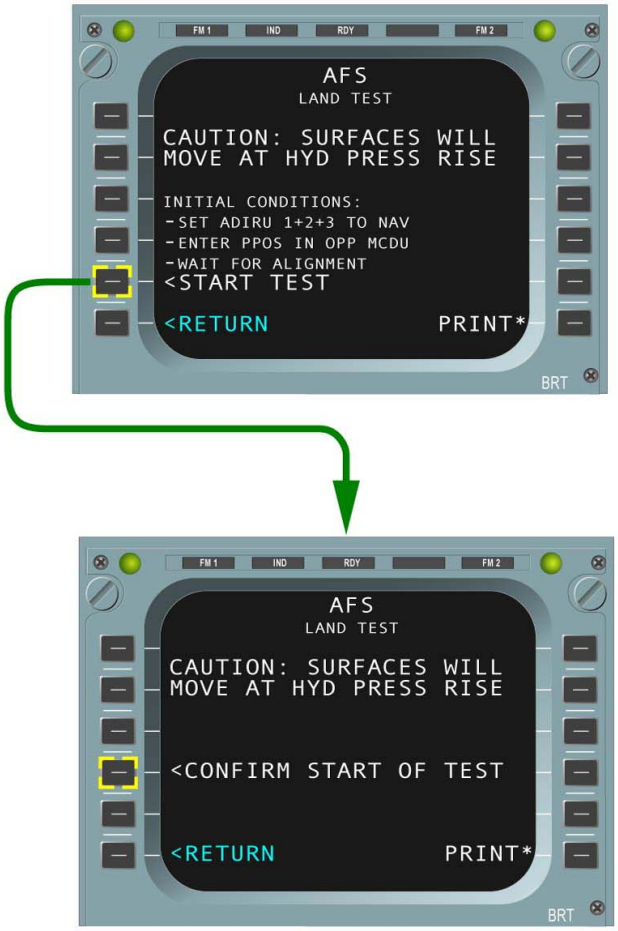

TEST OF THE LAND CAT III CAPABILITY

Test of the LAND CAT III capability

...
Job set-up
...
Procedure
...

BITE test of the LAND CAT III
...
During the AFS LAND TEST...
...
The AMM necessary procedures are to do ...

ACTION	RESULT
3.Do the INITIAL CONDITIONS operations that are necessary.	The subsequent AFS/LAND TEST page comes into view.
Push the line key adjacent to the START TEST indication.	
4.Push the line key adjacent to the CONFIRM START OF TEST indication.	The subsequent AFS/LAND TEST page comes into wiew.
...	...

...
Close-up
...

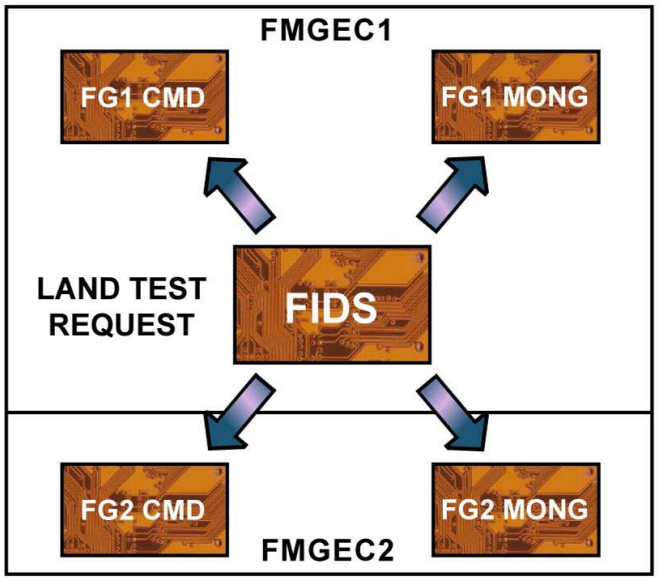

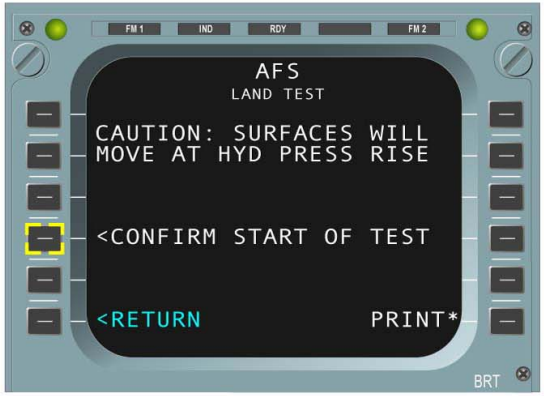

TEST OF THE LAND CAT III CAPABILITY

Test of the LAND CAT III capability

...
Job set-up
...
Procedure
...

BITE test of the LAND CAT III
...
During the AFS LAND TEST...
...
The AMM necessary procedures are to do ...

ACTION	RESULT
3.Do the INITIAL CONDITIONS operations that are necessary.	The subsequent AFS/LAND TEST page comes into view.
Push the line key adjacent to the START TEST indication.	
4.Push the line key adjacent to the CONFIRM START OF TEST indication.	The subsequent AFS/LAND TEST page comes into wiew.
...	...

...
Close-up
...

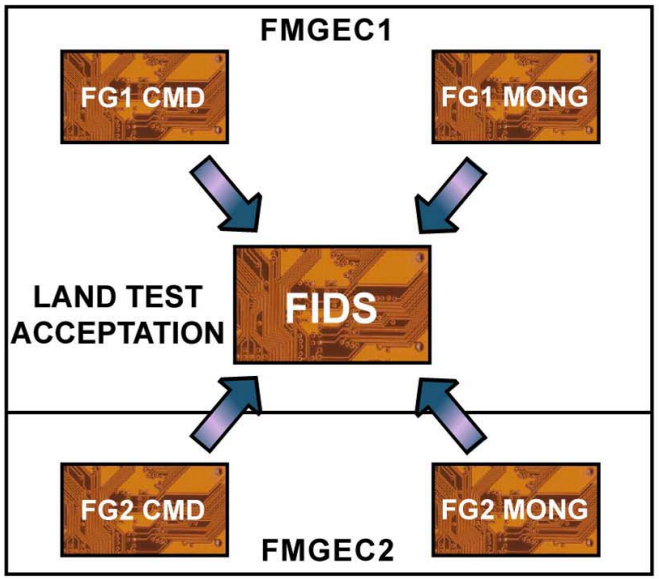

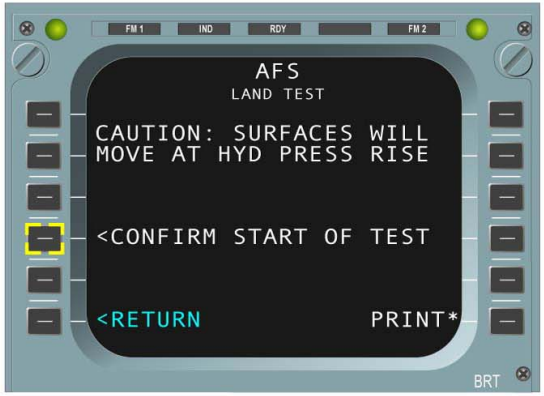

TEST OF THE LAND CAT III CAPABILITY

Test of the LAND CAT III capability

...
Job set-up
...
Procedure
...

BITE test of the LAND CAT III
...
During the AFS LAND TEST...
...
The AMM necessary procedures are to do ...

ACTION	RESULT
3.Do the INITIAL CONDITIONS operations that are necessary.	The subsequent AFS/LAND TEST page comes into view.
Push the line key adjacent to the START TEST indication.	
4.Push the line key adjacent to the CONFIRM START OF TEST indication.	The subsequent AFS/LAND TEST page comes into wiew.
...	...

...
Close-up
...

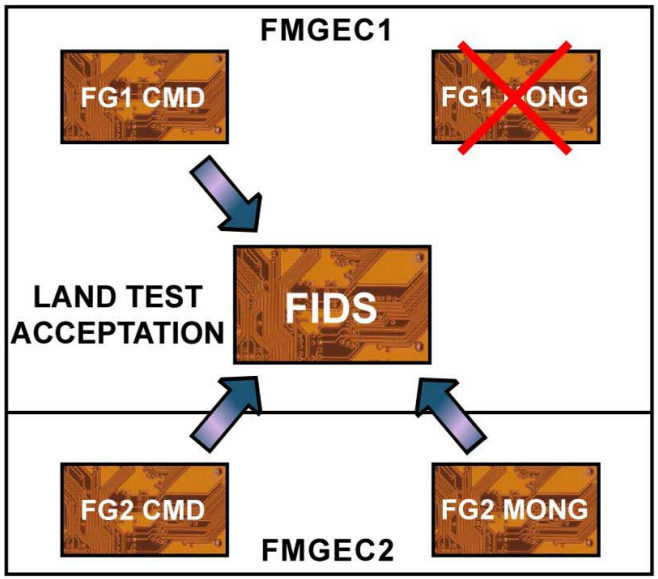

AFS LAND TEST FAILURE REPORT PAGE

TEST OF THE LAND CAT III CAPABILITY

G7508471 - G7OT0T0 - FM22Y3BASEMCE01

Test of the LAND CAT III capability

...
Job set-up
...
Procedure
...

BITE test of the LAND CAT III
...
During the AFS LAND TEST...
...
The AMM necessary procedures are to do ...

ACTION	RESULT
3.Do the INITIAL CONDITIONS operations that are necessary.	The subsequent AFS/LAND TEST page comes into view.
Push the line key adjacent to the START TEST indication.	
4.Push the line key adjacent to the CONFIRM START OF TEST indication.	The subsequent AFS/LAND TEST page comes into wiew.
...	...

...
Close-up
...

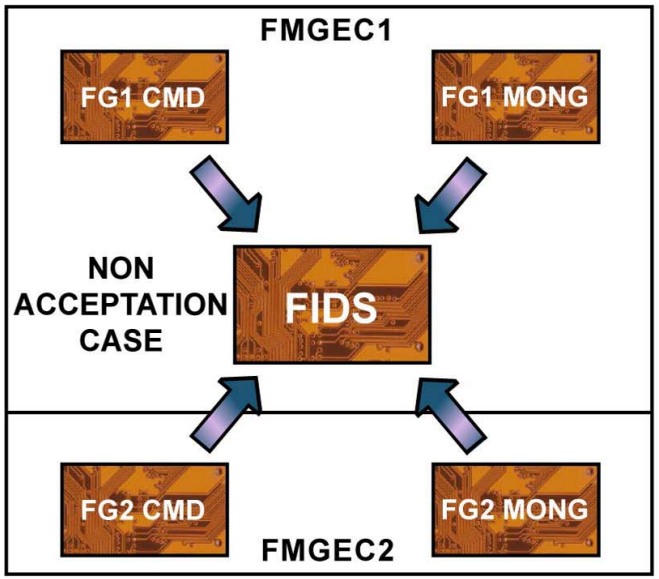

AFS LAND TEST CLOSE UP PAGE

TEST OF THE LAND CAT III CAPABILITY

G7508471 - G7OT0T0 - FM22Y3BASEMCE01

Test of the LAND CAT III capability

...
✓ **Job set-up**
...
Procedure
...

BITE test of the LAND CAT III
...
✓ During the AFS LAND TEST...
...
✓ The AMM necessary procedures are to do ...

ACTION	RESULT
✓ 4. Push the line key adjacent to the CONFIRM START OF TEST indication.	The subsequent AFS/LAND TEST page comes into wiew.
5. Do the aural and visual checks that are necessary.	
Push the line key adjacent to the YES or NO indication during all AFS/LAND TEST:	
-If YES, you continue the sequence of all the AFS/LAND TEST pages.	On the last AFS/LAND TEST TEST OK comes into view.
-If NO	The TEST IN PROGRESS indication comes into view; then the BITE message page of the LAND TEST comes into view.
...	...

...
Close-up
...

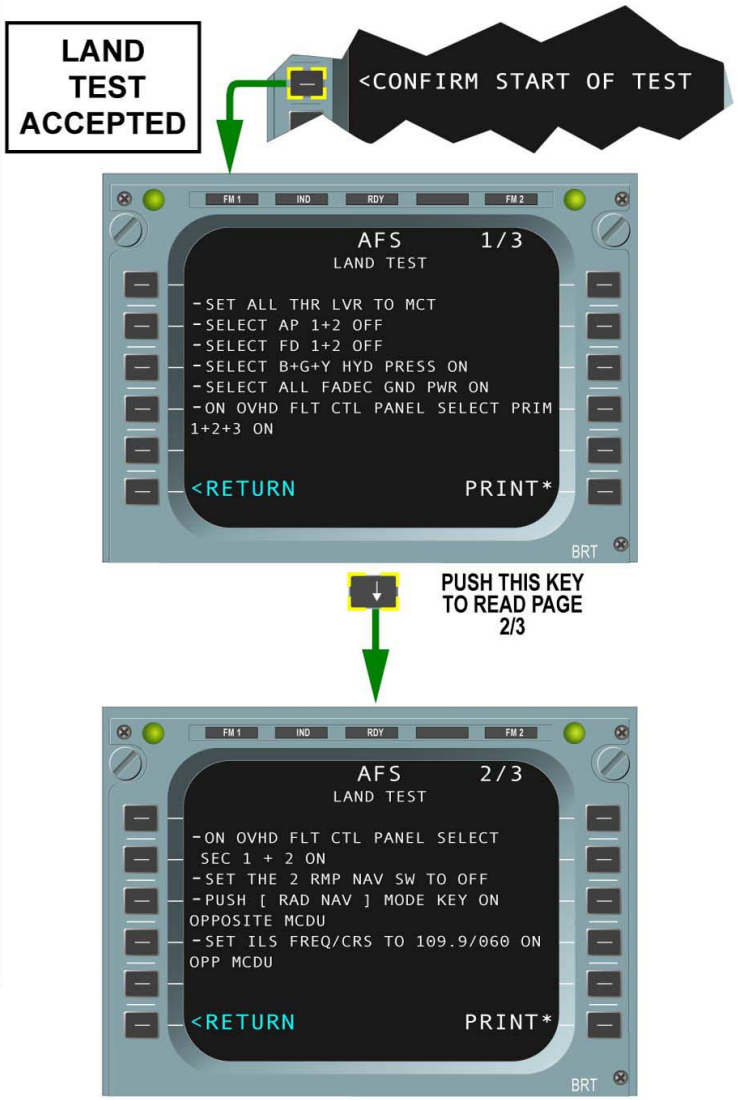

TEST OF THE LAND CAT III CAPABILITY

G7508471 - G7OT0T0 - FM22Y3BASEMCE01

Test of the LAND CAT III capability

...
Job set-up
...
Procedure
...

BITE test of the LAND CAT III
...
During the AFS LAND TEST...
...
The AMM necessary procedures are to do ...

ACTION	RESULT
4. Push the line key adjacent to the CONFIRM START OF TEST indication.	The subsequent AFS/LAND TEST page comes into wiew.
5. Do the aural and visual checks that are necessary.	
Push the line key adjacent to the YES or NO indication during all AFS/LAND TEST:	
-If YES, you continue the sequence of all the AFS/LAND TEST pages.	On the last AFS/LAND TEST TEST OK comes into view.
-If NO	The TEST IN PROGRESS indication comes into view; then the BITE message page of the LAND TEST comes into view.
...	...

...
Close-up
...

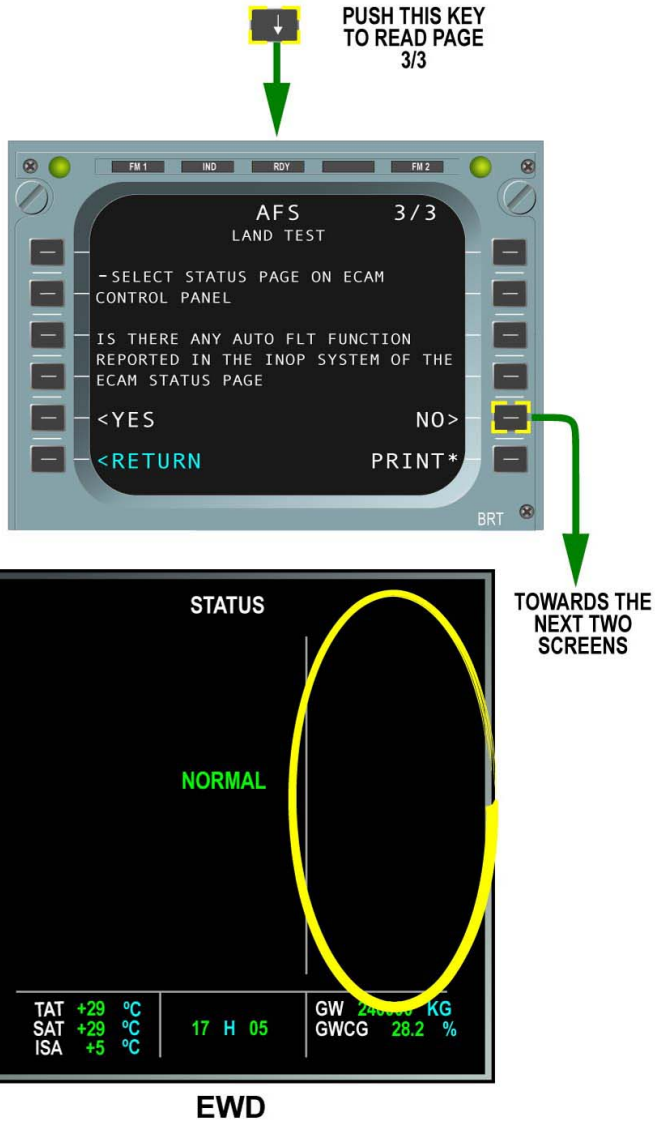

TEST OF THE LAND CAT III CAPABILITY

Test of the LAND CAT III capability

...
Job set-up
...
Procedure
...

BITE test of the LAND CAT III
...
During the AFS LAND TEST...
...
The AMM necessary procedures are to do ...

ACTION	RESULT
4. Push the line key adjacent to the CONFIRM START OF TEST indication.	The subsequent AFS/LAND TEST page comes into wiew.
5. Do the aural and visual checks that are necessary.	
Push the line key adjacent to the YES or NO indication during all AFS/LAND TEST:	
-If YES, you continue the sequence of all the AFS/LAND TEST pages.	On the last AFS/LAND TEST TEST OK comes into view.
-If NO	The TEST IN PROGRESS indication comes into view; then the BITE message page of the LAND TEST comes into view.
...	...

...
Close-up
...

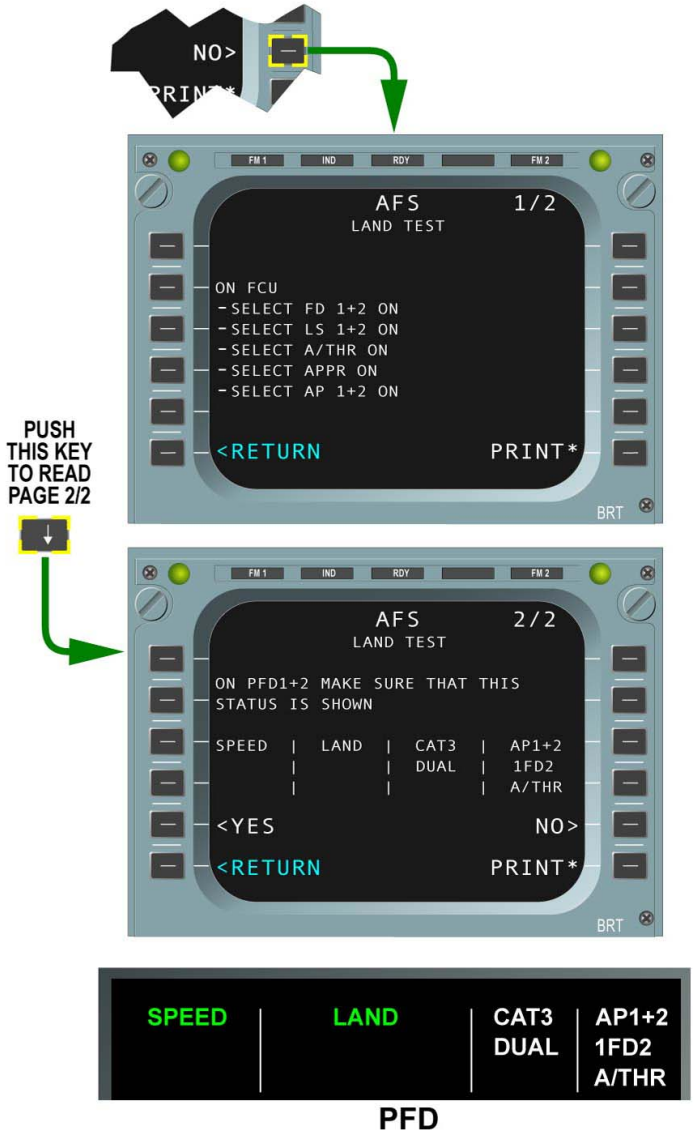

TEST OF THE LAND CAT III CAPABILITY

Test of the LAND CAT III capability

...
Job set-up
...
Procedure
...

BITE test of the LAND CAT III
...
During the AFS LAND TEST...
...
The AMM necessary procedures are to do ...

ACTION	RESULT
4. Push the line key adjacent to the CONFIRM START OF TEST indication.	The subsequent AFS/LAND TEST page comes into wiew.
5. Do the aural and visual checks that are necessary.	
Push the line key adjacent to the YES or NO indication during all AFS/LAND TEST:	
-If YES, you continue the sequence of all the AFS/LAND TEST pages.	On the last AFS/LAND TEST TEST OK comes into view.
-If NO	The TEST IN PROGRESS indication comes into view; then the BITE message page of the LAND TEST comes into view.
...	...

...
Close-up
...

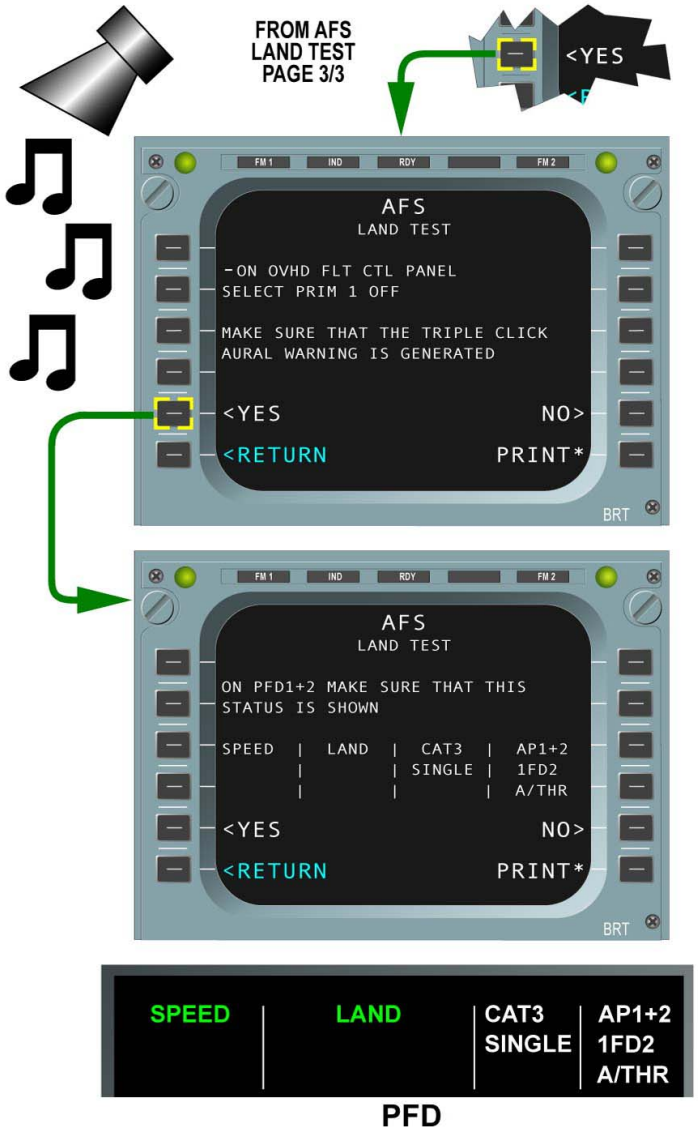

TEST OF THE LAND CAT III CAPABILITY

Test of the LAND CAT III capability

...
Job set-up
...
Procedure
...

BITE test of the LAND CAT III
...
During the AFS LAND TEST...
...
The AMM necessary procedures are to do ...

ACTION	RESULT
4. Push the line key adjacent to the CONFIRM START OF TEST indication.	The subsequent AFS/LAND TEST page comes into wiew.
5. Do the aural and visual checks that are necessary.	
Push the line key adjacent to the YES or NO indication during all AFS/LAND TEST:	
-If YES, you continue the sequence of all the AFS/LAND TEST pages.	On the last AFS/LAND TEST TEST OK comes into view.
-If NO	The TEST IN PROGRESS indication comes into view; then the BITE message page of the LAND TEST comes into view.
...	...

...
Close-up
...

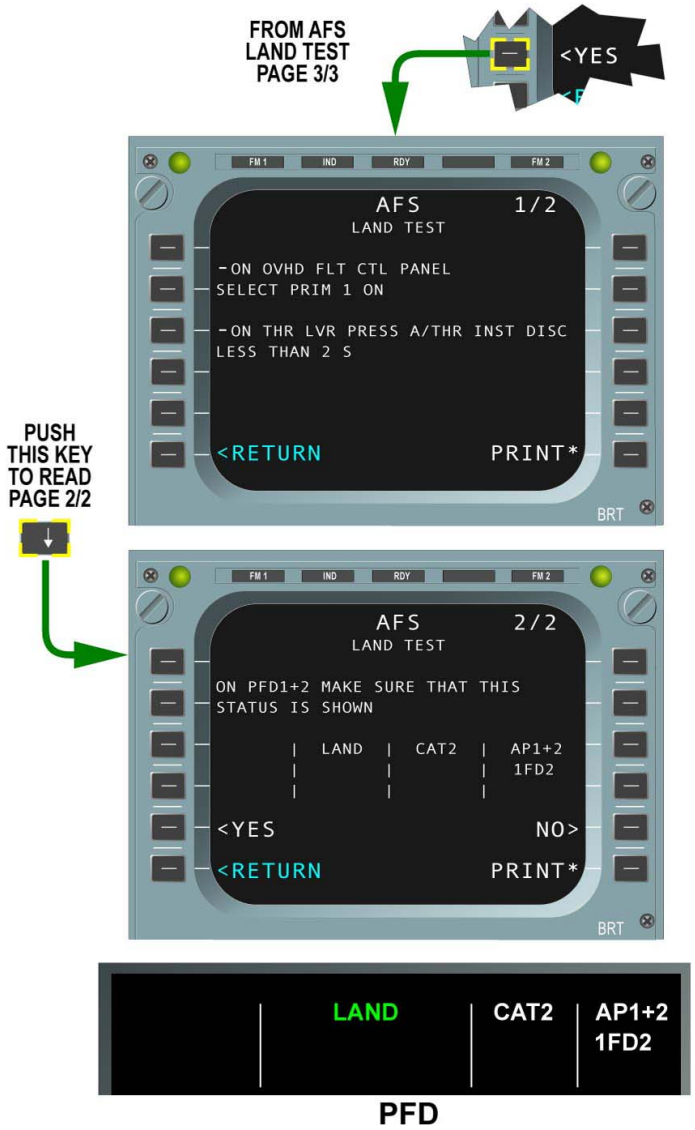

TEST OF THE LAND CAT III CAPABILITY

Test of the LAND CAT III capability

...
✓ **Job set-up**
...
Procedure
...

⇨ **BITE test of the LAND CAT III**
...
✓ During the AFS LAND TEST...
...
✓ The AMM necessary procedures are to do ...

ACTION	RESULT
✓ 4. Push the line key adjacent to the CONFIRM START OF TEST indication.	The subsequent AFS/LAND TEST page comes into wiew.
⇨ 5. Do the aural and visual checks that are necessary.	
Push the line key adjacent to the YES or NO indication during all AFS/LAND TEST:	
-If YES, you continue the sequence of all the AFS/LAND TEST pages.	On the last AFS/LAND TEST TEST OK comes into view.
-If NO	The TEST IN PROGRESS indication comes into view; then the BITE message page of the LAND TEST comes into view.
...	...

...
Close-up
...

TEST OF THE LAND CAT III CAPABILITY

Test of the LAND CAT III capability

...
Job set-up
...
Procedure
...

BITE test of the LAND CAT III
...
During the AFS LAND TEST...
...
The AMM necessary procedures are to do ...

ACTION	RESULT
4. Push the line key adjacent to the CONFIRM START OF TEST indication.	The subsequent AFS/LAND TEST page comes into wiew.
5. Do the aural and visual checks that are necessary.	
Push the line key adjacent to the YES or NO indication during all AFS/LAND TEST:	
-If YES, you continue the sequence of all the AFS/LAND TEST pages.	On the last AFS/LAND TEST TEST OK comes into view.
-If NO	The TEST IN PROGRESS indication comes into view; then the BITE message page of the LAND TEST comes into view.
...	...

...
Close-up
...

WHATEVER THE CHECK

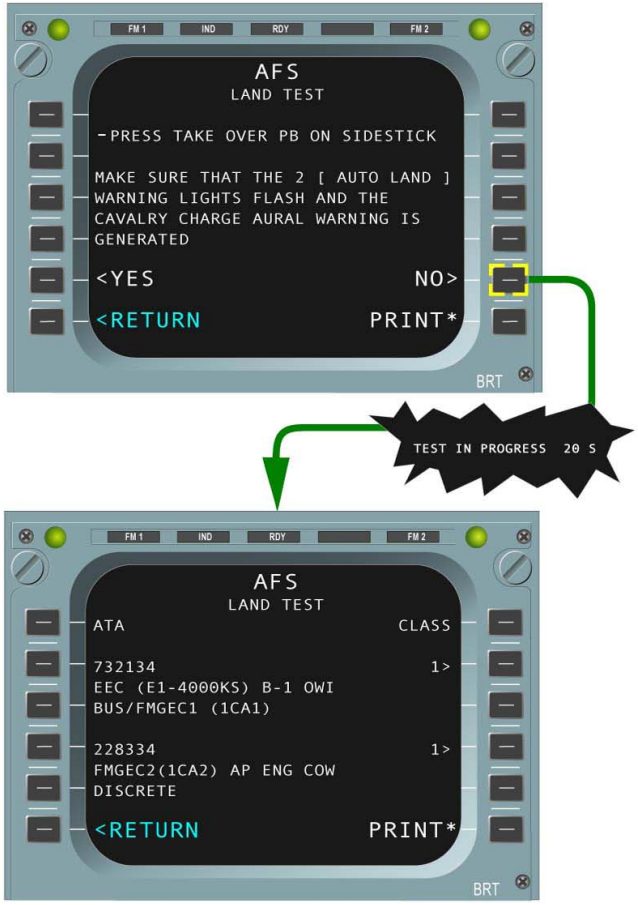

LAND TEST FAILURE REPORT

TEST OF THE LAND CAT III CAPABILITY

Test of the LAND CAT III capability

...
Job set-up
...
Procedure
...

BITE test of the LAND CAT III
...
During the AFS LAND TEST...
...
The AMM necessary procedures are to do ...

ACTION	RESULT
4. Push the line key adjacent to the CONFIRM START OF TEST indication.	The subsequent AFS/LAND TEST page comes into wiew.
5. Do the aural and visual checks that are necessary.	
Push the line key adjacent to the YES or NO indication during all AFS/LAND TEST:	
-If YES, you continue the sequence of all the AFS/LAND TEST pages.	On the last AFS/LAND TEST TEST OK comes into view.
-If NO	The TEST IN PROGRESS indication comes into view; then the BITE message page of the LAND TEST comes into view.
...	...

...
Close-up
...

OTHERWISE

TOWARDS THE CLOSE UP PAGE

TEST OF THE LAND CAT III CAPABILITY

Test of the LAND CAT III capability

...
✓ **Job set-up**
...
Procedure
...

BITE test of the LAND CAT III
...
✓ During the AFS LAND TEST...
...
✓ The AMM necessary procedures are to do ...

ACTION	RESULT
✓ 4. Push the line key adjacent to the CONFIRM START OF TEST indication.	The subsequent AFS/LAND TEST page comes into wiew.
✓ 5. Do the aural and visual checks that are necessary. Push the line key adjacent to the YES or NO indication during all AFS/LAND TEST:	
-If YES, you continue the sequence of all the AFS/LAND TEST pages.	On the last AFS/LAND TEST TEST OK comes into view.
-If NO	The TEST IN PROGRESS indication comes into view; then the BITE message page of the LAND TEST comes into view.
...	...

...
Close-up
...

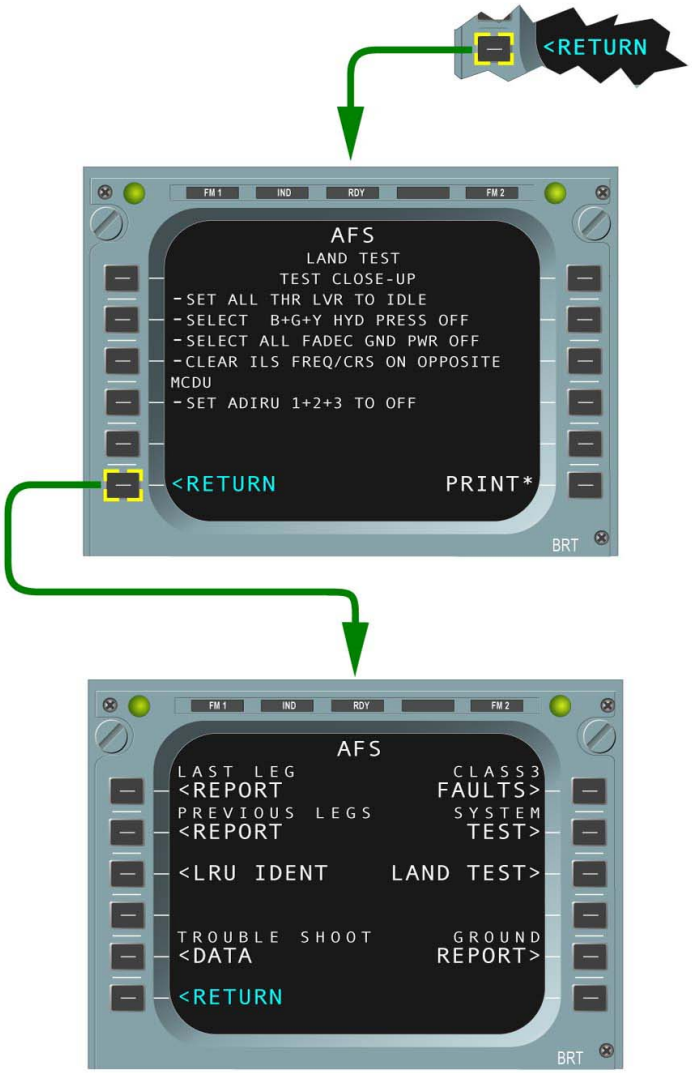

TEST OF THE LAND CAT III CAPABILITY

Test of the LAND CAT III capability

...
✓ Job set-up
...
✓ Procedure
...
✓ BITE test of the LAND CAT III
...
✓ Close-up
...

TASK COMPLETED

TEST OF THE LAND CAT III CAPABILITY

This Page Intentionally Left Blank

G7508471 - G7OT0T0 - FM22Y3BASEMCE01

AIRBUS S.A.S.
31707 BLAGNAC cedex, FRANCE
STM
REFERENCE G7508471
NOVEMBER 2008
PRINTED IN FRANCE
AIRBUS S.A.S. 2008
ALL RIGHTS RESERVED

AN EADS COMPANY

A330-200/300
TECHNICAL TRAINING MANUAL
MAINTENANCE COURSE - T1+T2 (LVL 2&3) (RR Trent 700)
COMMUNICATIONS

This document must be used for training purposes only

Under no circumstances should this document be used as a reference

It will not be updated.

All rights reserved
No part of this manual may be reproduced in any form,
by photostat, microfilm, retrieval system, or any other means,
without the prior written permission of AIRBUS S.A.S.

AIRBUS Environmental Recommendation
Please consider your environmental responsability before printing this document.

COMMUNICATIONS

Communications SYS Line Maintenance Briefing (2) 2

SPEECH COMMUNICATION

Radio Management D/O (3) 16
HF D/O (3) 26
VHF D/O (3) 34
Audio Management D/O (3) 42

SATCOM

Satellite Communication D/O (3) 58

CIDS

PA-CAB & Service Interphones Functionalities (2) 70
Cabin Intercommunication Data System D/O (3) 76

EMERGENCY LOCATOR TRANSMITTER - ATA 25 -

Emergency Locator Transmitter System D/O(CEIS) (3) 126
Emergency Locator Transmitter System D/O(ELTA) (3) 132

IN-FLIGHT ENTERTAINMENT SYSTEM

IFE System General Description (3) 136
IFE System Functionalities D/O (PANASONIC) (3) 142
IFE System D/O (PANASONIC) (3) 160
IFE System D/O (THALES) (3) 176

COCKPIT VOICE RECORDING

Cockpit Voice Recording D/O (3) 202

CAMERAS SYSTEMS

Cockpit Door Surveillance System D/O (3) 206

COMMUNICATIONS SYS LINE MAINTENANCE BRIEFING (2)

SYSTEM OVERVIEW

The use of the radio system on the Long Range aircraft is extremely important for the safe operation of the aircraft. While taxiing and towing, communication is necessary with the tower to safely move the aircraft. Basic system description and procedures will enable the student to understand system interconnection and correctly operate the systems by selecting frequencies and setting transmission and reception modes. In addition, the use of the service interphone communications will also be explained. The panels and equipment that will be explained is as follows:
- Audio Control Panel (ACP),
- Radio Management Panel (RMP),
- Audio Management Unit (AMU),
- radio transceivers,
- acoustic equipment that includes: boomsets, hand mikes, and handsets.

RMP FREQUENCY SELECTION

The RMP is the digital tuning head for the communications transceivers. They are located in the center pedestal and in the overhead panel for the 3rd observer seat. The panels have an over center ON/OFF switch. When the ON/OFF switch is switched to the ON position, two frequencies that were previously selected appear in the ACTIVE and STandBY windows. To operate the transceiver, you might have to select a new frequency on one of the Very High Frequency (VHF) or High Frequency (HF) transceivers. To do this, you must select the transceiver that you wish to transmit on. To select the radio, the related radio P/B must be pushed on the RMP. The related green Light Emitting Diode (LED) will come on.

ACP TRANSMISSION MODE SELECTION

To connect one of the acoustical devices (microphone) to the transmission line, the related transmission key must be selected on the ACP. When the transmission key is pressed (green light on) you are ready to transmit. This selection can be disabled when you select another transceiver or when you press the lighted P/B again. Only one transmit key can be selected at a time.

ACP RECEPTION MODE SELECTION

In order to listen on the selected transceiver, you must operate the ACP. On the ACP, the reception knobs allows connection of the headsets / acoustic equipment to the transceiver reception via the AMU. To select a transceiver, the related reception knob must be released out. The reception knob comes on white. To adjust the reception volume level, the selected reception knob must be turned. Communications can now be established.

ACP OPERATION

When one of the Push-to-Talk (PTT) switches is depressed, the hand mike is connected, and in this case, the VHF 1 transceiver transmits. The boomset mike is connected when a PTT is pressed in on the ACP or on the side stick. On the ACP, several reception knobs can be selected simultaneously. If the reception knob is pressed in again, the receiver is disconnected and the white light goes off.

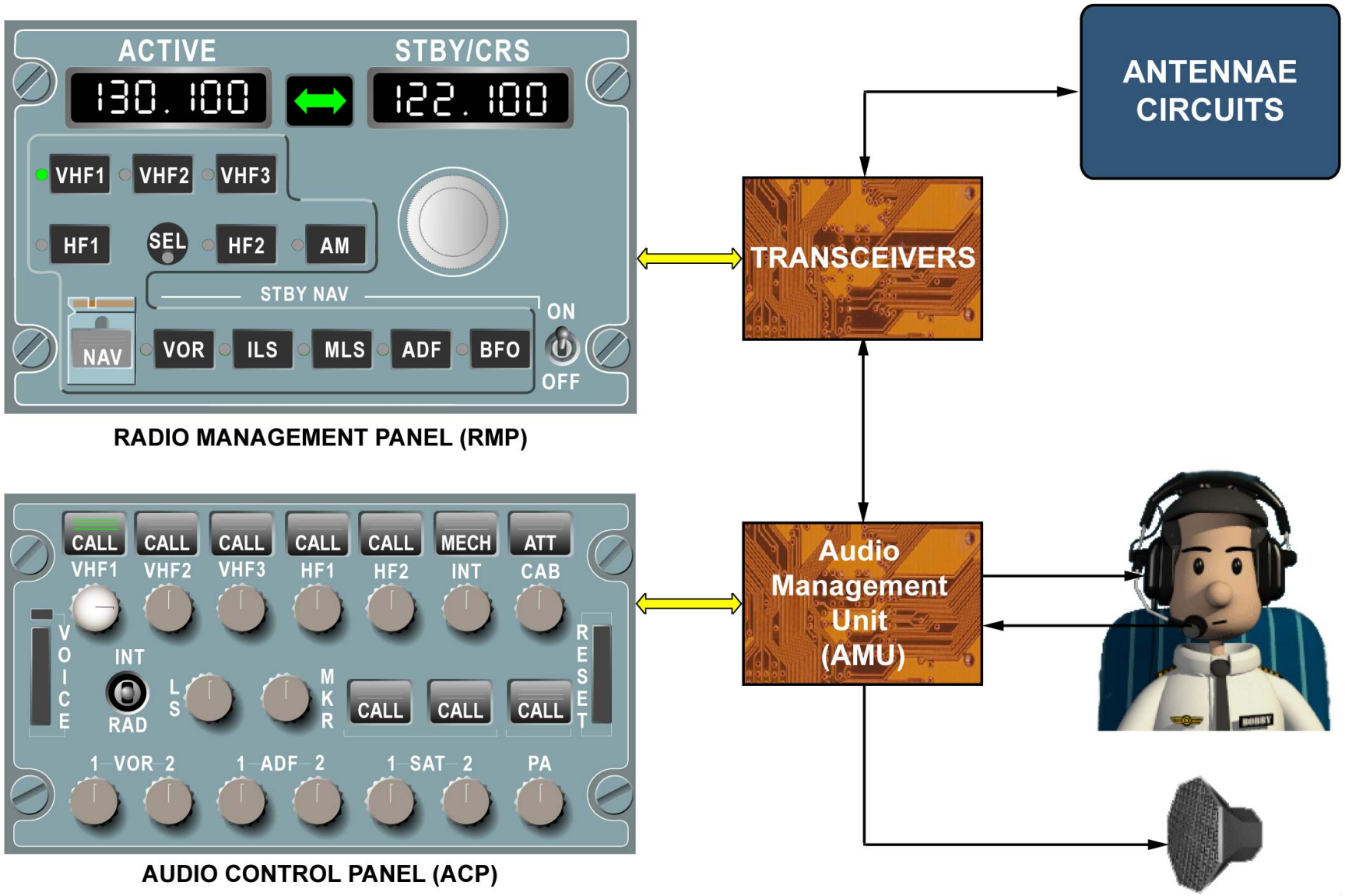

SYSTEM OVERVIEW - RMP FREQUENCY SELECTION ... ACP OPERATION

COMMUNICATIONS SYS LINE MAINTENANCE BRIEFING (2)

SYSTEM OVERVIEW (continued)

FLIGHT INTERPHONE SYSTEM OPERATION

Flight interphone selection is necessary for voice communications between flight crewmembers and for ground handling, taxiing and towing. This control is done using the ACP. If the flight crew needs to maintain the contact and communicate with the mechanic, the flight crew can push the MECHanic P/B on the CALLS panel on the overhead. The flight interphone can also act as a transceiver. Selection of the INTerphone transmission key lights the green bars, indicating that the flight interphone is ready to operate. Pressing and releasing the INT reception knob causes the knob to come on and adjusts the interphone audio level. The INTerphone/RADio selector switch must be in the INT position. The INT position gives a permanent use of the flight interphone without any further reaction and whatever radio key selected. The INT/RAD switch is a 3-position switch with INT being a stable position. The RAD selection connects the pre-selected channel to transmit. The RAD position is a momentary contact, and is spring loaded to the center position. This position acts like the selection of the hand microphone pushbutton or the PTT trigger on the side-stick.

G7508471 - G7OT0T0 - FM23B1000000001

NOSE LANDING GEAR

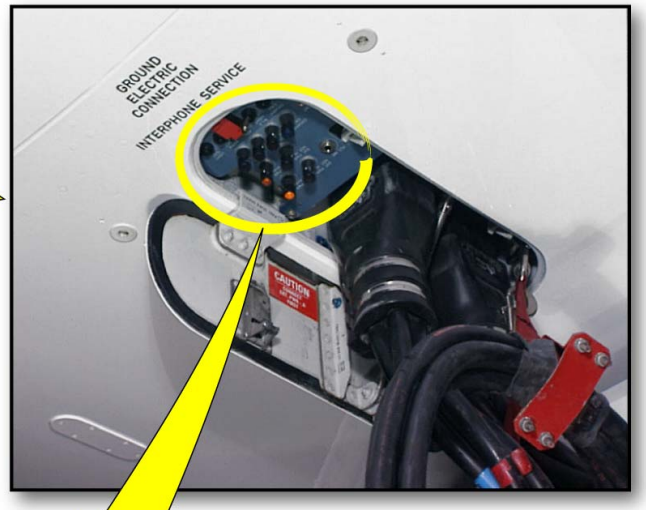

During storm conditions or when there is atmospheric electrical activity, it is recommended to remove/disconnect headsets.

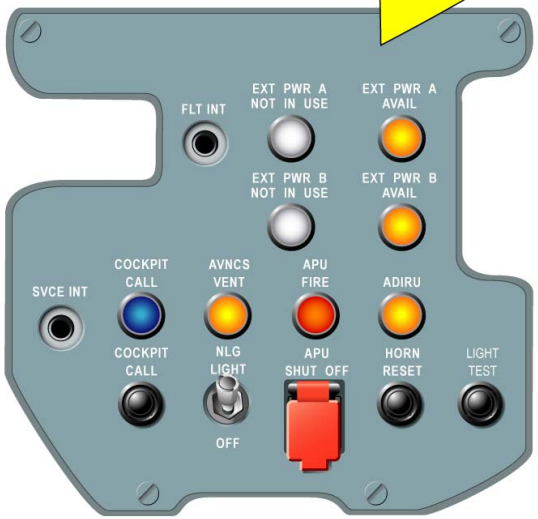

EXTERNAL POWER CONTROL PANEL (925VU)

SYSTEM OVERVIEW - FLIGHT INTERPHONE SYSTEM OPERATION

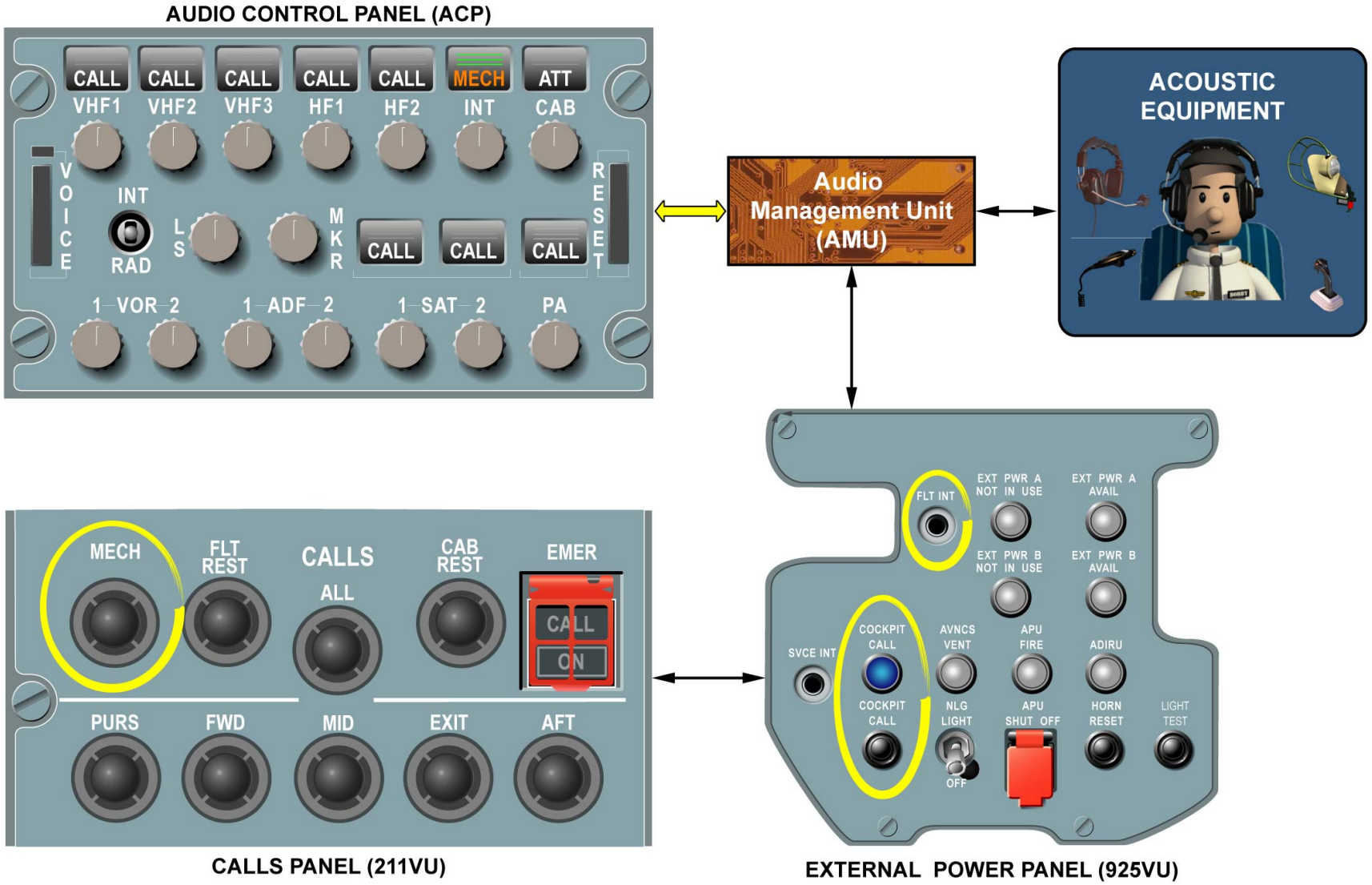

SYSTEM OVERVIEW - FLIGHT INTERPHONE SYSTEM OPERATION

This Page Intentionally Left Blank

G7508471 - G7OT0T0 - FM23B1000000001

COMMUNICATIONS SYS LINE MAINTENANCE BRIEFING (2)

SYSTEM OVERVIEW (continued)

SERVICE INTERPHONE SYSTEM OPERATION

The service interphone system has several service interphone jacks installed around the aircraft to make easier communications between maintenance personnel during troubleshooting, and between maintenance and flight crew when doing coordinated tasks; i.e. manual start valve operation.
The audio lines from the cockpit, cabin and interphone jacks are routed to the amplifiers through the amplifiers in the Cabin Intercommunication and Data System (CIDS) directors. The system is integrated in the CIDS directors. There are 2 modes to connect the jacks to the service interphone. The automatic mode on ground only with the landing gear down and compressed OR the external power contactor connected. The other mode is mentioned in the MAINTENANCE TIPS section.

SERVICE AND FLIGHT INTERPHONE OPERATION

Selecting the CAB INT transmission key and reception knob on the ACP makes a connexion between the service and the flight interphone.

G7508471 - G7OT0T0 - FM23B1000000001

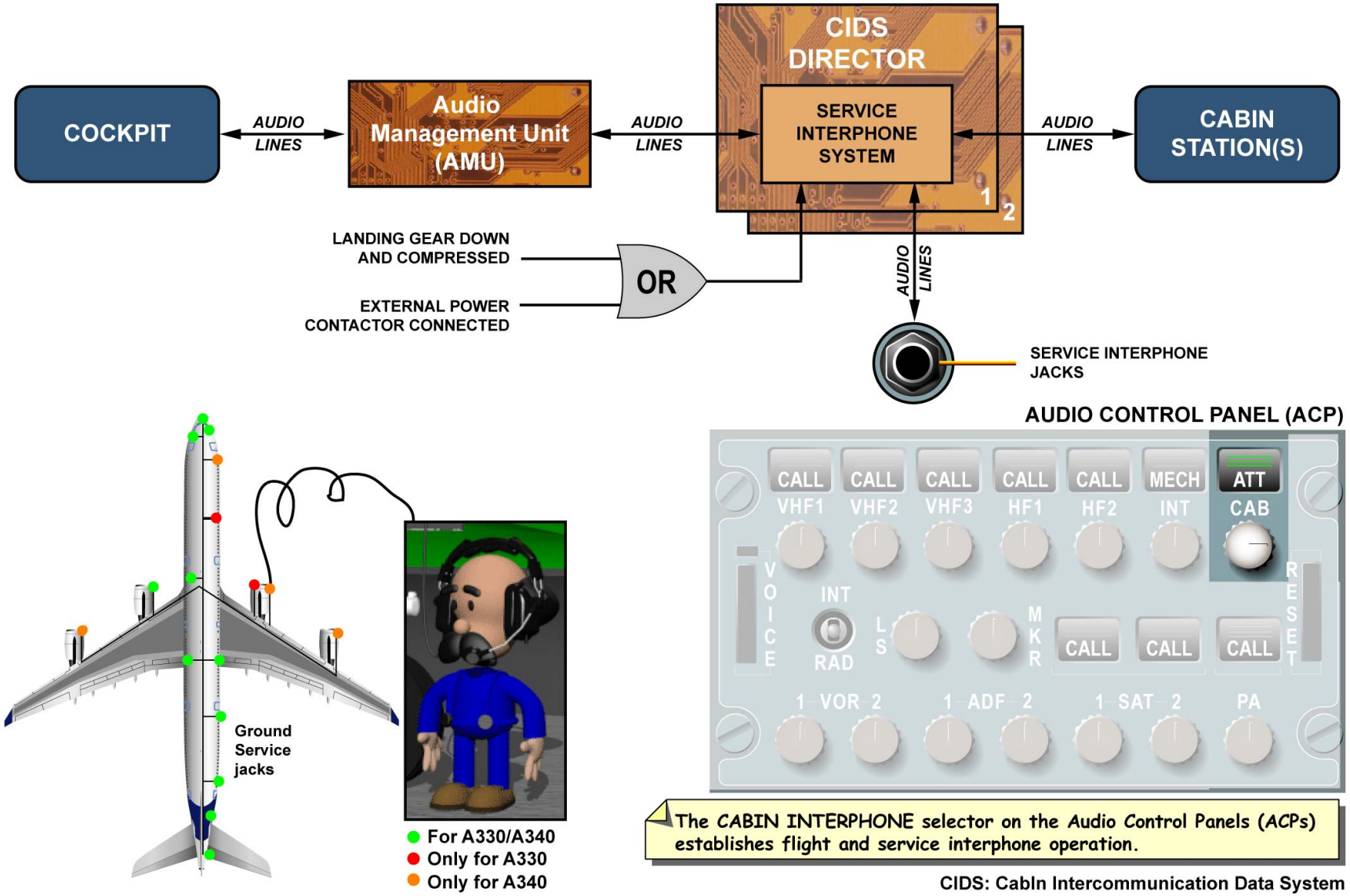

SYSTEM OVERVIEW - SERVICE INTERPHONE SYSTEM OPERATION & SERVICE AND FLIGHT INTERPHONE OPERATION

COMMUNICATIONS SYS LINE MAINTENANCE BRIEFING (2)

MAINTENANCE TIPS

SERVICE INTERPHONE INOPERATIVE ON THE GROUND

On ground, the service interphone is automatically selected on. In flight, the service interphone system is automatically selected off. The reason is to remove/stop potential static noise generated and amplified through the AMU, due to the length of wires acting as antennae, in the audio system. For maintenance tasks on ground and depending on the aircraft maintenance configuration, the service interphone can be lost. To restore the service interphone function, the SerViCE INTerphone OVeRriDe P/BSW must be switched to 'ON'. The guarded SVCE INT OVRD P/BSW is located on the cockpit overhead maintenance panel.

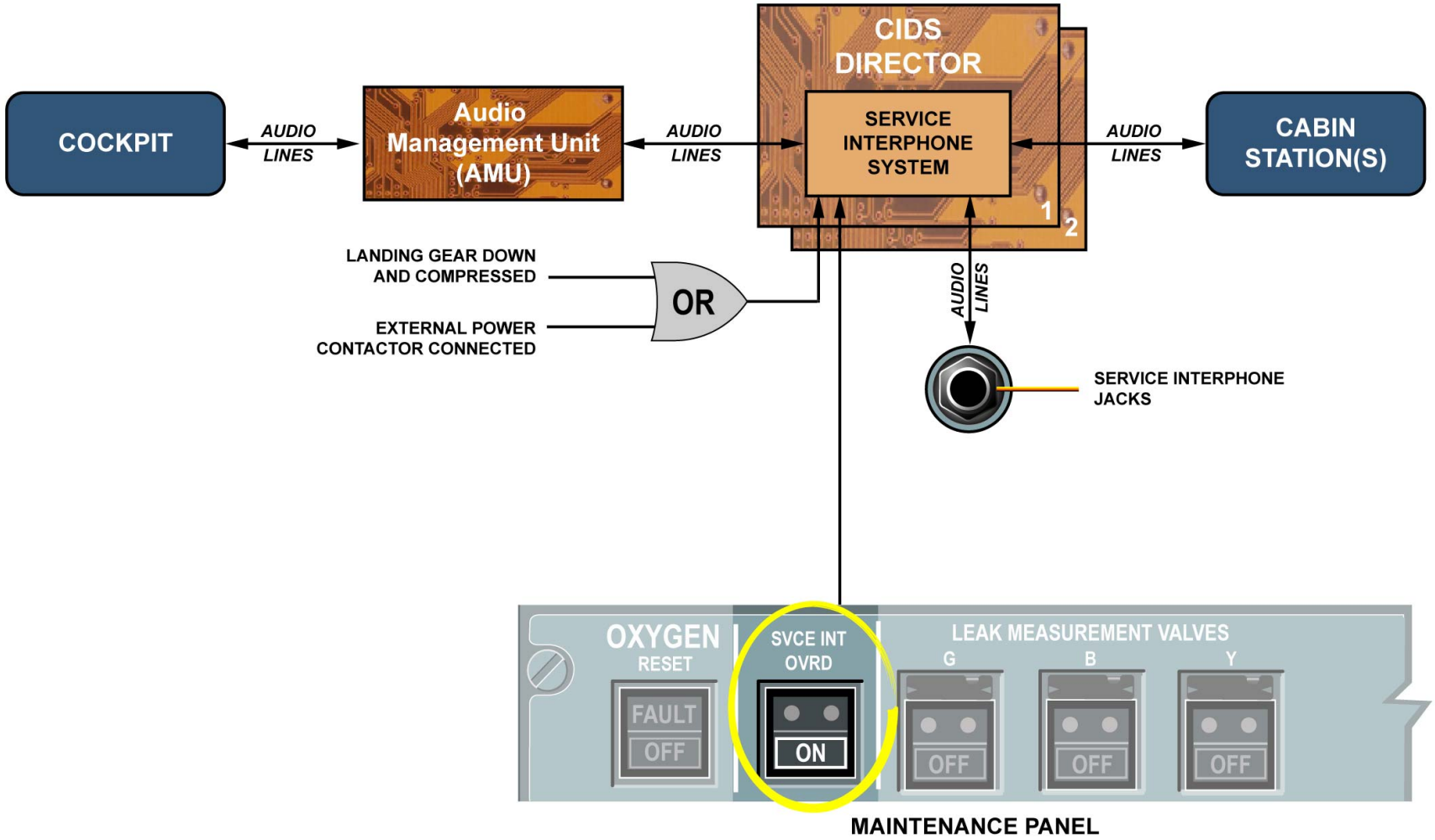

CIDS: Cabin Intercommunication Data System

MAINTENANCE TIPS - SERVICE INTERPHONE INOPERATIVE ON THE GROUND

COMMUNICATIONS SYS LINE MAINTENANCE BRIEFING (2)

MAINTENANCE TIPS (continued)

CABIN & SERVICE INTERPHONE OPERATION

Pressing the INT key twice, on the attendant handset, activates the service interphone function. A display, on the Attendant Indicating Panel (AIP), indicates that the service interphone is in use.

G7508471 - G7OT0T0 - FM23B1000000001

MAINTENANCE AREA JACK

SERVICE INTERPHONE JACK

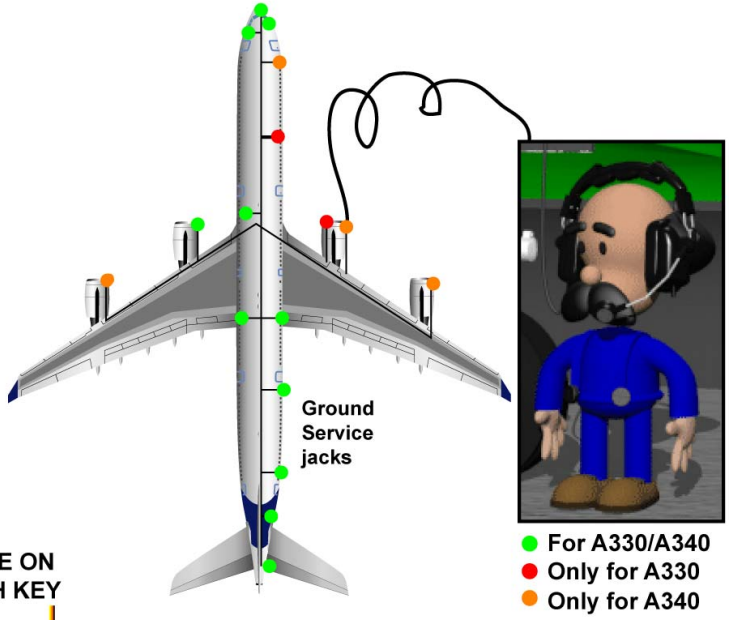

PUSH TWICE ON
INTPH KEY

CABIN HANDSET

ATTENDANT INDICATION PANEL

MAINTENANCE TIPS - CABIN & SERVICE INTERPHONE OPERATION

COMMUNICATIONS SYS LINE MAINTENANCE BRIEFING (2)

MAINTENANCE TIPS (continued)

VHF COMMUNICATION ON BATTERIES ONLY

With the aircraft only supplied by batteries, of the three VHF systems, only the VHF 1 transceiver, CAPT ACP 1 and CAPT RMP 1 can operate. Moreover, as the VHF1 antenna is installed above the cockpit and due to the size of the Long Range aircraft, it is recommended to use this system on ground for line of sight transmission.

NOTE: Note: The international emergency frequency, 121.5 MHz, must not be used for normal communication.

G7508471 - G7OT0T0 - FM23B1000000001

VHF 1 is recommended on ground for maintenance communications, run-up, etc...

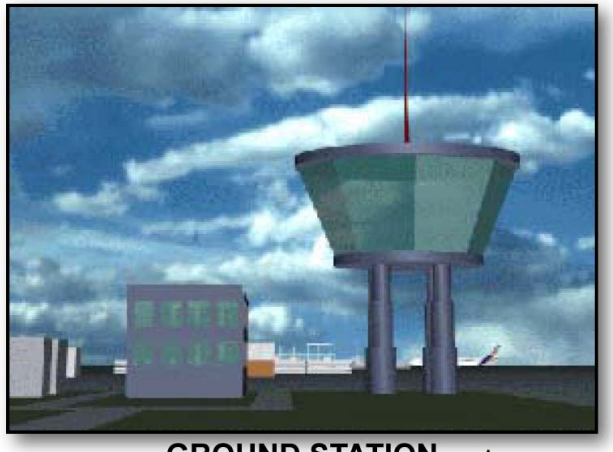

GROUND STATION

The international emergency frequency, 121.5MHz, must not be used for normal communication.

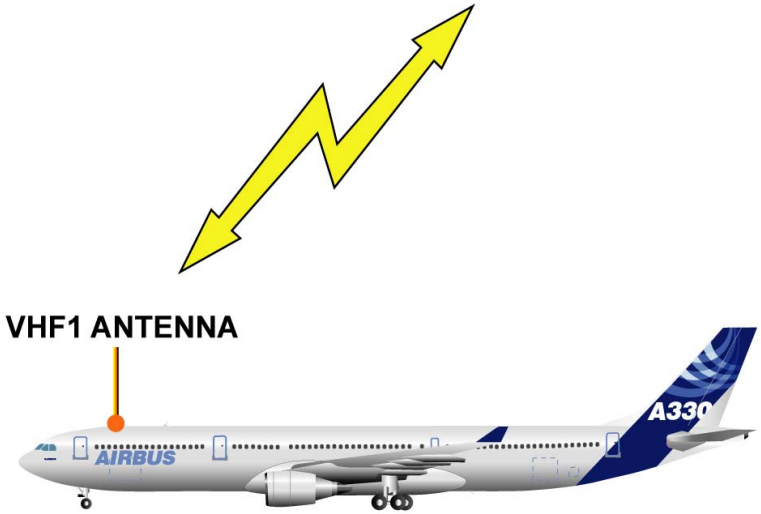

MAINTENANCE TIPS - VHF COMMUNICATION ON BATTERIES ONLY

RADIO MANAGEMENT D/O (3)

COMMUNICATION ARCHITECTURE

There are three Radio Management Panels (RMP) used for frequency selection of the different HF and VHF transceivers. The architecture of the radio management system enables the three RMPs to permanently dialog between each other. Thus, each RMP can control any of the radio transceivers. Provided that at least one RMP is available, all HF and VHF transceivers can be controlled. RMP1 and RMP2 are directly connected to all the HF and VHF radio transceivers. The RMP3 is only connected to the RMP1 and RMP 2. Only RMP 1 and RMP 2 can control the radio navigation systems in back-up mode when the Flight Management Guidance and Envelope Computers (FMGEC) have failed.
Each RMP is normally dedicated to controlling a particular radio:
- RMP 1 is dedicated to the VHF Data Radio transceiver 1 (VDR 1),
- RMP 2 is dedicated to VDR 2,
- RMP 3 is dedicated to VDR 3 and the two HF Data Radio transceivers, HFDR 1 and HFDR 2.

If an RMP takes control of a non-dedicated transceiver, the SELector light will come on white on this RMP and on the RMP dedicated to the selected transceiver.

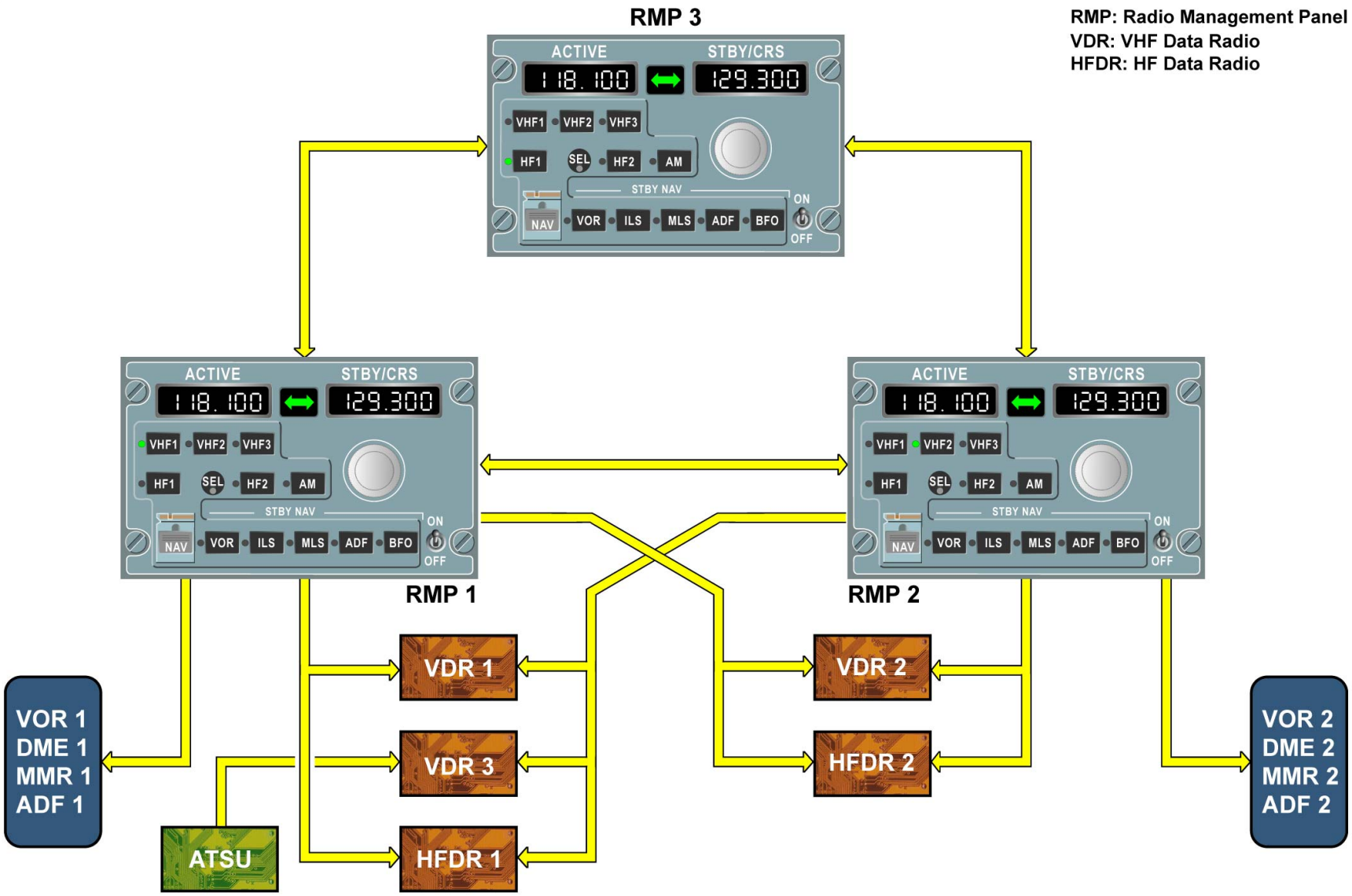

COMMUNICATION ARCHITECTURE

G7508471 - G7OT0T0 - FM23D1F23SC0102

RADIO MANAGEMENT D/O (3)

DESCRIPTION

RMP 1 and RMP 2 have two ARINC 429 data buses connected to the radio communication transceivers:
- COM BUS 1 delivers the VDR 1, VDR 3 and HFDR 1 frequencies,
- COM BUS 2 delivers the VDR 2 and HFDR 2 frequencies.

Three dialog buses ensure the exchange of information between the three RMPs. Each RMP periodically transmits its context on its dialog bus.
RMP 3 controls the radio communication transceivers through dialog buses and RMP 1 and RMP 2. PORT SELECT DISCRETE lines determine which port (A or B) is active.
RMP 1 is allocated to VDR 1, RMP 2 is allocated to VDR 2 and RMP 3 is allocated to VDR 3, HFDR 1 and HFDR 2. Each time the system operates in a different configuration, the SEL indicator on the involved RMPs comes on. The Air Traffic Service Unit (ATSU) controls VDR 3 frequencies through PORT A. The port select discrete is controlled by the ATSU.
RMP 1 is connected to the Central Maintenance System (CMS) through the two Central Maintenance Computers (CMC). The CMCs send the option status, defined by means of the pin programming, to the RMPs.
In order to increment the flight leg, the Landing Gear Control and Interface Unit (LGCIU) 1 is connected to RMP 1 and LGCIU 2 is connected to RMP 2 and RMP 3. In the event of RMP 1 failure, the RMP 3 becomes the main unit for BITE information. If only RMP 2 is available, communication with the CMC is lost.

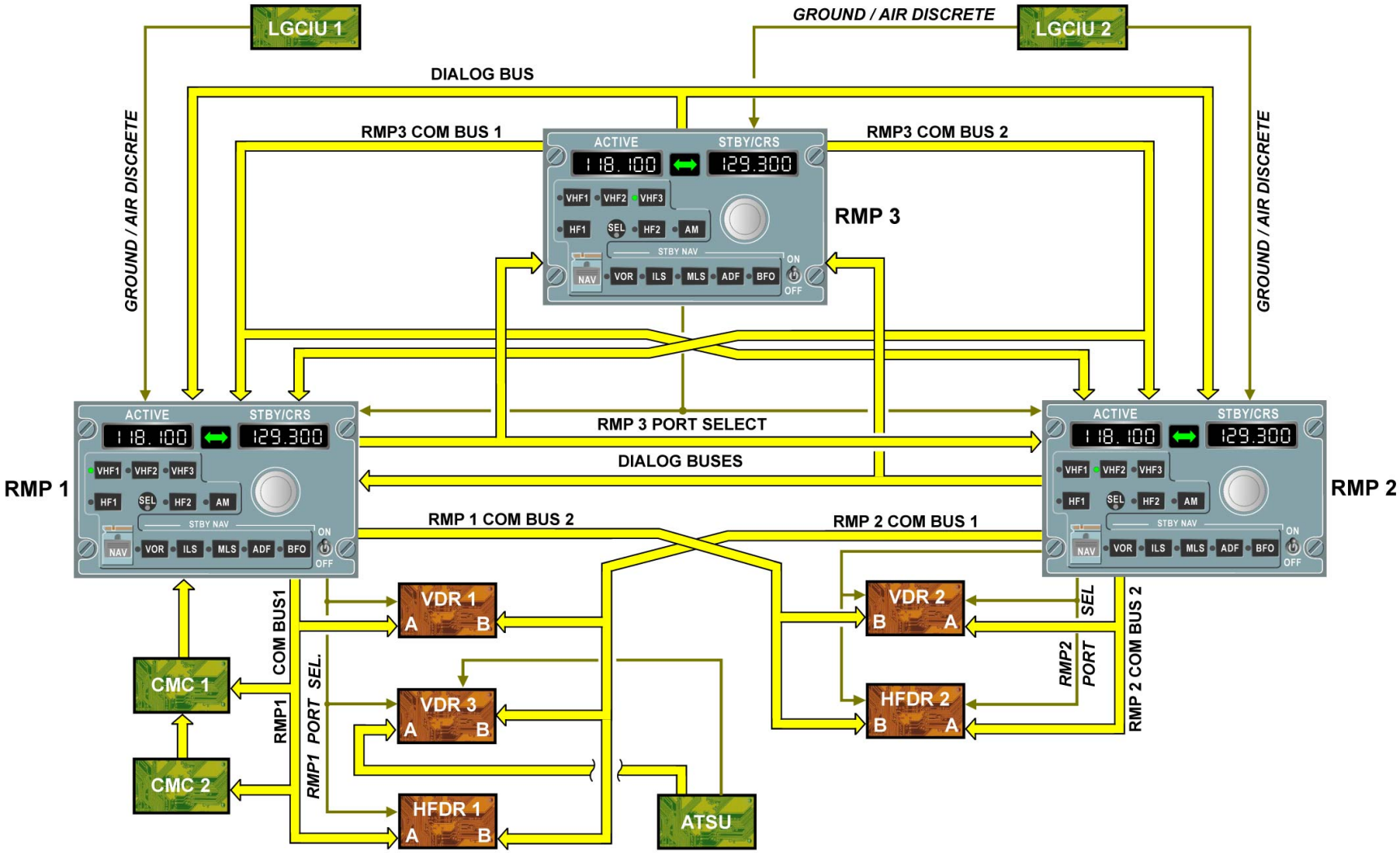

DESCRIPTION

RADIO MANAGEMENT D/O (3)

OPERATION

NORMAL OPERATION

In normal configuration, RMP 3 sends frequencies to the radio communication transceivers via its dialog buses and through RMP 1 and RMP 2. In normal operation, RMP 1 and RMP 2 send frequencies to PORT A radio communication transceivers (except for VDR3). ATSU is linked to the port A of the VDR3 for data mode and port B is used for voice mode.

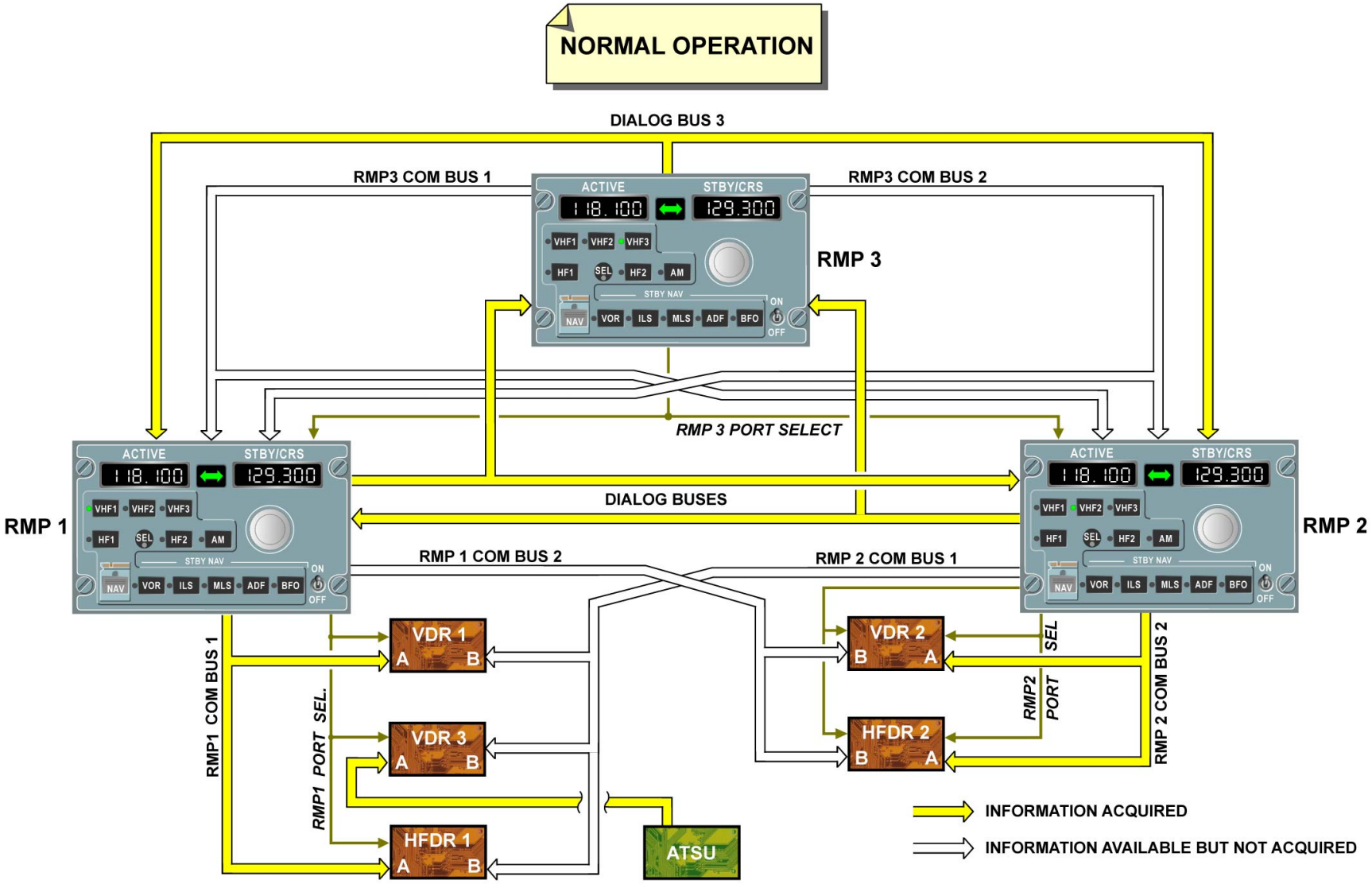

OPERATION - NORMAL OPERATION

RADIO MANAGEMENT D/O (3)

OPERATION (continued)

RECONFIGURATION

In case of failure of one RMP, the other RMPs control all the radio communication transceivers via their dialog buses and through RMP 1 and RMP 2. When one RMP is defective, the displays become blank. Switching it OFF, enables the control of the onside radio communication transceivers from the other RMPs.
If RMP 1 and RMP 2 fail, RMP 3 controls all the radio communication transceivers (VHF and HF).
In case of RMP 2 and RMP 3 failure, RMP 2 PORT DISCRETE selects PORT B on the side 2 transceivers. In this case, RMP 1 controls all the radio communication transceivers. In case of RMP 1 and RMP 3 failure, RMP 1 COM DISCRETE selects PORT B on the side 1 transceivers.

G7508471 - G7OT0T0 - FM23D1F23SC0102

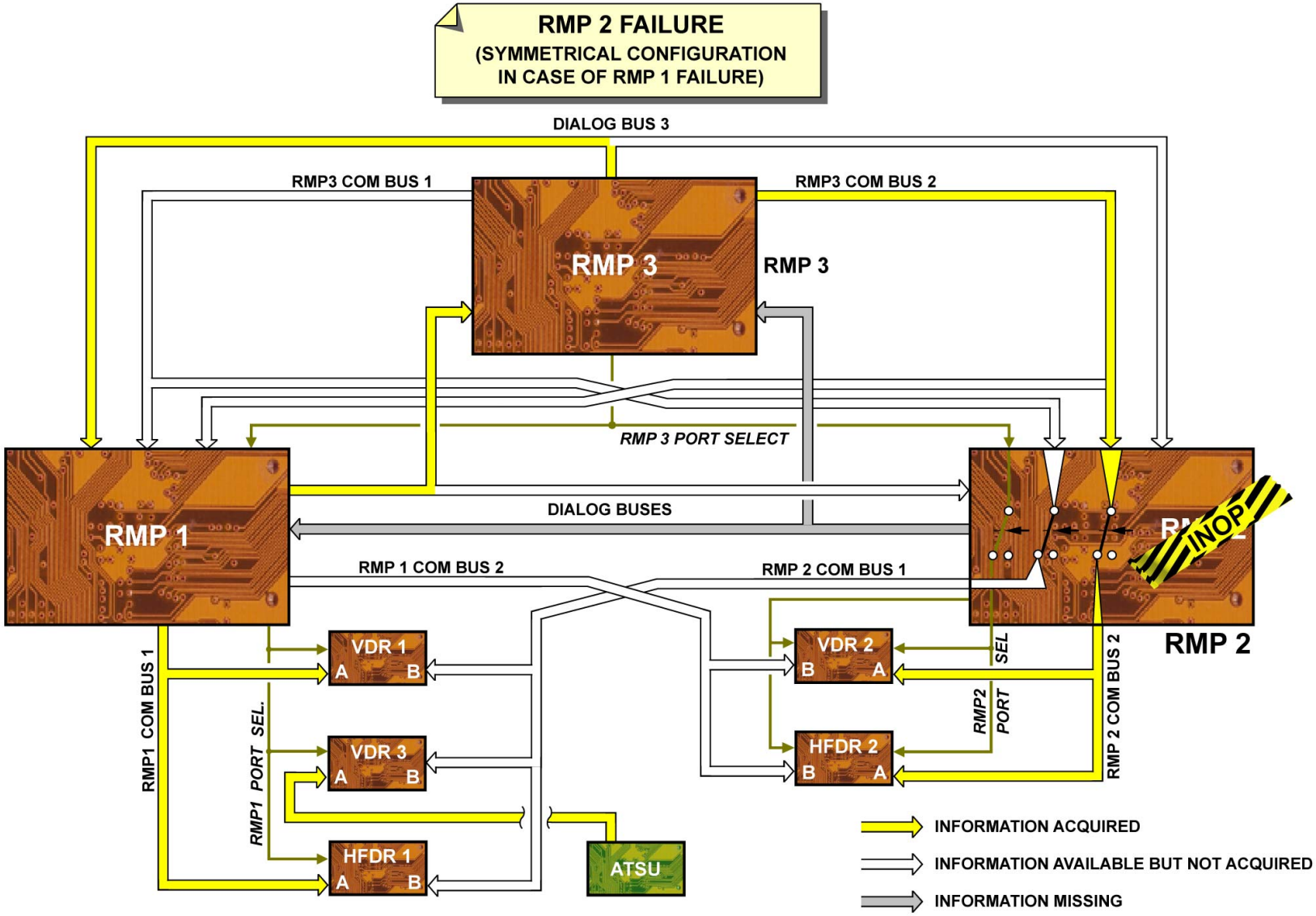

OPERATION - RECONFIGURATION

G7508471 - G7OT0T0 - FM23D1F23SC0102

RMP 1 + 2 FAILURE

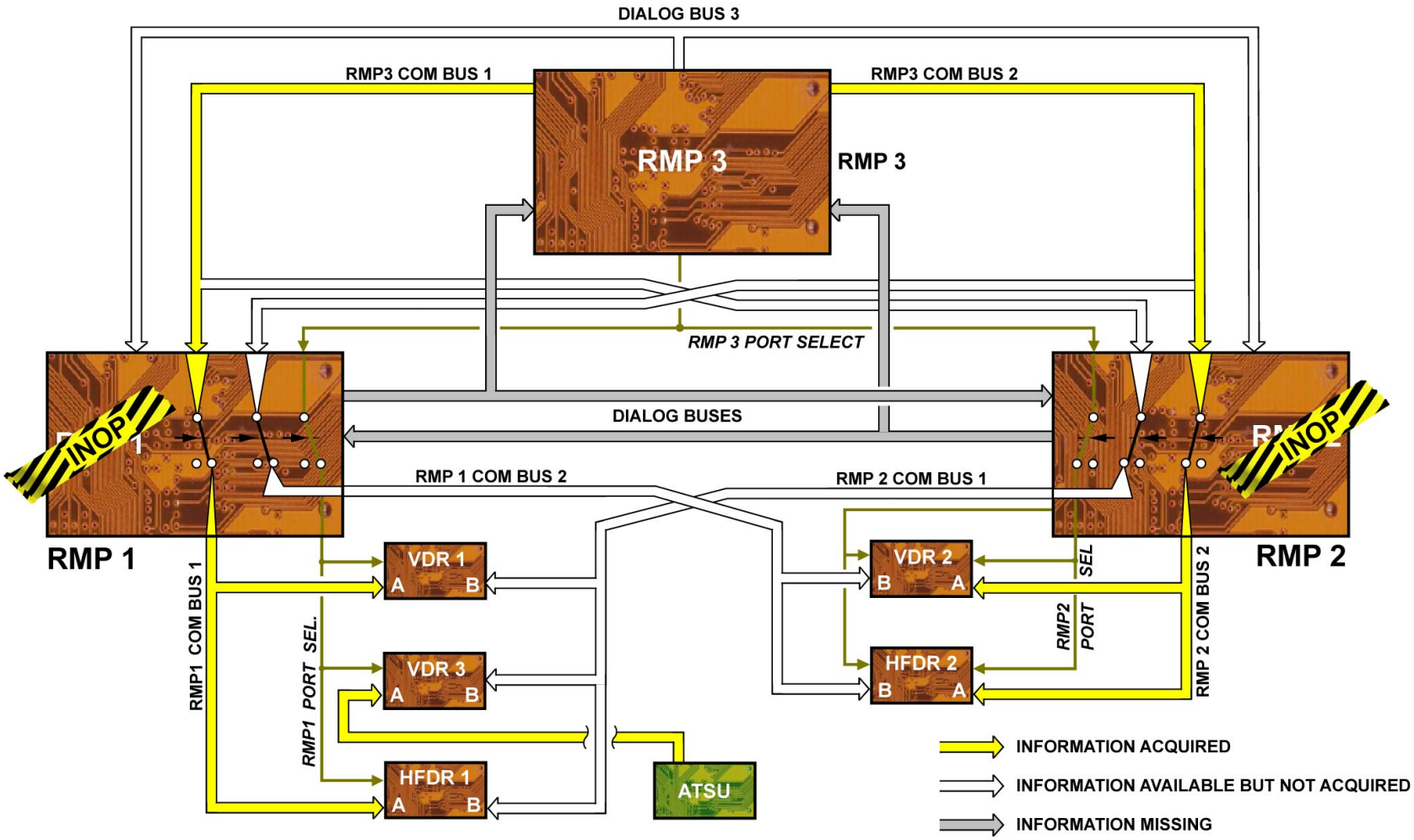

OPERATION - RECONFIGURATION

G7508471 - G7OT0T0 - FM23D1F23SC0102

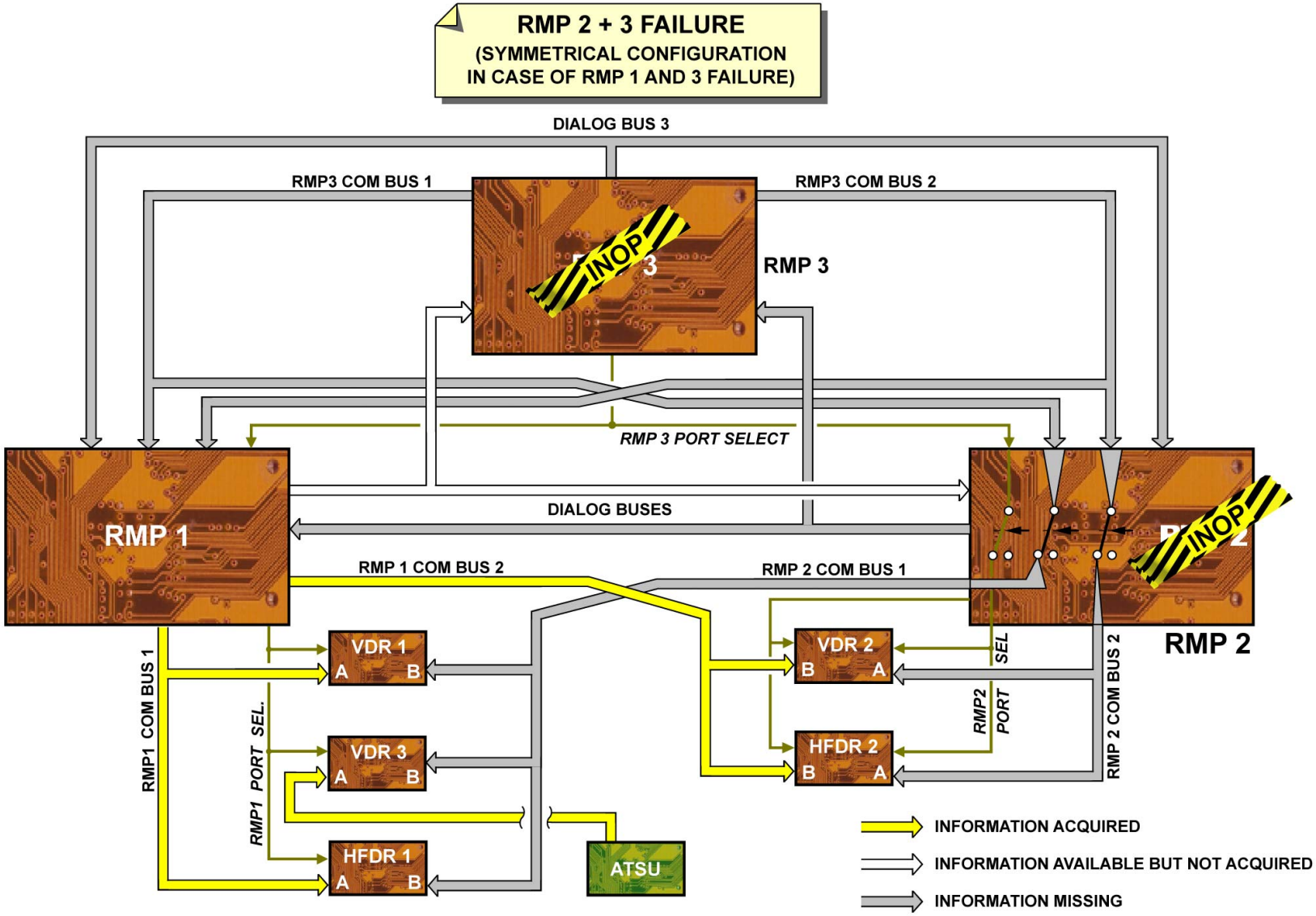

OPERATION - RECONFIGURATION

G7508471 - G7OT0T0 - FM23D1F23SC0102

HF D/O (3)

GENERAL

The High Frequency (HF) system allows long distance voice communications between A/C (in flight or on ground), or between the A/C and a ground station. The HF system is comprised of:
- 2 High Frequency Data Radio (HFDR) transceivers,
- 2 HFDR couplers,
- 1 shunt-type antenna.

G7508471 - G7OT0T0 - FM23D200000002

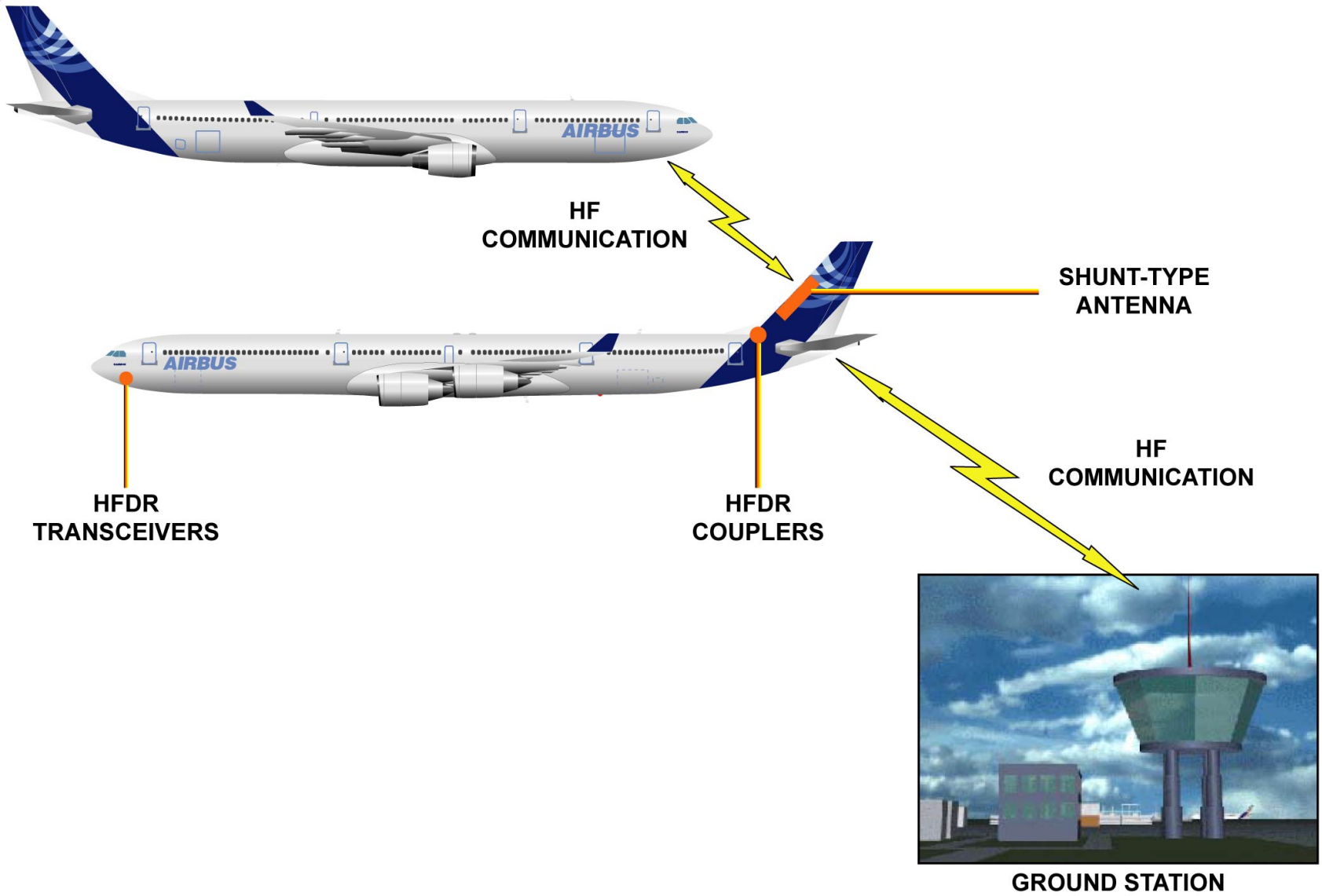

GENERAL

G7508471 - G7OT0T0 - FM23D200000002

HF D/O (3)

MAIN COMPONENTS OF THE HF SYSTEM

The main components of the HF system are:
- the HFDR 1/2 transceivers,
- the HFDR 1/2 coupler, which provides impedance matching between the HF shunt-type antenna and the transceiver,
- the HF shunt-type antenna,
- the Radio Management Panels (RMPs),
- the Audio Management Unit (AMU),
- the Audio Control Panels (ACPs),
- the acoustic equipment, which is composed of 2 side-stick radio selectors, 2 loudspeakers, 3 oxygen mask microphones, facilities for boomsets, headsets and hand microphones.

G7508471 - G7OT0T0 - FM23D200000002

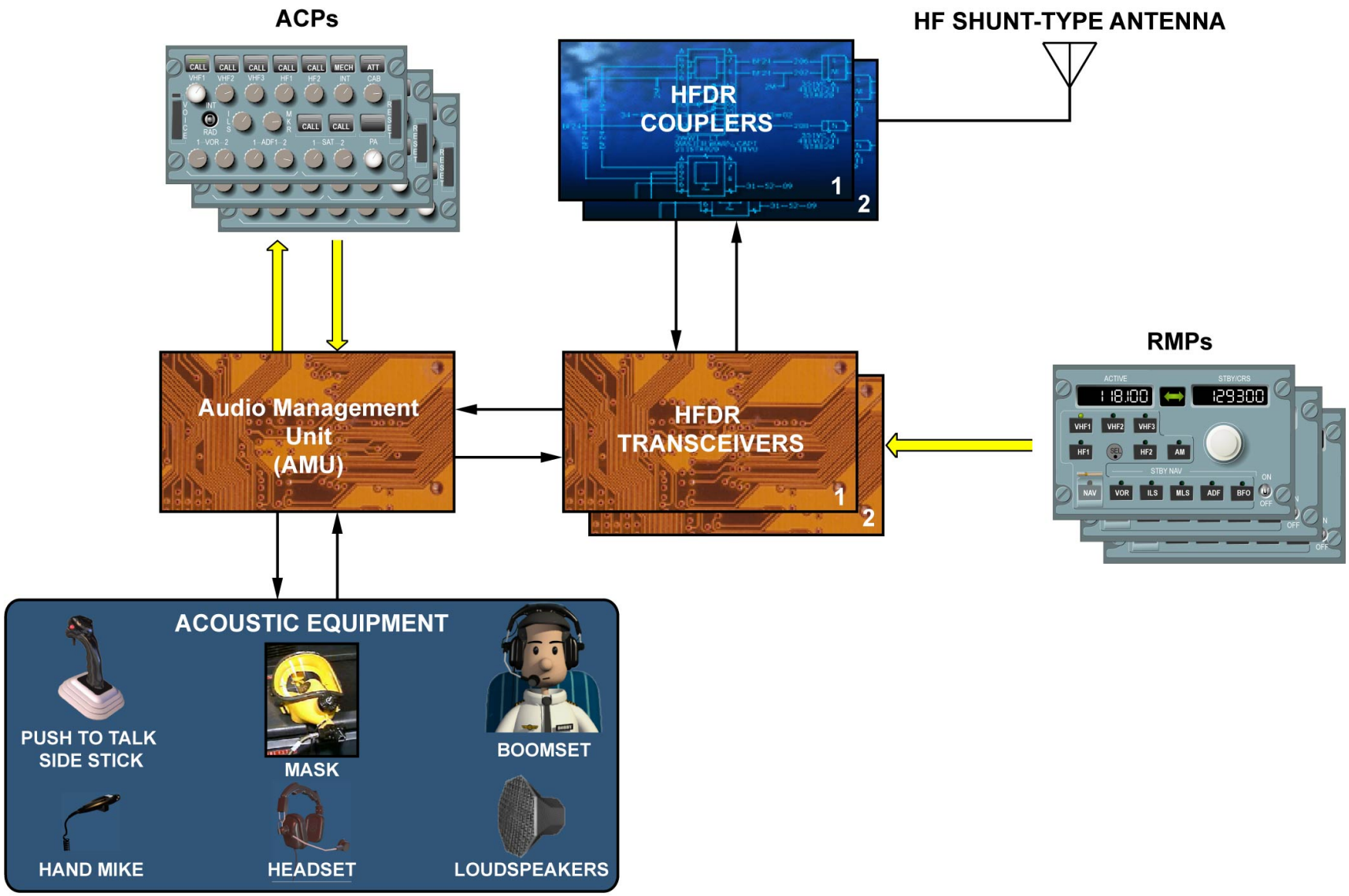

MAIN COMPONENTS OF THE HF SYSTEM

HF D/O (3)

SYSTEM ARCHITECTURE

In the HF system, the RMPs are used for HF1 and HF2 frequency control.
The HFDR transceivers have 2 serial input ports:
- serial input port A,
- serial input port B.

In normal conditions, both transceivers are tuned through port A from any RMP. The secondary port is dedicated to RMP2 when RMP1 and RMP3 have failed. RMP3 controls the radio communications transceivers through dialog buses, and RMP1 and RMP2. The port selection is performed through the PORT SELECTION information line.
The AMU acts as an interface between the users and the HF systems for transmission and reception of audio signals. The Push-to-Talk (PTT) key line is a ground signal sent to the transceiver through the AMU. The SELective CALling (SELCAL) system gives visual and aural indications to the flight crew, concerning calls received through the HF system.

NOTE: The SELCAL function is integrated in the AMU.

The ACPs are used for HF transmission or reception selection mode and control of the received audio signal levels through the AMU.
A BITE is integrated in the HF transceiver, for maintenance purposes. The BITE maintains 2-way communications with the Central Maintenance Computers (CMCs) through ARINC 429 buses. The BITE is used to detect and identify internal and external transceiver failures, to store maintenance data in a memory, to inform the external maintenance monitor, the CMC, and to execute tests.
Through the Landing Gear Control and Interface Unit (LGCIU) 1/2 a discrete ground signal is sent to the HF transceivers, when the A/C is in flight with L/G down or not. The LGCIU sends the flight/ground A/C status used by the HF BITE, in order to increment the fault memory, in case of failure of the CMCs.

If the transmission lasts more than 1 minute, the "HF1 EMITTING" or "HF2 EMITTING" amber message is displayed on the EWD, through the System Data Acquisition Concentrator (SDAC) 1/2.
The HFDR 1 transceiver is connected to the Air Traffic Service Unit (ATSU) for direct exchange of data between the A/C and ground systems like A/C report or weather report.
The HFDR transceivers are also connected to the Data Loading Routing Box (DLRB), which is used to load the HFDR software.

NOTE: The DLRB / HFDR transceivers connection is optional on A330 and A340-300.

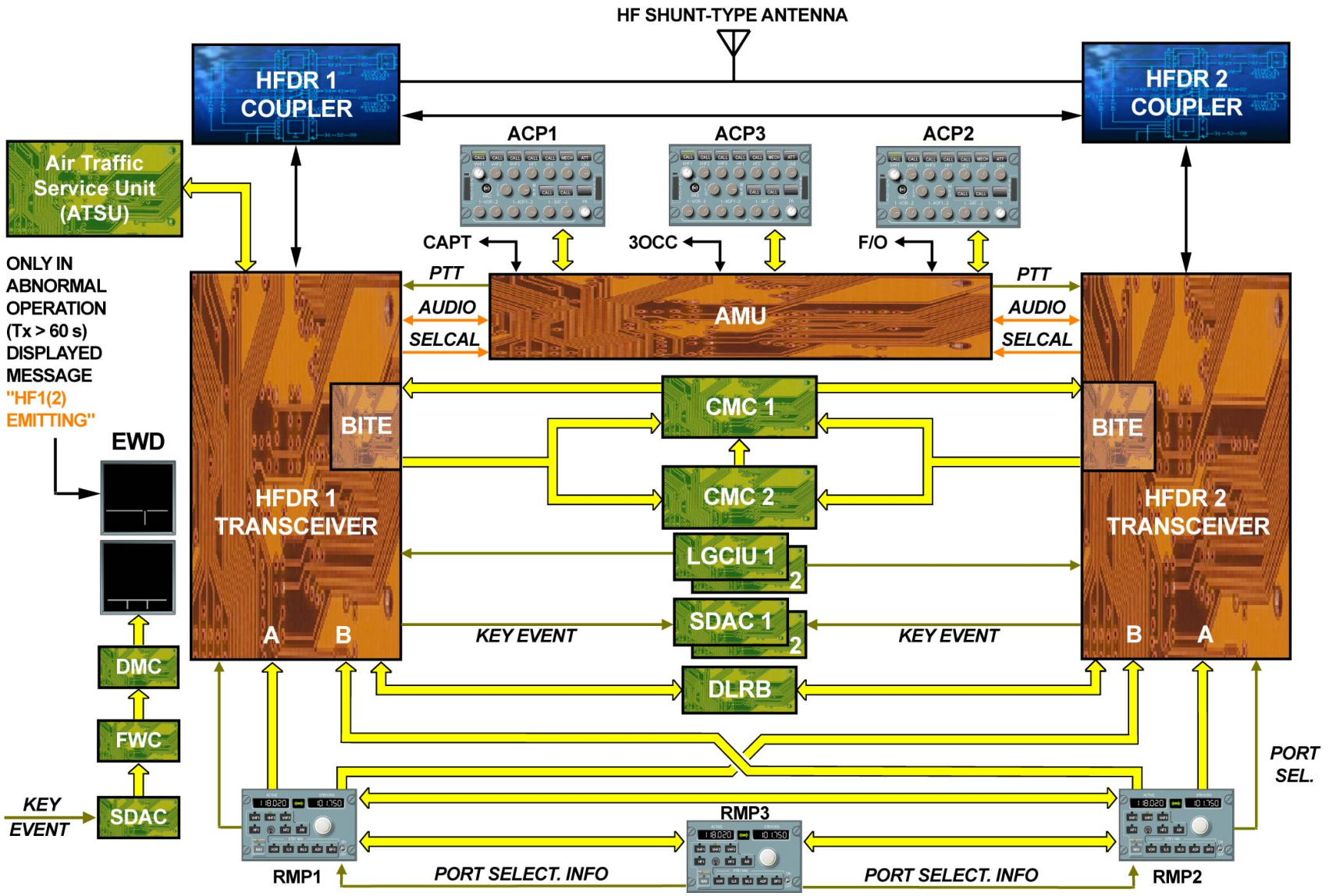

SYSTEM ARCHITECTURE

HF D/O (3)

INTERFACE OF THE HFDR TRANSCEIVERS

The HFDR transceiver is linked to other systems through 3 types of lines:
- first, ARINC 429 buses with the RMPs, the CMCs. The signal used is serial 32-bit word with a dedicated label. From RMPs to HFDR transceivers, two successive serial 32-bit tuning words with label 037, are dedicated only to HFDR transceivers. The first word contains:
- label 037,
- mode (SSB/AM/USB/LSB),
- 1 KHz, 10 KHz, 100 KHz,
- 1 MHz, 10 MHz,
- sign/status,
- parity.

The second word contains:
- label 037,
- continuous wave enable,
- 100 Hz,
- sign/status,
- parity.

For maintenance purposes, the HF BITE transmits failure messages with label 356 to the CMCs. The label 377 (EQUIPMENT IDENTIFICATION) is also sent to the CMCs. To compute the HF BITE, the CMCs transmit flight/ground status information to the transceivers through label 227. An ARINC 429 High Speed (HS) bus is used between the HFDR 1 and the ATSU.
- second, discrete lines, from or to systems, the electrical level used by the KEY EVENT, the PTT key line, the flight/ground status or the PORT SELECTION information is a ground/open circuit. DISABLE 1/ DISABLE 2: for a dual HF system installation, pin X of coupler 1 must be connected to pin Y of coupler 2, to prevent any damage to the isolation amplifiers of both couplers. When in data mode, digital information is transmitted between HF1 and ATSU, HF transmission is inhibited on ground. A GND HF DATALINK P/BSW, located on the overhead panel, may override the inhibition. HF must not be used during refueling.
- third, analog lines are used for audio signals, side tone and the SELCAL information.

CHARACTERISTICS

The HF transceiver complies with the standard defined by ARINC 719:
TRANSMITTER:
- rf output power: SSB: 400 W pep, 125 W average,
- am: 125 W,
- tune: 72 to 85 W average,
- output impedance: 50 Ohms.

FREQUENCY RANGE:
- 2.0000 to 29.9999 MHz (wide),
- 2.8000 to 23.9999 MHz (narrow).

Out-of-range selection indicated by aural tone.

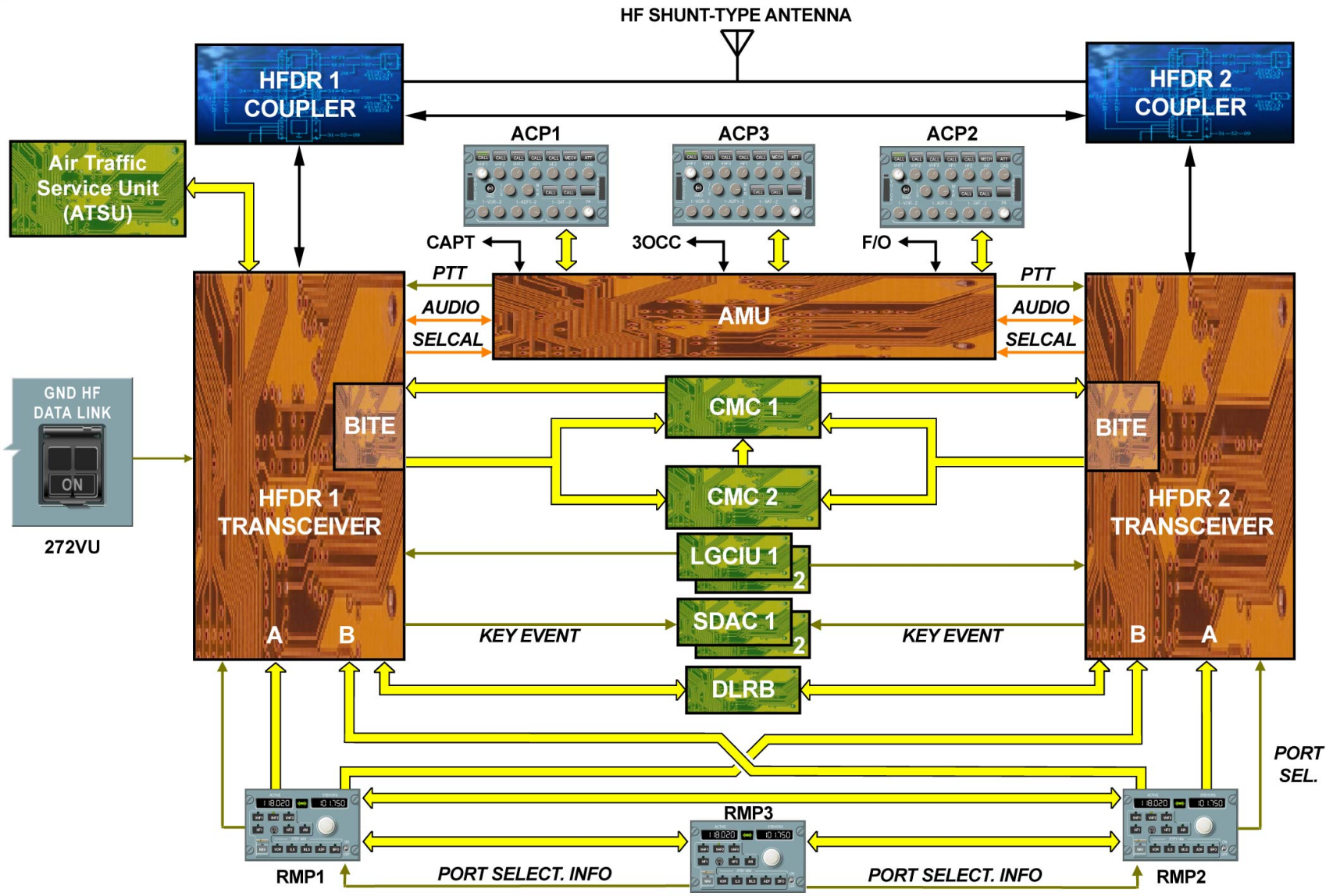

INTERFACE OF THE HFDR TRANSCEIVERS - CHARACTERISTICS

G7508471 - G7OT0T0 - FM23D200000002

VHF D/O (3)

GENERAL

The VHF system allows short distance voice communications between different A/C (in flight or on ground), or between the A/C and a ground station. The basic version is equipped with 3 VHF Data Radio (VDR) transceivers used for voice communications. The VHF system comprises:
- 3 VDR transceivers,
- 3 blade antennae.

G7508471 - G7OT0T0 - FM23D300000002

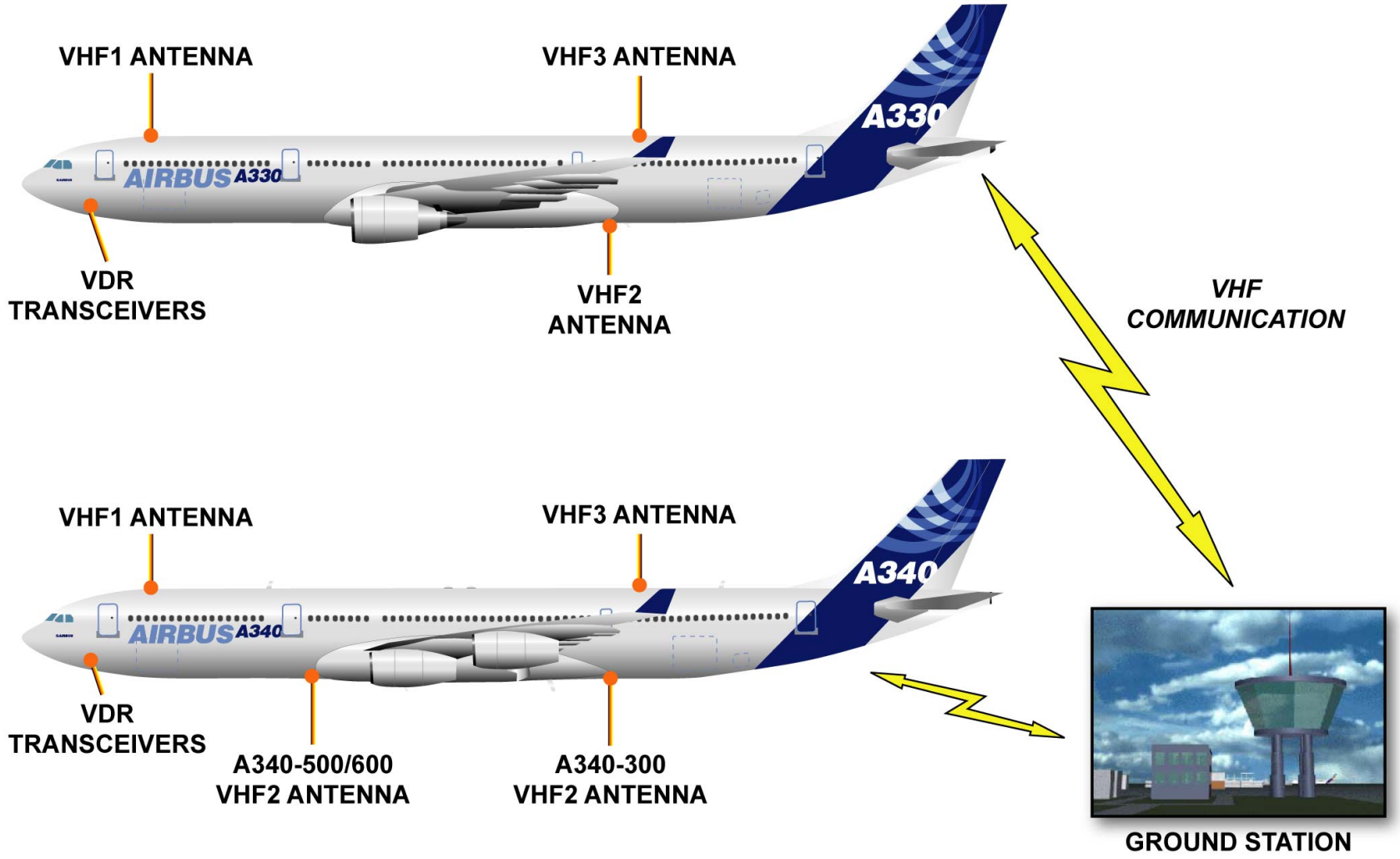

GENERAL

G7508471 - G7OT0T0 - FM23D300000002

VHF D/O (3)

MAIN COMPONENTS OF THE VHF SYSTEM

The main components of the VHF system are:
- the VDR 1/2/3 transceivers,
- the VHF antennae,
- the Radio Management Panels (RMPs),
- the Audio Management Unit (AMU),
- the Audio Control Panels (ACPs),
- the acoustic equipment, which is composed of 2 side-stick radio push to talk, 2 loudspeakers, 3 oxygen mask microphones, facilities for boomsets, headsets and microphones.

G7508471 - G7OT0T0 - FM23D300000002

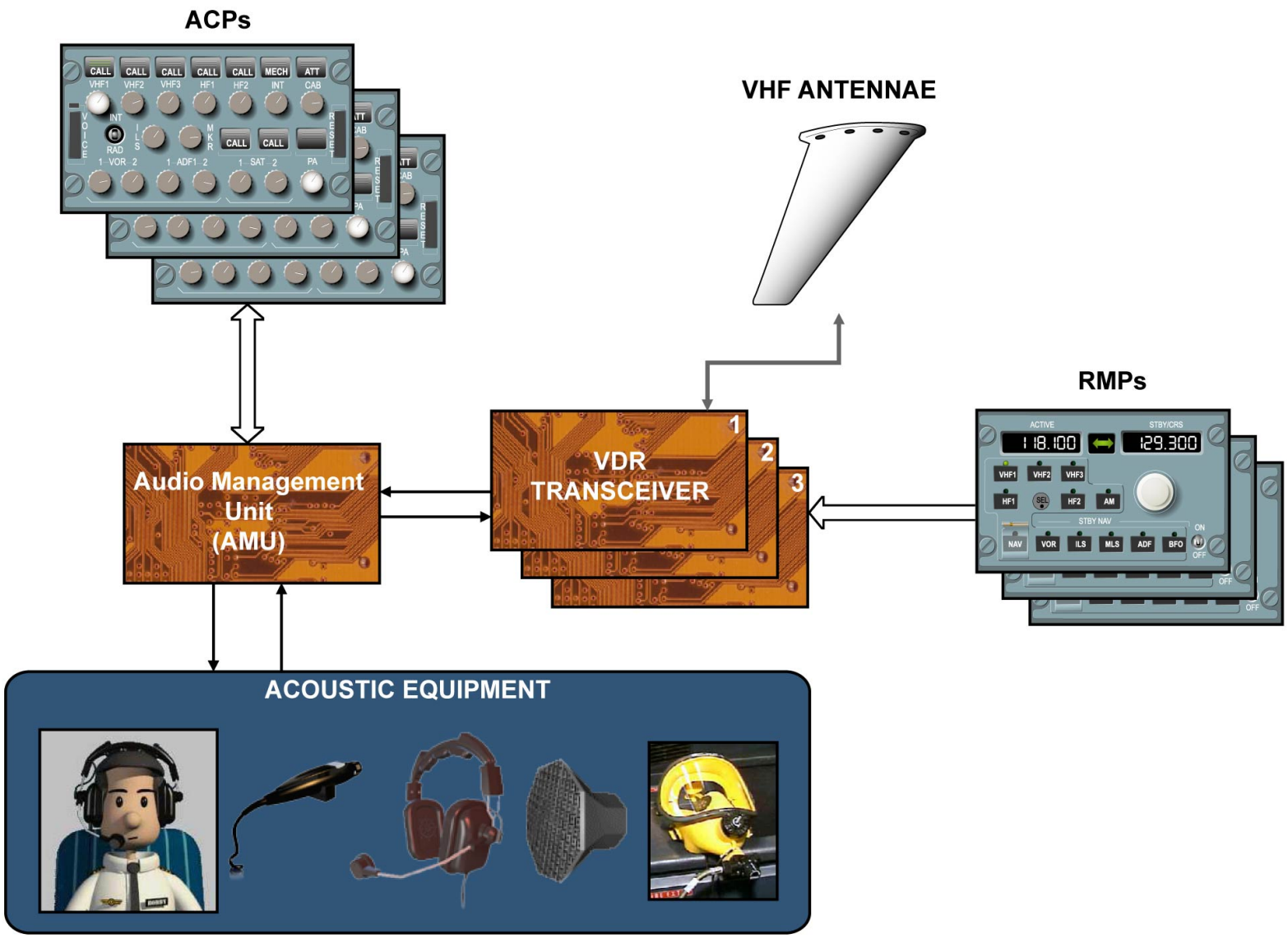

MAIN COMPONENTS OF THE VHF SYSTEM

G7508471 - G7OT0T0 - FM23D300000002

VHF D/O (3)

SYSTEM ARCHITECTURE

In the VHF system,the RMPs are used for VDR1, 2 and 3 frequency control. The VDR transceivers have 2 serial input ports: serial input port A and serial input port B.In normal conditions, the three transceivers are tuned through port A from any RMP. The secondary port is dedicated to RMP2 when RMP1 and RMP3 have failed. RMP3 controls the radio communication transceivers through dialog buses and RMP1 and RMP2.The port selection is performed through the PORT SELECTION information line.
The AMU acts as an interface between the users and the VHF systems for transmission and reception of audio signals. The Push-to-talk (PTT) key line is a ground signal sent to the transceivers through the AMU.
The ACPs are used for VHF transmission or reception selection mode and control of the received audio signal levels through the AMU.
The VDR transceiver is a type 1 BITE system.
From the Landing Gear Control and Interface Units (LGCIUs) a discrete ground signal is sent to the VDR transceivers, when the A/C is in flight with L/G down or not. The LGCIU sends the FLIGHT/GROUND A/C status used by the VDR BITE, in order to increment the flight leg.
If the transmission lasts more than 1 minute, the "VHF1 EMITTING", "VHF2 EMITTING" or "VHF3 EMITTING" amber message is displayed on the EWD, through the System Data Acquisition Concentrators (SDACs).

NOTE: Note: when a transmission lasts more than 30 seconds, the transceiver emits an aural warning during 5 seconds.

The VDR 3 transceiver is also connected to the Air Traffic Service Unit (ATSU) for direct exchange of data between the A/C and ground systems like A/C report or weather report. In normal operation, the VDR 3 transceiver is tuned by the ATSU.

SELCAL

The SELective CALling (SELCAL) system gives visual and aural indications to the flight crew, concerning calls received through the VHF system.

NOTE: Note: the SELCAL function is integrated in the AMU.

G7508471 - G7OT0T0 - FM23D300000002

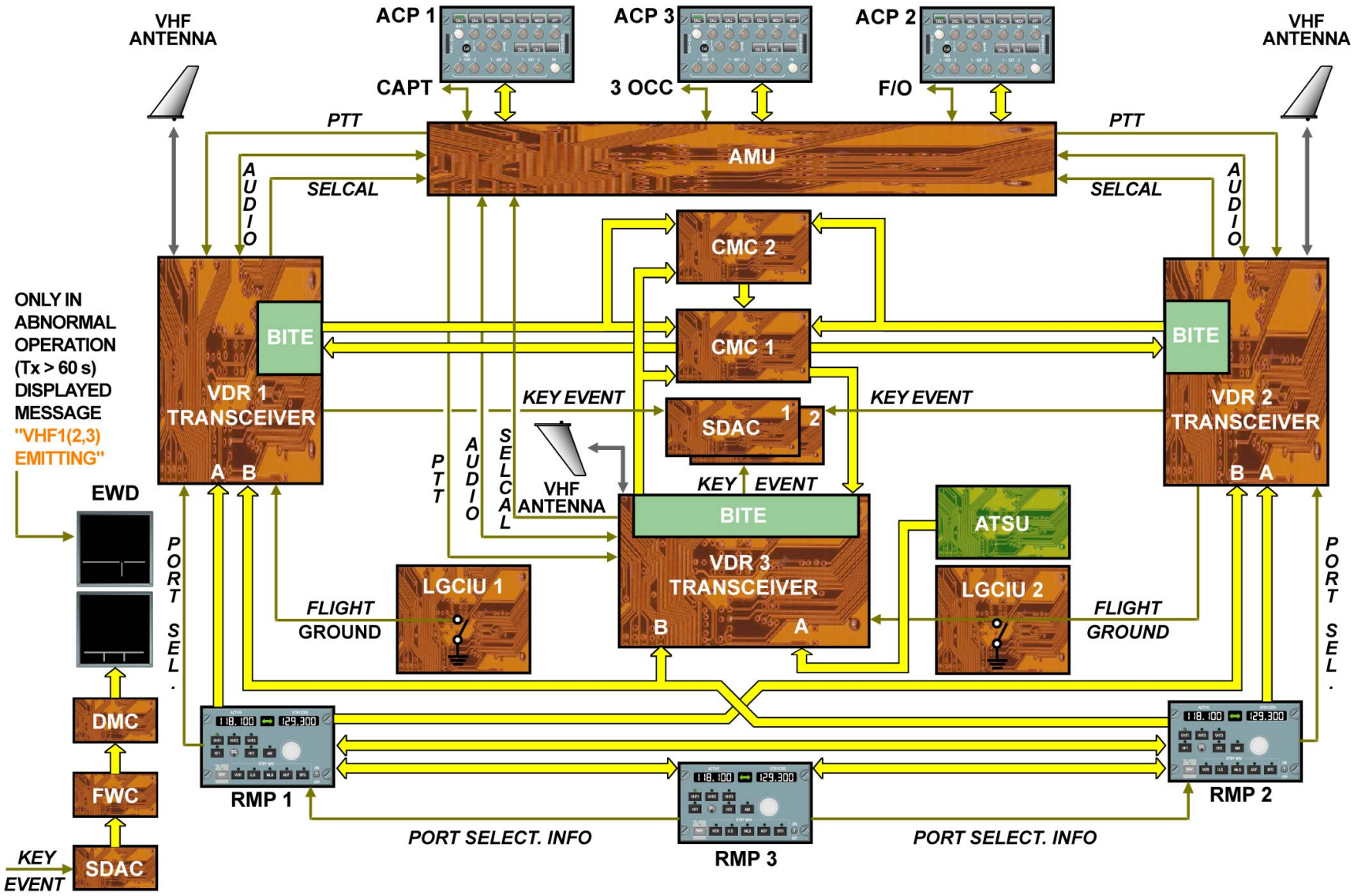

SYSTEM ARCHITECTURE - SELCAL

VHF D/O (3)

INTERFACE OF THE VDR TRANSCEIVERS

The VDR transceiver is linked to other systems through 3 types of lines:
- first, ARINC 429 buses with the RMPs (for tuning), and the Central Maintenance Computers (CMCs) (for failure transmission or test). An ARINC 429 High Speed (HS) is used between VDR 3 and the ATSU.
- second, discrete lines, from or to systems, the electrical level used by the KEY EVENT, the PTT key line, the FLIGHT/ GROUND status or the PORT SELECTION information is a ground/open circuit.
- third, analog lines are used for audio signals, sidetone and the SELCAL information.

DATA TRANSMISSION

Each VDR transceiver can operate in VOICE mode or DATA mode. In position 3 only, the VDR is active in DATA mode.
The ATSU sends data packages to the VDR 3 transceiver for modulation. The obtained VHF signal is then sent to the antenna for emission.
Upon receipt of VHF signals, the transceiver, when tuned on the selected frequency, transforms the signal into digital format, and transmits the data to the ATSU.
The ATSU automatically sets the VDR 3 transceiver into DATA mode by the VOICE/DATA selection discrete.
In abnormal operation, the switching between VOICE and DATA functions in the VDR 3 can be achieved by any RMP. In this case, the RMP sets the transceiver in VOICE mode via the VOICE/DATA selection information to the ATSU. Port B is then used for this operational mode.

CHARACTERISTICS

The VDR transceiver complies with ARINC 716 standards:
TRANSMITTER:
- rf output power: 25W (nominal),
- output impedance: 50 Ohms,
- power supply: 28 VDC,

FREQUENCY RANGE:
- 118.000Mhz to 137.975Mhz, with 8.33Khz spacing between channels.

G7508471 - G7OT0T0 - FM23D300000002

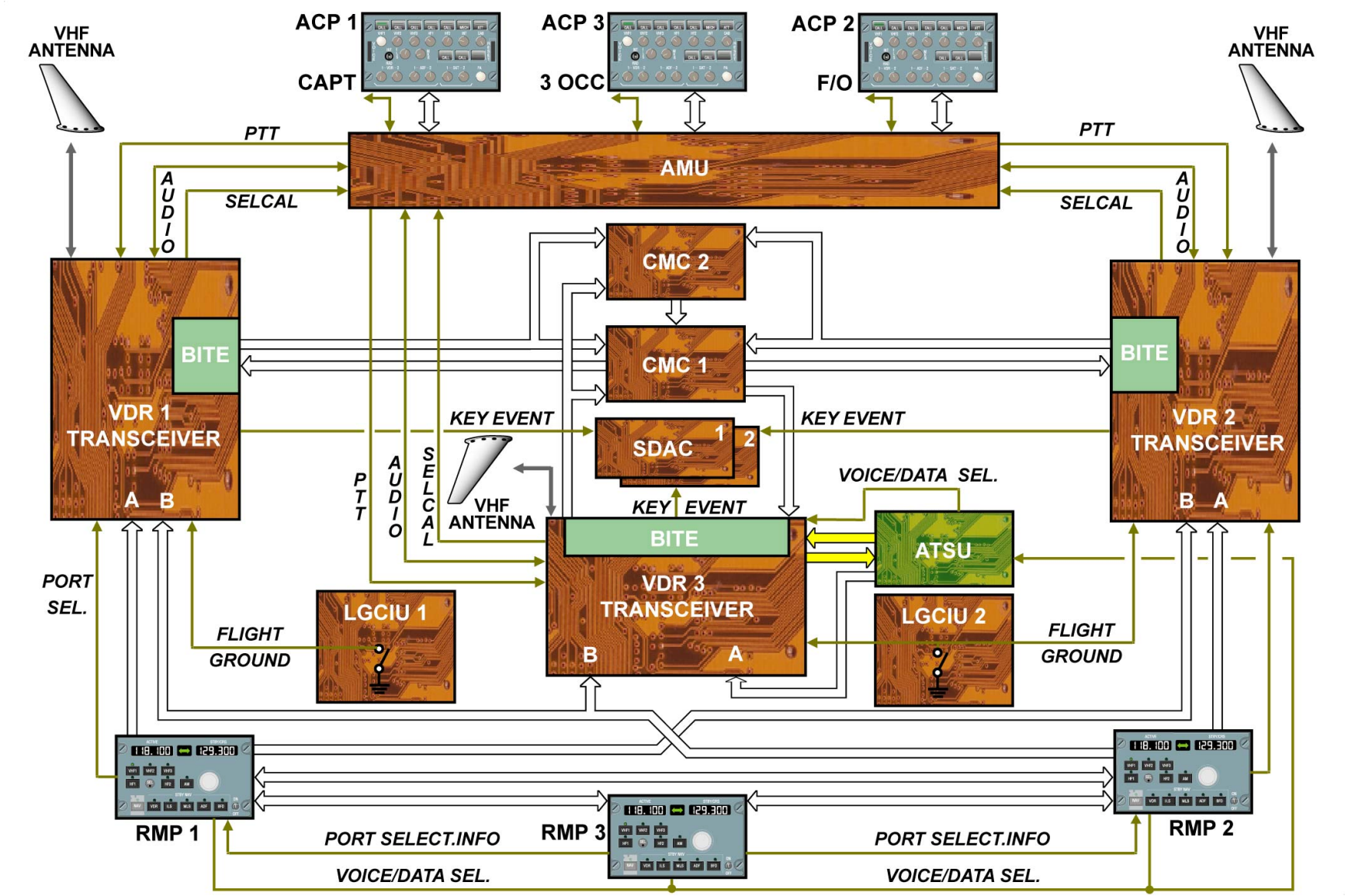

INTERFACE OF THE VDR TRANSCEIVERS - DATA TRANSMISSION & CHARACTERISTICS

G7508471 - G7OT0T0 - FM23D300000002

AUDIO MANAGEMENT D/O (3)

AUDIO MANAGEMENT UNIT ARCHITECTURE

The objective of this topic is to describe the Audio Management Unit (AMU) architecture.

GENERAL

The AMU comprises:
- audio cards,
- three cockpit amplifier cards,
- a SELCAL/BITE card,
- a flight interphone card,
- an emergency function.

The audio cards are:
- the CAPT audio card,
- the F/O audio card,
- the 3rd occupant audio card,
- the optional 4th and 5th occupant audio cards.

The cockpit amplifier cards are:
- the CAPT amplifier,
- the F/O amplifier,
- the Emergency cockpit amplifier.

AUDIO CARD FUNCTIONS

The audio cards provide the following functions:
- the transmission, reception and volume adjustment for radio, interphone and passenger announcements,
- processing,
- ARINC transmission and reception,
- power supply.

COCKPIT AMPLIFIER CARDS

The cockpit amplifier cards ensure the amplification, through loudspeakers, for the audio signals from and to the CAPT and F/O. They also amplify warning signals from the Flight Warning Computers (FWCs) and the Enhanced Ground Proximity Warning System (EGPWS). The muting function is done by the cockpit amplifiers.

SELCAL CALL/BITE CARD

The SELCAL CALL/BITE card provides the following functions:
- the decoding of selective calls,
- comparison between the received code and the code setting on the SELCAL control panel,
- identification of discrete attendant calls and mechanic calls,
- transmission of calls to the FWC and to Audio Control Panels (ACPs) via the corresponding audio cards,
- call cancellation and system re-initialization after a call, when a reset action is performed,
- the BITE circuit generates a message which gives the installation status of certain equipment.

The SELCAL CALL/BITE card also decodes the pin-programming in order to send the options/status information to the audio cards, the ACPs and the Central Maintenance System (CMS).

FLIGHT INTERPHONE CARD

The flight interphone card provides audio links between the various crew stations in the cockpit, between the cockpit and the ground crew (external power control panel) and between the cockpit and the avionics compartment (INPUT 6).

EMERGENCY SWITCHING

The emergency switching allows acoustic equipment to be switched, from CAPT or F/O, to the 3rd occupant audio card. The emergency switching also switches the audio and warning signals to the 3rd occupant cockpit amplifier card.

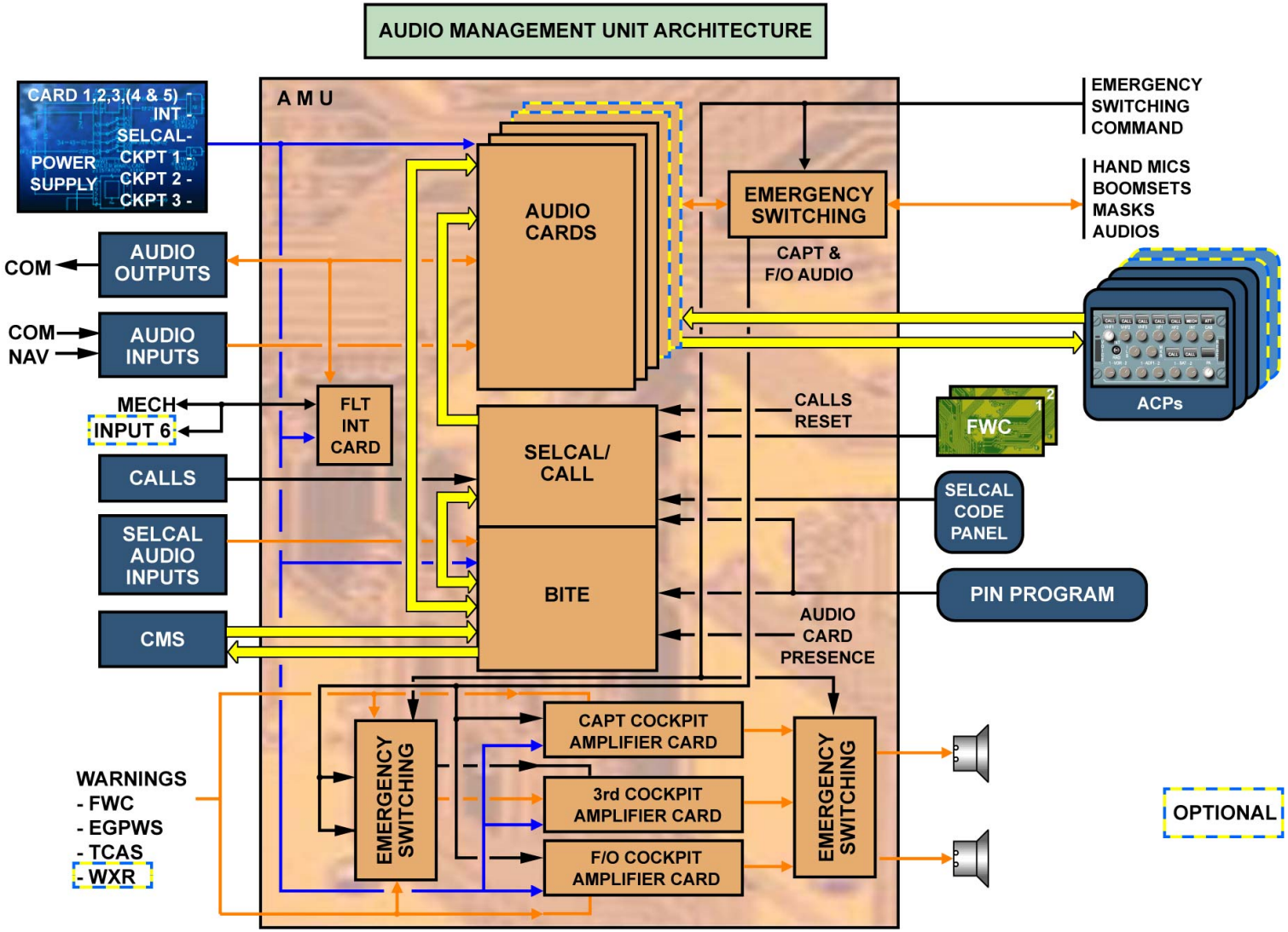

AUDIO MANAGEMENT UNIT ARCHITECTURE - GENERAL ... EMERGENCY SWITCHING

G7508471 - G7OT0T0 - FM23D500000002

AUDIO MANAGEMENT D/O (3)

AUDIO SWITCHING D/O

The objective of this topic is to describe in detail the emergency AUDIO SWITCHING in case of CAPT or F/O audio channel failure.

GENERAL

In case of emergency, there are two ways to recover a failure of the CAPT or F/O audio channel:
- the automatic emergency mode,
- the manual emergency mode.

An audio switching selector, located on the center pedestal, is used in manual mode. When manual audio switching is done, "AUDIO SWITCHING" is displayed on the ECAM right memo.

G7508471 - G7OT0T0 - FM23D500000002

AUDIO SWITCHING SELECTOR

In case of emergency, there are two emergency ways to recover a failure of the CAPT or F/O audio channel:
- the automatic emergency mode and,
- the manual emergency mode.

AUDIO SWITCHING D/O - GENERAL

AUDIO MANAGEMENT D/O (3)

AUDIO SWITCHING D/O (continued)

AUTOMATIC EMERGENCY MODE

In case of failure of the ACP or ACP-AMU connection, the audio channel concerned, in the AMU, automatically switches to the automatic emergency mode. This mode does not affect the warning indication function.
This mode consists in defining a preprogramming configuration for the reception level controls and radio transmission selection, until the manual emergency mode is selected. Preprogrammed level in reception:
- very High Frequency Data Radio 1 (VDR1): 5mW,
- high Frequency Data Radio 1 (HFDR1): 5mW,
- int: 5mW,
- pre-programmed transmission system selection: INTERPHONE (INT).

In case of failure of the DC Essential bus (401PP), an ECAM Message is triggered. The crew turns the switch (135 VU), to activate both relays and to supply Audio Card 1 or Audio Card 2 on the DC Normal Bus (101 PP).

G7508471 - G7OT0T0 - FM23D500000002

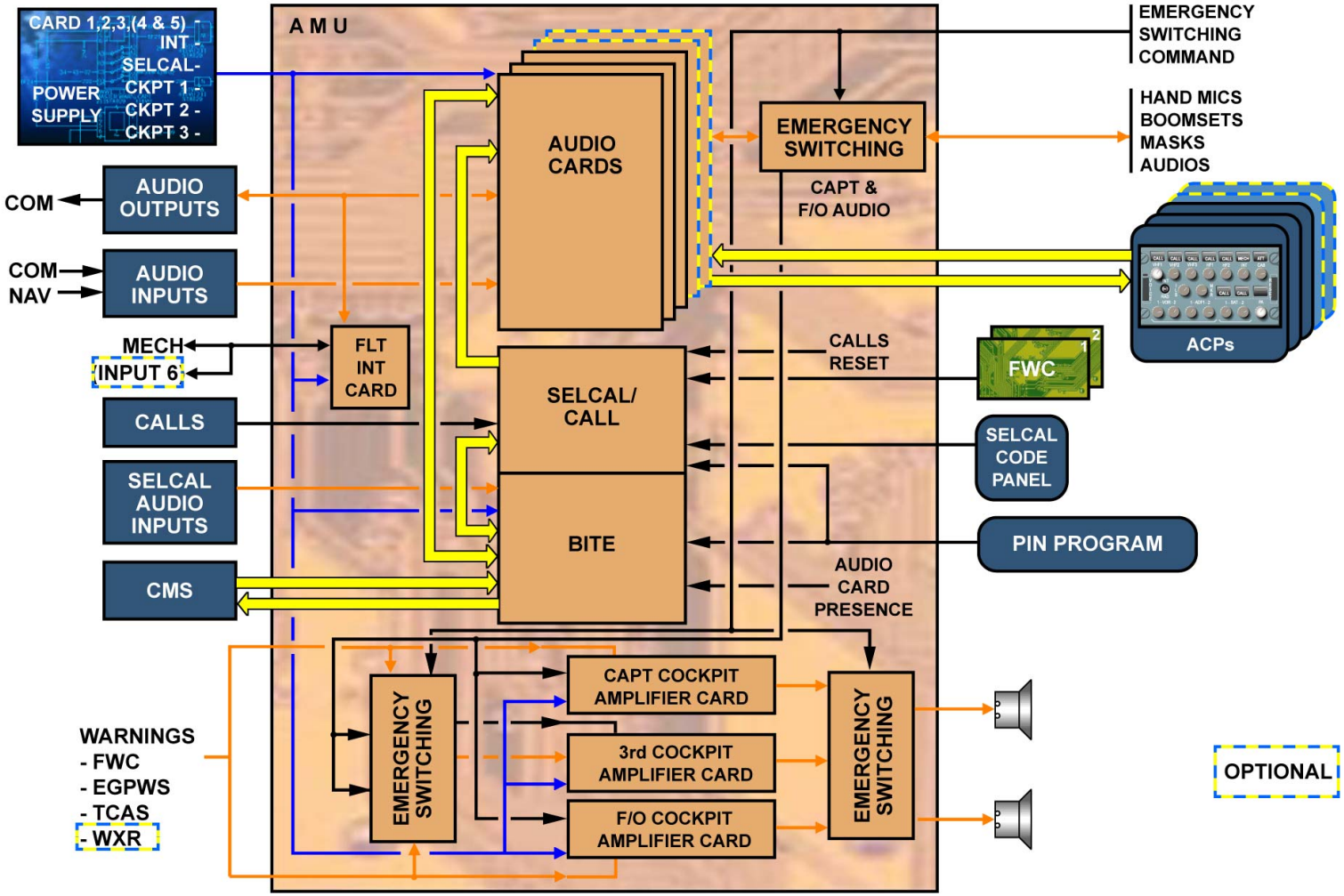

AUDIO SWITCHING D/O - AUTOMATIC EMERGENCY MODE

G7508471 - G7OT0T0 - FM23D500000002

AUDIO MANAGEMENT D/O (3)

AUDIO SWITCHING D/O (continued)

MANUAL EMERGENCY MODE 1 BOOMSET RECEPTION

In normal reception operation, each boomset is connected to its reception channel.
In reception, with a failure of the CAPT channel, setting the audio switching selector to the CAPT ON 3 position, switches the CAPT channel to the third occupant channel. The CAPT channel is in parallel with the 3rd occupant channel.
In reception, with a failure of the F/O channel, setting the audio switching selector to the F/O ON 3 position, switches the F/O channel to the third occupant channel. The F/O channel is in parallel with the 3rd occupant channel.

G7508471 - G7OT0T0 - FM23D500000002

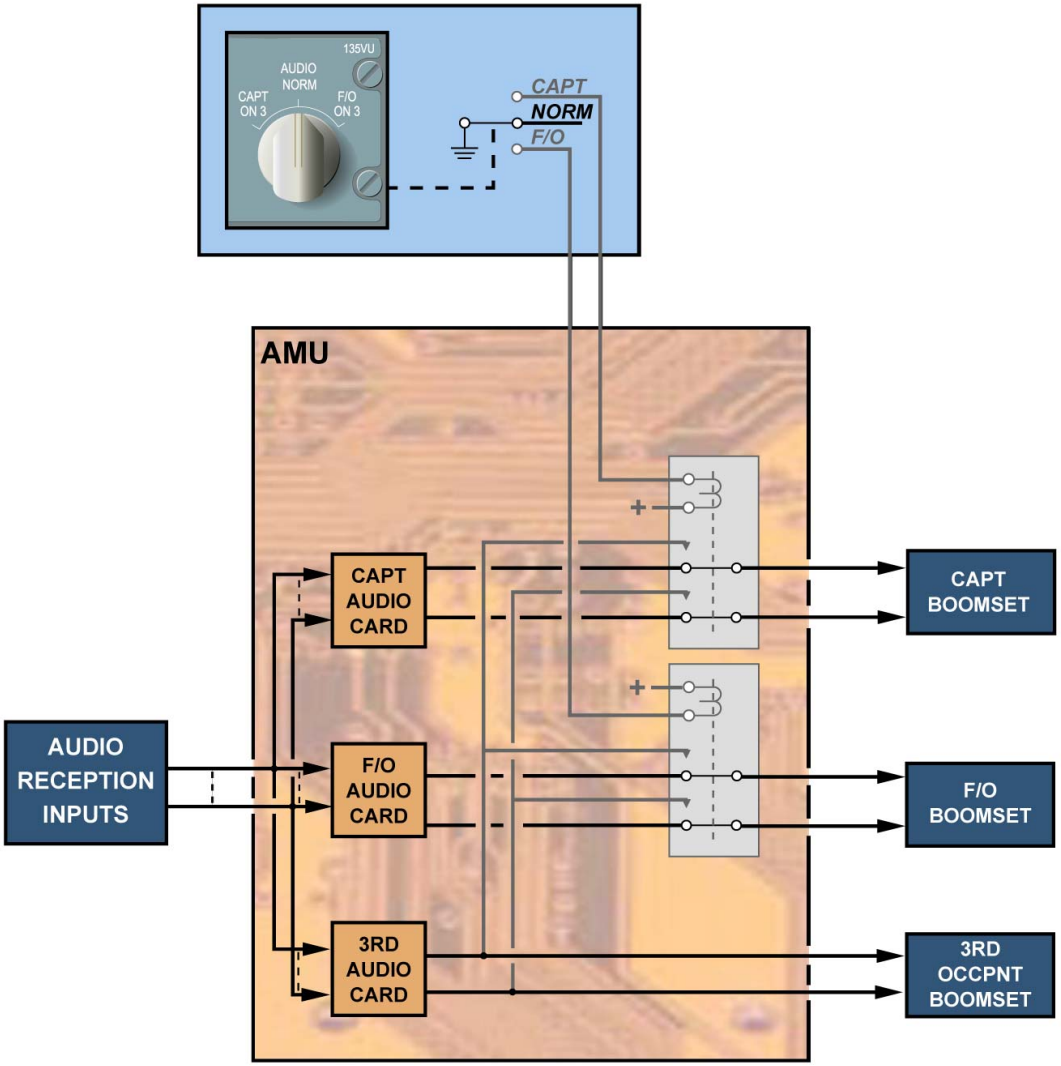

AUDIO SWITCHING D/O - MANUAL EMERGENCY MODE 1 BOOMSET RECEPTION

G7508471 - G7OT0T0 - FM23D500000002

AUDIO MANAGEMENT D/O (3)

AUDIO SWITCHING D/O (continued)

MANUAL EMERGENCY MODE 2 TRANSMISSION

In normal transmission operation, each channel is connected to its microphone amplifier.
In transmission mode with a failure of the CAPT channel, setting the audio switching selector to the CAPT ON 3 position, switches the CAPT microphone to the third occupant microphone amplifier. The microphone of the 3rd occupant is disconnected from the 3rd occupant microphone amplifier. The CAPT microphone is connected to the 3rd occupant microphone amplifier.
In transmission mode, with a failure of the F/O channel, setting the audio switching selector to the F/O ON 3 position, switches the F/O microphone to the 3rd occupant microphone amplifier. The microphone of the 3rd occupant is disconnected from the 3rd occupant microphone amplifier. The F/O microphone is connected to the 3rd occupant microphone amplifier.

G7508471 - G7OT0T0 - FM23D500000002

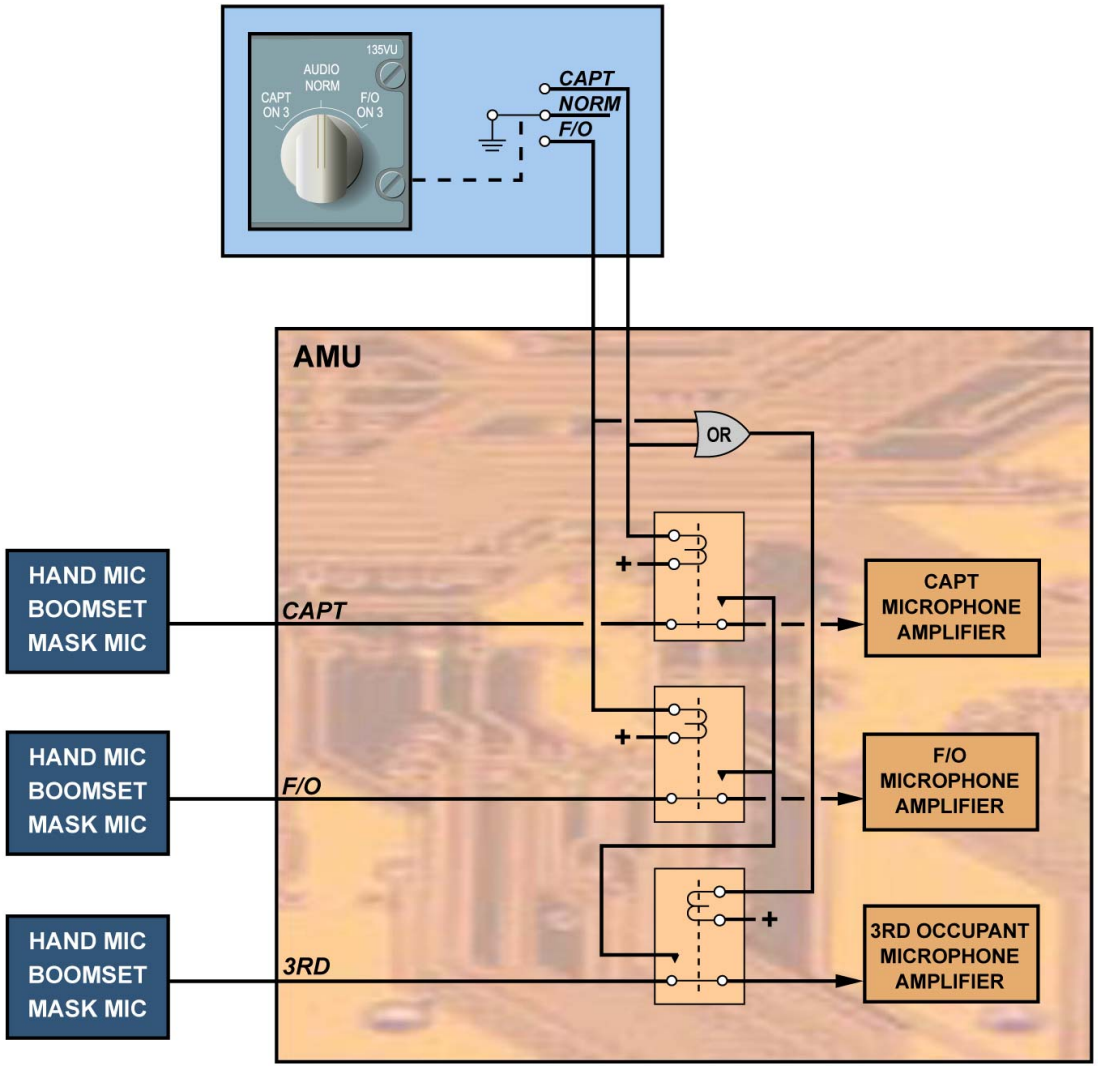

AUDIO SWITCHING D/O - MANUAL EMERGENCY MODE 2 TRANSMISSION

G7508471 - G7OT0T0 - FM23D500000002

AUDIO MANAGEMENT D/O (3)

AUDIO SWITCHING D/O (continued)

MANUAL EMERGENCY MODE 3 LOUDSPEAKERS

In normal operation, the CAPT audio card is connected to the left cockpit loudspeaker, through the CAPT cockpit amplifier. The F/O audio card is connected to the right cockpit loudspeaker, through the F/O cockpit amplifier. WARNING 1 is connected to CAPT cockpit amplifier. WARNING 2 is connected to F/O cockpit amplifier.
In case of a failure of the CAPT channel, setting the audio switching selector to the CAPT ON 3 position, switches the left cockpit loudspeaker to the emergency cockpit amplifier. WARNING 1 is connected to emergency cockpit amplifier. WARNING 2 is connected to F/O cockpit amplifier.
In case of a failure of the F/O channel, setting the AUDIO SWITCHING selector to the F/O ON 3 position, switches the right cockpit loudspeaker to the emergency cockpit amplifier. WARNING 1 is connected to CAPT cockpit amplifier. WARNING 2 is connected to emergency cockpit amplifier.

G7508471 - G7OT0T0 - FM23D500000002

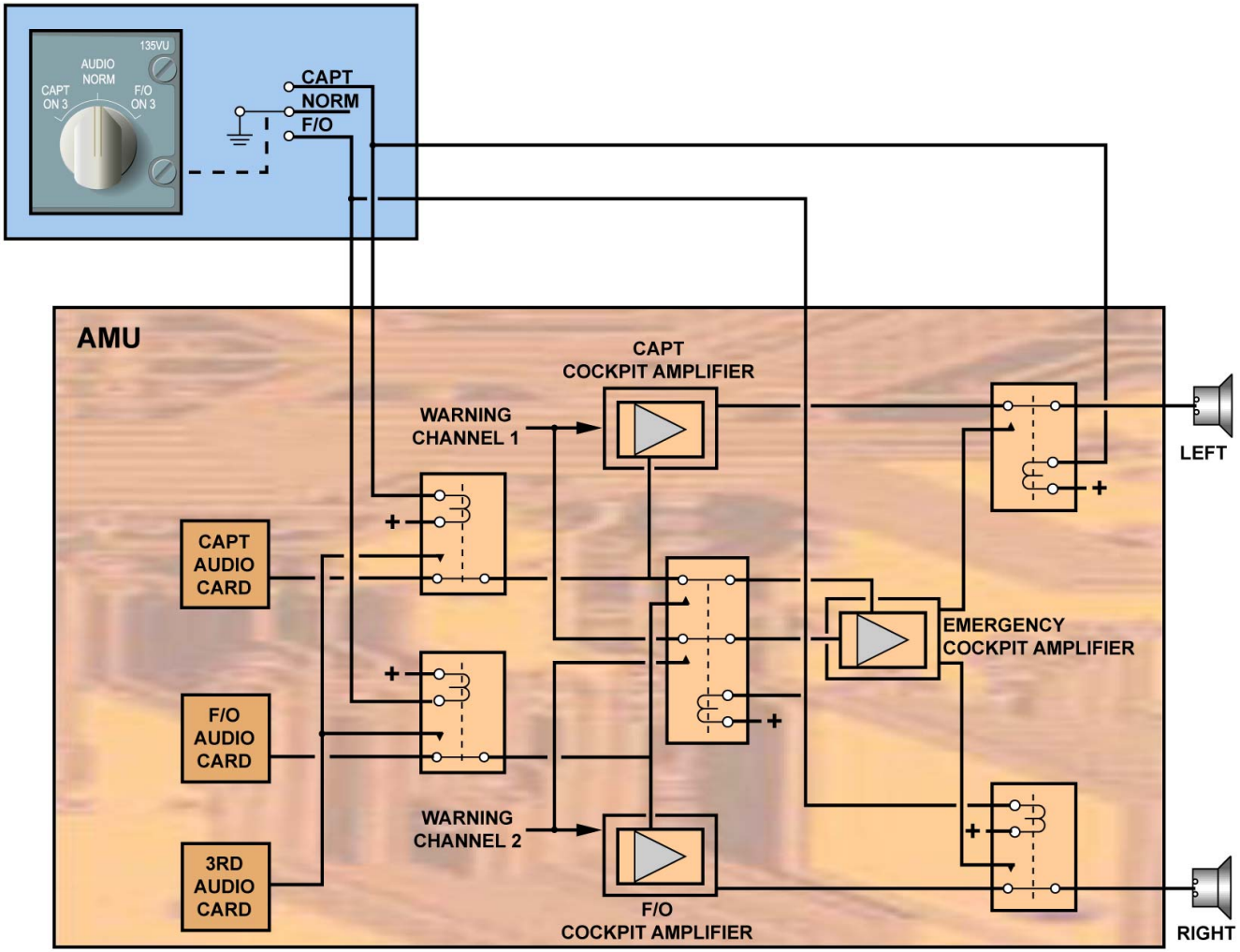

AUDIO SWITCHING D/O - MANUAL EMERGENCY MODE 3 LOUDSPEAKERS

G7508471 - G7OT0T0 - FM23D500000002

AUDIO MANAGEMENT D/O (3)

SELCAL/CALL D/O

The objective of this topic is to describe in detail the SELCAL and CALL functions.

GENERAL

The SELCAL and CALL functions are performed in the AMU by the SELCAL/CALL card. This card receives SELCAL calls from the ground stations via the communication channels, a SELCAL code from the SELCAL code panel, CALLs from the ground crew and the attendant stations and provides visual and aural warnings. The SELCAL card also sends information about the pin programming options to the audio cards and the ACPs.

OPERATION

The SELCAL/CALL card has 7 inputs. These inputs are permanently scanned, and when a SELCAL signal is present, a comparison is made with the code programmed on the SELCAL code panel.
When the 2 codes agree, a message is sent to the various ACPs, via the related audio cards. On the ACPs, the CALL light, related to the communication channel used, flashes amber.
At the same time, data is sent to the FWCs.
The FWCs send an audio call buzzer to the loudspeakers, through the cockpit amplifier in the AMU.
The CALL is cancelled using the RESET key on one ACP, or by selecting the called channel and activating the Push To Talk (PTT).

G7508471 - G7OT0T0 - FM23D500000002

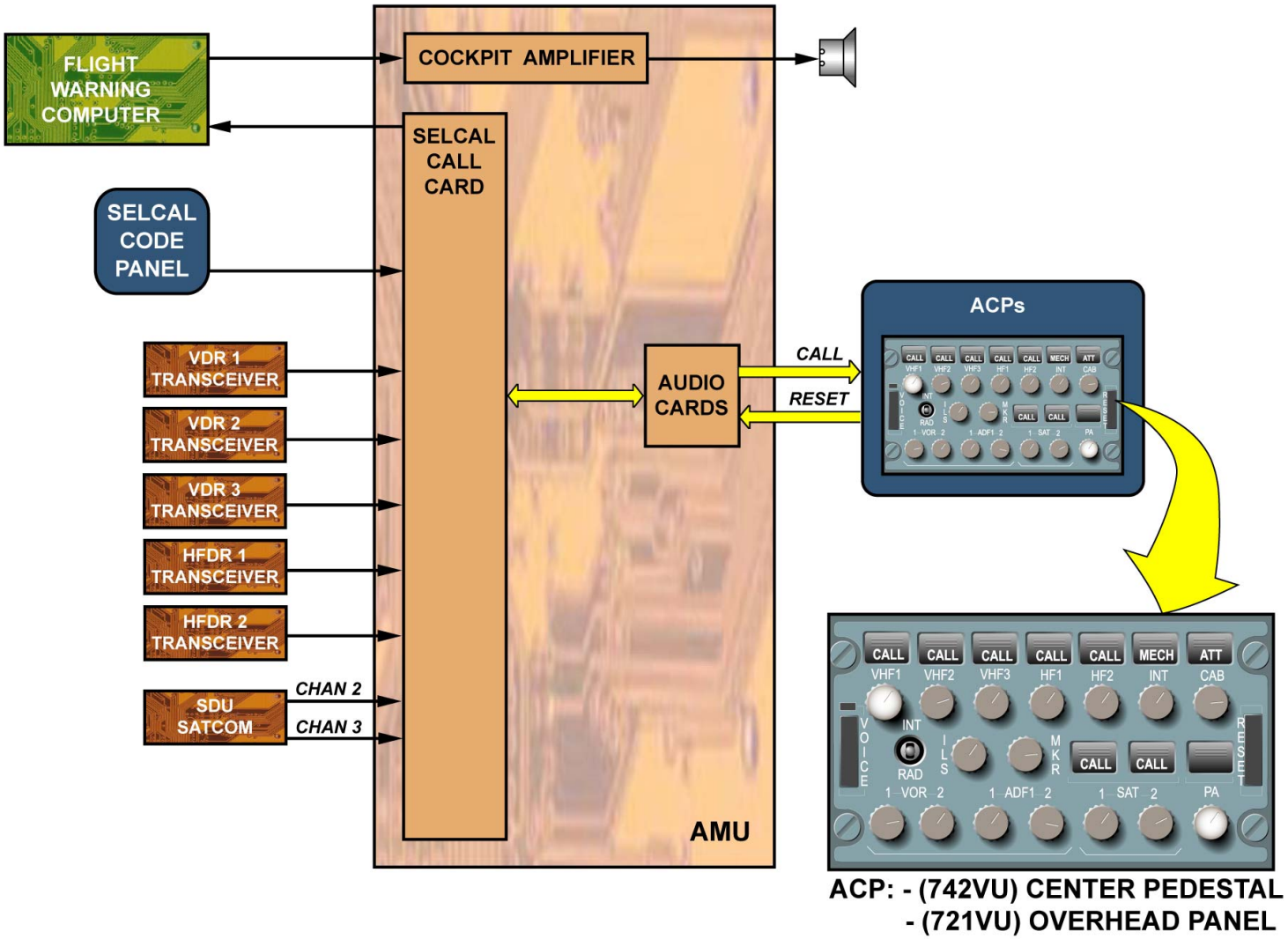

SELCAL/CALL D/O - GENERAL & OPERATION

AUDIO MANAGEMENT D/O (3)

SELCAL/CALL D/O (continued)

GROUND CALL

Two types of call may be received by the SELCAL CALL card:
- a ground call,
- a cabin attendant call.

When the COCKPIT CALL P/B, located on the EXTernal PoWeR control panel, is pressed a discrete signal is sent to the SELCAL CALL card and to the FWC. The FWC activates the buzzer signal and sends it to the cockpit amplifiers in the AMU to be broadcast through the loudspeakers.
The SELCAL card sends a signal through the various audio cards to the ACPs. The MECH legend flashes amber for 60 seconds on the ACPs. The visual call is automatically cancelled and the circuit is reinitialized after 60 seconds (According to company policy) or when the RESET P/B is pressed on any ACP. The automatic reset may be cancelled with the AMU pin programming.

ATTENDANT CALL

When a call is made from a cabin attendant station, the Cabin Intercommunication Data System (CIDS) sends a discrete signal to the SELCAL/CALL card and to the FWC.
The FWC activates the buzzer signal and sends it to the cockpit amplifier in the AMU to be broadcast through the loudspeakers.
The SELCAL CALL card sends a signal through the various audio cards to the ACPs. The ATT legend flashes for 60 seconds on the ACPs. The visual call is automatically cancelled and the circuit reinitialized after 60 seconds or when the RESET P/B is pressed, on any ACP. Information is also sent to the CIDS for reinitialization.
The automatic reset may be cancelled with the AMU pin programming.

G7508471 - G7OT0T0 - FM23D500000002

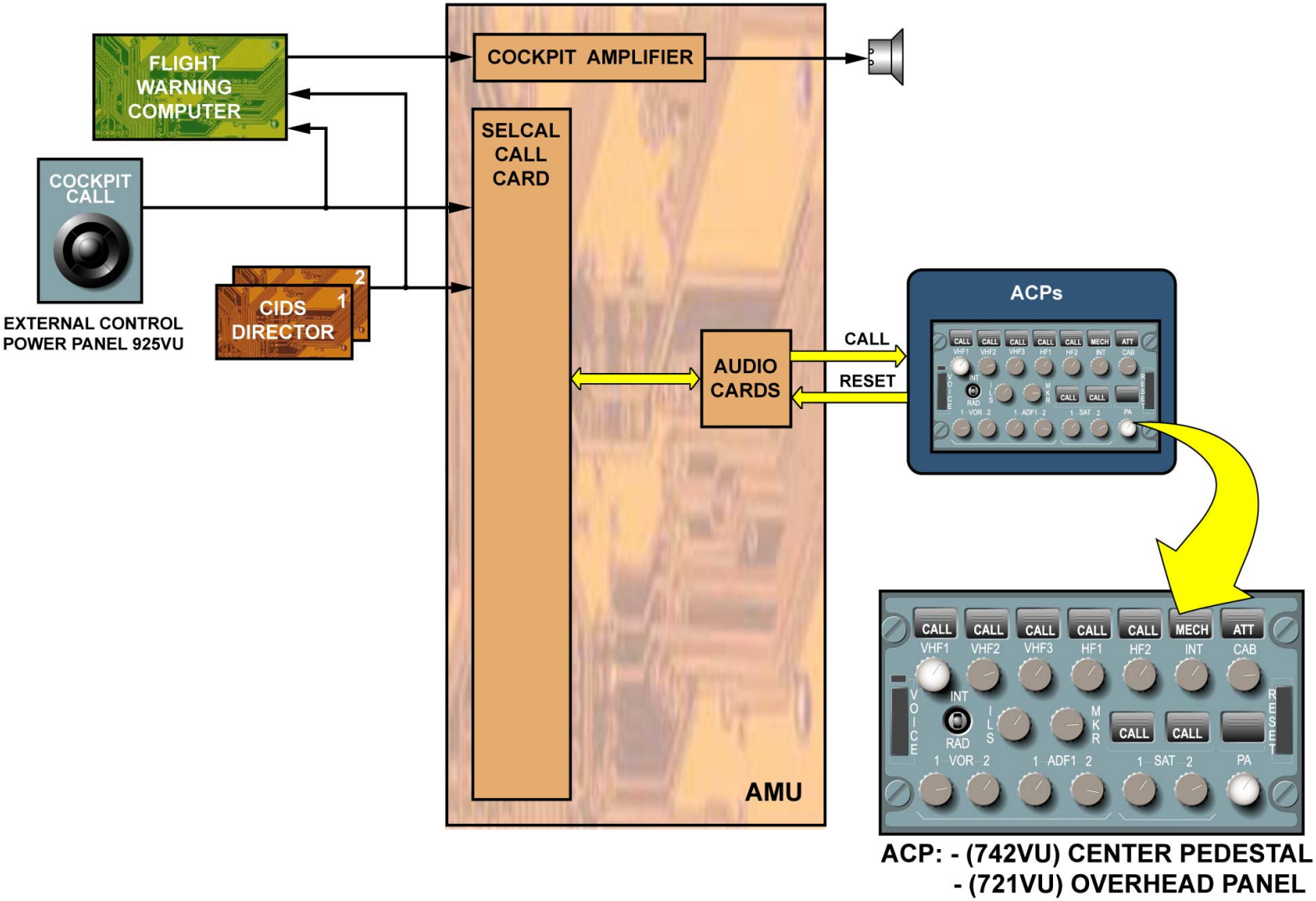

SELCAL/CALL D/O - GROUND CALL & ATTENDANT CALL

SATELLITE COMMUNICATION D/O (3)

GENERAL

The SATCOM system provides satellite communication for cockpit and cabin. It supports DATA and VOICE communications.
The SATCOM system is composed of two subsystems: the avionics subsystem and the antenna subsystem.

AVIONICS SUBSYSTEM

The main components of the SATCOM avionics subsystem are:
- the Satellite Data Unit (SDU),
- the High Speed Data Unit (HSDU)
- the Radio Frequency Unit (RFU),
- the High Power Amplifier (HPA).

The SDU and RFU provide all essential services required to accommodate effective air/ground communications, via satellite, using the antenna and related RF components.
The SDU manages the RF link protocols on the satellite side and provides the appropriate interface with the avionics subsystem for communication management.
The HPA boosts the signal to be transmitted to the satellite.

ANTENNA SUBSYSTEM

The main components of the SATCOM antenna subsystem are:
- the Diplexer/Low Noise Amplifier (D/LNA),
- the Beam Steering Unit (BSU),
- the High Gain Antenna (HGA).

The D/LNA provides segregation between transmitted and received signals and amplification of the received signal.
The BSU controls the pointing of the antenna.
The HGA transmits and receives L-band RF signals to and from the satellite the BSU is pointed at.

INTERFACES

The SATCOM avionics subsystem is mainly connected to:
- the Air Data/Inertial Reference System (ADIRS) for antenna control steering and Doppler correction,
- the Air Traffic and Information Management System (ATIMS) for cockpit data transmission,
- the audio management system for cockpit voice communication,
- the Passenger Air-to-ground Telephone System (PATS) for cabin fax/telephone capabilities.

The 115 VAC bus 2 electrically supplies all SATCOM elements. The SDU and RFU are on the same circuit breaker: 1RV.The HPA, D/LNA and BSU are on the same circuit breaker: 3RV.The BSU supplies the HGA.

G7508471 - G7OT0T0 - FM23D400000002

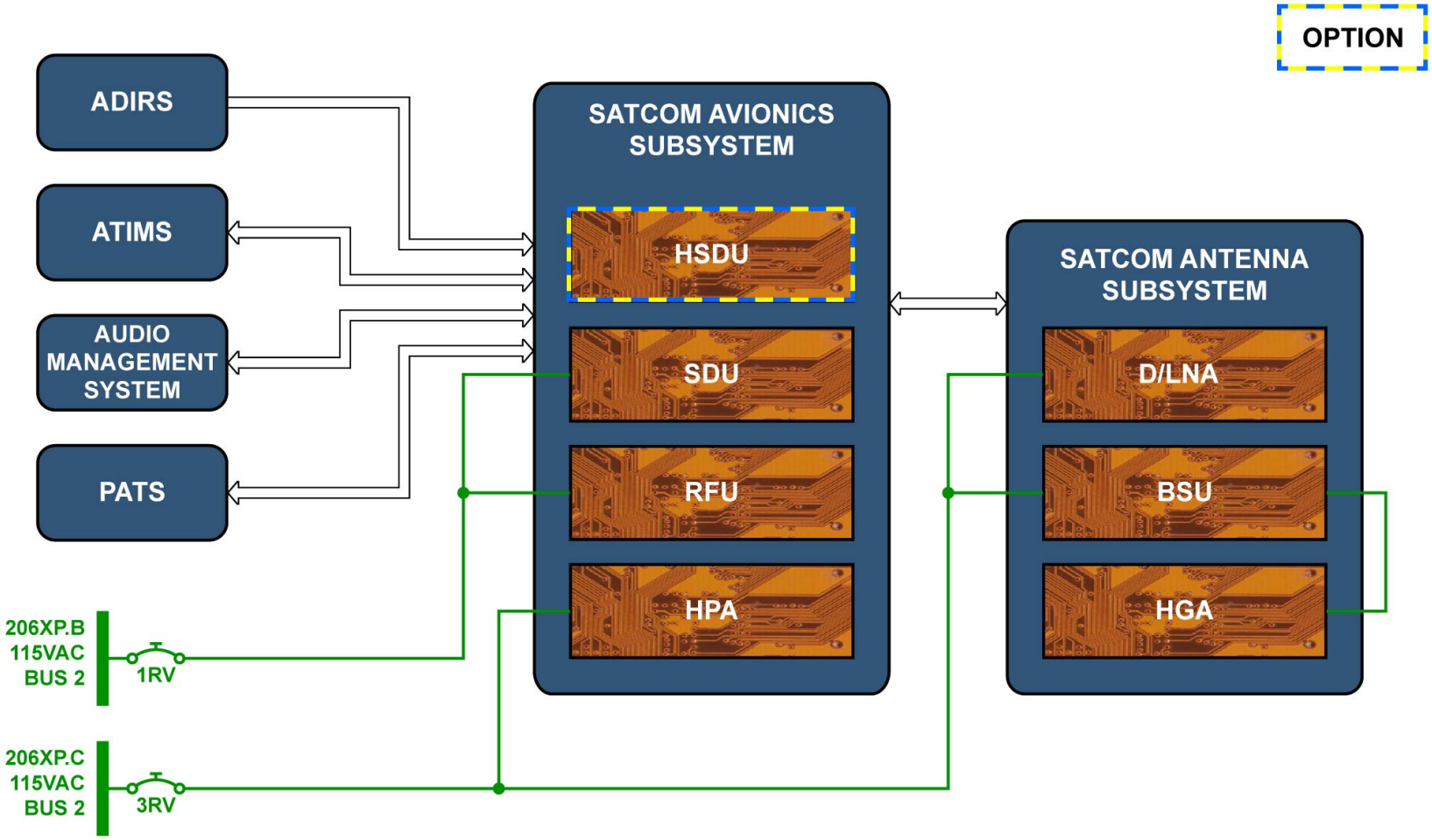

ADIRS: Air Data/Inertial Reference System
ATIMS: Air Traffic and Information Management System
PATS: Passenger Air-to-ground Telephone System

L-band radio frequencies:
Transmission: from 1.6255 GHz to 1.6605 GHz
Reception: from 1.5300 GHz to 1.5590 GHz

GENERAL - AVIONICS SUBSYSTEM ... INTERFACES

SATELLITE COMMUNICATION D/O (3)

DESCRIPTION

The SDU is the main processing element of the SATCOM avionics. It controls and monitors the aircraft satellite communication:
- controlling timing functions,
- performing voice and data digitizing,
- performing coding/decoding functions,
- defining system protocols,
- providing other system interfacing.

SATELLITE DATA UNIT (SDU)

The SDU is connected to:
- the Audio Management Unit (AMU) for cockpit voice communication,
- the Air Traffic and Service Unit (ATSU) for system and maintenance data reports,
- the Cabin Telecommunication Unit (CTU) for cabin voice/data telecommunication with the ground,
- the MCDUs for control and monitoring of the SATCOM system,
- the Air Data/Inertial Reference Units (ADIRUs) to provide relative azimuth and relative elevation for optimum reception and transmission,
- the Multipurpose Disk Drive Unit (MDDU) through the Data Loading Routing Box (DLRB) for data loading of the Owner Requirement Table (ORT),
- the Central Maintenance Computers (CMCs) for BITE information and system tests.

The SDU contains a maximum of 6 channels,1 for ATSU, 2 for cockpit voice and 3 for cabin voice/data communications, capable of providing simultaneous full duplex operation.

HIGH SPEED DATA UNIT (HSDU)(OPTION)

Optionally, the HSDU splits/combines internally its RF reception/transmission with the SDU RF reception/transmission. It transmits and receives data for cabin internet based application (mail, web browsing,...).
The High speed SATCOM uses the HPA resources to transmit data to the satellite. The Swift64 services may differ according to the cabin. The HSDU channels available and the services in use can be check on the MCDU. This information is available on the "HSD CHANNEL STATUS" page adjacent to the line key 5L.

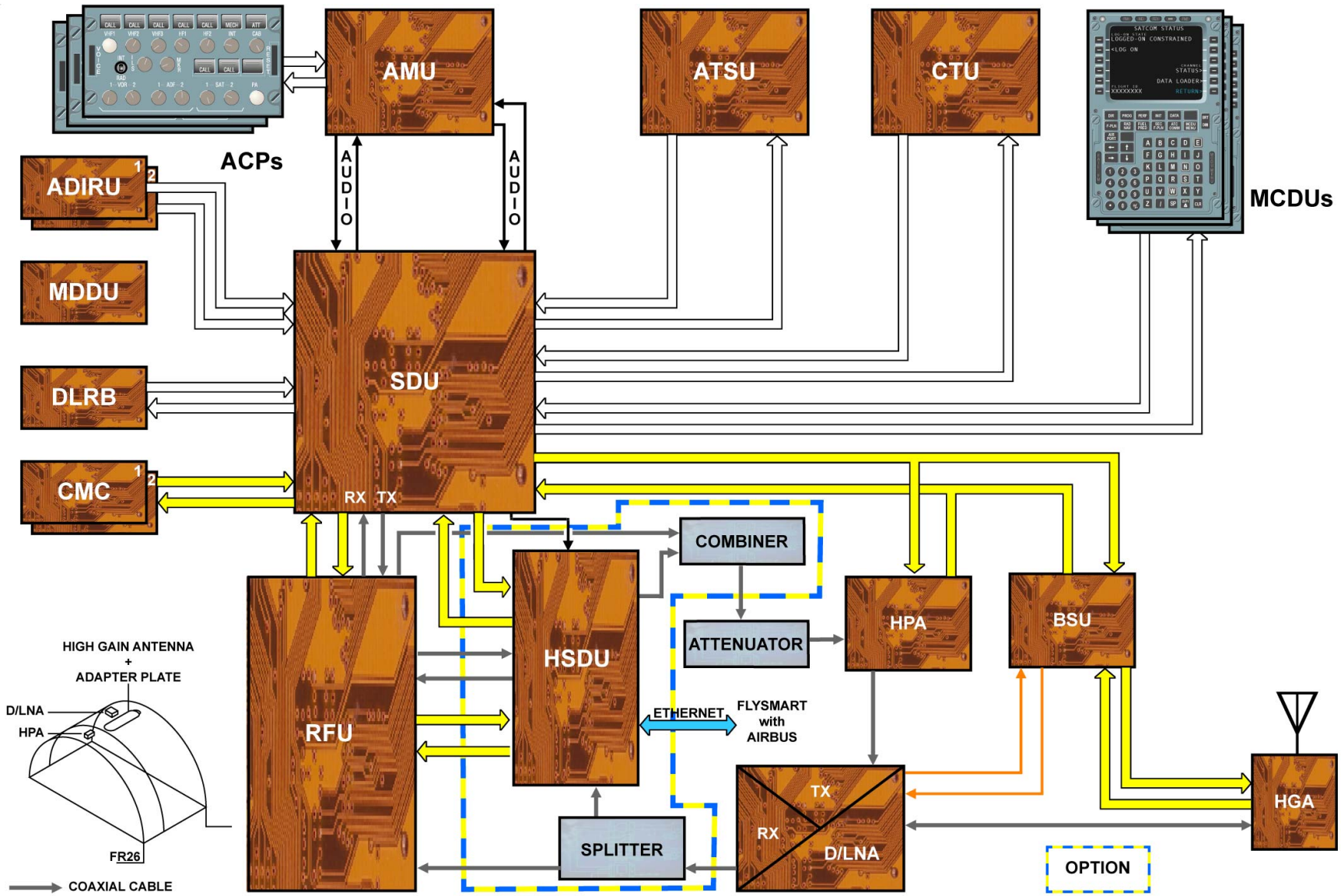

DESCRIPTION - SATELLITE DATA UNIT (SDU) & HIGH SPEED DATA UNIT (HSDU)(OPTION)

G7508471 - G7OT0T0 - FM23D400000002

SATELLITE COMMUNICATION D/O (3)

DESCRIPTION (continued)

RADIO FREQUENCY UNIT (RFU)

The RFU converts intermediate frequency (IF) signals from SDU to L-band radio frequency signal for transmission to the satellite and vice-versa.
The transmission (Tx) signal is sent to the HPA through a variable attenuator, manually adjustable. The attenuator ensure a high quality signal transmission between RFU and HPA, following the quality of the signal, the HPA will determinate the transmission mode, data or voice. The reception (Rx) signal is received from the D/LNA.
Fault status information of the RFU is connected to CMCs via the SDU.

HIGH POWER AMPLIFIER (HPA)

The HPA is only used for signal transmission.
The high power amplifier amplifies the RFU-generated L-band signal to the appropriate power level required to maintain the air-to-ground communication link. The power level is permanently adjusted in order to minimize the satellite power consumption. The linear HPA provides the required 80 watts maximum power output.
To perform the power adjustment, the HPA receives beam information from the SDU.
Fault status information of the HPA is connected to CMCs via the SDU.

DIPLEXER/LOW NOISE AMPLIFIER (D/LNA)

The Diplexer part segregates the Tx and Rx signals to allow duplex communications. It provides electrical isolation of the transmitted and received signals between the HPA and LNA.
In the chain of signal amplification, the LNA part provides the first stage of amplification and filtering of the Rx signal. After this process, the Rx signal is sent to the RFU.
The BITE of the D/LNA is performed by the BSU and SDU.

BEAM STEERING UNIT (BSU)

The BSU controls the pointing of the airborne antenna.
The BSU receives, from the SDU, aircraft azimuth and elevation and the satellite position.
It converts that data in order to control the electronic antenna to point its beam at the satellite.
The BITE of the BSU is performed by the SDU.

TOP-MOUNTED HIGH GAIN ANTENNA (HGA)

The HGA is top mounted with an adapter plate on the fuselage of the aircraft.
The HGA is an electronically steerable phased array. The BSU steer the antenna towards the satellite. It is linked to the HGA via an ARINC 429 bus.
Two bands are in use for simultaneous transmission and reception of satellite signals as a full duplex operation. The HGA sends to, and receives from, the D/LNA L-band radio frequencies through a coaxial cable.
The BITE of the HGA is performed by the SDU via BSU.

G7508471 - G7OT0T0 - FM23D400000002

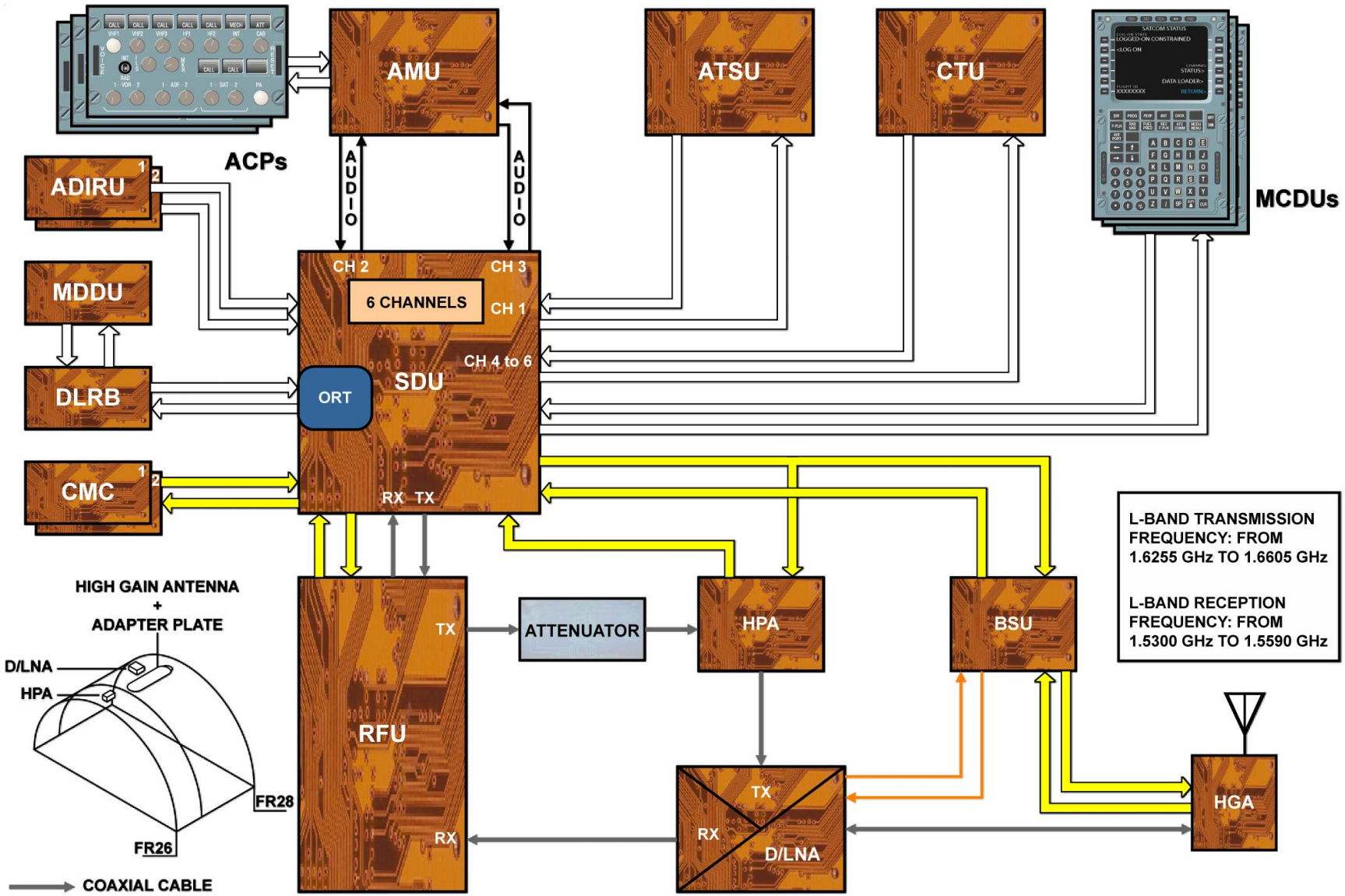

DESCRIPTION - RADIO FREQUENCY UNIT (RFU) ... TOP-MOUNTED HIGH GAIN ANTENNA (HGA)

G7508471 - G7OT0T0 - FM23D400000002

SATELLITE COMMUNICATION D/O (3)

OPERATION

Log-in is initiated by the SDU after selection of the log-on command on the MCDU SATCOM Menu.

LOG-IN PROCEDURE

PROGRAMMING

The SDU is programmed with two data tables. One called the ORT, contains information on all ground stations in each satellite region and the order of preference in which they are to be selected. The ORT is updated via the MDDU.
The second table, called the system table, contains system management and control information including all ground station channel frequencies and identifications and satellite positions. Each system table has a version number assigned to it.
The SDU is also programmed with a technical address, which is the «telephone number» of the aircraft. This technical address will become part of all messages sent.

COMMUNICATION LINK ESTABLISHMENT

The SDU carries out an initial search to find the best way to communicate with the ground.
The SDU receives aircraft position and orientation information from ADIRU 1. If ADIRU 1 doesn't send the information, the SDU will take the information from ADIRU 2.
BSU receive azimuth and elevation to direct the antenna towards the satellite.
The BSU convert azimuth and elevation commands into signals to direct the antenna towards the selected satellite.
Following the ORT and the system table, the SDU will select one by one the possible satellite and ground station it can connect to.
Each ground station continuously broadcasts a channel to inform users of system status and configuration. It also carries the time and frequency information needed by the aircraft wishing to log onto the system.
The SDU checks the quality of the received signal of each ground station tested, measuring strength and/or bit error rate. At the end of this procedure, the SDU selects the ground station corresponding to the best quality signal.

COMMUNICATION LOG-ON

The received ground station sends an electronic bulletin board, which also contains system table information. The SDU compares the version number of its system table with the received one. According to the content of the updated system table, the SATCOM may re-select the satellite at this point.
The SDU indicates to this ground station it has an updated system table and it is listening to it. The ground station identifies the aircraft by its technical address and registers the aircraft as operational in that region. At this point, the SATCOM is considered to be logged onto the system.

CALLS

CALL INITIALIZATION FROM AIRCRAFT

When an airborne subscriber initiates a call, the SDU sends a call request signal to the ground station. When the ground station receives the call request, it assigns a channel to the aircraft. The call can then go through. The assigned channels are reserved for as long as the call is in progress. The sequence used to initiate the call is automatic and transparent to both the originator and the receiver of the call.

SIGNAL PROCESS

The SDU combines all the received data from the AMU, ATSU and CTU in an IF Tx signal and sends it to the RFU.
The RFU converts signals from the SDU to a L-band radio frequency signal.

G7508471 - G7OT0T0 - FM23D400000002

The Tx signal follows the line to the antenna through the amplification chain to be transmitted to the satellite. The satellite will then route the signal to the ground station.
When the antenna receives information from the pointed satellite,the D/LNA will relay the Rx signal to the RFU. A conversion of the Rx L-band radio frequency signal is made into an IF Rx signal. The IF signal is sent to the SDU for demodulation and decoding. The SDU will then route the received signals to the concerned user.

REMARK

Calls initiated from the ground to a passenger are currently not allowed for safety reasons.

LOGON RENEWAL

If degradation or loss of the received signal is detected by the SDU after log on, the SDU will attempt to re-establish communication with its logged on ground station. If any signal is not received within 10 seconds, then the SDU will tune onto the next preferred ground station, referring to the ORT and the system table. During log on, renewal in the same satellite region, the flight information is not transmitted with the log on request.
If the channel of the next preferred ground station is not received within 10 seconds, the SDU will find itself logged off but will not transmit a log off request. Then the SDU will revert to a satellite search procedure.

COCKPIT VOICE

DIALING FEATURES

The use of the SATCOM cockpit voice facilities is made through the MCDU for dialing and the Audio Control Panel (ACP) for call establishment.
Two possibilities are offered to dial a number:
- pre-selected numbers, stored in the ORT and available under the DIRECTORY menu,
- manual dialing, using the scratchpad.

OUTGOING CALLS

Once the dialing is completed, SAT 1 (or 2) ACP transmission and reception keys must be selected. Green lines will flash during the call establishment.
When the call is established, these green lines become steady and the CONNECTED indication is displayed next to the channel selected.

INCOMING CALLS

Incoming calls to the flight crew are annunciated by the SELCAL buzzer (except if flight phase inhibition) and, on the ACP, by the flashing of the CALL legend of the SAT1 (SAT2) transmission pushbutton switch. In addition, on the SATCOM MAIN MENU, GROUND TO AIR CALL is displayed upon the concerned channel (SAT1 or SAT2), with the associated priority.
To answer the call, select the SATCOM channel on the SAT1 (SAT2) on the ACP. The green line on the SAT1 (SAT2) reception pushbutton switch comes on (steady).

FAILURE MONITORING

The SDU is interfaced with the CMC for BITE purposes via an ARINC 429 bus.
The RFU, HPA and BSU can be tested through the SDU via ARINC 429 buses. The BSU also provides HGA and D/LNA status.
When a ground-to-air SATCOM call with high priority (1,2 or 3) is set up, the Flight Warning Computer (FWC) generates the SATCOM ALERT memo on the ECAM.
The warning SATCOM FAULT is set up in case of SATCOM voice and data transmission failure.
The warning SATCOM VOICE FAULT is displayed in case of SATCOM voice transmission failure.

G7508471 - G7OT0T0 - FM23D400000002

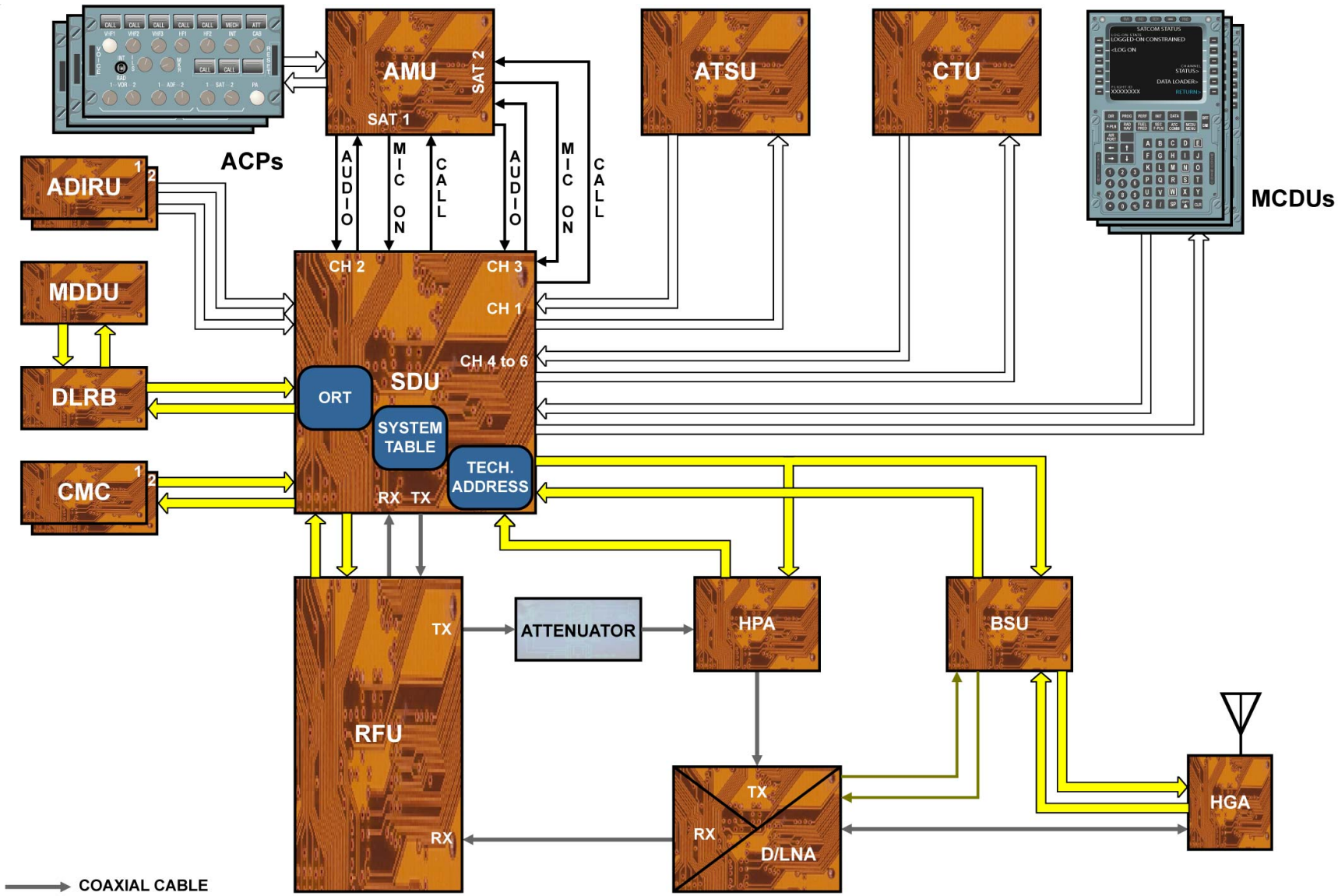

OPERATION - LOG-IN PROCEDURE ... FAILURE MONITORING

G7508471 - G7OT0T0 - FM23D400000002

This Page Intentionally Left Blank

G7508471 - G7OT0T0 - FM23D400000002

SATELLITE COMMUNICATION D/O (3)

LOW GAIN ANTENNA (LGA) (OPTION)

On the basis of this architecture, a Low Gain Antenna (LGA) can be installed. The LGA system permits low rate transmission of data, in case of failure of the high gain antenna subsystem. This subsystem cannot ensure high rate data transmission or voice telecommunication.
The splitter is used to distribute the Tx signal to both the high gain system and the low gain system.
The combiner combines the Rx signals from the two D/LNAs before sending them to the RFU.
Note that the LGA doesn't need a BSU. The LGA is omnidirectional and non-adjustable.

G7508471 - G7OT0T0 - FM23D400000002

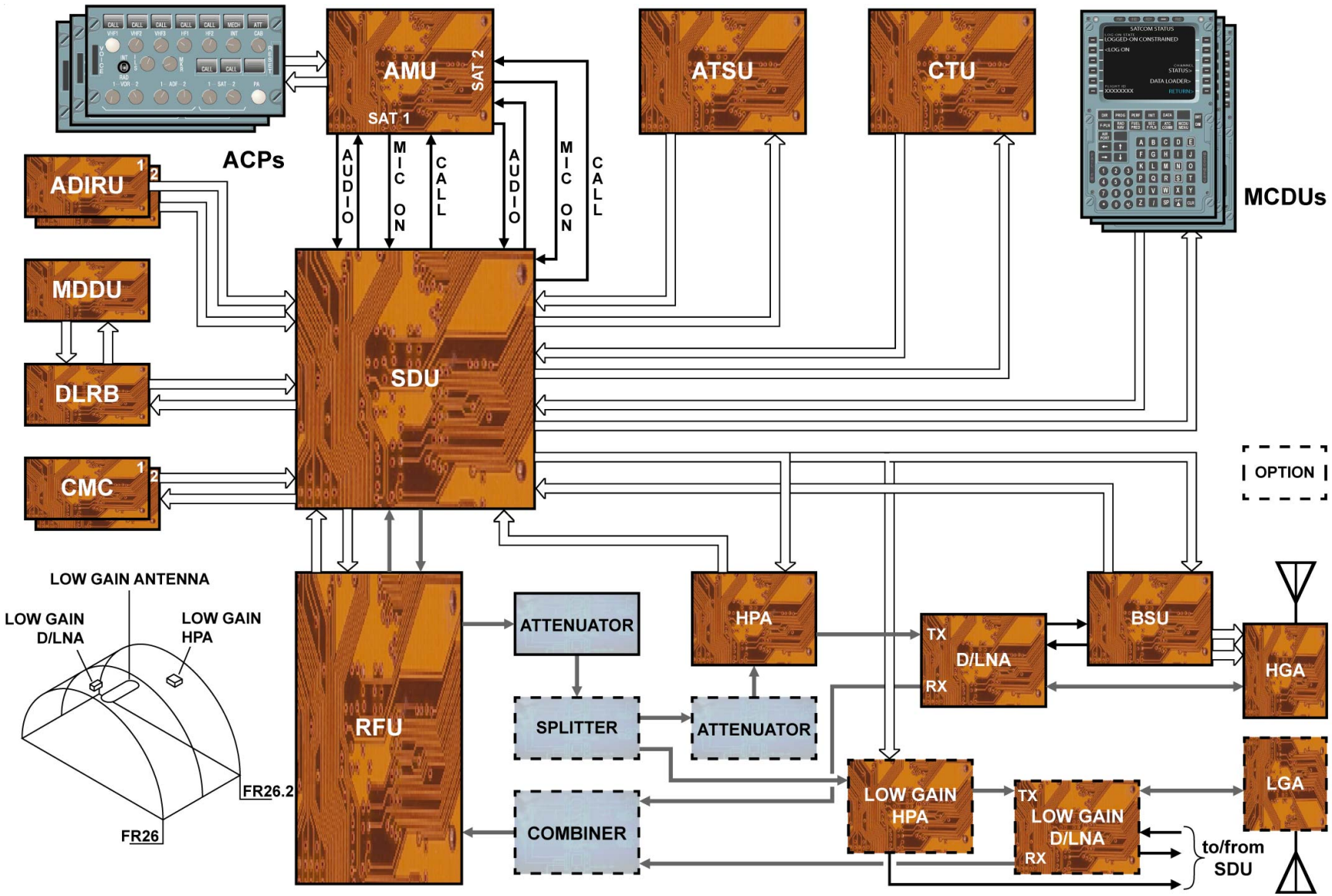

LOW GAIN ANTENNA (LGA) (OPTION)

G7508471 - G7OT0T0 - FM23D400000002

PA-CAB & SERVICE INTERPHONES FUNCTIONALITIES (2)

PASSENGER ADDRESS SYSTEM

The Passenger Address (PA) system is one of the main functions of the CIDS. PA signals are broadcast from the cockpit or cabin crew stations through all the cabin loudspeakers. To make PA announcements, the cabin crew uses the cabin handsets. The quickest way to initiate a PA from the cockpit is to use the cockpit handset, directly connected to the Directors. The cockpit crew can also send a PA using the PA key on the ACP and the cockpit acoustic devices.
A Pre-Recorded Announcements and boarding Music (PRAM) sends pre-recorded announcements and boarding music to the Directors to be broadcast through the PA system. There are two types of PRAM, which have identical functions. It can be a flash memory type plugged into the FAP or an audio tape reproducer installed in the avionics bay. The PRAM, whatever its type, is controlled from the FAP.
Note that PA announcements are also broadcast to the passenger headsets via the IFES. In the event of a PA, the cabin crew is informed by messages on the AIPs and the cockpit crew by a message on the EWD.

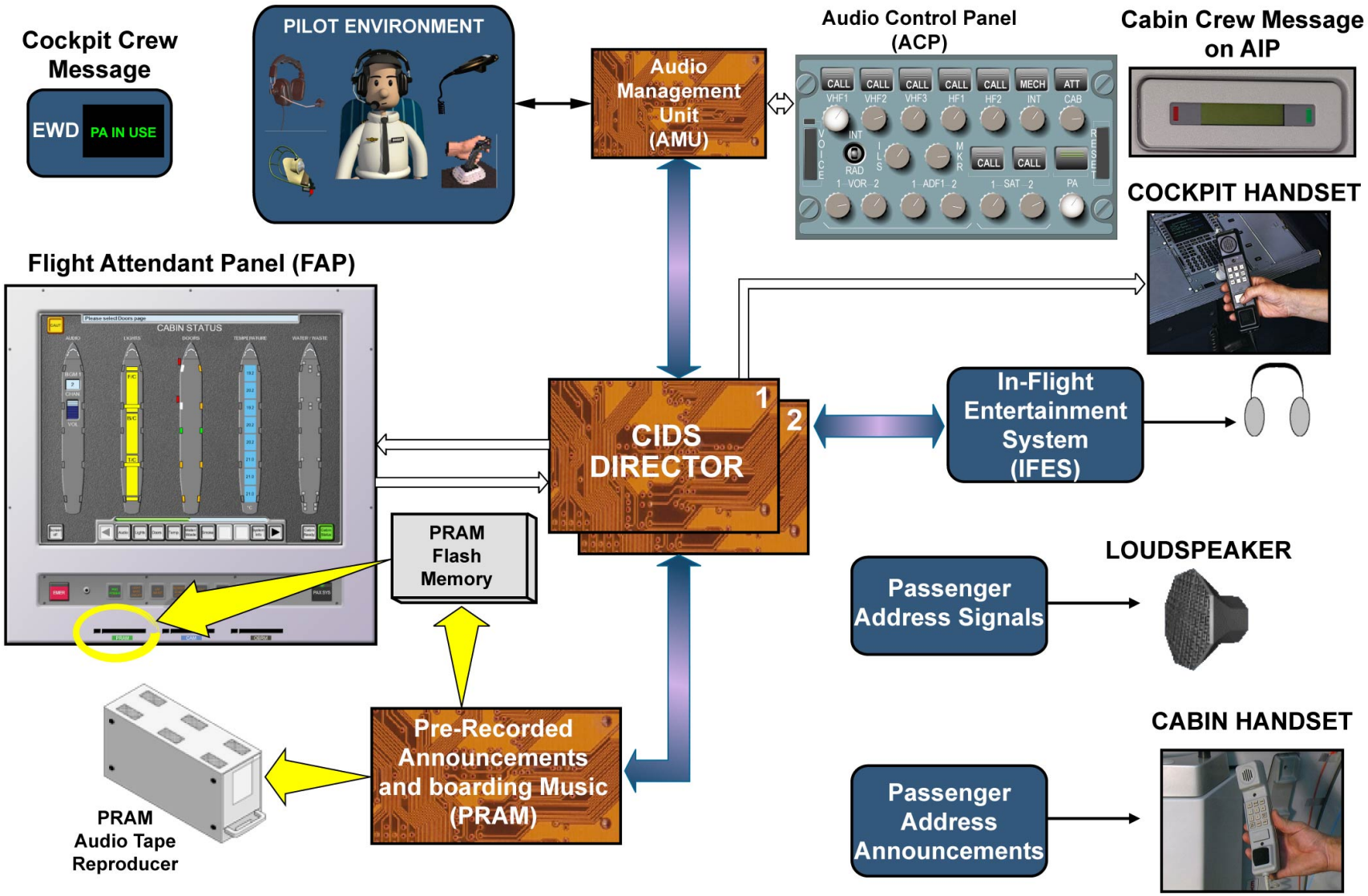

PASSENGER ADDRESS SYSTEM

PA-CAB & SERVICE INTERPHONES FUNCTIONALITIES (2)

CABIN AND FLIGHT CREW INTERPHONE SYSTEM

The cabin and flight crew interphone system allows telephone communication between all cabin crew stations and the cockpit, via the cockpit handset or any cockpit acoustic device. The cabin crew can initiate a call to another cabin crew station or to the cockpit by dialing on the handset. To call the cabin crew from the cockpit, the overhead CALLS panel is used.
To speak to a cabin crew member from the cockpit, the CABin transmission key and the CABin reception key on the ACP are adjusted accordingly. In the cabin, the cabin crew is aware of a call by visual indication on the AIPs and ACPs, associated to the called station. Hi-lo chimes are also broadcast in the assigned zones through the cabin loudspeakers.

G7508471 - G7OT0T0 - FM23B200000001

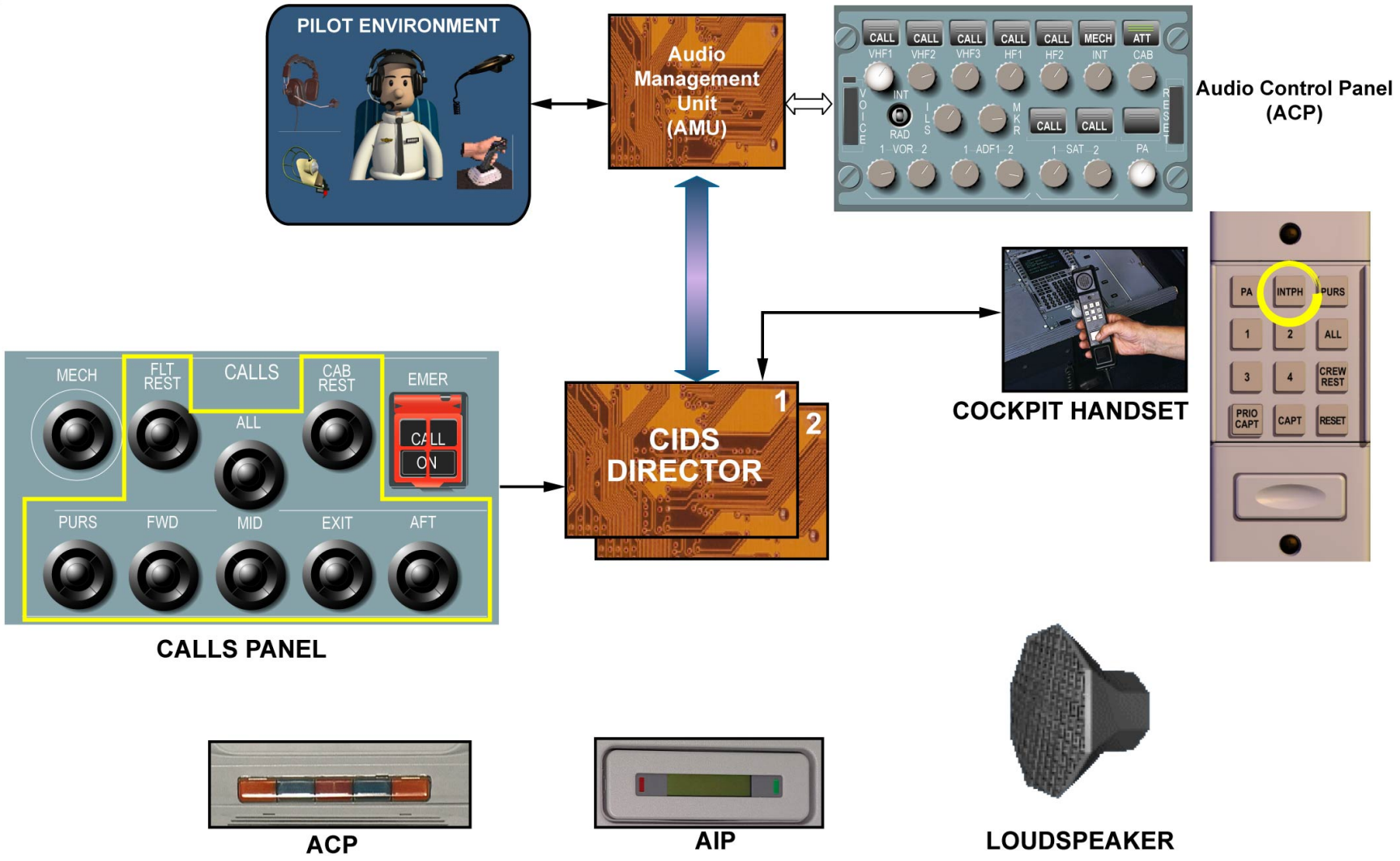

CABIN AND FLIGHT CREW INTERPHONE SYSTEM

PA-CAB & SERVICE INTERPHONES FUNCTIONALITIES (2)

SERVICE INTERPHONE SYSTEM

The service interphone system enables voice communications, on ground only, between the cockpit, the cabin crew stations and the service interphone jacks located around and in the aircraft. In the cockpit, the CABin key on the ACP must be pressed. In the cabin, the cabin crew has to press twice on the INTerPHone key on the handset to activate the service interphone function.
A display on the AIPs in the cabin will indicate that the service interphone is in use. If on-ground information is not sent to the Directors, the SerViCE INTerphone OVerRiDe pushbutton has to be set to ON to force the service interphone to work.

G7508471 - G7OT0T0 - FM23B200000001

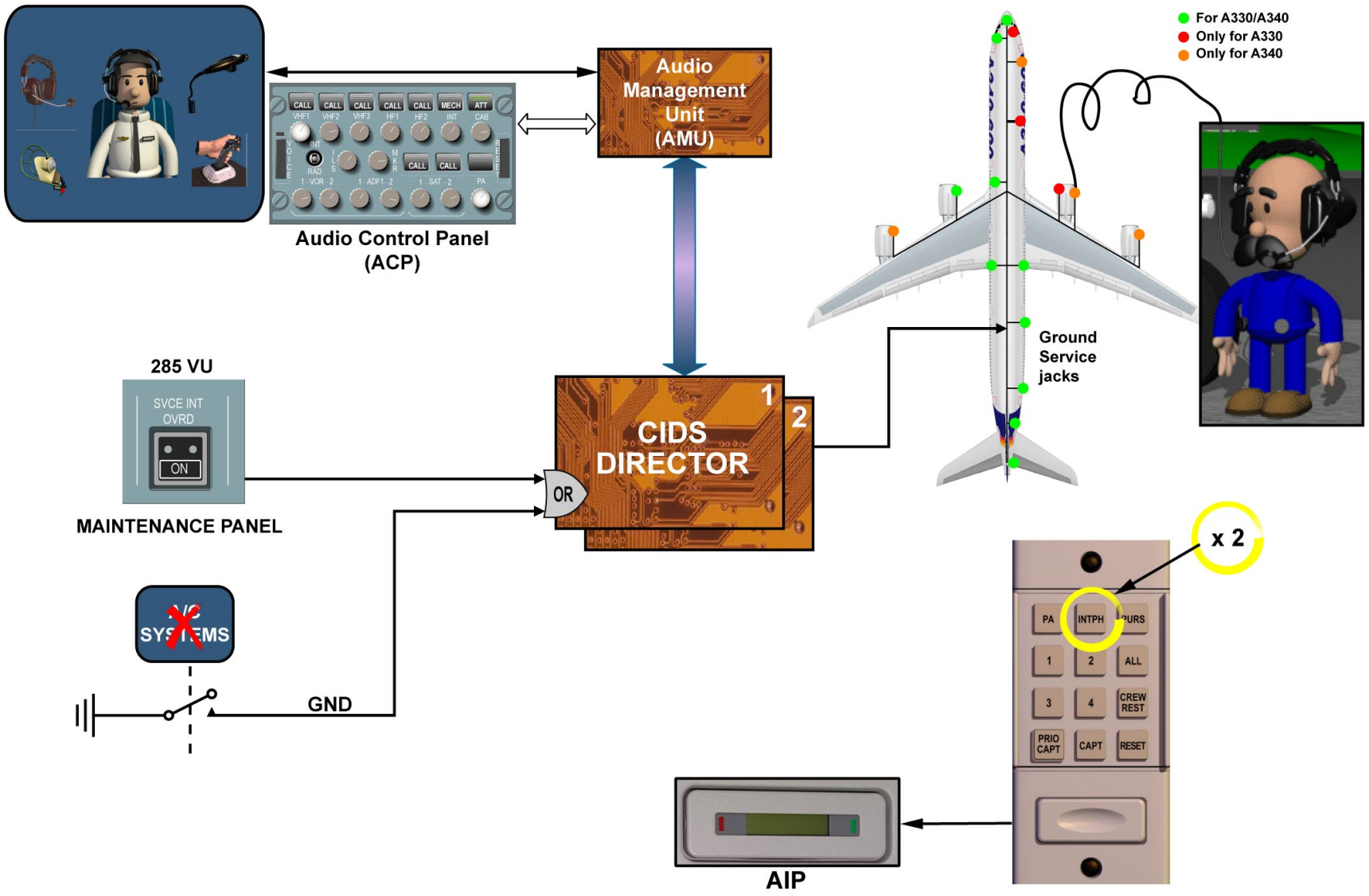

SERVICE INTERPHONE SYSTEM

CABIN INTERCOMMUNICATION DATA SYSTEM D/O (3)

GENERAL

The Cabin Intercommunication Data System (CIDS) is the cabin core system. It is designed to interface between cabin crew, cockpit crew and passengers.

G7508471 - G7OT0T0 - FM23D700000003

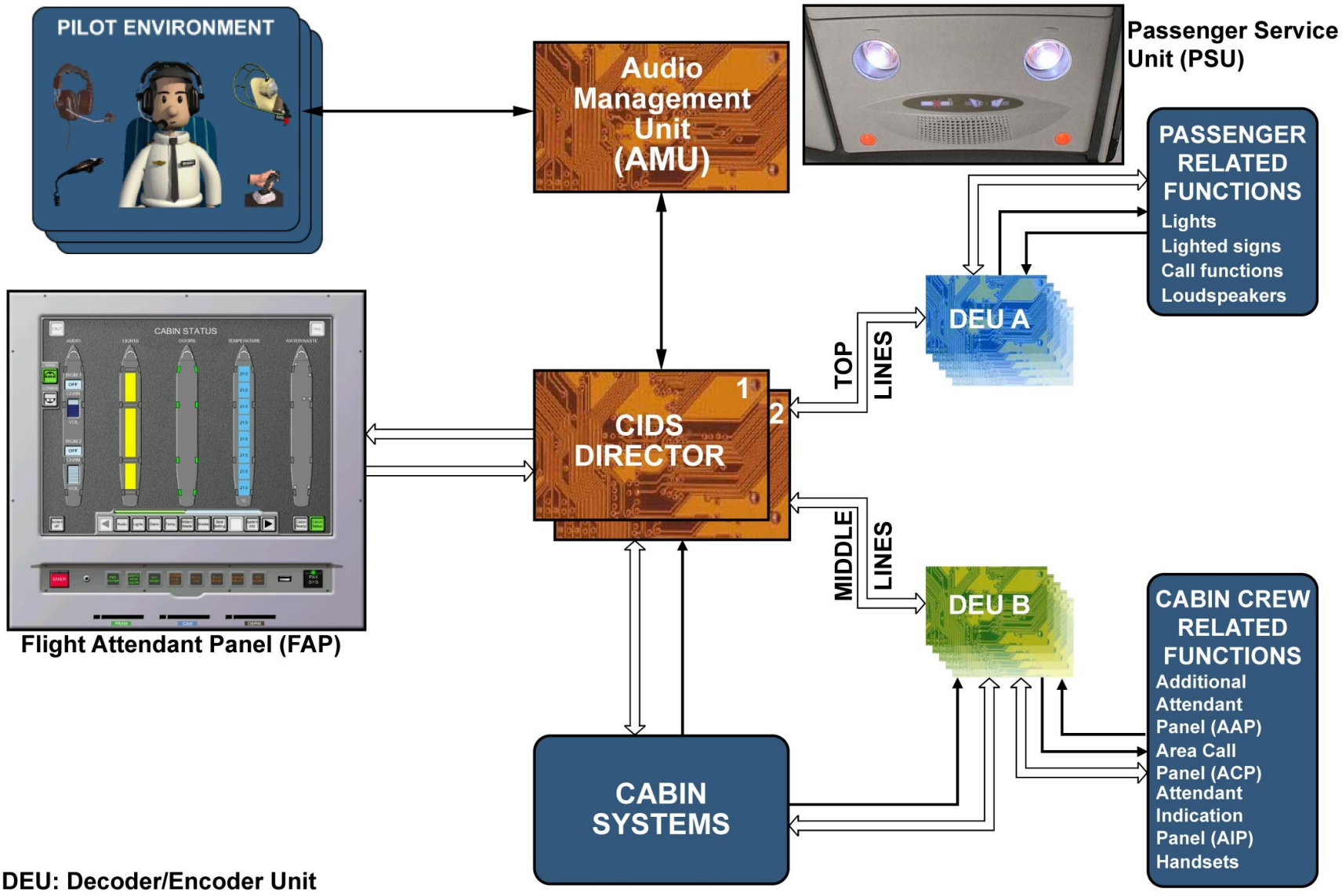

GENERAL

G7508471 - G7OT0T0 - FM23D700000003

CABIN INTERCOMMUNICATION DATA SYSTEM D/O (3)

GENERAL (continued)

DIRECTORS

The two Directors are the central control components of the CIDS. They are fully identical and have the same outputs and inputs.
They provide to each other their operational status through a discrete signal and data and failure information through ARINC 429 buses.In normal operation, Director 1 is operative and Director 2 is in hot stand-by. This means that Director 2 receives and computes the same data as Director 1 but its outputs are disabled.
The Directors are linked with the Flight Attendant Panel (FAP) through two wire types:
- by Ethernet for data exchange,
- by discrete for each hard key.
System reconfiguration for the installation of options, cabin reconfiguration or CIDS expansion is limited to software database changes. These database are the On Board Replaceable Module (OBRM) and the Cabin Assignment Module (CAM). They are downloaded from the FAP..
The CIDS is also designed to detect internal and external faults. The CIDS is a type 1 system. It is connected via the Directors to the Central Maintenance System (CMS) for maintenance purposes (BITE and tests).

G7508471 - G7OT0T0 - FM23D700000003

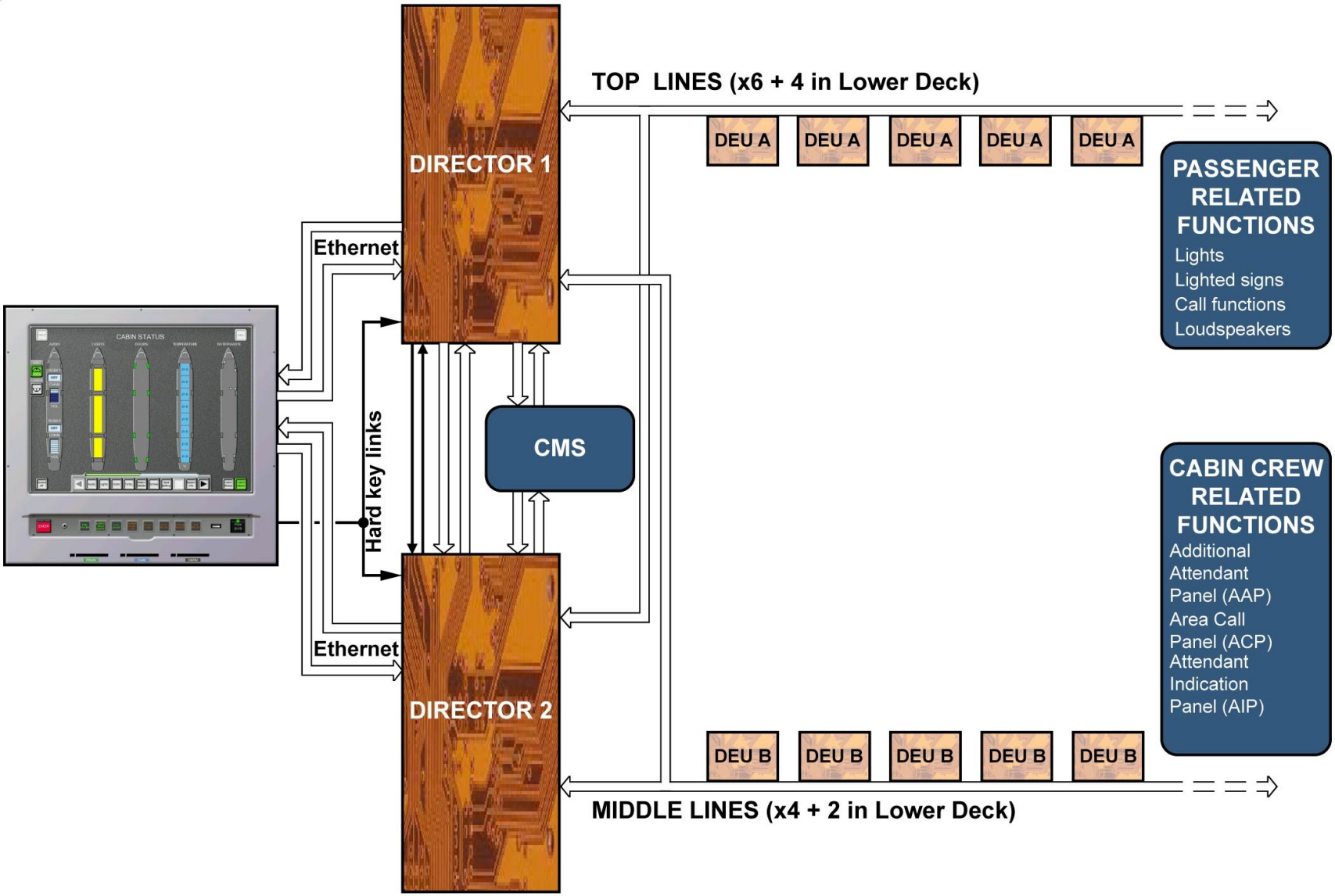

GENERAL - DIRECTORS

G7508471 - G7OT0T0 - FM23D700000003

CABIN INTERCOMMUNICATION DATA SYSTEM D/O (3)

GENERAL (continued)

FLIGHT ATTENDANT PANEL

The FAP is used as the main user interface with the CIDS. It programs, controls and indicates the status of the CIDS and related cabin systems. It is made of a touch screen and a hard key panel.
The FAP display structure is made of different pages related to the different systems connected to the CIDS. The FAP has its own software to build the screens using data from the Directors.
On the top LH corner of the screen, the CAUTion button will turn from gray to amber in case of CIDS internal fault.A message related to this caution will be displayed on the heading row to indicate what to do (which page to select). Despite that, some system pages will come up automatically under failure detection.
The Screen Off button is located in the lower left corner of the touch screen. Pushing that button switches the screen off. The screen is also switched off if no input is made for more than 10 minutes. The screen is switched on again if you touch the screen or in case of an auto event.
The Cabin Status button on the bottom RH corner of the screen calls the CABIN STATUS page, which gives an overview of the cabin status; this concerns boarding music, cabin lights, doors, temperature and lavatories. This button will be green when the CABIN STATUS page is displayed or Grey if not.
At the bottom of the screen, the system and function keys are used for the navigation through the different pages.
The hard key panel is used for major functions, which have to operate independently from the FAP touch screen. The hard key panel contains all hard keys and some interfaces (USB and headset plugs) and is protected by a transparent cover.
The following hard keys are installed on the hard key panel:
- PED POWER to switch the Portable Electronic Device (PED) power on or off in all class seats,
- LIGHTS MAIN ON/OFF to switch the main cabin lights on or off (100% or 0%),
- LAV MAINT to switch lavatory lights on (100%),
- SCREEN 30 sec LOCK to lock the touch function of the screen and be able to clean it,
- EVAC CMD to initiate an emergency evacuation (if the purser is allowed to do so),
- EVAC RESET to reset the evacuation lights and audio alert,
- SMOKE RESET to reset the audio smoke alert,
- FAP RESET.

The following switches are installed on the hard key panel:
- EMER (light),
- PAX SYS to cut off the In-Flight Entertainment (IFE) system normally enabled at power-up.

The following interfaces are installed on the hard key panel:
- USB plug for PC connections,
- headphone plug to listen to boarding music or pre-recorded announcements before broadcasting them.

On the lower part of the FAP panel, partly hidden by the lining, 3 flash card readers are installed. The OBRM contains the system software. The CAM contains the system properties and cabin layout information. The third flash card is optional and is used to store the Pre-Recorded Announcement and boarding music Module (PRAM) message.

G7508471 - G7OT0T0 - FM23D700000003

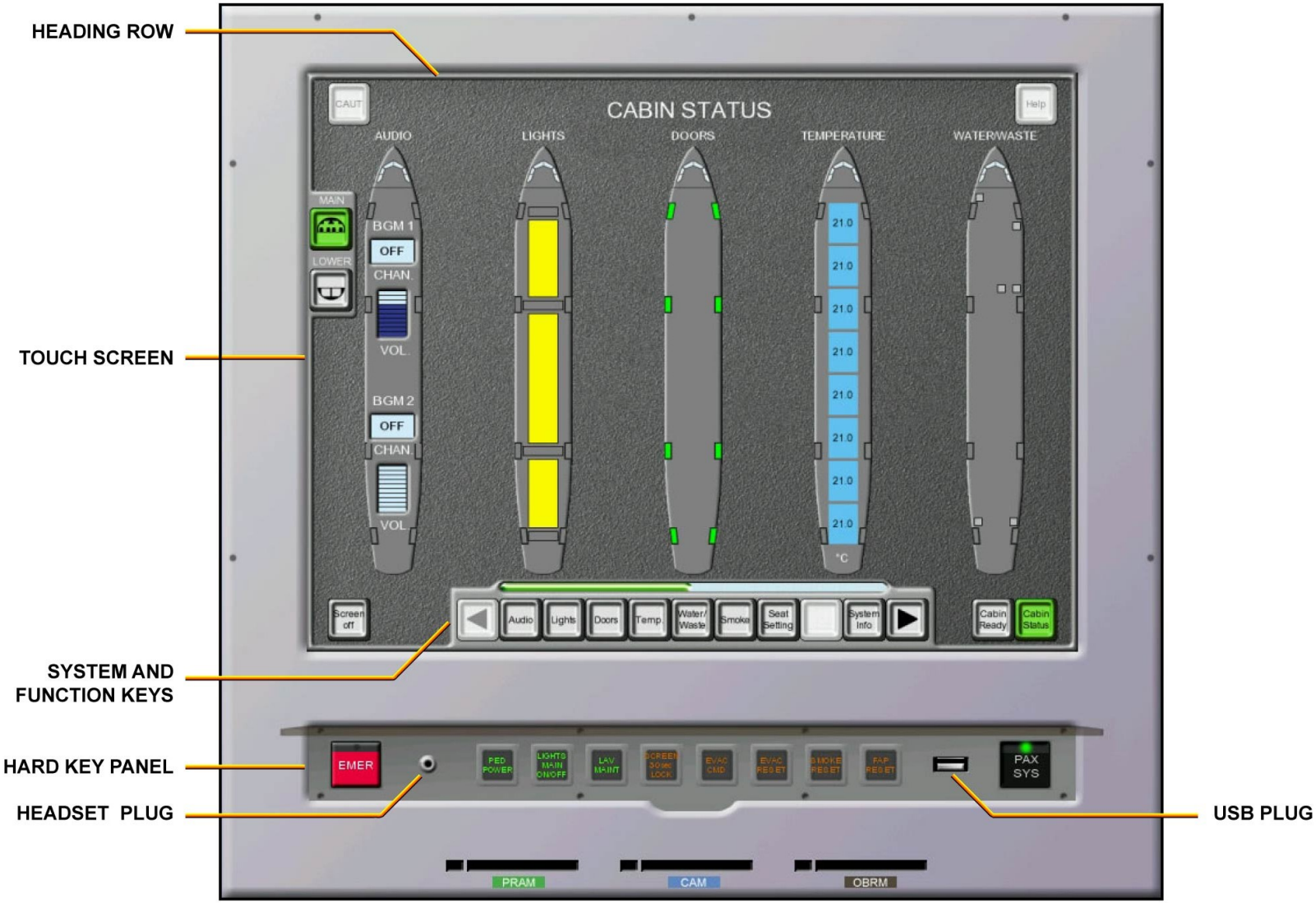

GENERAL - FLIGHT ATTENDANT PANEL

CABIN INTERCOMMUNICATION DATA SYSTEM D/O (3)

GENERAL (continued)

PASSENGER SIDE

Top line data buses link the CIDS Directors to type A Decoder/Encoder Units (DEUs) for passenger functions. Two top lines are installed along each aircraft side and two in the center of the aircraft and all are situated above the ceiling of the cabin. In case of lower deck facilities installation, 4 top lines are additionally installed.
Top lines are bi-directional serial high-speed data buses (4MB/sec.).
Each line is connected to the two Directors in parallel.
A failure of one top line disables all passenger functions on the DEUs connected to this top line.
The lines run through connection boxes. Each connection box is connected to a DEU A. It gives the DEU A its own address via the two coding switches.
Control commands and audio signals from the Director are decoded and transmitted to the respective connected equipment.

NOTE: Note that the last connection box on the top line includes a termination resistor for impedance matching.

Up to 63 type A DEUs can be installed in the cabin plus a maximum of 16 in the lower deck facilities. The CIDS uses each DEU A to control cabin illumination, signs, calls and cabin sounds according to cabin parameters programmed in the CAM.
The passenger functions are centralized in the Passenger Service Units (PSUs). They are connected to type A DEUs via a Passenger Interface and Supply Adapter (PISA). Up to 6 PISAs can be connected to each DEU A. The PISAs are installed in each PSU.
The PISAs are connected to the following equipment:
- reading-light switches and reading lights,
- PAX call button and call light,
- loudspeakers,
- No Smoking (NS), Fasten Seat Belt (FSB) and Return To Seat (RTS) signs.

The Advanced Integrated Ballast Units (AIBUs) are connected directly to the DEU A through an RS485 bus. They control general cabin lighting gradually using 128 dimming steps.
For special applications, it is possible to connect directly to the type A DEUs all cabin-related components such as:
- R/Ls via a Reading Light Power Supply Unit (RLPSU),
- signs,
- loudspeakers,
- classical ballast unit.

In normal mode, the service bus supplies 28VDC directly to the type A DEUs and to the PISAs. The system operates at full capacity.
In emergency mode, only the essential bus supplies 28VDC to the CIDS. In this configuration, the PISAs are supplied via the DEU A in order to activate FSB/NS signs.

G7508471 - G7OT0T0 - FM23D700000003

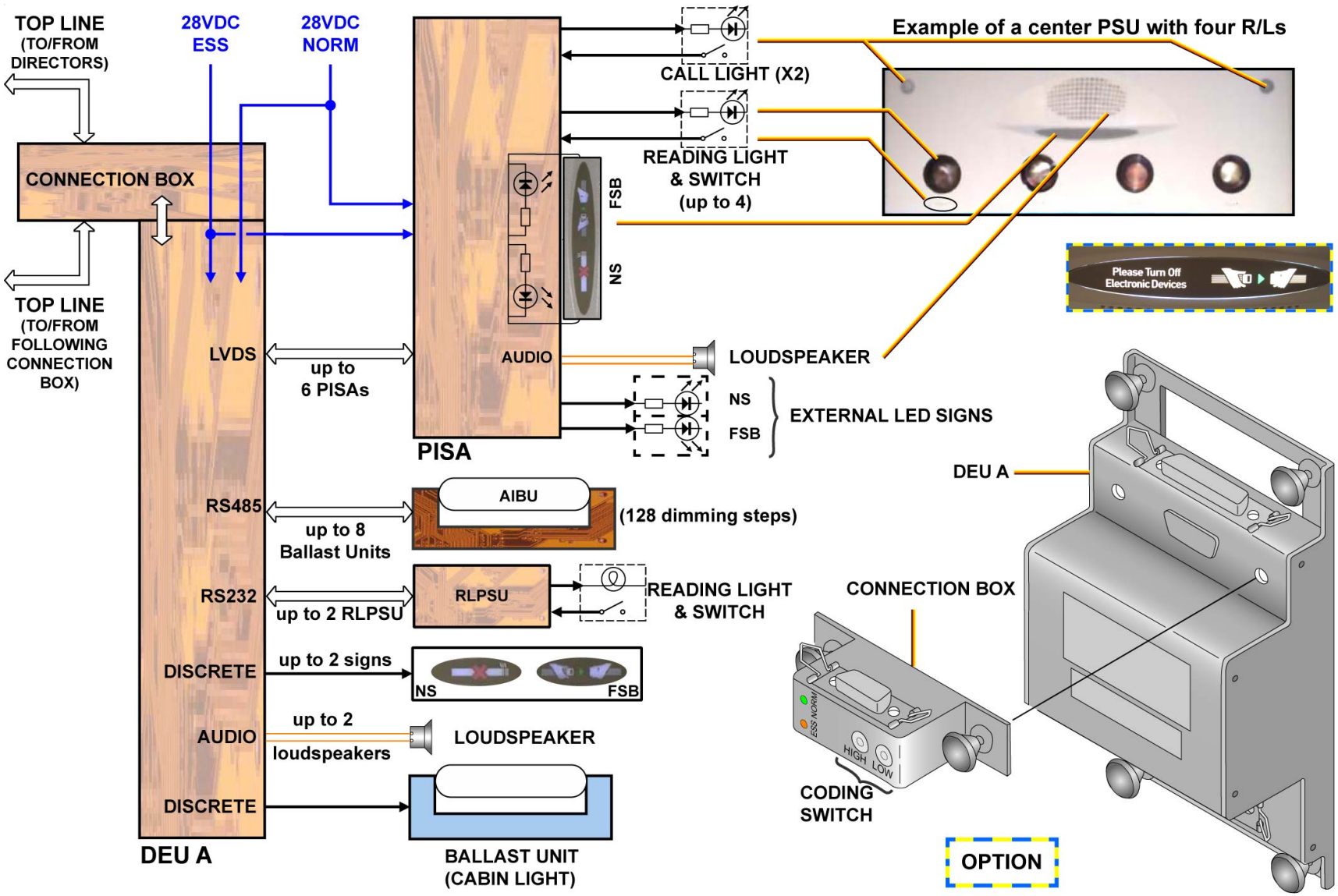

GENERAL - PASSENGER SIDE

G7508471 - G7OT0T0 - FM23D700000003

CABIN INTERCOMMUNICATION DATA SYSTEM D/O (3)

GENERAL (continued)

CABIN CREW SIDE

Middle line data buses link the CIDS Directors to type B DEUs for cabin crew functions. One middle line is installed along each aircraft side and is situated above the ceiling of the cabin. If lower deck facilities are installed, 2 middle lines are also installed.
Middle lines are bi-directional serial high-speed data buses (4MB/sec.).
Each line is connected to the two Directors in parallel.
A failure of one middle line disables all connected DEUs B.
The lines run through connection boxes. These connection boxes are physically the same as the ones connected to the top lines.
Each connection box is connected to a DEU B. It gives the DEU B its own address via the two coding switches.

NOTE: Note that the last connection box on the middle line includes a termination resistor for impedance matching.

A physical mount device helps the mechanics not to mount a DEU A in place of a DEU B and vice versa.
Up to 15 type B DEUs can be installed in the cabin. In case of a double deck operation, the number of type B DEUs is limited to 12 in the cabin and 12 in the lower deck.
The CIDS uses each DEU B to control the different devices needed by the cabin crew.
The Attendant Indication Panels (AIPs), located in the cabin crew stations, indicate (in written form) PA, interphone and other system information to the cabin crew.
The Area Call Panels (ACPs), located on the ceiling near the cabin crew stations, draw the cabin crew's attention by illuminated fields.
The Additional Attendant Panels (AAPs), located in cabin crew stations, control certain cabin functions instead of the FAP.
Each attendant station is equipped with a handset for passenger address and interphone functions.

The following equipment can also be connected:
- Ice Protection Control Unit (IPCU),
- Emergency Power Supply Unit (EPSU),
- Autonomous Standby Power Supply Unit (ASPSU),
- Slide Release Power Supply Unit (SRPSU),
- slide and door sensors,
- call light.

G7508471 - G7OT0T0 - FM23D700000003

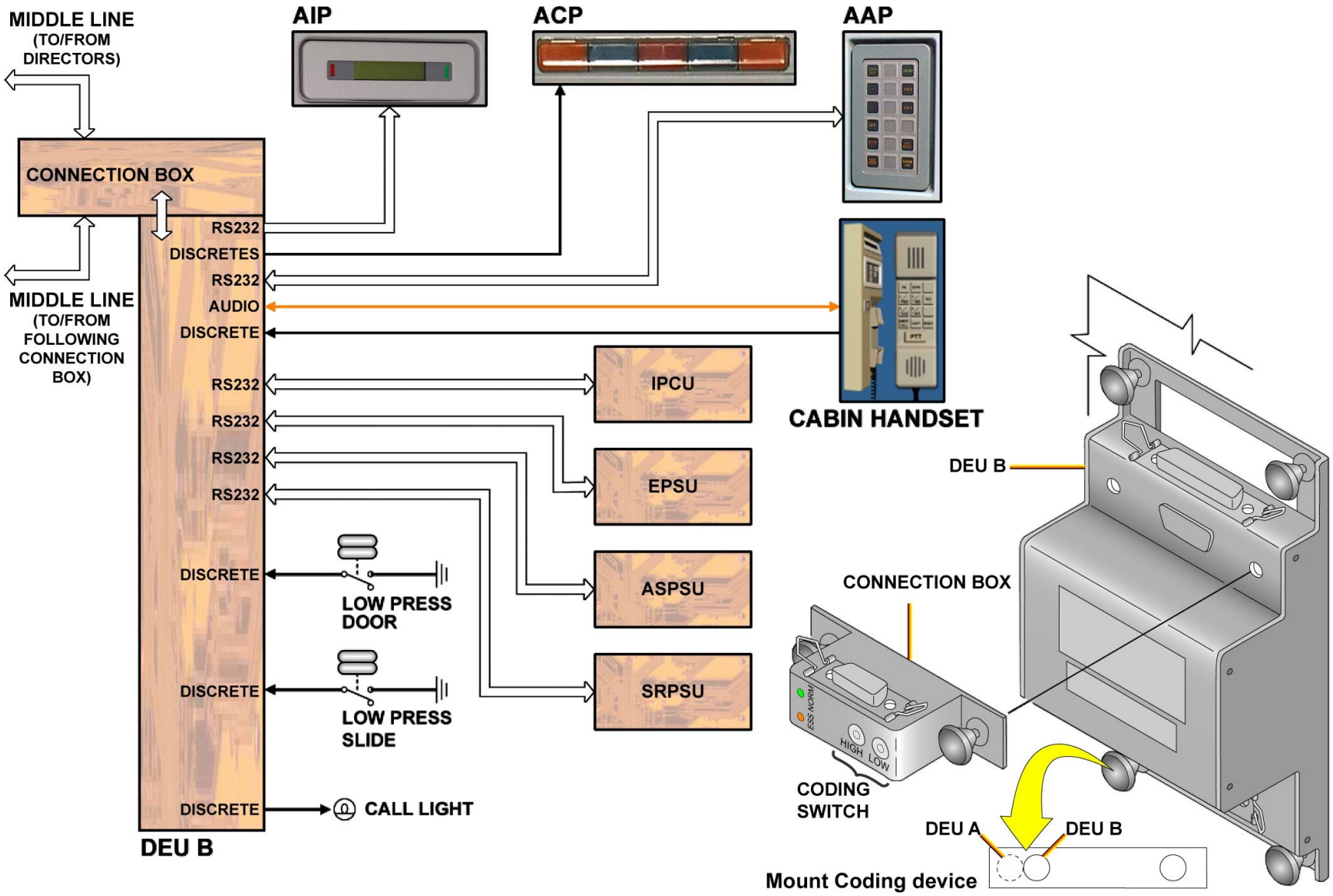

GENERAL - CABIN CREW SIDE

CABIN INTERCOMMUNICATION DATA SYSTEM D/O (3)

GENERAL (continued)

POWER SUPPLY

In normal mode, the service bus supplies all CIDS Directors and DEUs with 28VDC. The service bus is available on GND but is also the normal supply in flight.
The essential bus supplies power to the CIDS if the service bus is not available.
If the service bus is not available and the CIDS is in emergency mode, the power consumption is reduced to a minimum. Only the components that are needed for the minimum functions are supplied with electrical power.
The system operates in a downgraded capability mode. The remaining functions are:
- Passenger Address (PA),
- cabin interphone,
- EVAC,
- smoke indication.

The CABIN LIGHTS illumination is set to 100%.
The type A DEUs, which are connected to the top lines, are only supplied with power when an audio signal is present. If there is no audio signal, the active Director operates the top line cut-off relays to stop the power supply to the DEUs.
If a power interruption is longer than 5 sec., the CIDS software is reset and all the components of the system are set to the predefined status.
On ground reset is done through a total power-up test, lasting approximately 90 sec. In flight, a short power-up test will be done, lasting less than 20 sec.

NOTE: Note that the BITE and test functions are only active when the essential bus bar is also available.

G7508471 - G7OT0T0 - FM23D7000000003

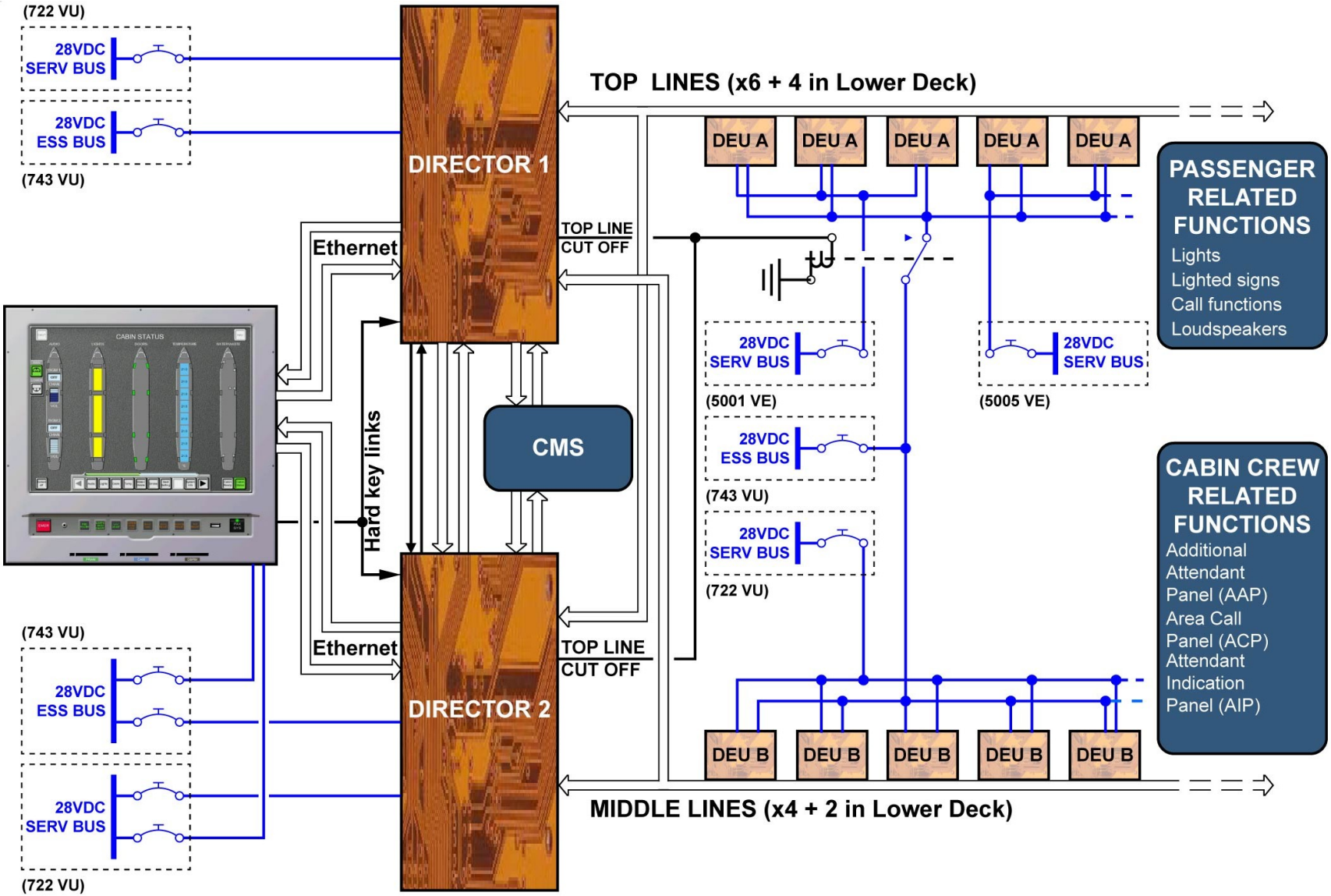

GENERAL - POWER SUPPLY

G7508471 - G7OT0T0 - FM23D700000003

CABIN INTERCOMMUNICATION DATA SYSTEM D/O (3)

OPERATION

The main page, called CABIN STATUS page, helps the purser to have an overall status of the cabin. This page is displayed automatically at power-up.
This page allows direct access to the 5 system pages, AUDIO, CABIN LIGHTING, DOORS, CABIN TEMPERATURE and SMOKE pages via the aircraft symbols.
All system pages are selectable by the system and function keys at the bottom of the screen. There are different sets of system and function keys. A set has a maximum of nine keys.
The different system pages will be described with their related system or function.

G7508471 - G7OT0T0 - FM23D700000003

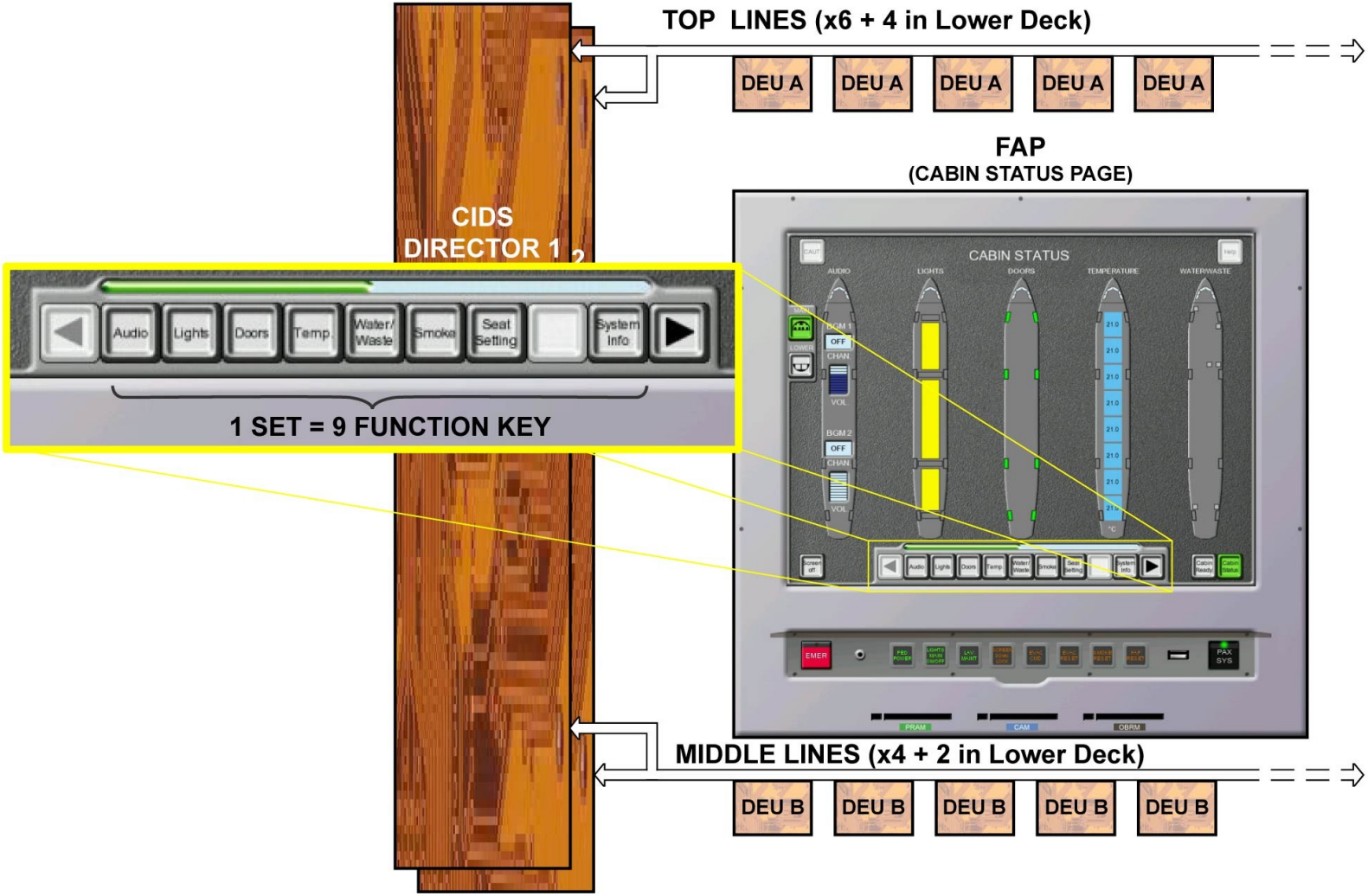
TOP LINES (x6 + 4 in Lower Deck)
DEU A
DEU A
DEU A
DEU A
DEU A
FAP
(CABIN STATUS PAGE)
CIDS
DIRECTOR 1
Audio
Lights
Doors
Temp.
Water/ Waste
Smoke
Seat Setting
System Info
1 SET = 9 FUNCTION KEY
CABIN STATUS
AUDIO
LIGHTS
DOORS
TEMPERATURE
WATER/WASTE
MIDDLE LINES (x4 + 2 in Lower Deck)
DEU B
DEU B
DEU B
DEU B
DEU B

OPERATION

CABIN INTERCOMMUNICATION DATA SYSTEM D/O (3)

OPERATION (continued)

PASSENGER ADDRESS AND BOARDING MUSIC

The passenger address system supplies the PA related announcements from the cockpit, the attendant stations, the PRAM and the IFE system to all assigned cabin loudspeakers.PA announcements are also transmitted through the passenger headset, if the IFE system is activated, in order to draw passenger attention.
Cockpit and cabin crew make PA announcements by using handsets. Basically, the cockpit handset has a Push To Talk (PTT) button only. Pushing this PTT button connects the handset to all loudspeakers. Optionally, it is possible to install a handset with an integrated keyboard. These functions are similar to the cabin crew handset.
The following functions are available:
- DIRECT PA: pushing the PTT button activates a link between the handset and all loudspeakers in the cabin and under-floor,
- PA ALL: pushing the PA button followed by the ALL and PTT buttons activates a link between the handset and all loudspeakers in the aircraft cabin,
- PA 1, 2 or 3: push the PA button followed by 1, 2 or 3 and the PTT button transmits the announcement to the corresponding zone.
Announcements can also be made to the crew rests (if installed).
Cockpit crew can also make PA announcements by using the acoustic devices and selecting the PA key on the ACP. The audio signal will then transit via the Audio Management Unit (AMU).
Optionally, an additional cabin hand microphone can be installed in the FWD area of the cabin (for DIRECT PA only).
When the PTT key is pressed, related to the direct PA function, the confirmation message "DIRECT PA/PA ALL IN USE" is displayed on all the AIPs and a high-lo chime is broadcast to all the cabin loudspeakers and passenger headsets. In the cockpit, the "PA IN USE" message is displayed on the left memo area of the ECAM EWD memo.
The function of the PRAM is to play pre-recorded messages. It also plays boarding music programs to the passengers through the aircraft PA system. It can be of the flashcard type, directly plugged into the FAP, or of the cassette or CD audio reproducer type connected with two ARINC 429 data buses to the CIDS Directors. The selection of pre-recorded announcements and/or boarding music is made on the AUDIO page of the FAP.
Depending on certain conditions, the PA level can be increased when engines are running or in case of rapid decompression.
The PA functions have priorities:
1- DIRECT PA,
2- all remaining PA functions.
The PA sources have the following priorities:
1- AMU,
2- cockpit handset,
3- purser station,
4- cabin crew handsets,
5- PRAM,
6- IFE system.
A source with higher PA priority interrupts a PA announcement from a source with lower priority. Only the announcement from the source with the higher priority is heard. However, there is an exception, if the lower priority source makes an announcement with a higher functional priority.

G7508471 - G7OT0T0 - FM23D700000003

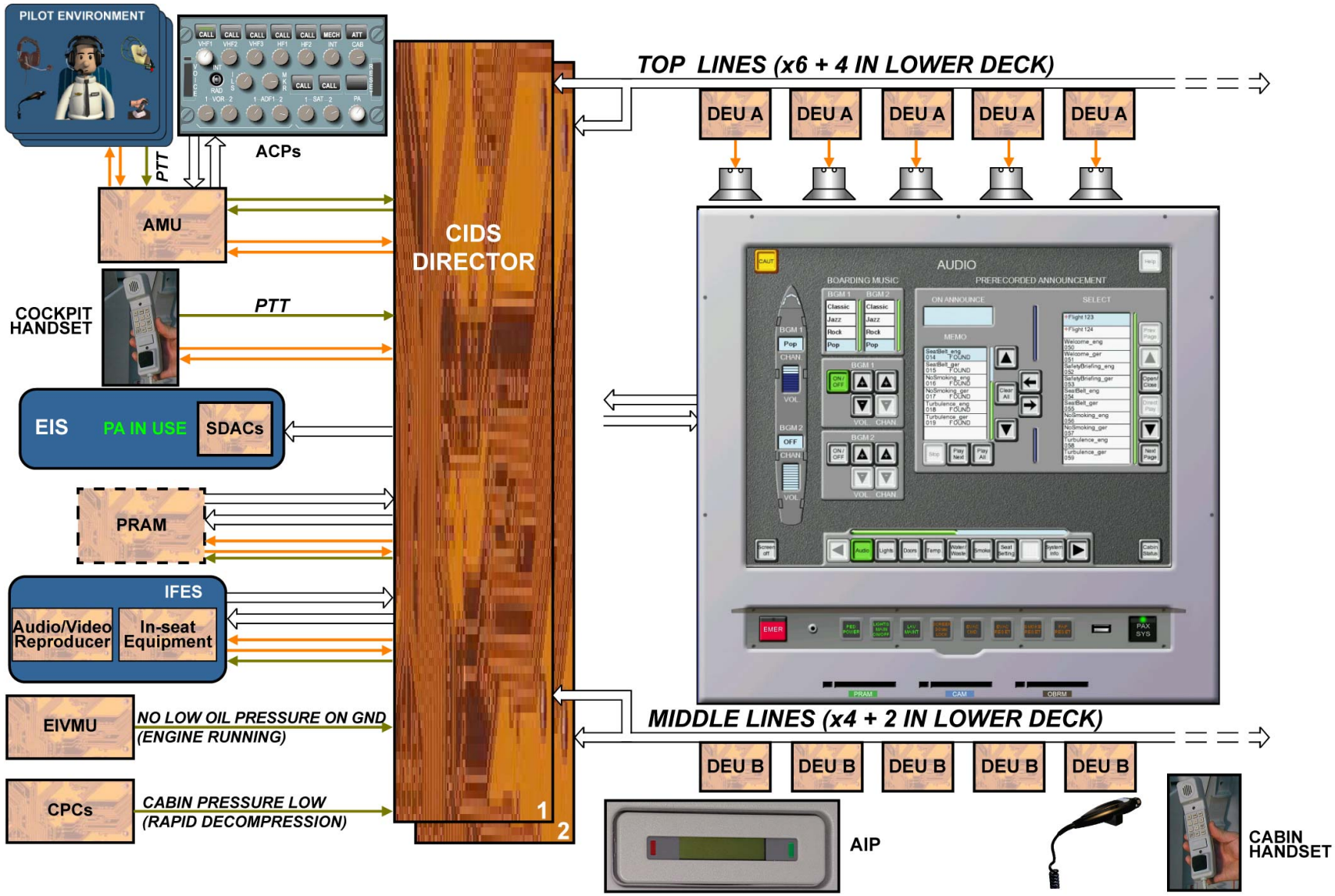

OPERATION - PASSENGER ADDRESS AND BOARDING MUSIC

G7508471 - G7OT0T0 - FM23D700000003

CABIN INTERCOMMUNICATION DATA SYSTEM D/O (3)

OPERATION (continued)

INTERPHONE

The interphone systems will be used for the communication between cockpit crew, cabin crew and ground mechanics.
One or more links can be initialized at the same time. In conference mode, communication is possible between more than two interphone stations.
From the cockpit, interphone communications are initiated with the CALLS panel and via the equipment connected to the AMU (boomset, microphone and oxygen mask).
The following functions are available to call the cabin from the cockpit CALLS panel:
- EMER call (to call all cabin crew stations in emergency mode),
- ALL call (to call all cabin crew stations),
- PURS call (to call the purser),
- FWD call (to station at door 1),
- MID call (to station at door 2),
- EXIT call (to station at door 3),
- AFT call (to station at door 4).

When they are installed, it is also possible to call the crew rest stations.

NOTE: Note that, before initiating an interphone link with the cabin, the pilot must select the cabin transmission key and reception knob on the ACP.

As an option, it is possible to supply the audio signal, from the interphone station in use, to the AMU. The cockpit crew can listen to the announcement as long as no link to the AMU is established. Side tone and cabin attendant messages can be listened to through the cockpit loudspeakers. This monitoring function is also available when using the cockpit handset equipped with the optional integrated keyboard.
Calls from the cabin are initiated with the cabin handset.
At the cabin level, the following interphone functions are available from each handset:
- PRIO CAPT (to call the cockpit in emergency mode),
- INTPH + CAPT (to call the cockpit in normal mode),
- INTPH + PURS (to call the purser),
- INTPH + ALL (to call all attendant stations in the cabin),
- INTPH + 1, 2, 3 or 4 (to call the corresponding cabin crew stations),
- INTPH + CREW REST + 1 (to call the Flight Crew Rest Compartment (FCRC) if installed),
- INTPH + CREW REST + 2 (to call the Lower Deck Mobile Crew Rest (LDMCR) if installed).

The functions have different priorities:
1- EMERGENCY CALL,
2- CALLS FROM COCKPIT,
3- ALL ATTENDANT CALL,
4- NORMAL CALL.
The sources have the following priorities:
1- AMU (cockpit),
2- cockpit handset,
3- cabin handsets.
A source with higher priority interrupts a link to an interphone station with a lower priority. A source with lower priority and a selected function with higher priority also interrupts an existing link.
In the cabin, a chime will be activated in the respective cabin area.
If the call is assigned to the cockpit, the aural annunciation is done by the activation of the cockpit buzzer via the Flight Warning Computer (FWC). The FWC receives the respective signal from the active Director.
During the dial procedure, the dial information is displayed on the related AIP. After finishing the procedure the respective light segment in the ACP comes on and the related message is shown on the assigned AIP. The Directors will know each AIP and ACP location thanks to

G7508471 - G7OT0T0 - FM23D700000003

the CAM data where the attendant station is situated, according to the connection box codes.
The reset function of an interphone on the handsets occurs after hanging up or after pushing the RESET button. This reset function is automatically activated after approximately 5 minutes, when no requested handset accepts the call.
In the cockpit, the emergency call indicator (for EMER CALL only) and the ATT light on the ACP are activated according to the initiated call.
The service interphone system enables voice communications, on ground only, between the cockpit, the cabin crew stations and the service interphone jacks located in and around the aircraft.
In the cockpit, the CABin key on the ACP must be pressed. In the cabin, the cabin crew has to press twice on the INTerPHone key on the handset to activate the service interphone function.
A display on the AIPs in the cabin will indicate that the service interphone is in use.
If Landing Gear Control and Interface Unit (LGCIU) on-ground information is not sent to the Directors, the SerViCE INTerphone OVerRiDe P/B has to be set to ON to force the service interphone to work.

G7508471 - G7OT0T0 - FM23D700000003

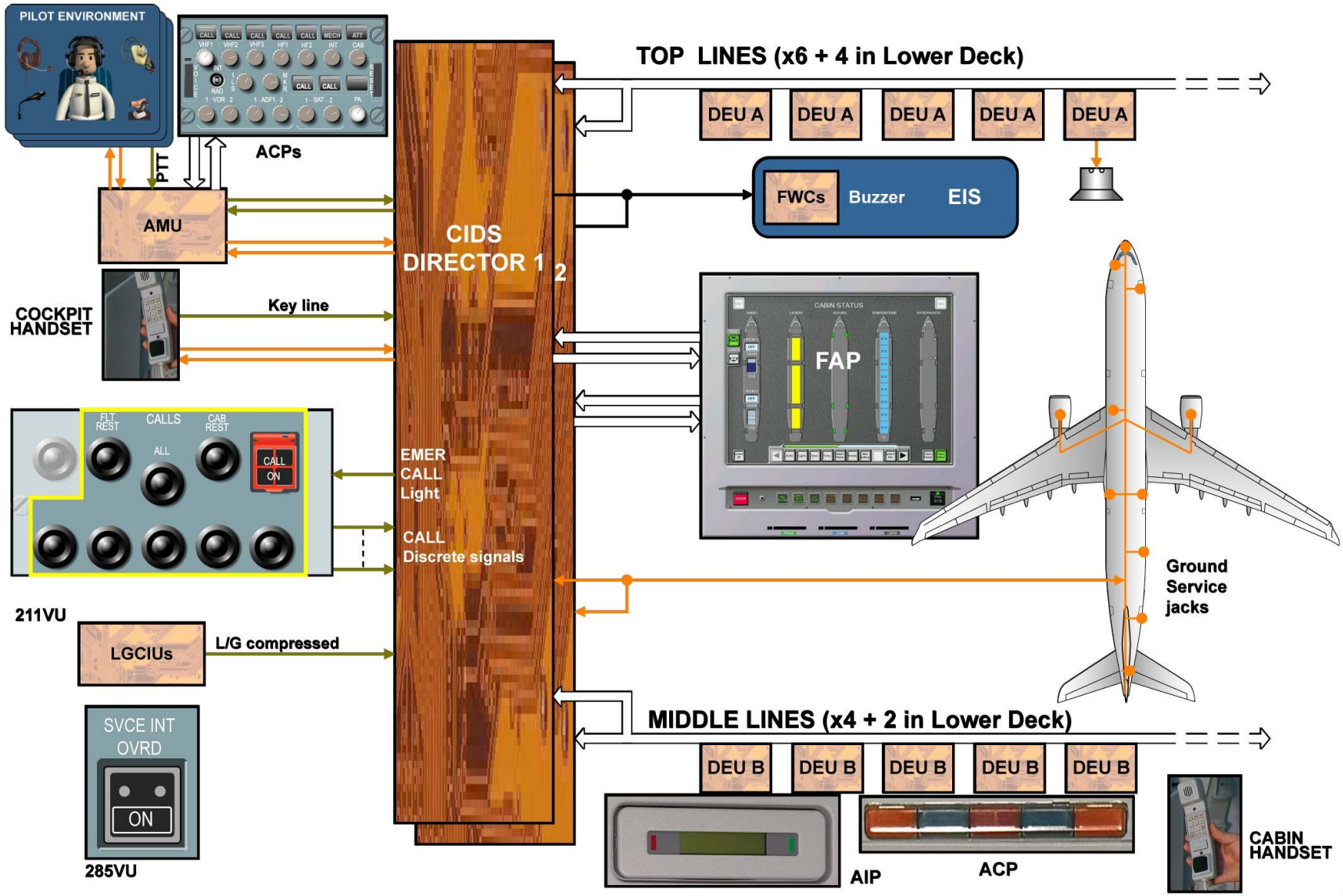

OPERATION - INTERPHONE

This Page Intentionally Left Blank

G7508471 - G7OT0T0 - FM23D700000003

CABIN INTERCOMMUNICATION DATA SYSTEM D/O (3)

OPERATION (continued)

PAX SIGNS

The passenger lighted-signs system controls the NS, FSB, RTS and EXIT signs.
The control switches for the signs are located on the SIGNS panel on the cockpit overhead panel.
Except for the EXIT sign, these signs are connected to a PISA and are controlled by the Directors via type A DEUs. The EXIT signs are controlled by the Directors via the EPSU.
Some remote signs are not connected to a PISA: they are generally located in the galley/entrance areas or lavatories (e.g. RTS sign).
As an option, it is possible to install NO PED signs instead of NS signs. As an option, it is possible to install Pictogram Signs. These signs are controlled independently from all other signs (automatic activation under CAM programmed conditions) and are connected to PISA via type A DEUs and/or type B DEUs.
When the FSB control switch is in the OFF position, all FSB and RTS signs are OFF.
The FSB control switch in the ON position sets a Director discrete to ground and the active Director sends a signal to the type A DEUs. The DEUs switch on all FSB signs and the RTS signs.
The FSB control switch in the AUTO position sets a Director discrete to ground to activate the FSB and RTS signs in case of:
- L/G down and locked (LGCIU) or slats or flaps extended (SFCC),
- engines running (EIVMU).
The FSB sign ON status is sent to the System Data Acquisition Concentrator (SDAC) and a FASTEN SEAT BELT message is initiated on the ECAM display.
The NS control switch in the ON position sets a Director discrete to ground and the active Director sends a signal to the type A DEUs. The DEUs switches on all NS sign.
The NS control switch in the AUTO position sets a Director discrete to ground to activate the NS and EXIT signs in case of L/G down and locked (LGCIU) or slats or flaps extended (SFCC).
The NS sign ON status is sent to the SDAC and a NO SMOKING message is initiated on the ECAM display.
The NS control switch in the OFF position switches off all NS and EXIT signs. Only the NS signs in the no smoking areas are constantly switched on.
The no smoking areas are defined on the CABIN PROGRAMMING page of the FAP.
On the FAP, on the CABIN PROGRAMMING page, you can activate the NON SMOKER A/C function. All NS and attendant NS signs are switched on, regardless of the position of the cockpit switches.
In case of cabin decompression all NS and FSB signs are switched on, regardless of the position of the cockpit switches. The RTS signs are switched off.
Upon activation of the NS or FSB signs, the signs flash for 5 seconds and then remain on.
Activating and deactivating the NS or FSB signs initiate an attention chime in the cabin.
Additionally, the active Director transfers the FSB and NS signs status to the PRAM in case of special announcements and/or boarding music.
Optionally, it is possible to dim or brighten the signs, when the general illumination dimming comes to a predefined level. When the intensity of the cabin illumination is below this level, the signs are dimmed to a set level. The time for dimming the signs is programmable. When the cabin illumination is above this level, the signs are set to bright in the same way.

G7508471 - G7OT0T0 - FM23D700000003

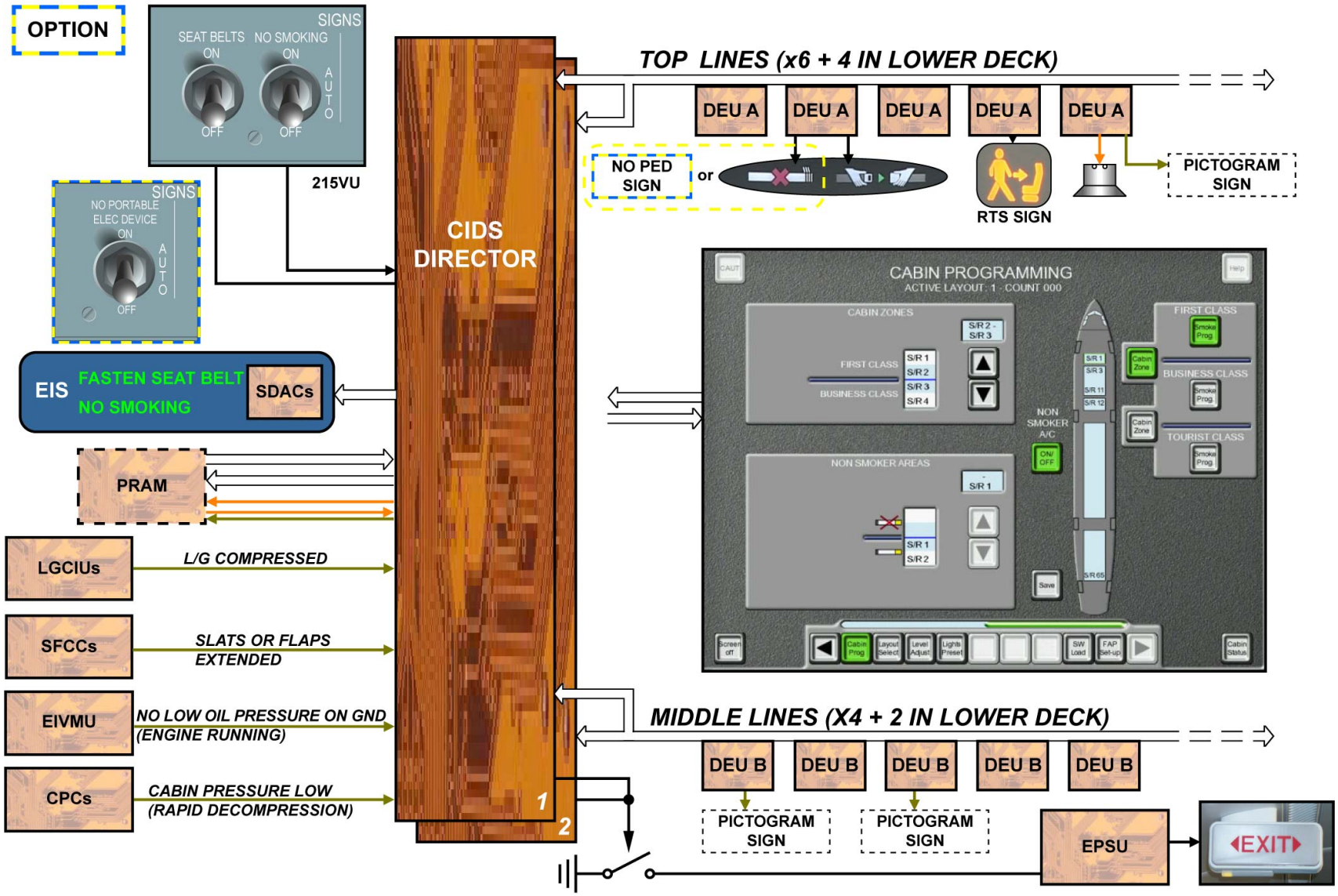

OPERATION - PAX SIGNS

CABIN INTERCOMMUNICATION DATA SYSTEM D/O (3)

OPERATION (continued)

PAX CALL

The passenger call system controls the passenger call activation and indications.

A passenger call is initiated by pushing the PAX CALL button at each seat row (PSU) or in the lavatory. The call can also be initiated from the Passenger Control Unit (PCU), which is located in the armrest of each seat.

When the PAX CALL button is pressed, a signal is sent to the Directors, via the DEU A or the IFE system. The active Director will then send a signal to the DEU A to switch on the related call light. At the same time, it will switch on the respective ACP light segment and a related message shows the location on the AIP.

A call chime is heard from all loudspeakers in the respective cabin area upon call activation. As an option, it is possible to suppress the chime activation if a predefined number of calls is active in one zone.

Pushing the CALL button a second time resets the call indications. The respective call light and the AIP indications for this call go off. The assigned ACP goes off only if no other call assigned to this ACP is active.

Pushing the Call Reset button on the AUDIO page of the FAP or on the AAP resets all calls in the assigned zone. The reset command includes the reset of all passenger call indications.

After pushing the Chime Inhibit button on the AUDIO page of the FAP, the call chime is inhibited. All visual indications remain. This function is only available for calls coming from seat rows. As an option, it is possible to activate this function on the assigned AAP.

G7508471 - G7OT0T0 - FM23D700000003

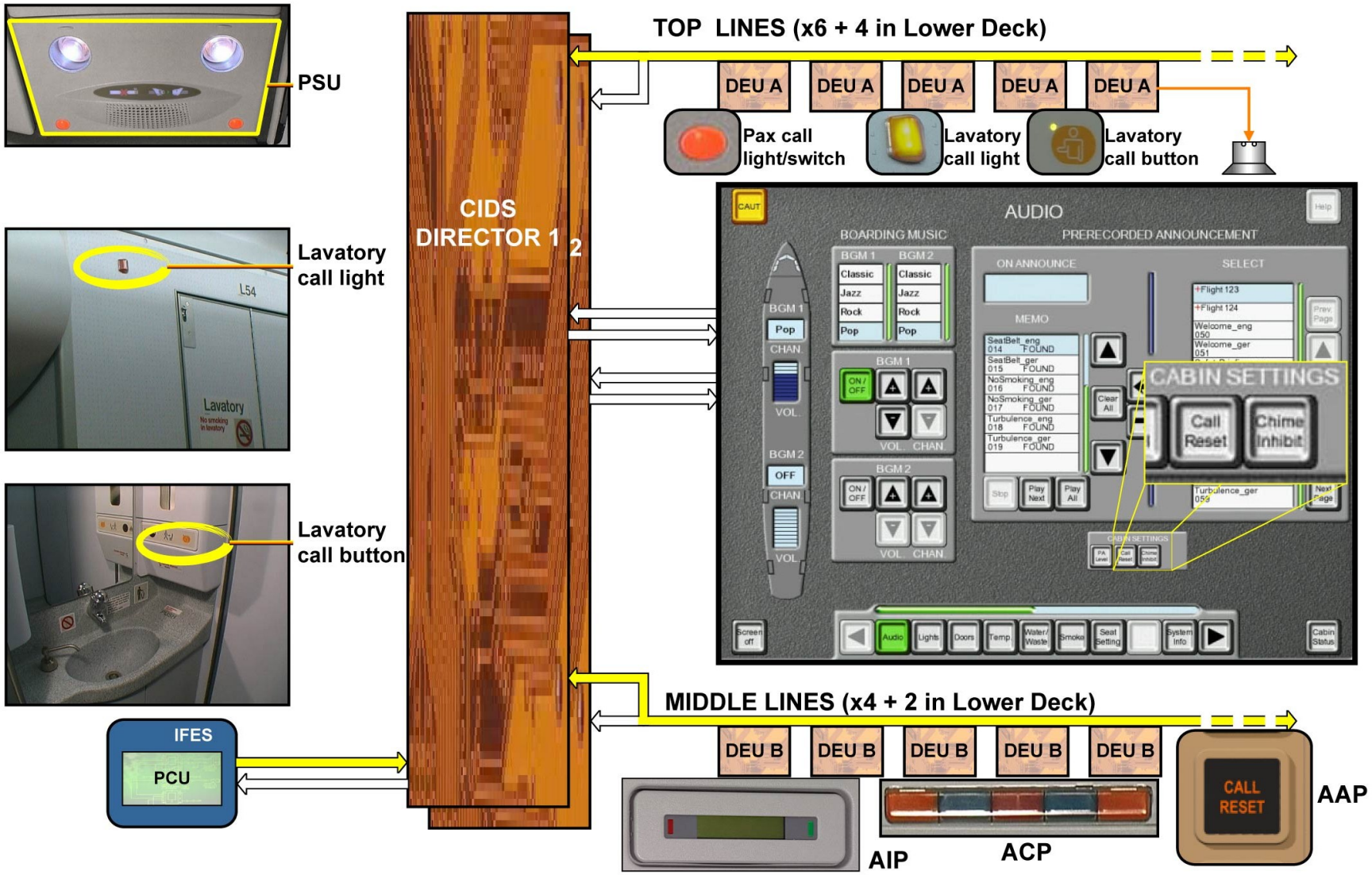

OPERATION - PAX CALL

CABIN INTERCOMMUNICATION DATA SYSTEM D/O (3)

OPERATION (continued)

CABIN LIGHTS

The cabin illumination system controls the illumination in the different areas. The cabin illumination is controlled from the CABIN LIGHTING page on the FAP or via buttons on the AAPs.
The FAP settings are sent to the CIDS Directors. The AAP settings are sent via the respective DEU B to the CIDS Directors. The active Director controls, via type A DEUs, the light tube intensity of the ballast units.
When the CIDS is not active, all CIDS controlled lights are set to full brightness. At the end of the CIDS power-up test, the lavatory lights are dimmed, all other cabin lights remain at full brightness.
On ground, the Main On/Off button sets all cabin and reading lights. Predefined intensity levels (BRT, DIM 1, DIM 2, Board, Climb or Cruise), fine adjustment or sequences can be selected. Pre-programmed scenarios make the cabin lights go from the actual intensity level to a predefined one in a certain time. Predefined intensity levels and sequences are programmed in the CAM.
In NIGHT light mode, the normal illumination is switched off and the tubes assigned as night-lights are switched on. The night-lights are part of the general illumination in certain dimming conditions (CAM programmed data).
As an option, it is possible to install a night light application, which is connected to the EPSUs. These special night-lights (Dot Lights) are switched on if the NIGHT light mode is selected. The dot lights are controlled from the CIDS Directors via the respective type B DEUs and the EPSUs.
With one or more engines running (oil pressure information sent by the EIVMU), the light intensity is dimmed automatically in the FWD entrance area if the cockpit door is open.
In case of rapid decompression information sent by the Cabin Pressure Controllers (CPCs), all lights are switched on at full brightness whatever the other settings.
The Reading Lights (R/Ls) are installed in the PSUs.
The P/Bs on the PSUs and the seat-mounted PCUs control the R/Ls.
If the R/Ls are switched on/off from the PSUs, a signal is sent directly to the PISA or RLPSU.
If the R/Ls are switched on/off from the PCUs, a signal is sent via the IFE system to the Directors, which transmit a signal via the type A DEUs to the PISA or RLPSU.
On the CABIN LIGHTING page, two buttons are used for the R/Ls. These two buttons are available only on ground for maintenance purposes.
The R/L Set button switches on all the R/Ls.
The R/L Reset button switches off all the R/Ls.

G7508471 - G7OT0T0 - FM23D700000003

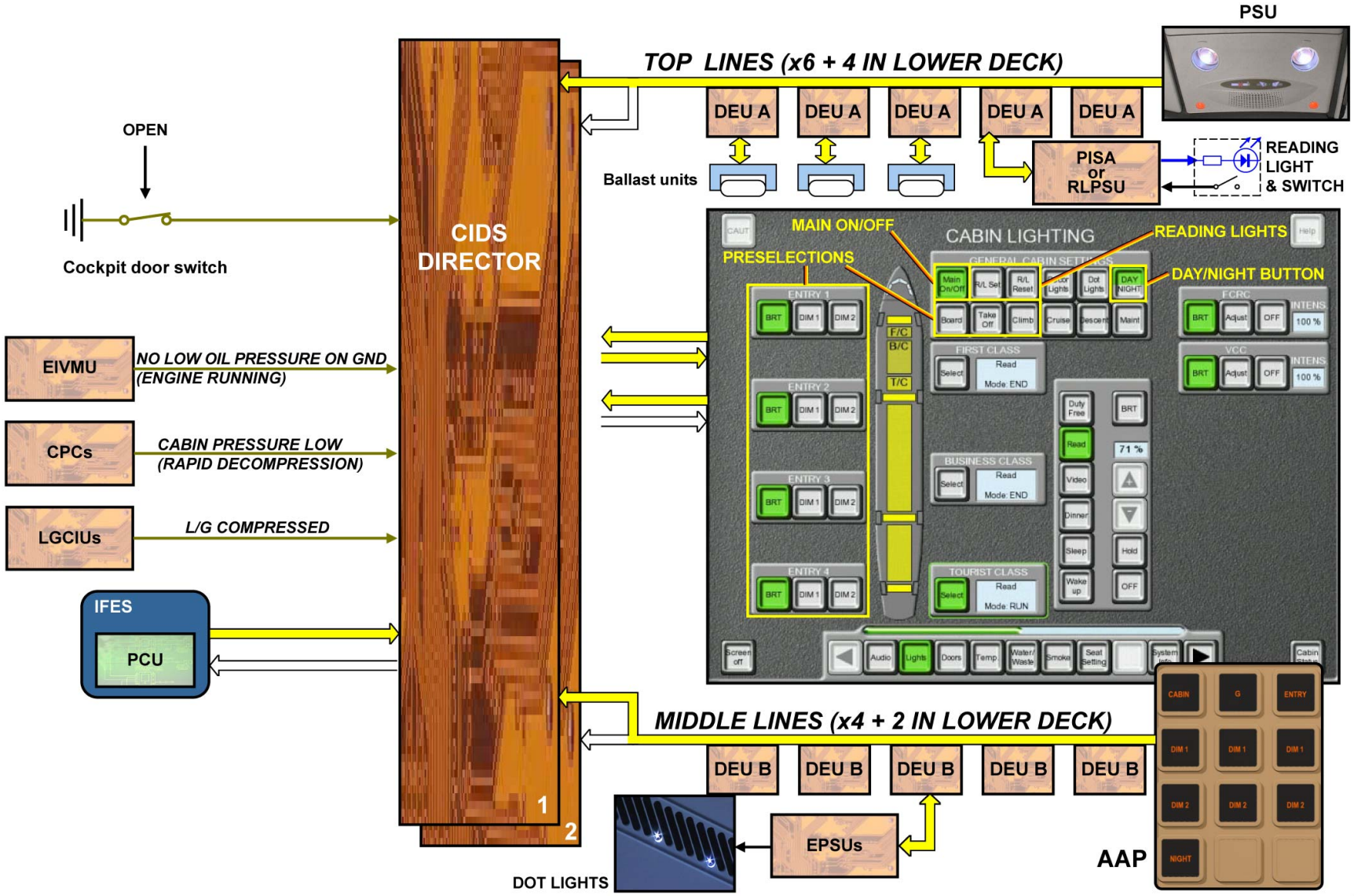

OPERATION - CABIN LIGHTS

G7508471 - G7OT0T0 - FM23D700000003

CABIN INTERCOMMUNICATION DATA SYSTEM D/O (3)

OPERATION (continued)

DOORS/SLIDES

The DOORS/SLIDES page of the FAP shows the status of each door (open/closed) and slide (armed/disarmed) and the status of each door bottle and slide bottle in case of low pressure.
The status of the doors and slides are transmitted from the SDAC to the Directors.
The pressure sensors send the signals via the related type B DEUs to the Directors.

G7508471 - G7OT0T0 - FM23D700000003

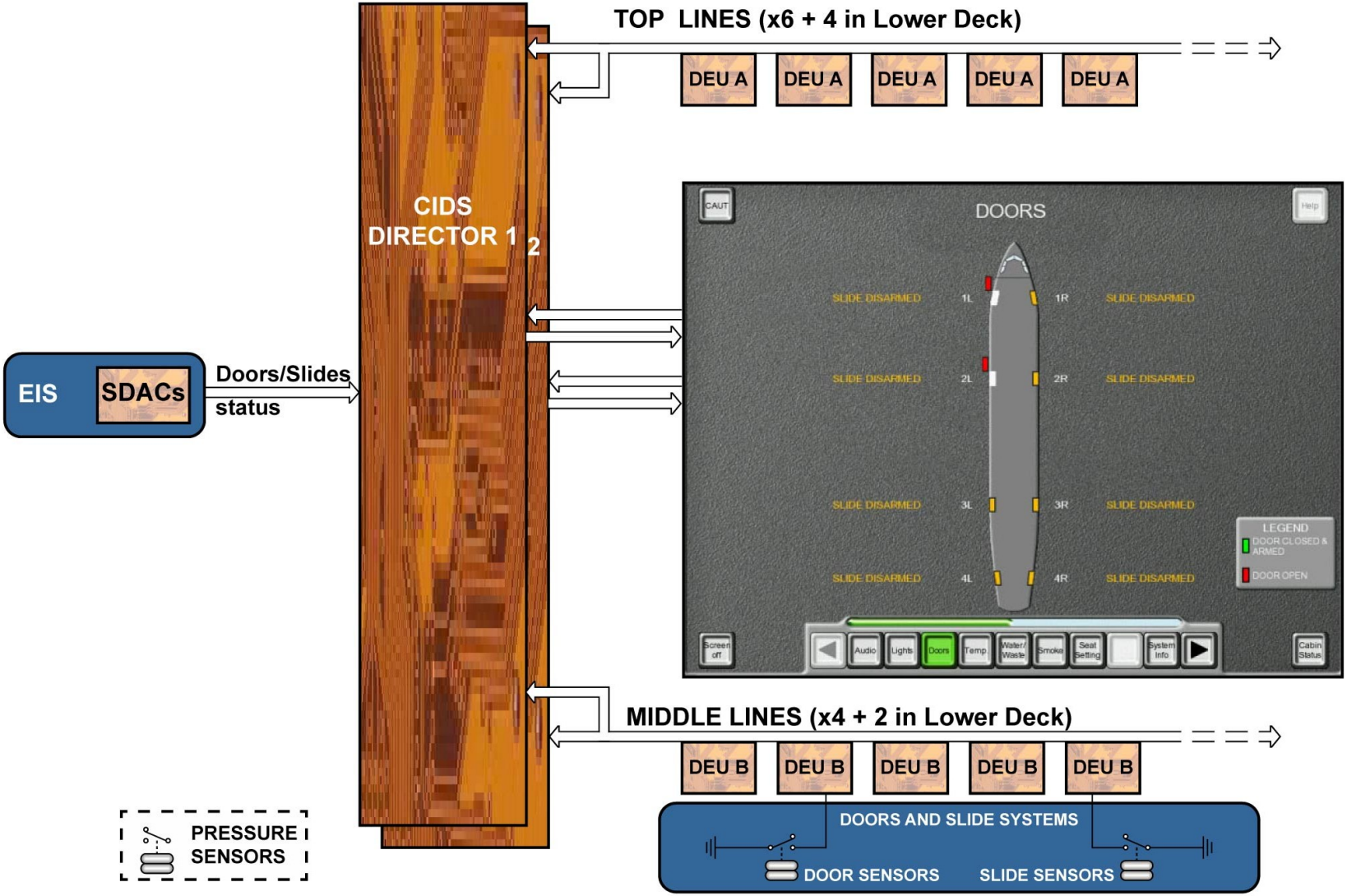

OPERATION - DOORS/SLIDES

G7508471 - G7OT0T0 - FM23D700000003

CABIN INTERCOMMUNICATION DATA SYSTEM D/O (3)

OPERATION (continued)

AIR CONDITIONING

On the CABIN TEMPERATURE page of the FAP, the actual temperature in all cabin areas is indicated.
The temperature data is transmitted by the Environment Control System (ECS) to the Directors. The active Director sends this data to the FAP.
The cockpit selected temperature for all cabin areas is also indicated.
The CIDS has the capability to perform fine adjustment for each cabin zone. The temperature correction is limited to plus or minus 3°C from the general temperature selection in the cockpit.
If a new targeted temperature is selected the signals are sent from the FAP, via the Directors, to the ECS.
The Reset button is used to reset all areas targeted temperature to cockpit selected temperature.

G7508471 - G7OT0T0 - FM23D700000003

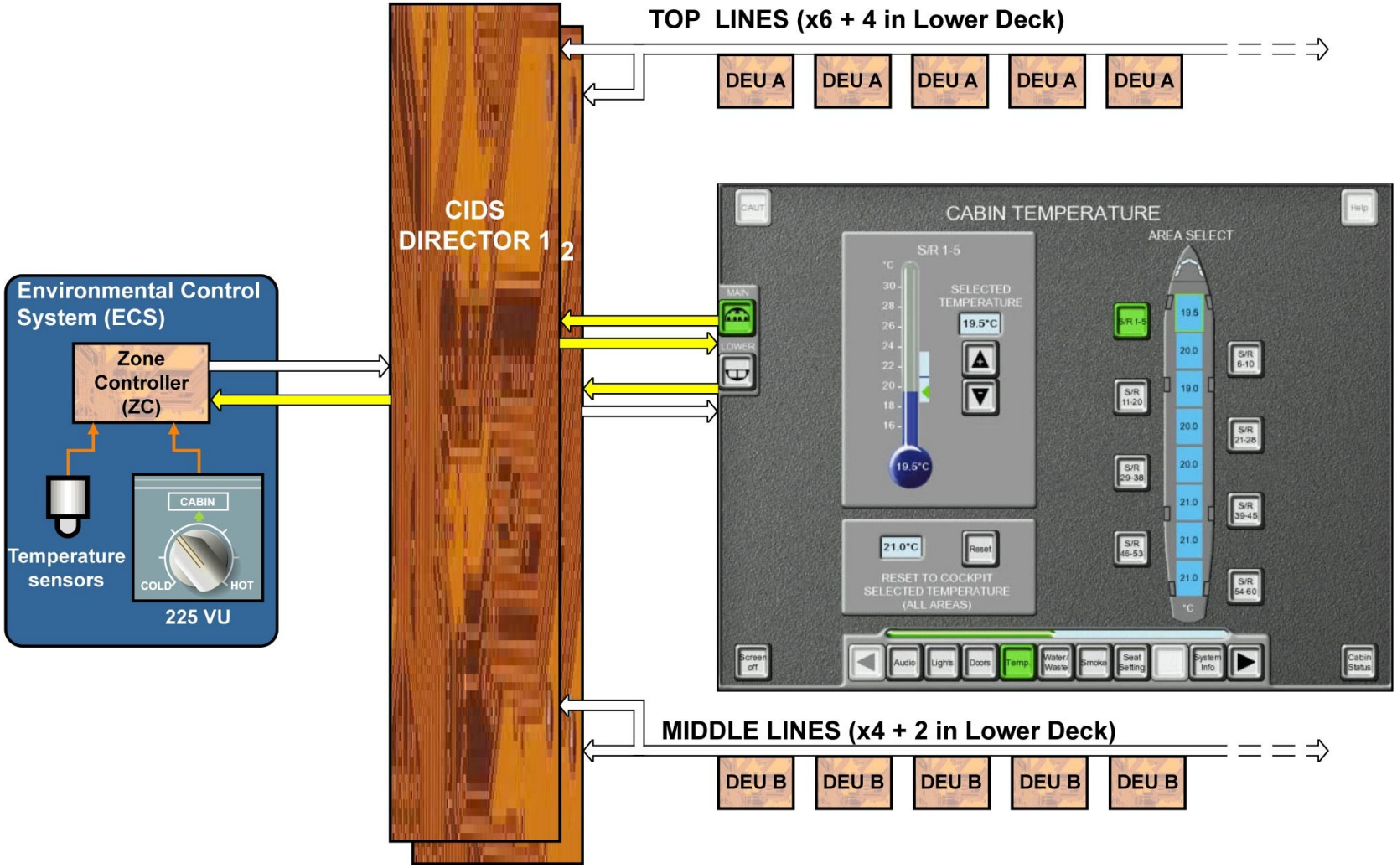

OPERATION - AIR CONDITIONING

G7508471 - G7OT0T0 - FM23D700000003

CABIN INTERCOMMUNICATION DATA SYSTEM D/O (3)

OPERATION (continued)

WATER AND WASTE

The WATER / WASTE FAP page shows the filling level of the water tank on the FAP and gives the commands for the pre-selection of the water quantity.
The water quantity is transmitted from the Vacuum System Controller (VSC) to the Directors. The active Director sends the signal to the FAP where the actual quantity is indicated.
After pre-selection of a new filling level, the information is transmitted from the FAP to the Directors. The active Director transmits a signal to the VSC which performs the alteration.
The WATER / WASTE FAP page also shows the filling level of the waste tanks on the FAP. Additionally, the inoperative lavatories are indicated on the FAP.
The waste quantity level is transmitted from the VSC to the Directors. The active Director sends this information to the FAP, where the actual quantity is indicated.
If the VSC indicates a lavatory failure, the respective signal is sent to the Directors. The active Director transmits the signal to the FAP where a related message indicates the fault.
In case of a lavatory failure, the active Director sends signals to the type B DEUs to switch on the respective ACP light segment, and the related message is shown on the AIP.
The active Director also sends to the type A DEUs the signal to activate the chime in the cabin and the respective lavatory call light.

G7508471 - G7OT0T0 - FM23D700000003

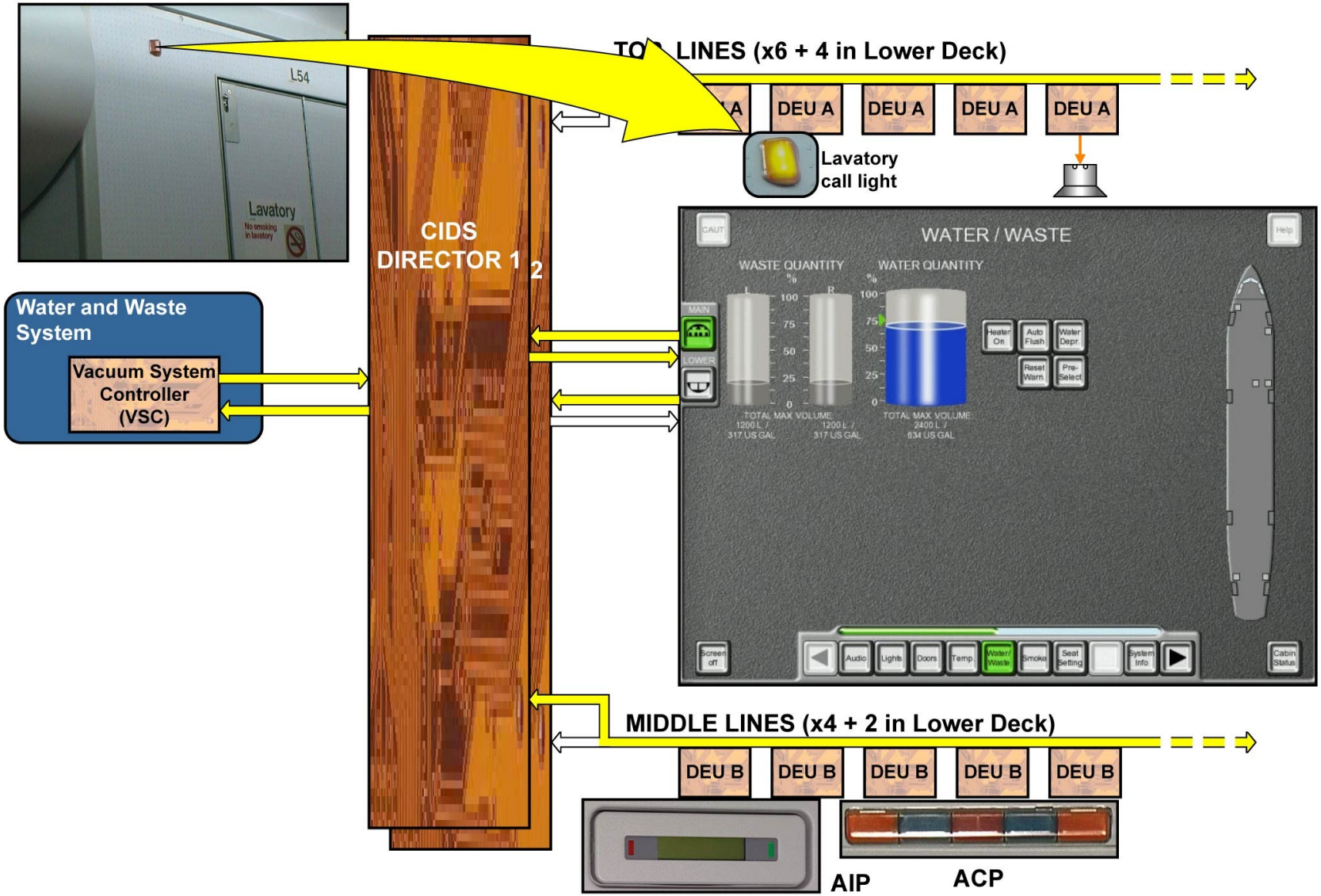

OPERATION - WATER AND WASTE

CABIN INTERCOMMUNICATION DATA SYSTEM D/O (3)

OPERATION (continued)

SMOKE DETECTION

The CIDS gives the visual and aural indications in the cabin, if a smoke alert is received from the smoke-detection system.
After smoke is detected, the Smoke Detection Control Unit (SDCU) transmits a signal to the CIDS Directors. The active Director sends a signal to the FAP where the SMOKE page comes up automatically.
The CIDS indicates smoke alerts detected in the following areas:
- lavatories,
- FCRC,
- LD-MCR,
- the Video Control Center (VCC).

On the SMOKE page, the location of the smoke alert is clearly shown.
The active Director also transmits a signal to the type A DEUs. The type A DEUs activate a chime sequence in the loudspeaker. A smoke alert from the lavatory activates the respective flashing lavatory call light.
The respective ACP light segment flashes and the related message is shown on the assigned AIP.
If smoke is no longer detected, the SDCU automatically resets all visual and aural indications.
To reset the visual and aural indication in the cabin manually you have to push the SMOKE RESET and Smoke Reset buttons either on the SMOKE page on the FAP, on the FAP hard key or on the AAP.
This affects only the cabin indications. The FAP SMOKE page and the various smoke messages remain displayed as long as the smoke condition persists.

G7508471 - G7OT0T0 - FM23D700000003

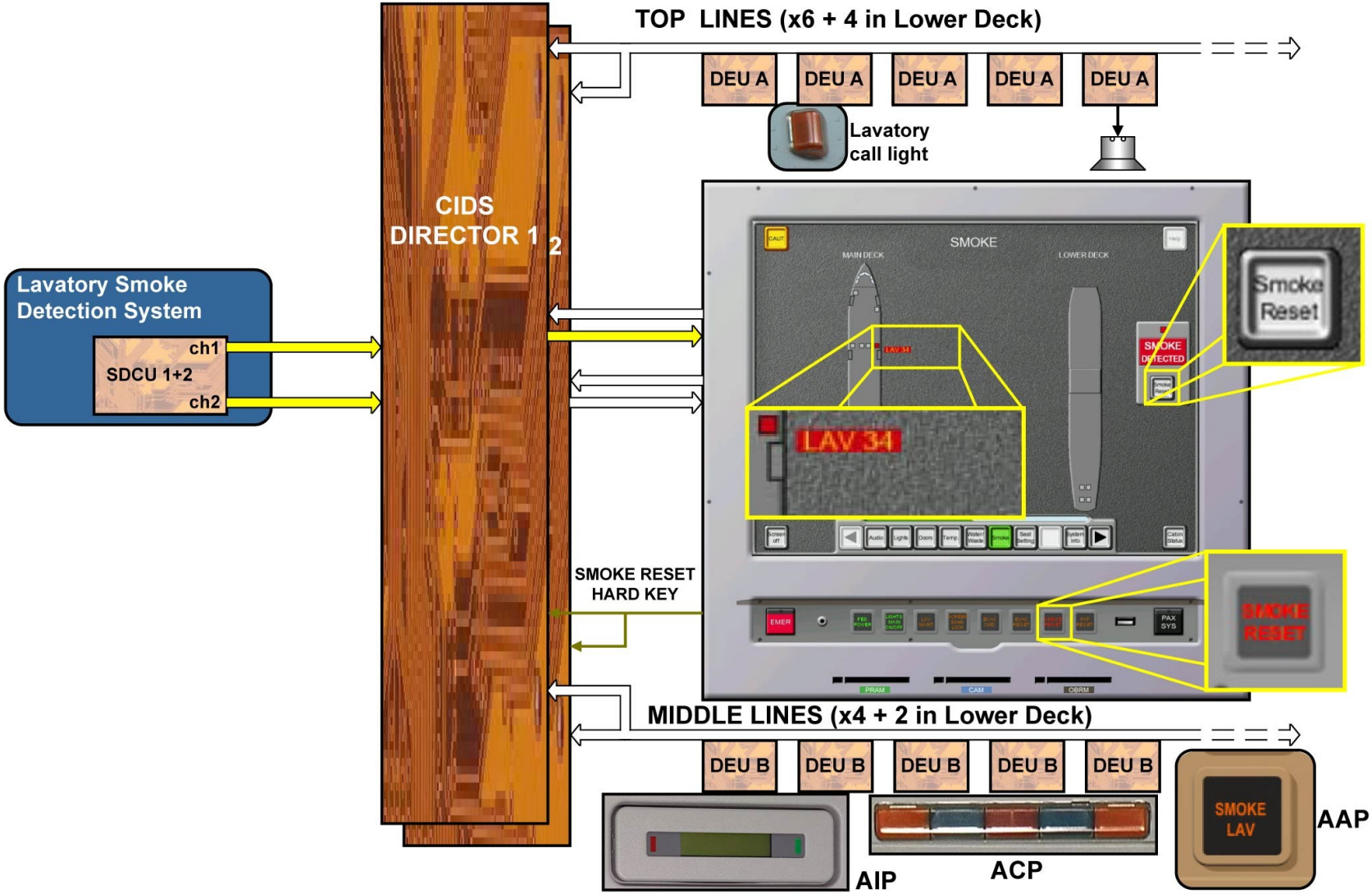

OPERATION - SMOKE DETECTION

G7508471 - G7OT0T0 - FM23D700000003

CABIN INTERCOMMUNICATION DATA SYSTEM D/O (3)

OPERATION (continued)

EMERGENCY EVACUATION

The emergency evacuation signaling system is indicating that the evacuation process shall be started. The EMER command can be initiated from the FAP, via the EVAC CMD button, and/or from the cockpit, via the EVAC panel.
The EVAC switch is used by the cabin crew to initiate the evacuation process or not.
In the CAPT position, only the cockpit crew can activate the EVAC COMMAND. The cabin crew selecting the EVAC CMD on the FAP will then only light the EVAC indication in the cockpit.
In the cockpit, the aural indication by the horn is initiated in case of EVAC CMD initiated or asked from the FAP.
The horn can be shut off by using the HORN OFF button.
The EVAC command is confirmed (or asked) by the cockpit crew pushing the COMMAND button. The ON indication lights up in white.
Indication in the cabin is given through an emergency tone broadcast by the loudspeakers. At the same time, the AIPs will display EVACUATION ALERT and their red light will flash. The ACPs will illuminate the respective field.
The EVAC reset is done
- in the cockpit by pushing the EVAC CMD P/BSW a second time,
- in the cabin using the EVAC RESET button on the FAP or AAPs.

G7508471 - G7OT0T0 - FM23D700000003

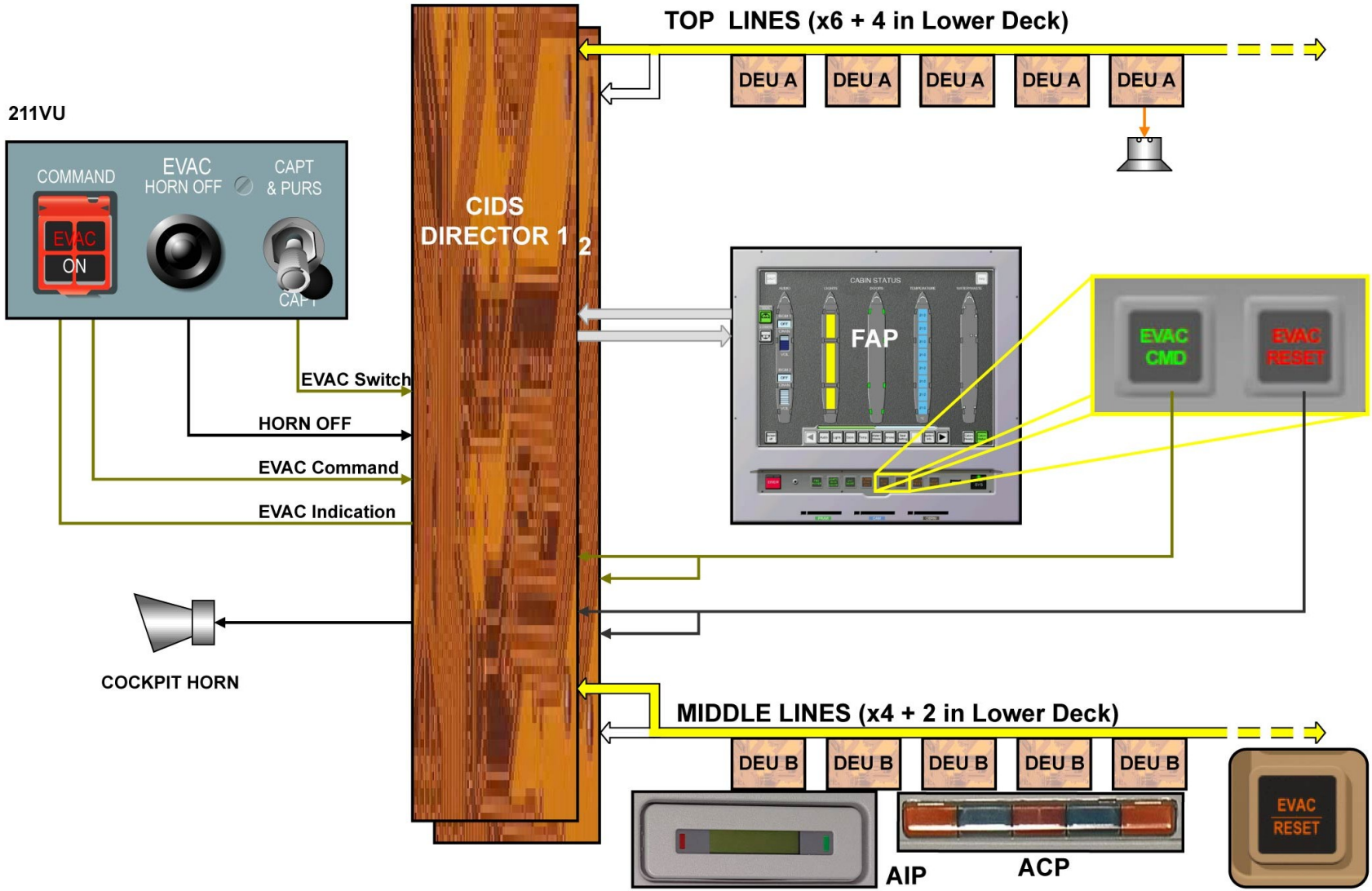

OPERATION - EMERGENCY EVACUATION

CABIN INTERCOMMUNICATION DATA SYSTEM D/O (3)

OPERATION (continued)

CABIN READY SIGNALING (OPTION)

The cabin ready signaling is used by the cabin crew to inform the cockpit crew about the cabin status. It is initiated on the FAP CABIN STATUS page. The Cabin Ready button is displayed on the lower RH corner.

The information is relayed by the Directors to the SDAC to be displayed on the ECAM EWD memo. If this function is activated, the cabin ready signaling becomes part of the landing and take-off checklist.

From Grey status, the button becomes green when it is selected. At the same time in the cockpit on the ECAM, the CABIN CHECK message becomes CABIN READY.

The enable/reset logic of the button is programmed in the CAM. It will depend on flight phases and various other conditions.

G7508471 - G7OT0T0 - FM23D700000003

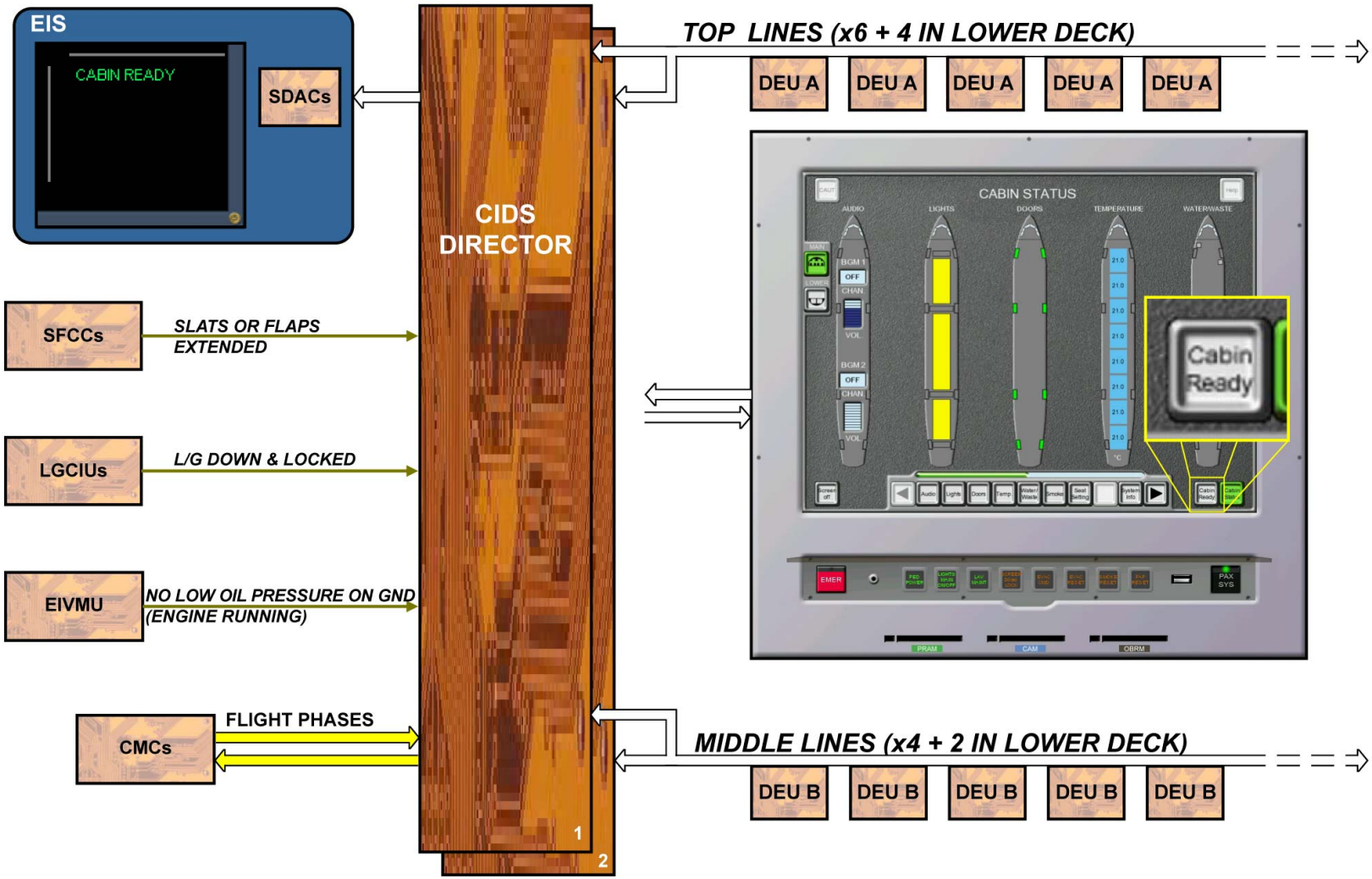

OPERATION - CABIN READY SIGNALING (OPTION)

G7508471 - G7OT0T0 - FM23D700000003

CABIN INTERCOMMUNICATION DATA SYSTEM D/O (3)

OPERATION (continued)

MAINTENANCE

The CIDS is designed to continuously monitor its own performance and that of the connected equipment. Directors, FAP, DEUs, PISAs, AAPs and AIPs contain BITE circuits.
The CIDS Directors store the detected faults in the CIDS units and the connected systems and send them to the CMCs.
In the event of major faults, respective information is additionally sent to the ECAM display via the SDACs.
On ground, the MCDUs are used to dialogue with the CIDS via system report/test menus. This enables system configuration, Line Replaceable Unit (LRU) identification and tests to be done.
Some of the faults and test results are also sent to the FAP to be displayed on the related page.
The CIDS provides a Multi-Purpose Bus (MPB) for onboard monitoring in case of failure of the CMCs. Since the CIDS is a type 1 system, monitoring of the internal and external system status, conditions and activities can be done through the ARINC 429 bus.
The bus is accessible via a test plug interface in the avionics compartment.

G7508471 - G7OT0T0 - FM23D700000003

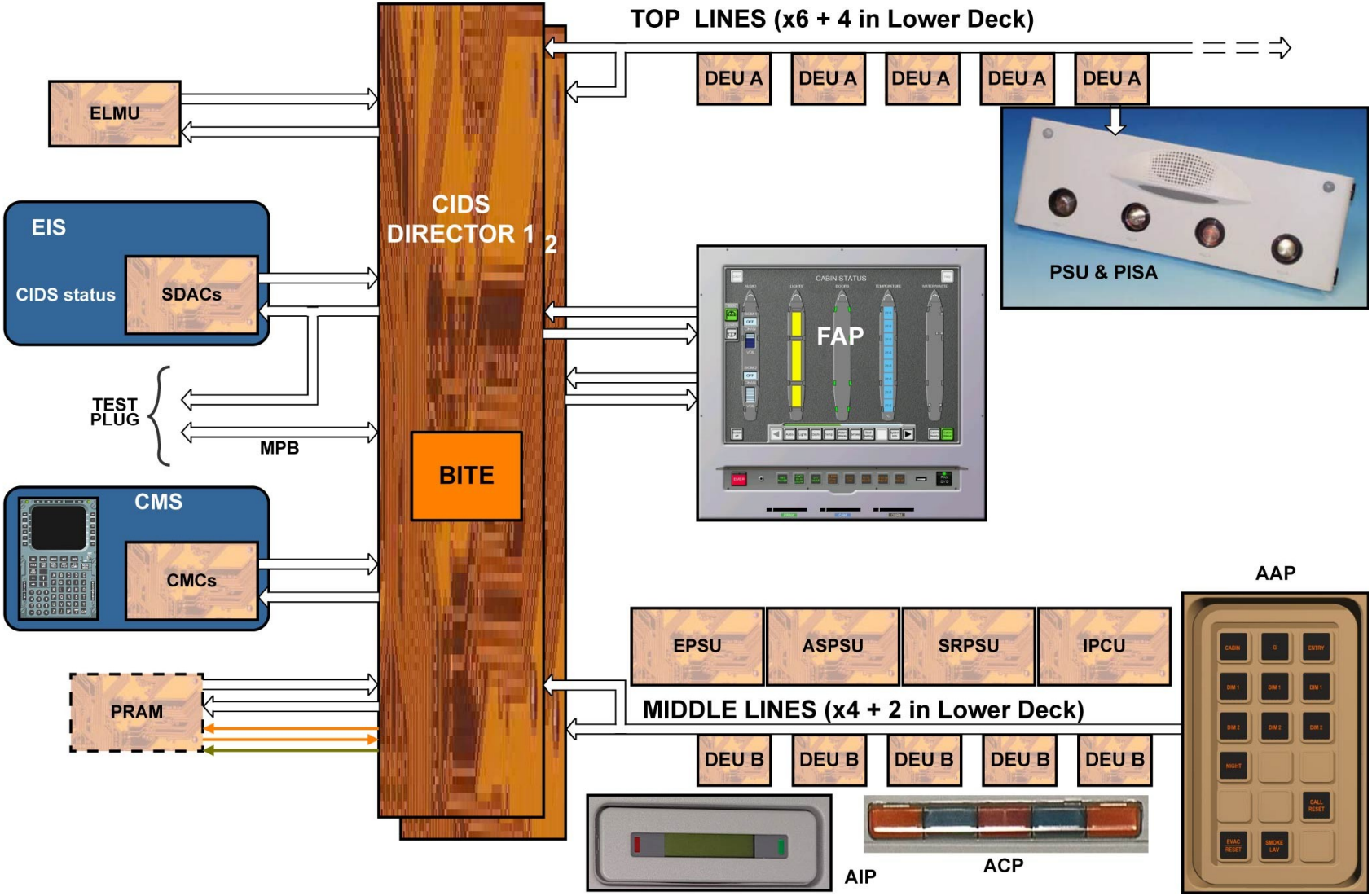

OPERATION - MAINTENANCE

G7508471 - G7OT0T0 - FM23D700000003

CABIN INTERCOMMUNICATION DATA SYSTEM D/O (3)

CIDS PROGRAMMING

The CIDS is designed to be customizable. A system reconfiguration for the installation of options, cabin reconfiguration or CIDS expansion is limited to software database changes e.g. the OBRM and the CAM.
The OBRM defines in particular the operating software of the CIDS, but also all connections to this system and emergency functions.
The CAM defines the cabin layout. According to the program, the Directors will consider the various cabin features and options validated by the CAM software and will ensure the proper operation of the CIDS. This software is in the CAM A part. The CAM also has another essential role: it is to define all messages and page layouts of the FAP screen. It is known as CAM B. The CAM has 120.000 parameters to store all those items.
During the CIDS power-up, the Directors will compare the CAM and OBRM layout with their memories. If they find a difference, OBRM and CAM data will be downloaded. In the case of a total FAP failure combined with loss of the CAM and the OBRM flash cards, the CIDS will operate in restricted operating mode (BASIC functions active), thanks to the simplified operating software and cabin layout memory stored in the Directors.
The major CIDS programming functions available on ground via the FAP are:
- layout change,
- audio level adjustment,
- FAP set-up.

NOTE: Note that the FAP pages listed below are protected from inadvertent use by a password except for the FAP SET-UP page.

G7508471 - G7OT0T0 - FM23D700000003

CIDS PROGRAMMING

G7508471 - G7OT0T0 - FM23D700000003

CABIN INTERCOMMUNICATION DATA SYSTEM D/O (3)

CIDS PROGRAMMING (continued)

LAYOUT CHANGE

The CIDS enables the cabin zone boundaries and the no smoking zone boundaries to be relocated. The CABIN PROGRAMMING page has to be selected via the system and function keys on the bottom of the screen.
Zone boundaries are situated between two seat rows. Each cabin zone has to contain a minimum of one seat row.
The NON SMOKER A/C button is used to set the entire cabin as a no smoking area.
Without saving the new entries, the previous settings remain valid after leaving the programming panel. To save the changes, push the Save button. The layout is saved in the CAM as a modified layout.
The CAM contains up to three basic cabin layouts. These layouts are selectable on the LAYOUT SELECTION page.
Each time new settings are saved, a modified layout is created under the basic layout used before modifications. If new settings are made upon a modified layout, saving the new layout parameters will increment the modified layout count number.

G7508471 - G7OT0T0 - FM23D700000003

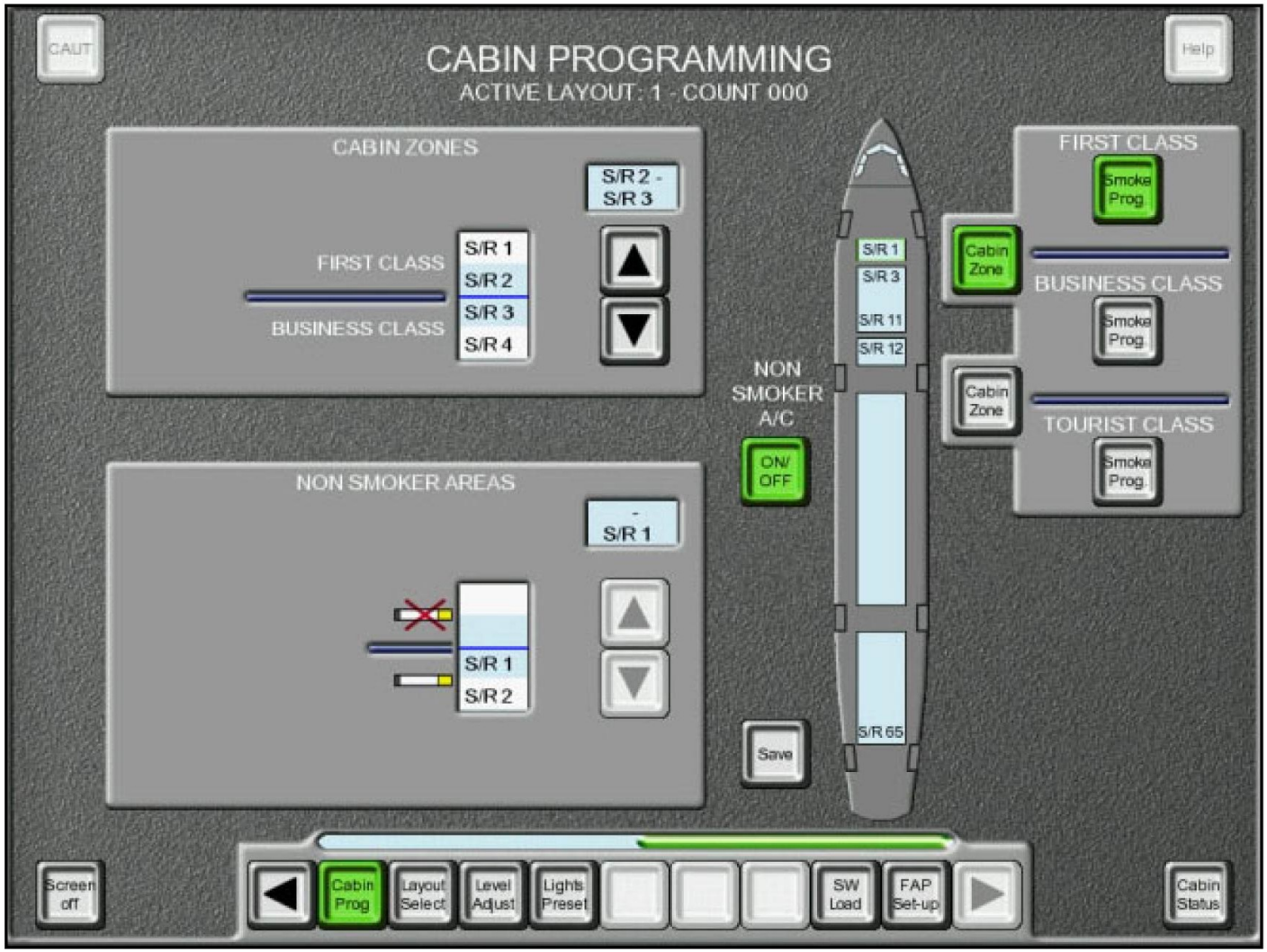

CIDS PROGRAMMING - LAYOUT CHANGE

G7508471 - G7OT0T0 - FM23D700000003

CIDS PROGRAMMING - LAYOUT CHANGE

G7508471 - G7OT0T0 - FM23D700000003

This Page Intentionally Left Blank

G7508471 - G7OT0T0 - FM23D700000003

CABIN INTERCOMMUNICATION DATA SYSTEM D/O (3)

CIDS PROGRAMMING (continued)

LEVEL ADJUSTMENT

The CIDS enables the volume of chimes and announcements to be changed in all defined cabin areas independently. To do so, the LEVEL ADJUSTMENT page has to be selected via the system and function keys on the bottom of the screen.
The area selection is made by pushing the related Adjust button. Then you can adjust announcement and chime volume in the selected area. The adjustment goes from -6 to +6 dB related to the nominal volume. The Default button resets all parameters to the CAM default values. To save the changes, push the Save button. Without saving the new entries, the previous settings remain valid after leaving the programming panel.

G7508471 - G7OT0T0 - FM23D700000003

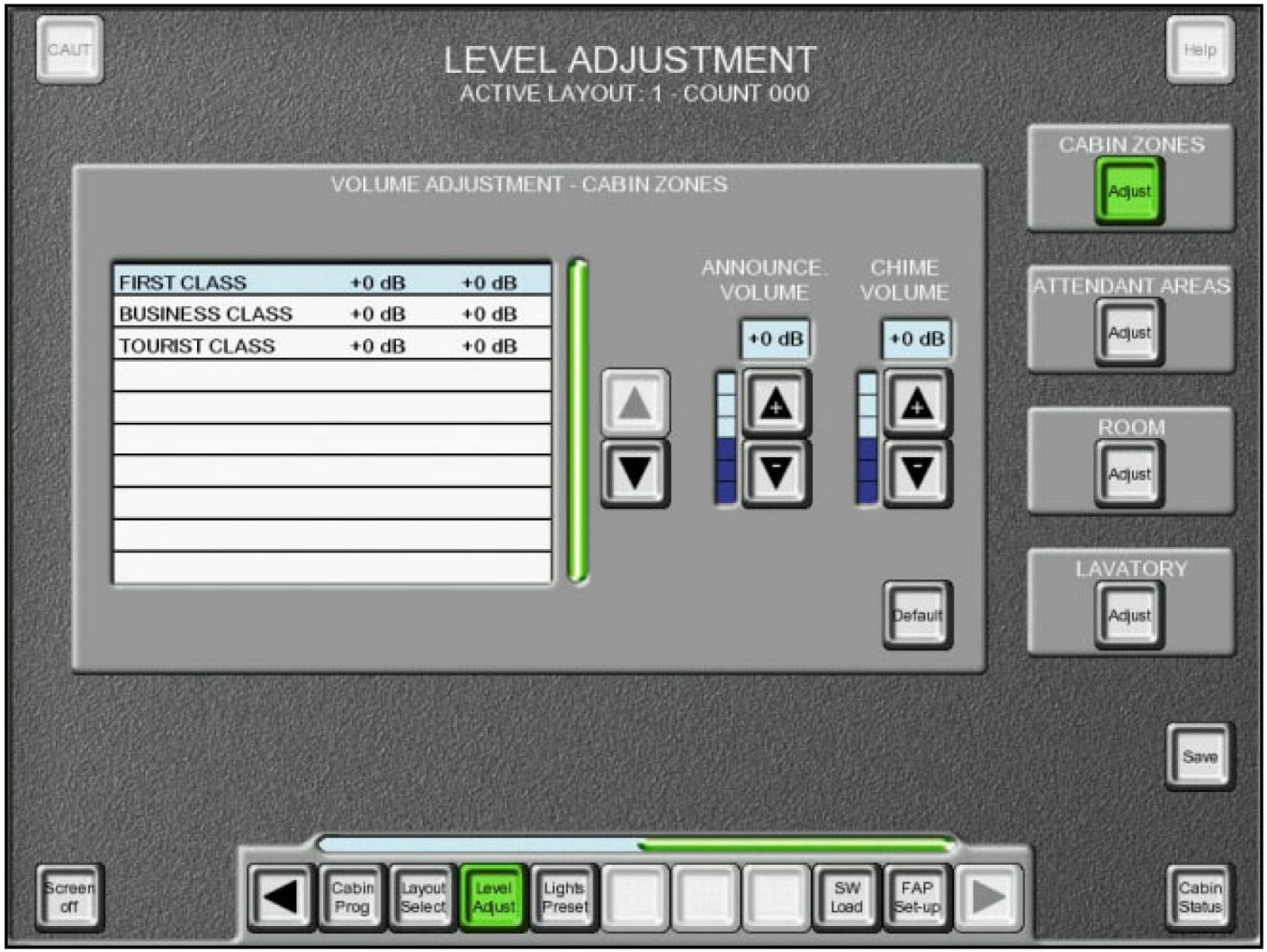

CIDS PROGRAMMING - LEVEL ADJUSTMENT

G7508471 - G7OT0T0 - FM23D700000003

CABIN INTERCOMMUNICATION DATA SYSTEM D/O (3)

CIDS PROGRAMMING (continued)

FAP SET-UP

The CIDS enables the brightness of the screen to be changed and the volume settings to be adjusted for the FAP internal loudspeaker and headphone. The FAP Set-Up page has to be selected via the system and function keys on the bottom of the screen.
The TOUCHSCREEN CLICK button makes the FAP emit a key click through the internal loudspeaker each time a function is selected. It becomes green when set to ON.
The Default button resets all the FAP Set-Up parameters to the CAM default values.
To save the changes, push the Save button. Without saving the new entries, the previous settings remain valid after leaving the programming panel.

G7508471 - G7OT0T0 - FM23D700000003

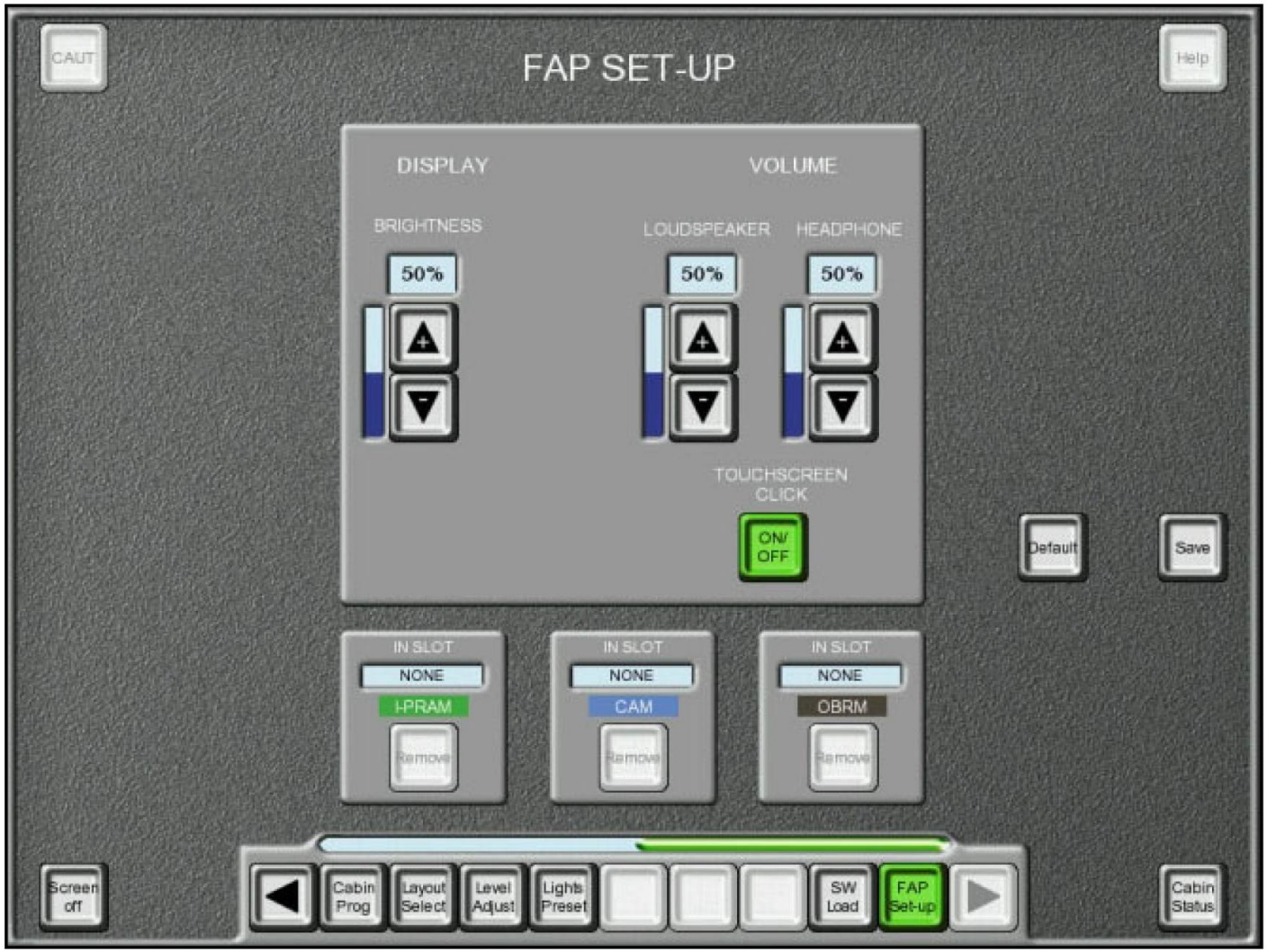

CIDS PROGRAMMING - FAP SET-UP

G7508471 - G7OT0T0 - FM23D700000003

EMERGENCY LOCATOR TRANSMITTER SYSTEM D/O(CEIS) (3)

GENERAL

The Emergency Locator Transmitter (ELT) function is to transmit distress signals, it can be used in automatic mode installed in the aircraft or manually when you use the ELT in portable mode. The ELT system transmits on 3 frequencies, homing-signals for civil and military, and to satellite system. The battery-pack, installed in the ELT housing, supplies the power to operate the system. The satellite system transmits distress signal to a local user terminal, when it is in range. The local user terminal receives range in a radius of approximately 2.500 Km (1367.00 NM). When the local user terminal is not in receiving range, the satellite system stores the distress signal until transmission is possible. The local user terminal automatically processes the distress signal to identify and show the position of the aircraft to a radius of approximately 1.8 Km (5900.00 ft). The processed data is transmitted to a mission control center. The mission control center sends the data to an applicable rescue coordination center, where search and rescue operations are started. The civil and military homing-signals are used to find the aircraft in the final stage of search and rescue operation.

NOTE: In technical documentation, the ELT is shown in ATA 25.

ELT DESCRIPTION

The ELT system is composed of:
- an emergency locator, installed in a support assembly which is installed above the ceiling panel in the AFT utility area, between frame FR63 and FR67,
- a programming-box assembly, which is a part of the support assembly and is connected by a short cable to the ELT,
- a remote control panel, installed on the cockpit overhead panel,
- an external antenna, linked to the ELT which is installed on the upper external fuselage between FR64 and FR65,

EMERGENCY LOCATOR TRANSMITTER

The ELT has a cylindrical orange-colored housing which includes these components:
- placards attached to the housing (Identification, expiry date and operating instructions, battery),
- an electronic assembly which is kept in the cylindrical housing and his assembly components are an activation board, which includes the G-switch, and a triple-frequency transmitter board,
- a high-powered battery-pack which is kept in the cylindrical housing, supplies the power to operate the ELT,
- an interface which includes an ANT connector to connect the whip or external antenna, a TX indicator to indicate a BITE test result or when ELT operates, an AUTO/OFF/ON switch to select desired mode, and a TC connector used to connect a remote control panel, a programming-box assembly and programming/test/reading equipment.
- a float and a whip-antenna (referred to as antenna).

PROGRAMMING-BOX ASSEMBLY

The interface on the front face of the programming-box assembly includes:
- a connector for the connection from the remote control panel,
- a connector for the connection to the TC connector on the ELT,
- a red indicator.

REMOTE CONTROL PANEL

The front panel of the remote control panel includes:
- an ARMED/ON switch, which has a switch guard to prevent inadvertent manipulation,
- an ON indicator,
- a TEST/RESET P/B.

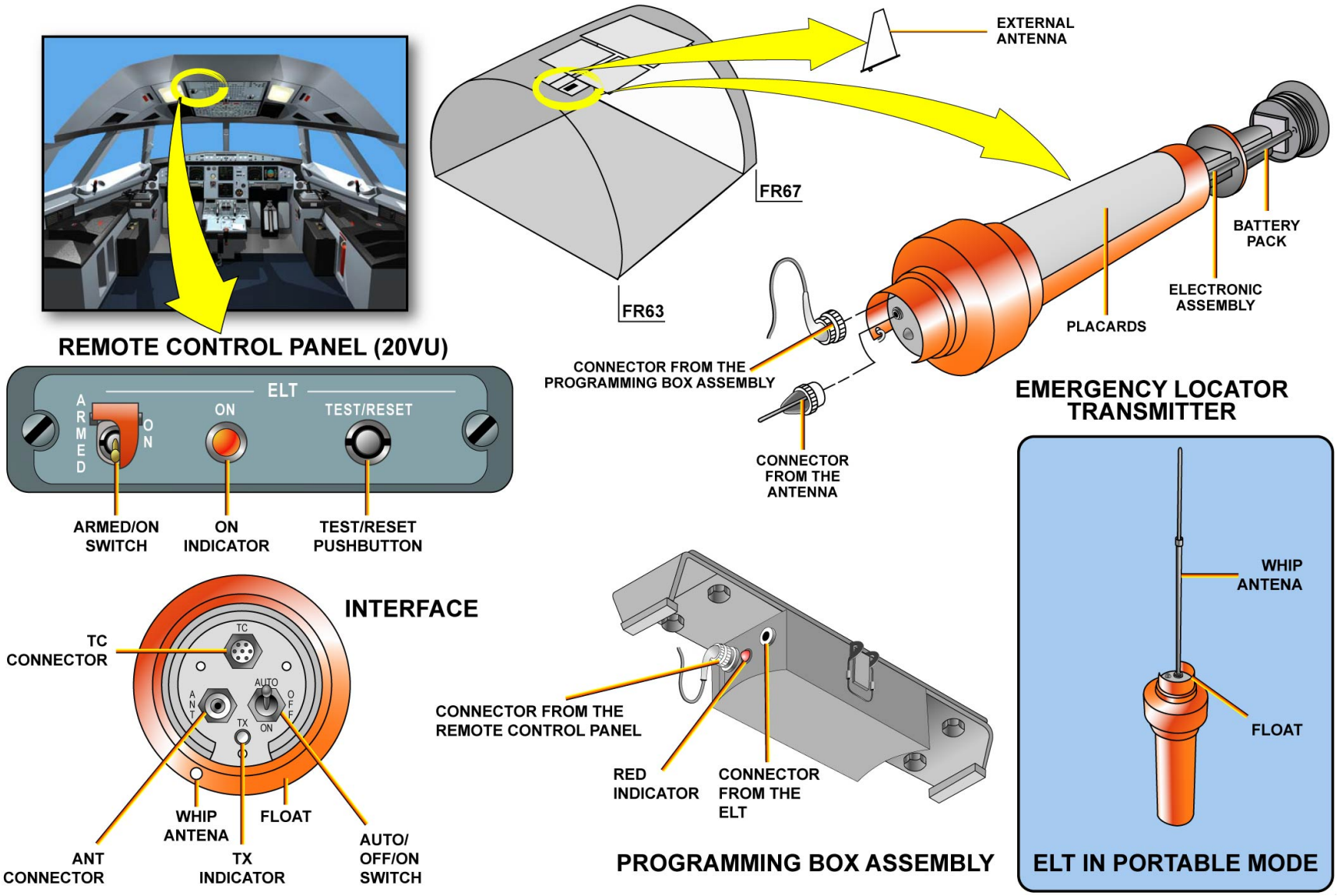

GENERAL & ELT DESCRIPTION

G7508471 - G7OT0T0 - FM23DE000000001

EMERGENCY LOCATOR TRANSMITTER SYSTEM D/O(CEIS) (3)

ELT OPERATION

The ELT can be operated in automatic or manual mode.

EMERGENCY LOCATOR TRANSMITTER

When you use the ELT in portable mode it is operated manually, this is done by removing the antenna and connecting it to the ANT connection on the ELT. The AUTO/OFF/ON switch located on the front face of the ELT has these functions:
- set to the AUTO position for automatic operation of the ELT. An automatic operation occurs when the ELT is connected to its system in the A/C, and the G-switch detects an impact sufficient to start transmission,
- set to the OFF position, when the ELT is connected to its system in the A/C and requires maintenance, when the ELT is disconnected from its system and removed from the A/C, or to stop transmission,
- set to the ON position for manual operation of the ELT. A manual operation occurs when the ELT is connected to its system in the A/C and the G-switch is not triggered, but a signal must be transmitted (aircraft out of operation, injured passengers/crew members), when the ELT is connected to its system in the A/C and you do a self-test (BITE), or when the ELT is disconnected from its system, removed from the A/C and used in portable mode.

An accidental operation occurs when the ELT is connected to its system in the A/C, and the G-switch starts transmission without a real emergency (hard landing).

PROGRAMMING-BOX ASSEMBLY

The programming-box assembly automatically transfers data (information and identification of the A/C) to the ELT, when the programming-box assembly is connected to the TC connector. After the data transfer occurs, the programming-box assembly verifies the validity of the data transferred. When all programming and verification is completed the programming-box assembly goes automatically into standby mode. The programming-box assembly is not operated when the ELT is started from the remote control panel, and has no effect on the signals between the remote control panel and the ELT. If the programming-box assembly becomes defective the connector from the remote control panel can be connected directly to the TC connector. You can stop ELT transmission when you disconnect the programming-box assembly connector from the TC connector, the AUTO/OFF/ON switch must be set to the OFF position. The programming-box assembly has a red indicator, which comes on to indicate the BITE test result.

REMOTE CONTROL PANEL

The remote control panel controls and indication are as follows:
The ARMED/ON switch is set to the ARMED position for automatic operation of the ELT. The switch is kept in the ARMED position by a switch guard which stops accidental operation of the ELT. The ARMED/ON switch is set to the ON position for manual operation of the ELT. You must lift the switch guard to set the ARMED/ON switch to the ON position. Pressing the TEST/RESET pushbutton starts a BITE test of the ELT, pressing again stops the operation of the ELT, and returns the ELT to its AUTO mode after a complete BITE test sequence. The ON indicator comes on when the ELT operates, or to indicate the BITE test result. When the ELT operates the ON indicator flashes one time, then comes on continuously for 100 seconds. After 100 seconds it flashes continuously (on for 1 second - off for 1.5 seconds).

BITE TEST

This BITE test action can be done by means of the ELT or the remote control panel on the front face of the ELT, the BITE test is done by, setting the ON/OFF/AUTO switch to the AUTO position and to connect

G7508471 - G7OT0T0 - FM23DE000000001

the programming-box assembly to the TC connector, or on the remote control panel, by pushing the TEST/RESET P/BSW, these actions occur:
- the red indicator comes on, on the programming-box assembly,
- the TX indicator and the buzzer operate, on the ELT,
- the ON indicator flash then comes on, on the remote control panel,
- the ELT indicator flashes then comes on, on the external power panel,
- the mechanic call-horn operates, in the nose-landing-gear well.

NOTE: Do not do an annunciator light test during the test of the ELT system. If you do, you can cause damage to an internal relay of the ELT.
Do not do the ELT test for longer than 150 seconds. If you do, the ELT will send distress signals and rescue operations will start.

G7508471 - G7OT0T0 - FM23DE000000001

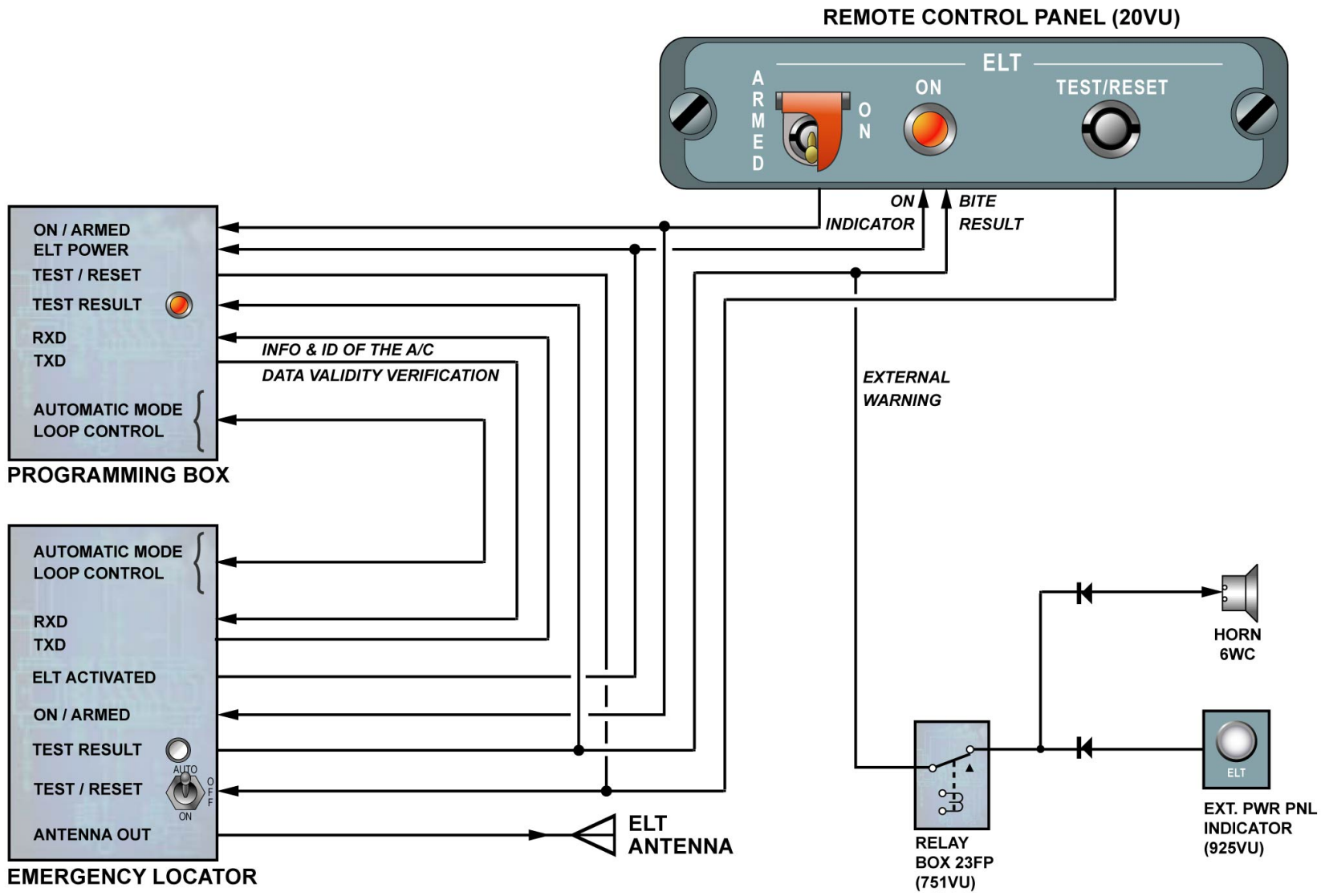

ELT OPERATION & BITE TEST

G7508471 - G7OT0T0 - FM23DE000000001

This Page Intentionally Left Blank

G7508471 - G7OT0T0 - FM23DE000000001

EMERGENCY LOCATOR TRANSMITTER SYSTEM D/O(ELTA) (3)

GENERAL

The Emergency Locator Transmitter (ELT) function is to transmit distress signals. It can be used in automatic mode installed on board the aircraft or manually when you use the ELT in portable mode. The ELT system transmits on 3 frequencies homing-signals for civil and military, and to satellite system. The battery-pack, installed in the ELT housing, supplies the power to operate the system. The satellite system transmits distress signal to a local user terminal, when it is in range. The local user terminal receives within a radius range of approximately 2.500 Km (1367 NM). When the local user terminal is not within the receiving range, the satellite system stores the distress signal until transmission is possible. The local user terminal automatically processes the distress signal to identify and show the position of the aircraft within a radius of approximately 1.8 Km (5900 ft). The processed data is transmitted to a mission control center. The mission control center sends the data to an applicable rescue coordination center, where search and rescue operations are started. The civil and military homing-signals are used to find the aircraft in the final stage of search and rescue operation.

NOTE: In technical documentation, the ELT is shown in ATA 25.

ELT DESCRIPTION

The ELT system is composed of:
- An emergency locator, installed in a bracket, held in position with two buckles and straps, with the interface in flight direction. The bracket is installed above a ceiling panel in the AFT utility area, between FRame 63 and FR67,
- An optional remote control panel, installed on the cockpit overhead panel,
- A ware harness is installed between the ELT and the Remote Control Unit (RCP),
- An external antenna, linked to the ELT which is installed on the upper external fuselage between FR66 and FR68,
- A mounting bracket.

EMERGENCY LOCATOR TRANSMITTER

The ELT has an orange aluminum with two covers, including these following components:
- Placards attached to the housing (Identification, strap, instruction, type and battery),
- An electronic board,
- An interface,
- A not rechargeable battery pack (voltage 6v,capacity: 10.5 A/h)

The electronic board is installed in the front half (flight direction), and the battery-pack is installed in the rear half. The interface, on the front face of the housing includes:
- A remote control panel connector, to connect the remote control panel, programming and test equipment, an adapter cable and programming-dongle connector, and a maintenance-dongle, which has a maintenance identification data code programmed in its memory,
- Back up ANT and External ANT connectors to connect the antennae,
- A red indicator, to indicate a BITE test result or when ELT operates (TX LED),
- An ON/ARMED switch, to select desired mode.

REMOTE CONTROL PANEL (OPTIONAL)

The optional Remote Control Unit is installed on the cockpit overhead-panel.
The front panel of the remote control panel includes:
- An ARMED/OFF-SWITCH,
- TEST/RESET switch.
- An ON/TEST indicator.

G7508471 - G7OT0T0 - FM23DE00000003

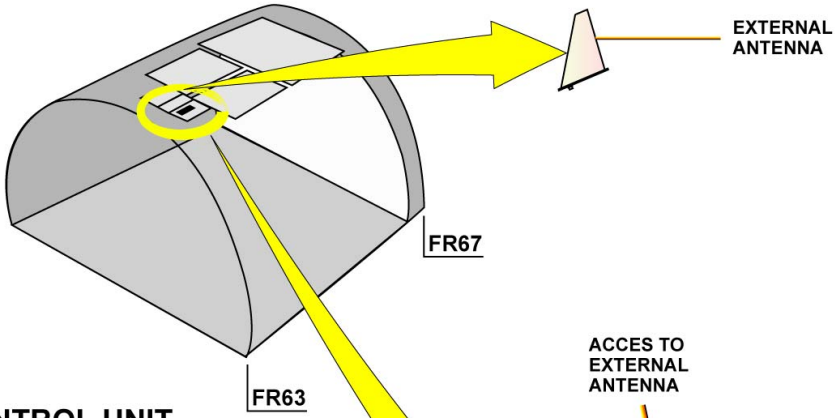

REMOTE CONTROL UNIT

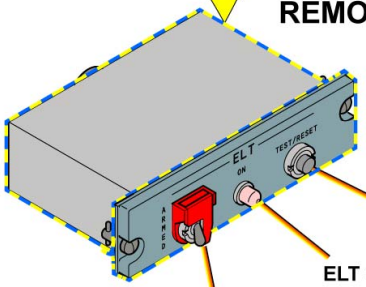

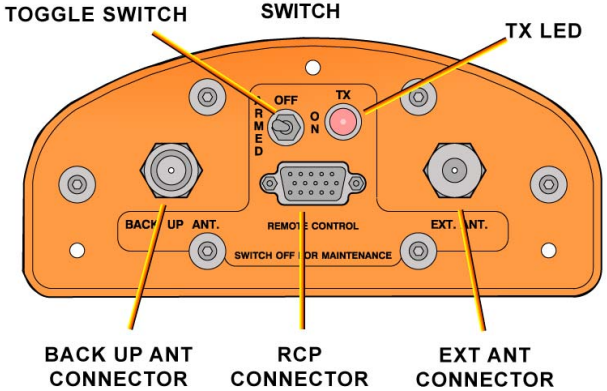

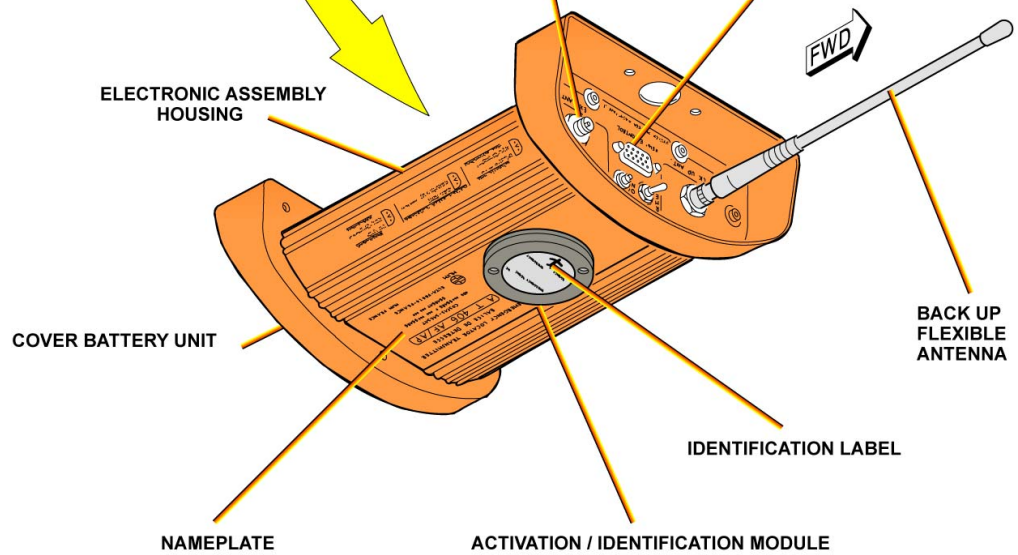

EMERGENCY LOCATOR

GENERAL & ELT DESCRIPTION

G7508471 - G7OT0T0 - FM23DE00000003

EMERGENCY LOCATOR TRANSMITTER SYSTEM D/O(ELTA) (3)

ELT OPERATION

EMERGENCY LOCATOR TRANSMITTER

The ELT can be operated in automatic or manual mode. When you use the ELT in portable mode it is operated manually, this is done by removing the antenna and connects it to the ANT connection on the ELT. The ON/OFF/ARM switch, located on the front face of the ELT has three functions:
- the ARM position for automatic operation of the ELT. An automatic operation is triggered when the ELT is connected to its system in the A/C, and the G-switch detects an impact sufficient to start the transmission,
- the OFF position, when the ELT is connected to its system in the A/C and requires maintenance, and when the ELT is disconnected from its system and removed from the A/C, or to stop the transmission,
- set to the ON position for manual operation of the ELT. A manual operation occurs when the ELT is connected to its system in the A/C and the G-switch is not triggered, but a signal must be transmitted (aircraft out of operation, injured passengers/crew members), when the ELT is connected to its system in the A/C and you do a self-test (BITE). An accidental operation occurs when the ELT is connected to its system in the A/C, and the G-switch can automatically starts transmission without a real emergency (ie hard landing).

REMOTE CONTROL PANEL (OPTIONAL)

The optional remote control panel controls and indication are as follows:
The ON-ARMED switch with switch guard is set to the ARMED position for automatic operation of the ELT. The switch is kept in the ARMED position by a stop, which is part of the switch assembly. The ON-ARMED switch is set to the ON position for manual operation of the ELT. You must pull the switch to clear the stop, and then set it to the ON position. The TEST/RESET push button is set to the TEST/RESET position to stop accidental operation, or to do a BITE test. The ON/TEST indicator comes on when the ELT operates, or to indicate the BITE test result. When the ELT operates the ON/TEST indicator:
- flashes two times per second during military and civil transmission,
- and, one long flash during satellite transmission.

BITE TEST

This BITE test can be done by means of the ELT or the remote control panel. On the front face of the ELT, the BITE test is done by setting the ON/OFF/ARM switch to the ARM position, or on the remote control panel, by setting the TEST/RESET P/B to TEST/RESET position, then the following actions occur:
- the red indicator flashes one time, then comes on, and the buzzer operates, on the ELT,
- the ON/TEST indicator flashes one time, then comes on, on the remote control panel (Option),
- the ELT indicator comes on, on the external power panel (Option),,
- the mechanic call-horn operates in the nose-landing-gear well (Option),.

G7508471 - G7OT0T0 - FM23DE00000003

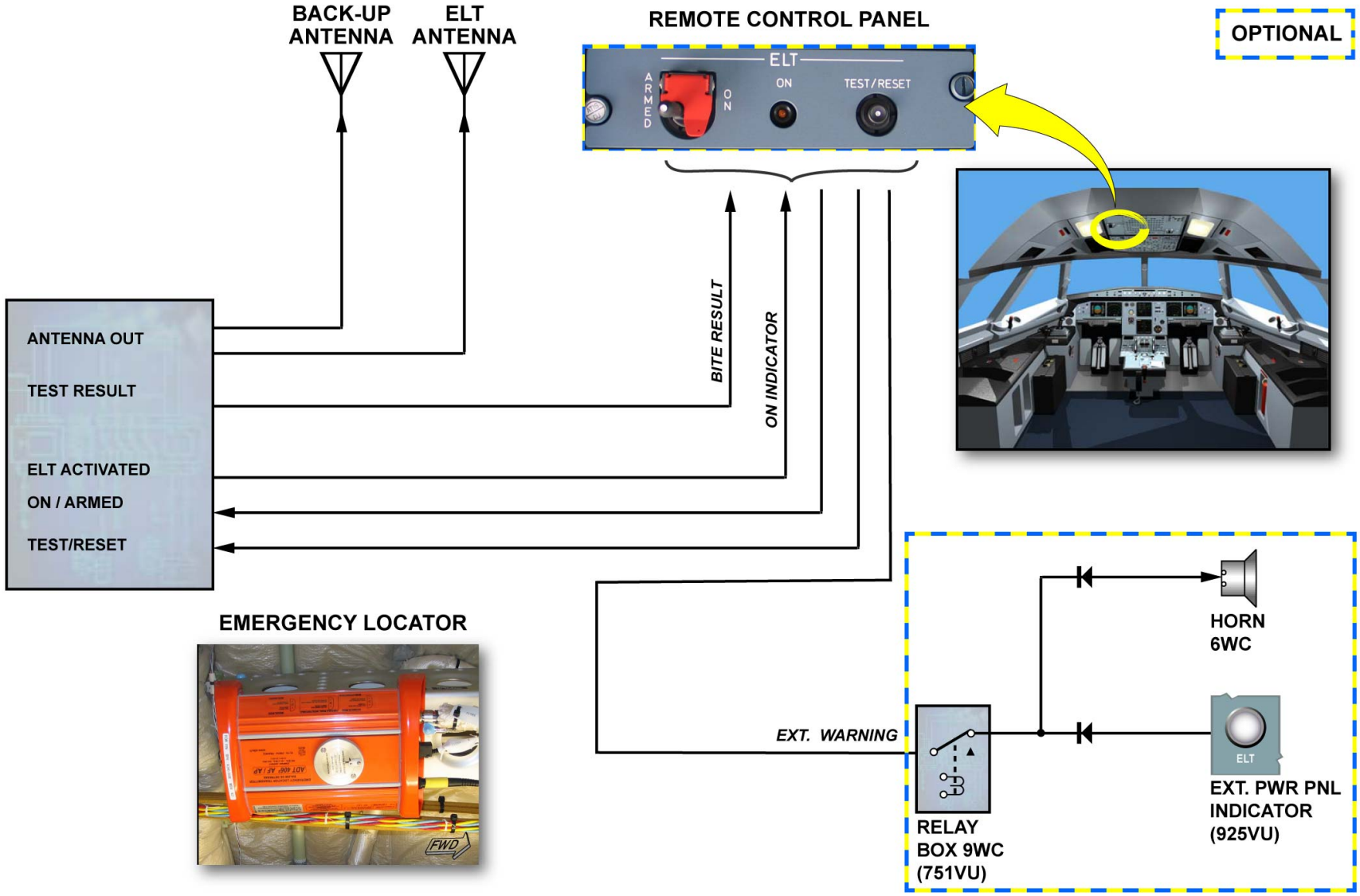

ELT OPERATION & BITE TEST

IFE SYSTEM GENERAL DESCRIPTION (3)

IN-FLIGHT ENTERTAINMENT

The main system controller, which is the core unit of the system and acts as the major interface between other head equipment items and the cabin network.
The purser control, located in the Video Control Center (VCC), which is the only human machine interface, to control and monitor the operation of the entire In-Flight Entertainment (IFE) system. A second purser control can be installed in the aft galley area: It has the same functions as the one in the VCC.
The broadcast audio/video units, which are used mainly for Passenger Address (PA) issues, as well as for safety demonstrations through video display. These units can be used as a backup in the case of major IFE software failure.
The IFE computers, which are used for data source and storage of the audio and video on demand, storage of the IFE operating software and BITE.
The cabin network is dependant to the A/C cabin definition. This network is used to direct requests from passengers to the IFE system head-end computers, and to relay data to be routed to the passenger environment.
The CIDS is connected to the IFE system via the DIRECTORS and the main system controller.

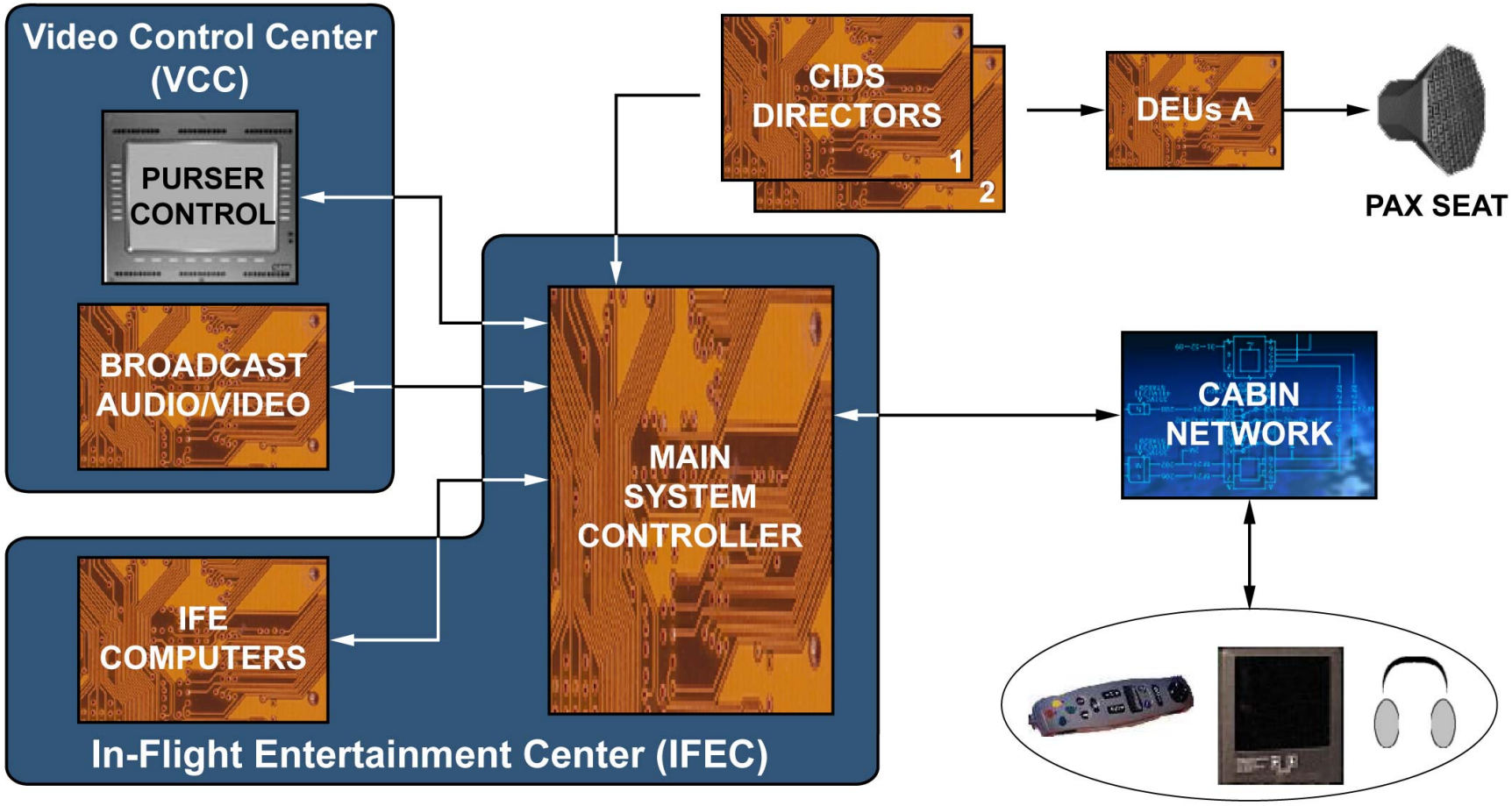

CIDS: Cabin Intercommunication Data System
DEU: Decoder/Encoder Unit
IFE: In-Flight Entertainment

IN-FLIGHT ENTERTAINMENT

IFE SYSTEM GENERAL DESCRIPTION (3)

CIDS DIRECTORS

The CIDS directors are connected to IFE system via the main system controller. The main reasons are:
-During passenger announcement from the cabin or the cockpit, the main system controller will ensure proper audio transmission to each seat (headset).
-For audio or video broadcasts which originate from the VCC (i.e. safety demonstration video) or the In-Flight Entertainment Center (IFEC) (i.e. boarding music): the main system controller relays the message to the Cabin Intercommunication Data System (CIDS) for audio broadcast through the loudspeakers in the entire cabin or a specific cabin zone.
-During the use of controls at the seat level, individual passenger services orders will be relayed to the CIDS for appropriate action (i.e. attendant call, reading light activation).
Various A/C systems are connected to the main system controller to ensure operation in normal and abnormal situations (i.e. Landing Gear Control and Interface Unit (LGCIU) for ground or flight operating mode).

G7508471 - G7OT0T0 - FM23P600000001

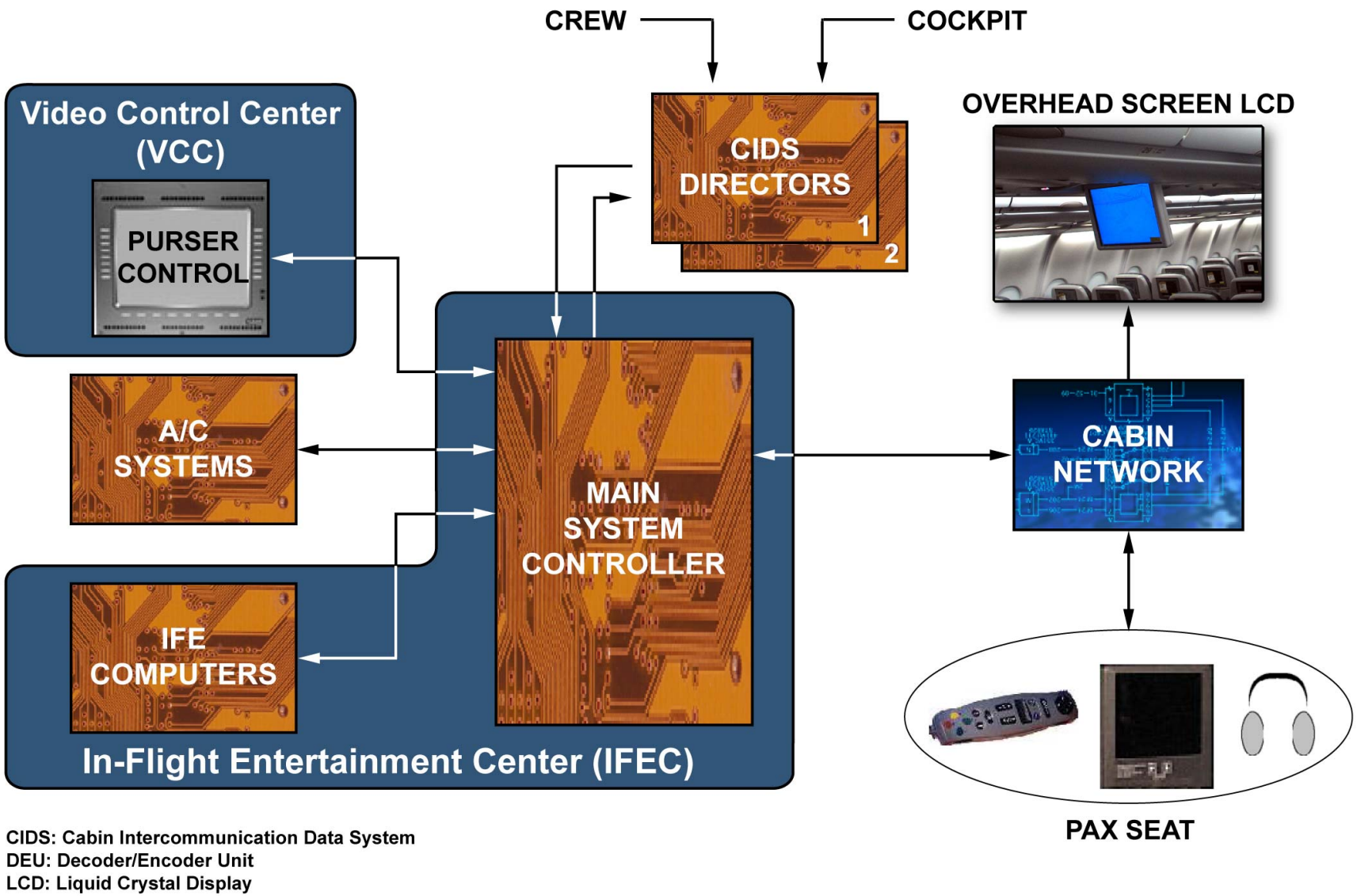

CIDS DIRECTORS

G7508471 - G7OT0T0 - FM23P600000001

IFE SYSTEM GENERAL DESCRIPTION (3)

PATS

The Passenger Air to ground Telephone System (PATS) is connected to the IFE system. It mainly exchanges voice and data with the main system controller and the SATCOM system. When air to ground communication is initialized, the main system controller ensures correct data exchange between the passenger seat (cabin network side) and the PATS.
The Cabin Telecommunication Unit (CTU) guarantees a correct formatting and data transmission/ reception package, as well as seamless voice communication. To achieve this transmission, only the SATCOM system is used. When data is transmitted from an A/C operating center, it is routed by the CTU to a printer, usually located in the VCC. The CTU has 30 channels fitted with a modem. It can process 29 simultaneous cabin communications (passenger side voice and/or data and one fax line from the telefax installed in the VCC).

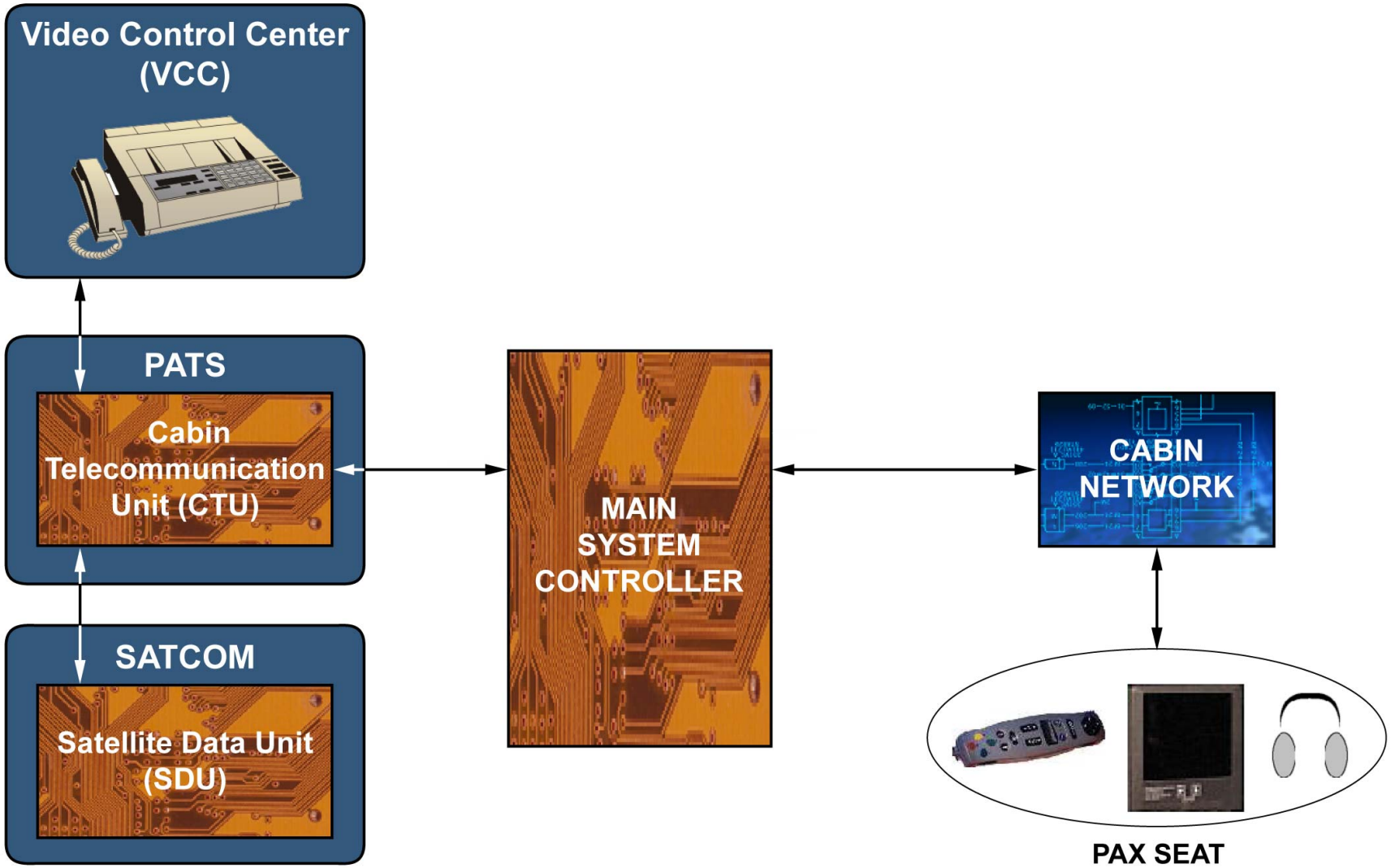

PATS: Passenger Air-to-ground Telephone System
SATCOM: Satellite Communication

PATS

G7508471 - G7OT0T0 - FM23P600000001

IFE SYSTEM FUNCTIONALITIES D/O (PANASONIC) (3)

INTRODUCTION

The In-Flight Entertainment (IFE) system is an interactive, fully integrated passenger entertainment system. The IFE system offers the passengers the following services:
- "Classic" audio and video broadcast programs,
- safety and information announcements in conjunction with the Passenger Address (PA) system,
- interactive utilities such as video games, internet features, and more,
- Audio and Video On Demand (AVOD),
- reading and attendant call lights control in conjunction with the Passenger Service System (PSS),
- updated flight and destination information displays in conjunction with the Passenger Flight Information System (PFIS),
- video images of the NLG and MLG in conjunction with the Taxiing Aid Camera System (TACS) and the landscape camera,
- telephone capability in conjunction with the Passenger Air-to-ground Telephone System (PATS).

G7508471 - G7OT0T0 - FM23D900000002

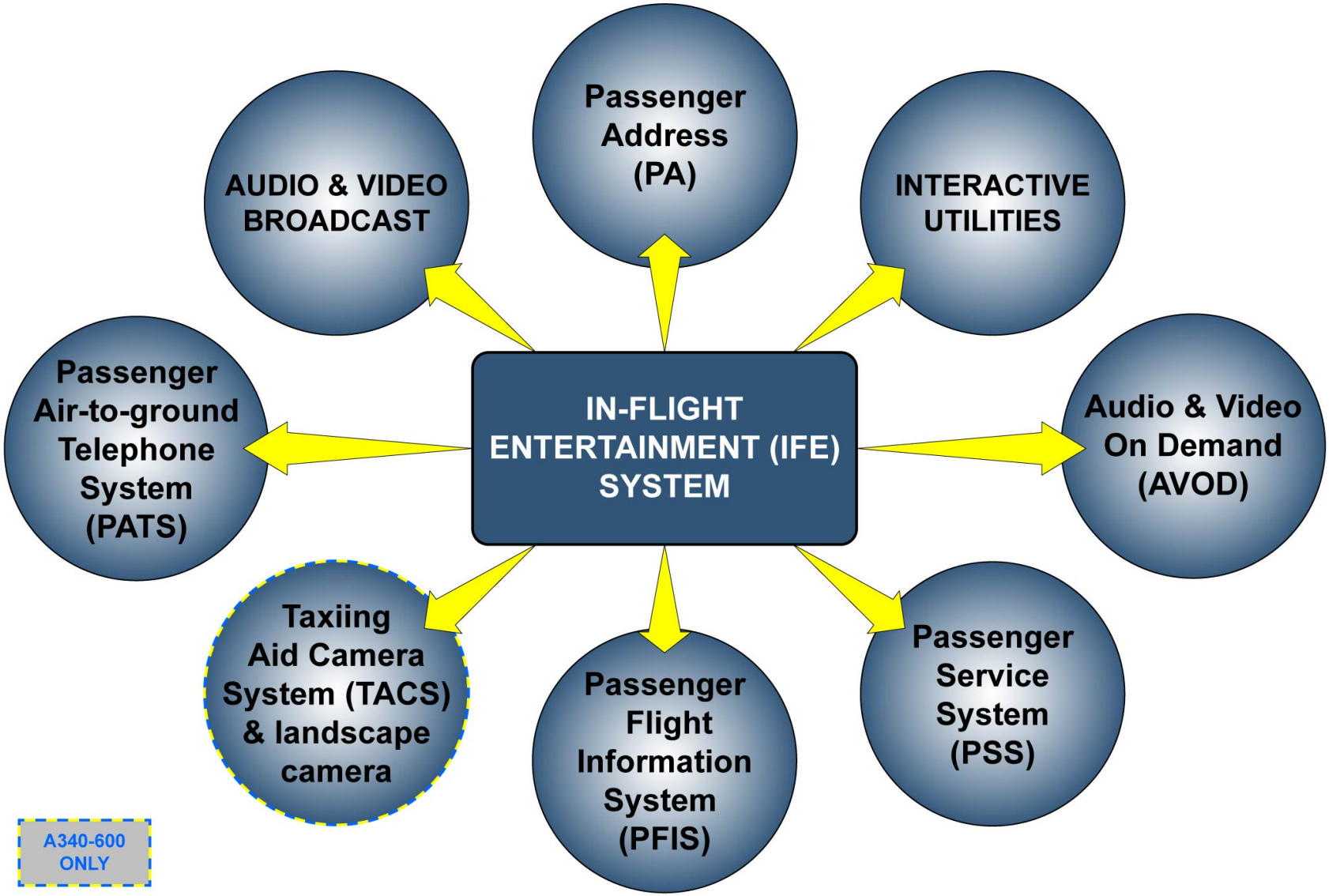

INTRODUCTION

G7508471 - G7OT0T0 - FM23D900000002

IFE SYSTEM FUNCTIONALITIES D/O (PANASONIC) (3)

GENERAL

The IFE system has three main parts:
- the In-Flight Entertainment Center (IFEC) located in the avionics bay,
- the Video Control Center (VCC) located in the cabin,
- the distribution network also located in the cabin.

The IFEC integrates a limited quantity of IFE Line Replaceable Units (LRUs). Most of the computers are installed in the avionics compartment, in dedicated racks. The core of the IFEC is the Enhanced Passenger Entertainment System Controller (EPESC). The EPESC is the major interface between the IFE components. It also interfaces with all other A/C systems needed for IFE services. It is connected to the Central Maintenance Computers (CMCs) for IFE BITE analysis, fault monitoring and troubleshooting functions.

The Cabin Management Terminal (CMT), located on the VCC, is the IFE Human-Machine Interface (HMI) system. The IFE system configuration and control are done with the purser control of the CMT.

The distribution network provides data to the overhead or wall-mounted displays. There can be independent viewing zones. The selection of monitors to the A/C viewing zone is programmable from the purser control. The distribution network makes sure that the data is delivered to the in-seat equipment.

Each passenger has a headset and an individual video screen. Passengers interact with the IFE system using the Passenger Control Unit (PCU) or the tactile video screen.

The PCU is not only a simple remote control for IFE selection. It also controls the reading lights and the attendant call lights. The Cabin Intercommunication Data System (CIDS) DIRectors (DIRs) ensure the function called Passenger Services System (PSS). The IFE system only sends the PCU order, via the EPESC, to the CIDS. The PCU also integrates a credit card reader, a dedicated keyboard, a microphone and a loudspeaker for PATS capability.

G7508471 - G7OT0T0 - FM23D900000002

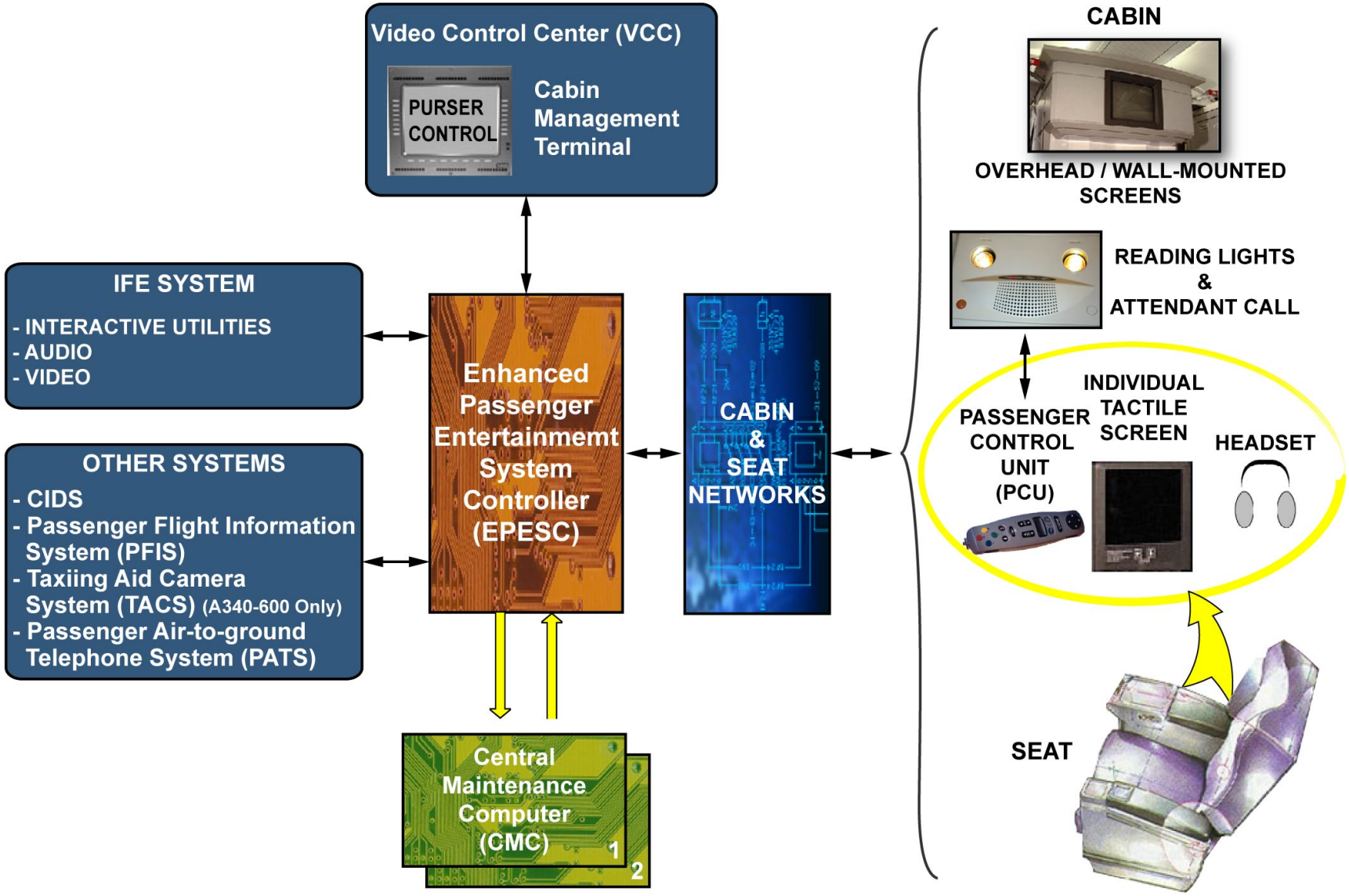
Video Control Center (VCC)
PURSER CONTROL
Cabin Management Terminal
IFE SYSTEM
- INTERACTIVE UTILITIES
- AUDIO
- VIDEO
OTHER SYSTEMS
- CIDS
- Passenger Flight Information System (PFIS)
- Taxiing Aid Camera System (TACS) (A340-600 Only)
- Passenger Air-to-ground Telephone System (PATS)
Enhanced Passenger Entertainmemt System Controller (EPESC)
CABIN & SEAT NETWORKS
Central Maintenance Computer (CMC)
1
2
CABIN
OVERHEAD / WALL-MOUNTED SCREENS
READING LIGHTS & ATTENDANT CALL
PASSENGER CONTROL UNIT (PCU)
INDIVIDUAL TACTILE SCREEN
HEADSET
SEAT

GENERAL

IFE SYSTEM FUNCTIONALITIES D/O (PANASONIC) (3)

OVERVIEW

The IFE system is a complex system, which is capable of many functions through many components. This is achieved through an internal communication network that links the IFE system LRUs. This network is a Local Area Network (LAN) called a "token ring". A specific component, a LAN hub, is required for the management of the token ring LANs. The LAN hub unit regulates the speed of the token and monitors its behavior within the ring.
The token ring mainly supplies the system with control data (orders). Orders either come from the VCC (e.g. IFE system setup) or from the passenger seats (e.g. AVOD). Requested data will be forwarded to the relevant end-users without transiting through the LAN hub. Data as video is directly sent by Quadrature Amplitude Modulation (QAM) Modulator Unit (QMU) to cabin enhanced Area Distribution Boxes (ADBs).

NOTE: Any exchange (orders and data requests) with the interactive unit will be done through the token ring (e.g. Individual screen main menu).

The IFE system is capable of various services. Data to end-users also come from components external to the IFE system (PFIS, TACS, etc). In this case, the EPESC controls and monitors the data flow. The EPESC is used as a bridge for transmission of control data to the cabin and seat networks.

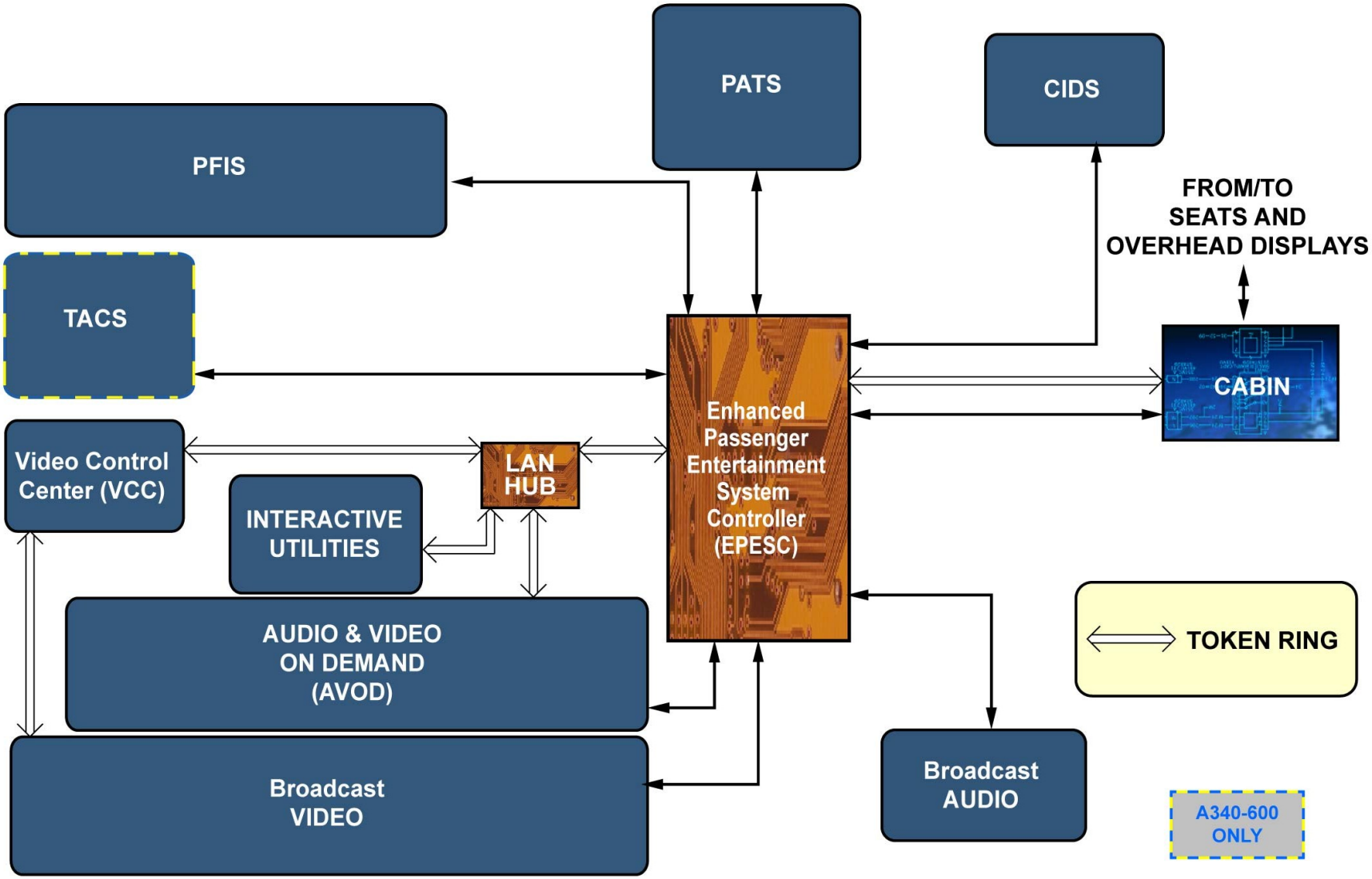
PATS
CIDS
PFIS
FROM/TO
SEATS AND
OVERHEAD DISPLAYS
TACS
CABIN
Enhanced
Passenger
Entertainment
System
Controller
(EPESC)
Video Control
Center (VCC)
LAN
HUB
INTERACTIVE
UTILITIES
AUDIO & VIDEO
ON DEMAND
(AVOD)
TOKEN RING
Broadcast
VIDEO
Broadcast
AUDIO
A340-600
ONLY

OVERVIEW

IFE SYSTEM FUNCTIONALITIES D/O (PANASONIC) (3)

TOKEN RING NETWORK

A token ring LAN is a circle network (ring) that links several components or stations. To get a data transmission cycle complete, the token runs three rounds on the ring. There is always one token circulating on the ring. The LAN HUB controls particularly its speed and its integrity.
The "want-to-talk" station traps the free token, attaches its message (frame) and releases the token on the ring. The frame contains the destination station address, the transmitter address and the data message.
The token runs from one station to another until it reaches the destination station. Each intermediate station acquires and repeats the token with respect to the ring rotation.
When the destination station receives the token, it copies the frame, acknowledges the receipt and releases the token on the ring.
The token, with its frame, carries on its way on the ring without changing its pace or course. When the transmitter station receives an acknowledged token, it stops the token, deletes the frame and releases the free token on the ring.

G7508471 - G7OT0T0 - FM23D900000002

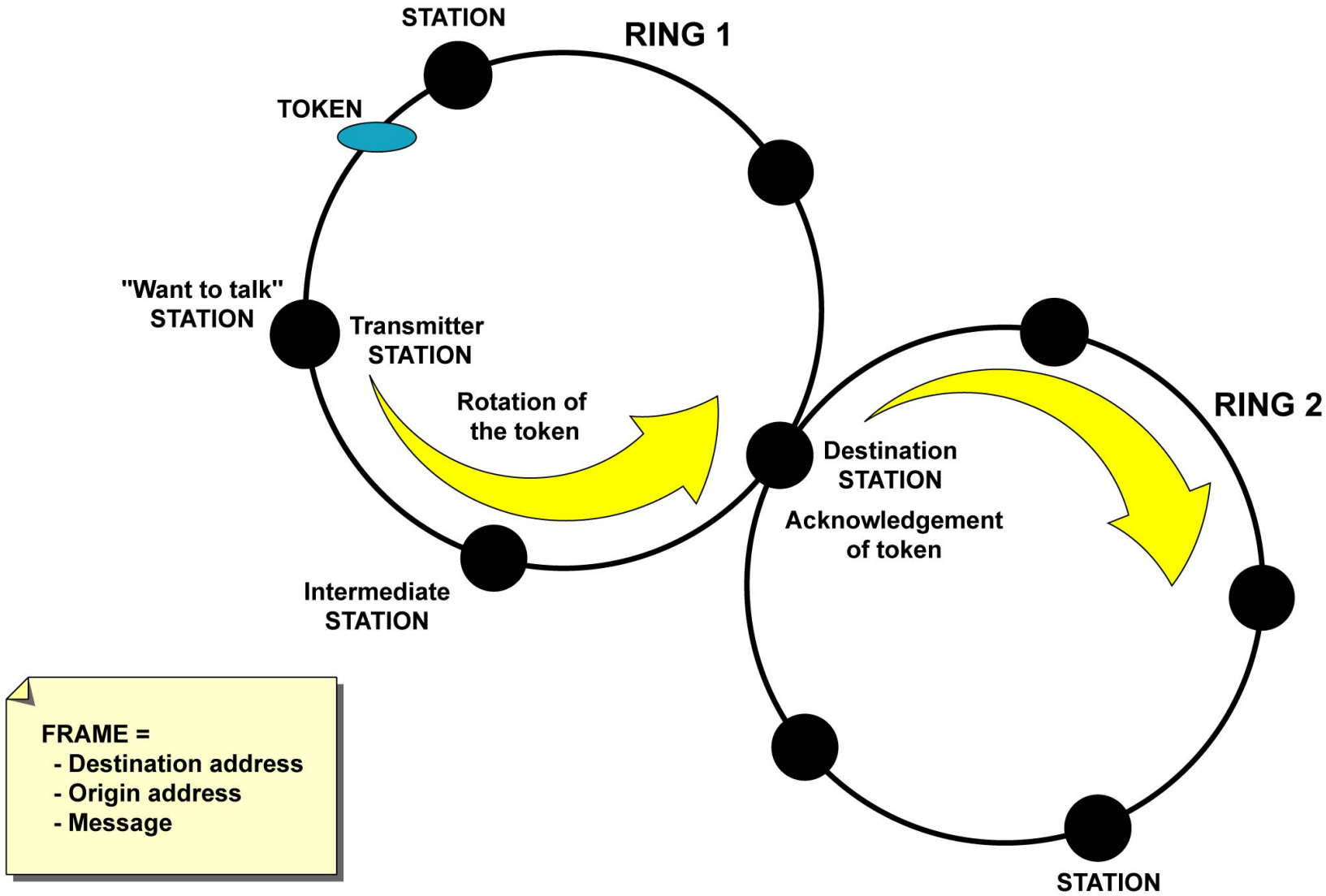

TOKEN RING NETWORK

G7508471 - G7OT0T0 - FM23D900000002

IFE SYSTEM FUNCTIONALITIES D/O (PANASONIC) (3)

IFE SYSTEM TOKEN RING LANs

The IFE system uses three token ring LANs:
- the core token ring LAN,
- the cabin token ring LAN,
- and a seat token ring LAN.

The core LAN links the IFE system LRUs, the LAN hub, the CMT and the EPESC together. All the elements are located in the EE-Bay or in the VCC. The LAN hub is a distribution device. It supplies a central connection point for core LAN. It also shows on its front face the electrical connection status of the connected LRUs. The EPESC relays the token ring to the cabin LAN.
The cabin LAN is composed of 11 video on demand enhanced ADBs.

NOTE: The number of video on demand enhanced ADBs may differ according to your A/C type and configuration.

Each video on demand enhanced ADB relays the token ring to the seat LAN.
The seat LAN is mainly composed of several Digital Seat Electronic Boxes (DSEBs) and enhanced ADBs. Each DSEB can interface with two or three seats. The DSEBs, when powered, store the part of IFE software allocated to the cabin seat it is attached to. It also contains the main menu specific to the cabin seat, as well as some basic commercial video and audio. These items are stored in the RAM and will be deleted when the DSEB is de-energized.

NOTE: The CMT is also connected to a dedicated DSEB. This enables the crew to preview IFE services from the CMT.

G7508471 - G7OT0T0 - FM23D900000002

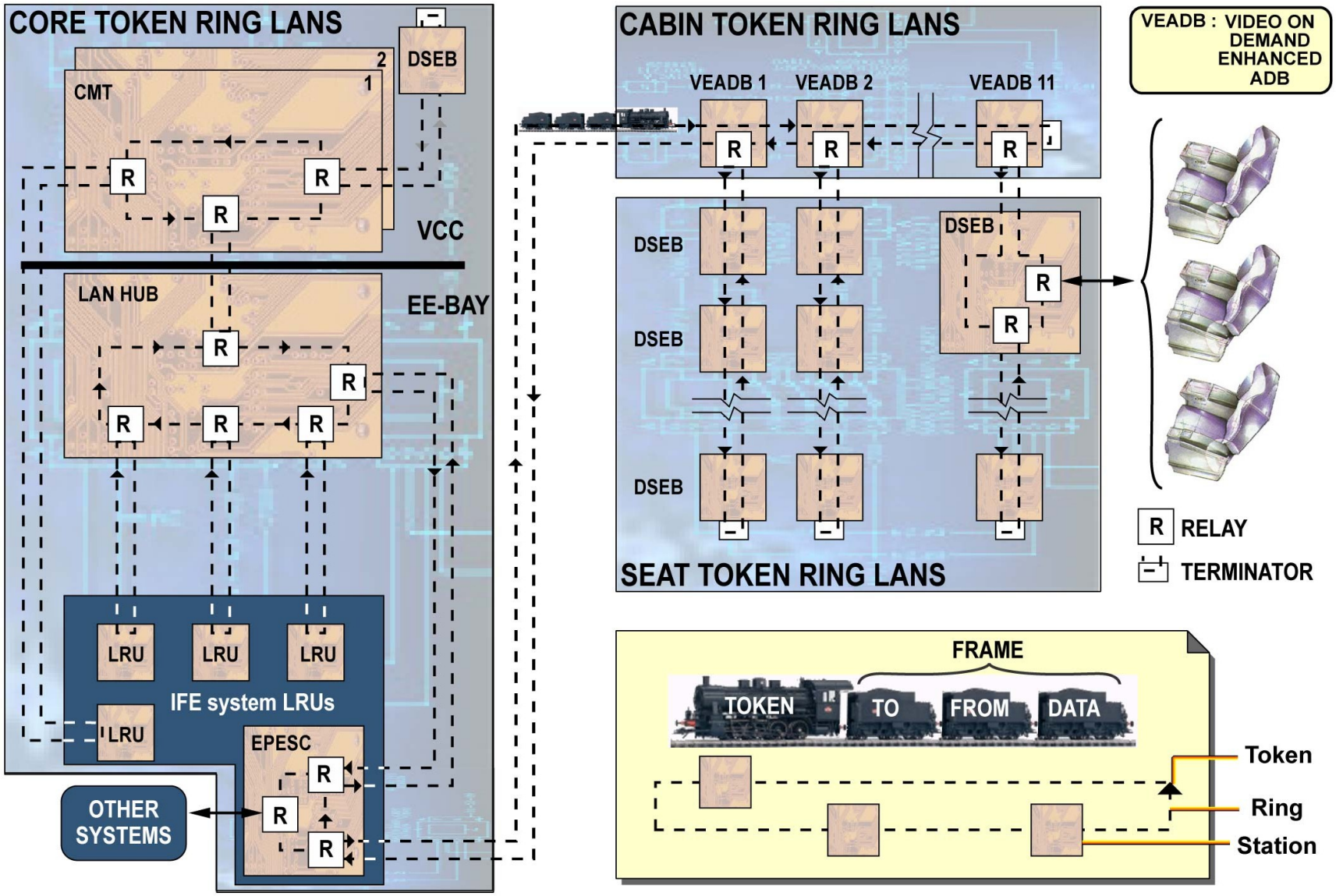

IFE SYSTEM TOKEN RING LANS

G7508471 - G7OT0T0 - FM23D900000002

IFE SYSTEM FUNCTIONALITIES D/O (PANASONIC) (3)

INTERACTIVE UTILITIES

The IFE system is capable of interactive utilities. This means that the IFE system gives to the passengers personal application data (software). The major component is the Cabin passenger management system Memory Expansion Unit (CMEU).
The CMEU is similar to a server. The CMEU contains all the IFE software that can be used by the passengers in the cabin and seat networks (through the EPESC) and enhanced ADBs respectively. The CMEU will supply the software according to a given sequence at the end of its power-up.
The main items of software that are proposed are:
- an interactive menu displayed on the individual screen at IFE system power-up,
- video games,
- internet applications (shopping, electronic libraries,...).

DESCRIPTION

The IFE system has two CMEUs. If one CMEU fails, the system is still operative but will be slower. Software can be downloaded into the CMEUs:
- from the Hard Disk Drive Arrays (HDDAs), located in the IFEC, via the token ring LANs,
- or directly from an external floppy disk, high speed data loader or CD-ROM.

The CMEU has a Built-In Test Equipment (BITE).
The HDDA stores MPEG data consisting of digital audio, video and audio-video program files for distribution.
The FCH does the HDDA file transfer, but also command transfer from QMU to HDDA and BITE initialization. It also does the readiness of Audio and Video On Demand for distribution in case of HDDA failure.
The QMU is a controller/processor transmitting a large number of digital media channels within a limited bandwidth and a single coax cable (RF carrier). It also is used for the broadcast of Audio and Video On Demand to passengers. It commands the BITE process of all HDDA and does the monitoring.

OPERATION

The interactive software is uploaded from the CMEU internal memory (Hard Drive Disk) to the Digital Seat Electronic Boxes (DSEBs) during system initialization. The CMEU controls the software status of the IFE LRUs on boot-up. When necessary, the CMEU uploads updated software to the reporting LRUs.
At power-up, software uploading (main and interactive menus as well as configuration files) is done zone by zone. The uploading is done from the front of the A/C to the rear. The total uploading time is around 10 minutes. It could differ according to the A/C configuration and the IFE system configuration. The DSEB sends token ring commands through EADBs, BITE status reports and telephone voice data.
The DSEBs act as the Random Access Memory (RAM) of a personal computer. They enable the playing and the displaying of software on the individual video screens. The DSEB supplies video, audio and power to the PSS elements, as well as commands signals and data.
The CMEU also uploads software on passenger request. The passenger request is received by the DSEB, converted into a token and sent to the CMEU.
The CMEU processes the request and uploads the requested software to the relevant seat. The software is sent to the appropriate DSEB using the token ring LANs. The data is uploaded in 2 KB packets.
Upon completion of software uploading from CMEU, some Audio and Video On Demand filer can be automatically called for storage in the DSEB RAM. This is ensured by data file transfer via the EPESC and the token rings.

G7508471 - G7OT0T0 - FM23D900000002

QAM: Quadrature Amplitude Modulation
FCH: Fiber Channel Hub
CMEU: Cabin Memory Expansion Unit
DSEB: Digital Seat Electronic Box

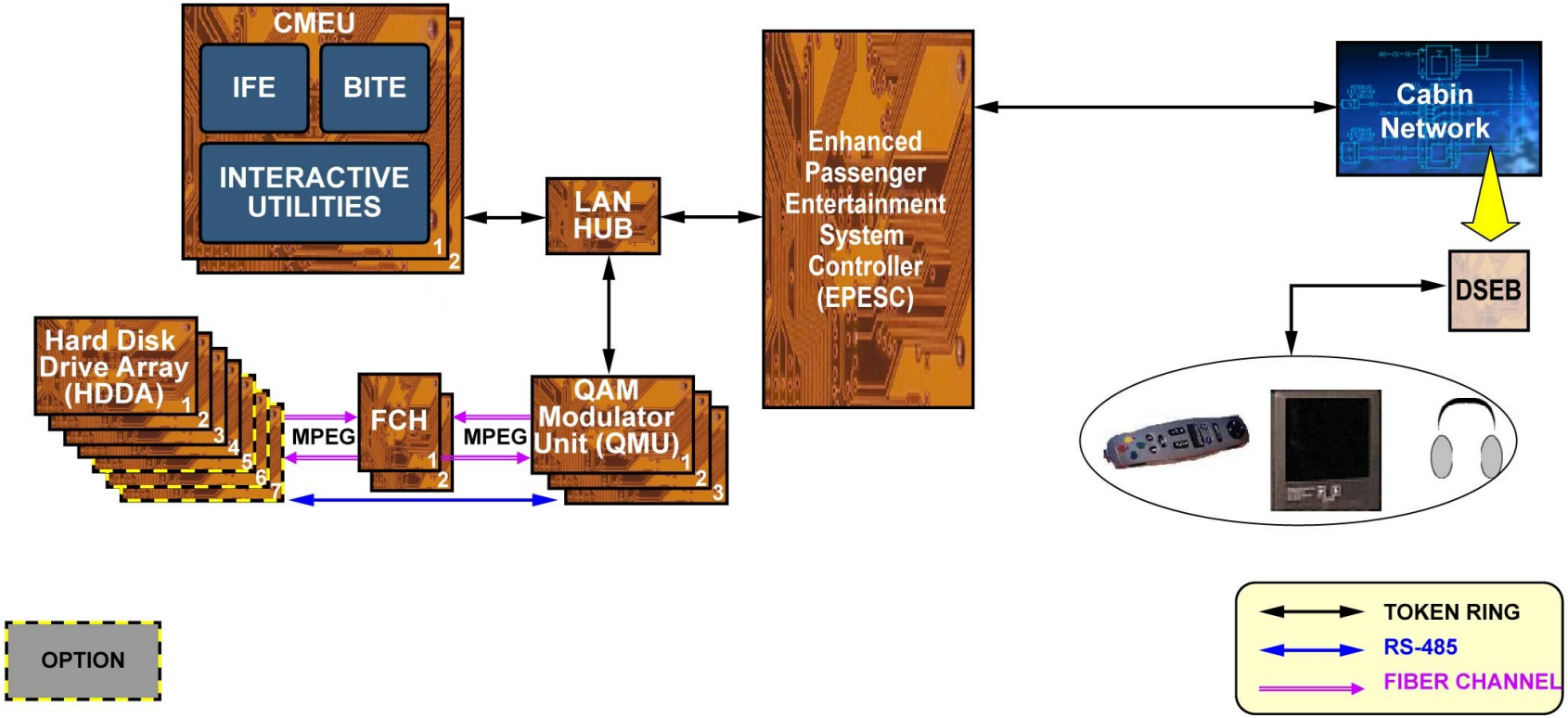

INTERACTIVE UTILITIES - DESCRIPTION & OPERATION

IFE SYSTEM FUNCTIONALITIES D/O (PANASONIC) (3)

AUDIO FEATURES

There are three operating audio modes:
- audio from broadcast programs,
- Audio On Demand (AOD),
- audio from the PA system.

AUDIO BROADCAST

Audio sources are either "classic" Audio Reproducers (A/Rs) like a compact disc reader, or digital audio data (MPEG files).

NOTE: MPEG stands for Motion Picture Experts Group.

The A/Rs can be located either in the IFEC or in the VCC. Their number and location differ according to the A/C configuration. The audio program is mainly broadcasted from A/Rs. In this case, the analog audio signal is directly sent from the A/Rs to the EPESC. The EPESC processes the signal and sends it to a Radio Frequency Combiner Splitter (RFCS). The main role of a RFCS is to combine several types of signals into a single signal held on a single carrier and vice versa. The RFCS is a passive device consisting of a constant impedance transformer. The RFCS sends the signal to a Radio Frequency Distribution Amplifier (RFDA) that distributes the audio signal to the passengers through the cabin network.

MPEG audio files can also be used for broadcasting audio programs. The MPEG files are stored in several Hard Disk Drive Arrays (HDDAs). The MPEG files are sent to the Quadrature amplitude modulation Modulator Unit (QMU) through fiber channels. A Fiber Channel Hub (FCH) is required for interfacing the HDDAs with the QMUs. This fiber channel hub supplies an optical transfer path from HDDA to HDDA, permitting media loading transfer at High Speed (HS) (100MB/s). A Portable Data Loader (PDL) can be plugged into the FCH for MPEG file downloading.

The QMUs control the flow of data from the HDDAs. The QMUs convert the digital MPEG files into a specific analog Radio Frequency signal (RF QAM). This signal is then directly sent to the RFCSs for distribution to the cabin network.

NOTE: QAM stands for Quadrature Amplitude Modulation. Several sets of MPEG data can be modulated into a single RF QAM signal.

In addition, the QMUs transmitsa token to inform the cabin network on how to demodulate the required signal and how to demultiplex the proper MPEG block from the whole RF stream. The broadcast programs can be controlled from the VCC and sent to the cabin loudspeakers through the CIDS DIRs, for Passenger Address (PA) purpose.

NOTE: The HDDAs, the QMUs and the FCHs are located in the IFEC in the EE-Bay.

AUDIO ON DEMAND

Each passenger can choose, from a pre-determined menu, a selection of audio programs. The selection is made from the seat using the PCU or the tactile screen. The passenger selection is sent to the cabin network via the seat token ring LAN. The token then gets to the QMU. It acknowledges the receipt of the token and processes a request to the HDDAs.

The AOD sources are MPEG data files located in the HDDAs. The MPEG files are sent to the QMUs, converted into an analog RF QAM signal and distributed to the cabin network. The QMU also emits a token to inform the cabin network how to address the required audio signal to the required seat.

AUDIO FROM PASSENGER ADDRESS

PA messages broadcasted by the crew are sent to the cabin loudspeakers. The PA messages are also sent to the EPESC. The

G7508471 - G7OT0T0 - FM23D900000002

EPESC broadcasts the PA messages to the passengers headsets via the cabin network. As the PA has priority over the IFE system, all current IFE system services are frozen to allow PA messages to be heard.

G7508471 - G7OT0T0 - FM23D900000002

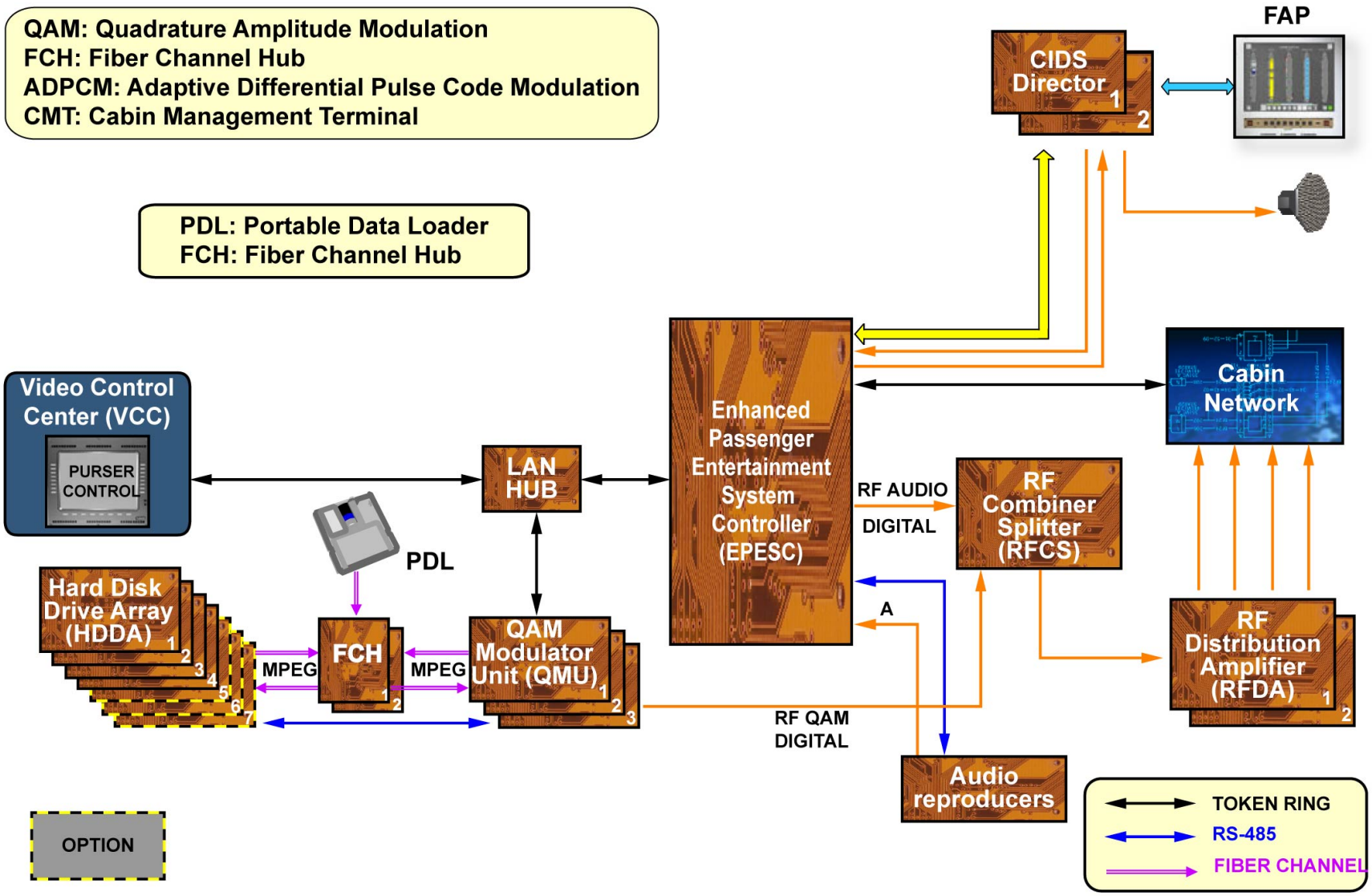

AUDIO FEATURES - AUDIO BROADCAST ... AUDIO FROM PASSENGER ADDRESS

G7508471 - G7OT0T0 - FM23D900000002

This Page Intentionally Left Blank

G7508471 - G7OT0T0 - FM23D900000002

IFE SYSTEM FUNCTIONALITIES D/O (PANASONIC) (3)

VIDEO FEATURES

There are three operating video modes:
- video from broadcast programs,
- Video On Demand (VOD),
- video for safety procedure demonstration.

VIDEO BROADCAST

Video sources may be "classic" Video Reproducers (V/Rs) like Digital Video Disk (DVD) or Video Cassette Recorder (VCR). Video sources are also digital video data (MPEG files). If the video broadcast sources come from the V/Rs, the information is split into two parts: the video itself and its associated audio. These two sets of data are broadcasted in two different ways. The V/Rs send the analog video to a Video Modulator Unit (VMU). The VMU converts the video signal into a Radio Frequency Video signal (RF video). The VMU sends the signal to an RFCS.
At the same time, the V/Rs send the analog audio signal to the Enhanced Video Control System Unit (EVSCU). The EVSCU converts the audio signal into a 4-bit digital signal. This kind of signal is called ADPCM for Adaptive Differential Pulse Code Modulation. This signal is then routed to the RFCS, which also receives the associated video signal.
The RFCS combines the two signals into a single RF Video/ADPCM signal and sends it to the EPESC. The EPESC sends the signal to the cabin network for broadcasting at seat level and/or overhead display level. The associated audio can also be sent to the cabin loudspeakers through the CIDS directors. If the broadcast video sources come from MPEG files, operation is similar to the broadcast audio from V/R's.
The QMU sends a RF QAM signal to the cabin network directly.
The QMU transmits a token to inform the cabin network (enhanced ADBs and concerned DSEBs) on how to demodulate the proper RF and how to demultiplex the proper MPEG block from the MPEG transport stream. The broadcast program is normally selected from the VCC. The crew selection is sent to the EVSCU via a token ring. The EVSCU then relays the selection to the V/Rs.

VIDEO ON DEMAND

The VOD operation is similar to the AOD operation. Each passenger can choose, from a pre-determined menu, a selection of video programs. The selection is made from the seat using the PCU or the tactile screen. The passenger selection is sent to the cabin network, via the seat token ring LAN. The token arrives to the QMU. It acknowledges the receipt of the token and processes a request to the HDDAs.
The VOD sources are MPEG data files located in the HDDAs. The MPEG files are sent to the QMUs, converted into an analog signal and supplied to the cabin network. The QMU also emits a token to inform the cabin network on how to address the required video signal to the appropriate seat.

SAFETY DEMONSTRATION VIDEO

The cabin crew can also broadcast safety demonstration videos. The cabin crew controls the operation from the VCC. Usually safety demonstrations are recorded on "classic" V/Rs. They are broadcasted to the passengers as explained before. As with the PA announcements, the safety demonstrations have priority over the IFE system, all current IFE system services are cancelled during safety demonstrations.

G7508471 - G7OT0T0 - FM23D900000002

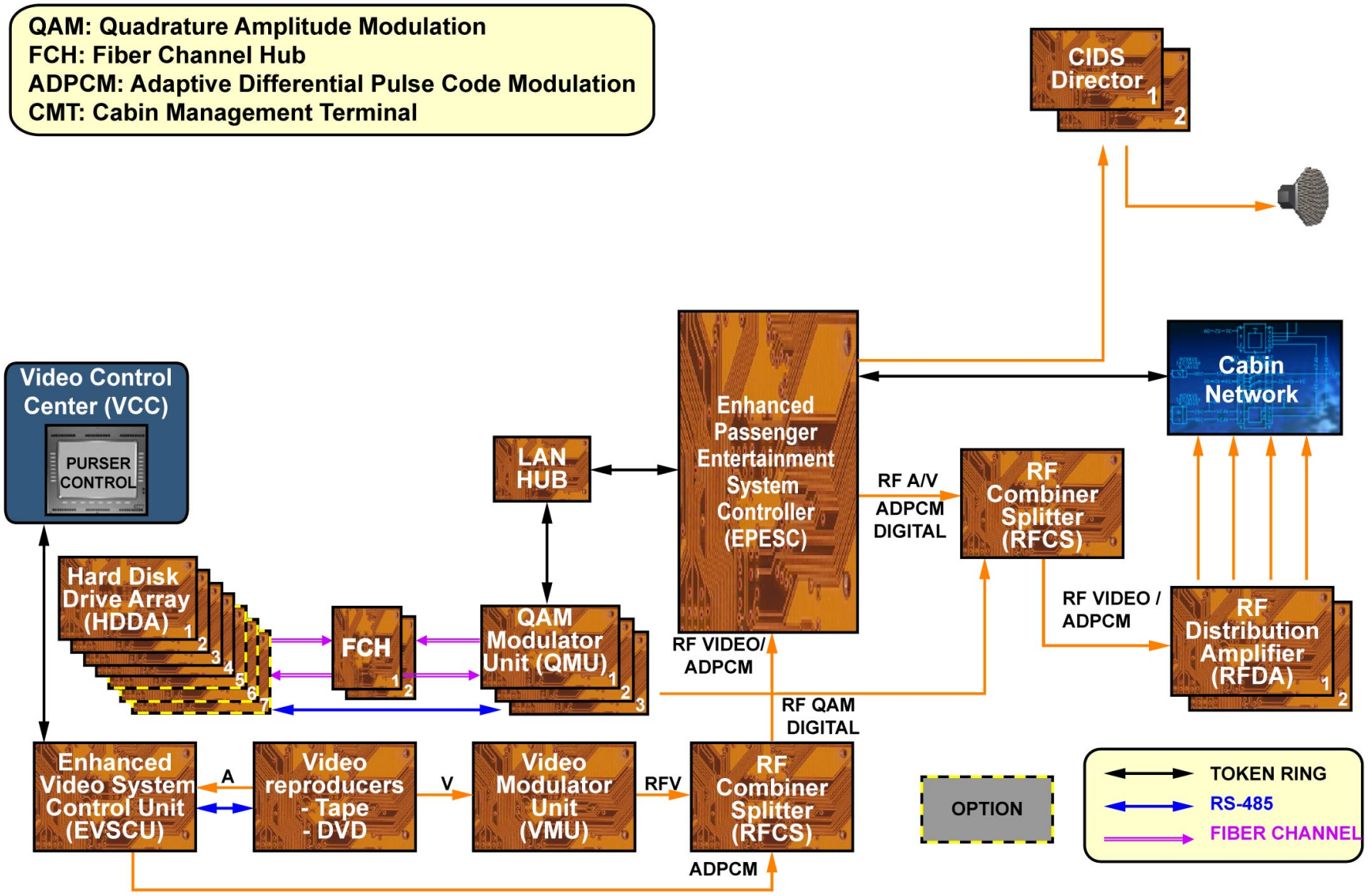

VIDEO FEATURES - VIDEO BROADCAST ... SAFETY DEMONSTRATION VIDEO

G7508471 - G7OT0T0 - FM23D900000002

IFE SYSTEM D/O (PANASONIC) (3)

SYSTEM INTERFACE

The In-Flight Entertainment (IFE) system also interfaces with the following A/C systems:
- Passenger Air-to-ground Telephone System (PATS),
- Passenger Flight Information System (PFIS),
- Taxi Aid Camera System (TACS) (A340-600 only).

PATS

The IFE system lets each passenger use individual telephones. The Passenger Control Unit (PCU) has a keyboard, a microphone and a loudspeaker like a conventional telephone handset.
The passenger telephone request is acquired by the Digital Seat Electronic Box (DSEB). The DSEB converts the request into a token and sends it to the Enhanced Passenger Entertainment System Controller (EPESC) via the cabin network.
The EPESC processes the request and sends it to the Cabin Telecommunications Unit (CTU).
A telephone communication is then opened using the SATCOM system of the A/C. The telephone signal between the EPESC, the CTU and the SATCOM is encoded into a specific digital signal.
The EPESC processes this signal and converts it into a token ring message. The communication is then relayed to the passengers via the token ring Local Area Networks (LANs).

PFIS

The PFIS continuously gives updated flight and destination information to the passengers.
The main components of the PFIS are the Random Access Device (RAD) and the Digital Interface Unit (DIU).
The DIU uses data from A/C systems to build the requested screens.
The RAD is a CD-based random access digital audio/video reproducer.
Depending on A/C position, the RAD will automatically provide video sequences to the passengers for example details on the country overflown, points of interest, or safety procedures.
The PFIS sends to the IFES video and audio data.
Audio data is directly sent to the EPESC. The EPESC processes the audio signal and sends it to the Radio Frequency Combiner Splitter (RFCS) for cabin network broadcasting.
The RAD sends the analog video to a Video Modulator Unit (VMU). The VMU converts the video signal into a Radio Frequency Video signal (RF video). The VMU sends the signal to a RFCS for cabin network broadcasting.
Data from the PFIS can be requested either by the crew from the Video Control Center (VCC), or by the passengers from the PCU or the tactile screen. In both cases, the EPESC acquires the request from the token ring LANs, and sends it to the DIU. Data from the PFIS can be broadcasted on the overhead displays or on the individual passenger screens.

TACS (A340-600 ONLY)

The IFES system enables an interface with the TACS. For taxiing purposes, the TACS enables the video images of the NLG and MLG to be displayed on the CAPT and F/O Primary Flight Displays (PFDs) and the ECAM SD.
The TACS uses a Camera Interface Unit (CIU) for the processing of video signal. Upon EPESC request, the CIU video signal is sent to the VMU.
The VMU converts the video signal into a Radio Frequency video signal (RF video). The VMU sends the signal to a RFCS for cabin network broadcasting.
Video from the TACS can be requested either by the cabin crew from the VCC, or by the passengers from the PCU or the tactile screen. In both cases, the EPESC acquires the request from the token ring LANs, and sends it to the CIU.

G7508471 - G7OT0T0 - FM23DD000000001

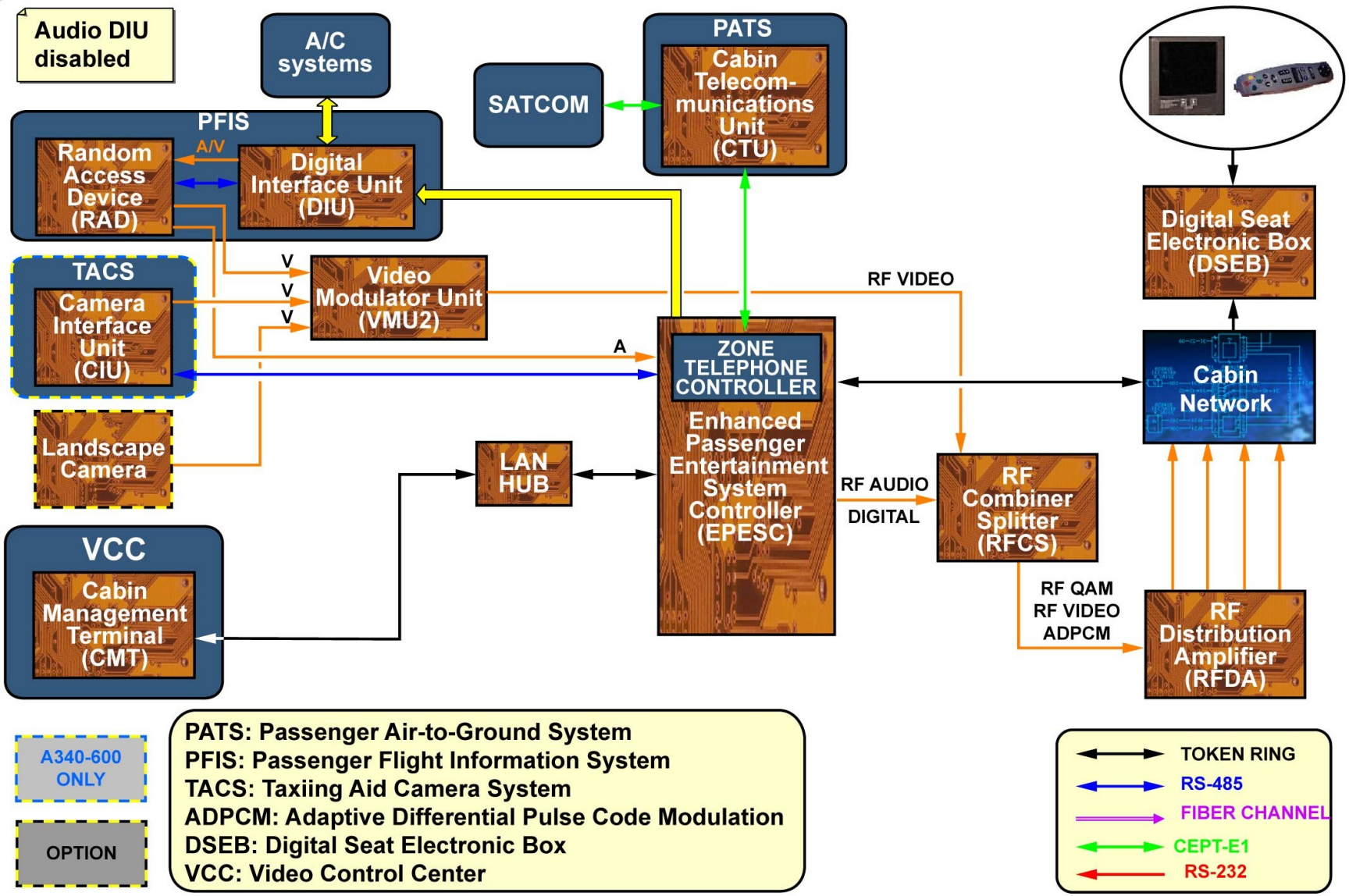

SYSTEM INTERFACE - PATS ... TACS (A340-600 ONLY)

G7508471 - G7OT0T0 - FM23DD000000001

IFE SYSTEM D/O (PANASONIC) (3)

PATS

The main component of the Passenger Air-to-Ground Telephone System (PATS) is the Telecommunications Unit (CTU). It is installed in the avionics compartment. It gives the cabin telephone and data transmission capabilities, and is responsible for the air to ground calls and fax.
The A/C can have different telecommunication systems:
- wall-mounted telephone, and in-seat telephone,
- digital printer / fax machine,- cordless telephone and Cabin Wire Less Unit (CWLU). The CWLU is part of "Fly Smart".
Communication is achieved, directly or via the IFE system, with the CTU, which transmits communications to the SATCOM.
The CTU receives voice data originating from the passenger telephone handsets and converted to CEPT.E1 protocol by the zone telephone controller found in the EPESC. It also receives voice data originating from the ground public telephone network through the SATCOM. The CTU concentrates voice data, credit card data and telephone number data from cabin seats as well as ground telephone voice data to transmit to the passenger handset. Failure of the zone telephone controller in the EPESC to translate token ring to CEPT.E1 will stop all telephone and fax communication.

NOTE: CEPT.E1 (Conference European Post and Telecommunications standard E1) is a digital telecommunications protocol.

G7508471 - G7OT0T0 - FM23DD000000001

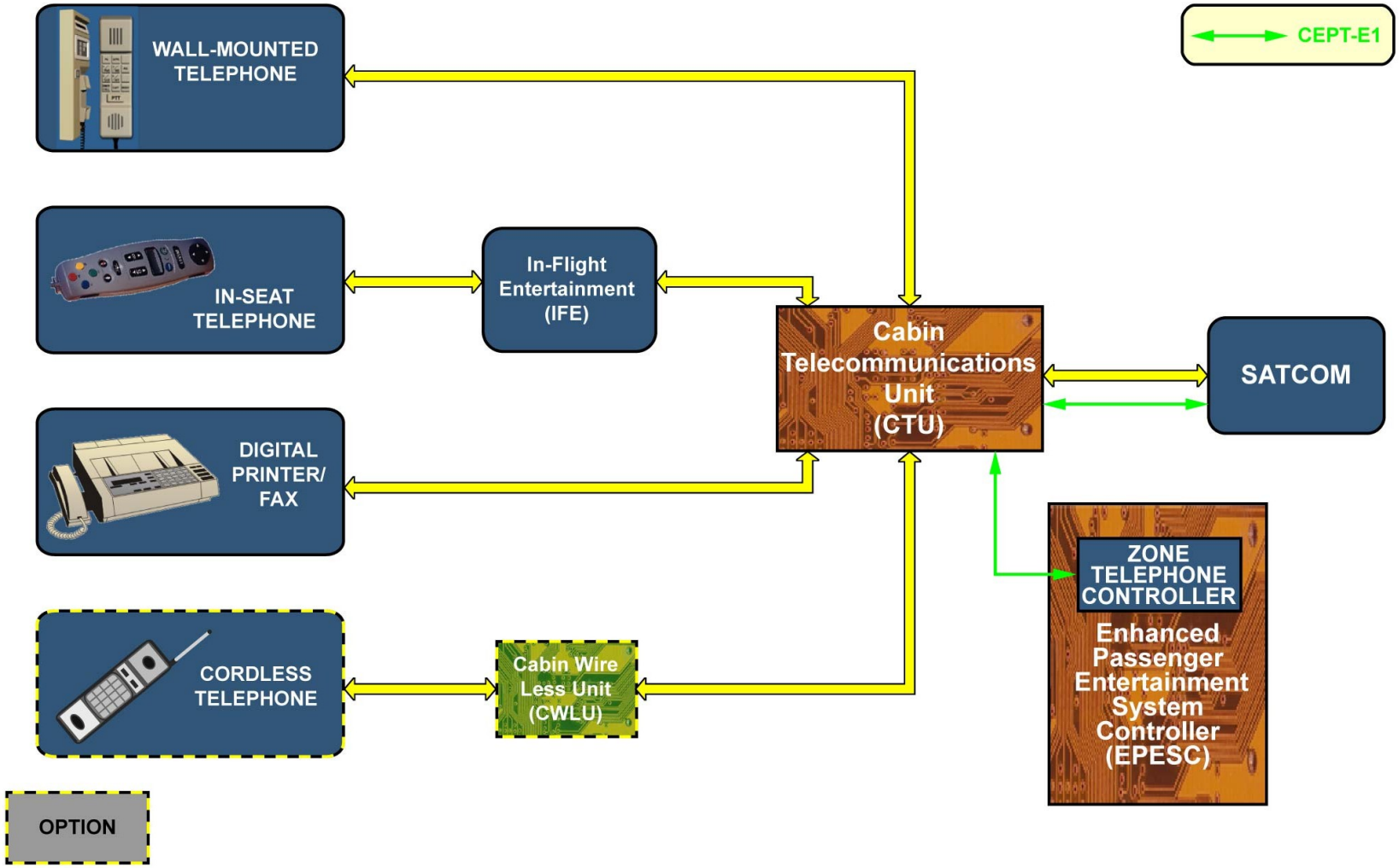

PATS

G7508471 - G7OT0T0 - FM23DD000000001

IFE SYSTEM D/O (PANASONIC) (3)

PATS (continued)

COMPONENT LOCATION

The component location of the PATS is described on A340-600, in this example. It is composed of a fixed handset and a telephone antenna (PANASONIC).

G7508471 - G7OT0T0 - FM23DD000000001

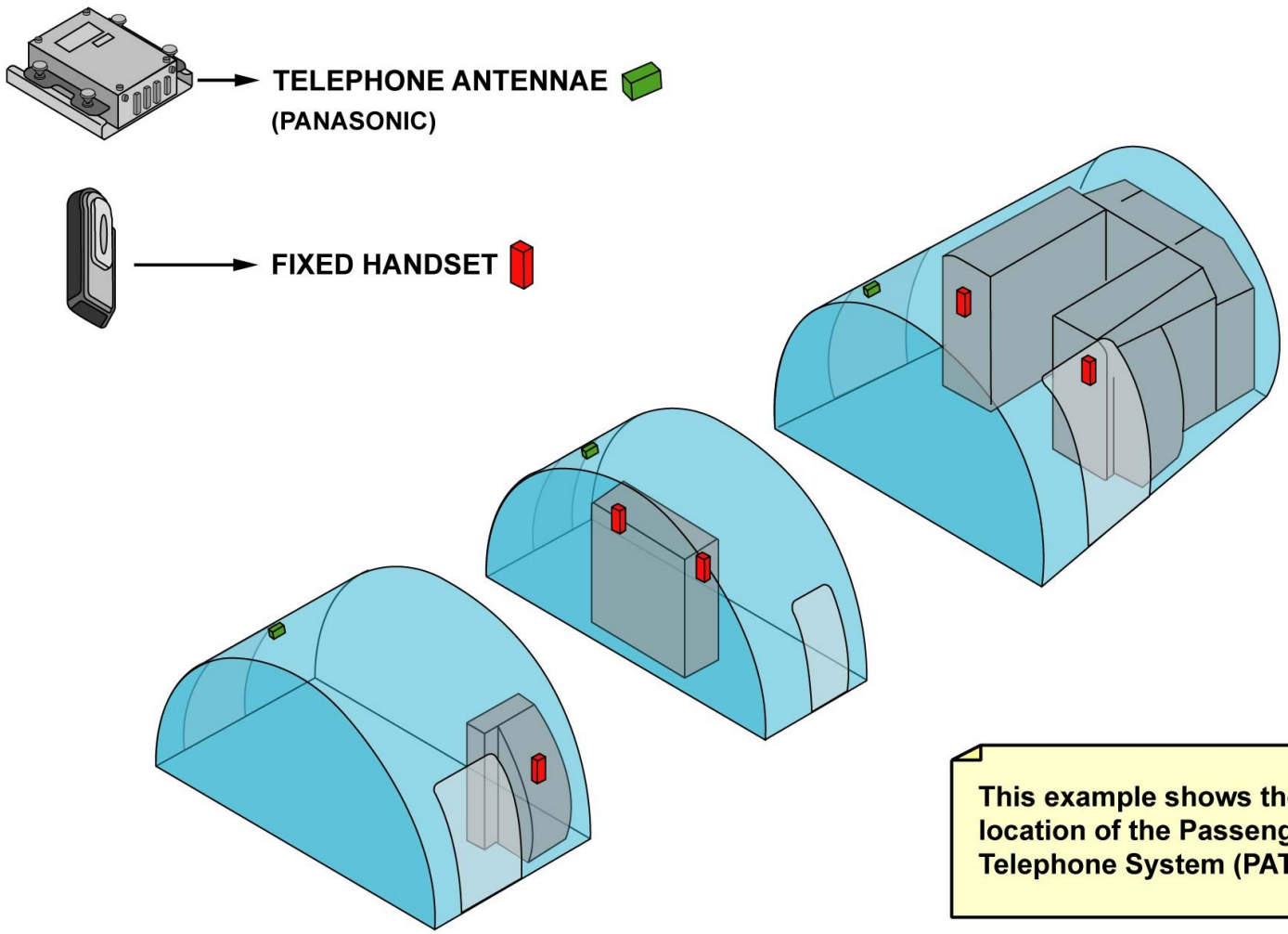

This example shows the component location of the Passenger Air-to-Ground Telephone System (PATS) on A340-600.

PATS - COMPONENT LOCATION

G7508471 - G7OT0T0 - FM23DD000000001

IFE SYSTEM D/O (PANASONIC) (3)

PATS (continued)

SYSTEM DESCRIPTION

To make an air-to-ground telephone call as easy as possible, the PATS is designed to operate like a public phone. In some features, the PATS is different from a public telephone (e.g insert credit card for payment) and the passenger gets additional information by messages through the handset display. Additional instructions are given to passenger on the display window of the telephone handset. The PATS has three independent systems, including several components:
- the cabin distribution system (fixed-wired telephone system),
- the SATCOM (bearer system),
- CTU (interface box).

G7508471 - G7OT0T0 - FM23DD000000001

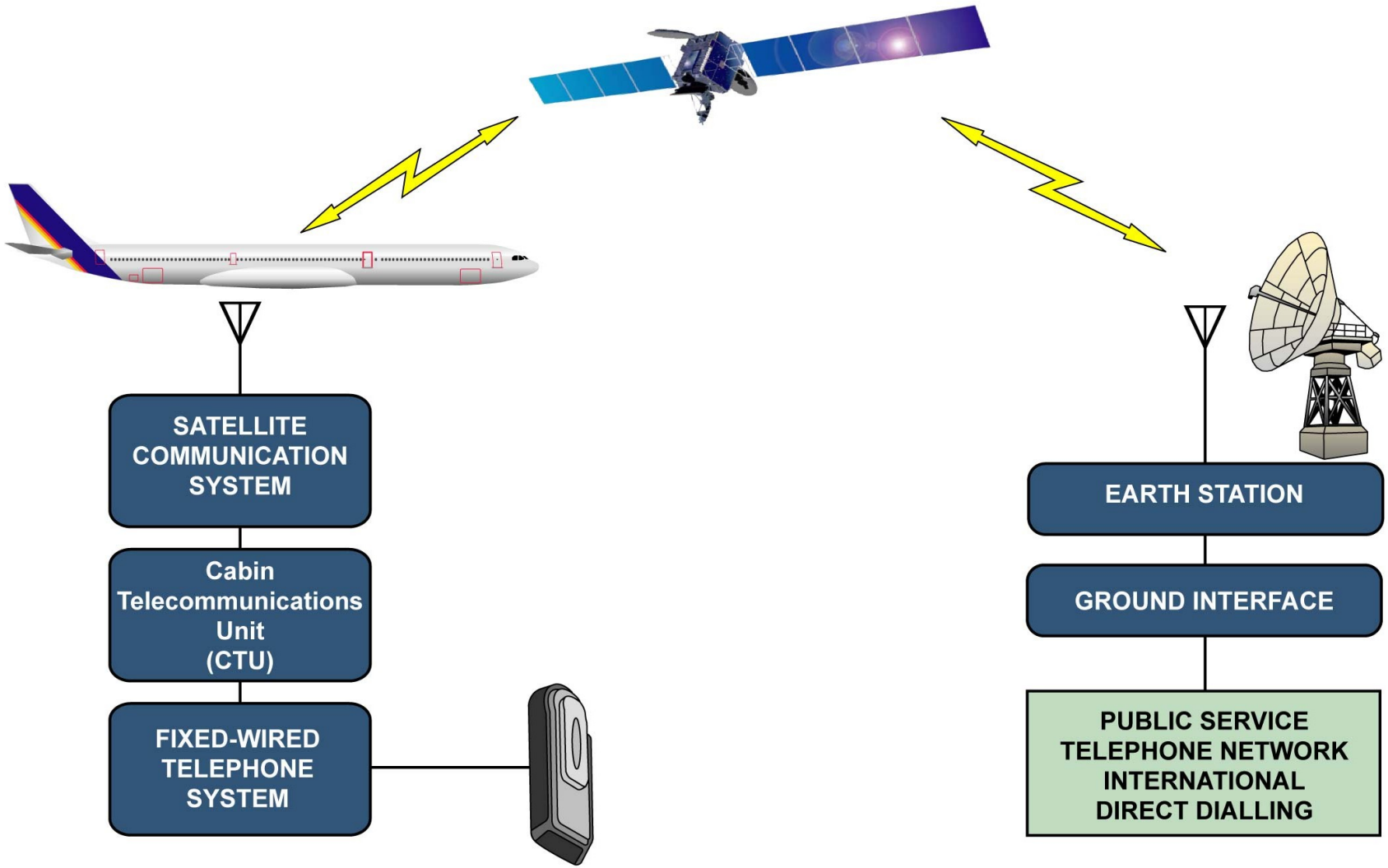

PATS - SYSTEM DESCRIPTION

G7508471 - G7OT0T0 - FM23DD000000001

IFE SYSTEM D/O (PANASONIC) (3)

CABIN AND SEAT NETWORKS

The IFE data is dispatched to the end-users via the cabin network and the seat network. The end users are either the overhead displays or the passenger seats (PCU, screen and headset).
Two sorts of data are dispatched to the cabin and seat networks. The first set of data comes from the EPESC through the token ring.
The second set of data comes from the two RFDAs through classic analog RF links.
The EPESC interfaces with the cabin token ring LAN. Each video on demand enhanced Area Distribution Box (ADB) sends the token ring from the EPESC to the seat token ring LAN via the Floor Distribution Boxes (FDBs).
The seat LAN is composed of several DSEBs. The number of video on demand enhanced ADBs, FDBs and DSEBs differs according to the A/C type and configuration. In any case, each DSEB is capable of interfacing with three seats. At each end of seat token ring, the last DSEB has a terminating resistor. The last enhanced ADB of the cabin token ring also has a simulator terminator to make sure that the proper token ring operates.
The two RFDAs send the RF audio/video signal to the cabin video on demand enhanced ADB network.
Only 4 videos on demand enhanced ADBs directly interface with the RFDAs. The signal is then transmitted from one interfacing video on demand enhanced ADBs to one or two other ones.
The RF audio/video signal is then repeated to the DSEBs (seat network) via the FDBs. The RF video signal is also repeated to several Tapping Units (TUs).
Each DSEB receives both the RF signal and the token ring signal. The DSEB demodulates and demultiplexes the proper block from the whole RF signal according to the key given by the token ring. The DSEB is then able to address the right IFE message at the right seat and at the right devices: PCU, screen or headsets. Moreover, the DSEB is also able to process the interactive software coming from the Cabin Passenger Management Memory Expansion Unit (CMEU) via the token ring.
Each TU supplies the overhead/wall-mounted displays with the video signal.

G7508471 - G7OT0T0 - FM23DD000000001

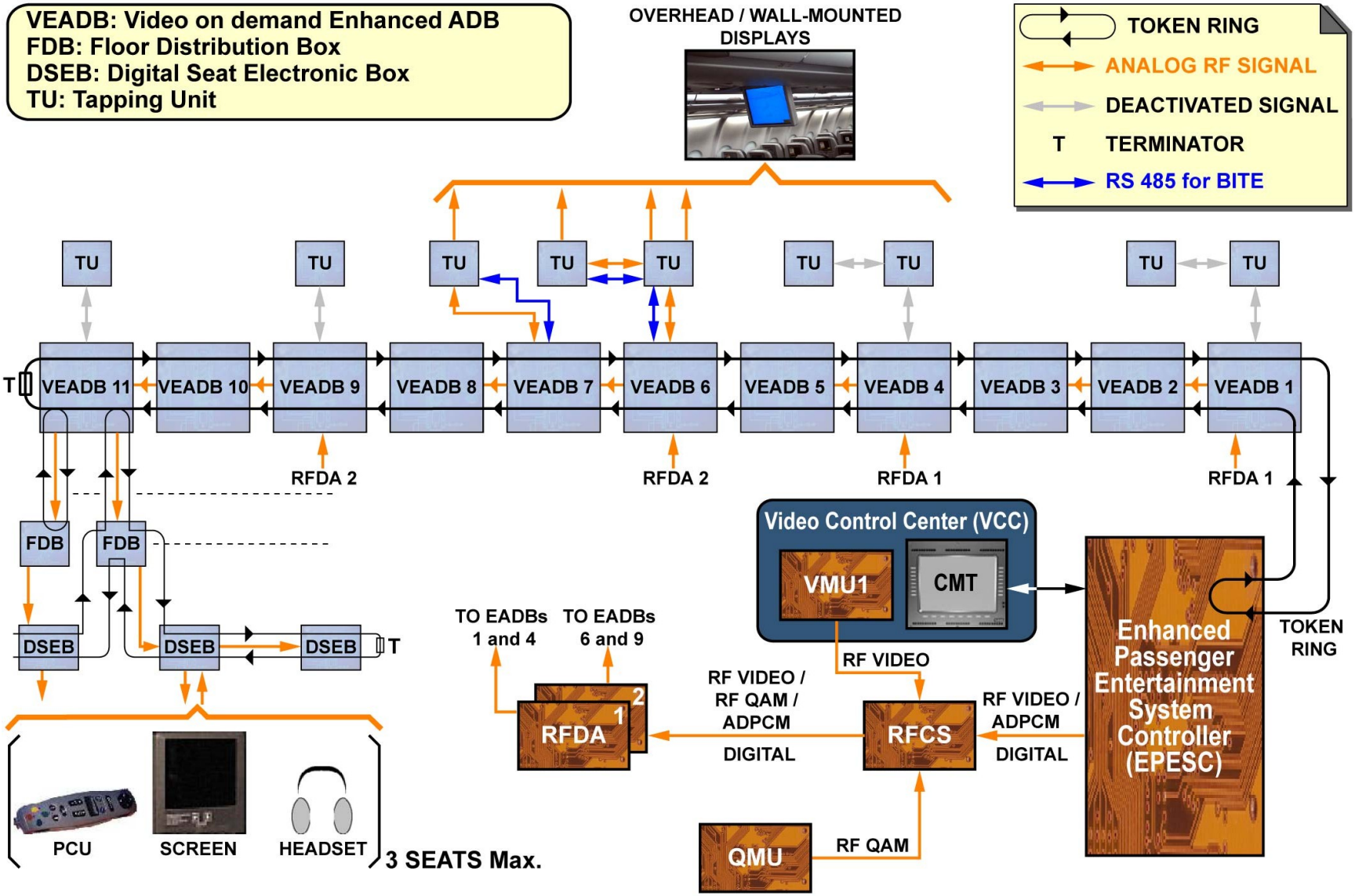

CABIN AND SEAT NETWORKS

G7508471 - G7OT0T0 - FM23DD000000001

IFE SYSTEM D/O (PANASONIC) (3)

POWER SUPPLY

The IFE system is supplied through the FWD and aft cabin C/B panels. Three PAX SYS ON/OFF switches located in the cockpit on the overhead panel, in the VCC and on the Flight Attendant Panel (FAP) are used to cut off the power supply to the IFES. To maintain passenger comfort, two additional P/Bs (IFEC SMOKE/OFF and VCC SMOKE/OFF) are installed to enable the crew to cut off electrical power of both IFE compartments in case of smoke detection and loss of ventilation, without the need to cut off the power supply to all passenger systems.
The Electrical Load Management Unit (ELMU) and the COMMERCIAL cockpit switch can also control the Remote Control Circuit Breakers (RCCBs) associated to the IFES.
The VCC is directly connected to the cabin C/B panels. It has a MAIN switch, which cuts off the supply of all the IFE associated systems.
The overhead network is supplied through the TUs and the video on demand enhanced ADBs.
The seat network is supplied through the Master Control Units (MCUs) and the Power Floor Disconnect Boxes (PFDBs). Moreover each seat has C/Bs.
The in-seat C/Bs increase the maintainability and make more flexibility in the IFES operation. Indeed, the Portable Electronic Devices (PEDs) power may be switched off, from the cockpit or the FAP, while maintaining other seat capabilities operative.
The cabin unit, CTU and each holster are supplied with 115VAC from the NORM BUS. The CTU supplies the seat telephone boxes through a fixed-wired telephone cable assembly with the A/C 115VAC power supply. The seat telephone boxes supply a 24VDC to their connected handsets.

G7508471 - G7OT0T0 - FM23DD000000001

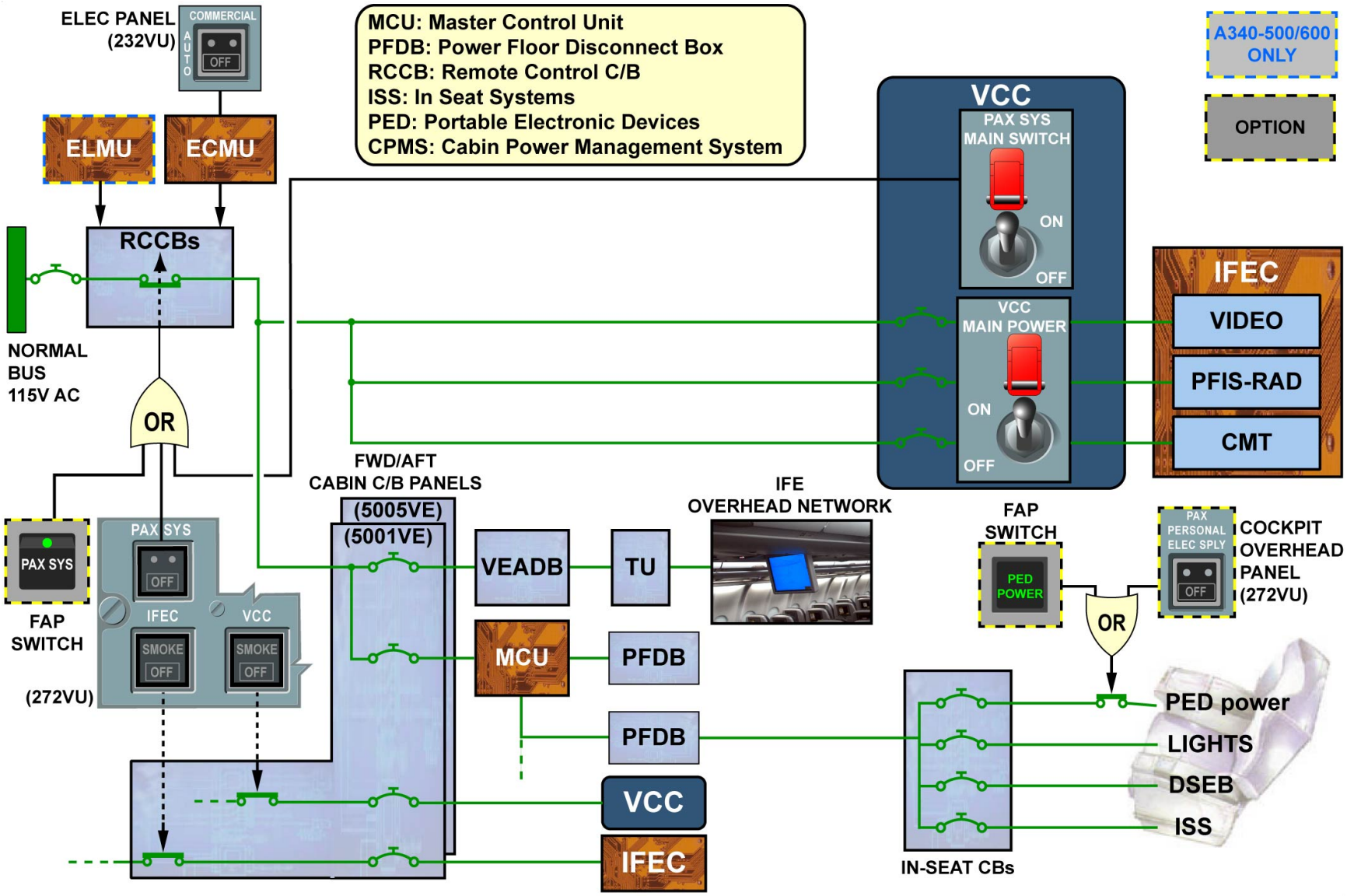

G7508471 - G7OT0T0 - FM23DD000000001

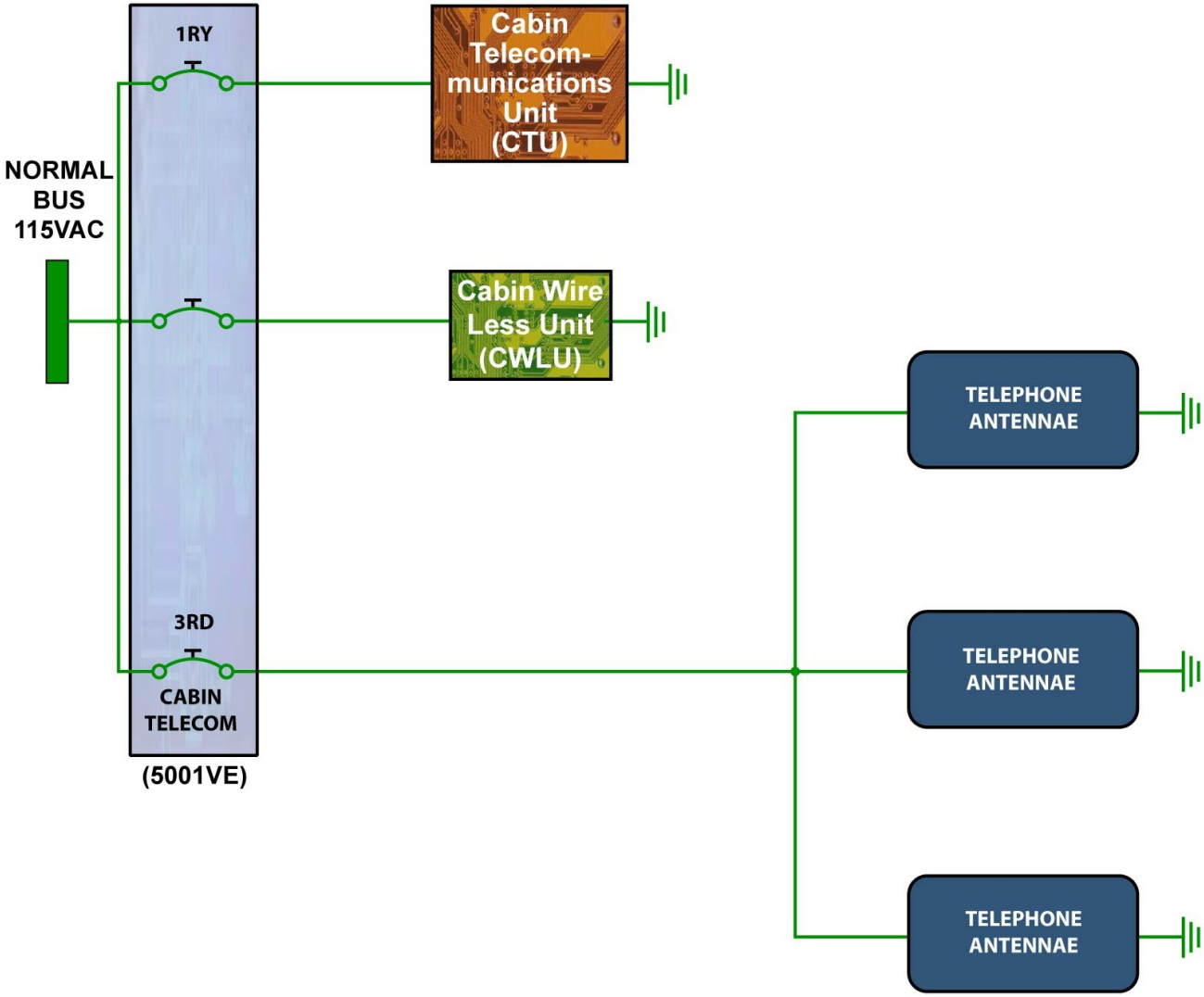

POWER SUPPLY

G7508471 - G7OT0T0 - FM23DD000000001

This Page Intentionally Left Blank

G7508471 - G7OT0T0 - FM23DD000000001

IFE SYSTEM D/O (PANASONIC) (3)

BITE

The EPESC centralizes all the BITE status of the IFES LRUs and interfaces with the Central Maintenance Computers (CMCs).
Specific interactive maintenance menus are directly accessible from the VCC using the Cabin Management Terminal (CMT).
The "PASSCODE maintenance crew" screen is displayed when the top left (L1) and the top right (R1) line select keys are pushed at the same time. The "PASSCODE cabin crew" screen is displayed when the bottom left (L8) and the bottom right (R8) line select keys are pushed at the same time.
In case of failure of the keyboard (QWERTY), it is possible to use the line and function select keys of the CMT as follows:
- the left line select keys agree with the first 8 letters of the keyboard's first line,
- the right line select keys agree with the first 8 letters of the keyboard's second line,
- the function select keys agree with the 7 letters and the following key of the keyboard's third line.

G7508471 - G7OT0T0 - FM23DD000000001

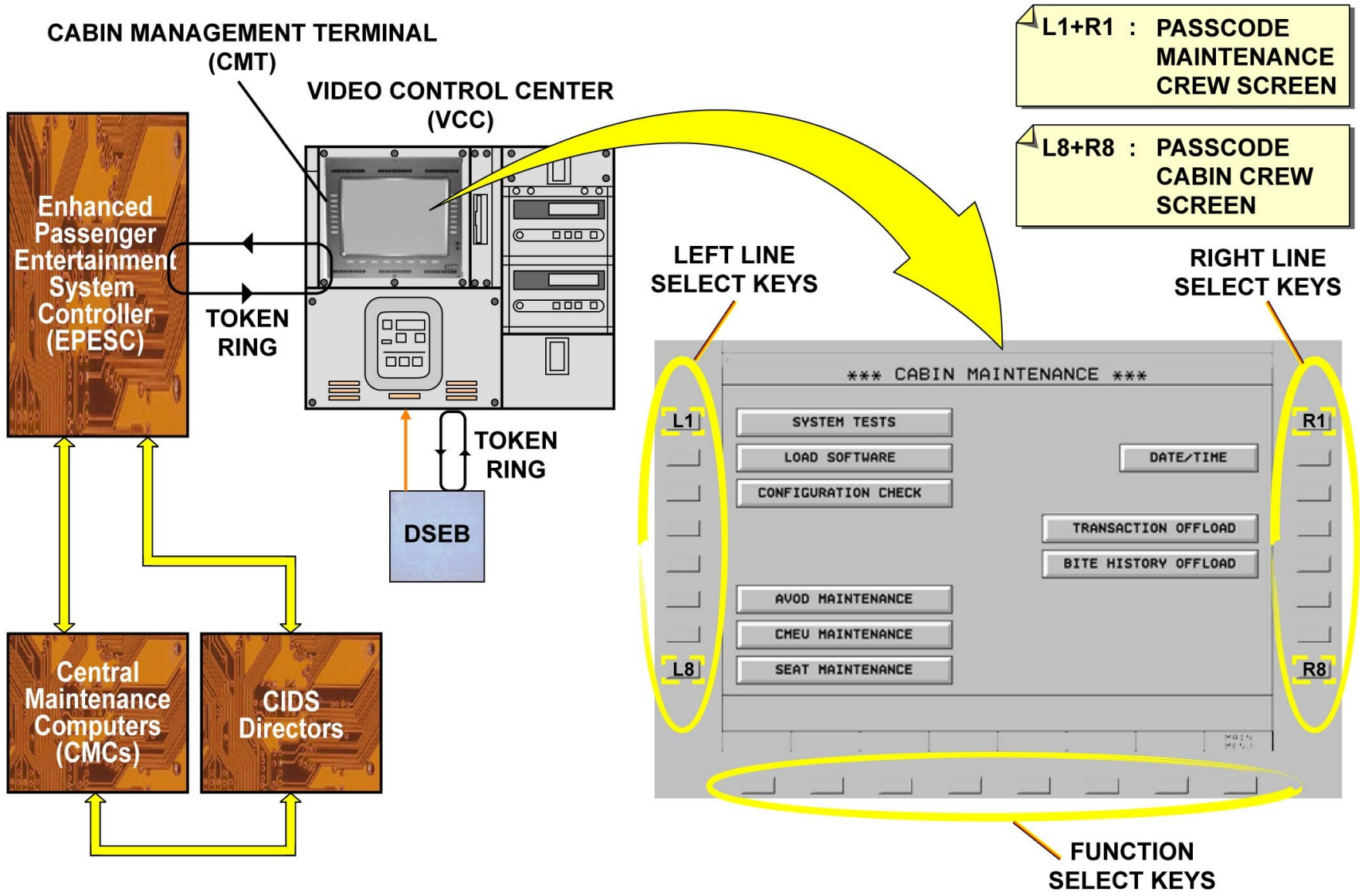

BITE

G7508471 - G7OT0T0 - FM23DD000000001

IFE SYSTEM D/O (THALES) (3)

SYSTEM INTERFACE

The In-Flight Entertainment (IFE) system also interfaces with the following A/C systems:
- Passenger Air-to-ground Telephone System (PATS),
- Passenger Flight Information System (PFIS),
- Taxi Aid Camera System (TACS) (A340-600 only),
- Landscape Camera.

PATS

The IFE system lets each passenger use individual telephones. The Passenger Control Unit (PCU) has a keyboard, a microphone and a loudspeaker like a conventional telephone handset.
The passenger telephone request is acquired by the Digital Seat Electronic Box (DSEB). The DSEB converts the request into a token and sends it to the Enhanced Passenger Entertainment System Controller (EPESC) via the cabin network.
The EPESC processes the request and sends it to the Cabin Telecommunications Unit (CTU).
A telephone communication is then opened using the SATCOM system of the A/C. The telephone signal between the EPESC, the CTU and the SATCOM is encoded into a specific digital signal.

PFIS

The PFIS continuously gives updated flight and destination information to the passengers.
The main components of the PFIS are the Random Access Device (RAD) and the Digital Interface Unit (DIU).
The DIU uses data from A/C systems to build the requested screens.
The RAD is a CD-based random access digital audio/video reproducer.
Depending on the A/C position, the RAD will automatically give video sequences to the passengers for example of details on the country over flown points of interest, or safety procedures.

The PFIS sends video and audio data to the IFES.
Audio data is directly sent to the EPESC.
Data from the PFIS can be requested either by the crew from the Video Control Center (VCC), or by the passengers from the PCU or the tactile screen. In both cases, the EPESC acquires the request and sends it to the DIU. Data from the PFIS can be broadcasted on the overhead displays or on the individual passenger screens.

G7508471 - G7OT0T0 - FM23DD000000002

SYSTEM INTERFACES

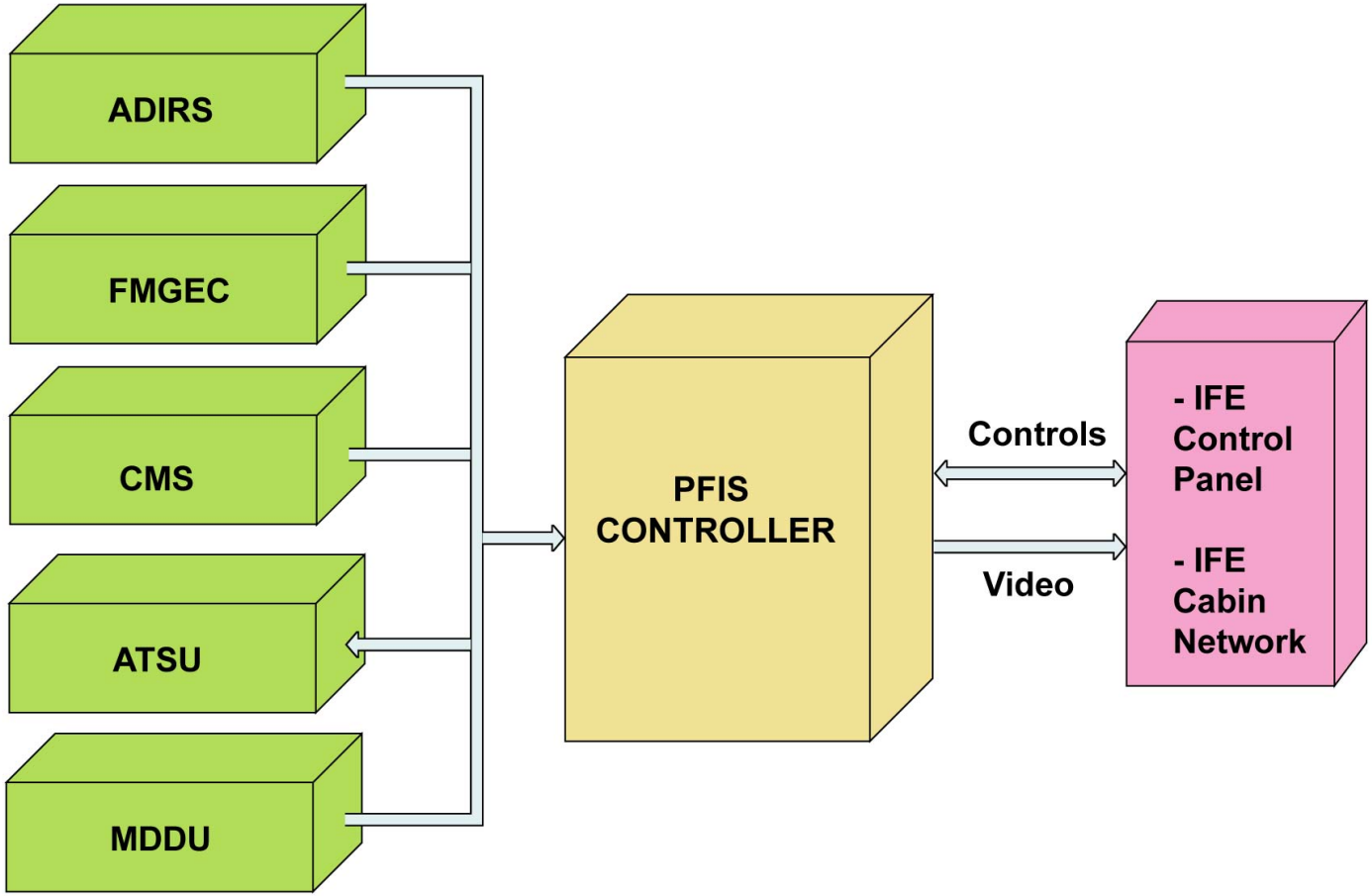

SYSTEM INTERFACE - PATS & PFIS

G7508471 - G7OT0T0 - FM23DD000000002

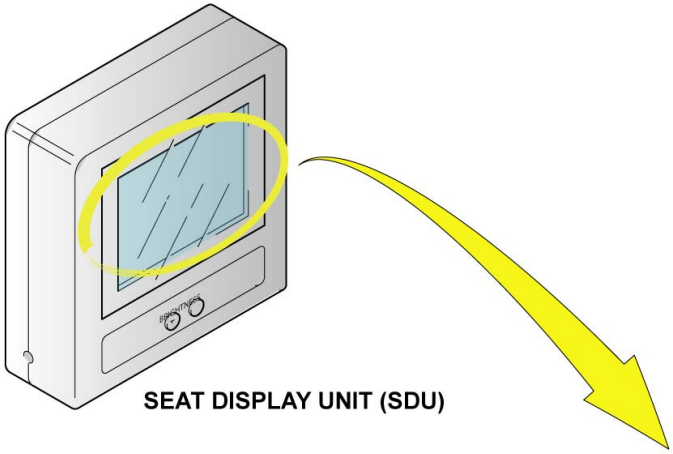

SYSTEM INTERFACE - PATS & PFIS

This Page Intentionally Left Blank

G7508471 - G7OT0T0 - FM23DD000000002

IFE SYSTEM D/O (THALES) (3)

SYSTEM INTERFACE (continued)

TACS (A340-600 ONLY)

The IFES system enables an interface with the TACS. For taxiing functions, the TACS enables the video images of the NLG and MLG to be displayed on the CAPT and F/O Primary Flight Displays (PFDs) and the ECAM SD.

Video from the TACS can be requested either by the cabin crew from the VCC, or by the passengers from the PCU or the tactile screen. In both cases, the EPESC acquires the request and sends it to the CIU.

G7508471 - G7OT0T0 - FM23DD000000002

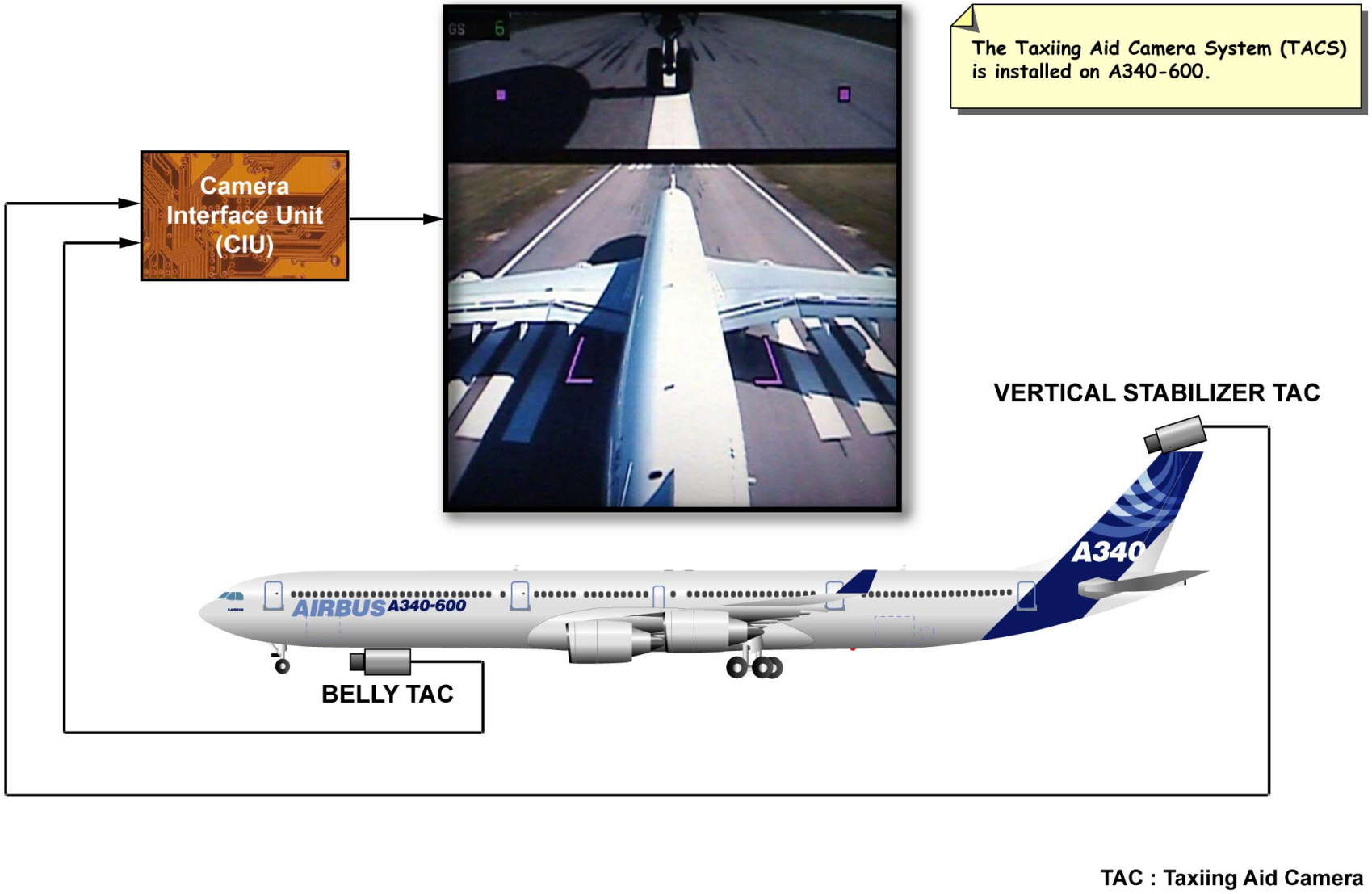

SYSTEM INTERFACE - TACS (A340-600 ONLY)

IFE SYSTEM D/O (THALES) (3)

SYSTEM INTERFACE (continued)

LANDSCAPE CAMERA (OPTION)

Optionally, the Landscape Camera System shows to the passengers a view of the area in front and below the aircraft through the PES Video. An override switch is installed on the cockpit panel 272 VU. It is used to stop or start the video outputs of the two cameras, in the event of turbulence for example.
The Landscape Camera is installed in front of the aircraft, next to the Nose Landing Gear.

G7508471 - G7OT0T0 - FM23DD000000002

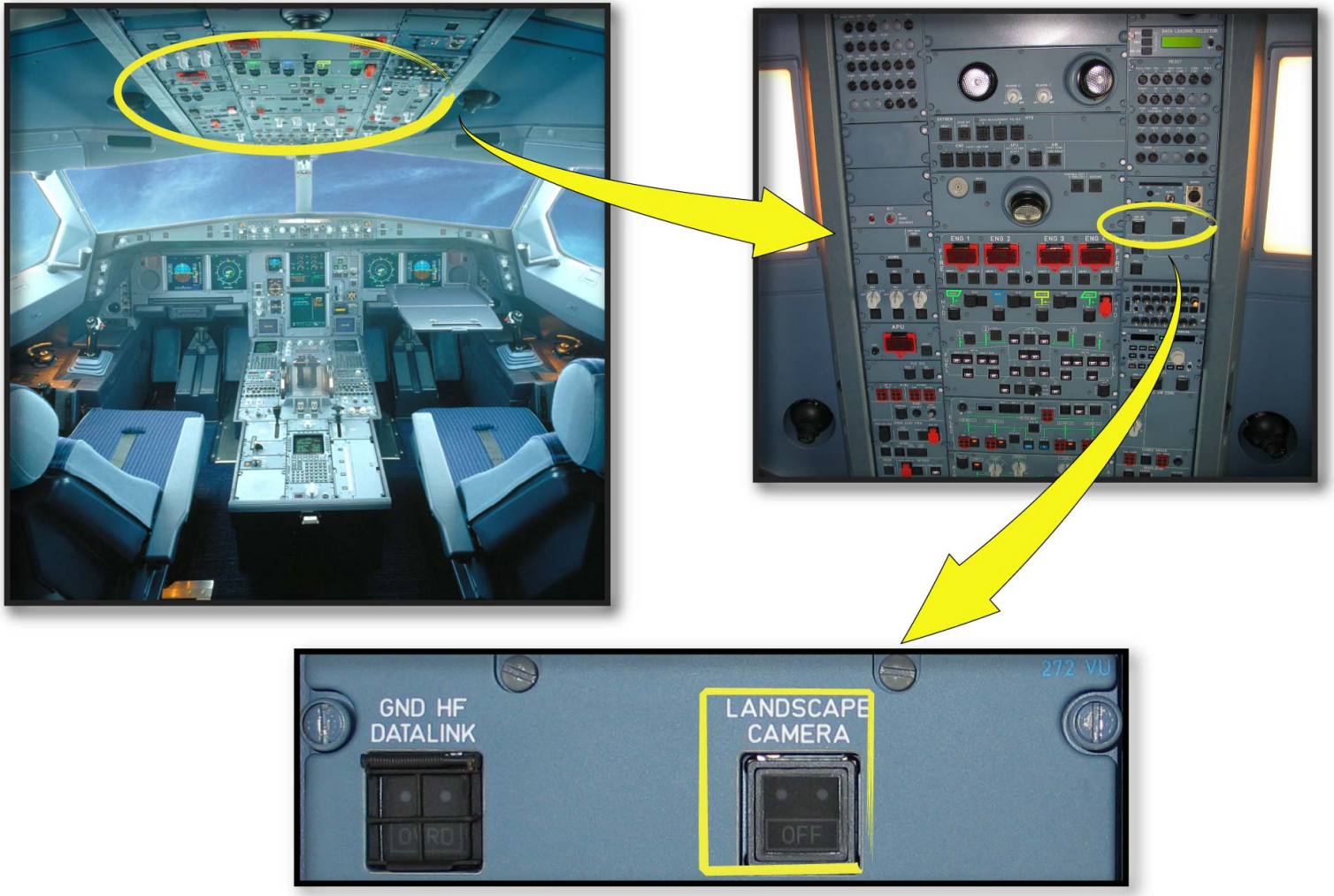

LANDSCAPE CAMERA CONTROL PANEL (272VU)

SYSTEM INTERFACE - LANDSCAPE CAMERA (OPTION)

G7508471 - G7OT0T0 - FM23DD000000002

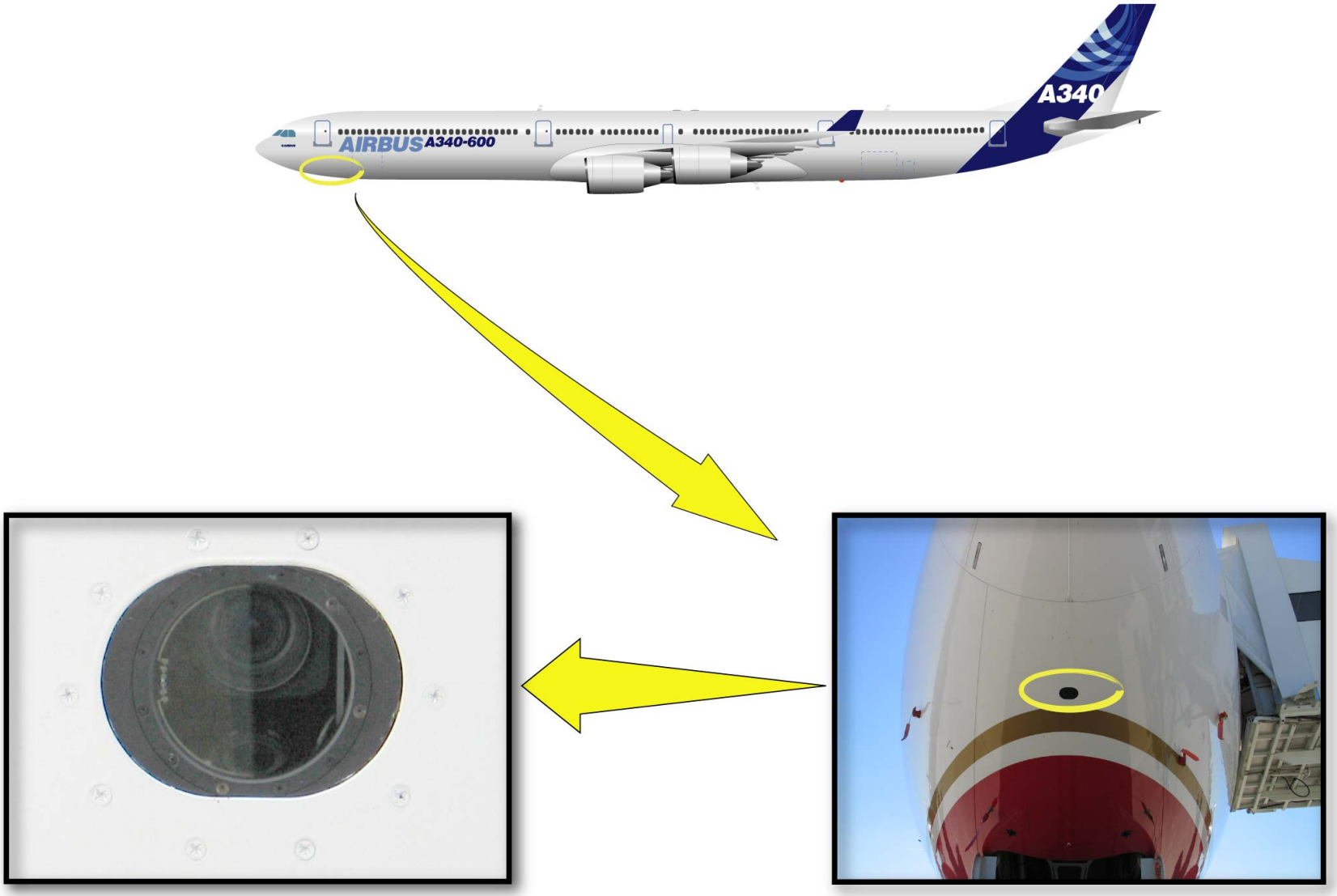

SYSTEM INTERFACE - LANDSCAPE CAMERA (OPTION)

This Page Intentionally Left Blank

G7508471 - G7OT0T0 - FM23DD000000002

IFE SYSTEM D/O (THALES) (3)

PATS

The main component of the Passenger Air-to-Ground Telephone System (PATS) is the Telecommunications Unit (CTU). It is installed in the avionics compartment. It gives the cabin telephone and data transmission capabilities, and is responsible for the air to ground calls and fax.
The A/C can have different telecommunication systems:
- wall-mounted telephone, and in-seat telephone,
- digital printer / fax machine,- cordless telephone and Cabin Wire Less Unit (CWLU). The CWLU is part of "Fly Smart".
Communication is achieved, directly or via the IFE system, with the CTU, which transmits communications to the SATCOM.
The CTU receives voice data originating from the passenger telephone handsets and converted to CEPT.E1 protocol by the zone telephone controller found in the EPESC. It also receives voice data originating from the ground public telephone network through the SATCOM. The CTU concentrates voice data, credit card data and telephone number data from cabin seats as well as ground telephone voice data to transmit to the passenger handset. Failure of the zone telephone controller in the EPESC to translate token ring to CEPT.E1 will stop all telephone and fax communication.

NOTE: CEPT.E1 (Conference European Post and Telecommunications standard E1) is a digital telecommunications protocol.

G7508471 - G7OT0T0 - FM23DD000000002

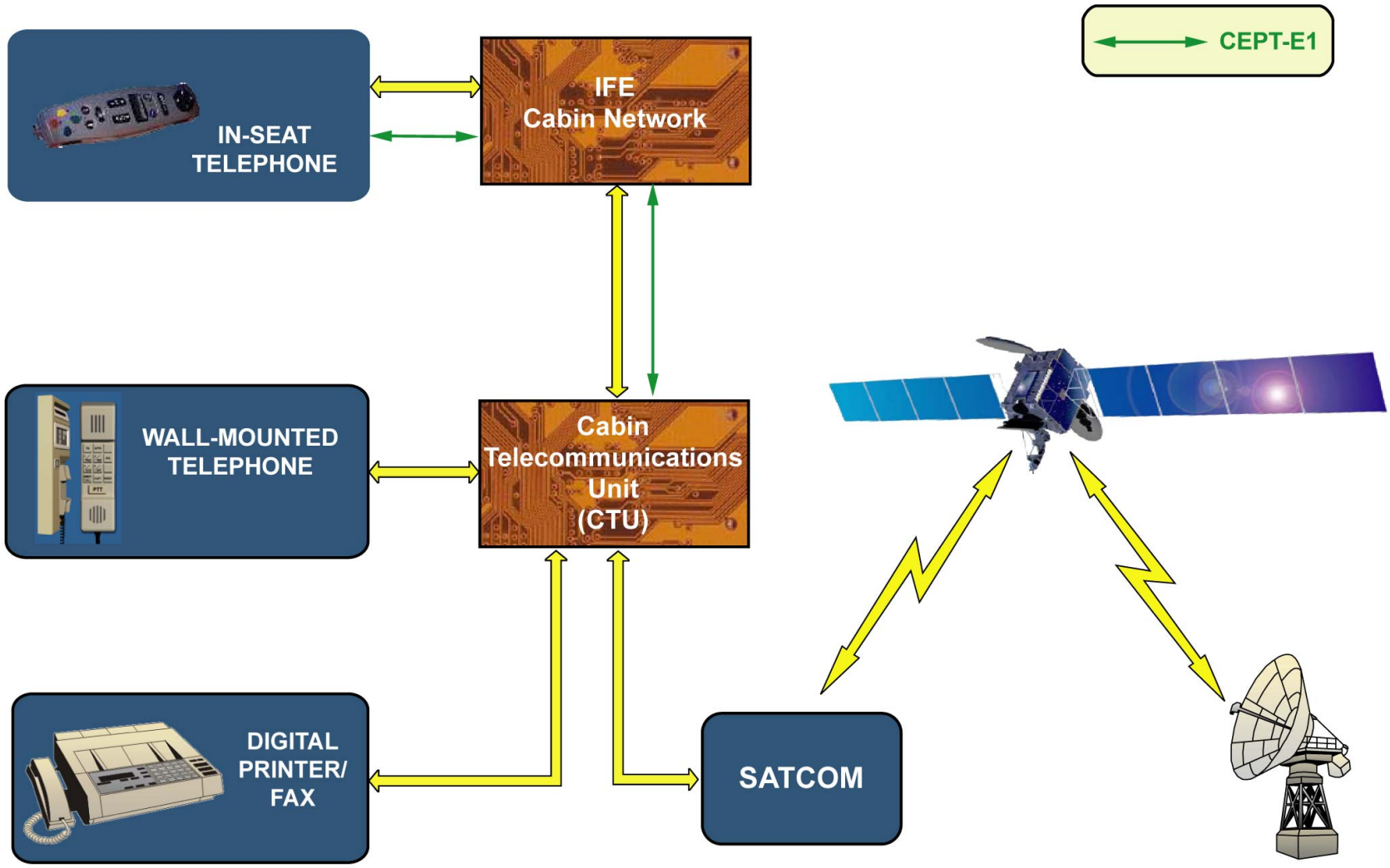

PATS

G7508471 - G7OT0T0 - FM23DD000000002

IFE SYSTEM D/O (THALES) (3)

PATS (continued)

COMPONENT LOCATION

The component location of the PATS is described on the A340-600, in this example. It is composed of a fixed handset and a telephone antenna (THALES).

G7508471 - G7OT0T0 - FM23DD000000002

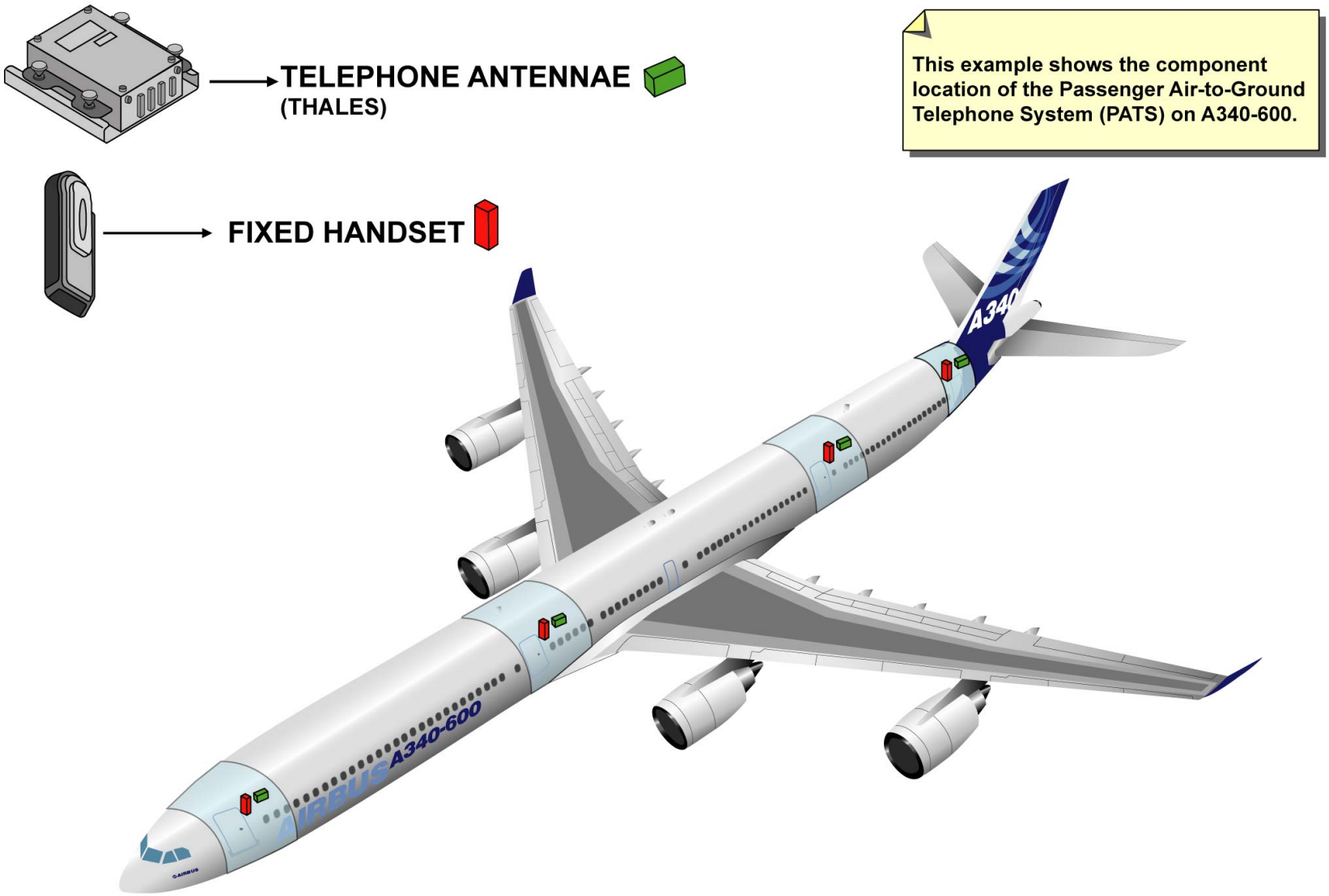

PATS - COMPONENT LOCATION

IFE SYSTEM D/O (THALES) (3)

PATS (continued)

SYSTEM DESCRIPTION

To make an air-to-ground telephone call as easy as possible, the PATS is designed to operate like a public phone. In some features, the PATS is different from a public telephone (e.g insert credit card for payment) and the passenger gets additional information by messages through the handset display. Additional instructions are given to passenger on the display window of the telephone handset. The PATS has three independent systems, including several components:
- the cabin distribution system (fixed-wired telephone system),
- the SATCOM (bearer system),
- CTU (interface box).

A passenger Email application is available via IFE Server with Satcom that enables passengers to send and receive E-mail or SMS.

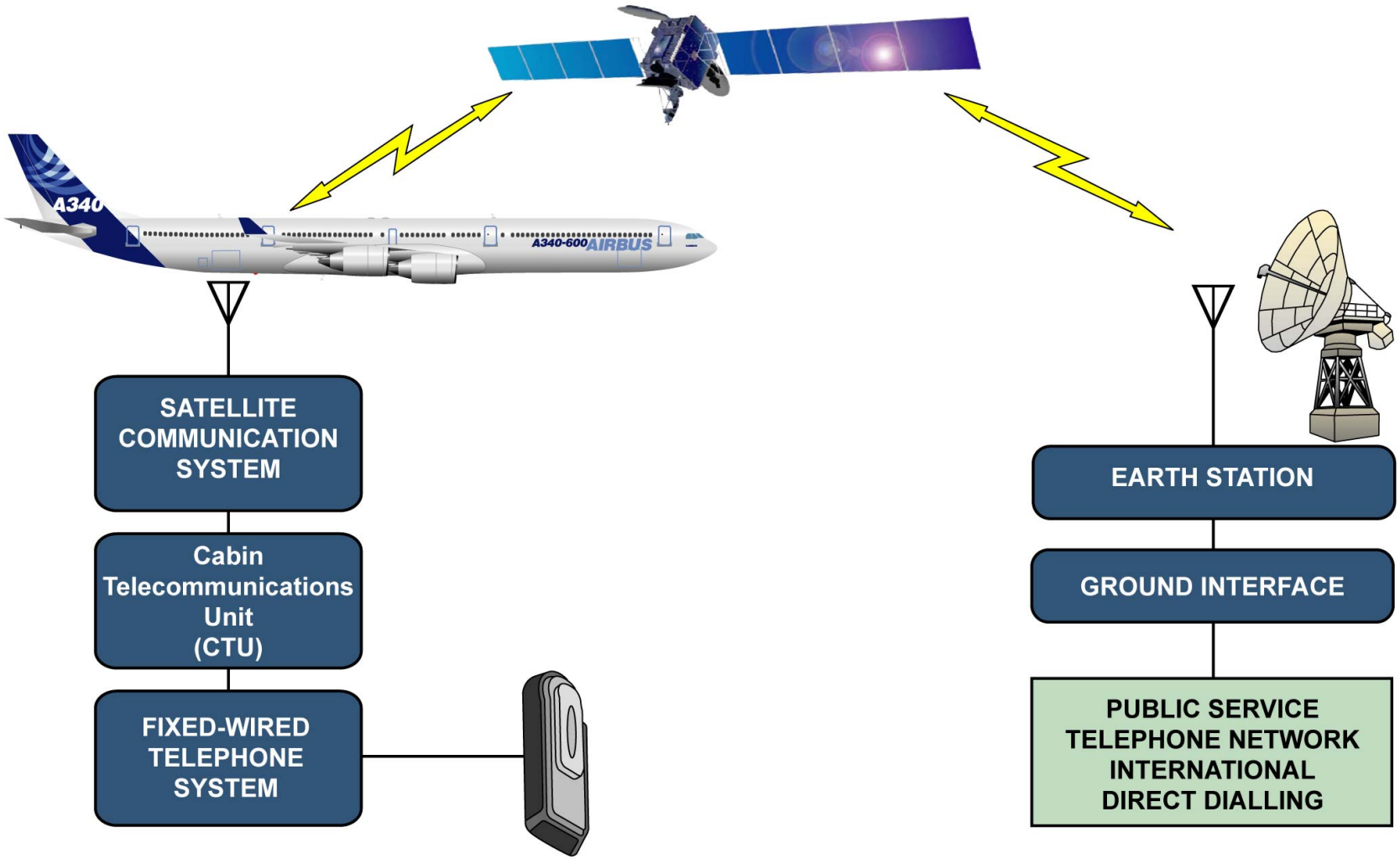

PATS - SYSTEM DESCRIPTION

G7508471 - G7OT0T0 - FM23DD000000002

IFE SYSTEM D/O (THALES) (3)

CABIN AND SEAT NETWORKS

Just the same as for other seat electrical equipment, seat IFE components are powered from the Seat Power Supply System (SPSS) which in turn has the following units:
- Master Control Unit (MCU),
- Power Floor Disconnect Boxes (PFDBs).

The integration of SPSS permits a future evolution towards enhanced power management due to data communication between the MCUs and the IFE head end equipment. It shall be possible to switch off the IFE system and the Seat Power Supply System (SPSS) from the cockpit and the VCC.

G7508471 - G7OT0T0 - FM23DD000000002

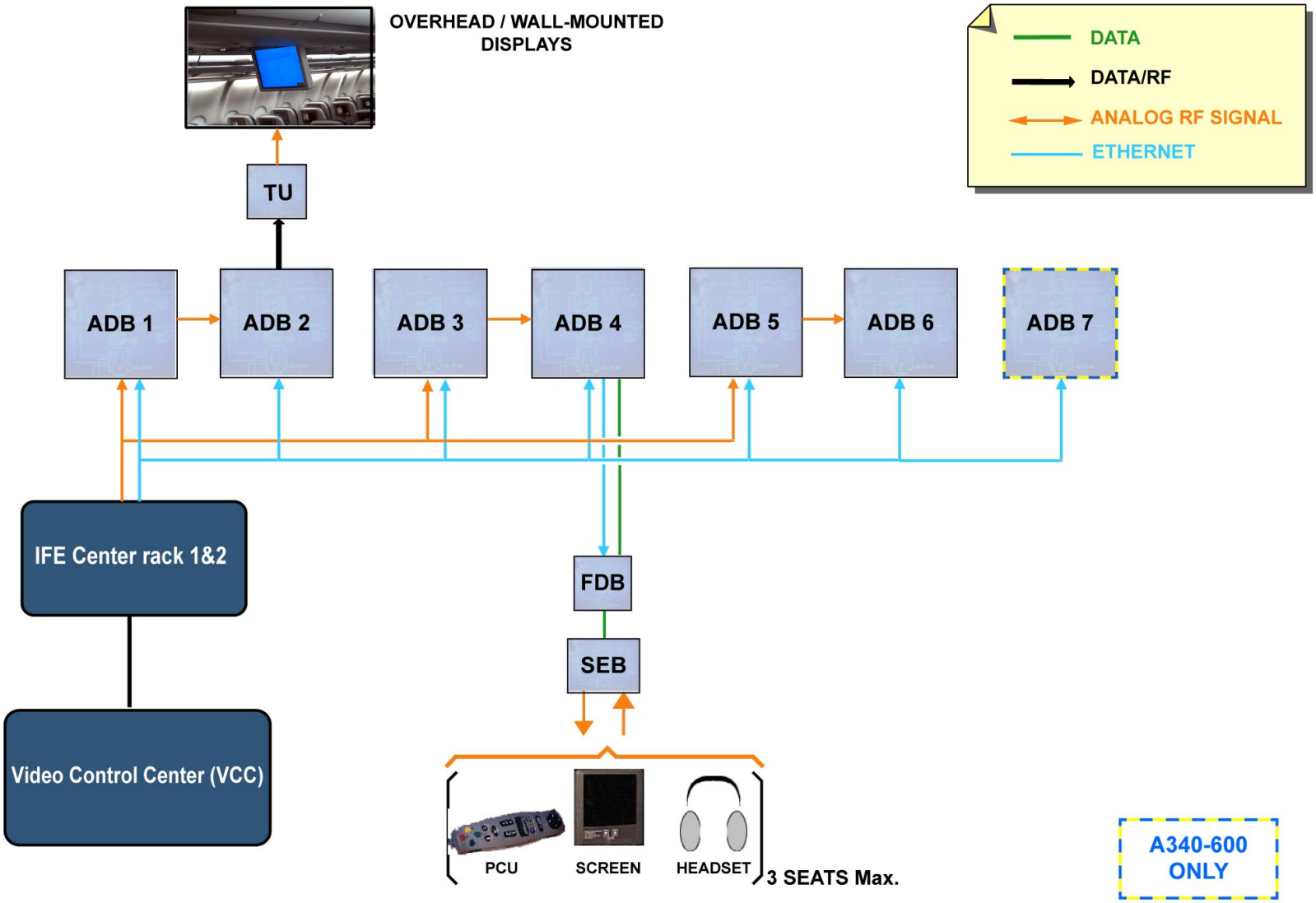

CABIN AND SEAT NETWORKS

IFE SYSTEM D/O (THALES) (3)

CABIN AND SEAT NETWORKS (continued)

COMPONENT LOCATION

The RJ45 plug located in the seat lets owners' laptop send and receive emails. The in-seat power supply unit (ISPSU) supplies 110VAC/60Hz to the related power outlet units.
The IFE center is installed in the avionics compartment. The IFE is installed on two racks:
- rack 1 for the basic IFE head end equipment,
- rack 2 for the AVOD servers (when required).
On Video Control Center (VCC), there are plugs and ports. The RJ45 jacks are used in Maintenance Mode when loading software contents. The USB Ports may be used in either Entertainment or Maintenance Modes. In Maintenance Mode they are used for the loading of daily contents or small.

G7508471 - G7OT0T0 - FM23DD000000002

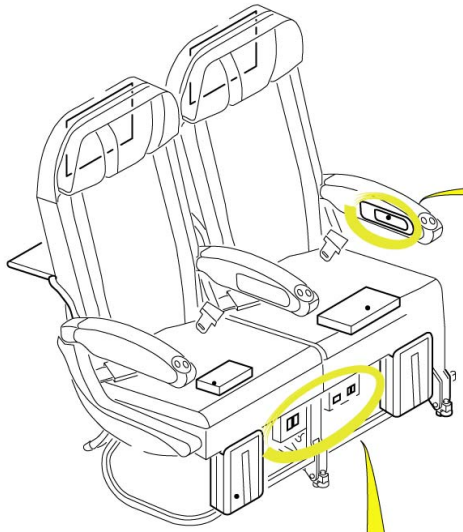

PASSENGER CONTROL UNIT (PCU)

PED POWER OUTLET

POWER OUTLET UNIT & USB PORT

CABIN AND SEAT NETWORKS - COMPONENT LOCATION

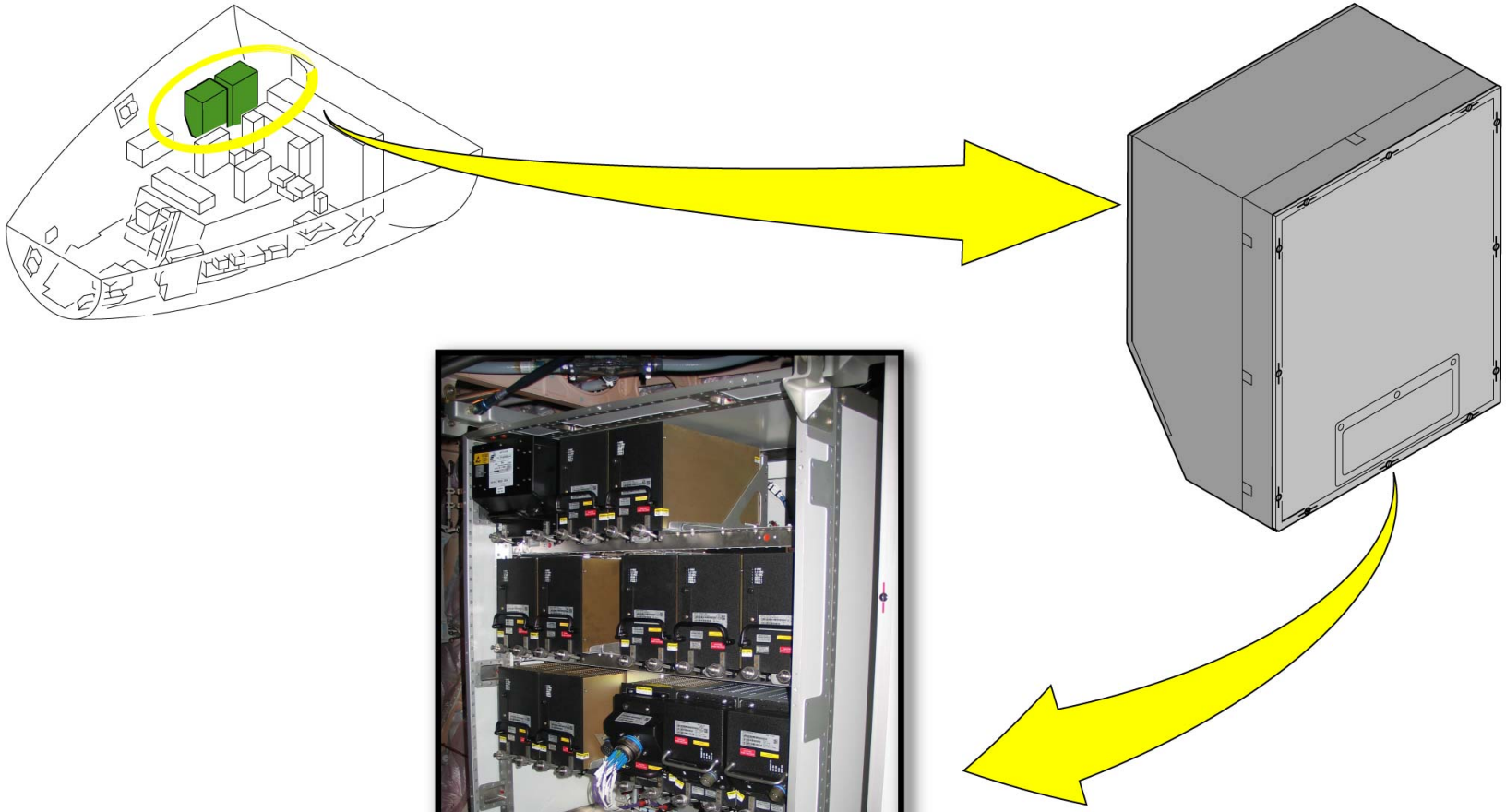

IFE CENTER RACK

CABIN AND SEAT NETWORKS - COMPONENT LOCATION

G7508471 - G7OT0T0 - FM23DD000000002

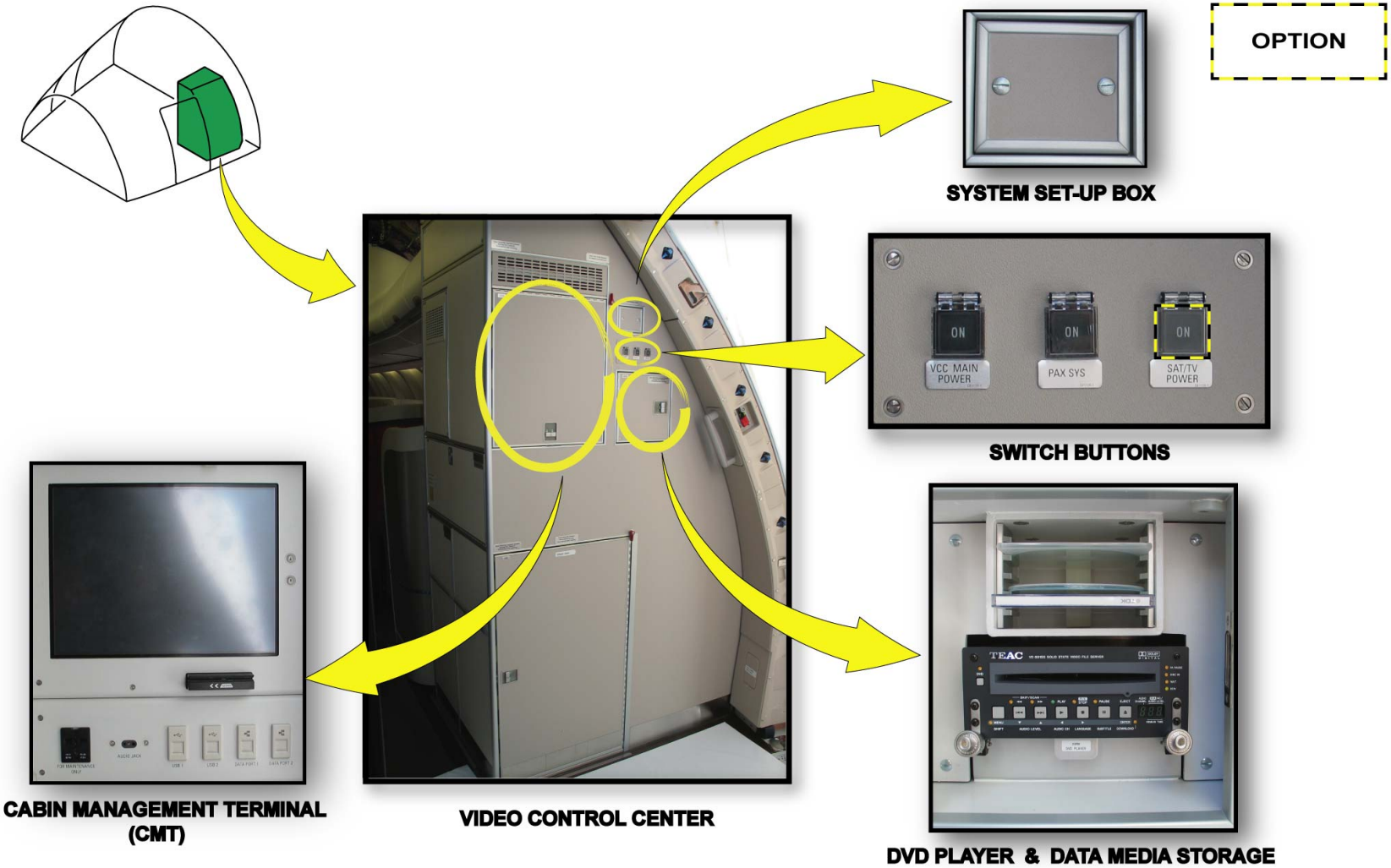

CABIN AND SEAT NETWORKS - COMPONENT LOCATION

IFE SYSTEM D/O (THALES) (3)

POWER SUPPLY

The IFE system is supplied through the FWD and aft cabin C/B panels. Three PAX SYS ON/OFF switches located in the cockpit on the overhead panel, in the VCC and on the Flight Attendant Panel (FAP) are used to cut off the power supply to the IFES. To maintain passenger comfort, two additional P/Bs (IFEC SMOKE/OFF and VCC SMOKE/OFF) are installed. These P/Bs are used by the crew to cut off electrical power of both IFE compartments in case of smoke detection and loss of ventilation, without the need to cut off the power supply to all passenger systems.
The Electrical Load Management Unit (ELMU) and the COMMERCIAL cockpit switch can also control the Remote Control Circuit Breakers (RCCBs) related to the IFES.
The VCC is directly connected to the cabin C/B panels. It has a MAIN switch, which cuts off the supply of all the IFE related systems.
The overhead network is supplied through the TUs and the video on enhanced ADBs on demand.
The seat network is supplied through the Master Control Units (MCUs) and the Power Floor Disconnect Boxes (PFDBs). Moreover each seat has C/Bs. The MCUs (BFE) supply 115VAC/ 400 Hz power to the in-seat equipment and are used for power management of seat electrical functions. The in-seat C/Bs increase the maintainability and make more flexibility in the IFES operation. Indeed, the Portable Electronic Devices (PEDs) power may be switched off, from the cockpit or the FAP, while maintaining other seat capabilities operative.

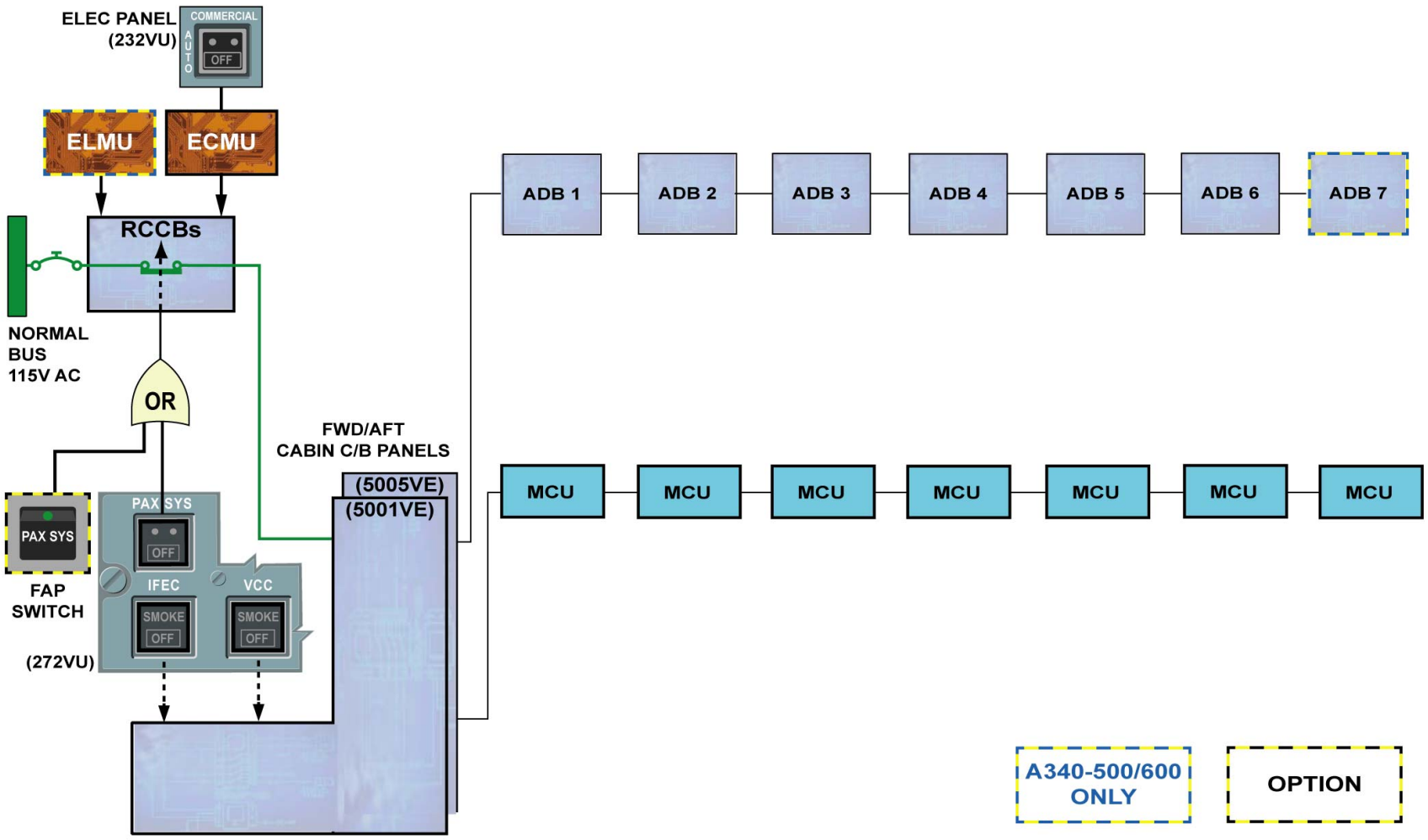

POWER SUPPLY

IFE SYSTEM D/O (THALES) (3)

BITE

The EPESC centralizes all the BITE status of the IFES LRUs and interfaces with the Central Maintenance Computers (CMCs).
Specific interactive maintenance menus are directly accessible from the VCC using the Cabin Management Terminal (CMT).
The CMT is the primary Passenger Entertainment System (PES) interface for the flight attendants and the maintenance personnel. The CMT is a graphic interface and supplies the subsequent following functions:
- Control of video distribution to cabin zones,
- Cabin configuration management,
- Control of peripherals, such as preview of video and audio programs, monitor ON/OFF control, monitor lockout, airshow operation and VTR control,
- Start of BITE requests to all connected LRUs,
- Software load and configuration reports,
- Player controls, entertainment and passenger address, movie and video game lockout,
- Engineering test.

An internal Bite is done automatically at power up and can be manually initiated from the CMT.

G7508471 - G7OT0T0 - FM23DD000000002

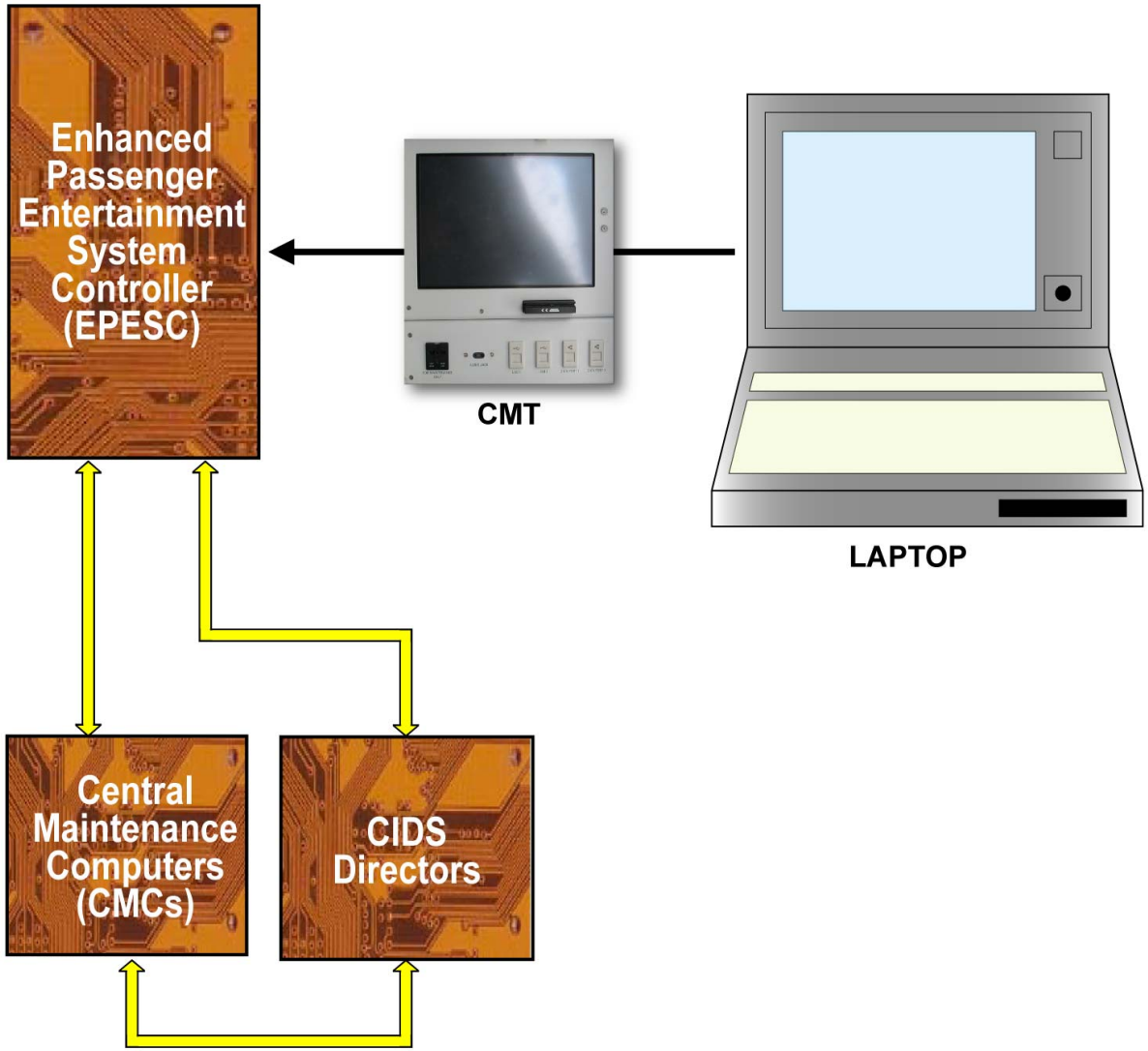

BITE

G7508471 - G7OT0T0 - FM23DD000000002

COCKPIT VOICE RECORDING D/O (3)

GENERAL

The objective of this topic is to describe in detail the principle and the architecture of the Cockpit Voice Recording (CVR) system.

PRINCIPLE

The Solid State Cockpit Voice Recorder (SSCVR) is designed to record crew conversations and communications on SOLID STATE MEMORIES, in flight or on ground, and to preserve them in case of an A/C accident.
The recordings are made in SOLID STATE MEMORIES which basically provide a 30-minute recording of continuous operation, or 2 hours with memory extension (+ 90 minutes). All data recorded 30 minutes or 2 hours before is automatically erased by the recording of new data.

SYSTEM ARCHITECTURE

The CVR system consists of:
- a remote microphone to record direct conversations and warnings in the cockpit,
- a CVR control unit, located in the cockpit on the overhead panel. The CVR control unit provides power for the area microphone, filters and pre-amplifies the audio signals from the area microphone and allows the control and monitoring of the SSCVR through the ERASE and TEST P/Bs.
- an SSCVR, located in the aft pressurized equipment bay. The SSCVR records all the transmitted and received radio communications, the Passenger Address (PA) announcements, the flight interphone conversations between flight crew members, all the aural warnings and the direct conversations in the cockpit.
- a logic relays A/C wiring system, composed of relays, the function of which is to allow the power supply of the SSCVR for normal, test or erase operation, under specific conditions.

PRINCIPLE AND ARCHITECTURE OF THE COCKPIT VOICE RECORDING SYSTEM

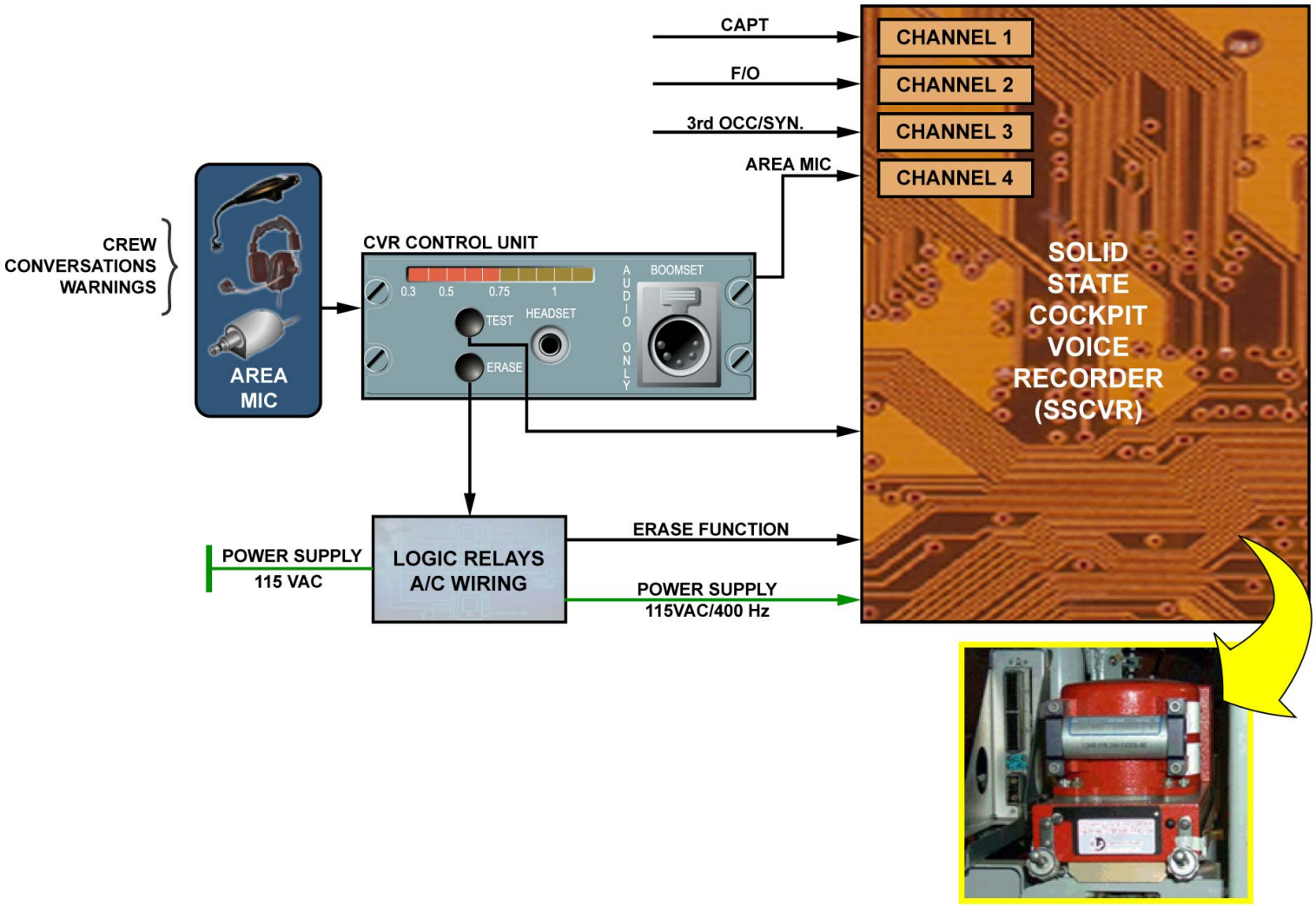

GENERAL - PRINCIPLE & SYSTEM ARCHITECTURE

COCKPIT VOICE RECORDING D/O (3)

OPERATION CONTROL AND INDICATING

The recording system consists of four channels:
- channels 1, 2 and 3 have a narrow band and allow the recording of the audio signals from/to the CAPT, F/O and 3rd occupant via the Audio Management Unit (AMU).
- channel 4 has a wide band and allows the recording of the crew conversations or warnings via the CVR control unit.
- the SSCVR is synchronized with the solid state flight data recorder by means of an audio signal corresponding to the Greenwich Mean Time (GMT) sent by the Flight Data Interface Unit (FDIU) to the audio system and received by the SSCVR on the third occupant channel.

A strap fitted on the rear connector of the AMU enables the selection between the FAA and the CAA recording options.
The FAA requires that all the transmitted or received communications be recorded. In transmission, the side tone only is recorded. The CAA requirements are almost the same as the FAA requirements, except that, in addition to the FAA requirements, the noises picked up by the boomset and oxygen mask microphone must be recorded, even when the Push To Talk (PTT) function is not activated.

POWER SUPPLY

To power the SSCVR, on ground or in flight, two modes are available: the automatic and the manual mode.
These two modes are conditioned by the logic relays A/C wiring.
The SSCVR is automatically supplied with 115 VAC/400 Hz, when the A/C is:
- on the ground, during the first 5 minutes of energization of the electrical network,
- on the ground, with at least 1 engine running,
- in flight,
- on the ground, up to 5 minutes after the last engine is stopped.

The manual selection of the power supply is done through the ReCorDeR GrouND ConTroL P/B. The manual selection of the SSCVR power supply, on ground only, is used to test the SSCVR for correct operation, to record the checklist before one engine is started or to erase the SOLID STATE MEMORIES, if required.

TEST AND MONITORING

The test and monitoring functions are initiated from the CVR control unit. They can be done on ground or in flight.
The monitoring of the four channels is possible by connecting a headset on the front face of the CVR control unit. An 800 Hz tone is heard for 1 to 2 seconds. The display is used for signal level control.

ERASE FUNCTION

The erase function is manually initiated from the CVR control unit by pressing the ERASE P/B for at least 2 seconds. The erase function is completed within 5 seconds of activation.
The PARKing BRAKE must be on, the L/G down and compressed.

G7508471 - G7OT0T0 - FM23DBF23VB0302

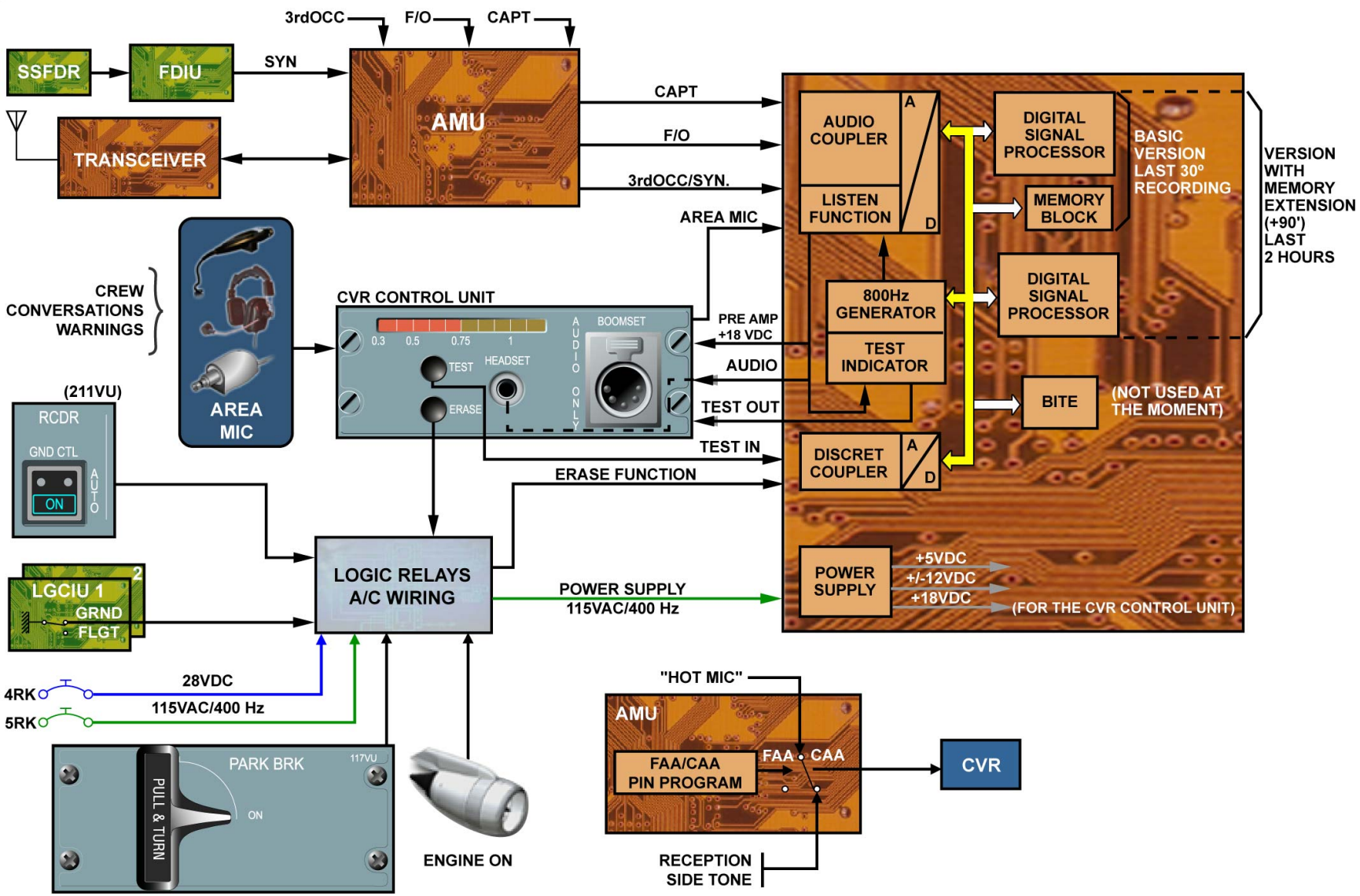

OPERATION CONTROL AND INDICATING - POWER SUPPLY ... ERASE FUNCTION

G7508471 - G7OT0T0 - FM23DBF23VB0302

COCKPIT DOOR SURVEILLANCE SYSTEM D/O (3)

GENERAL

The Cockpit Door Surveillance System (CDSS) is related to the Cockpit Door Locking System (CDLS) and uses cameras to prevent a hijacking attempt and protect the flight compartment against an intrusion. The CDSS images are displayed in the cockpit to let the flight crew identify a person in front of the cockpit door and to survey the hidden cross section in the door number 1 area.

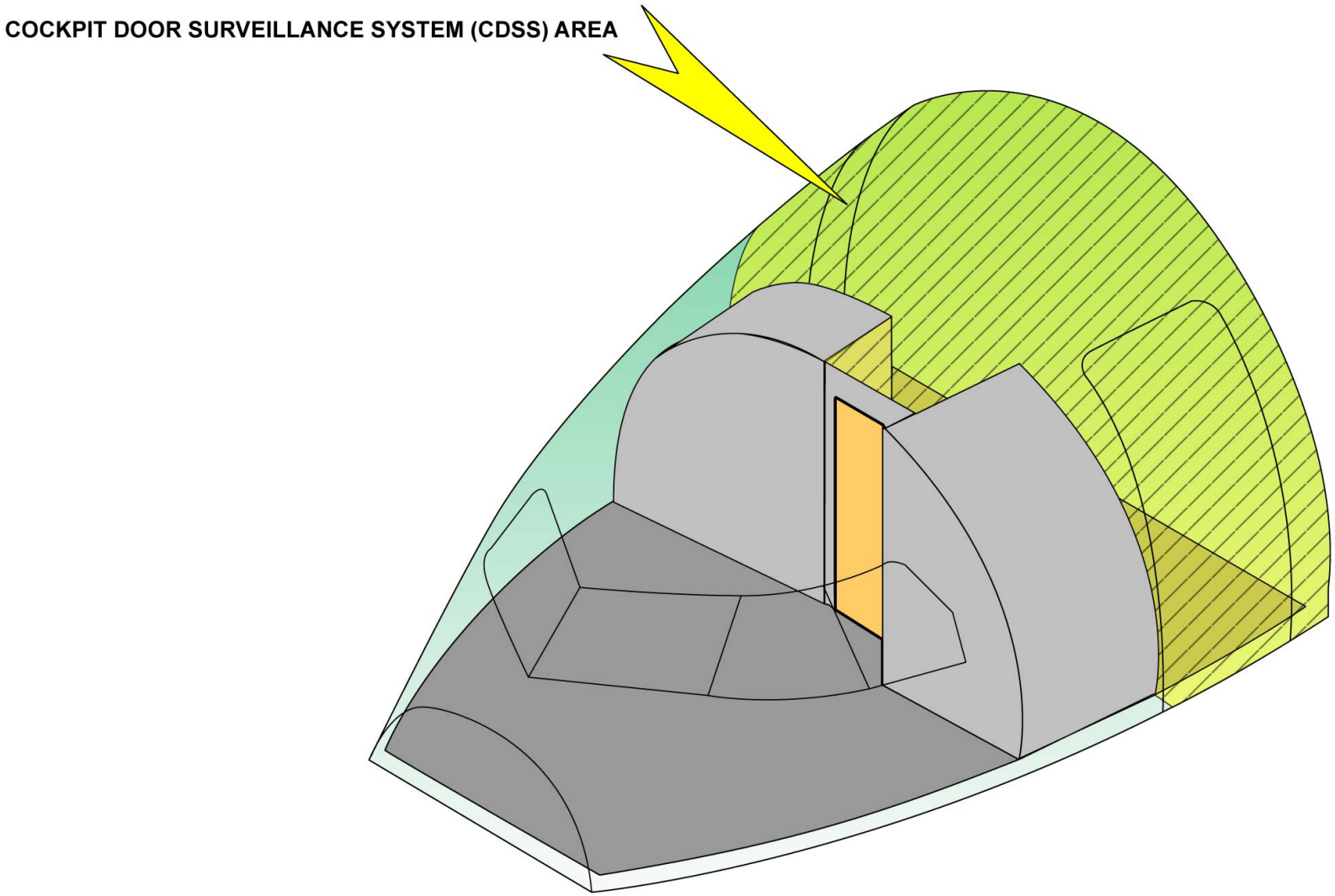

GENERAL

G7508471 - G7OT0T0 - FM23DF000000001

COCKPIT DOOR SURVEILLANCE SYSTEM D/O (3)

SYSTEM CONFIGURATION

Two types of CDSS can be installed. The first configuration has the following components:
- 3 cameras installed in the ceiling panels in the cockpit entrance and the door 1 area,
- 1 LCD mounted on the rear cockpit wall, with a system controller,
- 1 COCKPIT DOOR VIDEO P/B installed on the overhead panel,
- 1 VIDEO P/B installed on the pedestal, and,
- 1 CDSS "IN USE" indication light, installed above the FAP on the left door 1 area.

The second configuration has the following components:
- 3 cameras installed in the ceiling panels in the cockpit entrance and the door 1 area,
- 1 COCKPIT DOOR VIDEO P/B installed on the overhead panel,
- 1 CAMera SELection P/B,
- 1 CKPT ENTRY rotary switch installed on the pedestal, and,
- 1 system controller, installed in the avionics bay, to process and display images on the lower ECAM Display Unit (SD).

G7508471 - G7OT0T0 - FM23DF000000001

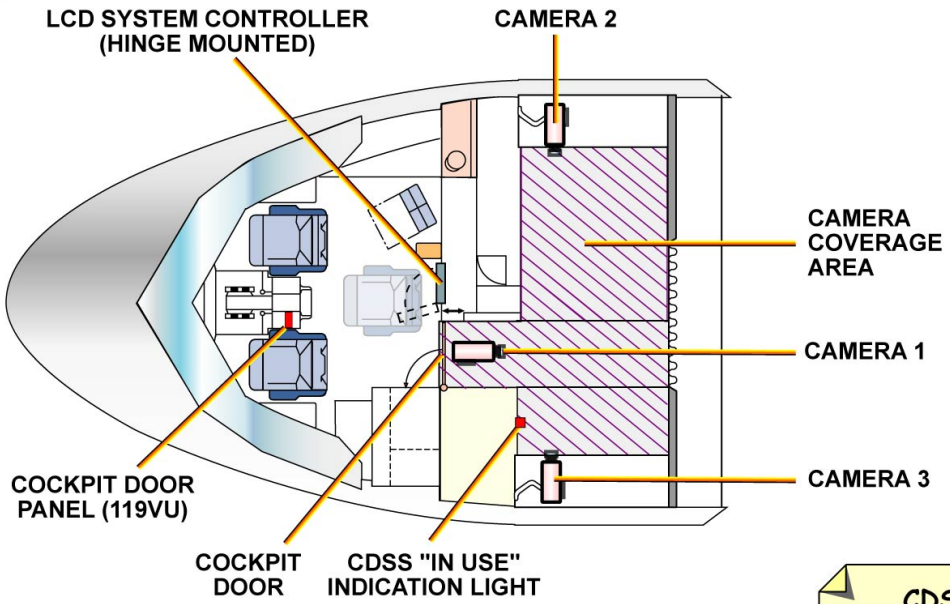

COCKPIT DOOR PANEL (119VU)

CDSS
configuration 1

COCKPIT DOOR
VIDEO PANEL (271VU)

LCD SYSTEM CONTROLLER

PICTURE FROM CAMERA 1

PICTURES FROM CAMERAS 2 & 3

CAMERA 1

CAMERA 2 OR CAMERA 3

SYSTEM CONFIGURATION

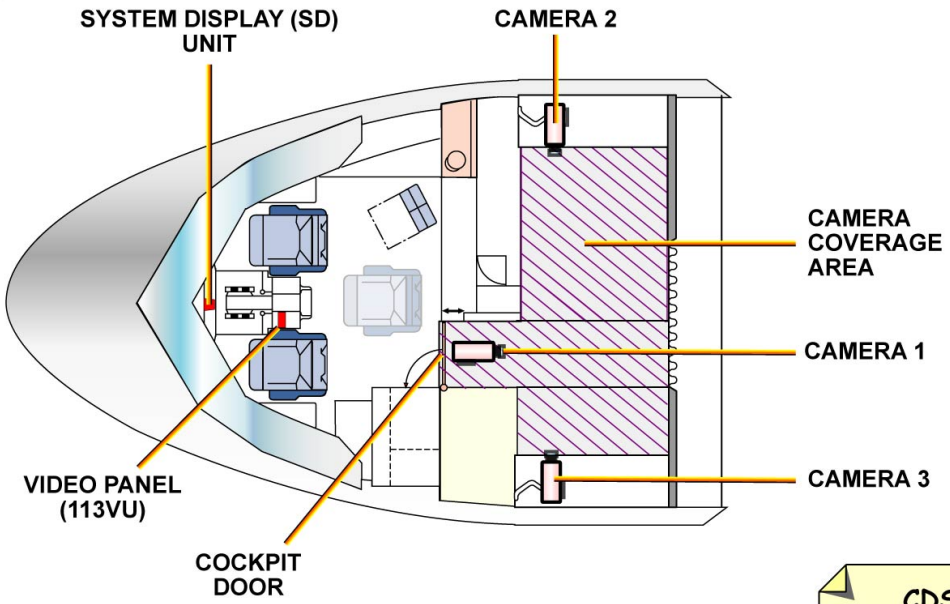

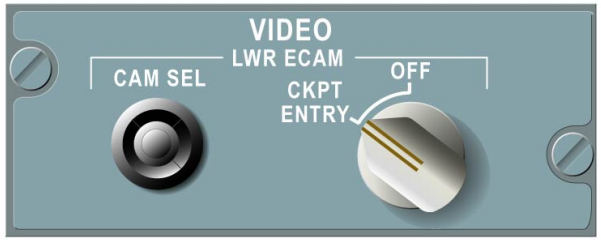

VIDEO PANEL (113VU)

CDSS configuration 2

COCKPIT DOOR VIDEO PANEL (271VU)

SYSTEM DISPLAY (SD)

SYSTEM CONTROLLER

CAMERA 1

CAMERA 2 OR CAMERA 3

SYSTEM CONFIGURATION

This Page Intentionally Left Blank

G7508471 - G7OT0T0 - FM23DF000000001

COCKPIT DOOR SURVEILLANCE SYSTEM D/O (3)

SYSTEM DESCRIPTION - CONFIGURATION 1

CAMERAS

Each "NTSC video format" black and white video camera is hidden in a flight attendant working light housing and has an infrared light to get personal recognition. One video camera installed above the cockpit door helps you to get a clear personal recognition of the person requesting entrance to the cockpit. A second video camera installed in the ceiling of the RH door n°1 and a third one installed in the ceiling of the LH door n°1 let you recognize a person hidden behind the galley and the lavatory wall.

LCD

The pivoting hinge 6.4" LCD with system controller lets the flight crew view the pictures from the cameras. Pictures from the camera 1 are displayed as a full screen whereas pictures from cameras 2 and 3 are displayed as a split screen, LH side for the camera 2 and RH side for the camera 3. On the front face of the LCD, the green LED comes on when the system is operating and this LED flashes when a failure occurs in the system. The white LED is a light sensor, which automatically controls the brightness on the LCD screen.

CONTROL

The CKPT DOOR VIDEO P/B sets the CDSS on or off. The VIDEO P/B lets the flight crew select the picture from camera 1, or from the cameras 2 and 3. It also lets the flight crew put the system into the standby/power save mode (blank screen) when it is pushed and held for two seconds. The LCD also goes into this mode if the system gets no signal from the VIDEO P/B or the CDLS for one minute. If the CDSS receives an entry request discrete from the CDLS, the LCD automatically comes on (if the LCD was on the standby/power save mode) and shows the picture from the camera 1. The CDSS "IN USE" indication light comes on when a camera is selected.

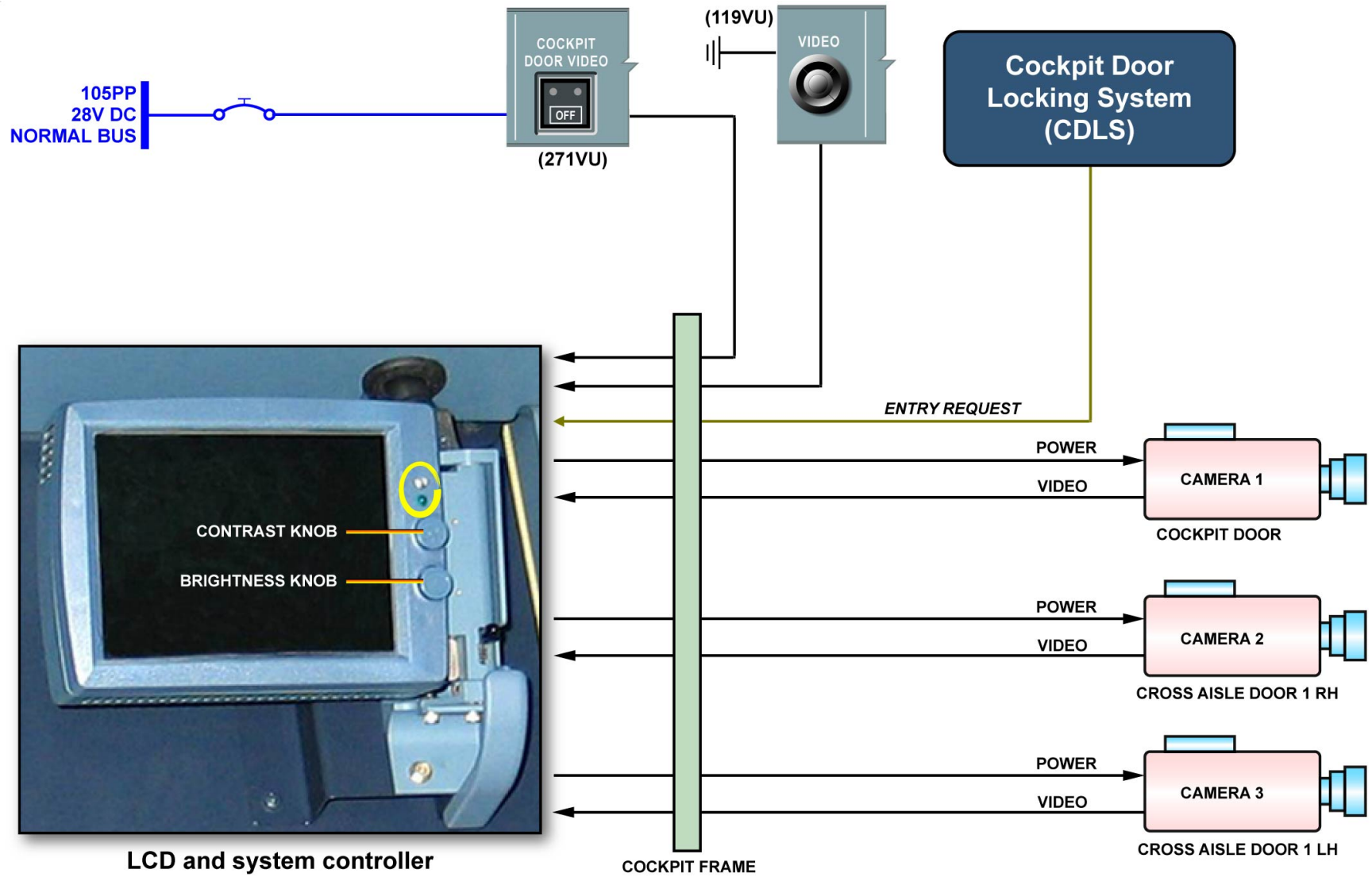

SYSTEM DESCRIPTION - CONFIGURATION 1 - CAMERAS ... CONTROL

COCKPIT DOOR SURVEILLANCE SYSTEM D/O (3)

SYSTEM DESCRIPTION - CONFIGURATION 1 (continued)

BITE

When a failure is detected in the CDSS, a message is shown on the LCD monitor in white text and the green LED is flashing. A failure history can be displayed on the LCD for 60 seconds by pushing the VIDEO P/B for more than 10 seconds. To delete the failure history memory the CDSS must be reset. To reset the CDSS:
- push the COCKPIT DOOR VIDEO P/B off then on and push and hold the VIDEO P/B for 5 seconds,
- after 5 seconds the message "CLEAR FAILURE HISTORY ? YES" appears on the LCD screen,
- push VIDEO P/B and wait for 15 seconds.

G7508471 - G7OT0T0 - FM23DF000000001

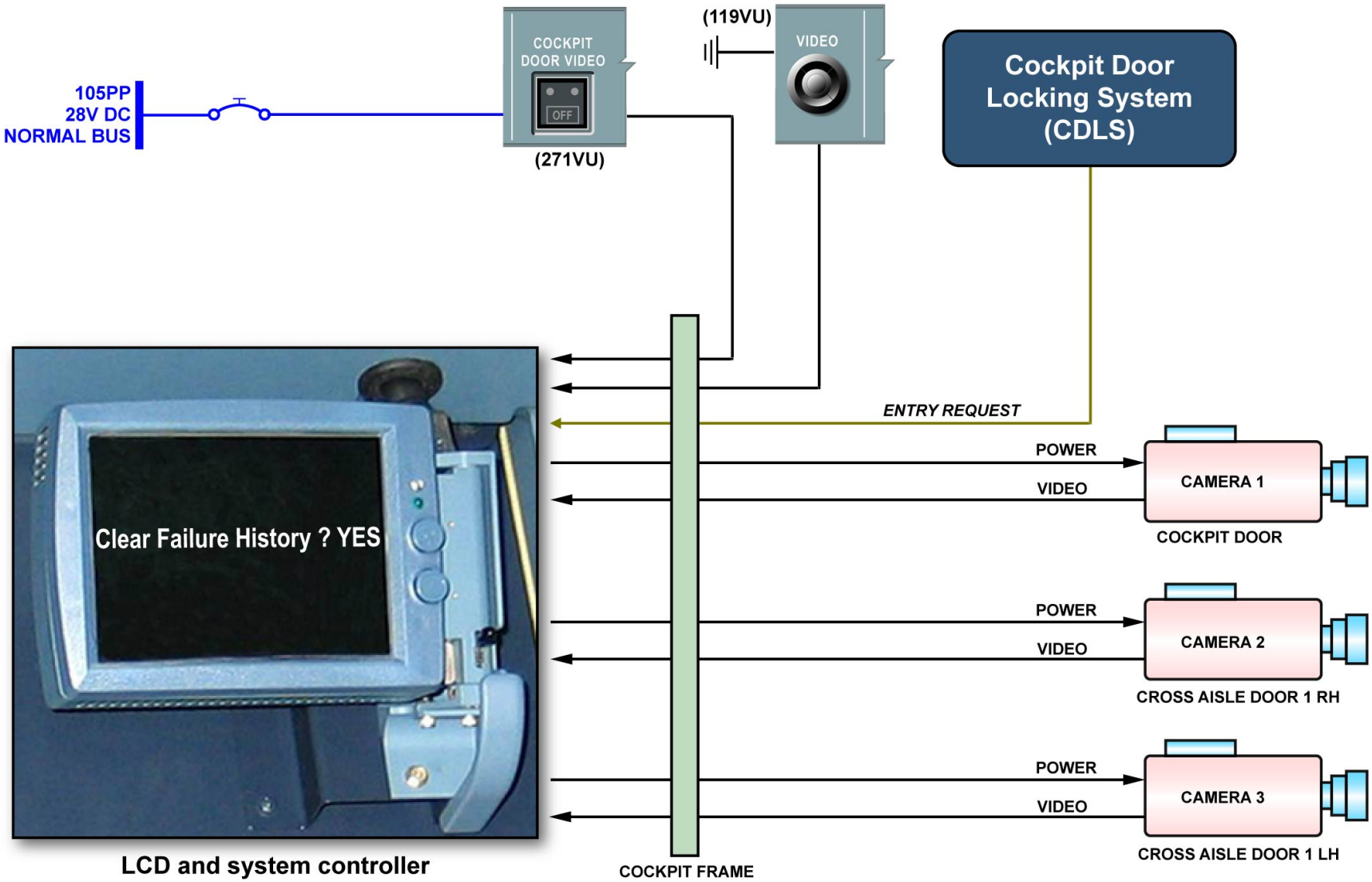

SYSTEM DESCRIPTION - CONFIGURATION 1 - BITE

COCKPIT DOOR SURVEILLANCE SYSTEM D/O (3)

SYSTEM DESCRIPTION - CONFIGURATION 2

CAMERAS

Each "NTSC video format" black and white video camera is hidden in a flight attendant working light housing and has an infrared light to get better personal recognition. One video camera installed above the cockpit door helps you to get a clear personal recognition of the person requesting entrance to the cockpit. A second video camera installed in the ceiling of the RH door n°1 and a third one installed in the ceiling of the LH door n°1 let you recognize a person hidden behind the galley and the lavatory wall. The pictures from the cameras are displayed on the SD. The pictures from the camera 1 are displayed as a full screen whereas pictures from cameras 2 and 3 are displayed as a split screen, LH side for the camera 2 and RH side for the camera 3.

SYSTEM CONTROLLER

The system controller is supplied by 115V AC through the COCKPIT DOOR VIDEO P/B, and gives 12V DC electrical power to energize the cameras. The system controller receives input signals from the cameras and also monitors the status of the CDSS. It processes the signal from the cameras and gives a video feed signal to the SD.

NOTE: On A340-600, the Video Multiplexer Unit (VIMU) is fitted if both TACS (Taxiing Aid Camera System) and CDSS are installed. The VIMU enables the video pictures from the CDSS or the TACS to be displayed on the SD.

CONTROL

The CKPT DOOR VIDEO P/B sets the CDSS on or off. The CAM SEL P/B lets the flight crew select the picture from camera 1, or from the cameras 2 and 3 on the SD unit. The LoWeR ECAM CKPT ENTRY rotary switch has two positions: CKPT ENTRY and OFF. A signal is sent to the Display Management Computers (DMCs) and to the system controller when the LWR ECAM rotary switch is set to the CKPT ENTRY position. If the CDSS receives an entry request discrete from the CDLS, the pictures from camera 1 are automatically displayed on the SD unit (if the LWR ECAM rotary switch is set to the CKPT ENTRY position).

BITE

If a failure occurs in the CDSS, the related message is displayed on the SD unit. The detected failure is stored in the system controller and the failure is also sent to the Central Maintenance System (CMS) through the ARINC 426 data bus.

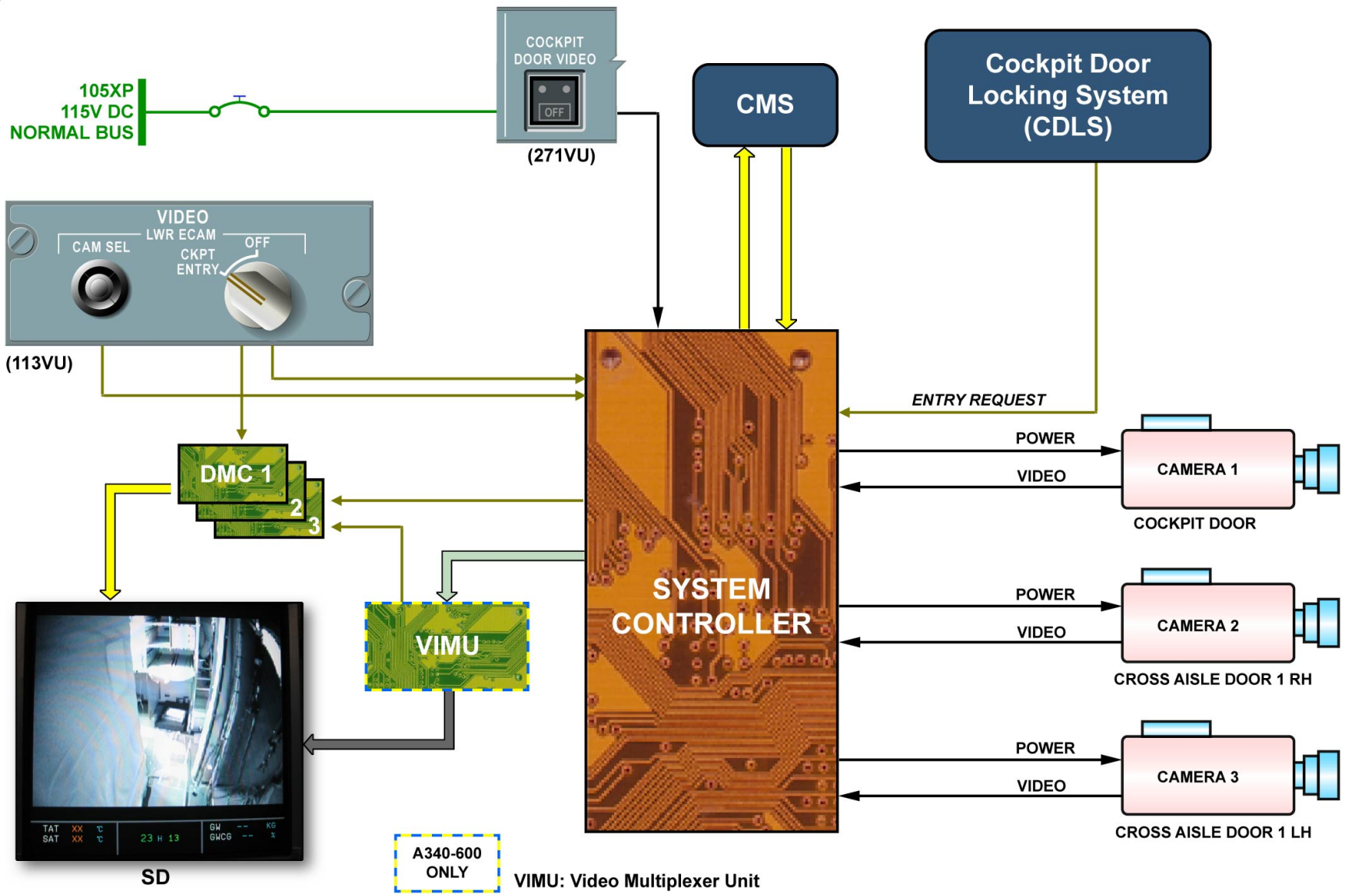

SYSTEM DESCRIPTION - CONFIGURATION 2 - CAMERAS ... BITE

AIRBUS S.A.S.
31707 BLAGNAC cedex, FRANCE
STM
REFERENCE G7508471
NOVEMBER 2008
PRINTED IN FRANCE
AIRBUS S.A.S. 2008
ALL RIGHTS RESERVED

AN EADS COMPANY

A330-200/300
TECHNICAL TRAINING MANUAL
MAINTENANCE COURSE - T1 (LVL 2&3) (RR Trent 700)
ELECTRICAL POWER

This document must be used for training purposes only

Under no circumstances should this document be used as a reference

It will not be updated.

All rights reserved
No part of this manual may be reproduced in any form,
by photostat, microfilm, retrieval system, or any other means,
without the prior written permission of AIRBUS S.A.S.

AIRBUS Environmental Recommendation
Please consider your environmental responsability before printing this document.

ELECTRICAL POWER

Electrical Power Line Maintenance Briefing (2) 2

GENERAL

Electrical System General Description (3) 42

AC GENERATION

Main AC Generation D/O (3) 64
Auxiliary AC Generation D/O (3) 82
Emergency AC Generation D/O (3) 100
Contactors Management D/O (3) 122

DC GENERATION

Main DC Generation D/O (3) 154
Emergency DC Generation D/O (3) 162

LOAD DISTRIBUTION

Load Management D/O (3) 174
Refuel on Battery D/O (3) 180

ELECTRICAL POWER LINE MAINTENANCE BRIEFING (2)

SYSTEM OVERVIEW

The electrical system supplies Alternating Current (AC) and Direct Current (DC) power to the aircraft systems according to the different electrical power sources available:
- the AC generation,
- the DC generation.

Each engine drives an Integrated Drive Generator (IDG) supplying AC power. The APU drives an additional generator (APU GEN) which can supply all the A/C network on ground or replace a main generator in flight. Two Transformer Rectifiers (TRs) use the alternating current to supply the main direct current network. Another transformer rectifier (ESS TR) supplies the essential direct current network. Two batteries supply also direct current in some configurations. The APU TR or/and a battery (APU BAT) power supply the APU starter, depending on the A/C configuration. In case of major failure, a constant speed hydraulic motor drives an emergency generator: both equipments make an assembly called Constant Speed Motor/Generator (CSM/G). The function of the CSM/G is to supply the necessary systems to the A/C control.

G7508471 - G3NT1T0 - FM24B1000000001

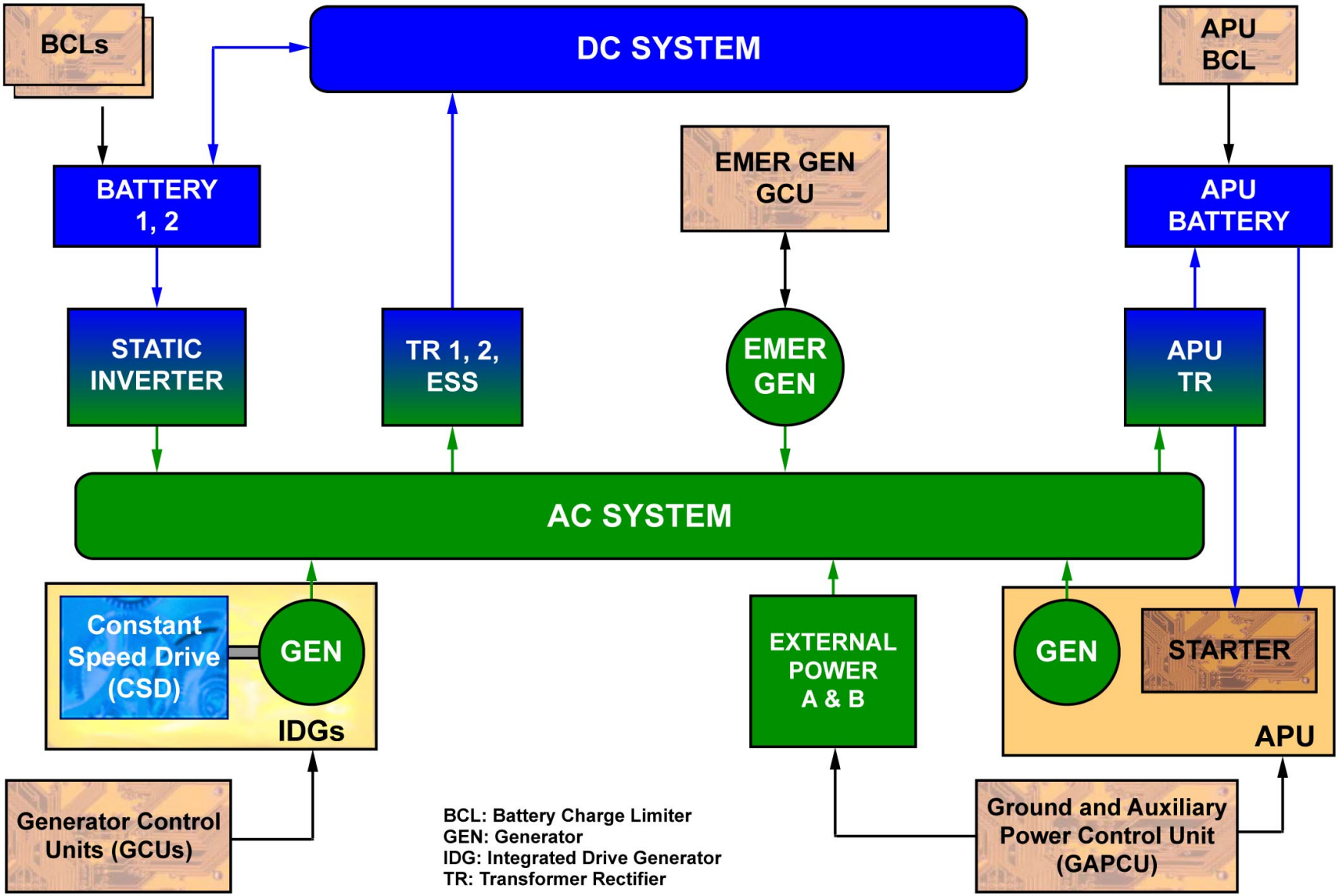

SYSTEM OVERVIEW

G7508471 - G3NT1T0 - FM24B1000000001

ELECTRICAL POWER LINE MAINTENANCE BRIEFING (2)

INTRODUCTION

This module gives information related to the electrical power system basic line maintenance and necessary precautions to service and dispatch the IDG. This information must fulfill a good A/C grounding and bonding, and keep batteries serviceable in a cold soak configuration through the following tasks:
- A/C electrostatic balancing for maintenance operations,
- IDG oil servicing of general warnings and cautions,
- visual inspection of the oil level,
- check of the IDG oil-filter Differential Pressure Indicator (DPI),
- IDG servicing-filling of the IDG with oil or addition of oil after a level check,
- cold weather maintenance for batteries.

NOTE: As an example, and because of same IDG procedures on long range A/C, only the A340 IDG will be shown in this module.

ENVIRONMENTAL PRECAUTIONS

Avoid use of the APU if APU BLEED air is not necessary. Turn-off unused ground service equipment (Ground Power Unit, air conditioning cart, etc...) if no work is being done or nobody is present on the aircraft.

A/C ELECTROSTATIC BALANCING FOR MAINTENANCE OPERATIONS

WARNING: In order to prevent electrical shock:
- do not wear a headset or touch cables/lines connected to the A/C when there is a risk of lightning,
- always connect the ground cable to the parking ground point before you connect it to the A/C.

NOTE: Grounding and bonding must be done with the correct grounding or bonding cable.

G7508471 - G3NT1T0 - FM24B1000000001

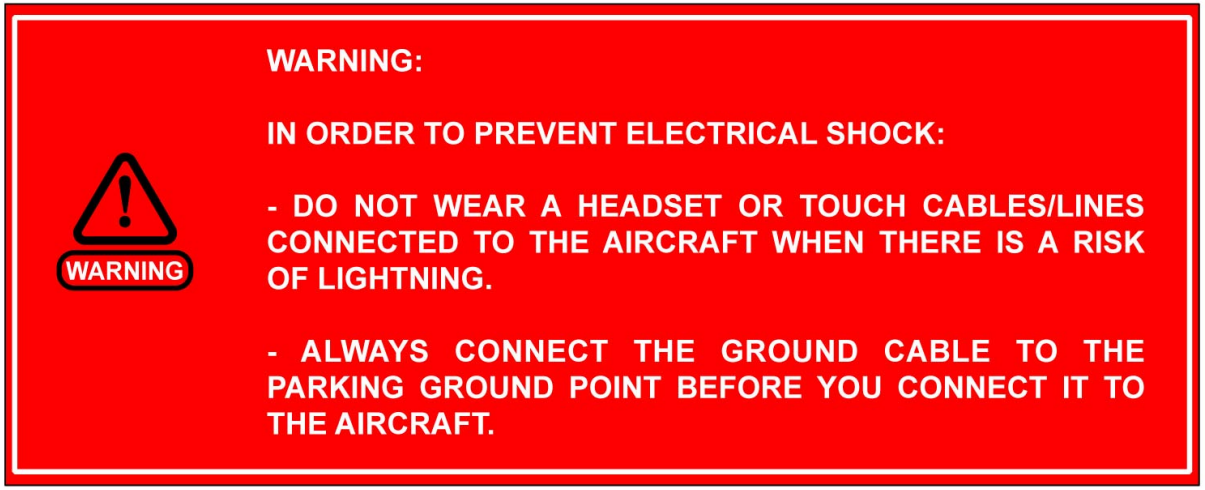

INTRODUCTION & A/C ELECTROSTATIC BALANCING FOR MAINTENANCE OPERATIONS

ELECTRICAL POWER LINE MAINTENANCE BRIEFING (2)

A/C ELECTROSTATIC BALANCING FOR MAINTENANCE OPERATIONS (continued)

GROUNDING

Grounding is recommended for maintenance and servicing operations in the hangar or outside. Connect the ground cable to the grounding points located at the MLG legs or NLG leg. The A/C is now grounded for maintenance operations.

G7508471 - G3NT1T0 - FM24B1000000001

Connection of the grounding cables

Connect the parking or the hangar cable to the aircraft grounding point on one of the MLG legs or on NLG leg.

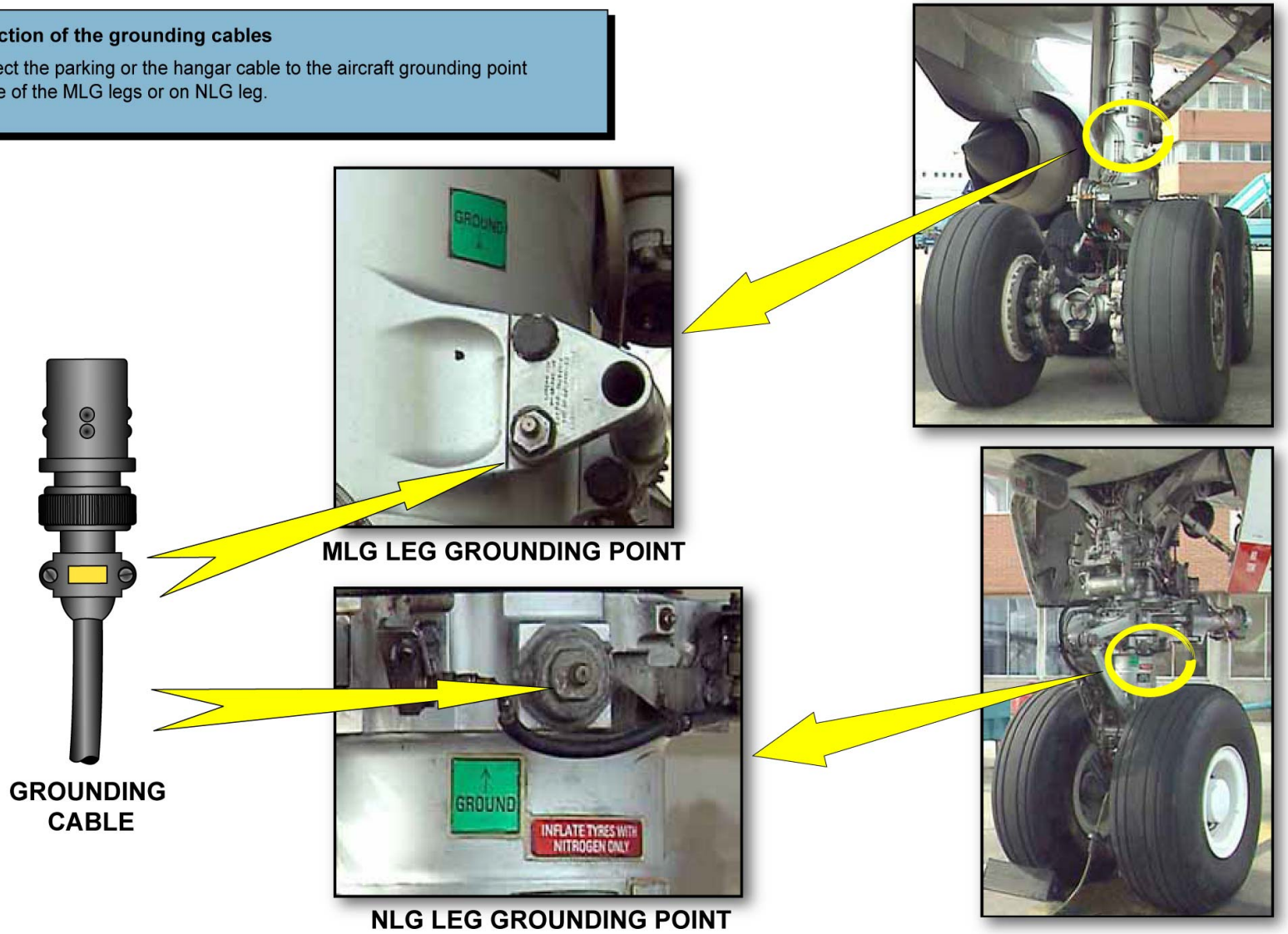

A/C ELECTROSTATIC BALANCING FOR MAINTENANCE OPERATIONS - GROUNDING

ELECTRICAL POWER LINE MAINTENANCE BRIEFING (2)

A/C ELECTROSTATIC BALANCING FOR MAINTENANCE OPERATIONS (continued)

BONDING

To reduce the risk of explosion, bonding is necessary for refuel/defuel and oxygen servicing operations. This bonding supplies an electrostatic balancing between the A/C and the servicing device. Connect the bonding cable to the servicing device (fuel tanker or the oxygen ground filling equipment). Connect the other tip of the bonding cable to the A/C grounding points located on MLG legs, or NLG leg. The A/C is now bonded for servicing.

G7508471 - G3NT1T0 - FM24B1000000001

Connection of the bonding cables

Connect a bonding cable between the fuel tanker or the oxygen ground filling equipment and a grounding point on one of the MLG legs or the NLG leg.

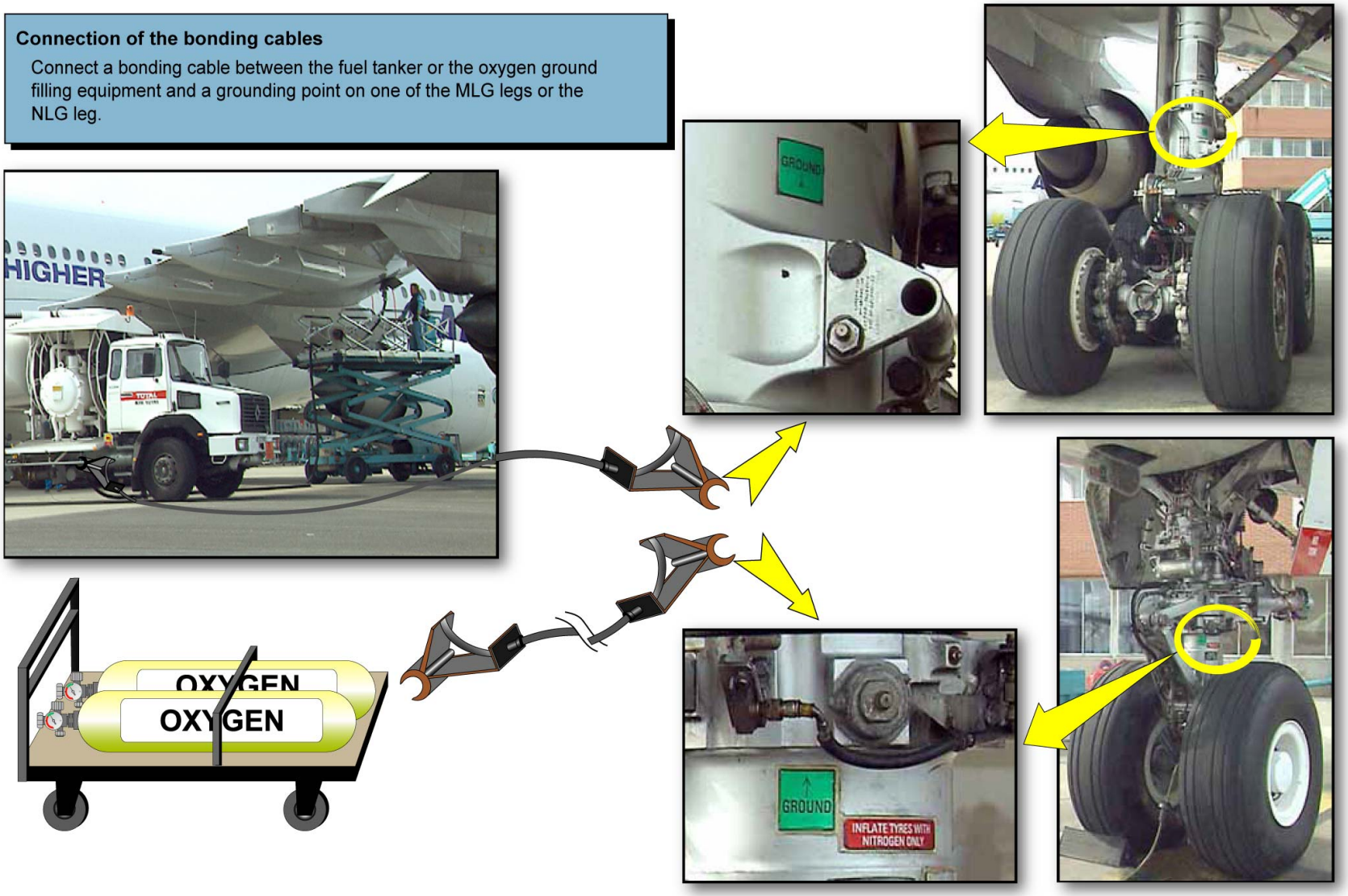

A/C ELECTROSTATIC BALANCING FOR MAINTENANCE OPERATIONS - BONDING

ELECTRICAL POWER LINE MAINTENANCE BRIEFING (2)

IDG OIL SERVICING GENERAL WARNINGS AND CAUTIONS

Follow the AMM instructions; they give the precautions to be taken during the servicing on the IDG.

WARNING: Beware of hot temperature and remaining oil pressure after engine stop.
Use proper safety wear.

CAUTION: IDG with an incorrect servicing can lead to serious damage.
Use approved tooling and approved oil types and brands for servicing and maintenance.
To prevent oil contamination, use solvents (chlorine) and water (rain, fog, wet conditions) with care and use only new oil cans.
A disconnected IDG must be troubleshot prior to any servicing operation.

NOTE: SAFETY PRECAUTION NOTE: Make sure that people cannot start the engines (open, safety and tag the related circuit breakers).
Following the AMM procedures, you can now work safely.

G7508471 - G3NT1T0 - FM24B1000000001

IDG oil servicing general warnings and cautions

WARNING

BEWARE OF HOT TEMPERATURE AND REMAINING OIL PRESSURE AFTER ENGINE STOP.

USE PROPER SAFETY WEAR.

CAUTION

IDG WITH AN INCORRECT SERVICING CAN LEAD TO SERIOUS DAMAGE. USE APPROVED TOOLING AND APPROVED OIL TYPES AND BRANDS FOR SERVICING AND MAINTENANCE.
TO PREVENT OIL CONTAMINATION, USE SOLVENTS (CHLORINE), AND WATER (RAIN, FOG, WET CONDITIONS) WITH CARE AND USE ONLY NEW OIL CANS. A DISCONNECTED IDG MUST BE TROUBLESHOT PRIOR TO ANY SERVICING OPERATION.

SAFETY PRECAUTION NOTE:

MAKE SURE THAT PEOPLE CANNOT START THE ENGINES (OPEN, SAFETY AND TAG THE RELATED CIRCUIT BREAKERS).

IDG OIL SERVICING GENERAL WARNINGS AND CAUTIONS

ELECTRICAL POWER LINE MAINTENANCE BRIEFING (2)

VISUAL INSPECTION OF THE OIL LEVEL

This task describes how to check the IDG oil level.

NOTE: Before doing an IDG oil level inspection, if you replace any of the oil system components (filter, external system component, drain plug), a dry motoring is necessary for an IDG oil leak check.
Before doing an IDG oil level inspection, in order to get maximum filling of the external IDG oil system it is recommended to do:
- 2 minutes engine dry motoring,
- or an engine start at minimum idle thrust as an alternative procedure.

In both cases, wait five minutes to get a stable IDG oil level and then look at the IDG oil level sight-glass.
After an engine dry motoring (cold oil):
- if the oil level is within the green band, oil servicing is not necessary,
- if the oil is below or above the green band, follow the servicing steps.

After an engine start (hot oil):
- if the oil is within the green or yellow band, oil servicing is not necessary,
- if the oil level is below the green band or above the yellow band, follow the servicing steps.

IDG is now serviced.

G7508471 - G3NT1T0 - FM24B100000001

Visual inspection of the oil level.

Check of the oil level:

- Let the oil become stable after engine shutdown.
- Examine the sight-glass to do a check of the IDG oil level.

This procedure is described for training only, use the relevant AMM task as a reference.

Before doing an IDG oil level inspection, if you replace any of the oil system components (filter, external system component, drain plug), a dry motoring is necessary for an IDG oil leak check.

Before doing an IDG oil level inspection, in order to get maximum filling of the external IDG oil system it is recommended to do:
- 2 minutes engine dry motoring,
- or an engine start at minimum idle thrust as an alternative procedure.

To get a stable IDG oil level after an engine dry monitoring or start, wait five minutes.

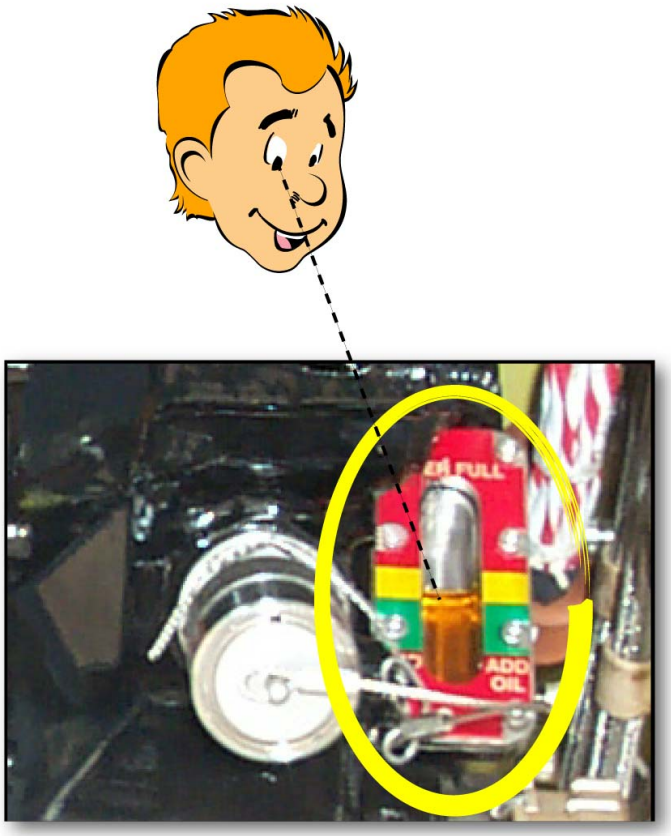

VISUAL INSPECTION OF THE OIL LEVEL

Visual inspection of the oil level.

Check of the oil level:

- ✓ **Inspection with or without dry motoring:**
  - if the oil level is at or near the top of the green band, oil servicing is not necessary,
  - if the oil level is below the green band or above the green band, perform the servicing steps.
- ✓ **Inspection after an engine start:**
  - if the oil level is in the green or yellow band, oil servicing is not necessary,
  - if the oil level is below the green band or above the yellow band, perform the servicing steps.

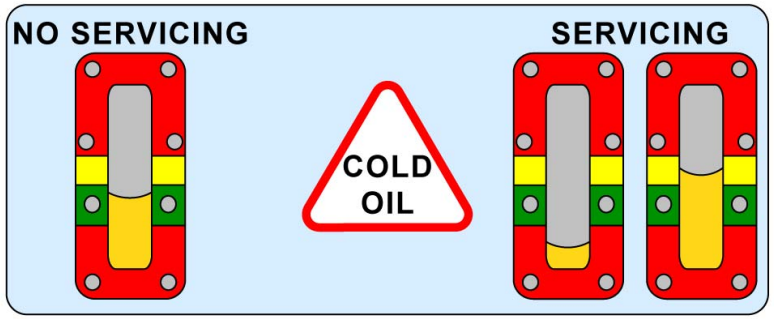

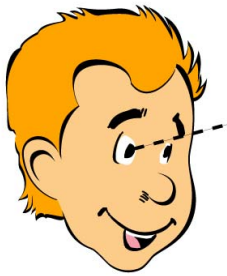

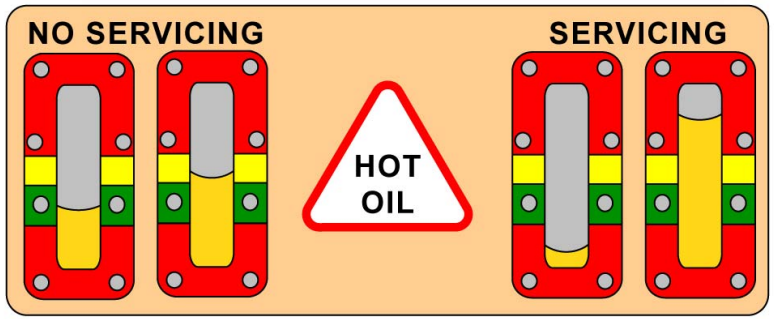

VISUAL INSPECTION OF THE OIL LEVEL

This Page Intentionally Left Blank

G7508471 - G3NT1T0 - FM24B1000000001

ELECTRICAL POWER LINE MAINTENANCE BRIEFING (2)

CHECK OF IDG OIL-FILTER DIFFERENTIAL PRESSURE INDICATOR (DPI)

This task describes the procedure for an inspection of the Differential Pressure Indicator (DPI). Make sure that the red DPI is not extended. You can use a lamp or a mirror for a better inspection. If the red DPI is extended, refer to the Trouble Shooting Manual (TSM). The TSM alternate procedure is used for the reset of the DPI as an alternative to the replacement of the IDG. A maximum of 3 resets is allowed. If after a DPI reset the DPI does not extend again between two scheduled oil/filter changes, the DPI reset status goes back to zero (a maximum of 3 more resets is allowed).

NOTE: 1: At each DPI reset, you must also do the following maintenance actions: replacement of both the oil filter and the IDG oil filter.
2: If metal particles are found in the IDG oil filter, the IDG must be replaced.

G7508471 - G3NT1T0 - FM24B1000000001

Visual inspection of the oil filter DPI:

Make sure that the red button of the DPI is not extended:
-Use an inspection lamp and an inspection mirror, if necessary.

If the red button is extended from the end of the DPI:
-Do the alternate procedure.

This procedure is described for training only,
use the relevant AMM and TSM tasks as a reference.

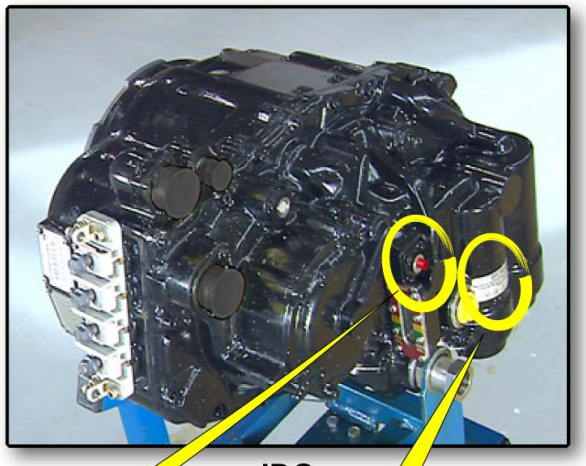

IDG

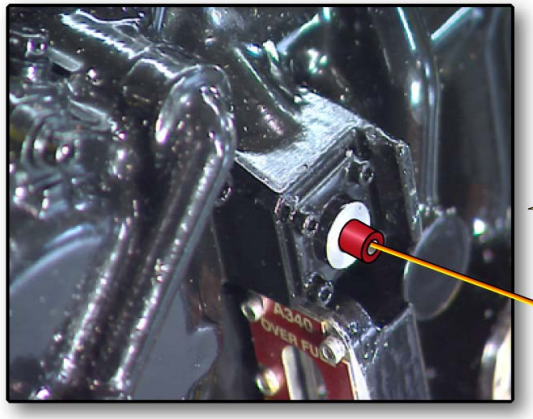

DPI

DPI: Differential Pressure Indicator

DPI RESETS

REFER TO APPROPRIATE DOCUMENTATION FOR DETAILS OF THE ALTERNATE DPI PROCEDURE

1 ✓ 2 3 4 REMOVE IDG

TSM ALTERNATE DPI RESET PROCEDURE

Tick the placard after each DPI reset

CHECK OF IDG OIL-FILTER DIFFERENTIAL PRESSURE INDICATOR (DPI)

ELECTRICAL POWER LINE MAINTENANCE BRIEFING (2)

IDG SERVICING - FILLING OF THE IDG WITH OIL OR ADDITION OF OIL AFTER A LEVEL CHECK

IDG oil servicing is necessary if:
- an IDG oil level at the sight glass is not correct,
- an "IDG low oil level" message is generated by the Central Maintenance System (CMS),
- an IDG is replaced,
- an IDG is drained,
- an IDG oil filter is replaced,
- an IDG oil cooling system component is replaced.

Do not discharge products such as oil, fuel, solvent, lubricant either in trash bins, soil or into the water network (drains, gutters, rain water, waste water, etc...). Each product must be stored in an appropriate and specific cabinet or room such as a fire-resistant and sealed cupboard.

G7508471 - G3NT1T0 - FM24B1000000001

IDG servicing - Filling of the IDG with oil or addition of oil after a level check:

- Depressurize the IDG case,
- Filling of the IDG with oil,
- Removal of the hoses,
- IDG oil level inspection.

This procedure is described for training only, use the relevant AMM task as a reference.

USE APPROPRIATE STORAGE EQUIPMENT FOR CHEMICAL PRODUCTS

IDG SERVICING - FILLING OF THE IDG WITH OIL OR ADDITION OF OIL AFTER A LEVEL CHECK

ELECTRICAL POWER LINE MAINTENANCE BRIEFING (2)

IDG SERVICING - FILLING OF THE IDG WITH OIL OR ADDITION OF OIL AFTER A LEVEL CHECK (continued)

DEPRESSURIZE THE IDG CASE

CAUTION: Hard metal objects such as screwdrivers can cause damage to the overflow drain valve seat.

Put the end of the overflow drain hose fitting in a container. Then connect the overflow drain hose fitting to the overflow drain valve.

NOTE: Some oil can come out of the overflow drain hose fitting when you connect it.

G7508471 - G3NT1T0 - FM24B1000000001

Depressurize the IDG case:

- Put the end of the overflow drain hose fitting in a container.

- To depressurized the IDG case, connect the overflow drain hose fitting to the overflow drain valve.

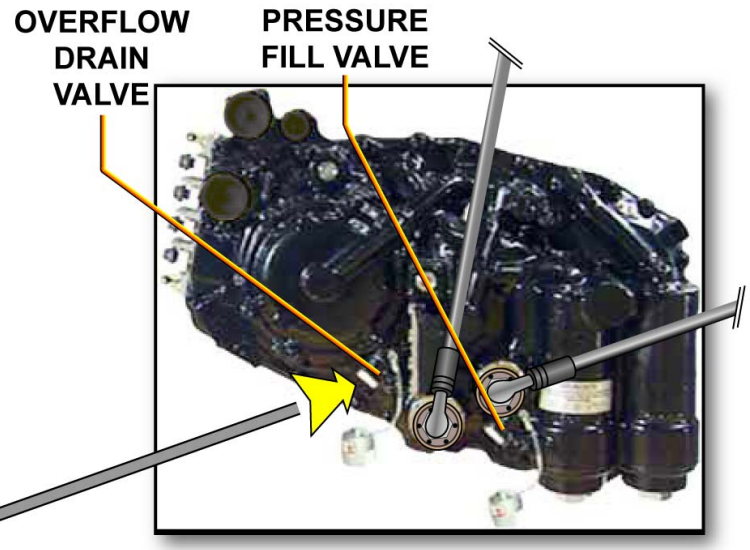

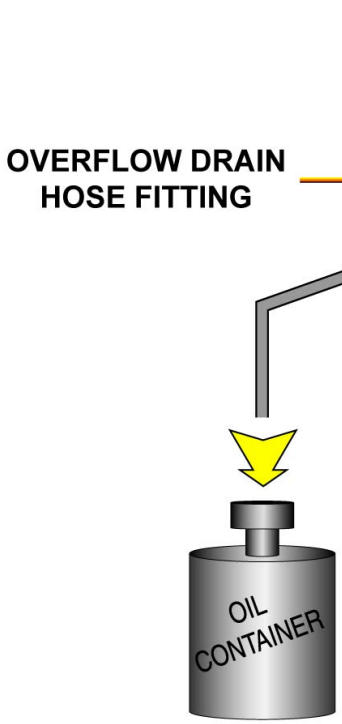

Some oil can come out of the overflow drain hose fitting.

IDG SERVICING - FILLING OF THE IDG WITH OIL OR ADDITION OF OIL AFTER A LEVEL CHECK - DEPRESSURIZE THE IDG CASE

ELECTRICAL POWER LINE MAINTENANCE BRIEFING (2)

IDG SERVICING - FILLING OF THE IDG WITH OIL OR ADDITION OF OIL AFTER A LEVEL CHECK (continued)

FILLING OF THE IDG WITH OIL

Connect the pressure fill hose fitting to the pressure fill valve. Fill the IDG with filtered oil and respect maximum filling pressure.
Stop the filling procedure when the quantity of oil collected from the overflow drain hose is above the minimum required.

G7508471 - G3NT1T0 - FM24B1000000001

Filling of the IDG with oil:

- Connect the pressure fill hose fitting to the pressure fill valve.
- Fill the IDG with filtered oil and respect maximum filling pressure.

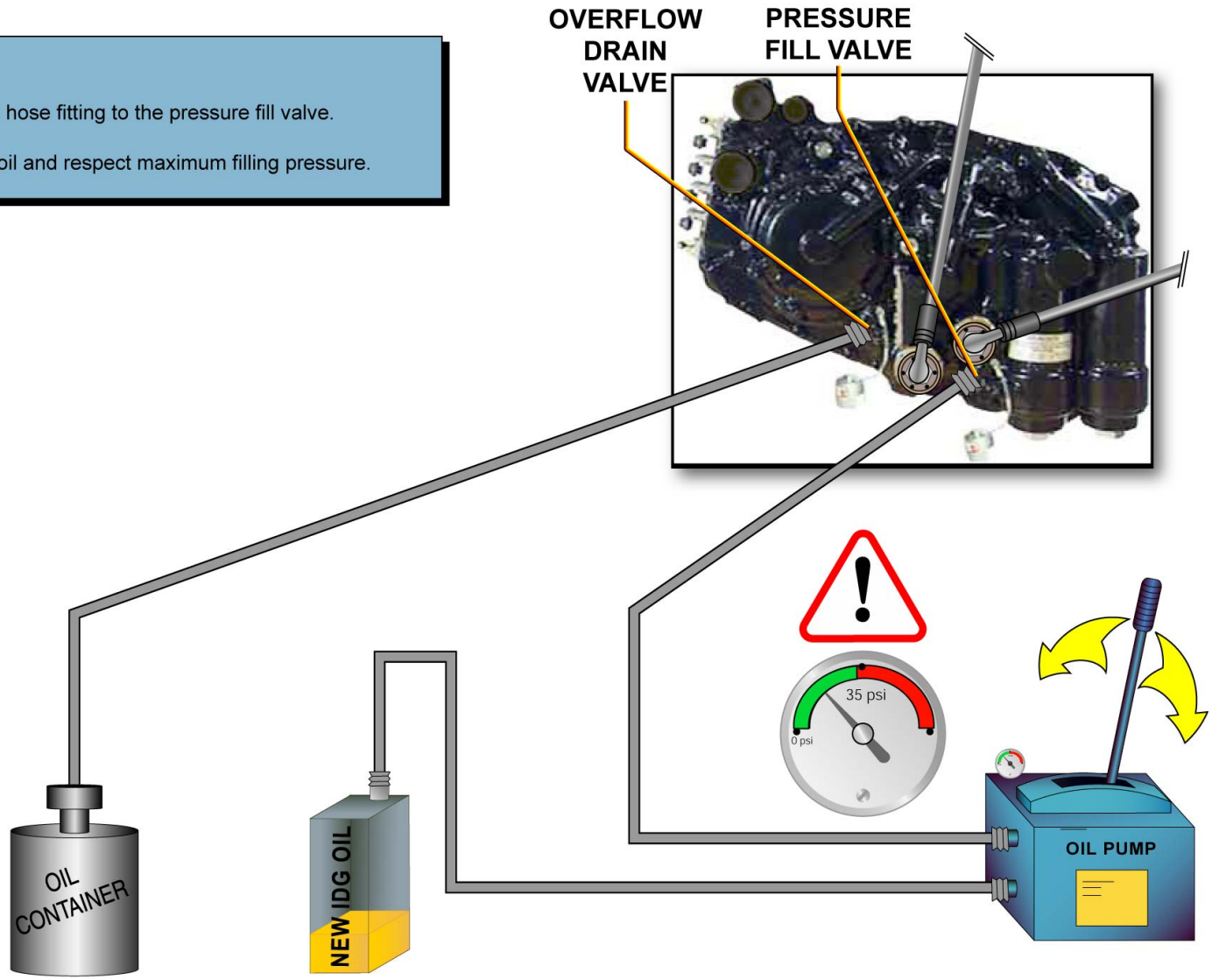

IDG SERVICING - FILLING OF THE IDG WITH OIL OR ADDITION OF OIL AFTER A LEVEL CHECK - FILLING OF THE IDG WITH OIL

Filling of the IDG with oil:

- Stop the filling procedure when the quantity of oil collected is sufficient.

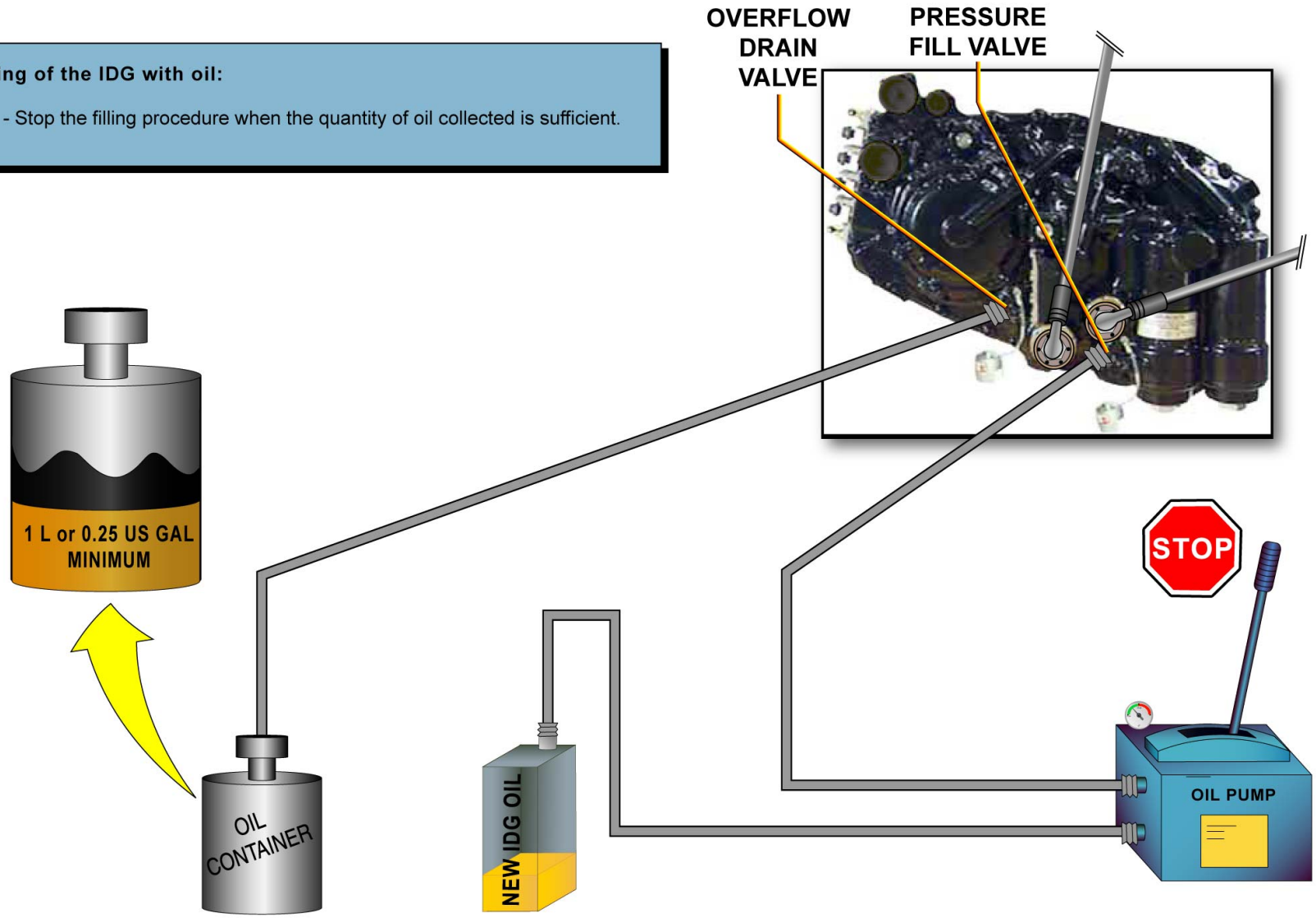

IDG SERVICING - FILLING OF THE IDG WITH OIL OR ADDITION OF OIL AFTER A LEVEL CHECK - FILLING OF THE IDG WITH OIL

This Page Intentionally Left Blank

G7508471 - G3NT1T0 - FM24B1000000001

ELECTRICAL POWER LINE MAINTENANCE BRIEFING (2)

IDG SERVICING - FILLING OF THE IDG WITH OIL OR ADDITION OF OIL AFTER A LEVEL CHECK (continued)

REMOVAL OF THE HOSES

Disconnect the pressure fill hose from the pressure fill valve. When only drops of oil come out of the overflow drain hose, disconnect it. Do not forget to install the dust caps back on their related valves.

G7508471 - G3NT1T0 - FM24B1000000001

Removal of the hoses:

- Disconnect the pressure fill hose.
- When only drops of oil come out of the overflow drain hose, remove the hose.
- Install the dust caps of the pressure fill valve and the overflow drain valve.

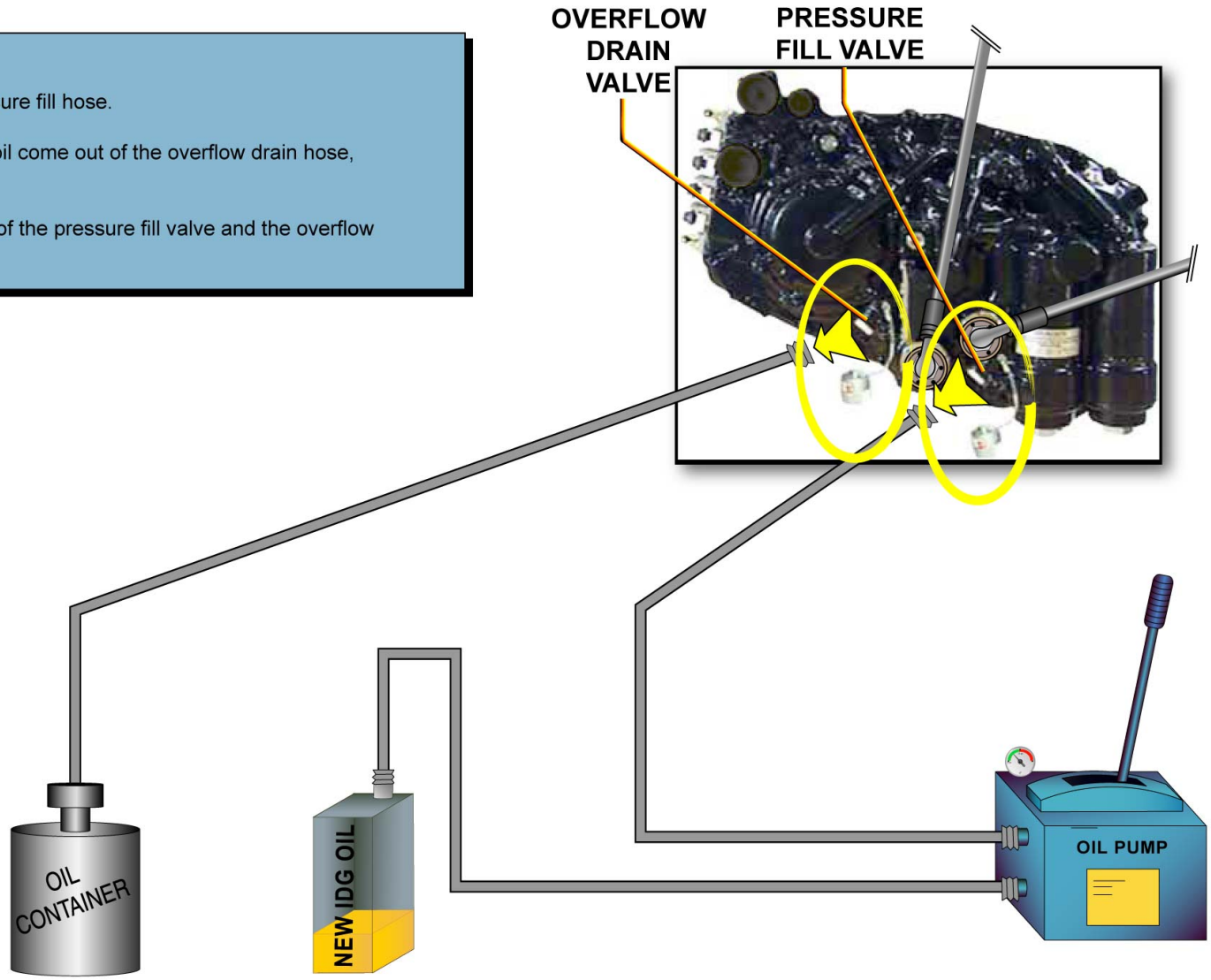

IDG SERVICING - FILLING OF THE IDG WITH OIL OR ADDITION OF OIL AFTER A LEVEL CHECK - REMOVAL OF THE HOSES

G7508471 - G3NT1T0 - FM24B1000000001

ELECTRICAL POWER LINE MAINTENANCE BRIEFING (2)

IDG SERVICING - FILLING OF THE IDG WITH OIL OR ADDITION OF OIL AFTER A LEVEL CHECK (continued)

IDG OIL LEVEL INSPECTION

At the end of the IDG servicing procedure, you must do an inspection of the IDG oil level, and do a reset of the oil level sensor by an action on the cockpit on the related GENerator P/BSW. Now, the IDG has a correct oil level.
Example of IDG servicing film.

G7508471 - G3NT1T0 - FM24B1000000001

IDG oil level visual inspection

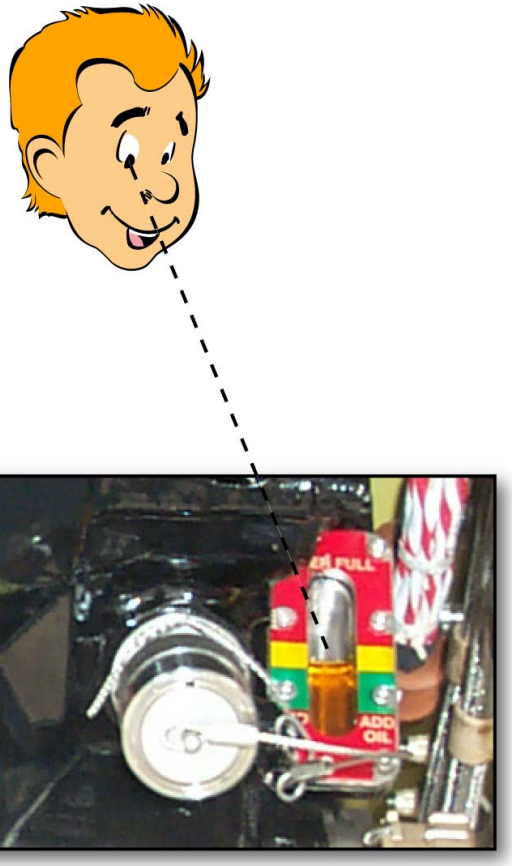

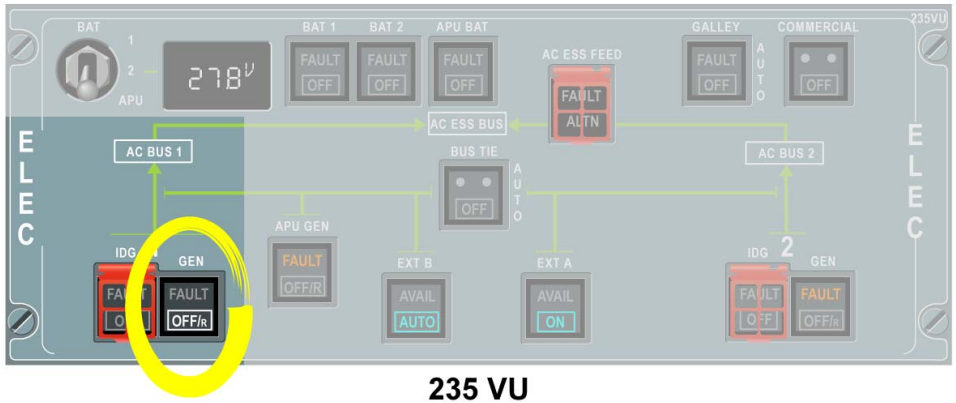

235 VU

IDG SERVICING - FILLING OF THE IDG WITH OIL OR ADDITION OF OIL AFTER A LEVEL CHECK - IDG OIL LEVEL INSPECTION

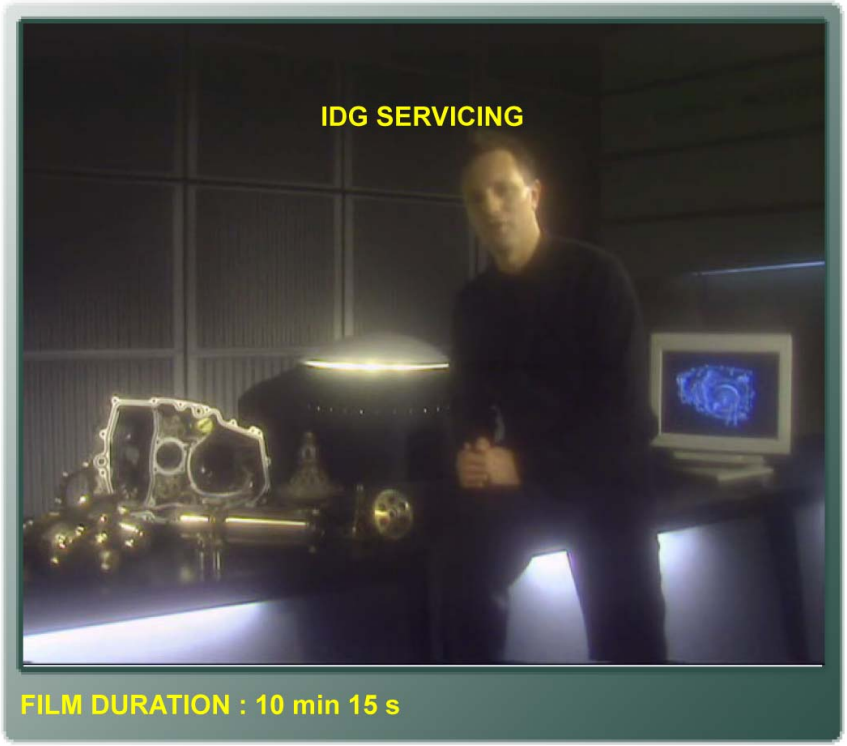

IDG SERVICING - FILLING OF THE IDG WITH OIL OR ADDITION OF OIL AFTER A LEVEL CHECK - IDG OIL LEVEL INSPECTION

G7508471 - G3NT1T0 - FM24B1000000001

This Page Intentionally Left Blank

G7508471 - G3NT1T0 - FM24B1000000001

ELECTRICAL POWER LINE MAINTENANCE BRIEFING (2)

OPERATIONAL TEST OF THE IDG DISCONNECT AND RECONNECT FUNCTION

The IDG will be disconnected in case of:
- oil overheat (high oil out temperature),
- oil pressure drop when not caused by drive under speed.

The amber fault legend of the ELECtrical/IDG P/BSWs comes on, and the master caution is triggered. In this case, the related IDG should be manually disconnected. For this, push to disconnect the IDG safety guarded P/BSW installed on the panel 235 VU.

CAUTION: ENGAGE THE IDG DISCONNECT MECHANISM WITH THE DISCONNECT RESET RING BEFORE YOU START THE ENGINE. IF NOT, YOU WILL CAUSE DAMAGE TO THE GEAR TEETH, AT ENGINE START.
YOU CAN DAMAGE THE DISCONNECT SOLENOID BECAUSE OF OVERHEATING IF: YOU PUSH THE IDG DISCONNECT P/BSW FOR MORE THAN 3 SECONDS. THERE MUST BE AT LEAST 60 SECONDS BETWEEN 2 OPERATIONS OF THE SWITCH.

On the ELEC control panel, push the related IDG P/BSW.
On the IDG slowly pull out the disconnect reset ring to the full limit of travel. If you feel a click while you hold the disconnect reset ring, this shows that the disconnect function operates correctly. Let the disconnect reset ring go slowly back to the initial position.

NOTE: The IDG disconnection is irreversible in flight. Reconnection of the system is then possible only on the ground with engines shut down.
There are two different AMM tasks for the operational test of the IDG disconnect and reconnect (reset) function, depending on whether the engine is stopped or in operation.

The procedure is identical on the A330.

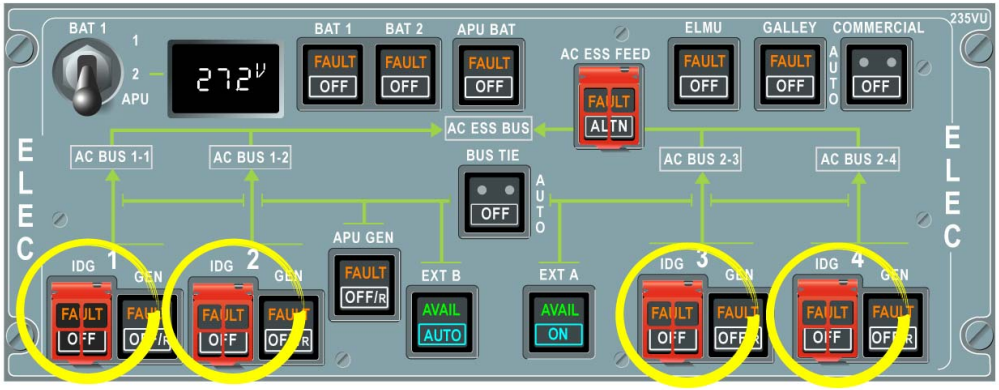

A340 ELECTRICAL CONTROL PANEL

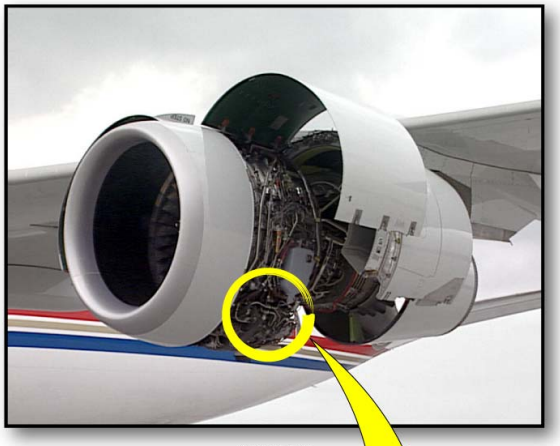

CFM56

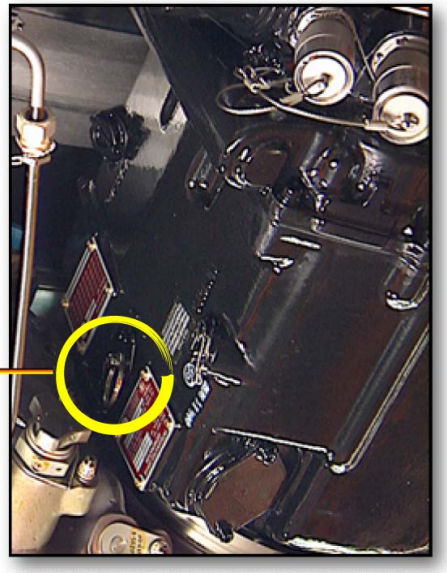

INTEGRATED DRIVE GENERATOR (IDG)

CAUTION

ENGAGE THE IDG DISCONNECT MECHANISM WITH THE DISCONNECT RESET RING BEFORE YOU START THE ENGINE. IF NOT, YOU WILL CAUSE DAMAGE TO THE GEAR TEETH, AT ENGINE START.

CAUTION

YOU CAN DAMAGE THE DISCONNECT SOLENOID BECAUSE OF OVERHEATING IF:
YOU PUSH THE IDG DISCONNECT P/BSW FOR MORE THAN 3 SECONDS.
THERE MUST BE AT LEAST 60 SECONDS BETWEEN 2 OPERATIONS OF THE SWITCH.

This procedure is described for training only, use the relevant AMM task as a reference.

OPERATIONAL TEST OF THE IDG DISCONNECT AND RECONNECT FUNCTION

G7508471 - G3NT1T0 - FM24B100000001

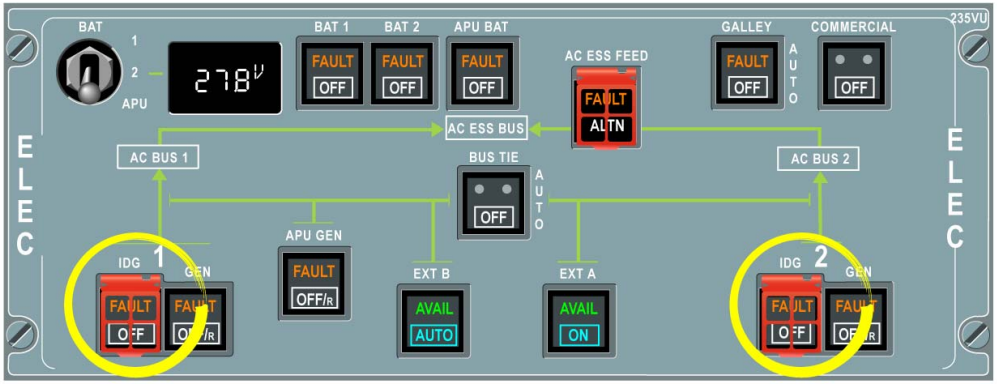

A330 ELECTRICAL CONTROL PANEL

CAUTION

ENGAGE THE IDG DISCONNECT MECHANISM WITH THE DISCONNECT RESET RING BEFORE YOU START THE ENGINE. IF NOT, YOU WILL CAUSE DAMAGE TO THE GEAR TEETH, AT ENGINE START.

CAUTION

YOU CAN DAMAGE THE DISCONNECT SOLENOID BECAUSE OF OVERHEATING IF:
YOU PUSH THE IDG DISCONNECT P/BSW FOR MORE THAN 3 SECONDS.
THERE MUST BE AT LEAST 60 SECONDS BETWEEN 2 OPERATIONS OF THE SWITCH.

This procedure is described for training only, use the relevant AMM task as a reference.

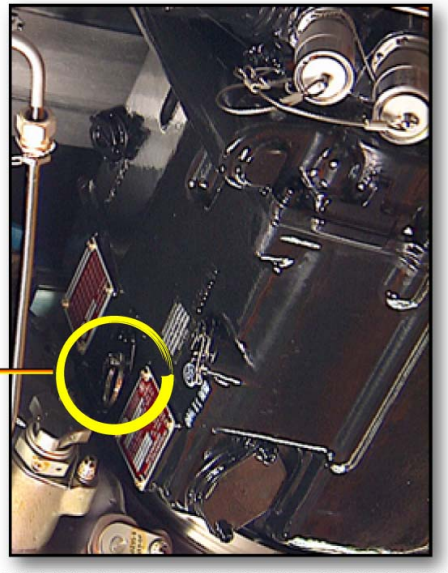

INTEGRATED DRIVE GENERATOR (IDG)

OPERATIONAL TEST OF THE IDG DISCONNECT AND RECONNECT FUNCTION

G7508471 - G3NT1T0 - FM24B100000001

This Page Intentionally Left Blank

G7508471 - G3NT1T0 - FM24B1000000001

ELECTRICAL POWER LINE MAINTENANCE BRIEFING (2)

COLD WEATHER MAINTENANCE FOR BATTERIES

This procedure gives the maintenance practices for the batteries when the A/C is in cold soak configuration.

GENERAL

In very low temperatures, the chemical reaction of the electrolyte is slower and the performance of the batteries decreases:
- the high current supply from the batteries decreases,
- the necessary time to charge the batteries increases.

This procedure gives instructions that keep the batteries serviceable.

NOTE: The values specified in this procedure are only applicable if the A/C doors remain closed during the cold soak.

G7508471 - G3NT1T0 - FM24B1000000001

Cold weather maintenance for batteries

In very low temperatures, the chemical reaction of the electrolyte is slower and the performance of the batteries decreases:

- the high current supply from the batteries decreases,

- the necessary time to charge the batteries increases.

This procedure is described for training only, use the relevant AMM task as a reference.

The values specified in this procedure are only applicable if the aircraft doors remain closed during the cold soak.

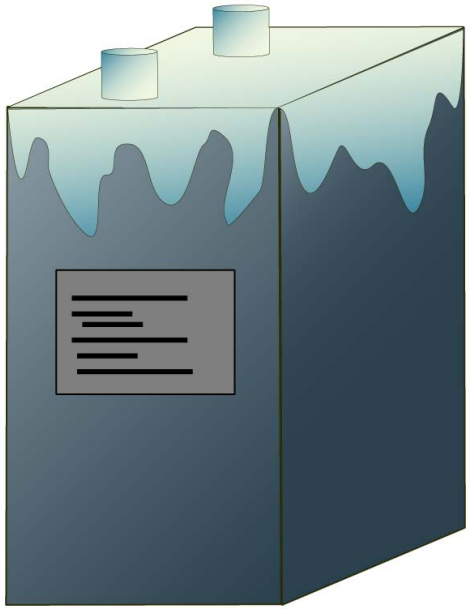

COLD WEATHER MAINTENANCE FOR BATTERIES - GENERAL

ELECTRICAL POWER LINE MAINTENANCE BRIEFING (2)

COLD WEATHER MAINTENANCE FOR BATTERIES (continued)

BATTERY COLD WEATHER MAINTENANCE PRACTICES

The batteries can stay on the A/C if:
- the Outside Air Temperature (OAT) stays higher than -15 °C (+5.00 °F),
- the OAT is approximately -15 °C (+5.00 °F) for not more than 12 hours,
- the OAT is between -15 °C (+5.00 °F) and -30 °C (-22.00 °F) for not more than 6 hours.

You must remove the 3 batteries if the OAT is lower than -30 °C (-22.00 °F).
You must respect the temperature limit, otherwise you can decrease the life of batteries, or you can damage them.

NOTE: We recommend that you use a Ground Power Unit (GPU) to start the APU if the OAT was lower than -15 °C (+5.00 °F).

G7508471 - G3NT1T0 - FM24B1000000001

Cold weather maintenance for batteries

Batteries cold weather maintenance practices

The batteries can stay on the aircraft during the cold soak if:
- the Outside Air Temperature (OAT) stays higher than -15 °C (+5.00 °F),
- the OAT is approximately -15 °C (+5.00 °F) for not more than 12 hours,
- the OAT is between -15 °C (+5.00 °F) and -30 °C (-22.00 °F) for not more than 6 hours.

If the OAT is lower than -30 °C (-22.00 °F), remove the 3 batteries.

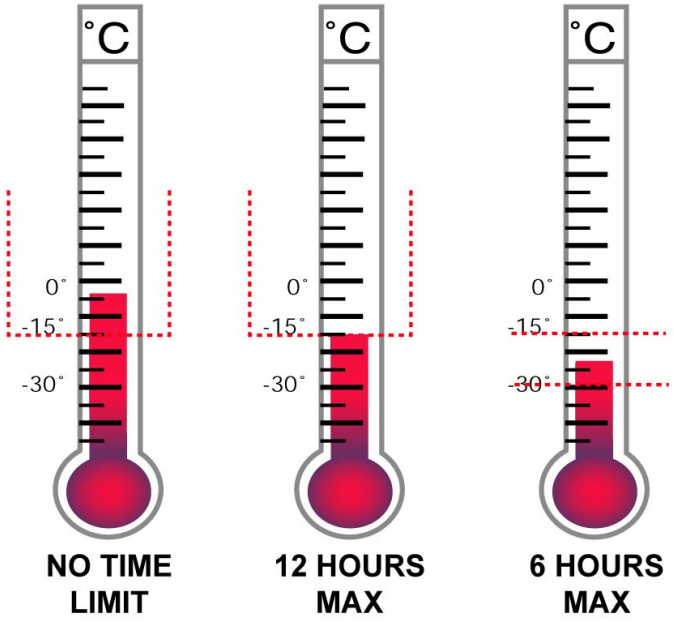

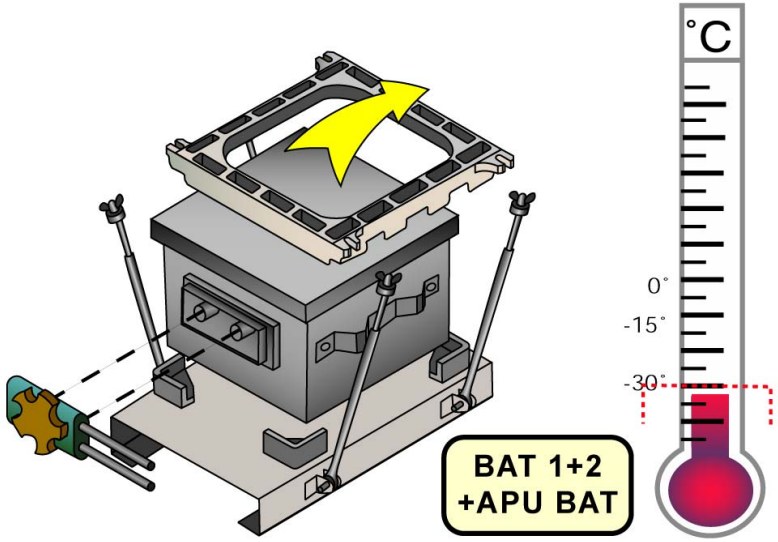

COLD WEATHER MAINTENANCE FOR BATTERIES - BATTERY COLD WEATHER MAINTENANCE PRACTICES

Cold weather maintenance for batteries

GROUND POWER UNIT (GPU)

We recommend that you use a GPU to start the APU if the OAT was lower than -15 deg.C (+5.00 deg.F) during the cold soak.

COLD WEATHER MAINTENANCE FOR BATTERIES - BATTERY COLD WEATHER MAINTENANCE PRACTICES

This Page Intentionally Left Blank

G7508471 - G3NT1T0 - FM24B1000000001

ELECTRICAL SYSTEM GENERAL DESCRIPTION (3)

ELECTRICAL GENERATION

The electrical power system provides Alternating Current (AC) and Direct Current (DC) to power the aircraft electrical network.
The AC main power sources are:
- two Integrated Drive Generators (IDGs),
- Auxiliary Power Unit (APU) GENerator,
- the two external power sources A and B.

The AC emergency power sources are:
- the EMERgency GENerator,
- and the STATic INVerter supplied by the aircraft batteries. The DC main power sources are three Transformers Rectifiers (TRs) supplied by the AC system. The DC emergency power sources are the two aircraft BATteries. A third battery, the APU BATtery, associated with the APU TR, is only used in starting the APU.

G7508471 - G3NT1T0 - FM24DC000000002

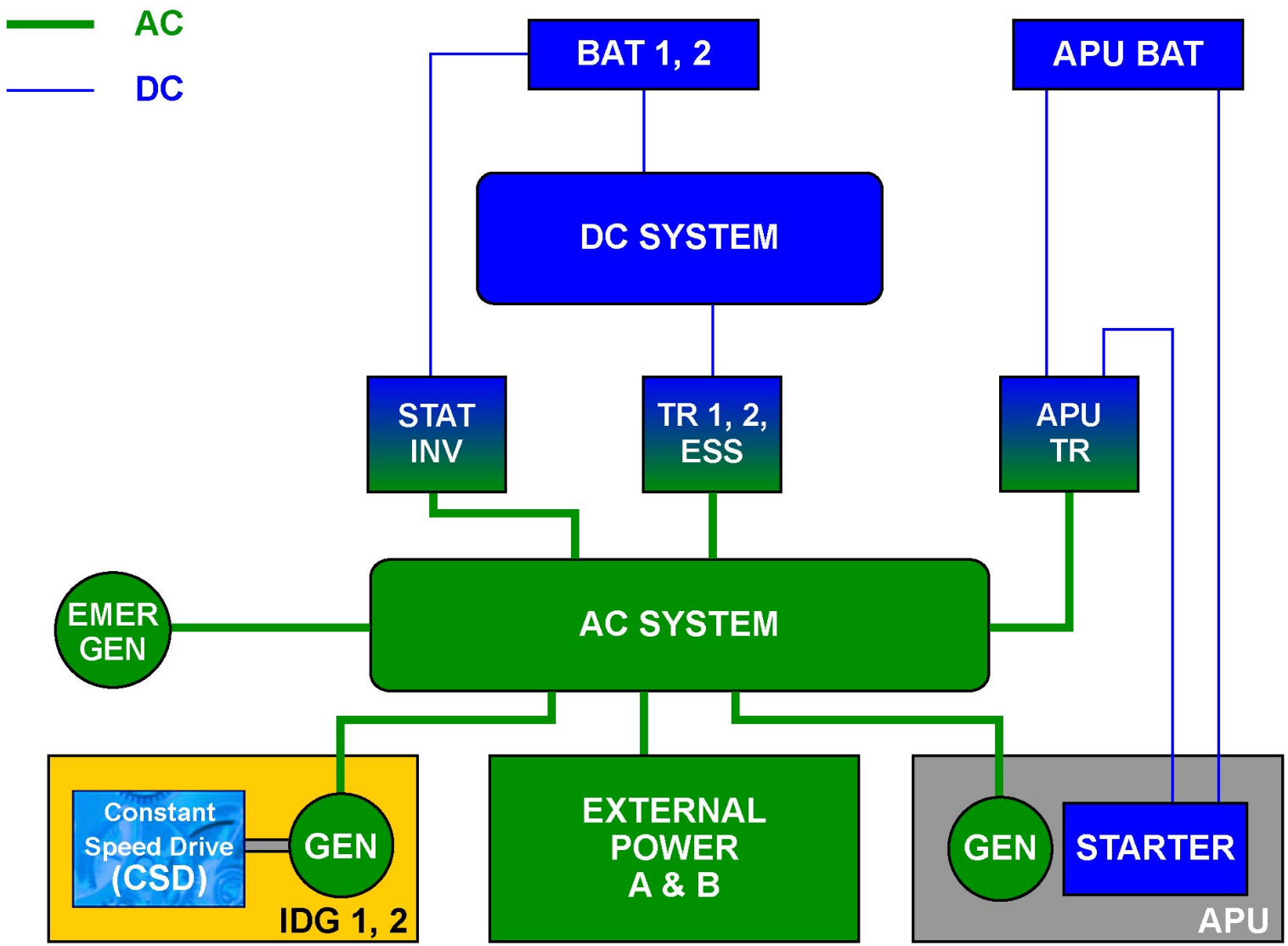

ELECTRICAL GENERATION

G7508471 - G3NT1T0 - FM24DC000000002

ELECTRICAL SYSTEM GENERAL DESCRIPTION (3)

AC MAIN GENERATION

The main generators (IDGs) supply the electrical network through a Generator Line Contactor (GLC). The APU generator can supply the electrical network through an APU Generator Line Contactor (APU GLC). Each external power can supply the electrical network through an External Power Contactor (EPC).

AC TRANSFER

The AC transfer circuit comprises two Bus Tie Contactors (BTCs) and a System Isolation Contactor (SIC). These contactors operate automatically in order to supply the main busbars in different configurations depending on the AC sources available.

AC EMERGENCY GENERATION

The EMERgency GENerator, also called Constant Speed Motor/Generator (CSM/G) is used in emergency electrical configuration; when the main AC BUSES are lost. The CSM/G can supply the electrical network through an EMERgency Generator Line Contactor (EMER GLC). The CSM/G is a hydraulic-driven generator supplied by the green hydraulic system. The STAT INV is supplied from the aircraft batteries 1 and 2, and automatically supplies the AC ESSential BUS if no other AC sources or EMER GEN are available.

AC ESSENTIAL SUPPLY

In normal configuration, the AC ESS BUS is supplied from AC BUS 1. If AC BUS 1 fails, there is an automatic switching of the supply to AC BUS 2. The AC ESS BUS switching can also be performed manually in the flight deck. Other sources of supply for the AC ESS BUS are the EMER GEN, or the STAT INV.

G7508471 - G3NT1T0 - FM24DC000000002

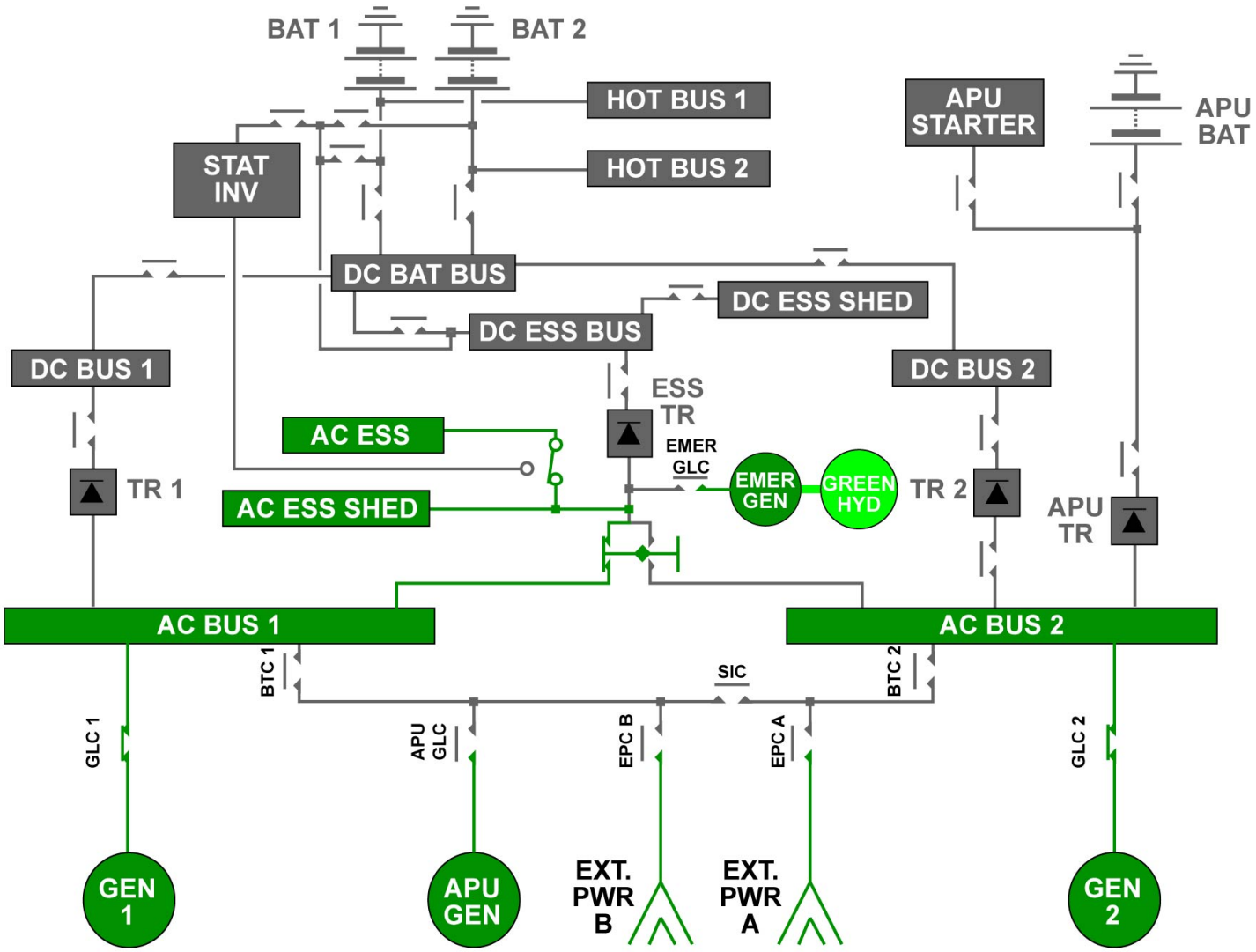

AC MAIN GENERATION - AC TRANSFER ... AC ESSENTIAL SUPPLY

G7508471 - G3NT1T0 - FM24DC00000002

ELECTRICAL SYSTEM GENERAL DESCRIPTION (3)

AC MAIN GENERATION (continued)

AC GENERATION PROPERTIES

This table gives the properties of the different AC power sources.
Note that the static inverter is a single phase power source.

G7508471 - G3NT1T0 - FM24DC000000002

	POWER	VOLTAGE	FREQUENCY	PHASES
IDG	115 KVA	115 V	400 Hz	3
APU GENERATOR	115 KVA	115 V	400 Hz	3
EXTERNAL POWER	90 KVA	115 V	400 Hz	3
CSM/G	8 KVA	115 V	400 Hz	3
STATIC INVERTER	2.5 KVA	115 V	400 Hz	1

AC MAIN GENERATION - AC GENERATION PROPERTIES

G7508471 - G3NT1T0 - FM24DC000000002

ELECTRICAL SYSTEM GENERAL DESCRIPTION (3)

DC MAIN GENERATION

The DC main system is composed of 4 buses:
- DC BUS 1 supplied from AC BUS 1 via TR 1,
- DC BUS 2 supplied from AC BUS via TR 2,
- the DC BAT BUS is normally supplied from DC BUS 1. The DC BAT BUS can also be supplied from DC BUS 2 in certain failure configurations.
- Name the dc essential bus because you are talking of 4 buses.

DC ESSENTIAL SUPPLY

The DC ESS BUS is normally supplied by ESS TR from AC BUS 1,or AC BUS 2 with the loss of AC BUS 1.

BAT 1, 2 AND APU BAT

With the loss of all AC power sources including the EMER GEN, BAT 1 and 2 supply the DC ESS BUS. The aircraft BAT HOT BUSES are always supplied from the batteries. The APU BAT is used to start the APU.

G7508471 - G3NT1T0 - FM24DC000000002

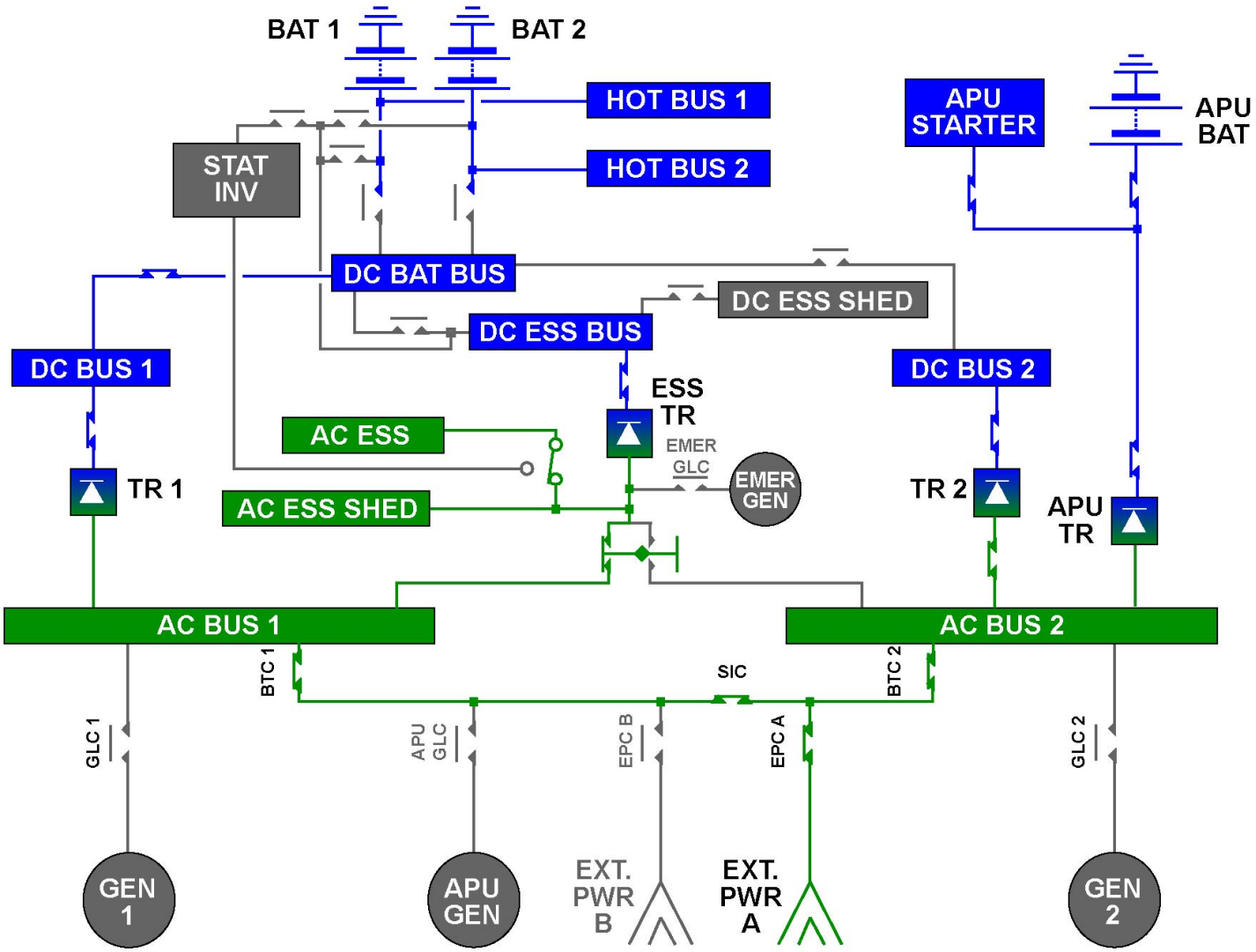

DC MAIN GENERATION - DC ESSENTIAL SUPPLY & BAT 1, 2 AND APU BAT

G7508471 - G3NT1T0 - FM24DC00000002

ELECTRICAL SYSTEM GENERAL DESCRIPTION (3)

DC MAIN GENERATION (continued)

SERVICE BUSES

In order to not supply the entire aircraft electrical network and still perform servicing of the aircraft (Cabin cleaning, cargo loading...) only limited items of the aircraft can be supplied, from the AC and the DC SERVICE BUSES. This ground service supply is performed via a direct connection from EXT PWR A only. The MAINTenance BUS switch (in the cabin forward entry area - C/B panel 5001VE) must be selected ON and EXT PWR A available, in order to supply the service buses.

G7508471 - G3NT1T0 - FM24DC000000002

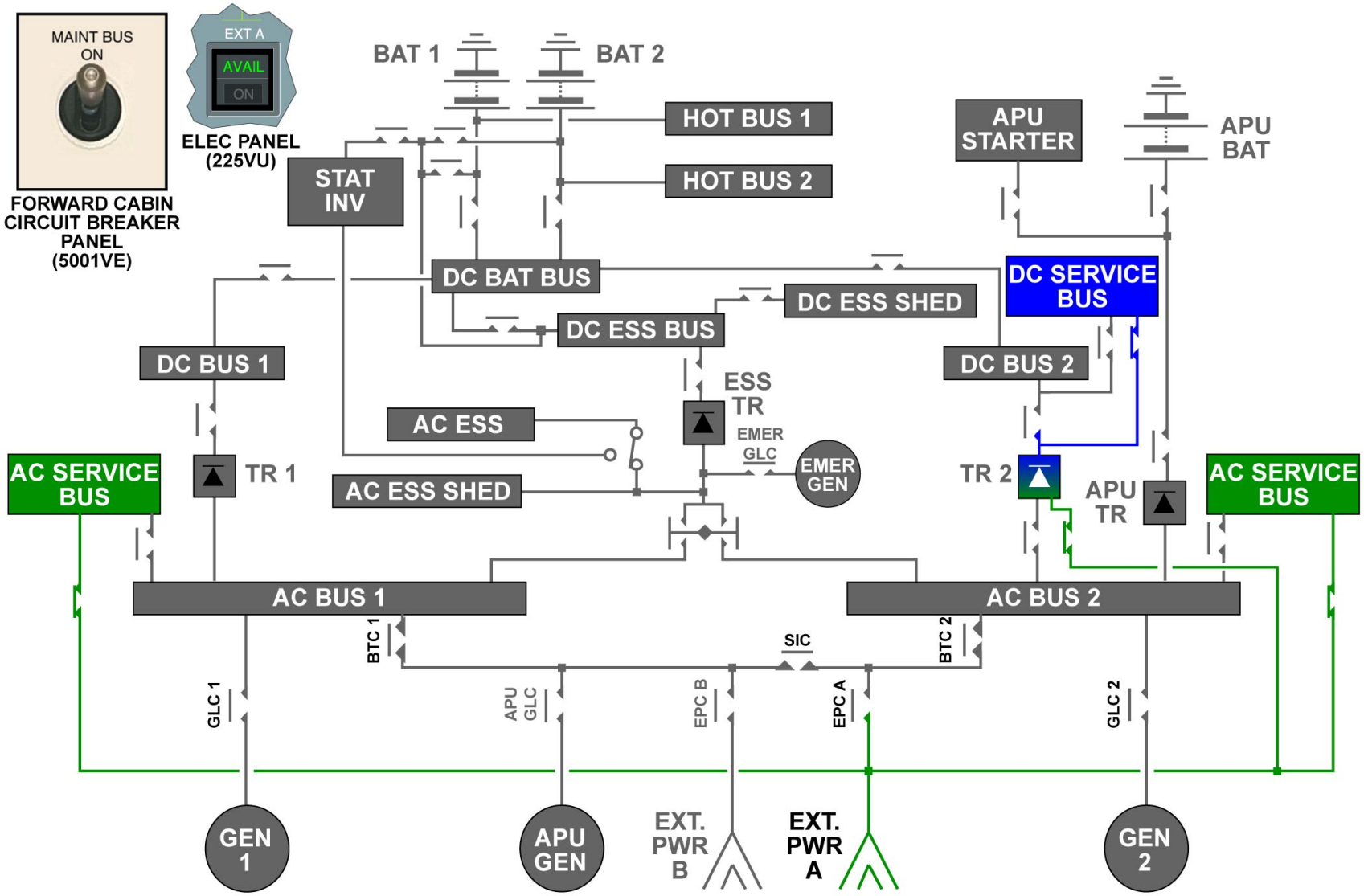

DC MAIN GENERATION - SERVICE BUSES

G7508471 - G3NT1T0 - FM24DC00000002

ELECTRICAL SYSTEM GENERAL DESCRIPTION (3)

NORMAL CONFIGURATION

This figure shows a normal configuration on ground, with EXT PWR A only. The BTCs and the SIC operate automatically. If EXT PWR B is made available and selected ON, the SIC would automatically open and allow EXT PWR B to supply the left side of the network.

G7508471 - G3NT1T0 - FM24DC000000002

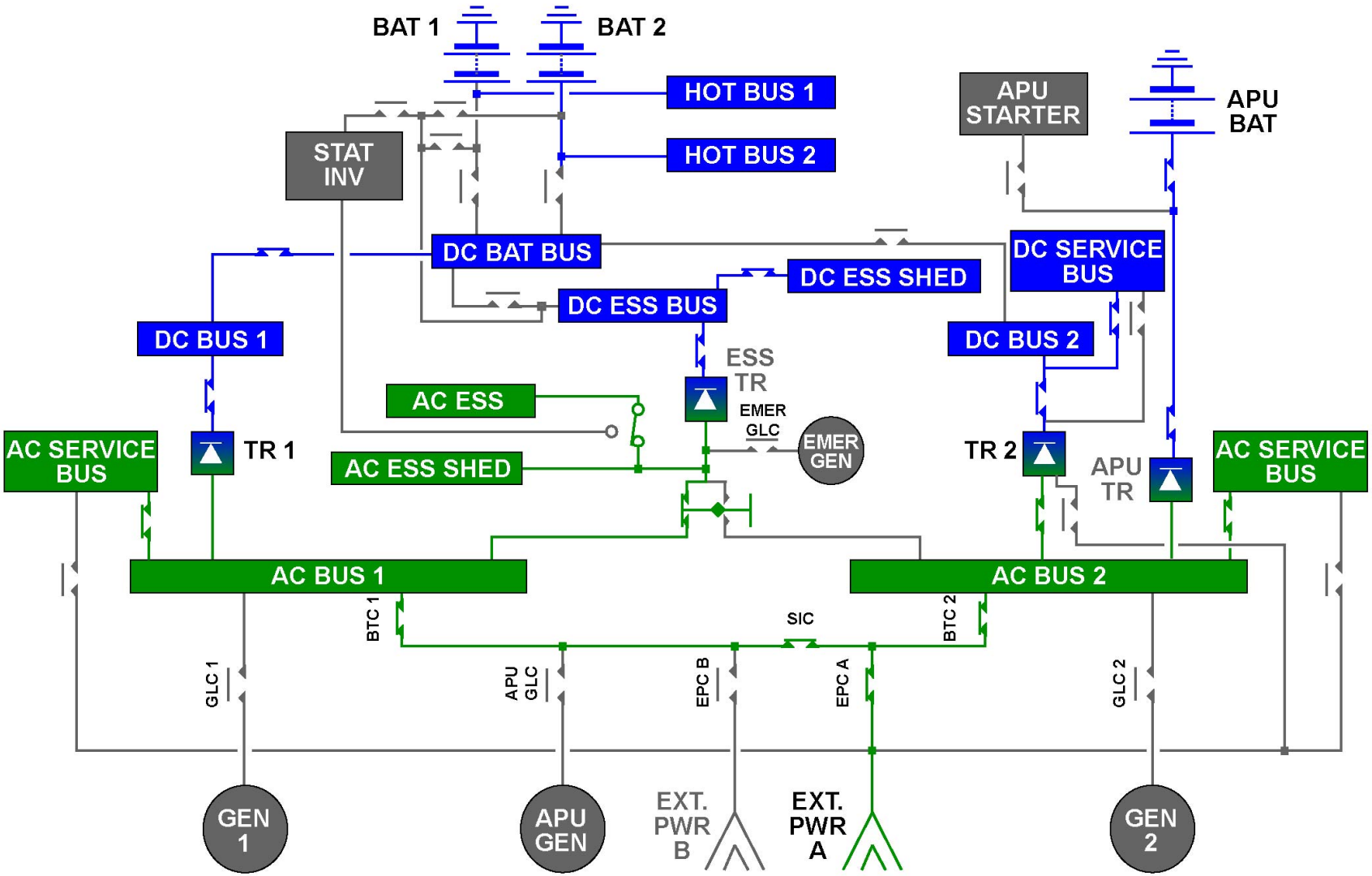

NORMAL CONFIGURATION

G7508471 - G3NT1T0 - FM24DC00000002

ELECTRICAL SYSTEM GENERAL DESCRIPTION (3)

NBPT FUNCTION

When the APU is started and the APU GEN is available, the APU GEN will automatically take over the supply of the LH side of the network. Here, the APU GEN supplies the left side (priority over the EXT PWR B) while EXT PWR A supplies the RH side. Note that, on ground only, during AC power source transfers, the AC power sources are momentarily connected in parallel for a short period of time. This function is called No Break Power Transfer (NBPT). The NBPT operates only on ground, and during start and shutdown of the engine generators, APU GEN and EXT PWR. The NBPT function prevents power transients on the aircraft electrical network when switching AC power sources on the ground. The NBPT function and operation is fully explained in the "CONTACTOR MANAGEMENT DESCRIPTION and OPERATION" module.

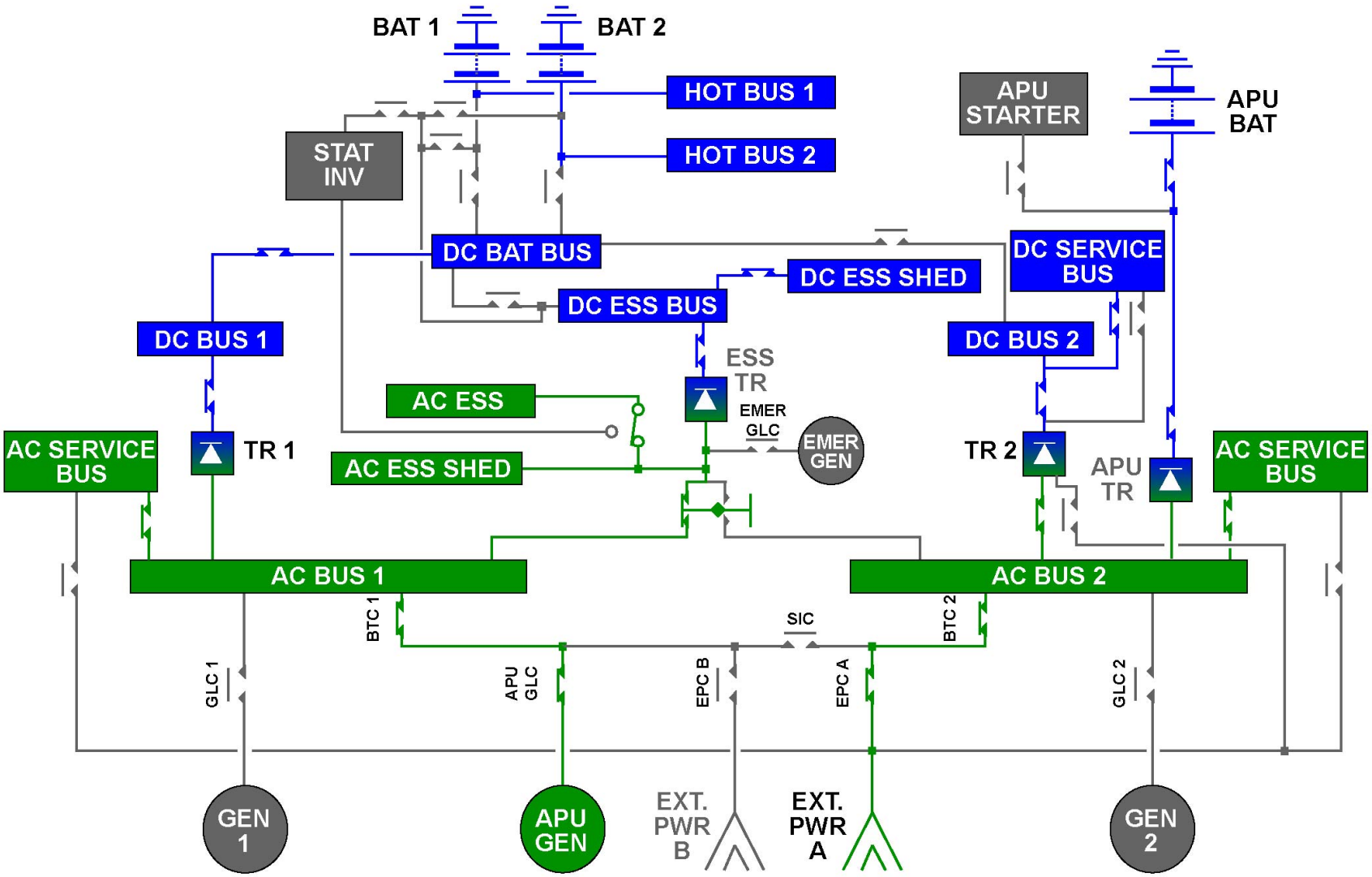

NBPT FUNCTION

G7508471 - G3NT1T0 - FM24DC00000002

ELECTRICAL SYSTEM GENERAL DESCRIPTION (3)

SUPPLY PRIORITY

In normal configuration, each engine generator supplies independently its own AC busbar. This is a split bus system.
The AC power source supply priority for each main AC BUS are as follows:
- for AC BUS 1: GEN 1 / APU GEN / EXT B / EXT A / GEN 2,
- for AC BUS 2: GEN 2 / EXT A / APU GEN / EXT B / GEN 1.

G7508471 - G3NT1T0 - FM24DC000000002

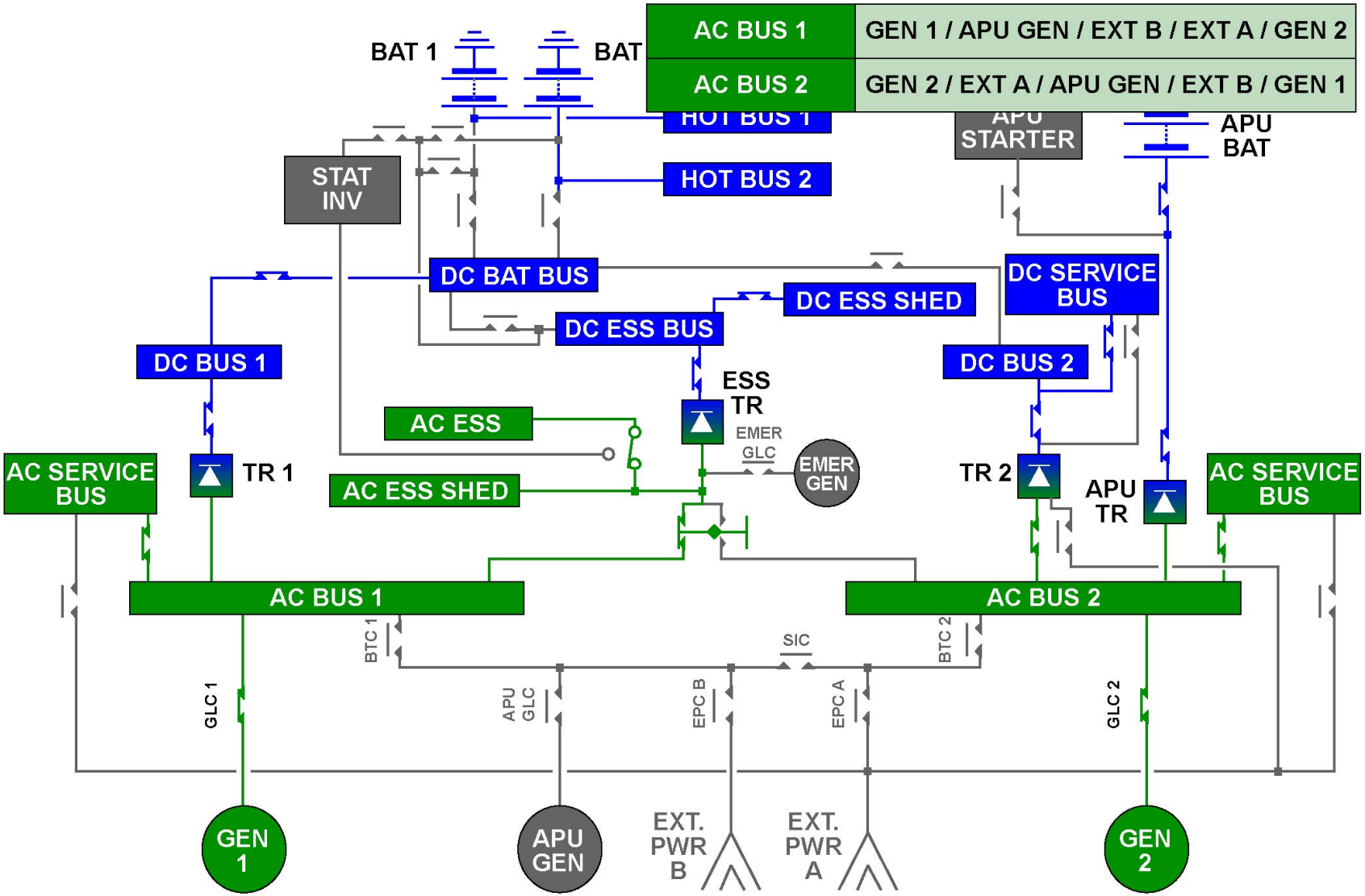

SUPPLY PRIORITY

G7508471 - G3NT1T0 - FM24DC00000002

ELECTRICAL SYSTEM GENERAL DESCRIPTION (3)

EMERGENCY CONFIGURATION

If AC BUS 1 and AC BUS 2 are lost, there is an automatic start of the EMER GEN (or CSM/G). This start sequence takes approximately 7 to 10 seconds. During the approximate 7 to 10 seconds, the AC ESS BUS and the DC ESS BUS are supplied by the aircraft batteries. When the EMER GEN is available the EMER GEN supplies the AC ESS BUS and the DC ESS BUS through the ESS TR. The EMER GEN will supply the AC and DC ESS buses until the end of the flight. The function and operation of the EMER GEN (CSM/G) is fully explained in the "EMERGENCY AC GENERATION SYSTEM DESCRIPTION and OPERATION" module.

G7508471 - G3NT1T0 - FM24DC000000002

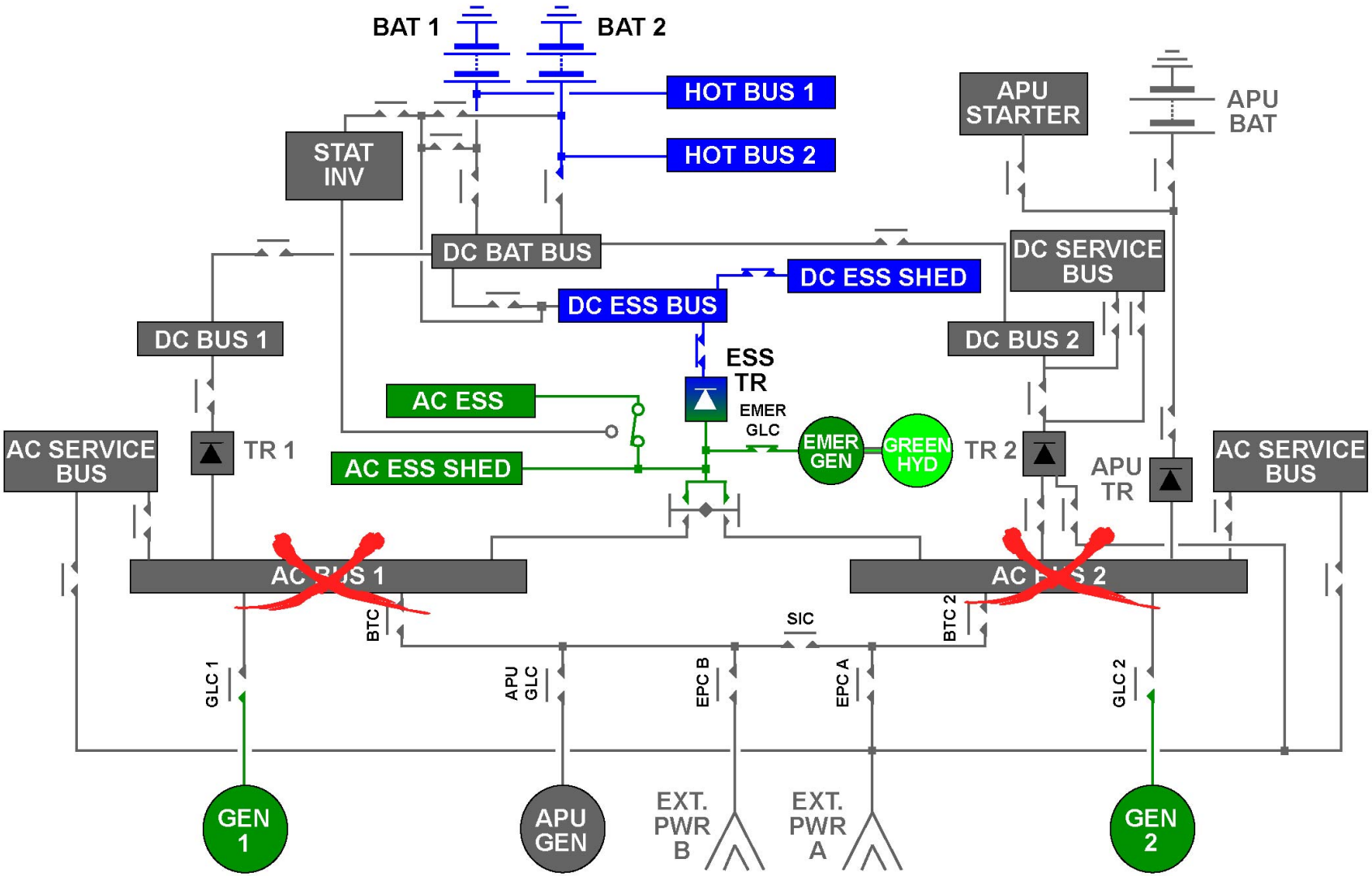

EMERGENCY CONFIGURATION

G7508471 - G3NT1T0 - FM24DC00000002

ELECTRICAL SYSTEM GENERAL DESCRIPTION (3)

BATTERIES ONLY SUPPLY

Fully charged aircraft batteries can supply the aircraft in flight or on ground in case of total loss of electrical sources.

IN-FLIGHT

Fully charged aircraft batteries can supply the aircraft in flight (speed above 50 Kts) for a minimum of 30 minutes.Note that batteries are connected in parallel and supply the DC ESS BUS and the AC ESS BUS via the STAT INV. In order to reduce the load on the aircraft batteries, the AC ESS SHED and DC ESS SHED buses are shed.

ON GROUND

This figure shows the electrical network configuration when batteries are the only supply on the aircraft on the ground. There is a complete discharge protection for the aircraft batteries. Note that batteries are connected in parallel and supply the DC ESS BUS, DC BAT BUS and the AC ESS BUS via the STAT INV. In order to reduce the load on the aircraft batteries, the AC ESS SHED and DC ESS SHED buses are shed.

G7508471 - G3NT1T0 - FM24DC000000002

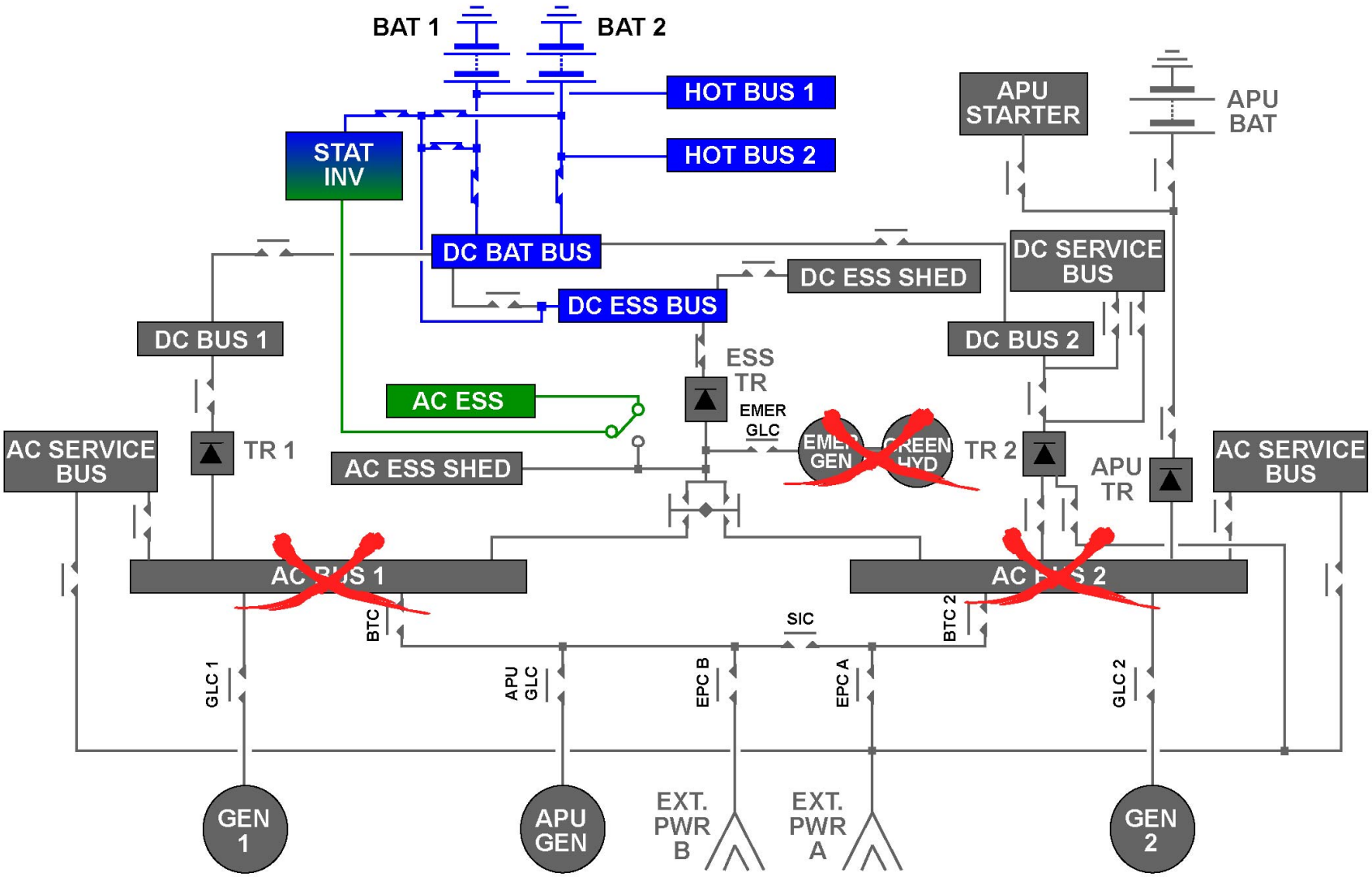

BATTERIES ONLY SUPPLY - IN-FLIGHT & ON GROUND

G7508471 - G3NT1T0 - FM24DC00000002

ELECTRICAL SYSTEM GENERAL DESCRIPTION (3)

CONTROL AND MANAGEMENT

In order to control, protect and manage all power sources and the electrical network, several computers are involved in the electrical system.

GENERATOR CONTROL UNIT (GCU)

Two identical Generator Control Units (GCUs) control, monitor and protect the engine IDGs.

GROUND AND AUXILIARY POWER CONTROL UNIT (GAPCU)

The Ground and Auxiliary Power Control Unit (GAPCU) controls, monitors and protects the two external power sources A and B and the APU GEN. It is also an interface for the GCUs BITE and for the Central Maintenance System (CMS).

ELECTRICAL CONTACTOR MANAGEMENT UNIT (ECMU)

Two Electrical Contactor Management Units (ECMUs) control the main AC and DC electrical power contactors, to manage the power source priorities which enable the reconfiguration of the main power supply sources. In addition, the ECMUs also authorize and supervise the NBPT function between available power sources and manage the galley shedding function to prevent a sustained overload condition on the AC power sources.

CONSTANT SPEED MOTOR / GENERATOR GCU (CSM/G GCU)

One CSM/G GCU controls, monitors and protects the CSM/G (EMER GEN).

BATTERY CHARGE LIMITER (BCL)

Three identical and interchangeable Battery Charge Limiters (BCLs) control, monitor and protect the batteries.

CIRCUIT BREAKER MONITORING UNIT (CBMU)

One Circuit Breaker Monitoring Unit (CBMU) is installed in order to monitor the status of the C/Bs.

G7508471 - G3NT1T0 - FM24DC000000002

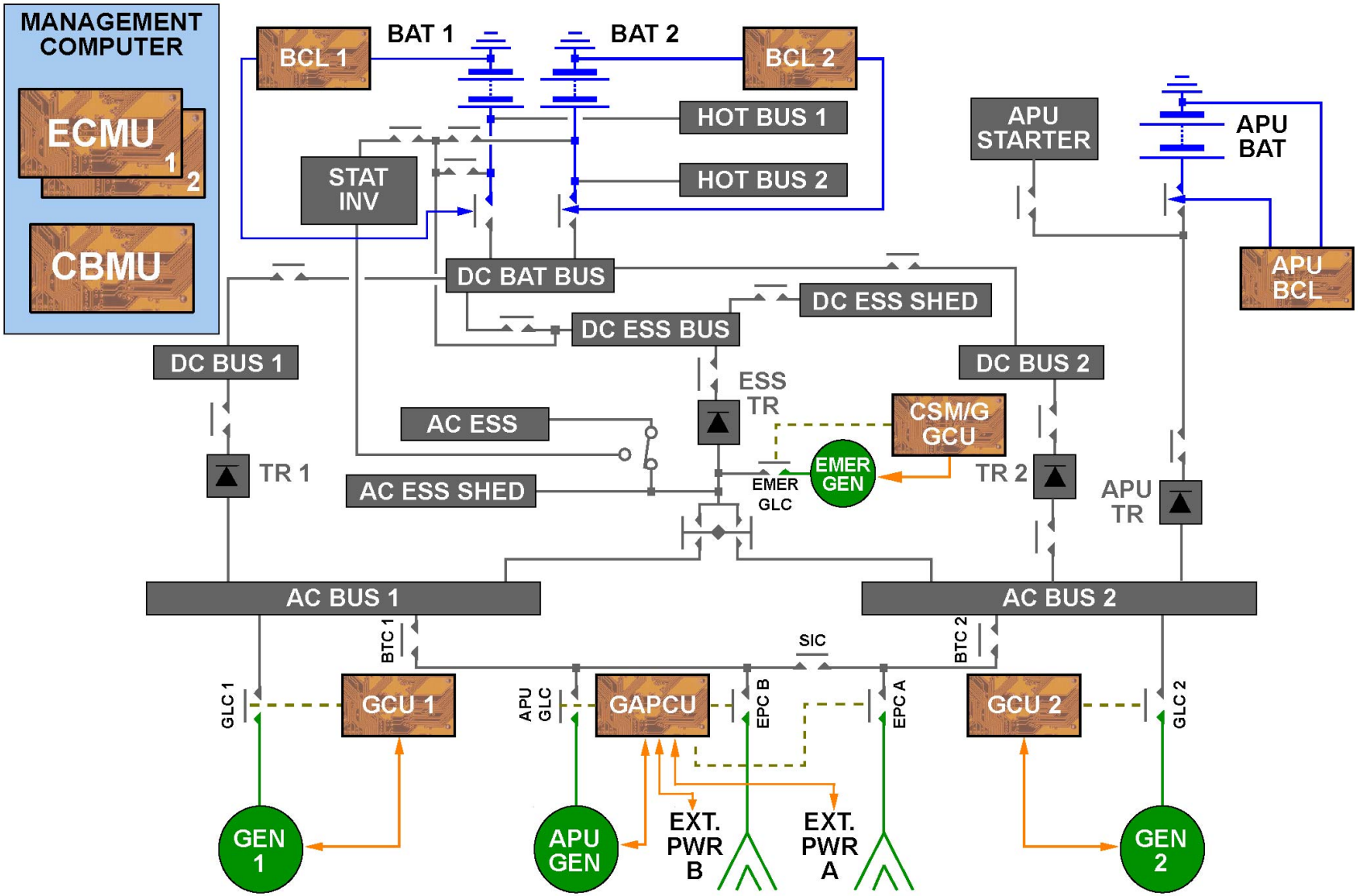

CONTROL AND MANAGEMENT - GENERATOR CONTROL UNIT (GCU) ... CIRCUIT BREAKER MONITORING UNIT (CBMU)

G7508471 - G3NT1T0 - FM24DC00000002

MAIN AC GENERATION D/O (3)

PRESENTATION

This module presents the Integrated Drive Generator (IDG) control, indicating and operation.

ELECTRICAL PANEL AND AC ECAM PAGE

On the overhead panel, on the ELECtrical panel (235VU), it is possible to control and monitor:
- the IDG disconnection via IDG P/B,
- the GENerator disconnection and Generator Control Unit (GCU) resetting via GEN P/B.

The EL/AC ECAM page allows the monitoring of IDG. For this explanation, IDG 1 is used as an example.

INTEGRATED DRIVE GENERATOR

There is one IDG for each engine. IDGs are identical and each IDG supplies its own AC busbar.
IDG is a two pole high speed (24000 RPM) brushless spray oil cooled unit.
IDG comprises, in a common housing:
- the drive part, called Constant Speed Drive (CSD), containing monitoring and control components,
- the GENerator part, composed of a Permanent Magnetic Generator (PMG), an exciter generator with rotating diodes and a main GEN.

The CSD of the IDG converts the variable input speed (4900 to 9120 RPM), provided by the engine gearbox, into a constant output speed (24000 RPM).

GENERATOR CONTROL UNIT

Each IDG is controlled and monitored by its own GCU. All the GCUs are fully identical and interchangeable. The GCU performs the following main functions:
- control, monitoring and protection of the IDG (GEN and CSD),
- regulation of the GEN voltage,
- regulation of the GEN frequency,
- No Break Power Transfer (NBPT) function in conjunction with the Electrical Contactor Management Units (ECMUs),
- interface with the System Data Acquisition Concentrators (SDACs) for indication,
- interface with the Full Authority Digital Engine Control (FADEC) for engine speed acquisition for control, monitoring and protection functions,
- interface with the Central Maintenance System (CMS) via the Ground and Auxiliary Power Control Unit (GAPCU) for BITE functions.

A pin programming provides the GCU with the following information:
- the A/C type,
- the GCU position identification,
- the current limit for voltage regulation.

During normal operation, each GCU performs voltage and frequency monitoring and regulation. The GCU provides operational indications to the flight deck and protects the IDG from abnormal operation.

GENERATOR LINE CONTACTOR

The Generator Line Contactor (GLC) allow connection of the generator to the corresponding AC BUSbar. Each GLC is controlled and monitored by the associated GCU and ECMU.

FEEDER LINE

A 3 phase generator feeder cable and neutral connects the generator terminal block to a terminal block located on the upper engine structure (disconnection for engine change). The neutral line is grounded to the engine structure. Another terminal block, located in the pylon, splits each phase into two feeder cables (parallel feeders), sent through the wing leading edges and the cargo compartment to rack 710VU in the avionics compartment. The parallel feeders are connected to the GLC after having passed through a 6-hole Current Transformer (CT) used for protection monitoring. The feeder lines and the GEN are monitored

G7508471 - G3NT1T0 - FM24D100000003

and protected for differential current conditions and open cable conditions.

ECMU

The GLC is under control of the related GCU and ECMU. If all parameters are correct, the GLC connects the generator to its own busbar.
The ECMUs receive relative IDG information via the GCUs. Each ECMU monitors the status of its own side contactors (ECMU 1 for LH side and ECMU 2 for RH side) and ensures the opening or closing of the contactors according to the priority logic and the NBPT operation (on ground only).

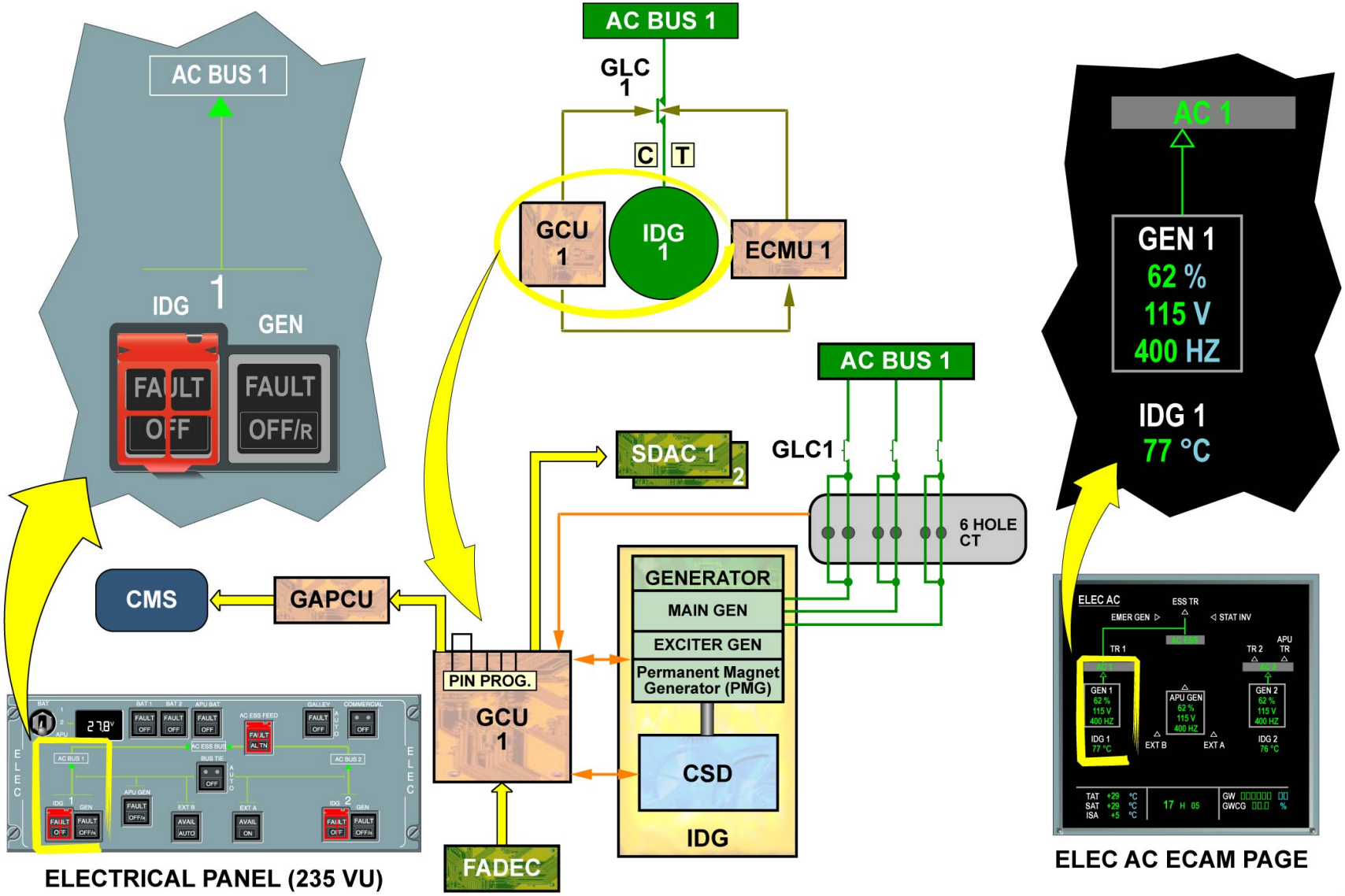

PRESENTATION - ELECTRICAL PANEL AND AC ECAM PAGE ... ECMU

G7508471 - G3NT1T0 - FM24D100000003

This Page Intentionally Left Blank

G7508471 - G3NT1T0 - FM24D1000000003

MAIN AC GENERATION D/O (3)

INTEGRATED DRIVE GENERATOR OPERATION

This topic presents the IDG operation.

IDG CONTROL P/B

The IDG can be manually disconnected, from the engine gear box, with the IDG P/B, located on the overhead ELEC panel (235VU). When the engine is running, above the under-speed set point value (about 4900 RPM), action on this P/B immediately disconnects the IDG. During engine operation and upon IDG fault (overheat or abnormal oil low pressure), the IDG FAULT legend on panel 235VU comes on.

NOTE: The IDG FAULT legend comes on, associated to an ECAM level 2 caution.

Action on the IDG P/B will lead IDG to disconnect and the OFF legend to illuminate. With engine stopped, the IDG cannot be manually disconnected. An under-speed condition generated by the GCU inhibits the disconnection.

GEN CONTROL P/B

The GEN P/B on the overhead ELEC panel is used to connect or disconnect the generator and to reset the GCU. When the P/B is released out (off position), the OFF/R legend appears, the generator field is de-energized and the line contactor is open. When the P/B is pressed in (on position), the generator is connected as soon as the electrical parameters are within the limits.
The FAULT legend comes on (in ON position only) in the following cases:
- the related engine is shutdown,
- during operation with any incorrect parameter,
The GLC stays open due to a failure despite the parameters are correct.
The FAULT information is sent to ECAM. After fault detection, setting the GEN P/B to OFF and then to ON resets the GCU and the GEN.

GENERATOR SPEED CONTROL

The GEN speed is controlled by a system composed of a servo-valve in the IDG and an electronic control circuit in the GCU. The electronic control circuit controls the servo-valve, which in turn controls the CSD speed variation to keep the GEN at a constant frequency. The GCU performs the speed control of the IDG whenever several conditions are met:
- the GCU is powered up,
- engine input speed to the IDG is between 4900 and 9120 RPM,
- no failure is present in the servo valve control circuit.

IDG OIL SYSTEM

The IDG oil is used for cooling, lubrication and operation of the CSD and the cooling and lubrication of the GEN .

IDG OIL TEMPERATURE

There are two oil temperature sensors in the IDG:
- one sensor on the IDG oil inlet port,
- one sensor on the IDG oil outlet port.
These sensors allow the IDG oil temperature to be monitored.
The GCU transmits the oil outlet temperature to the SD EL/AC page for oil temperature indication.
When the Outlet Oil Temperature (OOT) reaches 152 °C (305.6 °F), an advisory mode is sent to the ECAM. If oil overheat detection is sensed (OOT > 185 °C (365 °F)), the warnings are provided to the ECAM and FAULT legend appears on IDG P/B, which requires a manual disconnection of the IDG (ECAM and BITE message: OIL OVHT).

G7508471 - G3NT1T0 - FM24D100000003

IDG OIL PRESSURE

The oil pressure is monitored by a Low Oil Pressure (LOP) switch located in the IDG charge oil circuit. The LOP switch provides a signal to the GCU when IDG charge oil pressure is less than 140 PSI (9.65 bars). In LOP condition, that is not caused by under-speed, the IDG P/B FAULT legend comes on amber and an ECAM warning IDG 1(2) OIL LO PR is triggered.

The IDG scavenge oil filter is fitted with a Differential Pressure Indicator (DPI), which indicates a clogged filter condition. The switch is located across the scavenge filter and associated to a pop-out indicator located on the IDG filter housing. In the case of a clogged filter, the DPI sends a signal to the GCU, which, in turn, sends a status message to the ECAM. A visual check of the pop-out is required. If the DPI is popped out, both filters (inlet and outlet) and oil must be removed, inspected and replaced according to Aircraft Maintenance Manual (AMM) procedures.

The DPI device is automatically inhibited during cold oil running conditions (under-speed), due to high oil viscosity.

IDG OIL LEVEL

The GCU includes a Remote Oil Level Sensor (ROLS) function that enables to know the IDG oil level status.

NOTE: In case of low oil level detection, the GCU generates a LOW OIL LEVEL message to the Central Maintenance Computer (CMC) via the GAPCU. A message is displayed on ground on the status page of the ECAM system display to inform the crew.

The ROLS sensor is located in the IDG.

Eight minutes after engine shutdown, the GCU initiates an oil level interrogation sequence. Then the sequence is generated every six minutes. In the case of oil low level detection, the GCU sends a status message to the ECAM. A visual check of the oil level sight glass is required. Oil servicing is performed according to the oil level determined by the oil level sight glass level indication colors (red, yellow, green).

G7508471 - G3NT1T0 - FM24D100000003

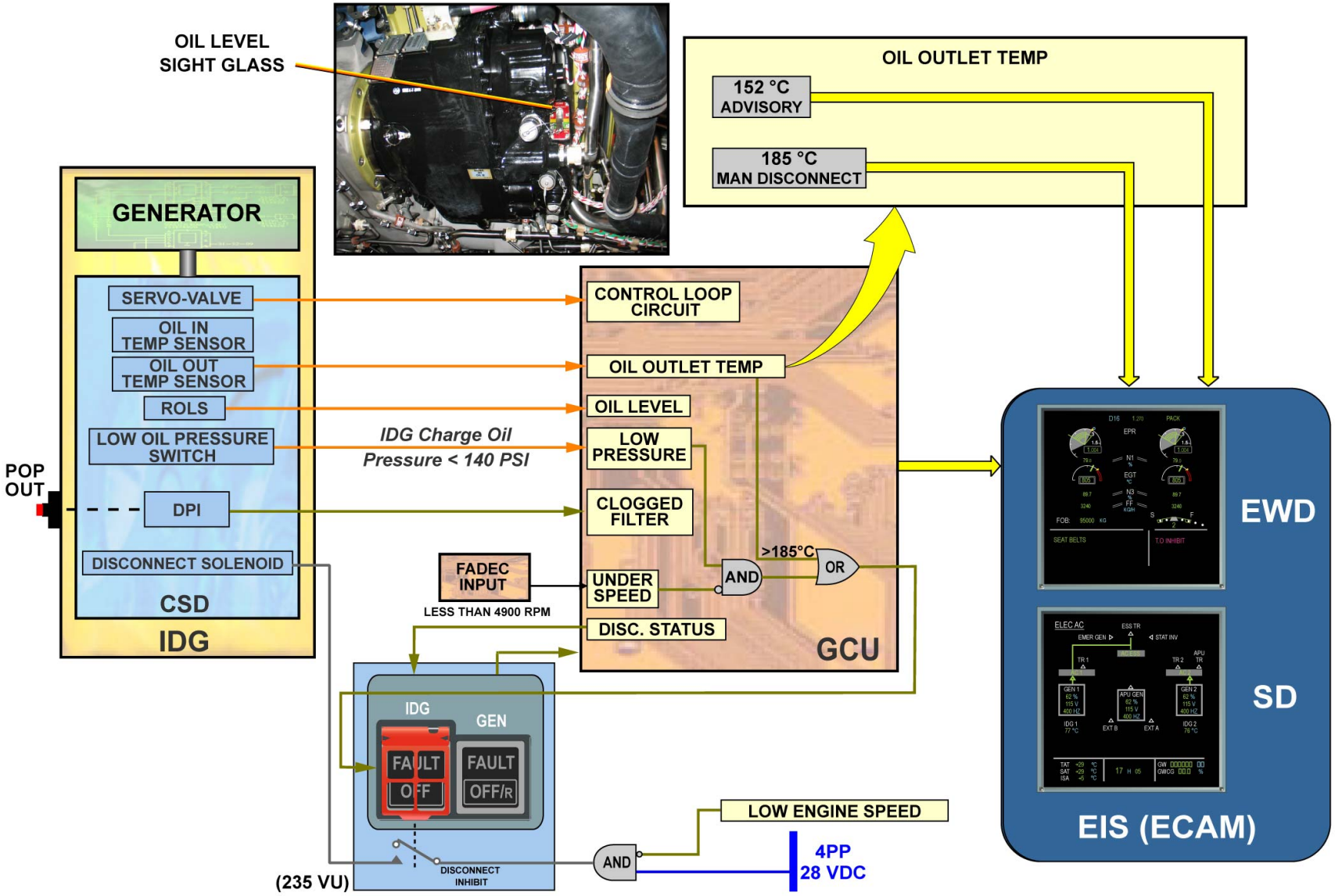

INTEGRATED DRIVE GENERATOR OPERATION - IDG CONTROL P/B ... IDG OIL LEVEL

G7508471 - G3NT1T0 - FM24D100000003

This Page Intentionally Left Blank

G7508471 - G3NT1T0 - FM24D1000000003

MAIN AC GENERATION D/O (3)

IDG OIL COOLING SYSTEM AND DISCONNECTION MECHANISM

This topic presents the IDG oil cooling system and the disconnection mechanism.

SPEED CONTROL LOOP

The speed control loop is composed of a servo-valve in the IDG and an electronic control circuit in the GCU that includes the Servo-Valve ReLaY (SV RLY). The electronic control circuit monitors the generator PMG frequency and compares it with a GCU internal frequency reference.
The difference between these two frequencies creates an error signal. This signal is used to control the servo-valve oil via the SV RLY to regulate the output speed.
The servo-valve maintains the desired generator frequency (400 Hz) by controlling the movement of a variable hydraulic unit according to the error signal. The variable hydraulic unit acts on a rotary part allowing the output speed of the CSD to be adjusted. Notice that during NBPT condition, the PMG frequency is compared with the frequency reference of the source connected in parallel.

IDG DISCONNECTION MECHANISM

When the engine is running (input speed above 4875 RPM), the FAULT legend of the IDG P/B comes on if the IDG oil pressure is less than 140 PSI (9.65 bars) or if the IDG oil outlet temperature is above 185 °C (365 °F). In both cases, the IDG must immediately be disconnected via the IDG P/B. When the IDG P/B is pressed, the solenoid control relay is energized and connects the 28V DC to the disconnection solenoid that will open the disconnect clutch. The FAULT legend goes off (if for an OIL OVHT the oil temp goes below 185 °C (365 °F)) and the IDG P/B OFF legend comes on.

The OFF legend remains on until the clutch is reset and the engine is running. IDG reset can only be performed on ground with engine shutdown, by pulling the reset ring mounted on the IDG casing. In under-speed condition (input speed below 4875 RPM) it is not possible to disconnect the IDG. Note that a detected under-speed also inhibits some protection circuits (under-frequency and under-voltage).
Example of A340 IDG Disconnection / Reconnection film.

NOTE: Some procedures for this operation are not shown on the film (e.g. opening certain circuit breakers). Always follow the maintenance manual for this operation.

G7508471 - G3NT1T0 - FM24D100000003

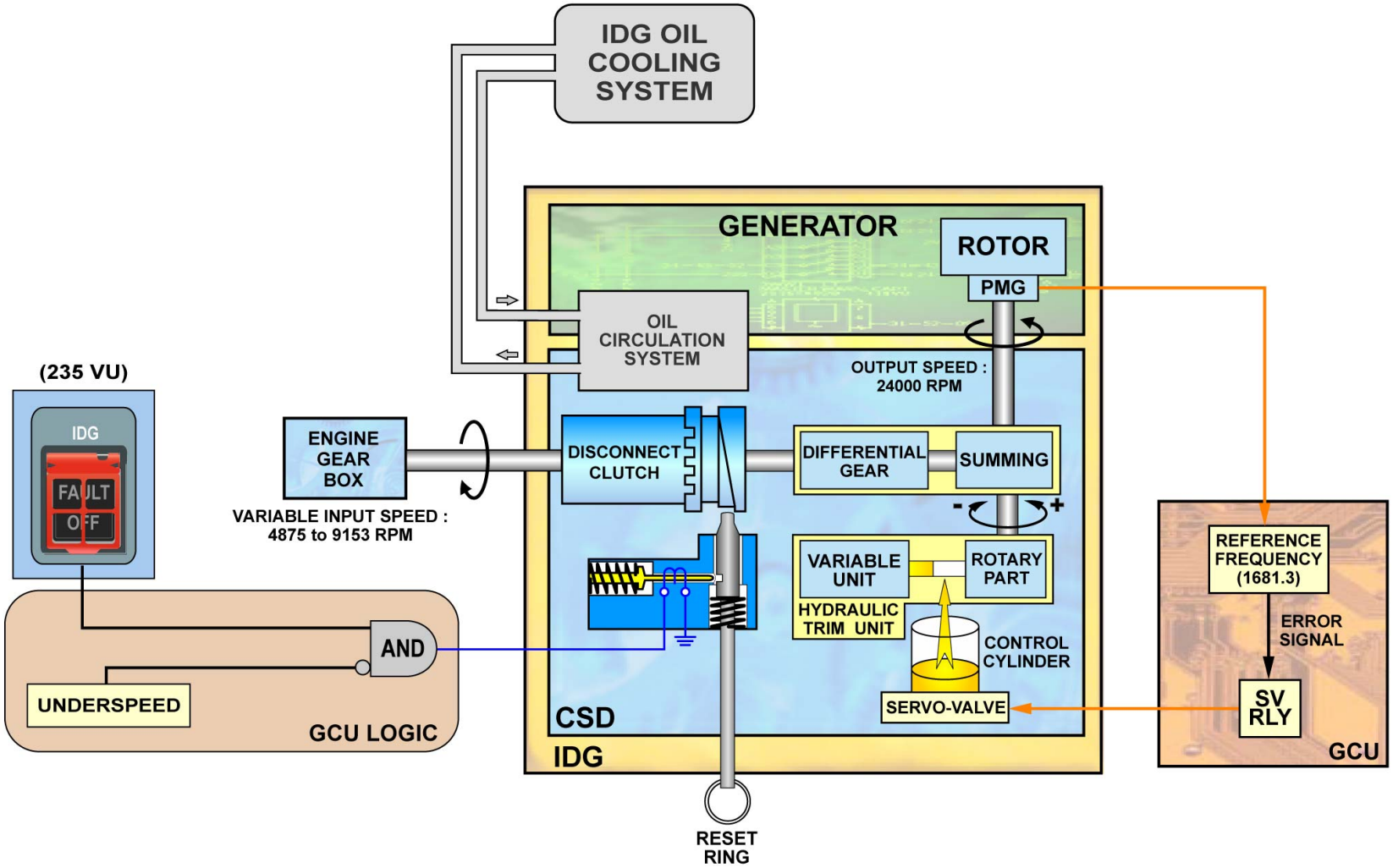

IDG OIL COOLING SYSTEM AND DISCONNECTION MECHANISM - SPEED CONTROL LOOP & IDG DISCONNECTION MECHANISM

G7508471 - G3NT1T0 - FM24D1000000003

IDG OIL COOLING SYSTEM AND DISCONNECTION MECHANISM - SPEED CONTROL LOOP & IDG DISCONNECTION MECHANISM

This Page Intentionally Left Blank

G7508471 - G3NT1T0 - FM24D1000000003

MAIN AC GENERATION D/O (3)

IDG OIL COOLING SYSTEM AND DISCONNECTION MECHANISM (continued)

OIL COOLING

Two types of oil cooling system exist:
- oil cooling via Air Cooled / Oil Cooler system,
- oil cooling via Engine Fuel / Oil Cooler system and Air / Oil Heat Exchanger.

The Air Cooled / Oil Cooler system is available for A330 equipped with Rolls Royce (RR) engines. The Air Cooled / Oil Cooler is composed of a heat exchanger matrix and a duct.
The heat exchanger is connected to the IDG oil system by two oil connections (in and out). The oil flows through the matrix and distributes the heat to the matrix fins.
If the oil is cold and does not flow easily through the matrix, a pressure relief valve will open. This will let the oil flow directly from the inlet connection to the outlet connection and back to the source. When the oil temperature increases, the pressure relief valve closes and the oil flows again through the matrix.
A330 equipped with Pratt & Whitney (PW) or General Electrics (GE) engines use an Air / Oil Heat Exchanger and an Engine Fuel / Oil Cooler for IDG oil cooling.
The IDG oil outlet is cooled via the Air / Oil Heat Exchanger by fan air during high ENG power time (take-off, climb, cruise) or by 2.5 bleed cooling air during low ENG power time (ground idle, taxi, idle descent). The Air valve, regulated by the Electronic Engine Control, maintains an IDG oil temperature less than 105 °C (221 °F).
Then IDG oil flows in the Engine Fuel / Oil Cooler to keep an IDG oil inlet temperature between 70 °C (158 °F) and 105 °C (221 °F).

NOTE: Note: the Air / Oil Heat Exchanger valve is spring loaded in case of no information from Electronic Engine Control to allow the oil cooling.

G7508471 - G3NT1T0 - FM24D100000003

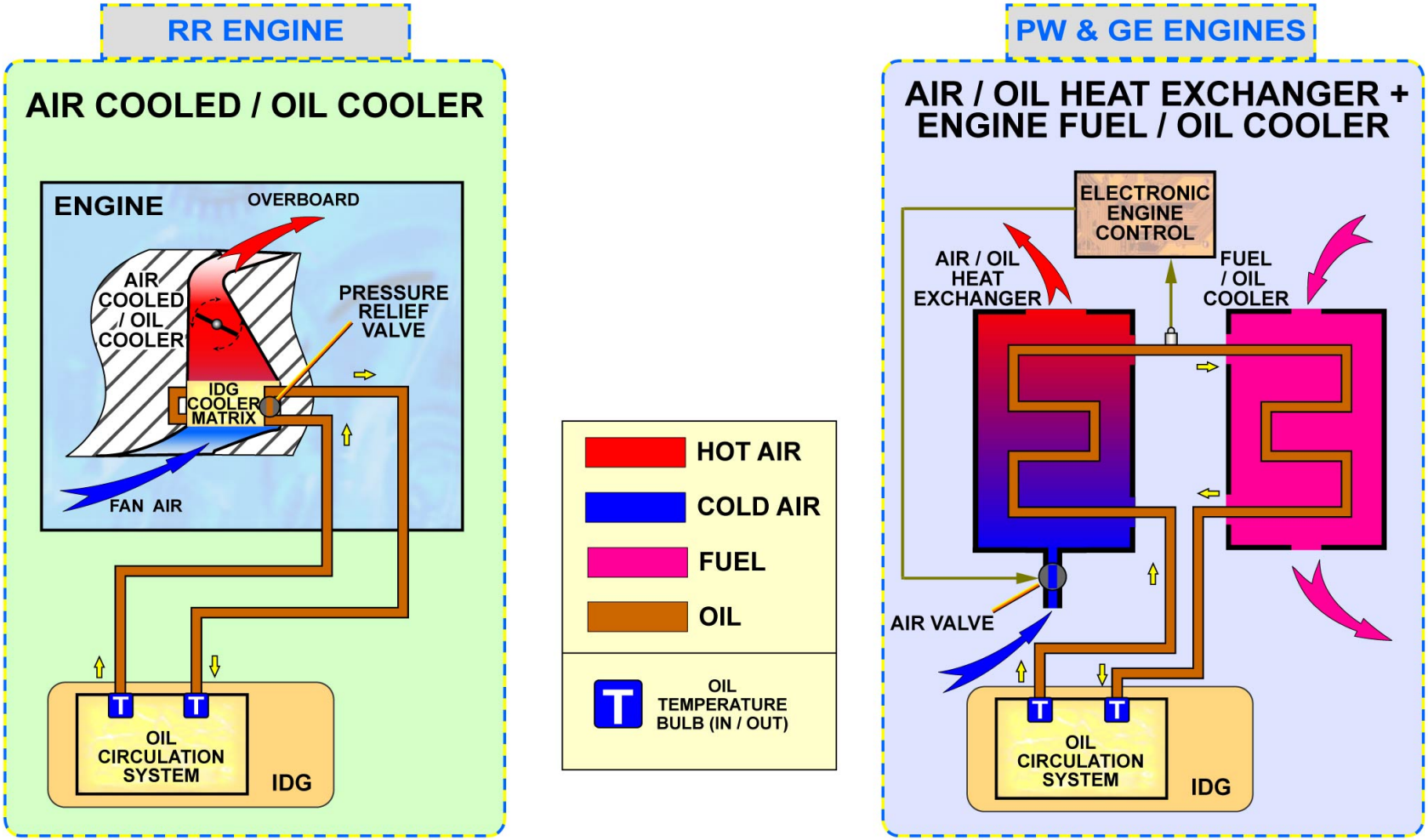

IDG OIL COOLING SYSTEM AND DISCONNECTION MECHANISM - OIL COOLING

MAIN AC GENERATION D/O (3)

MAIN AC ELECTRICAL SYSTEM OPERATION

This topic presents the main AC electrical system operation.

CONTROL AND PROTECTION

The GCU controls the connection and disconnection of the IDG to and from the AC ELEC system. These controls are mainly performed by means of 3 internal relays:
- the Generator Control Relay (GCR) controls the generator excitation,
- the Power Ready Relay (PRR) controls the GLC and the NBPT,
- the SV RLY controls the generator rotor speed by means of the servo-valve.

If a protection function is triggered, the GCR, the PRR and, in some cases, the SV RLY are de-energized.

VOLTAGE REGULATION

The GCU monitors the Point Of Regulation (POR) in order to keep the voltage at nominal value (115V AC) at this point. The POR is located at the end of the generator feeder, upstream of the GLC. The voltage regulation is achieved by regulating the current through the exciter field.
The output from the PMG is connected via the GCR to the excitation and regulation control module, where it is converted into DC voltage and applied to the exciter field. The voltage frequency regulation module senses the average of the three phases at the POR and compares it against a reference voltage. If a difference exists, the voltage regulator adjusts the exciter field current as needed to keep a constant voltage at the POR.

UNDER-SPEED

Pin programming activates the underspeed set point. The Engine Interface and Vibration Monitoring Unit (EIVMU) provides ENG speed information to the GCU for under-speed set point. The EIVMU is a part of the FADEC. When the ENG speed falls below the under-speed threshold (4900 RPM), the PRR trips and the excitation is biased off due to under-frequency at PMG output (<335 Hz). If under-speed is detected, no reset action via the GEN P/B is required. If ENG speed data is not available, the GCU refers to the PMG frequency (1681.3 Hz).
If ENG speed data is below the set point, IDG disconnection is inhibited.

OVER-VOLTAGE

Typically, the GCU performs an over-voltage protection function if the highest individual phase at POR reaches 130 +/- 1.5V AC. Then, the PRR and the GCR are tripped to protect the whole network. Notice that the higher the over-voltage, the faster the relays are tripped (inverted time delay).

OVER-FREQUENCY

The GCU starts to perform over-frequency protections if the PMG frequency is above 435 Hz, for at least 4 seconds, the GCU trips the PRR, GCR and SV RLY.

DIFFERENTIAL PROTECTION

The differential protection is based on the comparison of each phase of the line 6 hole CTs and the GEN CTs in the IDG. If the difference of current is above 50 +/- 10 A for at least 60 milliseconds, the PRR and GCR are tripped. The differential protection circuit reset is done via the GEN P/B and this protection can be reset twice. After 2 reset attempts, the GCU must be powered down (cold start) to reset the protection latch-in software.

OVERLOAD AND OVERCURRENT

The IDG (GEN) CTs provide current sensing information to the GCU. In case of overload or over-current, the corresponding GCU protection circuits are triggered. If the overload is still present 10 seconds after

G7508471 - G3NT1T0 - FM24D100000003

this initialization, the GCU only sends a signal to ECMUs to shed the corresponding galley. No tripping occurs.
The automatic shedding is performed by ECMUs, and no ECAM warning is triggered. If the automatic shedding is not performed, the ECAM is triggered and the FAULT legend on the GALLEY P/B comes on. The crew has to press the GALLEY P/B to manually shed the galley load to reduce the generator load.
If an over-current is detected, after the inverted protection time delay, the Bus Tie Contactor (BTC) is locked in OPEN position. If the fault persists, the GEN is de-energized (via the GCR) and the GLC is opened (via the PRR).

INADVERTENT PARALLEL TRIP

The power supply logic to each AC main bus bar is established through the ECMU control system. Furthermore, the NBPT allows two AC sources to be connected momentarily during the transfer phase. After transfer completion, a special protection in the ECMU and GCU (lock out circuit) avoids an Inadvertent Paralleling Trip (IPT) condition.

FIRE PROTECTION

In case of ENG fire, if the related fire switch is released out, a 28V DC signal is sent to the corresponding GCU that shuts down its IDG. This signal is not latched, thus no reset is required.

G7508471 - G3NT1T0 - FM24D1000000003

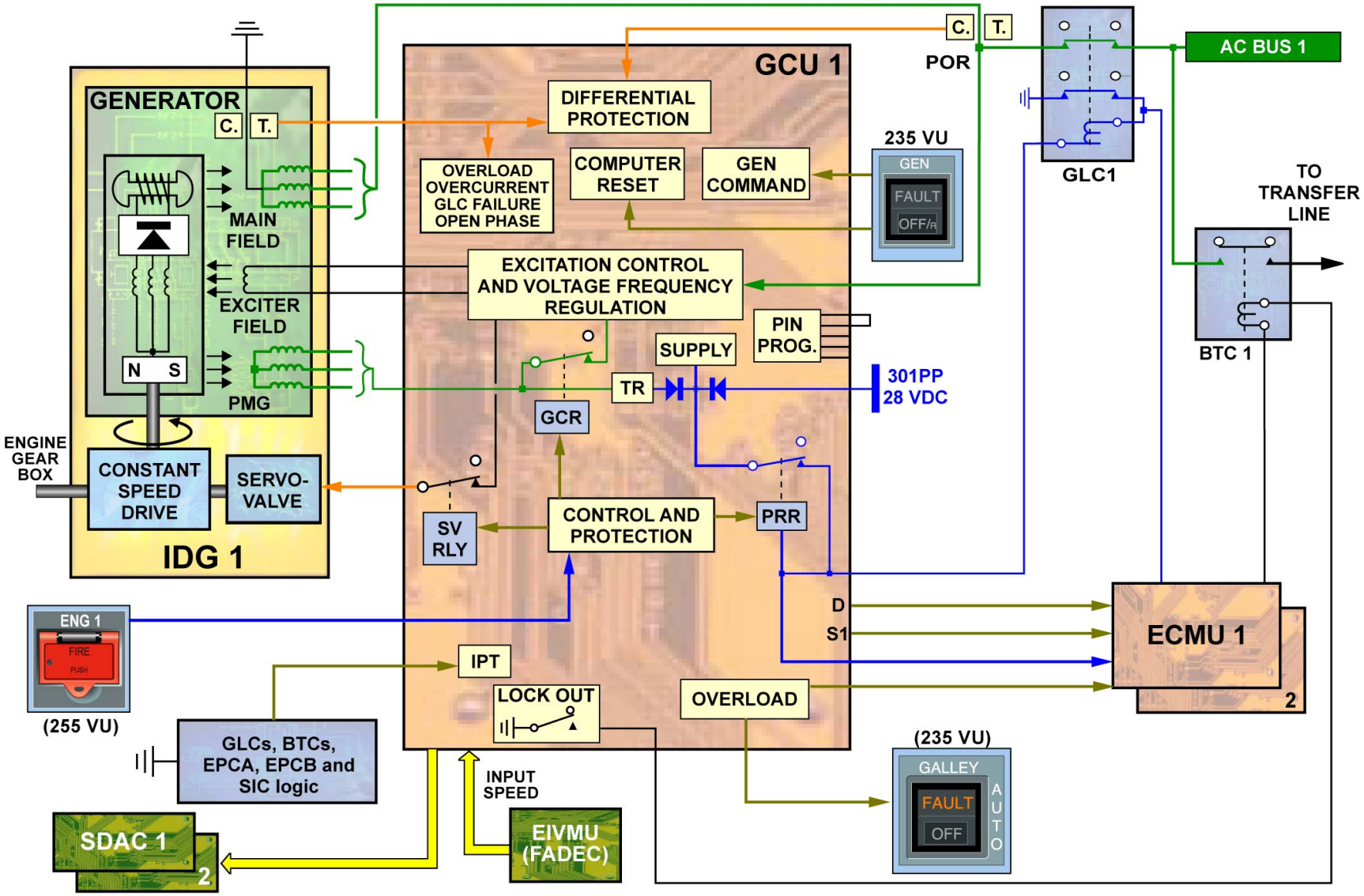

MAIN AC ELECTRICAL SYSTEM OPERATION - CONTROL AND PROTECTION ... FIRE PROTECTION

G7508471 - G3NT1T0 - FM24D100000003

This Page Intentionally Left Blank

G7508471 - G3NT1T0 - FM24D1000000003

AUXILIARY AC GENERATION D/O (3)

DESCRIPTION

Three sources can provide AC auxiliary generation:
- the APU generator,
- the two external power receptacles (EXT PWR A and B).

These three sources are controlled and monitored by the Ground and Auxiliary Power Control Unit (GAPCU) and the Electrical Contactor Management Units (ECMUs) via associated contactors (External Power Contactors (EPCs) and APU Generator Line Contactor (AGLC)).

GAPCU

The GAPCU ensures all functions of the conventional APU Generator Control Unit (APU GCU) and Ground Power Control Unit (GPCU) such as the control and the monitoring of auxiliary sources.
The GAPCU controls, monitors and regulates the APU generator (eg: voltage regulation). It also controls and monitors the two EXT PWR parameters (voltage, frequency).
The GAPCU and ECMUs control the connection to the network of the sources via the AGLC and EPCs.
The main task of the ECMUs is to control and monitor the AGLC and EPCs in No Break Power Transfer (NBPT) conditions with the A/C on ground.

APU GENERATOR

The APU generator can supply all or part of the normal network, depending on the priority logic of the network supply.
The APU generator is a two pole high speed (24000 RPM) brushless spray oil cooled generator. Speed regulation is made by the APU (there is no Constant Speed Drive (CSD)); therefore, it operates in the same manner but it is not interchangeable with the Integrated Drive Generators (IDGs).

The APU oil system is also used to cool and lubricate the APU generator. Therefore, the oil system is entirely monitored by the APU Electronic Control Box (ECB).

EXTERNAL POWER

Two EXT PWR receptacles (A and B) are located aft of the nose landing gear well.
The external power receptacles can supply the entire aircraft network by means of one or two Ground Power Units (GPUs).
The EPCs enable the GPU to be connected to the transfer circuit. These contactors are controlled and monitored by the GAPCU and the ECMUs.

FEEDER LINE

The APU feeder line is split into 2 cables per phase (parallel feeders). They are routed through the cargo ceiling to rack 700VU in the avionics compartment, where they are sent though a six-hole Current Transformer (CT) before connection to the AGLC.
The feeder line and the APU generator are protected by the differential open cable protection.
The EXT PWR feeder lines are not split into 2 cables (single feeders). They are routed directly to the avionics compartment rack 700VU. There are 3 CTs upstream the EPCs (one per phase), per EXT PWR source (A and B) to monitor the quality of the power supply.

APU GEN AND EXTERNAL POWER CONTROL P/BSW's

The APU GENerator P/BSW and the two EXT PWR (A and B) P/BSWs are located on the overhead ELECtrical panel and have 2 stable operating positions.
When selected ON (EXT PWR A, Not "OFF" for APU GEN and AUTO for EXT PWR B), they enable the GAPCU to control, monitor and connect the APU GEN and the external power sources to the aircraft network.

G7508471 - G3NT1T0 - FM24D200000002

A manual deselection of the APU GEN switch de-energizes and disconnects the APU GEN and resets the APU GEN control part in the GAPCU.
A manual deselection of the EXT PWR switch disconnects the GPU from the A/C network.

G7508471 - G3NT1T0 - FM24D200000002

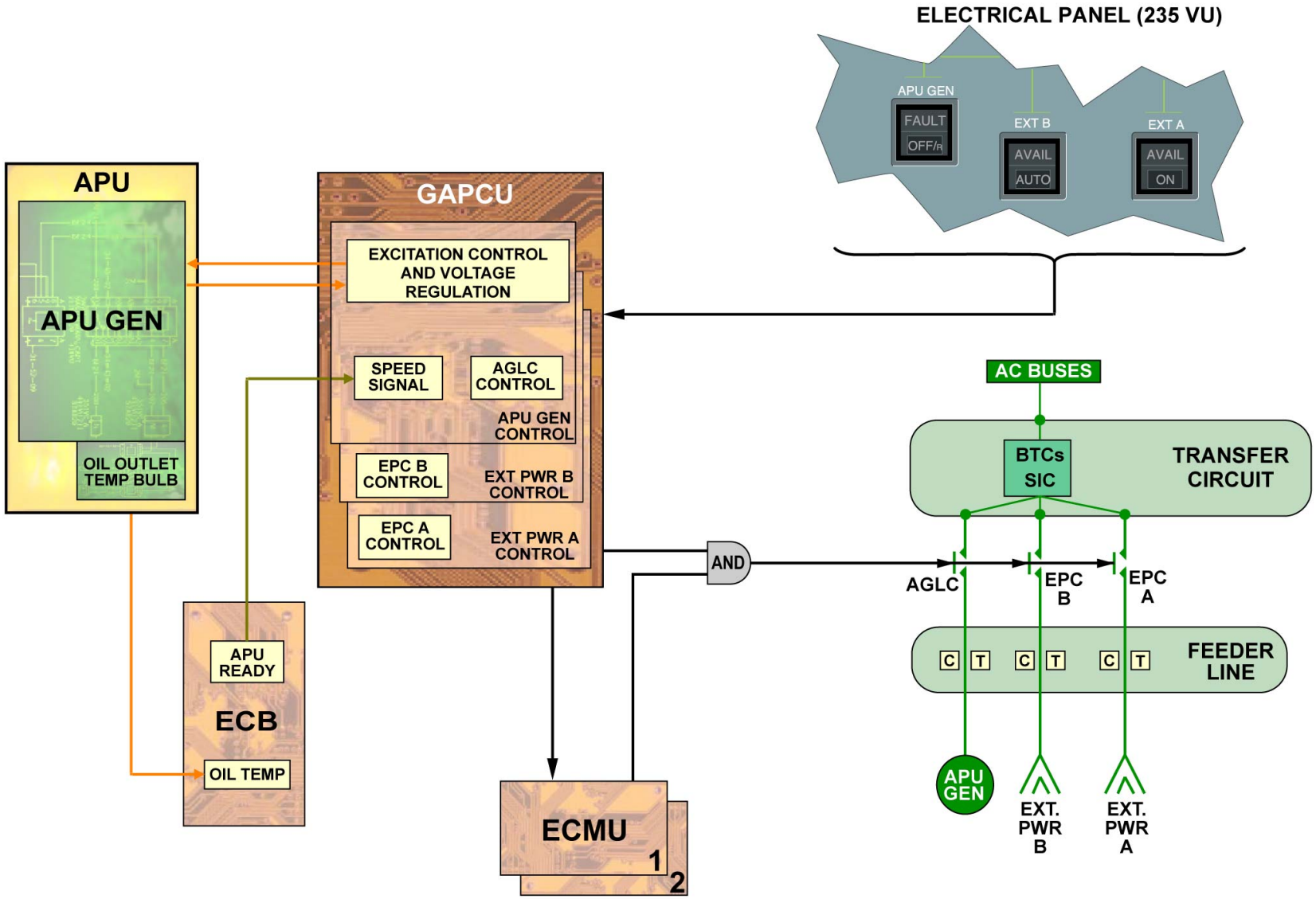

DESCRIPTION - GAPCU ... APU GEN AND EXTERNAL POWER CONTROL P/BSW'S

G7508471 - G3NT1T0 - FM24D200000002

This Page Intentionally Left Blank

G7508471 - G3NT1T0 - FM24D2000000002

AUXILIARY AC GENERATION D/O (3)

GAPCU DESCRIPTION

The GAPCU controls both the APU generator channel and external power A and B sources through contactors and relays.
These contactors and relays (AGLC, EPCs, System Isolation Contactor (SIC), Power Ready Relay (PRR), External Power Ready Relay (EPRR)) can only be closed when the correct conditions exist. They are opened manually or automatically (control and protection).
In addition, the GAPCU performs:
- a back-up control for external power A only,
- BITE analysis,
- communication functions between Generator Control Units (GCUs), ECMUs, ECB, Centralized Maintenance Computers (CMCs), Landing Gear Control and Interface Unit 1 (LGCIU 1),
- interface with ECAM (via the System Data Acquisition Concentrators (SDACs)), APU, AGLC.

POWER SUPPLY

In normal operation, the GAPCU internal power supply module can be supplied by:
- the APU Permanent Magnetic Generator (PMG) via the APU (Transformer Rectifier) TR,
- the EXT PWR A via an internal TR.

If a total power supply failure occurs (loss of APU GEN and EXT PWR A and B), the Battery Bus bar 301 PP (DC BAT BUS) supplies the GAPCU via circuit breaker 39XG. This safety is the GAPCU back-up supply.

COMMON FUNCTION

The GAPCU communicates with the GCUs, and the CMCs.
The GAPCU communicates with each of the GCUs via MIL 1553 links.
The GAPCU always initiates the transfer of information from the GCUs, and communicates during the 2 transmission modes (normal and interactive).
In normal mode (FLIGHT), the GAPCU periodically interrogates each GCU for channel and fault status.
The GAPCU also receives the GCU Line Replaceable Unit (LRU) identification and pin programming information (A/C and engine types).
In interactive mode (only on ground when requested from CMCs), the normal mode may be interrupted. The GAPCU will request a self-test of each of the GCUs and will perform its own self-test.
The GAPCU is a type 1 computer. It communicates with the two CMCs via two ARINC 429 links.
During the normal mode of transmission, the GAPCU will continually send its own fault data and that of the GCUs to the CMCs.
Access to the interactive menu is gained through the Electrical Power Generation System (EPGS) system page, displayed on the MCDU System/Report Test page.
Upon request from the CMC, the GAPCU stops the normal mode of transmission and enters the interactive mode to follow CMC commands.
Then, the GAPCU transmits the EPGS main menu.
The GAPCU interfaces with two SDACs via an ARINC 429 link.
During all operation modes, the GAPCU will continually transmit data to the SDACs. The SDACs will use this data to provide information and warnings to the ECAM.
The GAPCU receives an air/ground mode signal from LGCIU1.
This LGCIU 1 signal is used for the ground/flight status.
Due to NBPT reasons, when the aircraft is on ground, the APU GEN has priority over the EXT PWR B. Once the APU generator is connected, phase A is sent to the Frequency Reference Unit (FRU).
The FRU signal is sent to other GCUs and serves as a reference for further NBPTs.

If the APU GEN is in overload condition, the GAPCU informs the ECMU which sheds the GALLEY and indicates the information in the cockpit.

APU GEN CONTROL BOARD

FUNCTIONS:

The GAPCU also controls, monitors and protects the APU generator supply to the network.
It ensures the following main functions:
- control of the field excitation through the Generator Control Relay (GCR),
- voltage regulation,
- control of the AGLC through the PRR in conjunction with the ECMU1,
- control and protection of the APU generator and the network.
APU ECB ensures the speed regulation. At 95 % RPM, the ECB provides an APU ready signal to the control part of the GAPCU.
AGLC CONTROL AND MONITORING:
The AGLC connects the APU GEN to the Transfer Circuit. It is controlled and monitored by the GAPCU and the ECMU 1. The position of the AGLC is monitored by the FAULT legend on the APU GEN P/BSW.

EXT PWR CONTROL BOARD

FUNCTIONS:

The GAPCU controls and monitors EXT PWR contactors and relays.
When EXT PWR A and/or B are connected, the GAPCU performs the following functions:
- monitoring,
- interlock function,
- EPC control,
- protection function,
- FRU function for NBPT,
- BITE function,
- communication and interface.
The diagram shows the connection for External Power A.

MONITORING:

The GAPCU permanently monitors the quality of the delivered ground power.
At least one faulty parameter automatically disconnects the ground power from the transfer line (EPRR and EPC open).
The interlock system is also activated (Interlock Monitoring Relay (IMR) open) and the GPU is electrically disconnected from the aircraft.
The IMR enables a holding supply to be connected to the GPU line contactor.
It is not possible to connect a faulty power source to the network.

INTERLOCK:

The conditions for the IMR to be closed are:
- the 28 VDC control voltage from the GPU is within accepted limits (<42 VDC and <13 VAC),
- the delivered power quality, sensed at a Point Of Regulation (POR), is accepted by the Control and Protection Module.
The closed IMR connects 28 VDC via pin F to the GPU.
This interlock voltage acts as a holding supply for the GPU output contactor.
If the control voltage is not within the limits, the IMR opens to electrically disconnect the GPU and sends a signal to the valid external power interlock module to open the EPRR (EPC will open).
The closed IMR status is also sent to the valid EXT PWR (Valid EP) interlock circuit which will close the EPRR, provided the quality of the power voltage is accepted by the control and protection module.
For EXT PWR A, the green legend AVAIL illuminates.
For EXT PWR B, the green legend AVAIL illuminates.

EXTERNAL POWER CONTACTOR CONTROL:

The closed EPRR provides 28 VDC to the solenoid of the EPC.
As soon as the EXT PWR P/BSW is pressed, the ECMUs are notified that an external power is ready to be involved in an NBPT.

G7508471 - G3NT1T0 - FM24D200000002

For EXT PWR A, the blue legend ON illuminates.
For EXT PWR B, the blue legend AUTO illuminates.

PROTECTION:

The GAPCU has to be powered to allow APU or EXT PWR sources to be connected to the aircraft electrical network.
In case of a total GAPCU power supply failure, the BATTERY BUS will ensure the necessary supply to the GAPCU.
The GAPCU has a BACK UP module which contains software, in the case the GAPCU main operating software fails. The BACK UP module operates on the EXT PWR A side (board) in order to recover the availability of EXT PWR A. The BACK UP module is, in this case, supplied by the HOT BUS.

OVERVOLTAGE:

Overvoltage (OV) protection is accomplished by monitoring the highest phase at POR.
An OV condition exists when the highest phase voltage exceeds 130+/-1,5 VAC for at least 50 ms.
After an inverse time delay, the IMR and EPRR are tripped.

UNDERVOLTAGE:

Undervoltage (UV) is sensed in the same way as overvoltage.
An undervoltage condition exists when the lowest phase voltage is less than 101,5+/-1,5 VAC.
After a 4,5 second time delay max, the EPRR and the IMR are tripped.

OVERLOAD:

The internal CT senses the overload.
An Overload condition exists when the current is greater than 260+ -15 A on any phase for 10 seconds max.
The galley-shed relay sends a signal to the ECMUs and to the galley P/BSW.
The ECMUs reply by shedding galley loads, depending on the supply configuration faults.
If the overload condition persists for an additional 2 seconds, after the load shedding action by the ECMUs (galley switch FAULT legend on), the ECAM warnings are triggered and the message EXT PWR A (or B) OVERLOAD appears.
All galley loads must be shed by setting the galley P/B to OFF. The message GALLEY OFF appears.
If after galley shedding an overload is still detected, the overcurrent protection will be triggered after an inverse time delay: the IMR and EPRR are tripped.

OVERCURRENT:

The internal CT senses the overcurrent (OC).
An overcurrent condition exists when the current on any one phase exceeds 277 A.
Once an overcurrent situation is sensed, the GAPCU relays the information to the ECMU as network status information.

G7508471 - G3NT1T0 - FM24D200000002

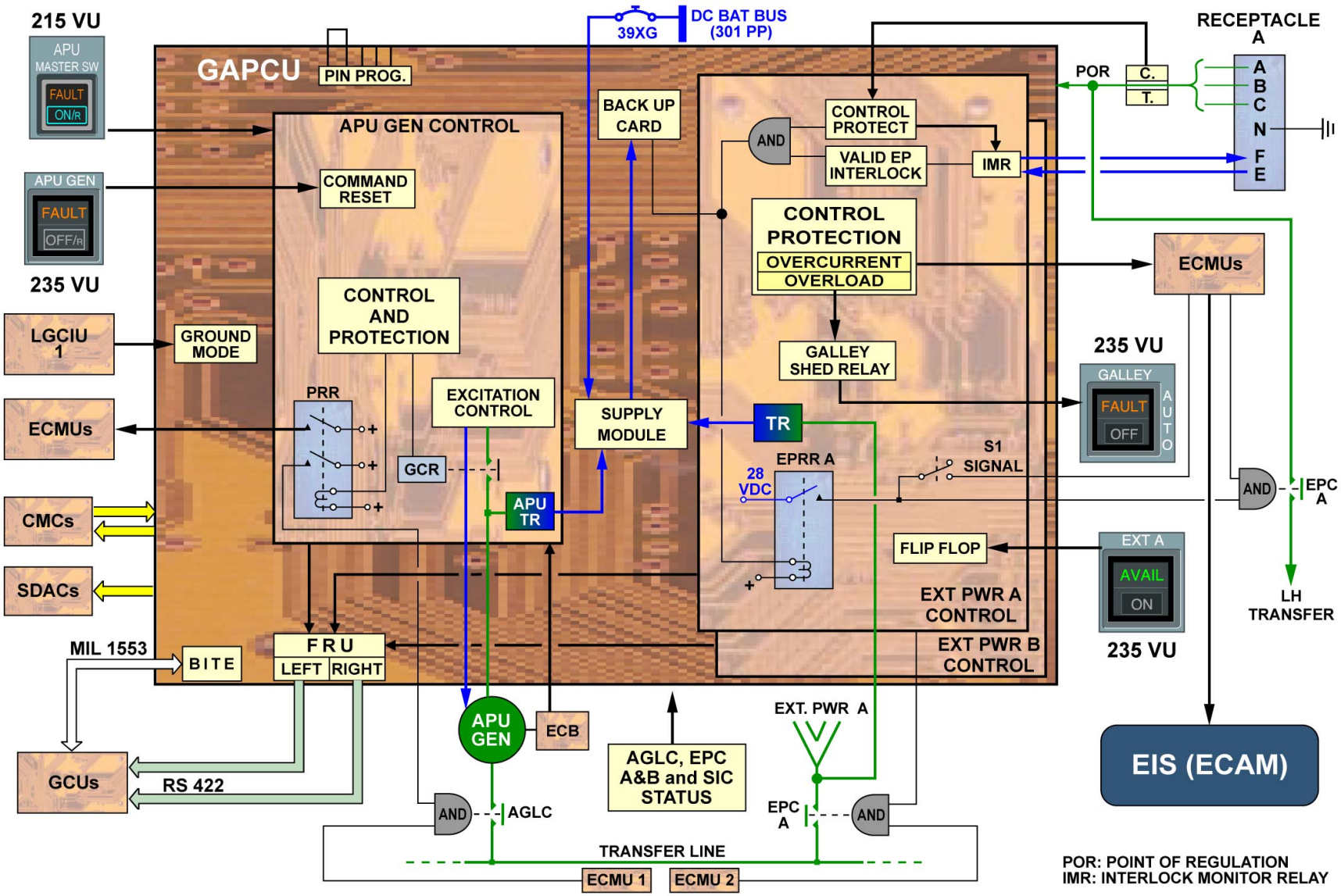

GAPCU DESCRIPTION - POWER SUPPLY ... EXT PWR CONTROL BOARD

G7508471 - G3NT1T0 - FM24D200000002

AUXILIARY AC GENERATION D/O (3)

APU GENERATOR

The APU generator is connected to the APU gearbox, which turns at 24000 RPM. The APU ECB will keep the speed constant through the control of the APU shaft speed via the APU gearbox (APU ECB controlling the APU fuel control unit).
The APU generator is cooled and lubricated by oil, which is supplied from the APU.
The oil flows through two ports (in and out), in its mounting flange.
The oil temperature is monitored by the temperature bulb, which is connected to the ECB. If oil temperature reaches 185 °C (365 °F), the ECB orders an APU shutdown.

APU GENERATOR CONTROL P/BSW

The APU GEN P/BSW has two stable positions.
In OFF position (released out):
- the white legend (OFF/R) comes on,
- the generator is de-energized and disconnected,
- the GAPCU is reset.

In ON position (pressed in):
- the OFF legend goes off,
- the generator is excited and connected if all parameters are correct.

The FAULT legend comes on amber if:
- the APU is running at a speed greater than 95% and one of the parameters is not correct,
- or AGLC stays open due to a failure.

To reset the GAPCU after a failure, the APU generator P/BSW must be set to OFF and then ON again.

NORMAL OPERATION

When the APU GEN P/BSW is set to ON and the APU starts running, an APU initialization signal (D signal) is sent to ECMU 1 and the PMG is active.

If the PMG frequency is greater than 335 Hz (above 95 %) and no protection functions is triggered (no anomaly), the GCR closes and the generator is excited.
ECMU1 generates a ground signal, depending on the priority logic and AIR/GROUND configuration.
On ground, the APU GEN control card sends the S1 signal required for a NBPT to the ECMUs. ECMU1 will synchronize the APU GEN output with the power source actually supplying the aircraft network.
The APU ready signal is sent from the ECB if all APU GEN parameters are correct. The PRR closes and connects 28 VDC to the AGLC and provides a ground signal to ECMU 1.
The AGLC closes and connects the APU generator to the transfer circuit according to the supply priority logic.
The AGLC is controlled and monitored by the GAPCU and ECMU1.
The GAPCU monitors the AGLC and ECMU 1 controls its operational state (open or close).

G7508471 - G3NT1T0 - FM24D200000002

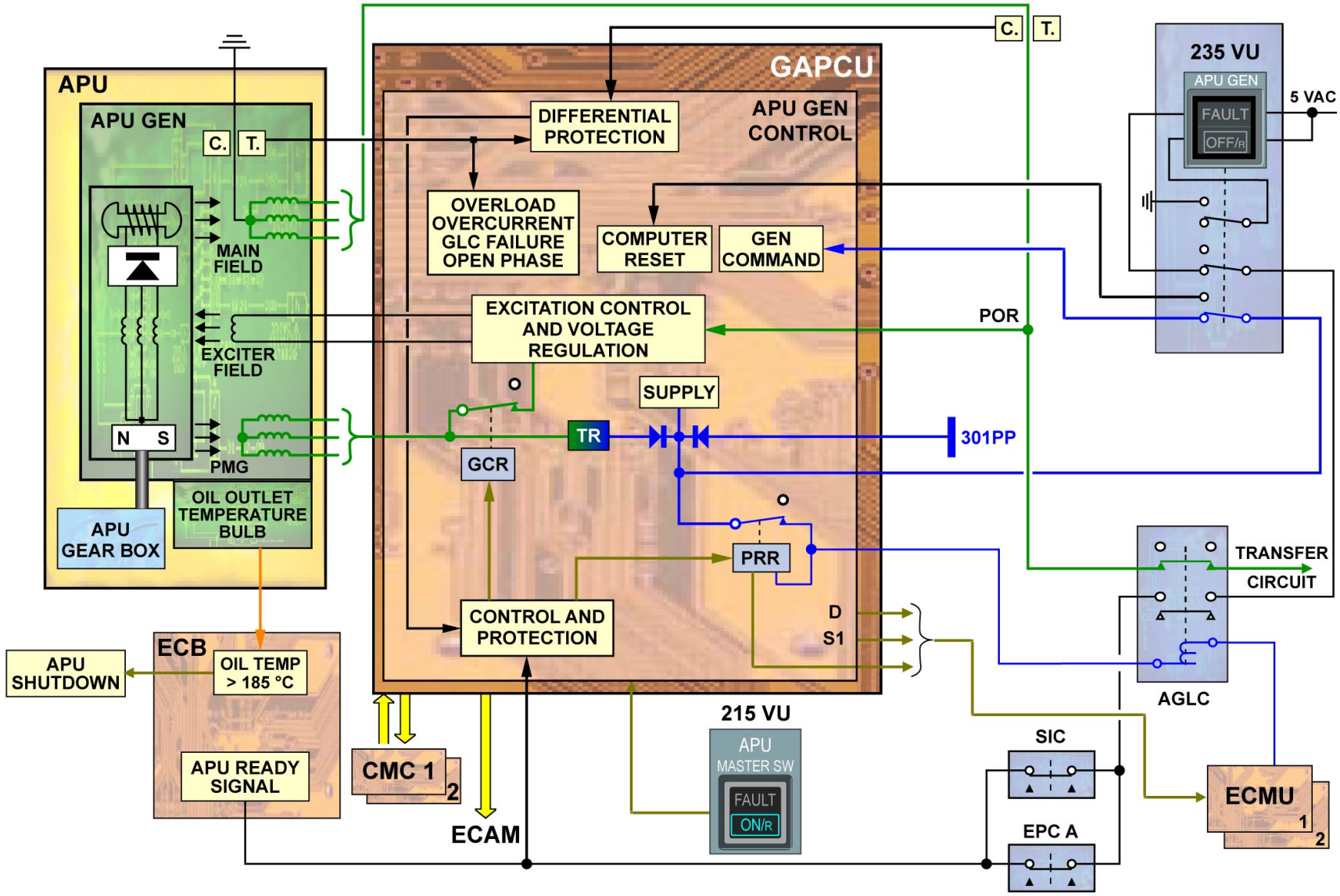

APU GENERATOR - APU GENERATOR CONTROL P/BSW & NORMAL OPERATION

G7508471 - G3NT1T0 - FM24D200000002

AUXILIARY AC GENERATION D/O (3)

APU GENERATOR (continued)

ABNORMAL OPERATION

The internal CT of the APU GEN monitors the main feed output current (all phases). This CT permanently transmits its output value to the differential protection module of the GAPCU.
A similar monitoring is done on the feeder line upstream of the AGLC.
In the case of abnormal current detection, the differential protection module activates the control and protection module.
The GCR and PRR open. The generator is disconnected and de-energized and the AGLC is open.
A failure message is sent to the CMCs, and to the ECAM via the SDACs for ECAM operational information.
The FAULT legend on the APU GEN P/BSW comes on amber. Note that the FAULT legend also comes on if the AGLC stays open due to a system failure.
To reset the GAPCU after a failure, the APU GEN P/BSW must be set to OFF and then pressed IN again.

G7508471 - G3NT1T0 - FM24D2000000002

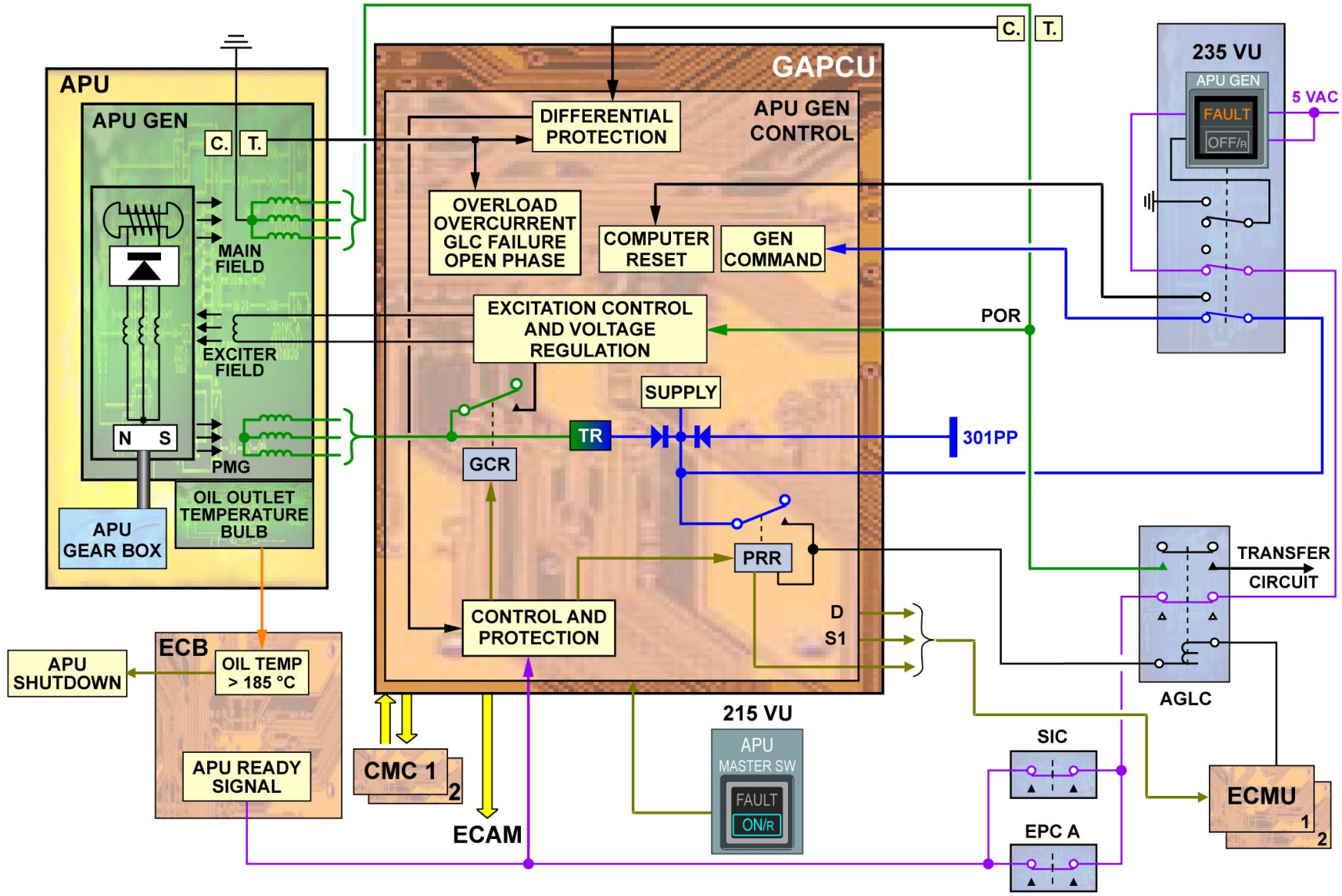

APU GENERATOR - ABNORMAL OPERATION

G7508471 - G3NT1T0 - FM24D200000002

AUXILIARY AC GENERATION D/O (3)

EXTERNAL POWER

NORMAL OPERATION - EXT PWR CONNECTED AVAIL

The GAPCU controls the electrical connection or disconnection of the external A and B GPU.
This control is provided by two internal relays:
- the IMR,
- the EPRR.

The IMR, when energized, connects a holding supply to the GPU: when the external DC input voltage is lower than 42 VDC, or the external power A (B) channel fault signal is absent.
The EPRR is energized when the GPU is properly connected and all parameters are correct (no protection functions triggered).
As soon as the ground power unit A (B) is connected, the GAPCU analyzes the voltage delivered to the external power receptacle. If all parameters are correct, the GAPCU triggers the following:
- illumination of the green AVAIL legend of the EXT A (B) P/BSW, located in the overhead ELEC panel,
- illumination of the amber EXT PWR A (B) AVAIL indicator and the white EXT PWR A (B) NOT IN USE indicator, located on the EXT PWR panel 925VU, as long as no EXT PWR is connected to the aircraft network (EXT PWR available but not in use).

A light test function on the EXT PWR panel 925VU is used to test the EXT PWR A (B) AVAIL and the EXT PWR A (B) NOT IN USE indicator.
The closed EPRR connects power from the TR via the Positive Temperature Circuit (PTC) to the busbar 104XG in order to supply the following items:
- to the solenoid of EPC A,
- to the EXT PWR A NOT IN USE light via contactor 6XX (maintenance bus switch off),
- to the EXT PWR A AVAIL light,
- to the solenoids of relays 25XG and 9XG EXT PWR A P/BSW light and status message to ECMUs.

When no anomaly is detected, relay 25XG closes and controls the 5 VAC supply for the AVAIL legend from the internal power supply module.

G7508471 - G3NT1T0 - FM24D200000002

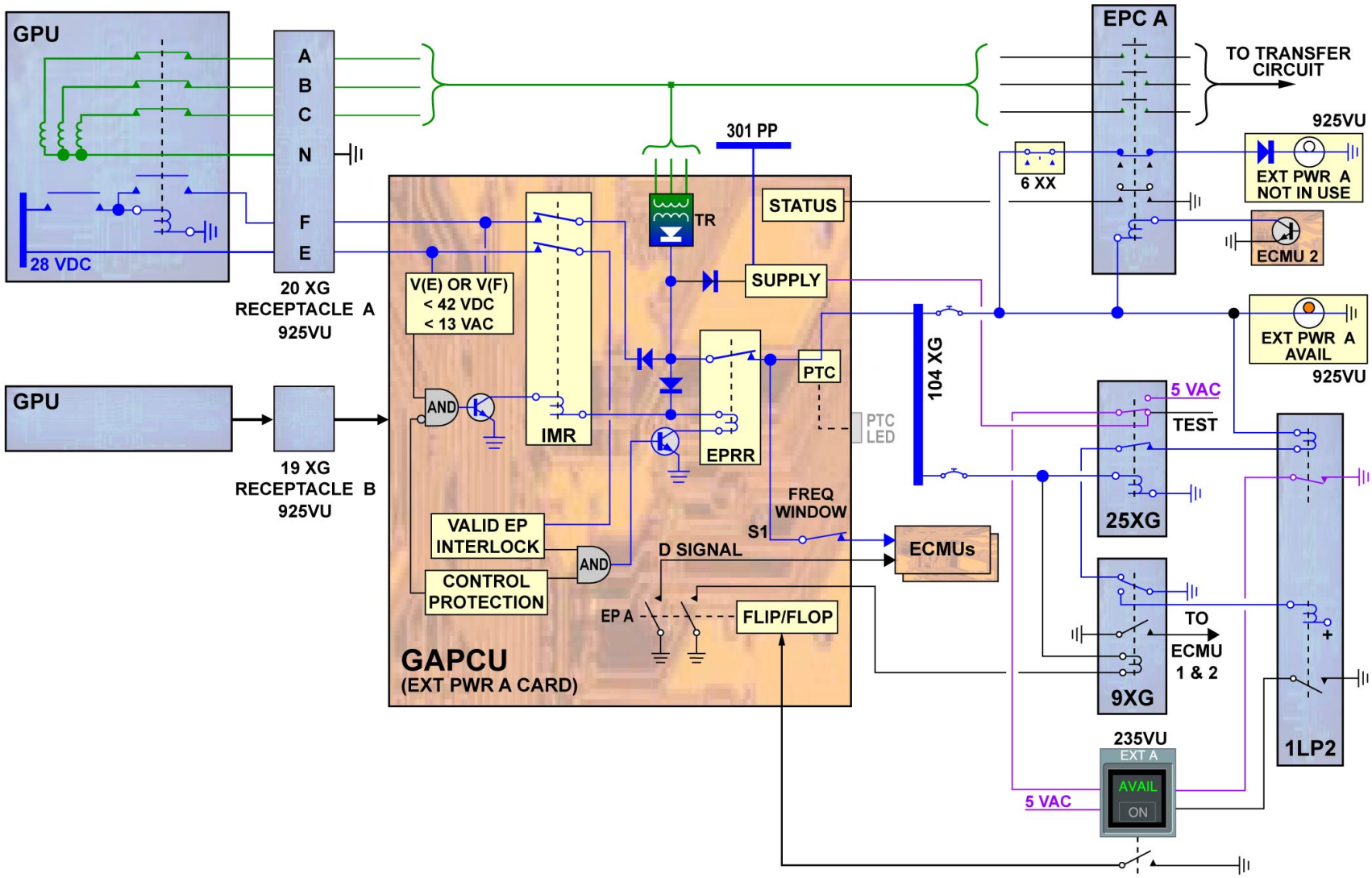

EXTERNAL POWER - NORMAL OPERATION - EXT PWR CONNECTED AVAIL

G7508471 - G3NT1T0 - FM24D200000002

AUXILIARY AC GENERATION D/O (3)

EXTERNAL POWER (continued)

NORMAL OPERATION - EXT PWR ON

When the EXT PWR P/BSW is pressed, the flip-flop provides the D signal to both ECMUs for NBPT function, and a ground signal to the solenoid of relay 9XG. The closed relay 9XG cuts the supply for the AVAIL legend and illuminates the ON (AUTO for EXT PWR B) legend via 1LP2.
Then ECMU2 provides a ground signal to close the EPC A, provided the S1 signal for NBPT function is valid.
The GPU output is now connected to the transfer circuit.
The EXT PWR NOT IN USE light, on 925VU, goes off.
The connection of the ground power to the bus bars depends on the supply and transfer logic.

G7508471 - G3NT1T0 - FM24D200000002

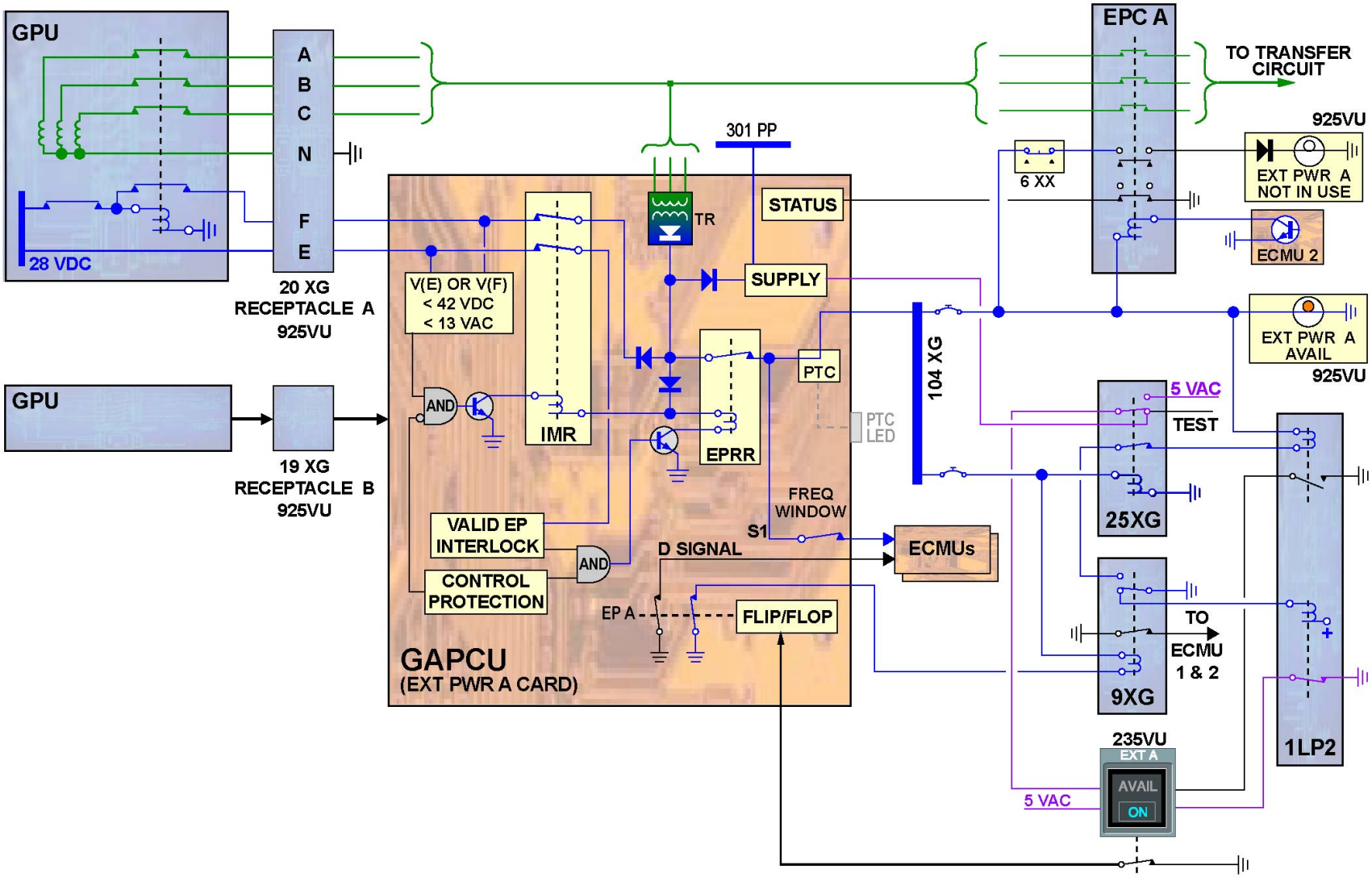

EXTERNAL POWER - NORMAL OPERATION - EXT PWR ON

G7508471 - G3NT1T0 - FM24D200000002

AUXILIARY AC GENERATION D/O (3)

EXTERNAL POWER (continued)

ABNORMAL OPERATION

An internal feature called the Positive Temperature Circuit (PTC) protects bus bar 104XG.
This PTC will act as a protective circuit, reacting by heat dissipation to any sensed overcurrent.
In case of protection activation (overcurrent detection), the PTC activates the PTC LED and de-energizes busbar 104XG. The function is self-reset when the over current condition no longer exists.
In the event of total GAPCU internal failure, with total loss of the control and protections, a back-up control module ensures the following basic functions, while the aircraft is on ground and EXT PWR A is connected:
- cabin lighting operation for the passenger disembarking,
- ground service systems availability (eg: cargo loading system,...).
The BACK UP module enables the GAPCU to operate in downgraded operating mode.
The BACK UP mode is only valid for EXT PWR A.

G7508471 - G3NT1T0 - FM24D200000002

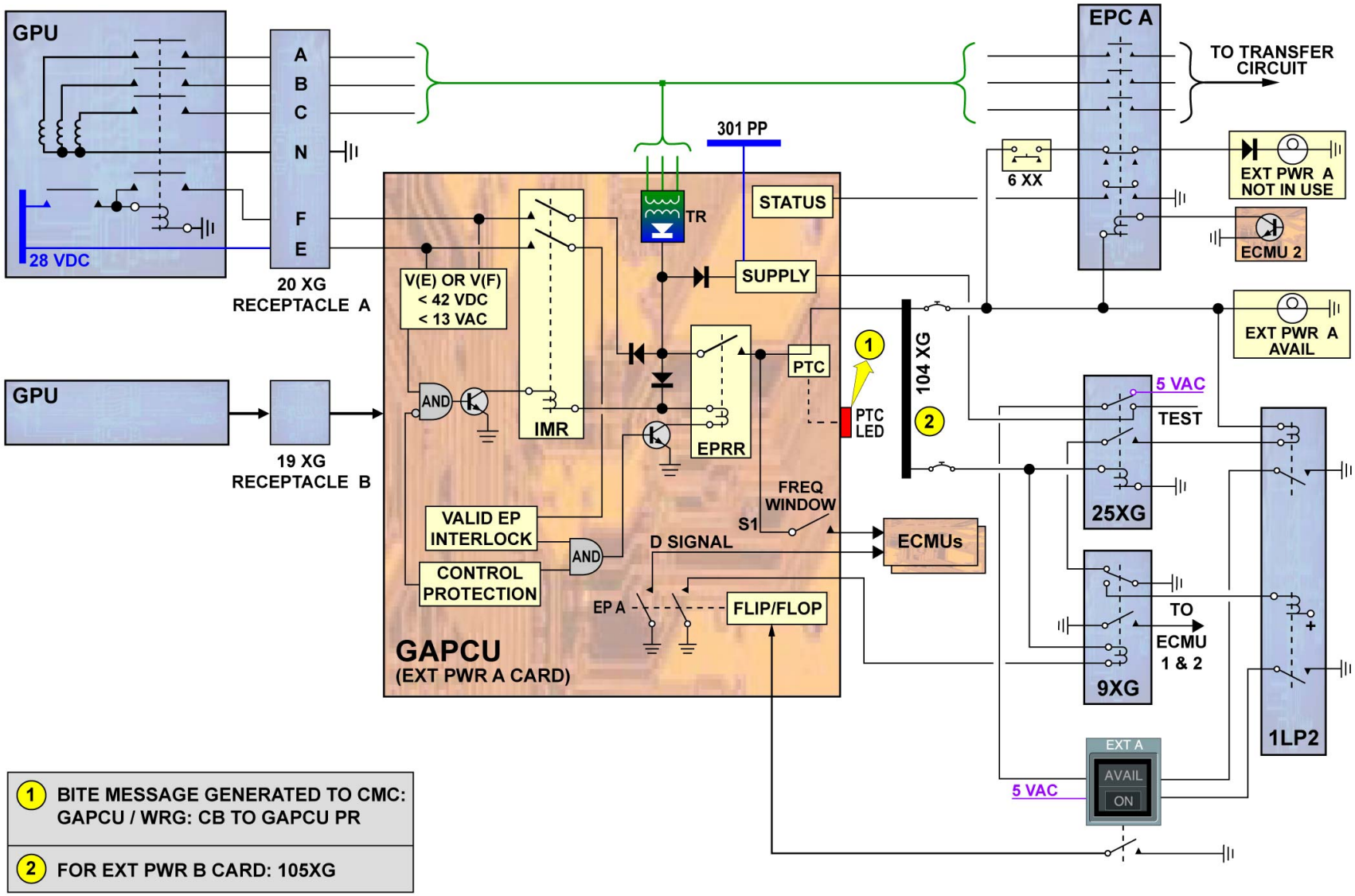

EXTERNAL POWER - ABNORMAL OPERATION

G7508471 - G3NT1T0 - FM24D200000002

EMERGENCY AC GENERATION D/O (3)

GENERAL

The AC emergency generation system is used to restore the power supply to the AC and DC ESSential network in case of loss of AC main buses. When main AC buses are lost. This is called the emergency electrical power configuration.

NOTE: For A340, the main AC buses are AC bus 1-1 and AC bus 2-4. For A330, the main AC buses are AC bus 1 and AC bus 2.

CSM/G

The Constant Speed Motor Generator (CSM/G) consists of a hydraulic motor that drives an 115 V, 400 Hz, 3 phase AC GENerator.
The CSM/G is powered by the Green Hydraulic System that is normally pressurized by the engine driven hydraulic pumps or by the Ram Air Turbine (RAT). Engine 1 and 4 pumps pressurize the Green Hydraulic System for the A340. Engine 1 and 2 pumps pressurize it for A330.

CSM/G GCU

The CSM/G is controlled and monitored by the CSM/G Generator Control Unit (GCU), and provides the AC power to the AC ESS network and DC power through the ESS Transformer Rectifier (TR) to the DC ESS network.

CONTROL AND LOGIC

The CSM/G can be started manually or automatically. The supply logic differs according to the CSM/G supply and the aircraft configuration.

AUTOMATIC CONTROL

The CSM/G is automatically started when the two main AC buses are lost. As soon as AC main busbars are lost (contactor 3XC / AC ESSential Bus Switching Contactor is de-energized), the start up sequence is initiated by the generation of a DC signal (discrete) from the CSM/G control logic to the GCU.
The CSM/G is then supplied by the green hydraulic system and begins to run.
When the nominal CSM/G voltage and frequency are reached, the CSM/G GCU closes the EMERgency Generator Line Contactor (EMER GLC - 2XE) to connect the CSM/G to the AC and DC ESS network.

SUPPLY LOGIC

When the CSM/G is powered by either engine driven green system hydraulic pump, it remains operating until the end of the flight.
When the CSM/G is powered by the RAT hydraulic pump, the electrical load is automatically reduced.
The reduction of the electrical load is accomplished by the opening of the contactor 16XH for AC ESS BUS SHEDdable 401XP and contactor 1PH for the DC ESS BUS SHED 8PP to remove power to these busses. The CSM/G stops when the slats are extended.
When the CSM/G stops due to slat extension, the two main BATteries supply the DC ESS BUS 4PP and, via the STATic INVerter, the AC ESS BUS 9XP until the end of the flight.

MANUAL CONTROL

If the automatic control fails, the CSM/G can be manually started by depressing the momentary MANual ON P/BSW located on the EMERgency ELECtrical PoWeR panel on panel 211VU. When CSM/G is manually started, it has priority over on the other main AC sources (GENs, APU GEN...) on the AC and DC ESS network.

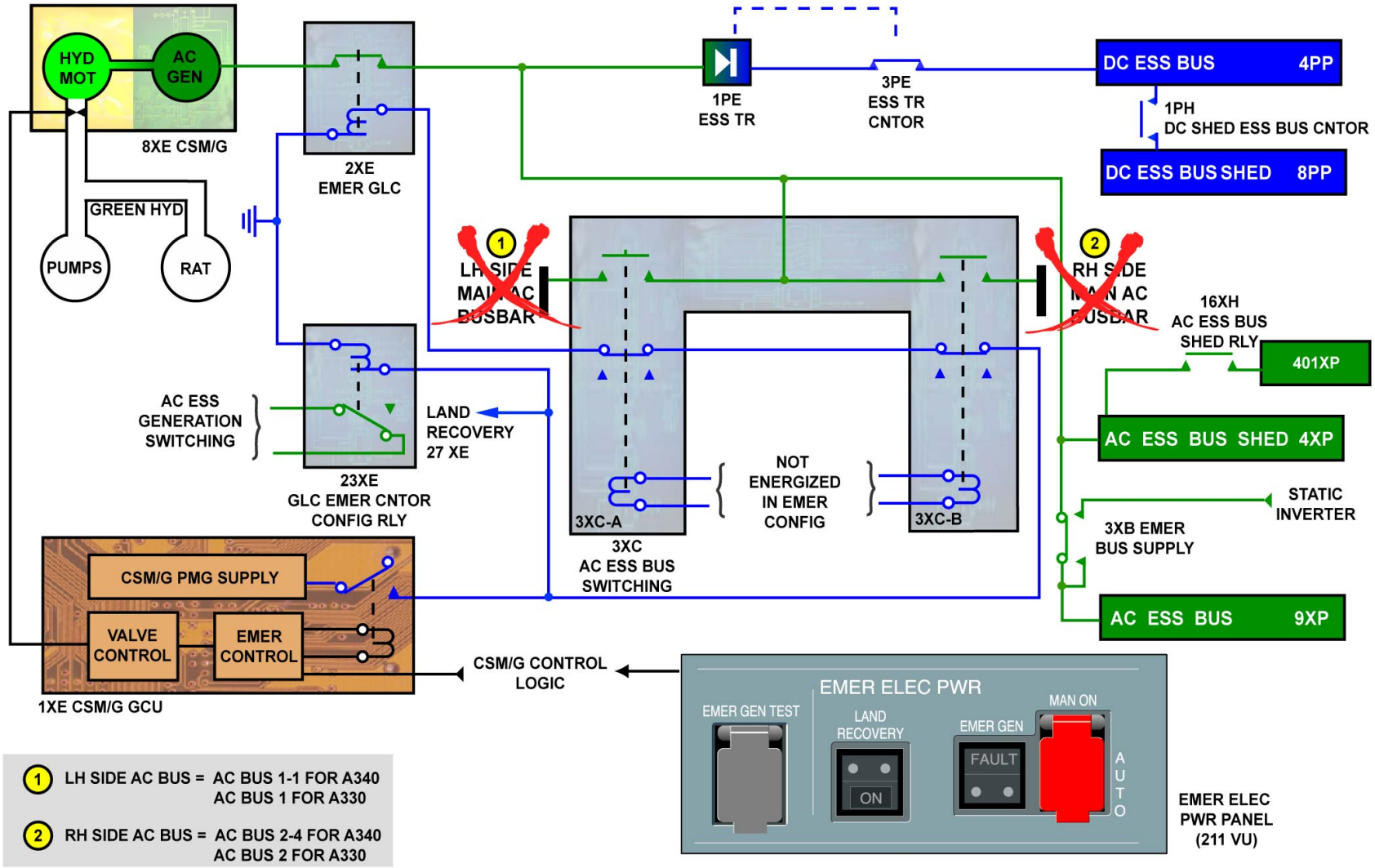

GENERAL & CONTROL AND LOGIC

G7508471 - G3NT1T0 - FM24D300000002

EMERGENCY AC GENERATION D/O (3)

CSM/G

The CSM/G is composed of a Constant Speed hydraulic Motor (CSM) and an 115 V, 400 Hz, 3 phase AC GENerator.

CONSTANT SPEED MOTOR

The CSM is an hydraulic motor that drives a GEN. The CSM is controlled by a solenoid control valve and a servo valve.
The solenoid control valve allows the hydraulic power to run the CSM. It is also used for the hydraulic power isolation (shutoff valve) from the CSM when not used and to stop the CSM/G in the event of failure detected by the GCU protection module.
The servo valve is controlled by the CSM/G GCU speed regulation circuit and regulates the flow of the Green hydraulic fluid to maintain a constant speed for the EMER GEN.

AC GENERATOR

The AC Generator consists of three stages:
- a main generator,
- an exciter,
- a Permanent Magnet Generator (PMG).

G7508471 - G3NT1T0 - FM24D300000002

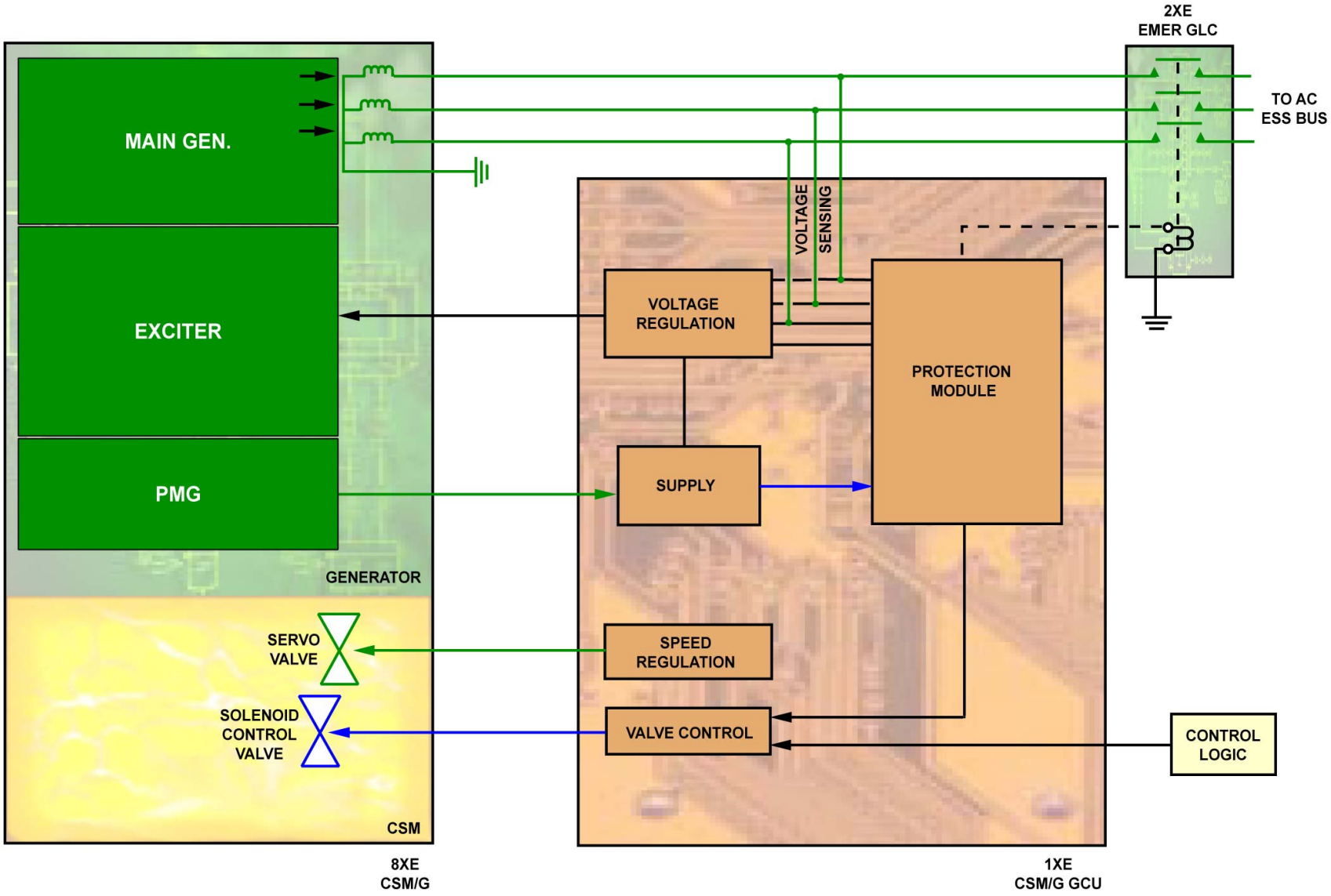

CSM/G - CONSTANT SPEED MOTOR & AC GENERATOR

G7508471 - G3NT1T0 - FM24D300000002

EMERGENCY AC GENERATION D/O (3)

CSM/G (continued)

AUTOMATIC CSMG START AND MAN START

The CSM/G is automatically started when the two main AC buses are lost; the aircraft is in flight (Nose Landing Gear not compressed) and the HOT BATTERY BUS 701PP is supplied. A DC signal (discrete) is sent to the CSM/G control circuit of the CSM/G GCU.
If the automatic start fails, the CSM/G can be started manually by pressing the momentary red guarded MAN ON P/BSW located on the overhead EMER ELEC PWR control panel on panel 211VU.
Note that if the MAN ON P/BSW is pressed in normal configuration (normal AC and DC electrical network powered), the CSM/G starts and is connected to the AC and DC ESS network due to the priority of the CSM/G on the AC and DC ESS network. The CSM/G will operate until shutdown of ENG's 1 and 2 for A330 (N2 <50%), or of ENG's 1 and 4 for A340 (N2 <50%).

G7508471 - G3NT1T0 - FM24D3000000002

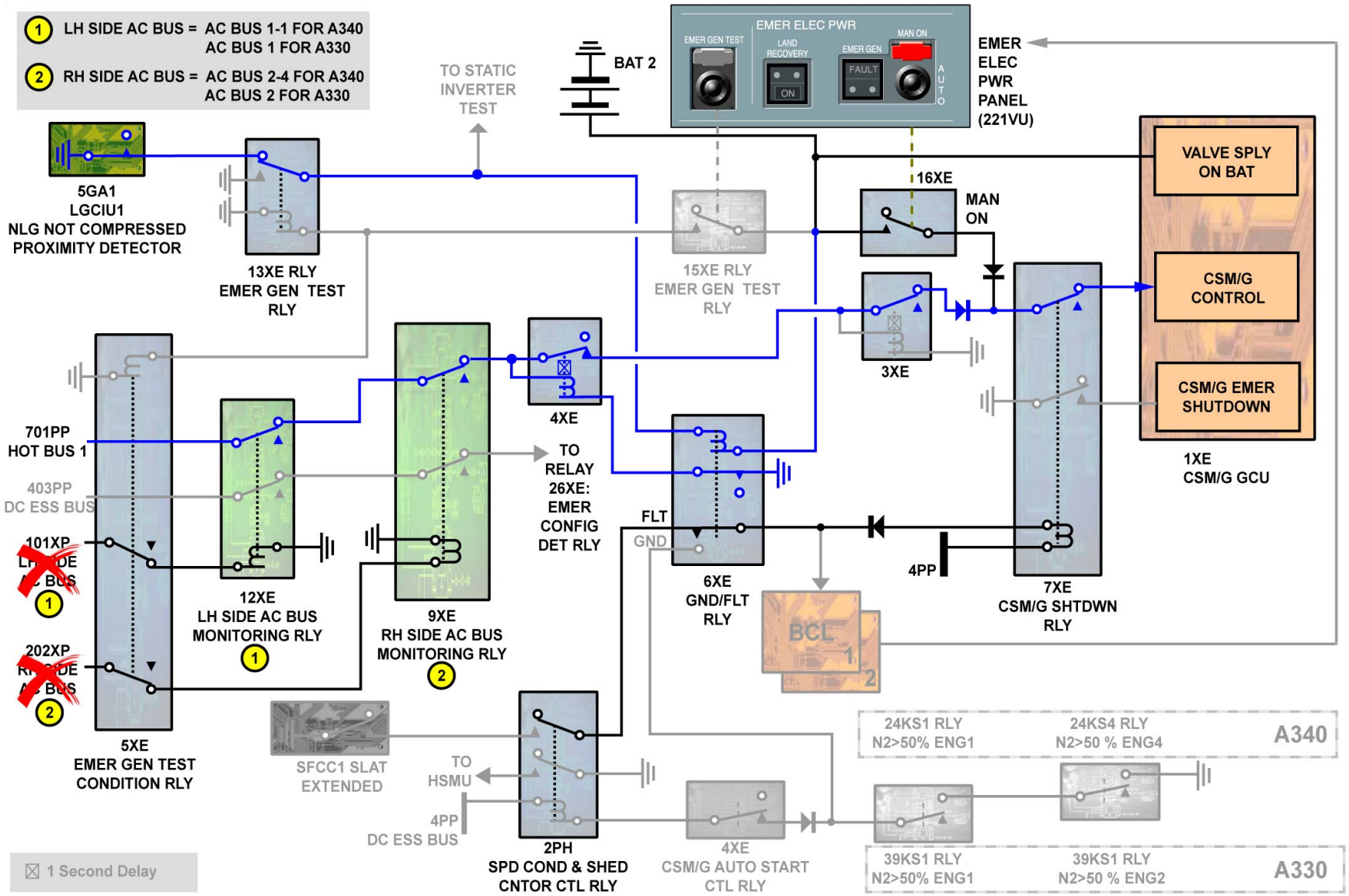

CSM/G - AUTOMATIC CSMG START AND MAN START

G7508471 - G3NT1T0 - FM24D300000002

EMERGENCY AC GENERATION D/O (3)

CSM/G (continued)

CSMG SHUTDOWN ON GND ENGINES OFF

After landing, with the CSM/G not supplied by the RAT, the CSM/G is switched off as soon as both ENG's N2 are < 50% (ENG's 1 and 2 for A330, 1 and 4 for A340).
The shutdown signal is also sent to the EMERgency ELECtrical PoWeR panel on the overhead panel, the EMER GEN FAULT light comes on.
Relay 26XE (EMER PWR SuPpLY) provides an electrical power emergency configuration signal to:
- the cargo compartment ventilating and heating system,
- the emergency lighting system,
the navigation system (VOR 1 or ADF 1 avail on Digital Distance and Radio Magnetic Indicator (DDRMI)).

G7508471 - G3NT1T0 - FM24D3000000002

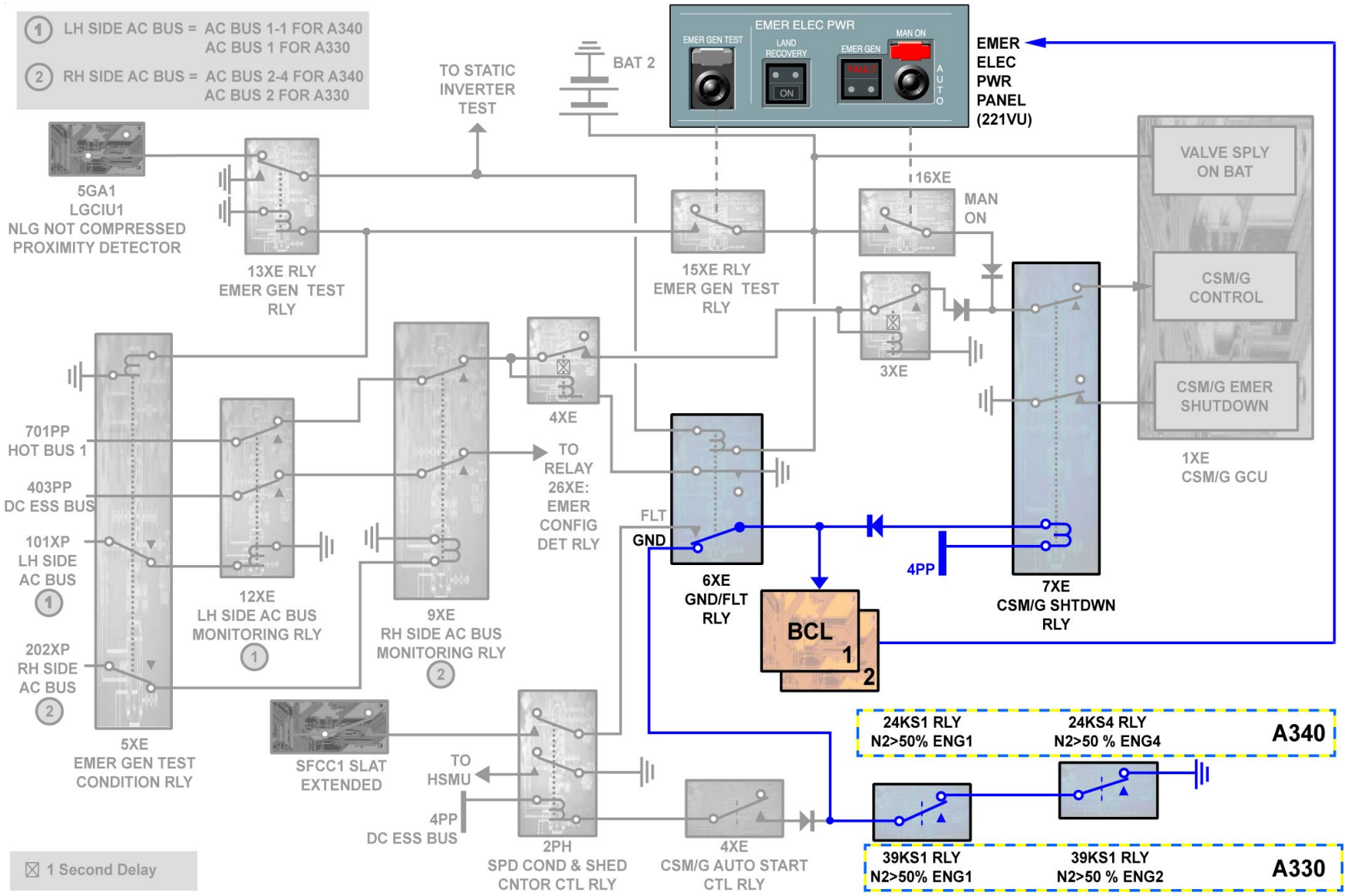

CSM/G - CSMG SHUTDOWN ON GND ENGINES OFF

G7508471 - G3NT1T0 - FM24D300000002

EMERGENCY AC GENERATION D/O (3)

CSM/G (continued)

RAT EXTENSION UNTIL SLATS EXTENDED CSMG OPS

The control logic circuit of the Hydraulic System Monitoring Unit (HSMU) performs the RAT extension depending on the following parameters:
- type of A/C (A330 or A340),
- flight conditions,
- when A/C speed is above 100 kts.

If the CSM/G is supplied by an engine driven green system hydraulic pump (determined by ENG's 1 and 2 N2 > 50% for A330, ENG's1 and 4 N2 > 50% for A340), the CSM/G supplies the AC and DC ESS network until ENGs' are shutdown (N2 < 50%). If the RAT is supplying green system hydraulics and the slats are extended, the Slats and Flaps Control Computer (SFCC) provides a discrete signal by closing relay 7XE (CSM/G SHuTDoWN ReLaY), which supplies a ground to the CSM/G GCU EMER shutdown and removes the CSM/G control discrete, to shutdown the CSM/G by closing the solenoid valve of the CSM/G.

G7508471 - G3NT1T0 - FM24D300000002

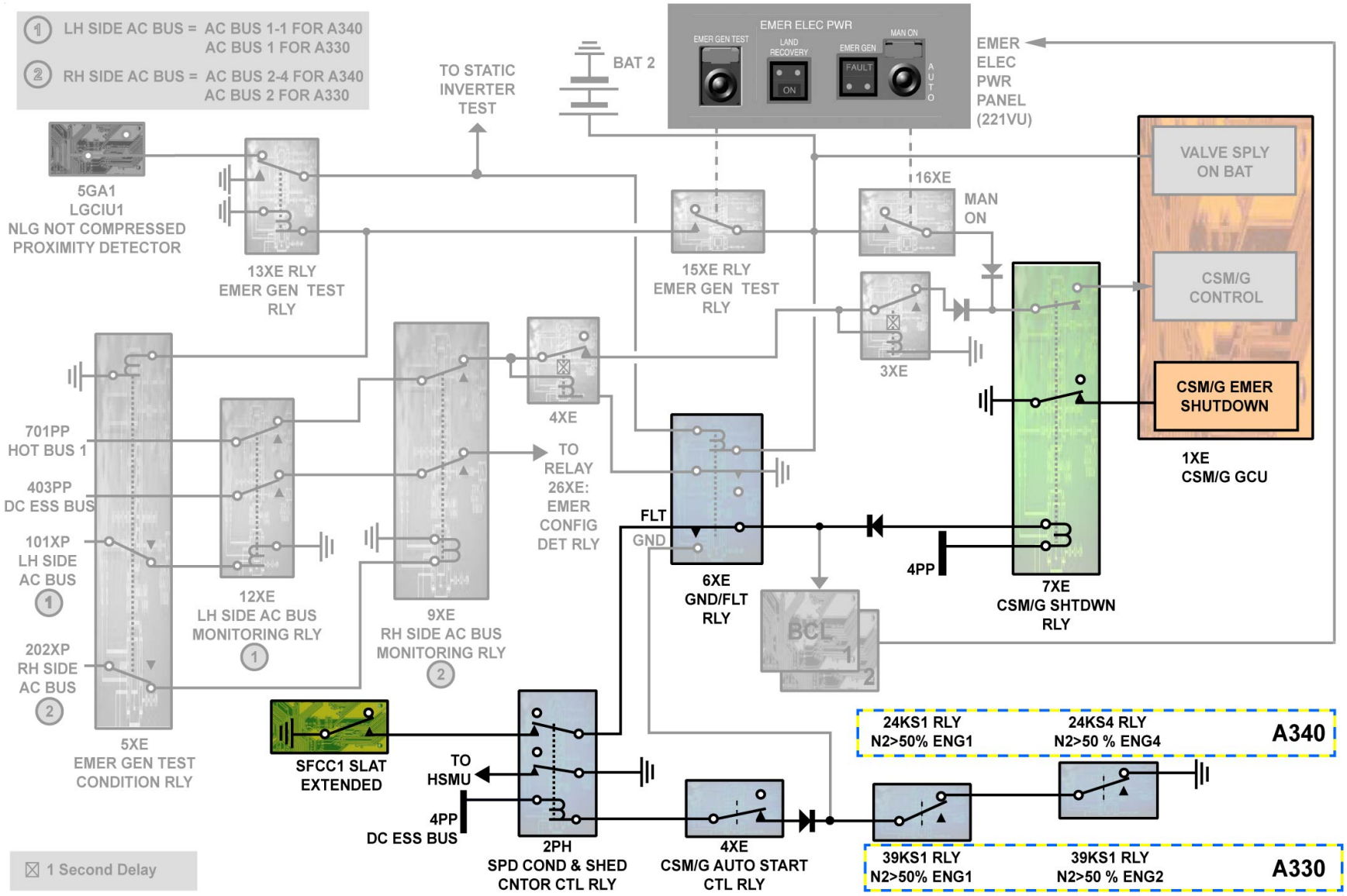

CSM/G - RAT EXTENSION UNTIL SLATS EXTENDED CSMG OPS

G7508471 - G3NT1T0 - FM24D300000002

EMERGENCY AC GENERATION D/O (3)

CSM/G (continued)

CSMG TEST

To test the EMER GEN on ground, the green hydraulic system must be pressurized by the green electric pump. Then the EMER GEN TEST P/BSW must be pressed and held.
This closes relay 13XE that simulates flight configuration.
Relay 15XE (EMER GEN TEST CONDITION RLY) is energized to simulate loss of AC BUS 1 and AC BUS 2 for A330, of AC BUS 1-1 and AC BUS 2-4 for A340.
Relay 6XE (GND/FLT RLY) is energized (flight configuration).
Note: slats must be retracted.
The CSM/G control circuit is activated, as long as the EMER GEN test P/BSW is pressed in and held, the EMER GEN operates and is connected to the AC and DC ESS network. The operation of the EMER GEN and the connection to the AC and DC ESS network is observed on the AC ELEC ECAM page.
During the test, the RAT extension signal is inhibited by the HSMU.

G7508471 - G3NT1T0 - FM24D300000002

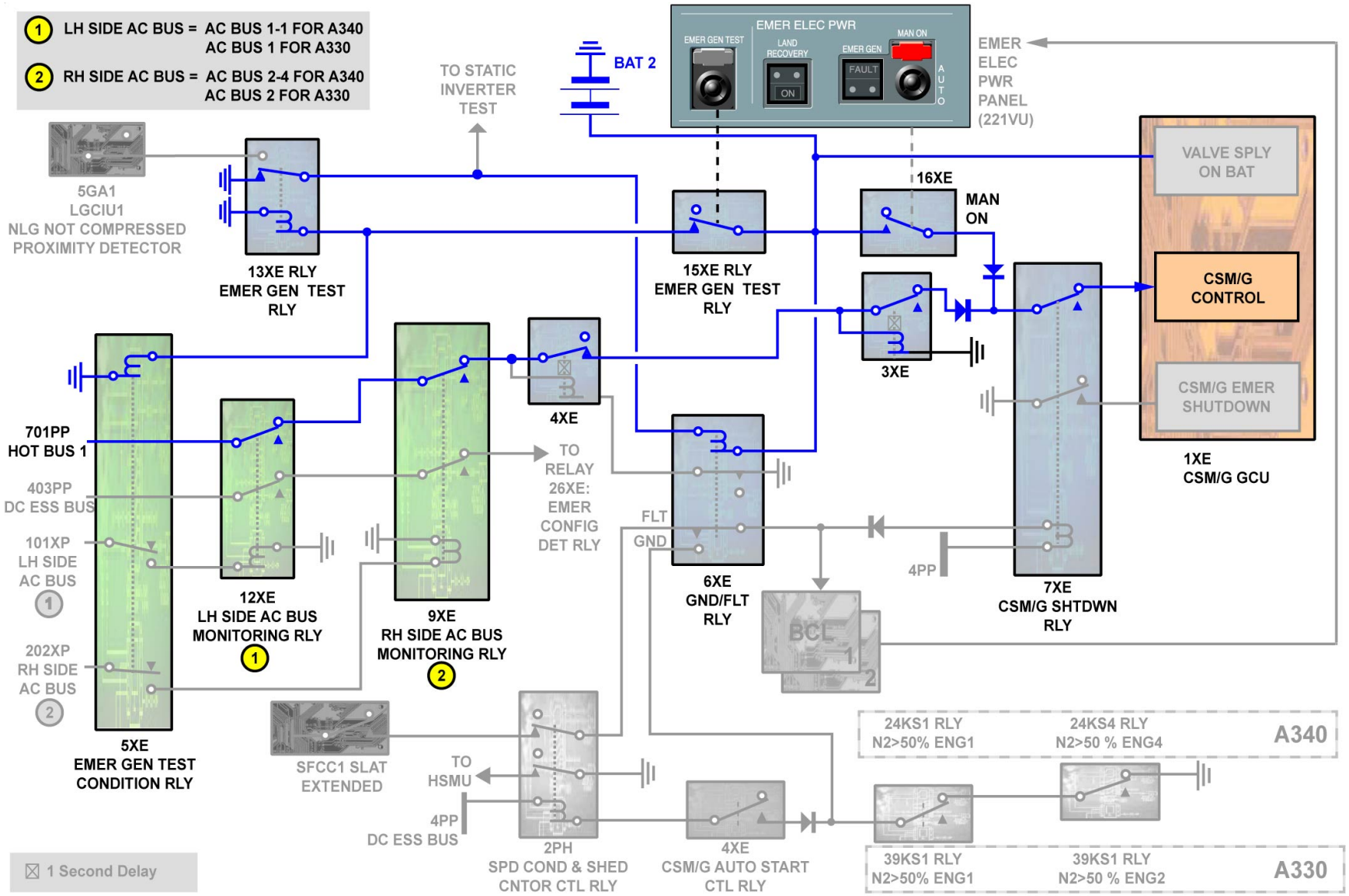

CSM/G - CSMG TEST

G7508471 - G3NT1T0 - FM24D300000002

EMERGENCY AC GENERATION D/O (3)

COMPONENT STATIC INVERTER

The objective of this topic is to describe the operation, monitoring and test of the STATic INVerter.

NORMAL CONFIGURATION

The STAT INV converts the direct current from the BATs into a single phase alternating current. The STAT INV is not operational as long as the ESS network is supplied from normal AC power or EMER GEN power.

NOTE: Notice the STAT INV supplies only the AC ESS BUS.
The STAT INV only operates on ground, when the BATs are the only power supply source with the BAT1 and BAT2 P/BSWs pressed in.
The STAT INV only operates in flight, when no AC source is available (AC buses and CSM/G not available).
These are the main electrical characteristics of the STAT INV:
- Power: 2.5 KVA,
- Frequency: 400 Hz,
- Voltage: 115 V,
- Phase: 1.

EMERGENCY CONFIGURATION

In EMER configuration (AC buses not available), the STAT INV operates automatically in the following cases:
- when the CSM/G is not available (at slat extension with RAT extended) and the aircraft speed above 50 Kts,
- at landing with aircraft speed lower than 50 Kts and both BAT1 and BAT2 P/BSW's pressed in and CSM/G not available.

MONITORING

The parameters (400 Hz and 115 V) of the STAT INV are displayed on the ECAM ELEC AC page. The STAT INV is monitored for:
- fan failure,
- Overheat: temperature higher than 110 ºC,
- output Over Voltage: voltage higher than or equal to 130+/- 1.5 V,
- output Under Voltage: voltage lower than or equal to 100+/- 4 V,
- output Under / Over Frequency 400 Hz +/- 80 Hz (only for A330).

In case of failure, the STAT INV generates a signal for the System Data Acquisition Concentrators (SDACs), which generates a STAT INV FAULT amber caution message on the ECAM E/WD.
Notice that in case of output over voltage, overheat or 28 VDC BAT supply not present, the STAT INV will not operate. However, the STAT INV will continue to operate with an under frequency or over frequency output, under voltage output or a fan failure.

TEST

The following conditions are required to perform a STAT INV test:
- all main AC buses not supplied,
- BAT P/BSW's (235VU) in OFF position,
- green hydraulic system not pressurized (to prevent CSM/G starting).

To perform the STAT INV test, the EMER GEN TEST P/BSW (15XE on 211VU) must be pressed and held in. This simulates "aircraft in flight" condition.
Under these conditions, the contactors 2PC (CoNTactOR ESS BUS/STAT INV SPLY) and 3PC (CNTOR ESS BUS/STAT INV SPLY) are closed and the BATs 1 and 2 are directly connected in parallel to the STAT INV and also to the DC ESS BUS.
The STAT INV parameters have to be checked on the ECAM AC ELEC page.

G7508471 - G3NT1T0 - FM24D300000002

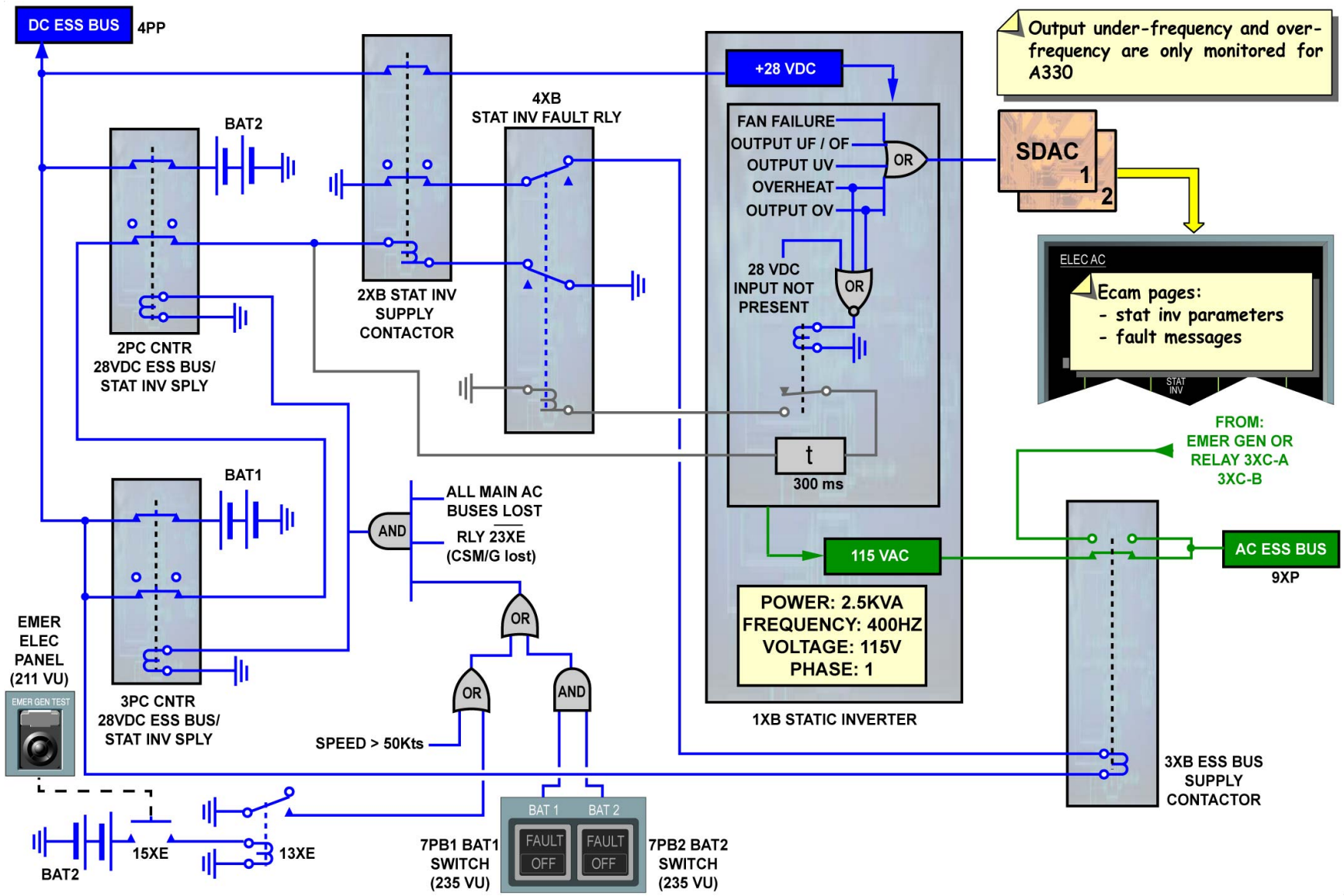

COMPONENT STATIC INVERTER - NORMAL CONFIGURATION ... TEST

EMERGENCY AC GENERATION D/O (3)

AC ESSENTIAL GENERATION SWITCHING

This topic presents the supply and interfaces of the AC ESS generation switching.

NORMAL SUPPLY AND INTERFACES

Contactor 3XC-A (AC ESS BUS SWiTchinG CNTOR) is energized under several conditions:
- LH side main AC busbar is supplied (AC BUS 1 for A330, AC BUS 1-1 for A340),
- 3XC-B (AC ESS BUS SWTG CNTOR) is in de-energized position (EMER GEN not operative),
- relay 23XE (EMER GLC CNTOR CONFIG RLY) and contactor 2XE (EMER GLC CNTOR) not energized (EMER GEN not operative),
- AC ESS FEED P/BSW (4XC on panel 235VU) in normal position (pressed in).

The status of AC ESS BUS SWITCHING contactors 3XC-A and 3XC-B ,the position of the AC ESS FEED P/BSW (4XC) and the AC source supplying the AC ESS network are sent to the SDACs for display on the AC ELEC ECAM page.

G7508471 - G3NT1T0 - FM24D300000002

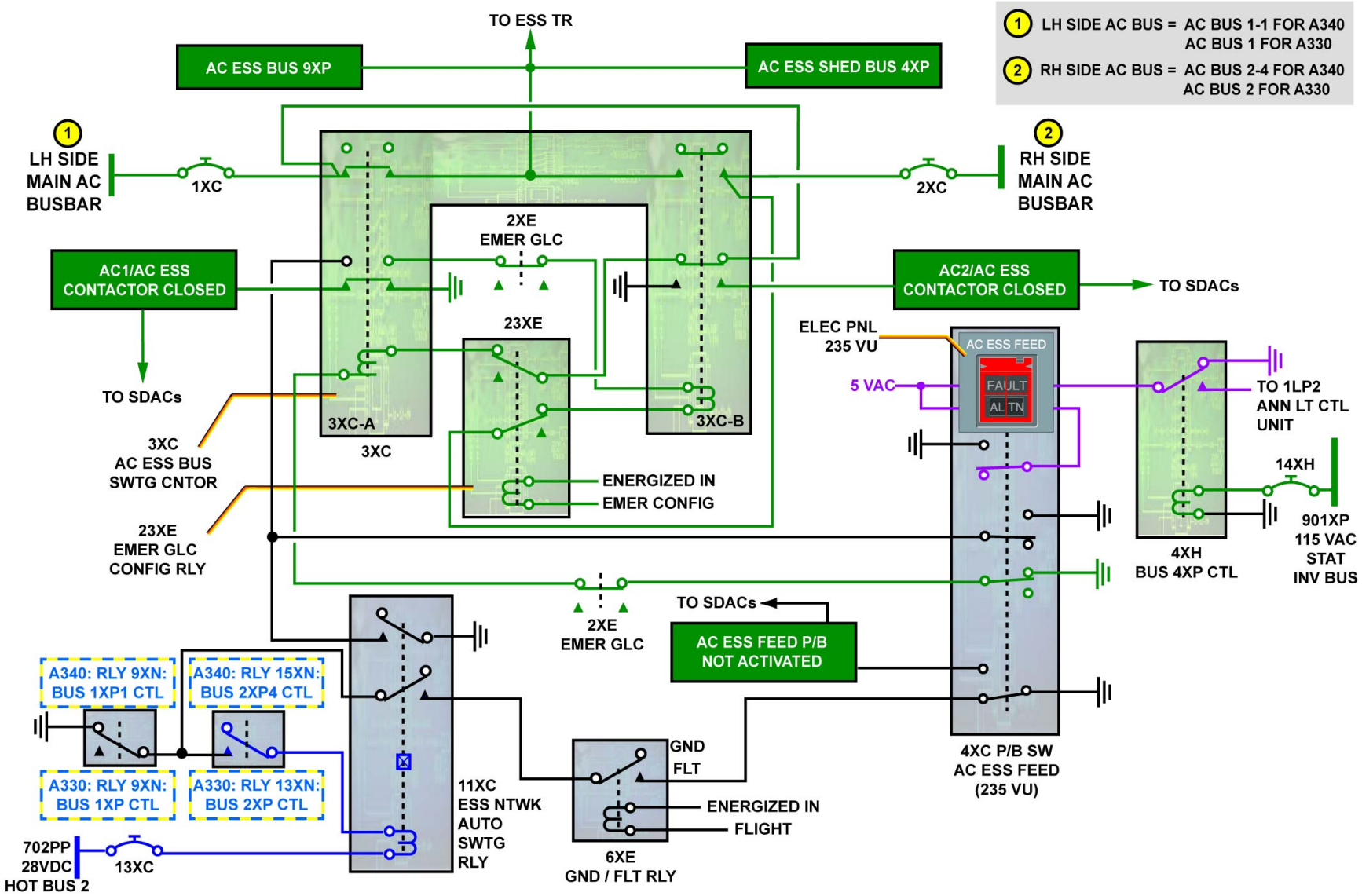

AC ESSENTIAL GENERATION SWITCHING - NORMAL SUPPLY AND INTERFACES

G7508471 - G3NT1T0 - FM24D300000002

EMERGENCY AC GENERATION D/O (3)

AC ESSENTIAL GENERATION SWITCHING (continued)

ABNORMAL AUTOMATIC SUPPLY

Automatic switching is performed in flight and on ground if the AC ESS FEED P/BSW (4XC on panel 235VU) is pressed in (normal position).
As soon as LH side main AC bus (AC BUS 1 for A330, AC BUS 1-1 for A340) is not supplied, the following events occur:
- contactor 3XC-A opens and the relay 9XN (BUS 1XP-A330 ConTroL RLY ; BUS 1XP1-A340 CTL RLY) opens,
- provided RH side main AC bus (AC BUS 2 for A330, AC BUS 2-4 for A340) is supplied:
- relay 15XN (BUS 2XP - A330 CTL RLY: BUS 2XP4 - A340 CTL RLY) is supplied,
- relay 11XC (ESS NeTWorK AUTO SWTG RLY) is energized,
- relay 3XC-B is energized.

The AC ESS network is recovered automatically from RH side main AC bus (AC BUS 2 for A330, AC BUS 2-4 for A340).
In flight, relay 6XE (GND/FLT RLY) is energized. Relay 11XC (ESS NTWK AUTO SWTG RLY) is self-grounded through contactor 15XN (BUS 2XP4 CTL RLY) for A340, 13XN (BUS 2XP CTL RLY) for A330. If the LH side main AC bus is recovered, the supply to ESS network remains on RH side main AC bus as long as the AC ESS FEED P/BSW 4XC on panel 235VU is not cycled (released out and pushed back in). If the AC ESS FEED P/BSW 4XC on panel 235VU is cycled, the feed for AC ESS BUS will switch back to the LH side main bus (AC BUS 1 - A330; AC BUS 1-1 - A340).
On the ground with relay 6XE (GND/FLT RLY) de-energized, if the LH side main AC bus is recovered, it will automatically switch back to the LH side main AC BUS to take over the supply to the AC ESS network.

G7508471 - G3NT1T0 - FM24D300000002

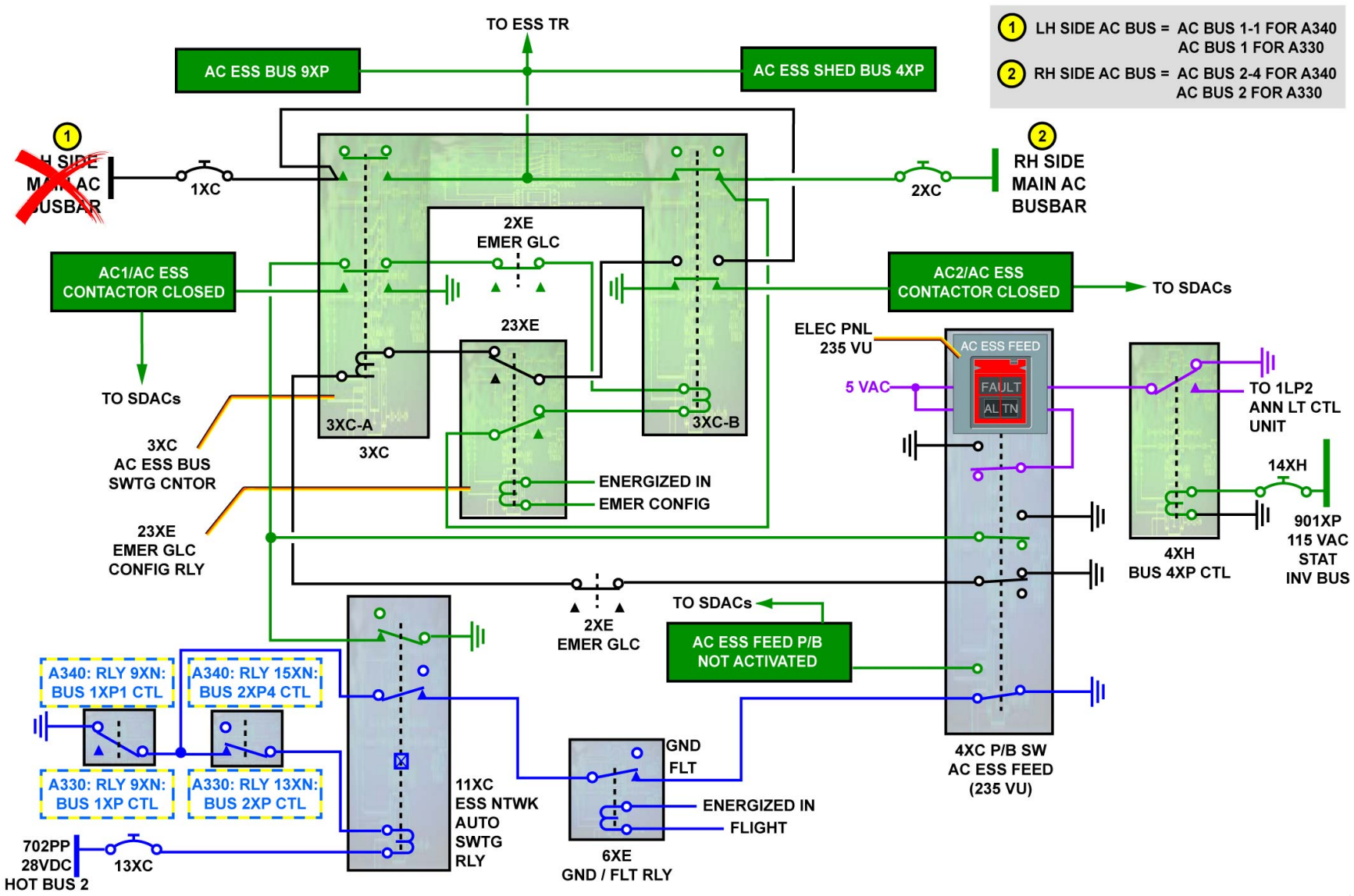

AC ESSENTIAL GENERATION SWITCHING - ABNORMAL AUTOMATIC SUPPLY

G7508471 - G3NT1T0 - FM24D300000002

EMERGENCY AC GENERATION D/O (3)

AC ESSENTIAL GENERATION SWITCHING (continued)

ABNORMAL MANUAL SUPPLY

In case of automatic switching failure, the FAULT legend on the AC ESS FEED P/BSW (4XC on 235VU) remains on.
The AC ESS FEED P/BSW (4XC on 235VU) has to be released out to perform manual switching:
- ALTN legend comes on white on the AC ESS FEED P/BSW (4XC),
- a ground is connected to close 3XC-B,
- as soon as 3XC-B is closed, the ESS network is recovered from RH side main AC busbar (AC BUS 2 - A330; AC BUS 2-4 - A340).

The FAULT legend on the AC ESS FEED P/BSW (4XC) goes off.

G7508471 - G3NT1T0 - FM24D300000002

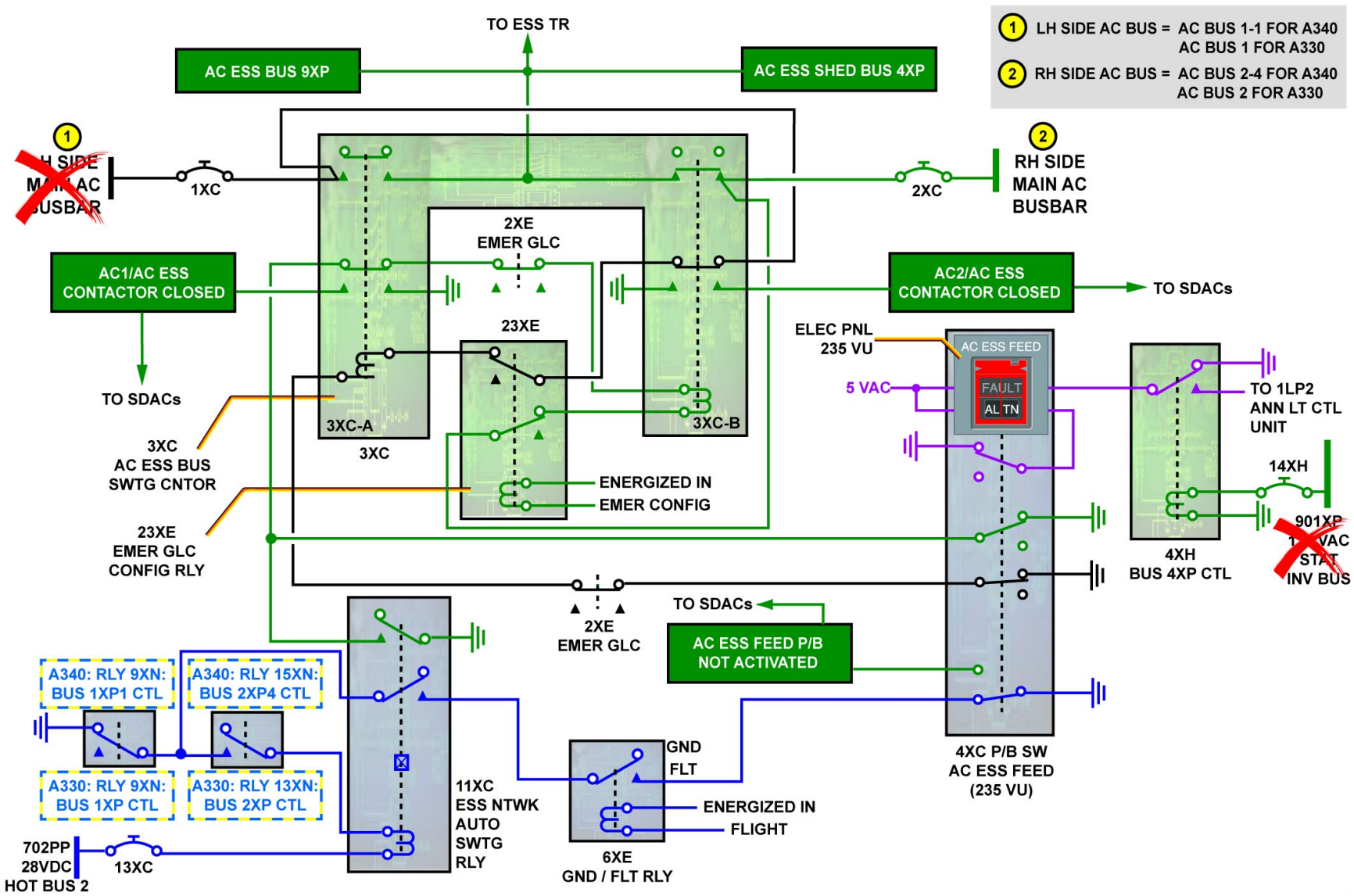

AC ESSENTIAL GENERATION SWITCHING - ABNORMAL MANUAL SUPPLY

G7508471 - G3NT1T0 - FM24D300000002

EMERGENCY AC GENERATION D/O (3)

AC ESSENTIAL GENERATION SWITCHING (continued)

AC ESS EMER GEN SUPPLY

If the CSM/G (EMER GEN 8XE) is running, relay 23XE (EMER GLC CNTOR CONFIG RLY) is energized as soon as the CSM/G GCU (1XE) closes contactor 2XE (EMER GLC). RLY 23XE gives the emergency generator priority to supply the AC ESS network.

G7508471 - G3NT1T0 - FM24D3000000002

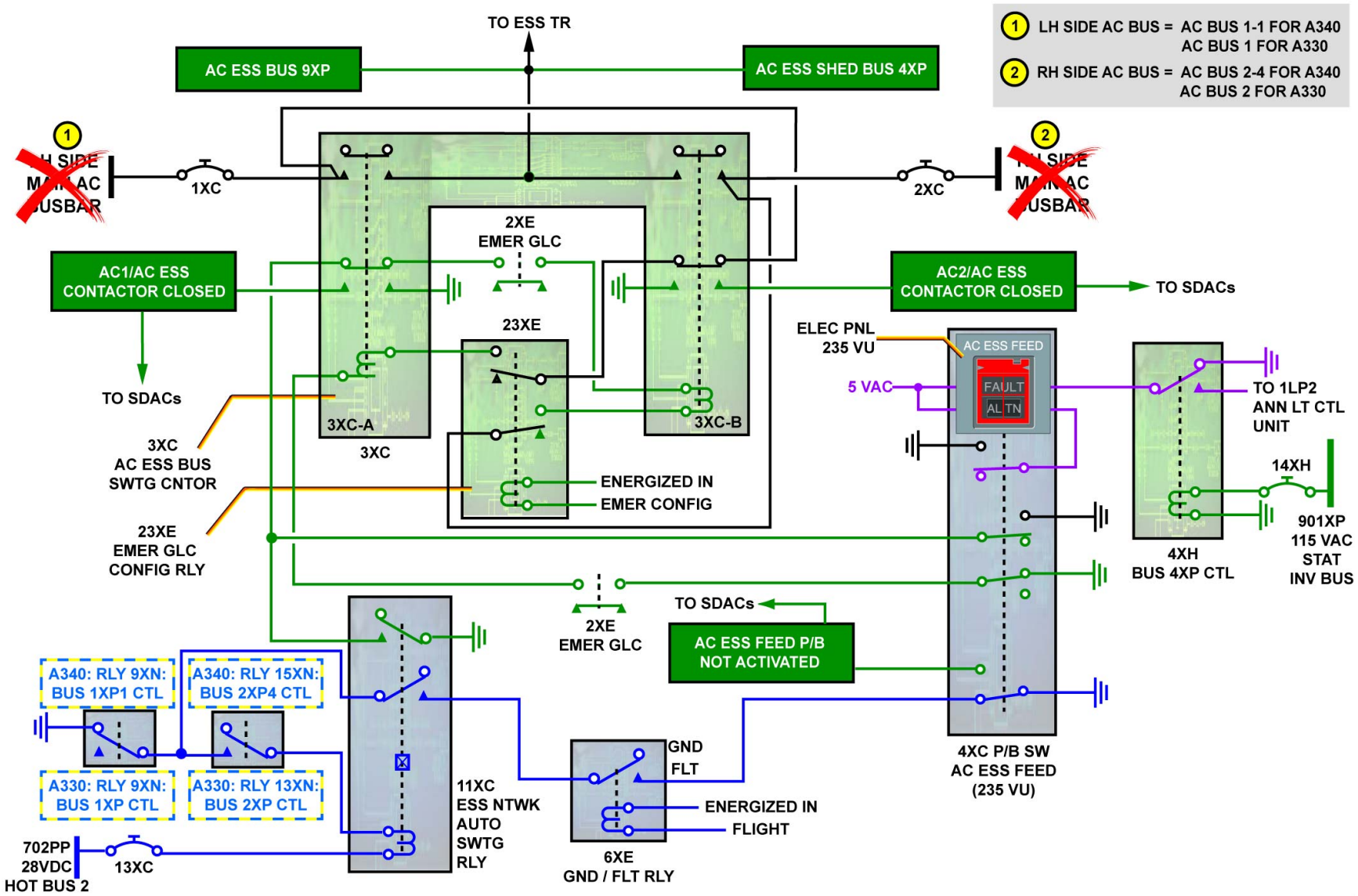

AC ESSENTIAL GENERATION SWITCHING - AC ESS EMER GEN SUPPLY

G7508471 - G3NT1T0 - FM24D300000002

CONTACTORS MANAGEMENT D/O (3)

GENERAL

The Electrical Contactor Management System (ECMS) uses two computers, called Electrical Contactor Management Units (ECMUs), which serve to control:
- the AC GENerator Line Contactors (GLCs),
- the AC transfer contactors [Bus Tie Contactors (BTC-1 and BTC-2) and the System Isolation Contactor (SIC)],
- the EXTernal PoWeR Contactors A and B (EPC-A and EPC-B) and APU GEN Line Contactors (APU GLC),
- the galley Remote Control Circuit Breakers (RCCBs),
- the flight / ground buses (service buses) RCCBs,
- the DC BUS contactors 1 and 2.

The control of the contactors is automatically performed by ECMU 1 and ECMU 2 to ensure the supply of electrical network from the AC sources (ENG GENs, APU GEN or EXT PWR) corresponding to a priority logic. This priority logic is established by the ECMUs.
The AC transfer contactors (BTC-1, BTC-2 and the SIC) can also be opened manually via the BUS TIE P/BSW (13XU on 235VU).
The galley supply and the flight/ground buses (service buses) supply are controlled by RCCBs that are automatically controlled by the ECMUs or manually controlled through the ECMUs.
Manual control of the galley RCCBs is achieved via the GALLEY P/BSW (1XA on 235VU) and COMMERCIAL P/BSW (22XN on 235VU).
Manual control of the flight/ground buses (service buses) RCCBs is achieved via the COMMERCIAL P/BSW (22XN on 235VU).
The DC BUSES status is monitored by the ECMUs to automatically control the DC BUS CONTACTORS 1 and 2, to ensure supply of the DC BUSES.
The ECMS authorizes and supervises the No Break Power Transfer (NBPT) function to momentarily connect two AC power sources in parallel to create a power transfer with no power transients (bus power interruption). This function is only available on ground.

G7508471 - G3NT1T0 - FM24D400000003

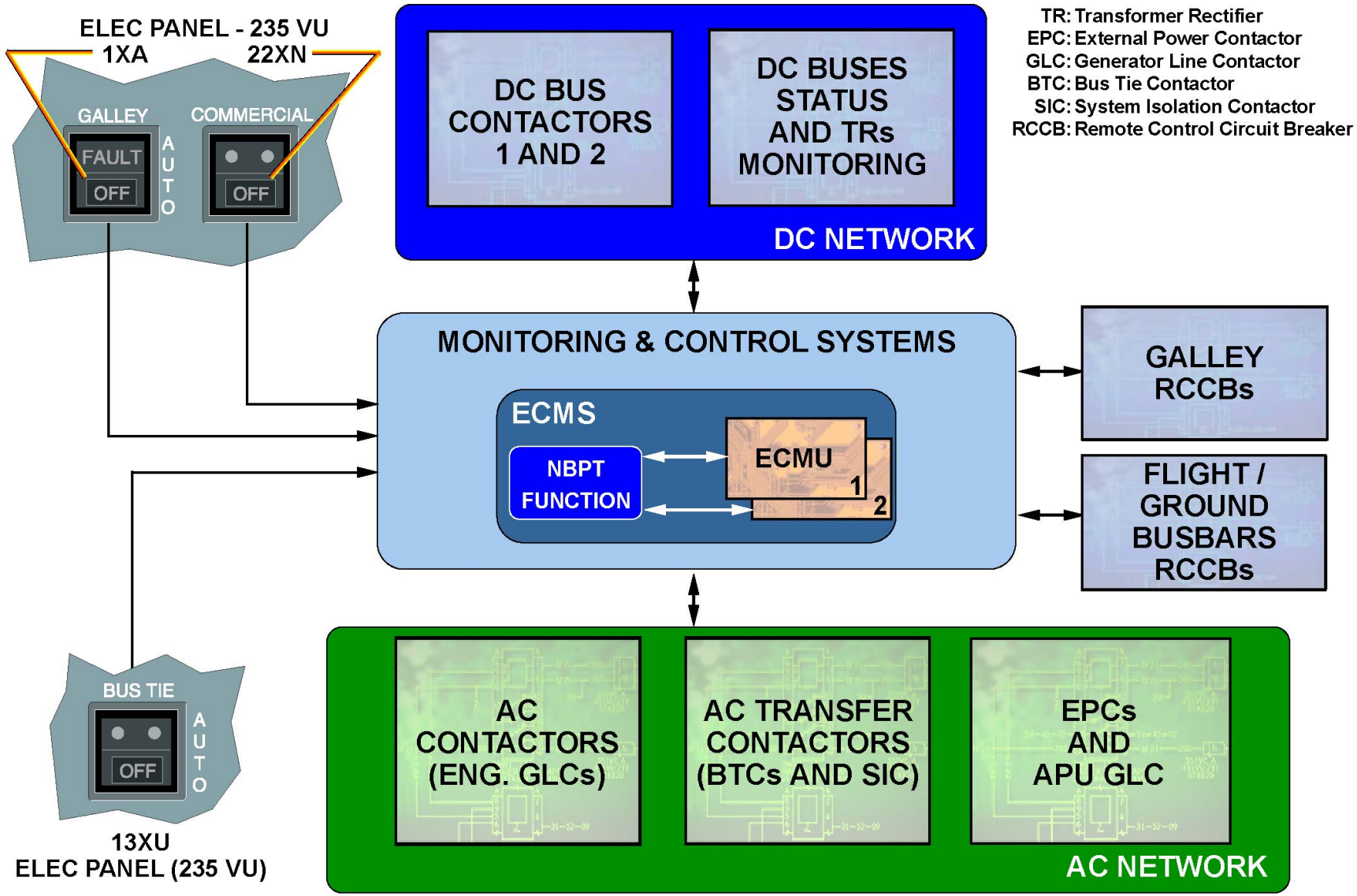

GENERAL

G7508471 - G3NT1T0 - FM24D400000003

CONTACTORS MANAGEMENT D/O (3)

CONTACTOR MANAGEMENT DESCRIPTION

Both ECMUs are physically identical and interchangeable. ECMU pin programming identifies:
- installation on side 1 and on side 2,
- installation of options (ex: galley options),
- type of aircraft.

The ECMU is a type 2 system bite.

NOTE: Note: ECMU 1 manages side 1 (left) contactors while ECMU 2 manages side 2 (right) contactors.

POWER SUPPLY

The ECMU power supply depends on the number one or the number two position of the ECMU.
The ECMU 1 is supplied by the BATtery BUS sub-bus 301PP; the DC ESSential BUS sub-bus 401PP and the AC Tie bus 115 VAC.
The ECMU 2 is supplied by the BAT BUS sub-bus 303PP; the DC ESS BUS sub-bus 403PP and the AC Tie bus 115 VAC.
BAT HOT BUSES 701PP and 702PP supply ECMU1 and 2 respectively in the case of ECMU DC ESS BUS and DC BAT BUS supply failure and only when the battery pushbuttons (on 235VU) are selected on (auto position).

GROUND CONTROL LOGIC

The ECMUs interface with Air Data / Inertial Reference Unit 1 (ADIRU 1) and 3, and Landing Gear Control and Interface Unit 1 (LGCIU 1).
LGCIU 1 provides the ground/flight information to both ECMUs.
ADIRU 1 provides the "less than 50 Kts" speed signal to ECMU1 while ADIRU 3 provides the same signal to ECMU 2. This information is used for the NBPT function when the aircraft is on ground and for inhibition of manual BITE functions in flight.

AC CONTACTOR CONTROL

The main AC buses supply (AC BUS 1 and 2 for A330, AC BUS 1-1, 1-2 and 2-3, 2-4 for A340) is controlled by the ECMUs according the priority supply logic. The ECMUs will close or open the various contactors and assign a specific power source to main AC buses (AC BUS 1 and 2 for A330, AC BUS 1-1, 1-2 and 2-3, 2-4 for A340). Note that when the BUS TIE P/B (13XU on 235VU) is in the OFF position, the transfer circuit contactors (BTCs and SIC) are permanently open and electrical power transfer between main AC buses is inhibited.
To control these contactors, the ECMUs receive supply voltage from the AC buses to indicate whether the bus is supplied. Each ECMU also receives the following information:
- the NBPT signals (S1 - synchronization signals and D - NBPT request signals) and the Power Ready status from all Generator Control Units (GCUs) and Ground Auxiliary Power Control Unit (GAPCU) to enable the NBPT function,
- all AC contactors (GLCs, BTCs and SIC) and BUS TIE P/B status for authorizing and supervising the NBPT function, AC power source bus priority to enable AC power source distribution.

AC TRANSFER CIRCUIT

The SIC and the BTCs are automatically controlled by the ECMUs. ECMU1 controls the left hand side of the electrical network and the SIC while ECMU 2 controls the right hand side.
The BUS TIE P/B should be in auto position for normal system operation.
In this position, the SIC and the four BTCs are automatically controlled according to the AC power sources available.
The five contactors open or close according to the priority logic in order to supply the whole AC network.
In the off position, the OFF legend on the BUS TIE P/B comes on. In this case, the SIC and the two BTCs (four BTCs for A340) are permanently open.

G7508471 - G3NT1T0 - FM24D400000003

With the BUS TIE P/B selected off, the message "ELEC BUS TIE OFF" is displayed on the ECAM.

CAUTION: Caution: In the case of BUS TIE P/B in OFF position, no external or APU power is possible.

DC CONTACTOR CONTROL

Both ECMUs receive DC contactor status. The DC contactor status is to ensure a correct supply of the DC bus bars when an AC supply connection occurs, according to AC power supply logic.
ECMU 1 receives:
- status of Transformer Rectifier 2 (TR 2) for fault and over current detection. The acquisition of the TR 2 fault and Over current detection is to provide DC bus power transfer with a TR 2 failure or NOT to allow DC bus power transfer if TR 2 is failed due to an over current,
- 28 VDC from TR 1 to supply DC BUS 1, 2 and BAT BUS (BUS 3) through (1PC1 - 28VDC BUS 1/BUS 3 SuPpLY CoNTactOR and 1PC2 - 28VDC BUS 2/BUS 3 SPLY CNTOR) DC BUS power transfer control logic,
- voltage from 101PP (DC BUS 1 sub-bus bar). It is used to indicate DC BUS 1 is supplied.
ECMU 2 receives:
- status of TR 1 for fault and over current detection. The acquisition of the TR 1 fault and over current detection is to provide DC bus power transfer with a TR 1 failure or not to allow DC bus power transfer if TR 1 is failed due to an over current,
- 28 VDC from TR 2 to supply DC BUS 1, 2 and BAT BUS (BUS 3) through (1PC1 - 28VDC BUS 1/BUS 3 SPLY CNTOR and 1PC2 - 28VDC BUS 2/BUS 3 SPLY CNTOR) DC BUS power control logic,
- voltage from 206PP (DC BUS 2 sub-bus bar). It is used to indicate DC BUS 2 is supplied.
A loss of one ECMU does not affect the supply of the main DC buses.

BITE

Each ECMU has one ARINC 429 data link output that permits monitoring data to be sent to the System Data Acquisition Concentrators (SDACs) 1 and 2 for display on the ECAM, and the BITE data to Central Maintenance Computer (CMC) 1 and 2. The ECMU communicates to the CMCs in two modes:
- the first (normal mode) is a power-up test and fault monitoring / fault recording,
- the second mode (interactive mode) is only possible on ground via the MCDU for a manual test activation and fault display access.
Each ECMU continually monitors its inputs, outputs and internal functions to determine if a failure condition exists. Failure information will be stored in the internal Non-Volatile Memory (NVM) and also sent to the CMCs.

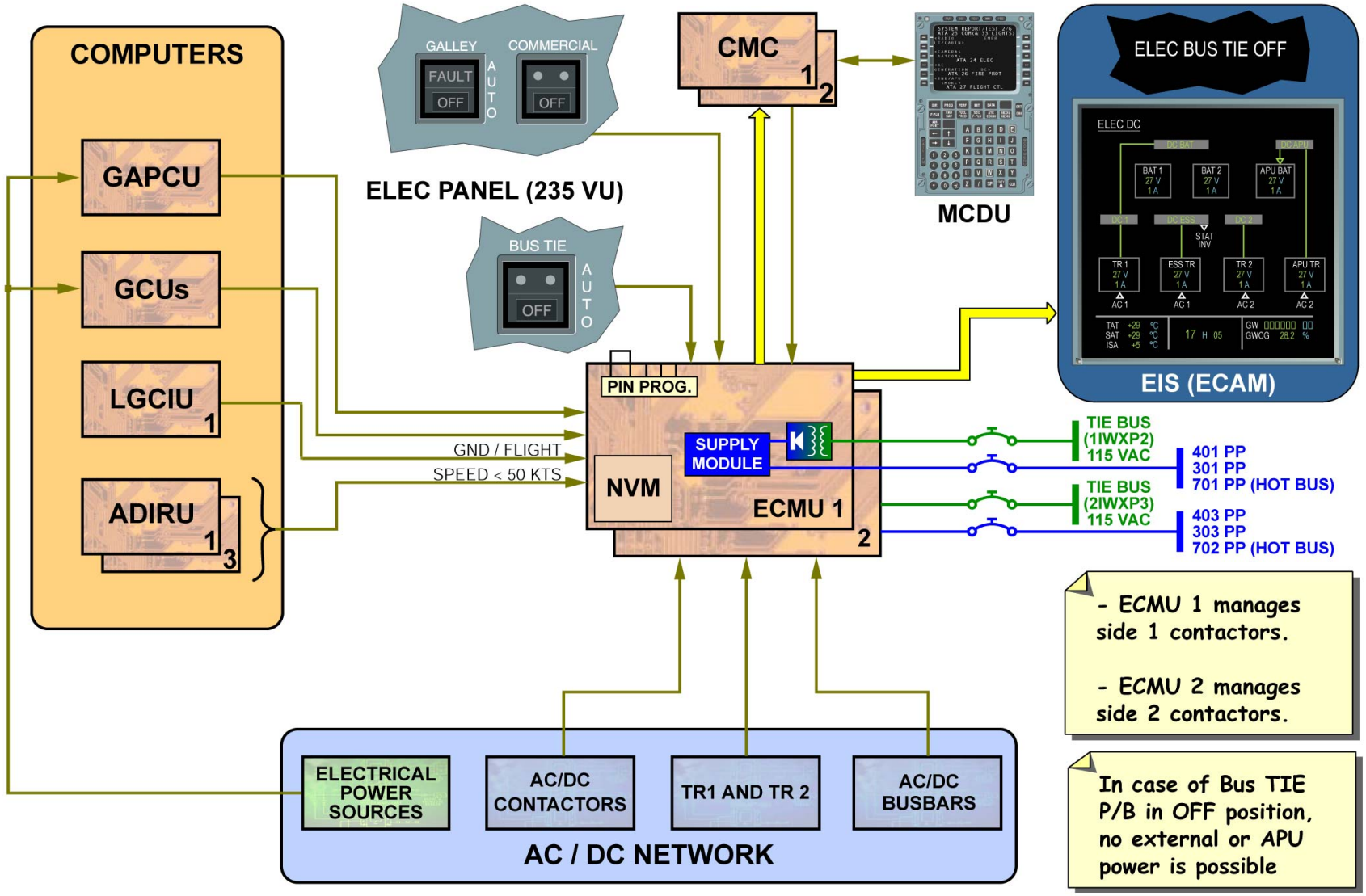

CONTACTOR MANAGEMENT DESCRIPTION - POWER SUPPLY ... BITE

G7508471 - G3NT1T0 - FM24D400000003

This Page Intentionally Left Blank

G7508471 - G3NT1T0 - FM24D400000003

CONTACTORS MANAGEMENT D/O (3)

CONTACTOR MANAGEMENT DESCRIPTION (continued)

REMOTE CONTROL CIRCUIT BREAKER (RCCB)

The RCCB controls and protects certain AC power distribution lines and certain equipment power supply lines.
The RCCB is used to fulfill the following functions:
- electrical line protection (tripping - circuit breaker function),
- electrical load switching (switching - contactor function).

The status of the main contacts is known by a visual state indication (OPEN or CLOSE) on the front face of the RCCB. The status of the main contacts is also acquired by the ECMUs by the status of two internal auxiliary contacts that move with the main contacts. This auxiliary contact monitoring function of the ECMUs allows the ECMUs to know that the main contacts are OPEN or CLOSED.
In case of tripping (overload or manual trip - circuit breaker function), a trip signal is transmitted to the Circuit Breaker Monitoring Unit (CBMU) and the associated ECMU. The CBMU will list the RCCB on the ECAM C/B page to indicate the opened RCCB and the RCCB's functional designation, Functional Item Number (FIN) and location (see Circuit Breaker Monitoring Description topic).
The RESET P/B located on the front face of the RCCB, has two stable positions:
- when pressed in, electrical control is authorized. On the front face of the RCCB, the visual indication shows the OPEN or CLOSE message in function of the main contact status,
- the RESET P/B is released out, if there is an overload on the main circuit (circuit breaker function). In this case, the RCCB cannot be electrically controlled OPEN or CLOSE. The main contacts are locked in the OPEN status. The TRIP signal switches from the OPEN to the CLOSE status and a signal is sent to the CBMU for display on the ECAM C/B page. On the front face of the RCCB, the visual indication shows the OPEN message. The RESET P/B must be pushed in to reset and reactivate the RCCB control.

The RCCBs are supplied with:
- 115/200 VAC, 400 Hz from the AC Main Distribution bus bars,
- 28 VDC either from the ECMUs or control relays from certain equipment, such as a hydraulic electrical pump, that use an RCCB to control the operation of the equipment.

G7508471 - G3NT1T0 - FM24D400000003

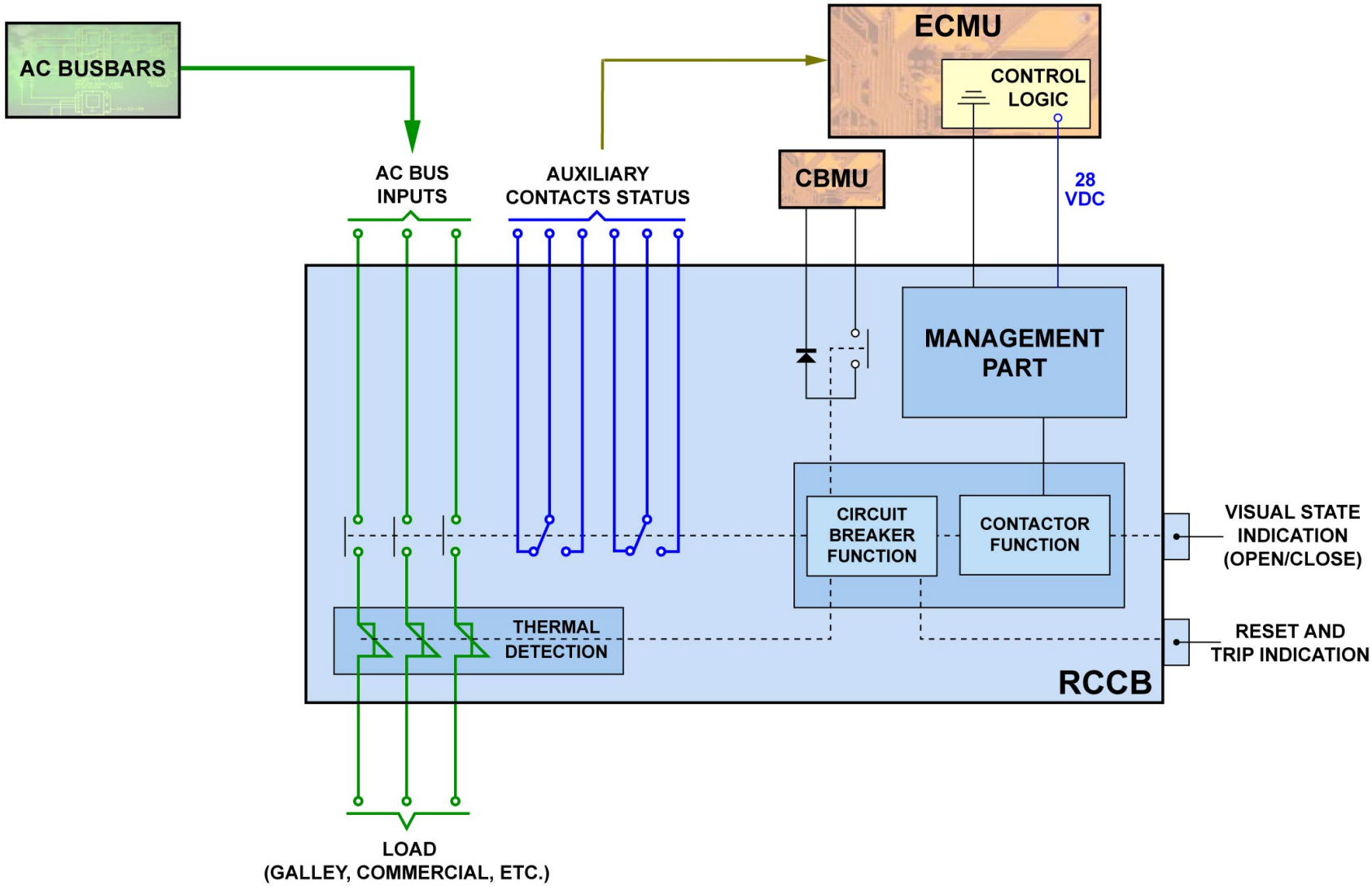

CONTACTOR MANAGEMENT DESCRIPTION - REMOTE CONTROL CIRCUIT BREAKER (RCCB)

G7508471 - G3NT1T0 - FM24D400000003

CONTACTORS MANAGEMENT D/O (3)

CONTACTOR MANAGEMENT DESCRIPTION (continued)

GALLEY / COMMERCIAL SUPPLY CONTROL

The galley supply system consists of three-phase feeder lines that supply aircraft terminal blocks with 115/200 VAC, 400 Hz power. The galleys are electrically connected to the terminal blocks through power feeders. The galley assemblies are divided into any parts:
- for A340-300, galley assemblies divided into two parts: forward/middle and aft area,
- for A330, galley assemblies divided into three parts: forward/middle, middle/aft and aft area.

Any galleys and sub-busbars can be automatically shed by ECMUs (via RCCBs) when aircraft is in a degraded electrical power configuration (loss of one IDG in flight without APU GEN for example). This shedding can be performed partially or completely.
The automatic shedding logic is defined in function of:
- the aircraft type (A330 / A340-300),
- the number of available AC sources (IDGs, APU GEN, EXT PWR A and/or B),
- the flight / ground condition,
- the AC source(s) lost and its (their) location(s),
- the AC source in overload condition (if overload condition detection),
- the number of installed galleys.

NOTE: Note: For A330, RCCB 10 is powered via relay 2XA1, whereas for A340-300, RCCB 10 is powered via the specific relay 6XA1.

Each RCCB controls individually and directly the power supply to the connected galleys. It opens the contactors and cuts-off the power supply in case of an overload or a short circuit in the galley (circuit breaker function).
The RCCBs are remotely controlled by ECMUs.

When the GALLEY control P/BSW (1XA on 235VU) is in the OFF position:
- the OFF legend in the GALLEY P/BSW (1XA) comes on,
- GALLEY TOTAL SHEDding ReLaY's (2XA1 and 2XA2 for A330
- 2XA1, 2XA2 and 6XA1 for A340-are de-energized,
- all galleys are OFF,
- the ECAM message GALLEY SHED is displayed on the bottom of the ECAM AC ELectrical page and the message GALLEY is displayed on the ECAM STATUS page under INOPerative SYStem,
- the control logic is reset to enable re-energization of the GALLEY power supplies by pushing the GALLEY P/BSW (1XA) in.

When the COMMERCIAL control P/BSW (22XN on 235VU) is in the OFF position:
- the OFF legend in the COMMERCIAL P/BSW (22XN) comes on,
- all galleys are OFF,
- in addition to the galleys off, all service buses are OFF.

The equipment on the service buses that are de-energized are:
- passenger entertainment system (music and video if installed),
- cargo loading system,
- electrical service (service outlets),
- escape slide lock mechanism ice protection,
- water/waste (drain mast) ice protection,
- lavatory and cabin lights,
- water heaters,
- in-seat power supply (if installed).

The ECAM message COMMERCIAL OFF is displayed on the bottom of the ECAM AC EL page and the message COMMERCIAL is displayed on the ECAM STATUS page under INOP SYS.
The COMMERCIAL OFF function provides additional manual electrical load shedding, if needed.

G7508471 - G3NT1T0 - FM24D400000003

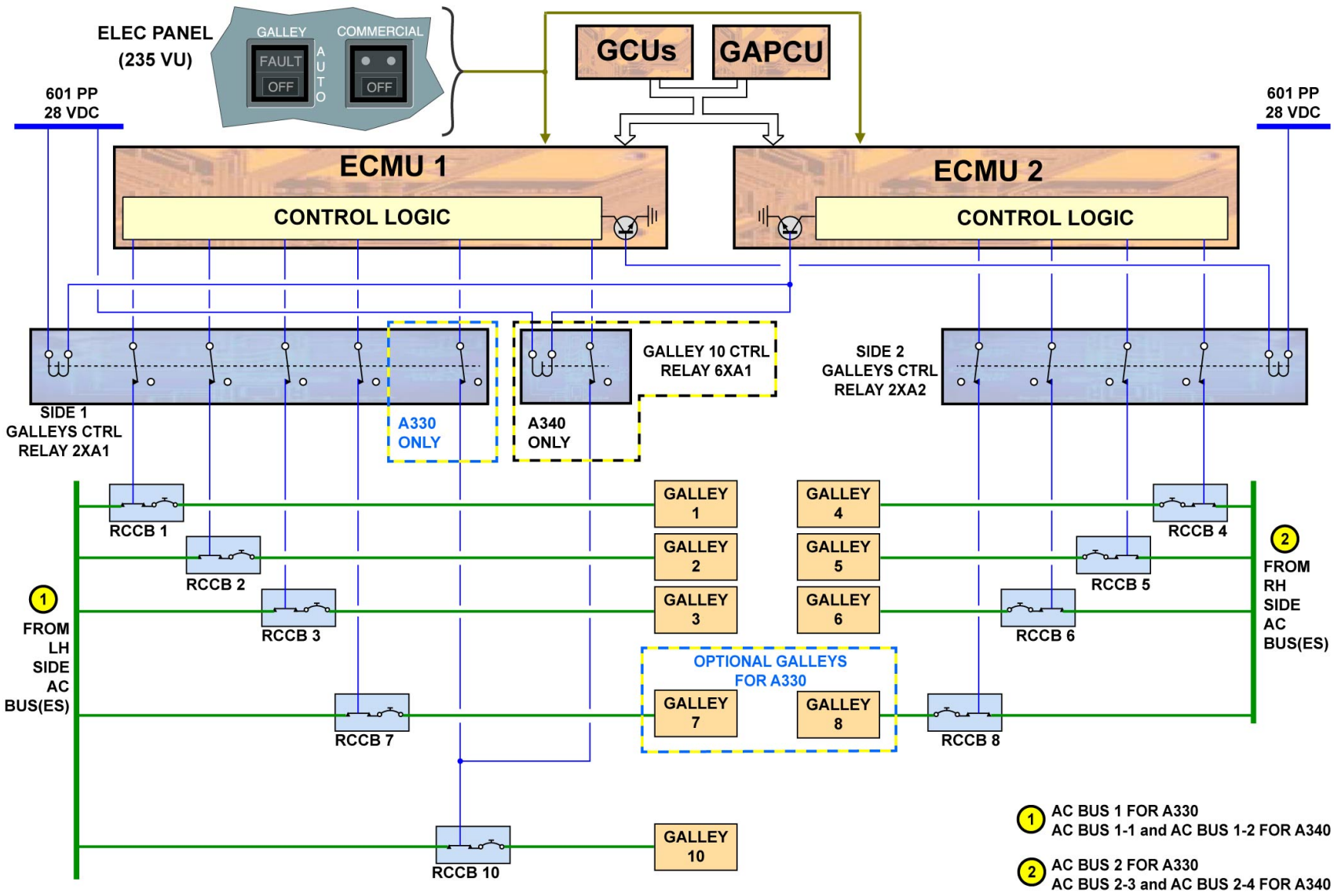

CONTACTOR MANAGEMENT DESCRIPTION - GALLEY / COMMERCIAL SUPPLY CONTROL

G7508471 - G3NT1T0 - FM24D400000003

CONTACTORS MANAGEMENT D/O (3)

CONTACTOR MANAGEMENT DESCRIPTION (continued)

SERVICE BUS CONTROL

EXT PWR A supplies AC and DC service buses. ECMU 2 controls the service buses RCCB's via the position of the MAINTENANCE SERVICE BUS selector (toggle) switch (16XX on panel 5001VE located in forward entry area). Once EXT A is available, ECMU 2 will control the associated service buses RCCB's and will allow the service buses to be supplied. The service buses are sub buses of both main AC buses (AC BUS 1 and 2 for A330, AC BUS 1-1 and 2-4 for A340) and include a DC service bus.

ECMU 1 monitors and controls 6XN1 and 7XN1, which are the normal aircraft power RCCB's to supply two AC BUS 1 sub buses for A330, or two AC BUS 1-1 sub buses for A340.

ECMU 2 monitors and controls the sub bus RCCB's 6XN2, 7XN2, 1XX, 2XX, 3XX, 4XX and 6XX contactor.

The RCCB's 6XN2 and 7XN2 are the normal aircraft power RCCB's to supply two AC BUS 2 sub buses for A330, or two AC BUS 2-4 sub buses for A340.

The RCCB's 1XX, 2XX, 3XX, 4XX are the service bus RCCB's that supply the same two sub buses (AC BUS 1 sub buses for A330, AC BUS 1-1 sub buses for A340) supplied by 6XN1 and 7XN1 and the same two sub buses (AC BUS 2 sub buses for A330, AC BUS 2-4 sub buses for A340) supplied by 6XN2 and 7XN2. These are alternate RCCB service bus supplies (1XX, 2XX, 3XX, 4XX) and are used when only ground service from EXT PWR A is selected (used) on the aircraft.

ECMU 2 acquires the position of the MAINT BUS selector switch (16XX on 5001VE) and electro-magnetically holds the MAINT BUS selector switch in the ON position.

ECMU 2 monitors the normal TR 2 supply contactor 2PU.

NOTE: Note: If TR 2 is failed, the service bus supply from the MAINT BUS selector switch (16XX) will not be electro-magnetically held in the ON position by ECMU 2, preventing ground service supply on the aircraft.

The TR 2 is energized through contactor 6XX and is used to supply the DC SERVICE BUS 6PP.

NOTE: Note: Placing the COMMERCIAL P/BSW (22XN on 235VU) to the off position, the services buses will be de-energized. This function is covered in the GALLEY/COMMERCIAL SUPPLY topic (previous topic).

G7508471 - G3NT1T0 - FM24D400000003

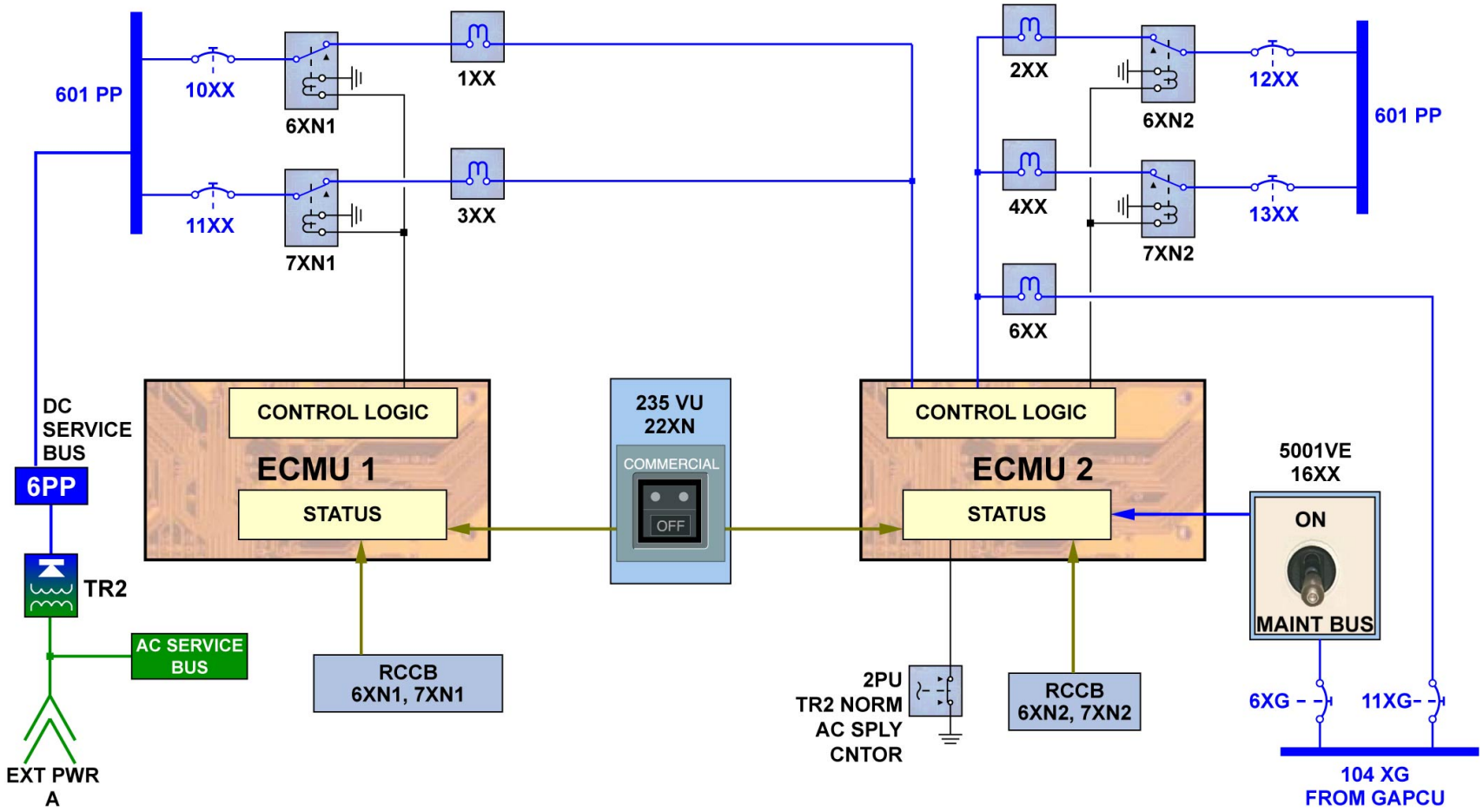

CONTACTOR MANAGEMENT DESCRIPTION - SERVICE BUS CONTROL

G7508471 - G3NT1T0 - FM24D400000003

CONTACTORS MANAGEMENT D/O (3)

CIRCUIT BREAKER MONITORING DESCRIPTION: CBMU

The Circuit Breaker Monitoring System (CBMS) consists of one Circuit Breaker Monitoring Unit (CBMU) that monitors the status of the Circuit Breakers (C/Bs) and Remote Control Circuit Breakers (RCCBs).
The CBMS performs the following functions:
- C/B and RCCB monitoring,
- status identification and data transmission,
- monitoring of the open C/Bs for optional equipment.

The C/Bs and RCCBs are arranged by groups of 30 maximum. The CBMU monitors 26 groups on side 1 and 16 groups on side 2.

CIRCUIT BREAKERS STATUS

The CBMU performs a scanning of the C/Bs and RCCBs status through a wiring matrix, by sending a DRIVE signal on the auxiliary contacts of the C/B's and RCCB's.
The RETURN signal informs the CBMU of the status, according to the auxiliary contacts which are open when the main contacts of the C/Bs or RCCBs are closed.
The C/B status can be:
- closed,
- open or,
- unknown, if neither open nor closed position can be confirmed in case of failure.

CIRCUIT BREAKER IDENTIFICATION

The CBMU contains in a NVM, the aircraft circuit breaker database containing the data about all the monitored C/Bs and RCCBs.
The identification of open C/Bs and/or RCCBs is made by designation, panel position and FIN. The open circuit breaker information is viewed on the ECAM C/B page by selecting the C/B P/BSW on the ECAM Control Panel.

SYSTEM OPERATION

As soon as the CBMU is powered up, on ground or in flight, it begins the scanning of all the C/Bs and RCCBs.
The CBMU is supplied from DC busbar 101PP.

CLOSED C/B

When no C/B and/or RCCB are open or tripped, the NORMAL message is displayed on the ECAM C/B page, if the ECAM C/B page is selected using the ECAM control Panel.

OPEN C/B

When the CBMU detects an open or tripped C/B and/or RCCB, its identification is transmitted to the ECAM via the Display Management Computers (DMCs) and Flight Warning Computers (FWCs) and a Class 1 level 2 amber caution is triggered. The Class 1 level 2 amber caution message, ELEC C/B TRIPPED, appears on the ECAM E/WD display. However, the ECAM C/B page is not displayed automatically. To view the C/B and/or RCCB that is opened or tripped, the ECAM C/B page must be selected manually on the ECAM Control Panel.
All data related to the open C/B's and/or RCCBs are stored in a NVM for the BITE function, and also sent to the CMCs.
The CBMU also monitors the C/B's in pulled position when corresponding optional equipment is not installed. If one of these C/Bs is detected not pulled, a maintenance message is sent to the CMCs.

CBMU DATA BASE

The Multipurpose Disk Drive Unit (MDDU - 1TD) is used only on the ground to perform the up-loading of the C/B database in the CBMU by means of a floppy disk.

NOTE: Note: The C/B database is customized for each aircraft.
An ARINC bus 429 enables the automatic transfer between the MDDU (1TD) and the CBMU via the Data Loading Routing Box (DLRB -

G7508471 - G3NT1T0 - FM24D400000003

102TD) when the Data Loading Selector (DLS -101TD) is selected to CBMU.

G7508471 - G3NT1T0 - FM24D400000003

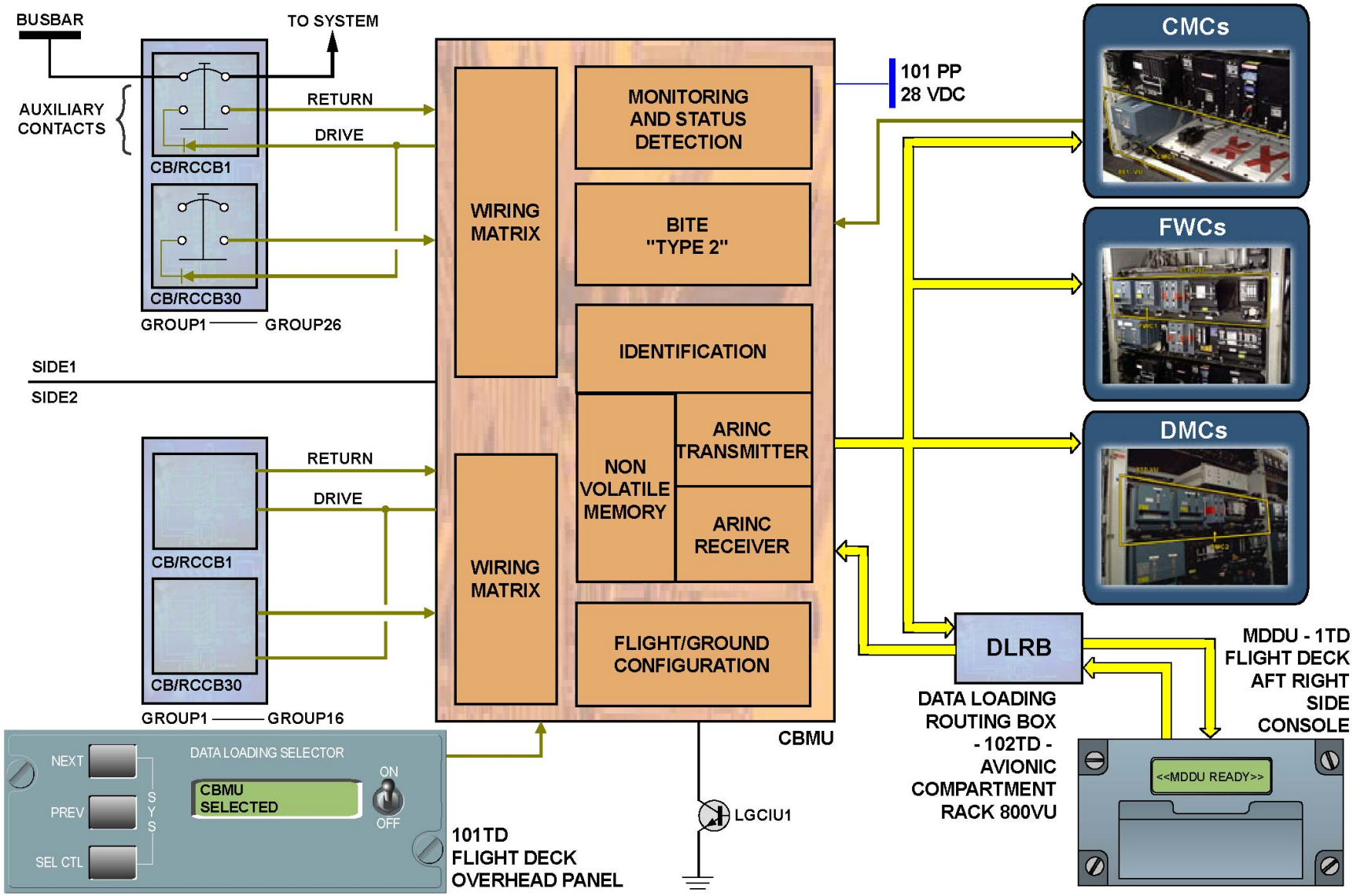

CIRCUIT BREAKER MONITORING DESCRIPTION: CBMU - CIRCUIT BREAKERS STATUS ... CBMU DATA BASE

G7508471 - G3NT1T0 - FM24D400000003

This Page Intentionally Left Blank

G7508471 - G3NT1T0 - FM24D400000003

CONTACTORS MANAGEMENT D/O (3)

NBPT FUNCTION

The purpose of the NBPT (No-Break Power Transfer) is to avoid any electrical disruption of the busbars in order to prevent unwanted momentary power supply transients. The no break power function will prevent system computer(s) from experiencing long power supply cutoffs, thus preventing the possibility of system computer(s) automatically initiating an unwanted power-up tests.

NOTE: Note: A system computer(s) can only initiate a power-up test on the ground. During the duration of the power-up test, a system computer(s) is inoperable.

The NBPT function is operative on the ground only between two power sources (IDGs, APU GEN, EXT PWR A, EXT PWR B). The electrical supply source (IDGs, APU GEN, EXT PWR A & B) connection/disconnection to the aircraft's electrical network must be performed according to standard operating procedures.

To provide an NBPT function, the 2 ECMUs authorize and supervise the opening and closing of the line contactors (GLCs, APU GLC, EPCs) and the transfer contactors (BTCs and SIC). The GCUs and the GAPCU provide the data necessary for the ECMUs to perform the NBPT function. The NBPT sequence occurs as the ECMUs receive a "request" signal from the GCUs or GAPCU to indicate an AC power source (IDG, APU GEN, EXT PWR A & B) is coming on the electrical network or going off the electrical network. Upon receiving a "request" signal from an AC power source, the ECMUs now look for a "synchronization signal" from the AC power source to indicate the AC power source is synchronized with the reference power source for the respective AC BUS. The synchronization signal enables the momentary paralleling function to be accomplished. This paralleling function is performed in no more than 80 ms. The priority of the reference source is provided by the GAPCU according to what AC power sources are available. Once the AC power source coming on the AC BUS has paralleled and is established on the AC BUS, the ECMUs remove the AC power source going off the AC BUS.

INADVERTENT PARALLELING TRIP

The Inadvertent Paralleling Trip function prevents a sustained paralleling between the various electrical sources (IDG, APU, EXT PWR). If two different sources are connected in parallel on an AC BUS for more than 80 ms, the ECMU opens the applicable contactors (BTC, APU GLC, EPC) to cancel the paralleling. If the paralleling persists (130 ms), the ECMU opens a second contactor. Each time a contactor is open, it is latched in this status until reset occurs. In addition to the Inadvertent Paralleling Trip function in the ECMUs, a back-up Inadvertent Paralleling Trip protection is provided by each GCU and the GAPCU.

G7508471 - G3NT1T0 - FM24D400000003

A330 ONLY

POWER SOURCE CONNECTED	POWER SOURCE TO BE CONNECTED OR TO BE DISCONNECTED				
	IDG 1	IDG 2	APU	EPA	EPB
IDG 1					
IDG 2					
APU	NBPT	NBPT		NBPT	
EPA	NBPT	NBPT	NBPT		
EPB	NBPT	NBPT	NBPT		

IPT performed as soon as a two sources paralleling occurs longer than 80 ms.

A340 ONLY

POWER SOURCE CONNECTED	POWER SOURCE TO BE CONNECTED OR TO BE DISCONNECTED						
	IDG 1	IDG 2	IDG 3	IDG 4	APU	EPA	EPB
IDG 1		NBPT*					
IDG 2	NBPT*						
IDG 3				NBPT*			
IDG 4			NBPT*				
APU	NBPT	NBPT	NBPT	NBPT		NBPT	
EPA	NBPT	NBPT	NBPT	NBPT	NBPT		
EPB	NBPT	NBPT	NBPT	NBPT	NBPT		

LEGEND

NBPT	NBPT is operative.		NBPT is not operative.
NBPT*	NBPT is operative provided that one IDG is connected on the other side, there will be no NBPT across the SIC between LH and RH IDG channels.		No electrical transfer possible.

NBPT FUNCTION - INADVERTENT PARALLELING TRIP

G7508471 - G3NT1T0 - FM24D400000003

CONTACTORS MANAGEMENT D/O (3)

NBPT FUNCTION (continued)

NBPT LINK

In normal operation, on the basis of the data provided by the GCUs, the GAPCU, and the contactor status (OPEN or CLOSE), the ECMUs manage and control the main AC contactors (GLCs, APU GLC, BTCs, EPC A and EPC B and SIC).
The signals involved in the NBPT functions are:

From the GCU to ECMU:

- D: the NBPT request signal, AC source requests connection or removal to an AC BUS,
- S1: established synchronization signal, the ENG GENs and the APU GEN is within +/- 5 VAC, +/- 0.5 HZ, +/- 15 degrees phase angle difference from the reference AC source. This reference is sent to the GCUs from the GAPCU.

NOTE: Note: The reference AC source is established by the GAPCU according to the presently available AC sources.

- This function is called the Frequency Reference Unit (FRU) function inside the GAPCU. The FRU establishes a priority depending upon the available AC power sources and uses the FRU AC power source as the reference for synchronization, only on the ground. The FRU AC reference priority is determined by the AC power source configuration and may or may not be the same reference sent to the left side of the network or to the right side of the network.
- FRU priority:
- EXT PWR A,
- EXT PWR B,
- APU GEN,
- Master 400HZ reference.

FROM THE ECMU TO GAPCU AND GCU:

- S2: indicating the end of the NBPT function.

From the GAPCU to ECMU:

- D: the NBPT request signal, AC source requests connection or removal to an AC BUS,
- S1: established synchronization signal, the APU GEN is within +/- 5VAC, +/- 0.5HZ, +/- 15 degrees phase difference from the reference AC source or the EXT PWR is 115VAC +/- 5VAC, 400HZ +/- 10HZ and available.

NOTE: Note: The reference AC source is established by the GAPCU according to the presently available AC sources.

- This function is called the FRU function inside the GAPCU. The FRU establishes a priority depending upon the available AC power sources and uses the FRU AC power source as the reference for synchronization, only on the ground. The FRU AC reference priority is determined by the AC power source configuration and may or may not be the same reference sent to the left side of the network or the right side of the network.
- FRU priority:
- EXT PWR A
- EXT PWR B
- APU GEN
- Master 400HZ reference.
- S2: indicating the end of the NBPT function,

From the GAPCU to GCU:

- FRU: indicating the FRU change signal, once the APU GEN is connected to the network,

From the GAPCU to Electronic Control Box (ECB):

- APU RAMP: signal (ARINC 429) to "ramp" the APU shaft speed up or down for phase alignment purposes.

From the ECB to GAPCU:

- APU READY: signal when the APU speed is greater than 95%.

G7508471 - G3NT1T0 - FM24D400000003

NOTE: Note: The APU READY signal is performed once APU speed is greater than 95 %.

G7508471 - G3NT1T0 - FM24D400000003

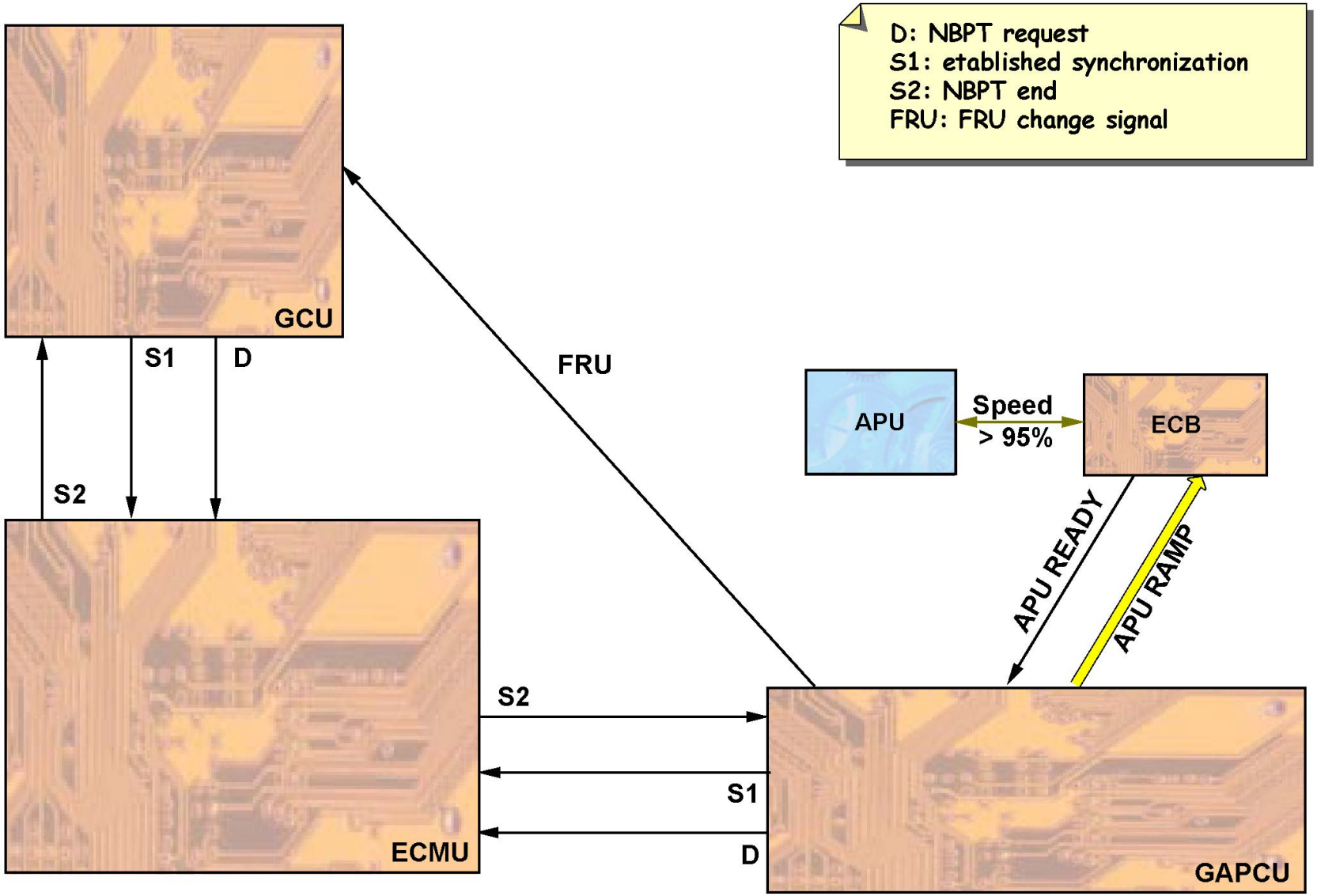

NBPT FUNCTION - NBPT LINK

G7508471 - G3NT1T0 - FM24D400000003

This Page Intentionally Left Blank

G7508471 - G3NT1T0 - FM24D400000003

CONTACTORS MANAGEMENT D/O (3)

NBPT OPERATION

This topic presents different examples of NBPT functions.

A/C CONFIGURATION

The LH side of the electrical network is supplied by EXT PWR B alone. The RH side is supplied by EXT PWR A alone, SIC is open. EXT PWR A and B are controlled and monitored by the GAPCU.

NOTE: Note: A NBPT cannot be accomplished between EXT PWR A and EXT PWR B.

APU GEN / EXT PWR B NBPT STARTING

EXT PWR B is connected. The APU GEN is going to be connected to the LH AC busbars, a momentary paralleling is performed for a very short time between the present AC BUS supply source (EXT PWR B) and the source to be connected, APU GEN.

APU AT 95%

By pressing the APU START P/B, the APU start sequence begins. The "D" signal is sent to the GAPCU. At 95% rated speed, the ECB sends the APU READY signal to the GAPCU. The APU GEN Control part of the GAPCU controls and monitors the APU GEN parameters and when they are within accepted limits, it sends the "D" signal to both ECMUs.

APU GEN READY

The FRU sends the EXT PWR B frequency data to the APU GEN control, which is a part of the GAPCU. If the FRU is within the limits of 390 to 410 Hz, the APU GEN control part sends the "APU RAMP" signal to the ECB.
This "APU RAMP" signal is an ARINC 429 signal that will cause the ECB to adjust the APU shaft speed. The speed adjustment rate and direction depends on the difference between the frequency of EXT PWR B (FRU) and the APU GEN frequency. When the APU GEN frequency (+/- 0.5 Hz) and phase angle (+/- 15 degrees) match the FRU, the GAPCU issues the "S1" synchronization signal to both ECMUs. This indicates that the APU GEN is now ready to be momentarily placed in parallel with EXT PWR B.
A paralleling is performed between the effective busbar supply source (EXT PWR B to LH side busbars) and the new source to be connected (APU GEN). Upon APU GEN connection to aircraft network, the paralleling function is stopped. EXT PWR B is removed from the AC BUS.

APU TAKE-OVER FROM EXT PWR B

ECMU 1 closes the APU GLC, placing the APU GEN in parallel with the EXT PWR B on the transfer line, and then opens the EPC B. The APU GEN powers left side electrical network. The NBPT is now completed.

APU GEN FREQUENCY is now THE NEW FREQuency REFerence (FRU) FOR A NEW NBPT DEMAND (ON "D" SIGNAL REQUEST)

When EPC B opens, the EXT PWR B "S1" signal, the APU GEN ramp signal, and the APU GEN "S1" signal are all removed from the GAPCU. When the APU GEN ramp signal is removed, the APU ECB regulates the APU GEN frequency to 400 Hz through APU "N" speed adjustment. The FRU for the LH side of the aircraft changes from EXT PWR B frequency to the APU GEN frequency.

APU GEN / EXT PWR B NBPT SHUTDOWN

The APU GEN is going to be disconnected from the LH side electrical network; a paralleling is performed for a very short time between the effective supply source (APU GEN) and the source to be connected (EXT PWR B) in this case.

APU MASTER P/B TO OFF

G7508471 - G3NT1T0 - FM24D400000003

The APU GEN supplies the LH side. As long as the APU MASTER P/B is ON, the APU GEN remains valid for an NBPT function. When it is set to OFF the GAPCU receives a discrete "shutdown" signal. Prior to APU shutdown (or APU MASTER P/B to OFF) the GAPCU will:
- remove the "D" signal to the ECMUs indicating that the APU GEN is being shutdown and NBPT is requested,
- issue the frequency change request signal (S4) to the FRU (the FRU switches reference to EXT PWR B and provides this signal to the LH side GCU).

When the APU GEN control part receives the frequency reference signal (EXT PWR B) from the FRU, it generates the RAMP signal to the ECB. If the frequency reference signal is within the limits of 390 to 410 Hz, the ECB adjusts the APU speed. The speed adjustment rate and direction depends on the difference between the reference frequency (FRU) of EXT PWR B and APU GEN.

When the APU GEN frequency and phase angle are within limits of the frequency reference signal, the S1 signal is sent to the ECMUs indicating that the APU GEN is ready to be momentarily placed in parallel with the EXT PWR B source. Upon EXT PWR B connected to A/C network, the paralleling function is terminated; APU GEN is removed from the network.

After a short time delay, ECMU 1 opens the APU GLC and EXT PWR B supplies the LH side. If no other power sources (EXT PWR A or IDG) are connected to the RH side, ECMU 1 closes the SIC and EXT PWR B also supplies the RH side network.

NOTE: Note: If synchronization between APU GEN and EXT PWR cannot be achieved within 15 seconds, a conventional break power transfer is achieved.

G7508471 - G3NT1T0 - FM24D400000003

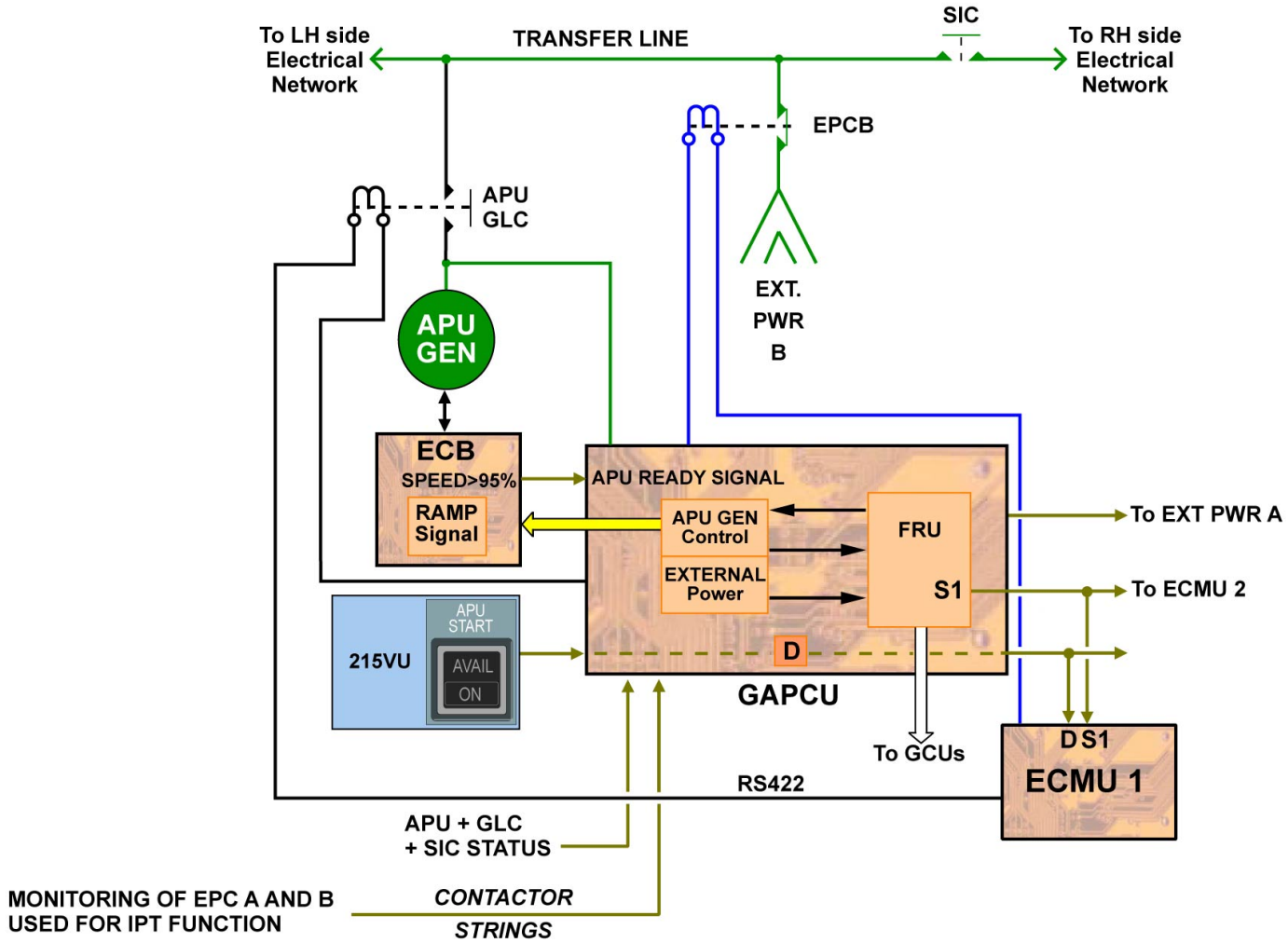

APU GEN / EXT PWR B NBPT STARTING and SHUTDOWN

NBPT OPERATION - A/C CONFIGURATION ... APU GEN / EXT PWR B NBPT SHUTDOWN

G7508471 - G3NT1T0 - FM24D400000003

This Page Intentionally Left Blank

G7508471 - G3NT1T0 - FM24D400000003

CONTACTORS MANAGEMENT D/O (3)

NBPT OPERATION (continued)

GEN 1 / APU GEN NBPT STARTING

NOTE: Note: To illustrate this NBPT sequence between GEN 1 and APU GEN, A330 LH side electrical network is shown as example. The NBPT sequence between GEN 2 and APU GEN is the same for A340.

IDG 1 GEN. ON LINE CONNECTION

The APU GEN supplies the LH side. When ENG 1 is running and IDG 1 parameters are within the accepted limits, GCU 1 issues the "D" signal to the ECMU's upon closure of GCU Power Ready Relay (PRR).

IDG 1 GEN. OUTPUT IS IN PHASE WITH APU GEN. OUTPUT

The FRU sends the APU GEN frequency reference to GCU 1. When IDG 1 frequency and phase angle are within limits of the frequency reference (APU GEN), GCU 1 issues the "S1" signal to both ECMUs. The "S1" signal indicates that IDG 1 is ready to be momentarily placed in parallel with the APU GEN.

PHASE ALIGNMENT

IDG 1 SUPPLY LH SIDE ELECTRICAL NETWORK

ECMU 1 closes GLC 1 to place the IDG 1 in momentary parallel with the APU GEN on LH side electrical network. Then BTC 1 opens. IDG 1 powers the LH side electrical network and the APU GEN is disconnected from electrical network (for A340, APU GEN will be disconnected from AC BUS 1-1 and will be supply AC BUS 1-2). The NBPT is then completed.

BTC FAILURE

The A/C is powered by the APU GEN for the LH side busbar(s) and EXT PWR A for the RH side busbar(s) (SIC is open).

When ENGINE MASTER SW (fuel lever) 1 is set to ON, a NBPT occurs between the APU GEN and IDG 1. Normally, 80 ms after closing of GLC 1, ECMU opens BTC 1.
If BTC 1 stays closed after 130 ms, ECMU 1 opens the APU GLC. If it remains closed, after 160 ms, GCU 1 takes over and ensures BTC 1 opening by using the BTC lock-out function in the GCU. If the BTC 1 still remains closed, after 220 ms, the GCU will trip the generator control relay (GCR) and the PRR inside the GCU that will open the GEN 1 GLC and remove GEN 1 from the AC BUS. This is the back-up Inadvertent Paralleling Trip function inside the GCUs to protect against contactor failure and ECMUs failure of managing the AC contactors. The GCUs and the GAPCU monitor the respective AC contactors (Contactor Strings - CTR STG) to accomplish this ultimate Inadvertent Paralleling Trip protection.

NOTE: Note:
- BTC lock-out function is automatically reset by the GCU,
- the back-up Inadvertent Paralleling Trip function is only reset two times by cycling the corresponding GCU P/BSW,
- cold start resets automatically all Inadvertent Paralleling Trip protective functions.

G7508471 - G3NT1T0 - FM24D400000003

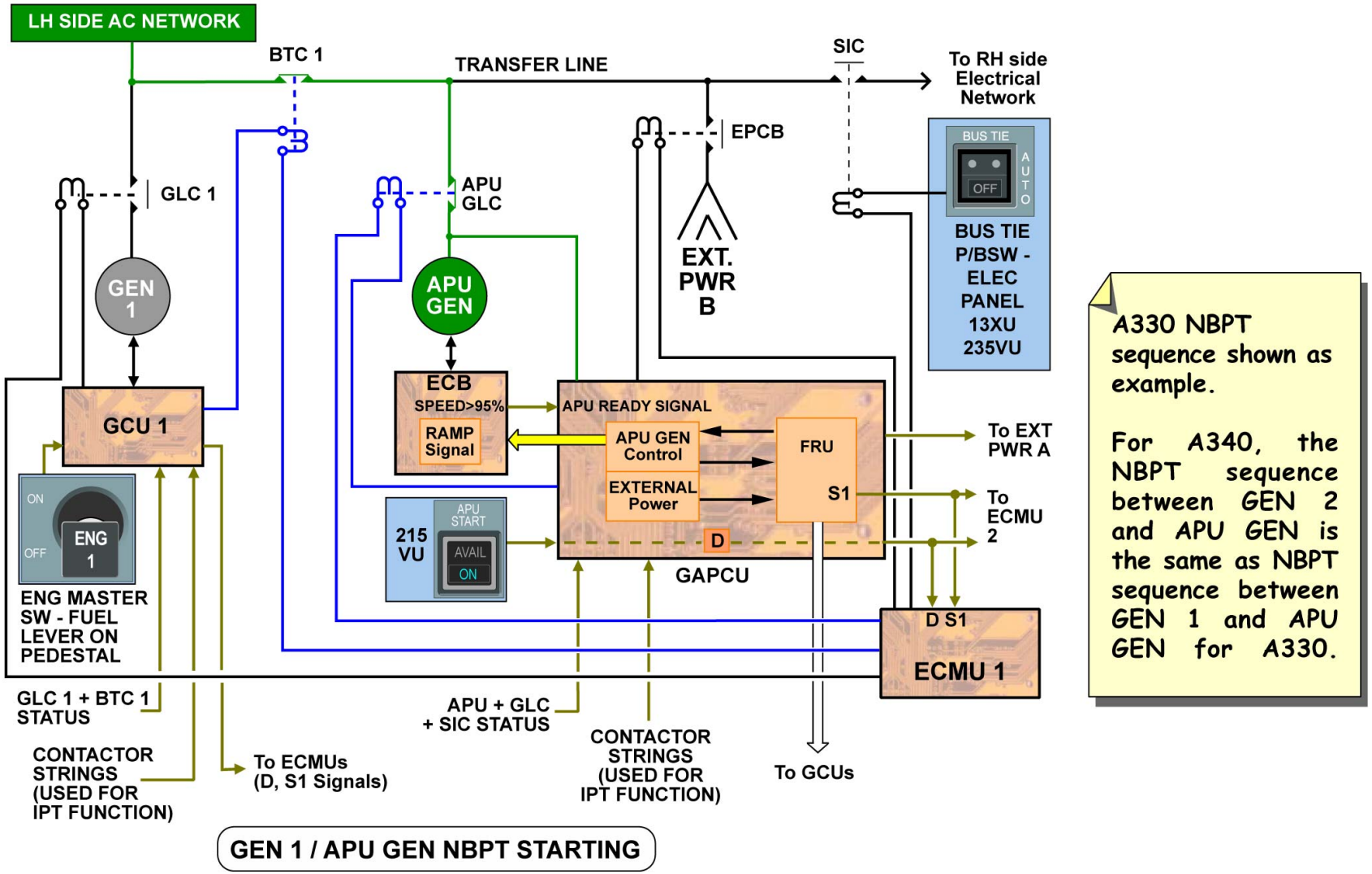

A330 NBPT sequence shown as example.

For A340, the NBPT sequence between GEN 2 and APU GEN is the same as NBPT sequence between GEN 1 and APU GEN for A330.

NBPT OPERATION - GEN 1 / APU GEN NBPT STARTING ... BTC FAILURE

G7508471 - G3NT1T0 - FM24D400000003

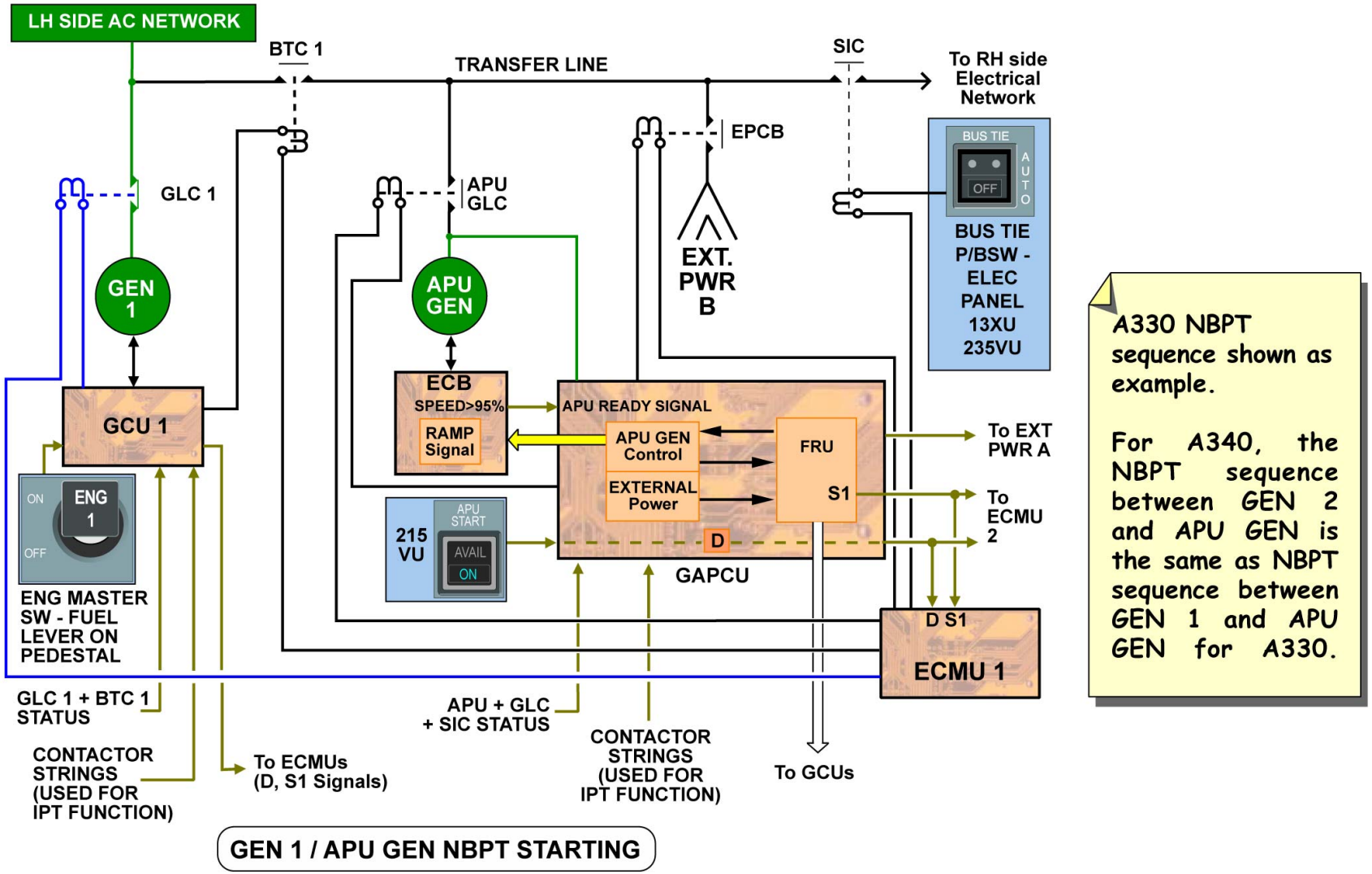

A330 NBPT sequence shown as example.

For A340, the NBPT sequence between GEN 2 and APU GEN is the same as NBPT sequence between GEN 1 and APU GEN for A330.

NBPT OPERATION - GEN 1 / APU GEN NBPT STARTING ... BTC FAILURE

G7508471 - G3NT1T0 - FM24D400000003

This Page Intentionally Left Blank

G7508471 - G3NT1T0 - FM24D400000003

CONTACTORS MANAGEMENT D/O (3)

ABNORMAL OPERATION

ECMU CLASS 2 FAILURE

If a CLASS 2 failure is detected by the ECMUs, a MAINTENANCE STATUS message (ECMU 1 or ECMU 2) is transmitted to the SDACs. The failure message will be displayed on the ECAM SYSTEM DISPLAY (SD), under MAINTENANCE, in white, in the lower right of the ECAM STATUS PAGE. Trouble Shooting Manual (TSM) entry is required using the MAINTENANCE STATUS message.

TOTAL FAILURE OF ONE ECMU

In the case of total loss of an ECMU, a CLASS 1, level 2 ECAM message (amber MASTER CAUTION - SINGLE CHIME and amber ECAM message: ECMU FAULT (on E/WD), with automatic display of AC/EL PAGE on ECAM SD).
Due to the loss of the ECMU, the control of the on-side contactors is lost:
- in the case of loss of ECMU 1, the following contactors are no longer controlled: GLC 1 and 2 (GLC 1 only for A330), BTC 1 and 2 (BTC 1 only for A330), AGLC, EPC-B and SIC,
- in the case of loss of ECMU 2, the following contactors are no longer controlled: GLC 3 and 4 (GLC 2 only for A330), BTC 3 and 4 (BTC 2 only for A330), EPC-A.
The transfer circuit reconfiguration becomes inoperative. Should a ECMU fail, a specific crew procedure message on the E/WD informs the crew to keep the GEN on line. This procedure is the result of the self-holding closed function of the IDG GLC by the GCU. Once the ECMU and the GCU close an IDG GLC, the GCU keeps the IDG GLC closed through a self-holding discrete. If the ENG GEN P/BSW is selected OFF, the failed ECMU will not be able to assist the GCU in re-closing the IDG GLC.

NBPT INHIBITION

The NBPT function is inhibited if the system detects that an electrical transfer with non-synchronized power sources may occur. This behavior is aimed at protecting the electrical network. It can originate from an incorrect status of the contactor string, or by one of the following actions:
- action on the "BUS TIE" cockpit P/B,
- APU auto-shutdown,
- Manual shutdown by means of one of the manual emergency shutdown switches:
- APU SHUT OFF at the nose landing gear,
- APU EMERGency SHUT DOWN on the refuel/defuel panel at the belly fairing.
- APU FIRE PUSH on overhead panel,
If one of the above actions is performed, the GAPCU generates a BITE message and inhibits any subsequent NBPT operation. Refer to the specific TSM task for the specific BITE message.

GAPCU RESET AFTER NBPT INHIBITION

To reset a NBPT function failure, entry into the TSM using the specific ECAM message(s) and/or BITE message(s) is necessary for a proper corrective procedure.

G7508471 - G3NT1T0 - FM24D400000003

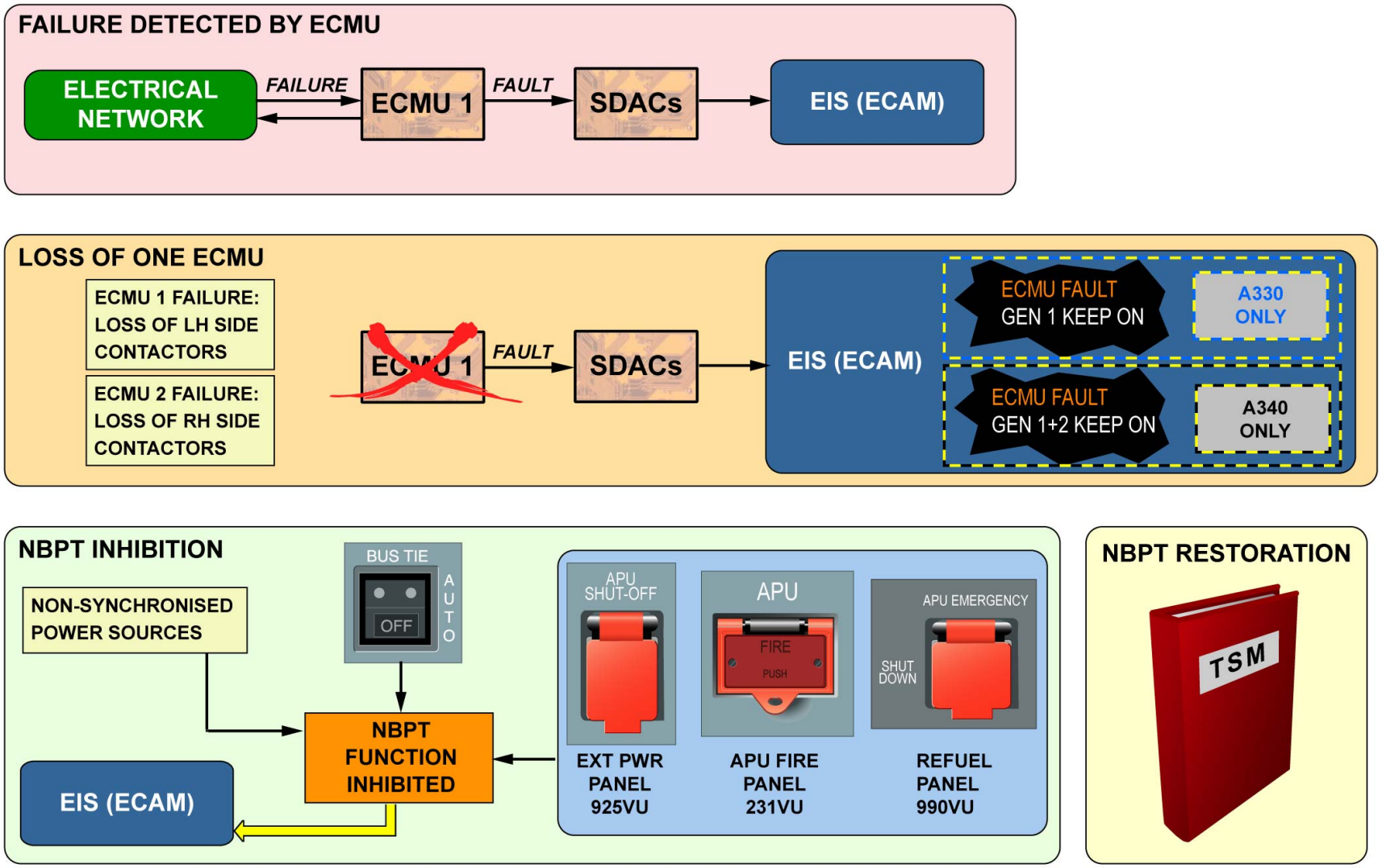

ABNORMAL OPERATION - ECMU CLASS 2 FAILURE ... GAPCU RESET AFTER NBPT INHIBITION

G7508471 - G3NT1T0 - FM24D400000003

MAIN DC GENERATION D/O (3)

GENERAL

The DC main and ESSential generation consists of four identical and interchangeable Transformer Rectifiers (TRs) and their related contactors.
TR1, supplied by AC BUS 1, and TR2, supplied by AC BUS 2, compose the DC main generation. These TRs respectively supply DC BUS 1 and DC BUS 2.
The APU TR, supplied by AC BUS 2, is used to charge the APU BATtery and to start the APU.
DC ESS network is supplied by ESS TR, which is supplied by:
- AC BUS 1 in normal condition,
- AC BUS 2 in abnormal condition,
- EMERgency GENerator in emergency condition.

Each TR contains:
- a transformer part,
- a rectifier part,
- a monitoring card.

G7508471 - G3NT1T0 - FM24D500000003

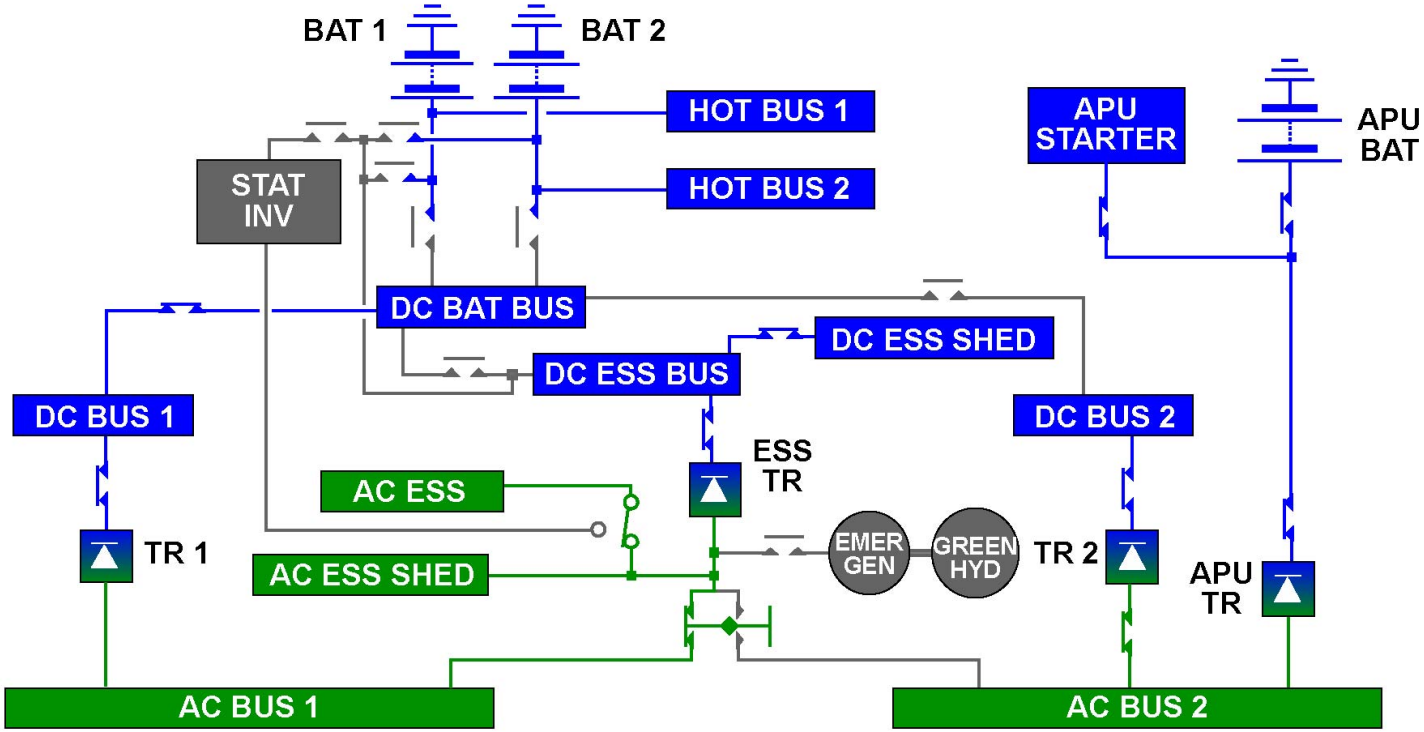

GENERAL

G7508471 - G3NT1T0 - FM24D500000003

MAIN DC GENERATION D/O (3)

MAIN TRANSFORMER RECTIFIERS 1 AND 2 (TR 1 AND TR 2)

This topic presents TR1 and TR2 description and operation.

TRANSFORMER RECTIFIER 1

TR1 converts the 115 VAC power from AC BUS 1 into 28 VDC. The monitoring card is supplied by the internal 28 VDC and from the bus 401PP as a back-up supply. The 28 VDC output is connected to DC BUS 1 via contactor 5PU1.

TRANSFORMER RECTIFIER 2

TR2 converts the 115 VAC power into 28 VDC from AC BUS 2 via the contactor 2PU, or on ground, with only EXTernal PoWeR A connected and the MAINTenance bus switch in ON position via contactor 6XX.
The monitoring card is supplied by the internal 28 VDC and from bus 101P as a back-up supply. If TR1 is not operating (5PU1 open), the monitoring card of TR2 is supplied from bus 403PP.
The 28 VDC output is connected to the DC BUS 2 and to the DC SERVICE BUS respectively via contactor 5PU2 and 1PN. The 28 VDC output can also be connected to the DC SERVICE BUS via contactor 1PX, only on ground with EXT PWR A connected and the MAINT bus switch in ON position.

INTERFACES

Both main TR1 and TR2 interface with following systems:
- System Data Acquisition Concentrators (SDACs) for ECAM warning and indications,
- Electrical Contactor Management Units (ECMUs) for control of contactors 1PC1 (CNTOR - 28VDC BUS 1 / DC BAT BUS SPLY) and 1PC2 (CNTOR - 28VDC BUS 2 / DC BAT BUS SPLY) for automatic transfer and short circuit protection,
- Centralized Maintenance Computers (CMCs) for TR reset.

OPERATION

Each TR is operative if the AC corresponding busbar is supplied. If all parameters are correct, the TR contactors (5PU1 or 5PU2) closes and connects the power to the corresponding DC busbar.
In normal operation:
- TR1 and TR2 are supplied and active,
- 1PC1 is closed and 1PC2 is open.
If TR1 fails (not due to over-current):
- TR2 is still supplied by AC BUS 2,
- 1PC1 stays closed and 1PC2 closes.
If TR1 and TR2 fail (not due to over-current):
- 1PC1 and 1PC2 are open and DC BUS 1 and DC BUS 2 are not supplied. The DC BAT BUS will be momentarily supplied for approximately 7 seconds. After 7 seconds the DC BAT BUS will not be supplied.

G7508471 - G3NT1T0 - FM24D500000003

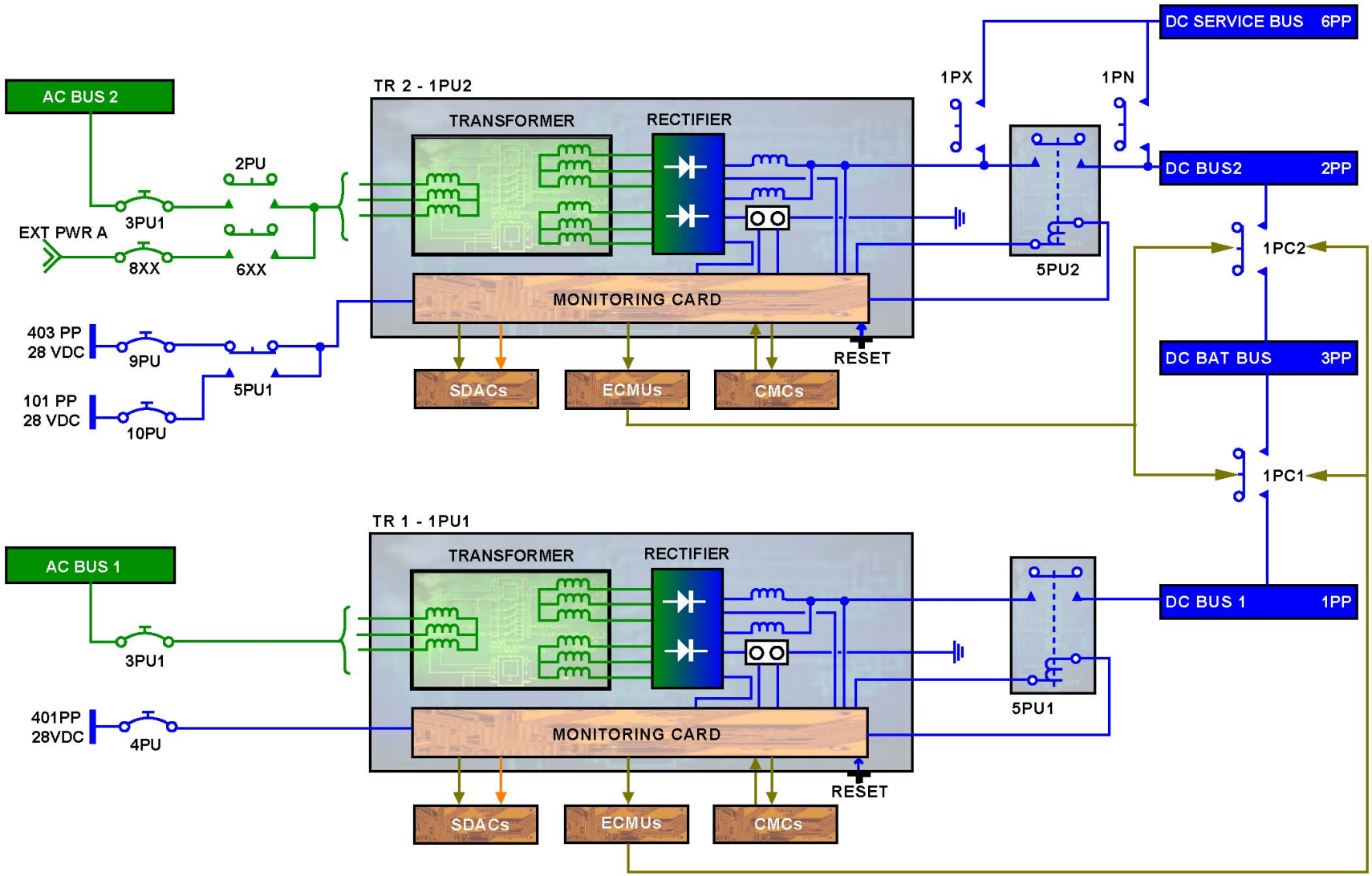

MAIN TRANSFORMER RECTIFIERS 1 AND 2 (TR 1 AND TR 2) - TRANSFORMER RECTIFIER 1 ... OPERATION

G7508471 - G3NT1T0 - FM24D500000003

MAIN DC GENERATION D/O (3)

APU TRANSFORMER RECTIFIER (APU TR)

This topic presents the APU TR description and operation.

DESCRIPTION

The APU TR converts the 115 VAC power from AC BUS 2 into 28 VDC.
The monitoring card is only supplied by an internal 28 VDC.
The 28 VDC output is connected:
- directly to busbar 909PP,
- via contactor 7PU: to busbar 309PP and APU starter,
- via contactor 5PB: to the APU BAT for charging and busbar 709PP.

NOTE: the APU starter is able to supply 3 successive APU starts every hour with an interval of 1 minute between 2 successive starts.

INTERFACES

APU TR interfaces with:
- SDACs for ECAM warning and indications,
- CMCs for TR reset.

OPERATION

On the APU TR, if AC BUS 2 is supplied, the closed contactors 7PU connect the DC power to the contactors 5KA and 10KA, and also 5PB to respectively allow the APU starter and the APU BAT to be supplied. The contactors 5KA is closed when the APU START P/BSW is pressed.

NOTE: The backup contactor 10KA is closed 1.5 sec before the contactor 5KA.

Otherwise 5PB is closed if the APU BAT needs charging.

G7508471 - G3NT1T0 - FM24D500000003

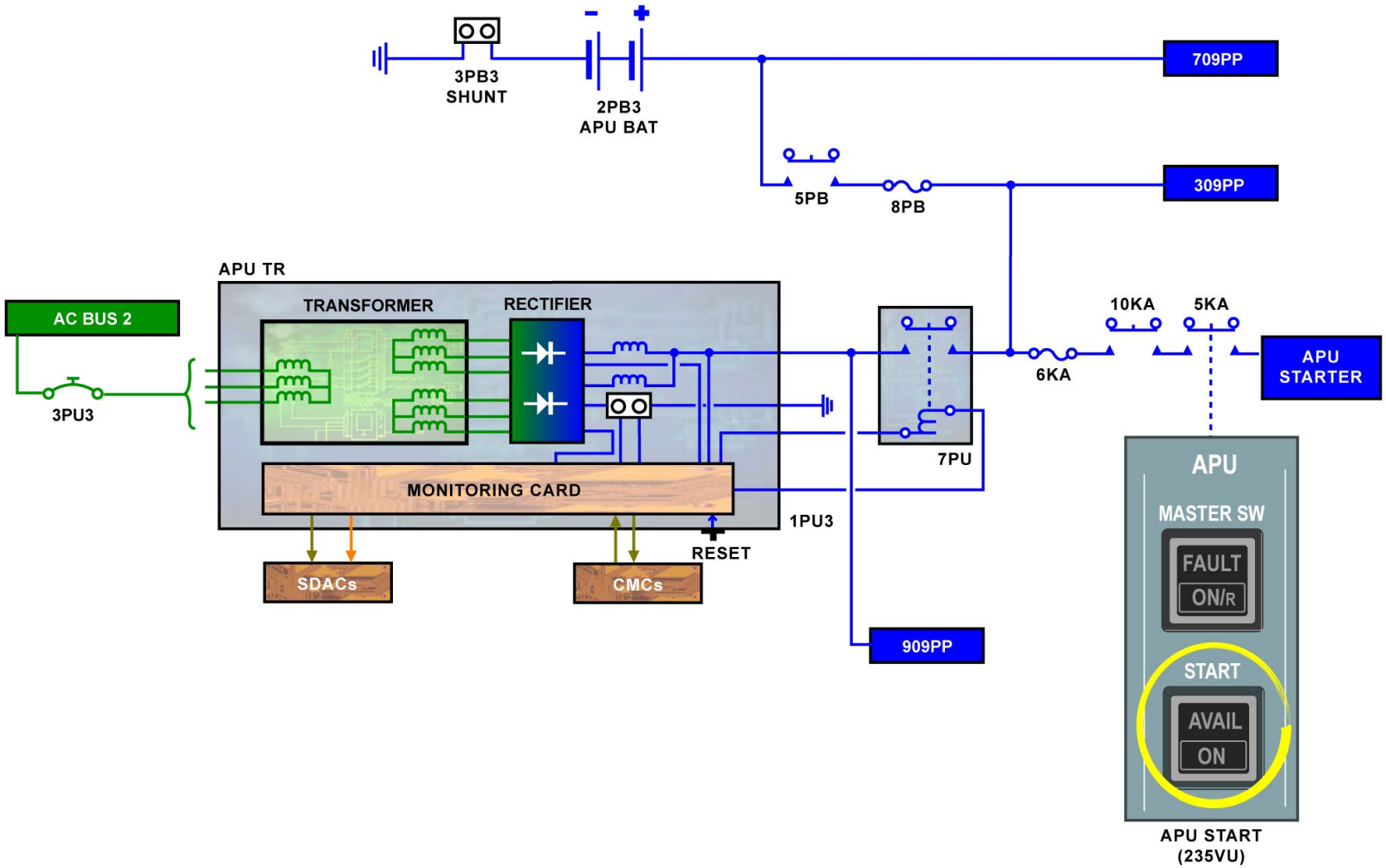

APU TRANSFORMER RECTIFIER (APU TR) - DESCRIPTION ... OPERATION

MAIN DC GENERATION D/O (3)

ESSENTIAL TRANSFORMER RECTIFIER (ESS TR)

This topic presents the description and operation of the ESS TR and the description of the monitoring card of each TR.

DESCRIPTION

The ESS TR can be supplied with 115 VAC / 400 Hz 3 phases from:
- AC BUS 1 in normal configuration,
- AC BUS 2 automatically in case of loss of AC BUS 1 (abnormal configuration),
- EMER GEN automatically in case of loss of AC BUS 1 and 2 (emergency configuration).

The 28 VDC output is connected to the DC ESS BUS via the contactor 3 PE.
The monitoring card is supplied by the internal 28VDC and, as a back up supply, from DC BUS 101PP.

MONITORING CARD (COMMON FOR ALL 4 TRS)

The ESS TR monitoring card is taken as an example, the protection principle is the same for all 4 TRs.
The monitoring card contains the power supply module and the control and protection circuits.
Each TR is protected against:
- over-current,
- overheat (Transformer and Rectifier),
- open or short circuited diode (Rectifier).

Whenever a protection circuit is triggered, the DC output contactor (3PE for ESS TR) opens and remains open until a reset is performed.
A reset can be performed :
- from the MCDU via the CMCs,
- from the reset button on the TR housing.

INTERFACES

The ESS TR interfaces with:
- SDACs for ECAM warnings and indications,
- CMCs for TR reset.

OPERATION

The ESS TR is operative when it is supplied by AC BUS 1, or AC BUS 2 or EMER GEN. If all parameters are correct, the DC contactor 3PE closes and connects the power to the DC ESS network.
The DC ESS SHED BUS is lost in case of:
- loss of both AC BUS 1, AC BUS 2 and if CSM/G is supplied by the Ram Air Turbine (RAT),
- A/C electrical network on battery only (emergency configuration).

To avoid contactor 3PE opening during AC power transfer, the contactor 6PE opens if busbar 101PP is no longer supplied; this connects a ground to 3PE to keep it energized.
In case of ESS TR failure (not due to over-current), and if TR1 and TR2 are available, the contactor 4PC closes to allow the DC ESS BUS to be supplied from DC BUS 1 or DC BUS 2 via DC BAT BUS.

G7508471 - G3NT1T0 - FM24D500000003

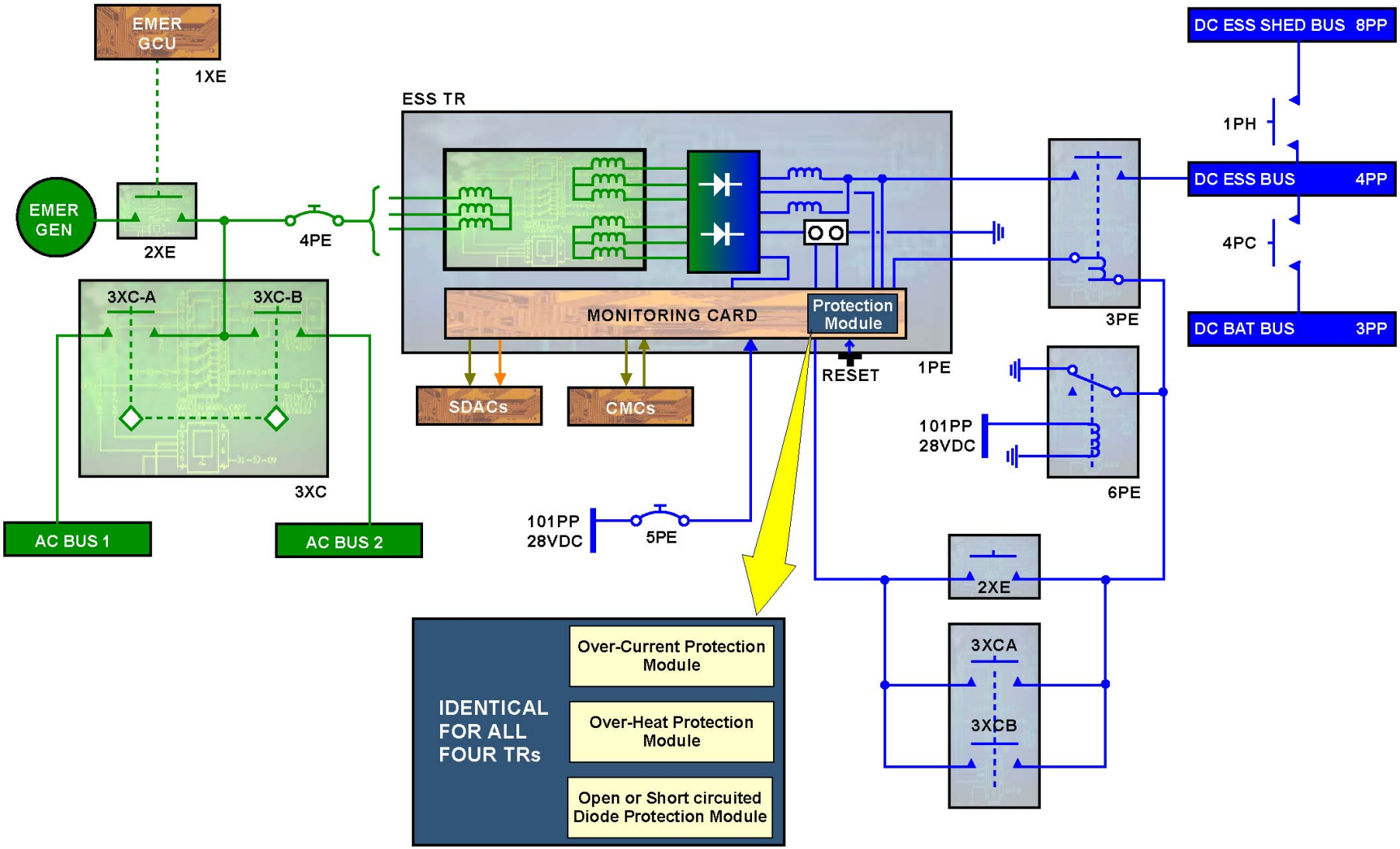

ESSENTIAL TRANSFORMER RECTIFIER (ESS TR) - DESCRIPTION ... OPERATION

G7508471 - G3NT1T0 - FM24D500000003

EMERGENCY DC GENERATION D/O (3)

BATTERIES

There are three batteries on board. The two main batteries, installed in the avionic bay, are used as a backup supply, when no other power source is available. The third battery, located in the APU compartment, is independent of the others and is mainly used for the APU starting.
The three BATteries are identical and interchangeable. Each BAT is ventilated by two ducts. The differential pressure between the cabin and the outside is used to provide battery ventilation.
Each BAT has 20 nickel cadmium accumulators in a titanium case, except for A340-500 and A340-600 in a stainless steel case. The BAT nominal voltage is 24VDC and the nominal capacity is 40 Ah, except for A340-500 and A340-600 with a nominal capacity of 50 Ah.
Each battery is associated to one Battery Charge Limiter (BCL) which ensures the BAT charge/discharge and protection by controlling the BAT contactor.

APU BATTERY

The APU BAT is mainly used for the APU start. The APU BCL ensures BAT charge/discharge and protection in the same way as for the main BATs.

MAIN BATTERIES

The two main BATs are used to supply the STATic INVerter and the DC ESS BUS via the contactors 2PC and 3PC.
HOT BUSES are directly connected to BATs and are always supplied.

BATTERY CONTROL, INDICATING AND MONITORING

Each BCL is controlled by means of a P/BSW located on the overhead ELEC panel (235VU).

In OFF position the P/BSW is released out. The BCL is de-energized and the BAT cannot be connected to the BAT BUS. The OFF legend comes on white. The message 'BAT OFF' is displayed on the ECAM.
In ON position the P/BSW is pressed in. The BCL is energized and automatically monitors and controls the coupling or uncoupling of the BAT.
If a BAT thermal runaway or short circuit is detected, the BAT contactor automatically opens and the FAULT amber legend illuminates in the BAT P/BSW with the ECAM warning [BAT (1)(2)(APU) FAULT]. In this case, the P/BSW must be released out (OFF position).
The battery parameters are displayed on the ECAM EL/DC page and on the voltmeter which is located on the overhead ELEC power panel.
System failures and BITE data are sent to the Centralized Maintenance Computers (CMC).

G7508471 - G3NT1T0 - FM24D600000002

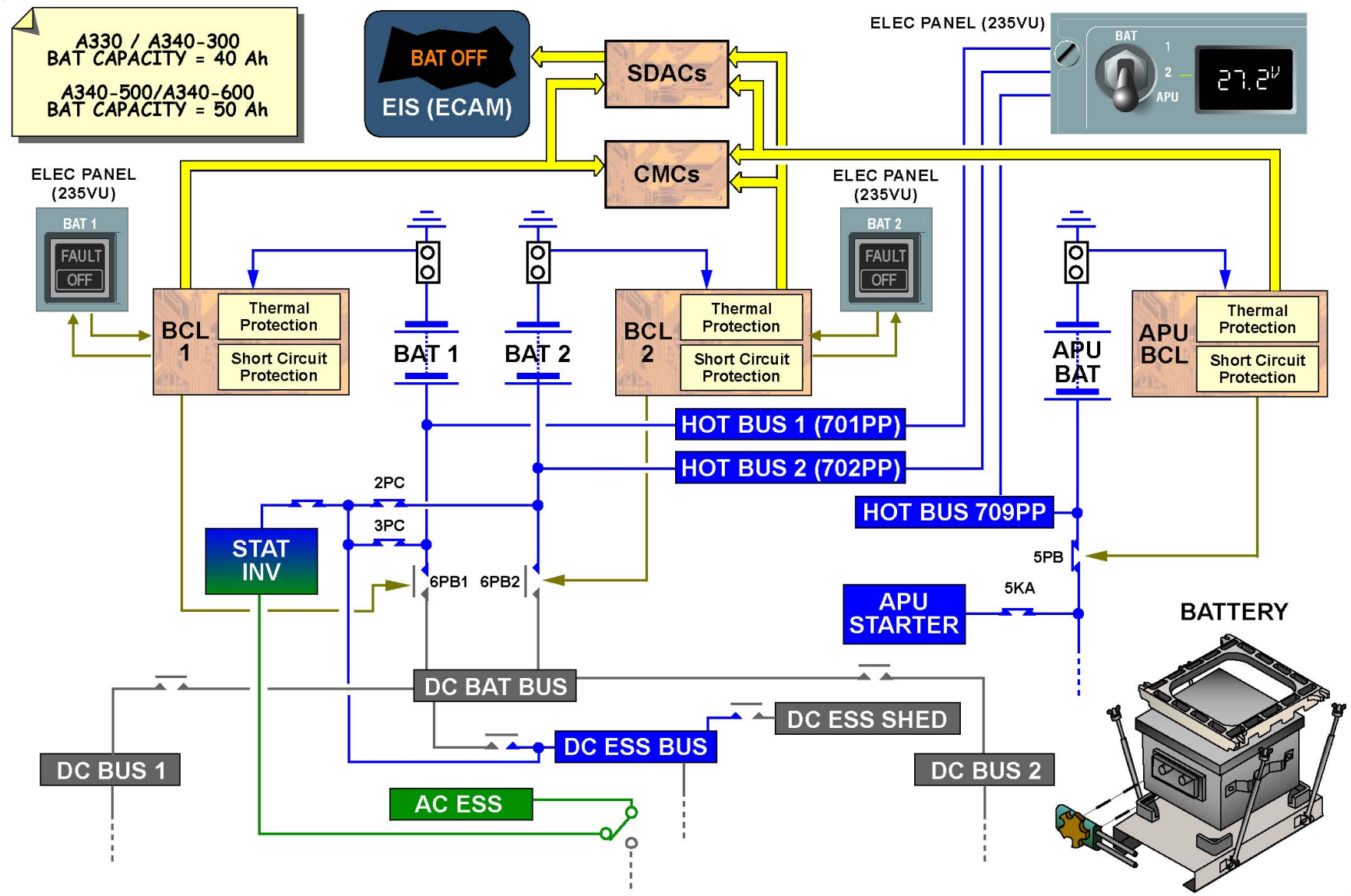

BATTERIES - APU BATTERY ... BATTERY CONTROL, INDICATING AND MONITORING

G7508471 - G3NT1T0 - FM24D600000002

EMERGENCY DC GENERATION D/O (3)

BATTERY CHARGE LIMITER (BCL)

BCL 1 is taken for example. The principle is the same for BCL 2.
The three BCLs are identical and interchangeable. A PIN programming determines the position of the BCL (1, 2 or APU) and the A/C type.
The main functions of the BCLs are to control, monitor and protect the corresponding BATtery, control the BAT contactor and the BAT FAULT warning. BCL 1 and BCL 2 also control the EMER GEN FAULT warning.
The BCL BAT contactor control functions are:
- ensuring BAT charging,
- protect the BAT against thermal runaway or short circuit,
- prevent complete BAT discharge on the ground
- maintain HOT BUS supply in case of short circuit on the BAT BUS.

Note that BCL 1,2 also ensure power supply of DC BAT BUS when no electrical power is available.
Each BCL is supplied by its own battery via sub-busbar 301PP, provided the corresponding battery P/BSW is pressed in.

BATTERY CHARGE

When BAT voltage is lower than 26.5 V and DC BAT BUS higher than 27 V, the BAT contactor 6PB1 is closed for battery charging.
When the charge current is less than 4 A decreasing for 10 seconds on ground, or 15 minutes in flight, the BAT contactor 6PB1 opens.
When the BAT voltage reaches 26.5 V, another charge cycle starts.

PROTECTIONS

If the charge current is above 10 A and increasing, the thermal runaway protection opens the BAT contactor and the warnings are triggered.
If the charge current is greater than 150 A for 90 seconds, there is a battery short circuit, so the BAT contactor opens and the warnings are triggered.

After these 2 types of failure configurations, the corresponding BAT P/BSW must be set to OFF. Setting the P/BSW to ON again resets the BCL.
To prevent the A/C against a complete BAT discharge, on ground, when the BAT voltage is lower than 23 V for 60 seconds, the BAT contactor 6PB1 opens automatically.
In order to maintain the HOT BUS supply, the BAT contactor 6PB1 opens under these conditions:
- discharge current greater than 100 A for 0.3 seconds (software protection for DC BAT BUS short circuit),
- discharge current is greater than 400 A and BAT voltage less than 13 V for 5 ms (hardware protection).

On ground with speed less than 50 Kts, when all AC BUSES are not supplied, BCL 1 and 2 close contactors 6PB1 and 6PB2 to supply DC BAT BUS 3PP.

FAULT LIGHTS

In EMER configuration, if the Constant Speed Motor/Generator (CSM/G) is inoperative, the EMER GEN FAULT light comes on red on the EMER ELEC POWER panel. This light is controlled by BCL 1 and 2.
Note that EMER GEN shutdown signal is sent to the BCL to illuminate the red FAULT light.
In case of thermal runaway or short circuit, the FAULT legend of the BAT P/BSW comes on amber.

G7508471 - G3NT1T0 - FM24D600000002

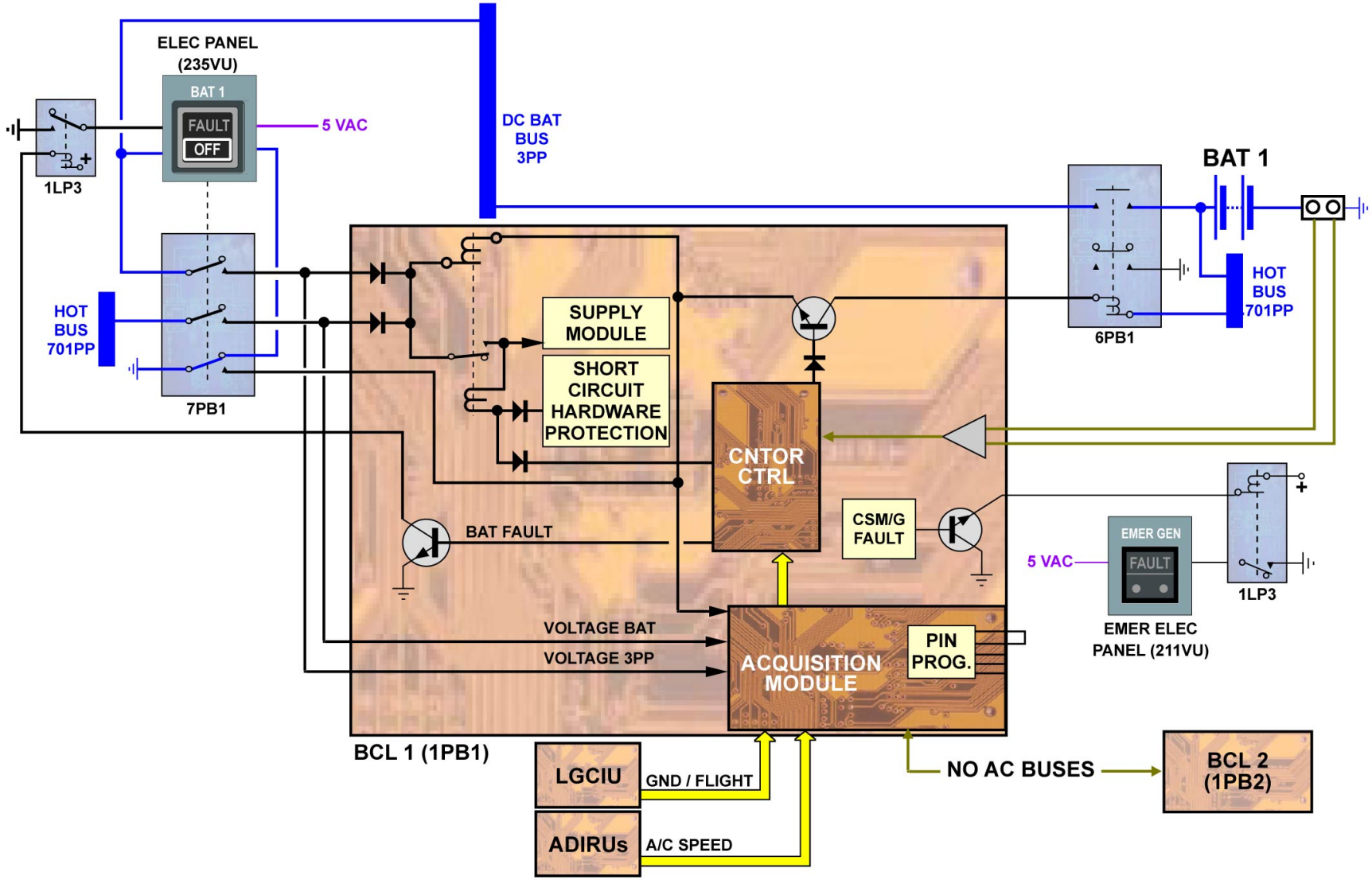

BATTERY CHARGE LIMITER (BCL) - BATTERY CHARGE ... FAULT LIGHTS

G7508471 - G3NT1T0 - FM24D600000002

EMERGENCY DC GENERATION D/O (3)

BATTERY CHARGE LIMITER (BCL) (continued)

APU STARTING

This topic explains the APU BCL functions and operation.
The charge and discharge cycles are similar with BCL 1 and BCL 2.
The main functions of APU BCL are to control the APU BAT contactor for the control, monitoring and protection of the APU BAT.
When the APU starting sequence is initiated, the APU BCL closes the APU BAT contactor 5PB. This provides power to start the APU.
As soon as the APU MASTER P/BSW is set to on, the APU Electronic Control Box (ECB) provides a signal to the APU BCL to close contactor 5PB.
If the APU Transformer Rectifier (TR) is operating, its output is connected to 309PP. If the APU TR is not operating, contactor 7PU sends a ground signal to the APU BCL to increase the current limitation. This allows APU STARTING on battery alone.
To prevent complete discharge of APU BAT during APU start, APU BCL opens contactor 5PB in the following cases:
- if APU BAT voltage is lower than 9.5 V during 1.5 seconds,
- or if APU BAT voltage is lower than 12 V during 15 seconds.

G7508471 - G3NT1T0 - FM24D600000002

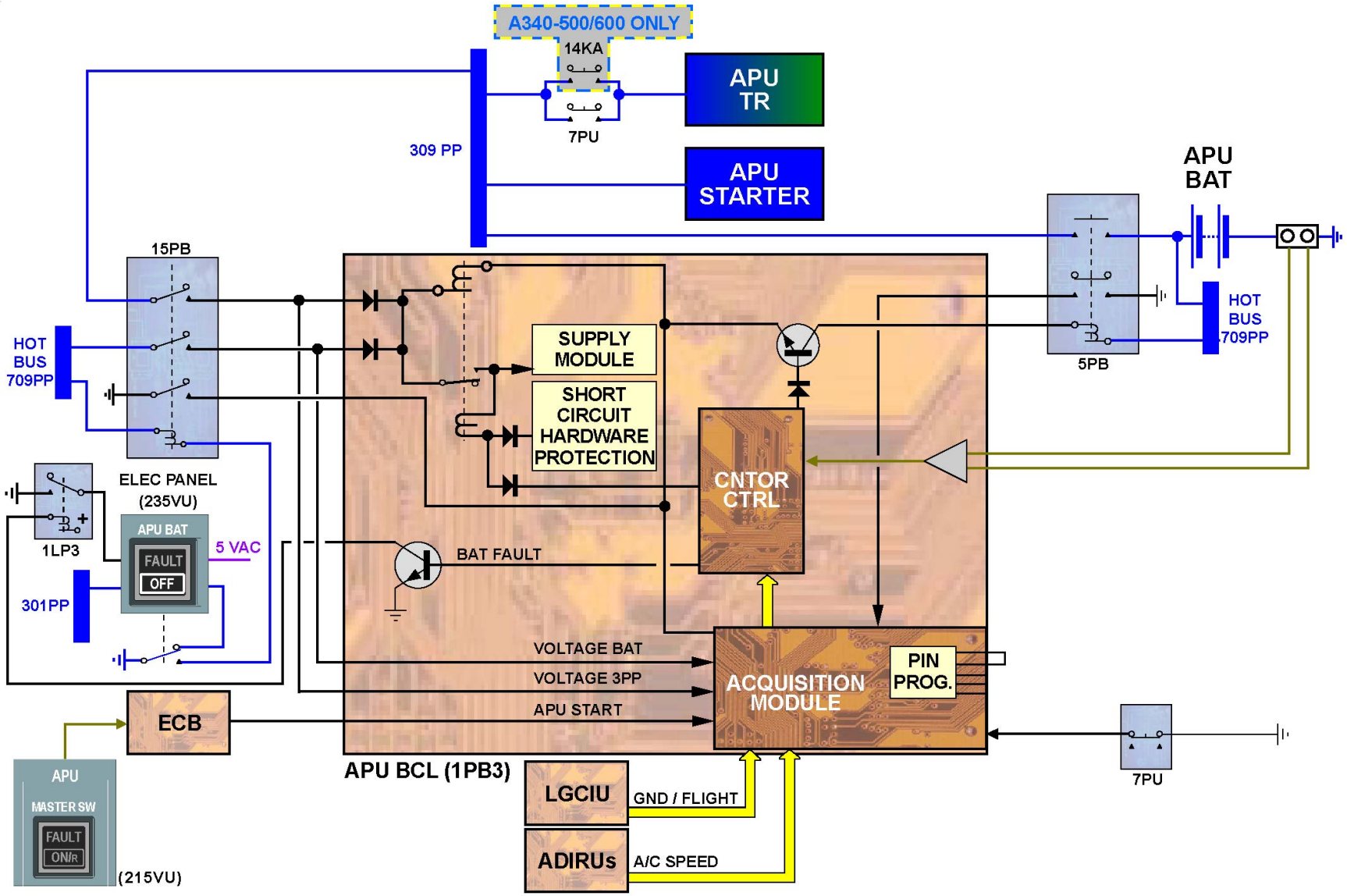

BATTERY CHARGE LIMITER (BCL) - APU STARTING

G7508471 - G3NT1T0 - FM24D600000002

EMERGENCY DC GENERATION D/O (3)

DC NORMAL GENERATION SWITCHING

This circuit monitors and controls the DC normal network supply (DC BUS 1, DC BUS 2 and DC BAT BUS).
The switching enables:
- normal supply of the DC busbars,
- automatic power transfer in case of failure and,
- transfer inhibition in case of a short circuit.

DC NORMAL BUS SWITCHING

The switching circuit consists of contactors 1PC1 and 1PC2. They are controlled in parallel by the Electronic Contactor Management Units 1 and 2 (ECMU 1 and 2).

ECMU

The DC supply configuration is sensed by the ECMUs. Due to supply changes, the ECMUs provide control logic for contactors 1PC1 and 1PC2.
In normal supply configuration, contactor 1PC1 is closed and 1PC2 is opened.

NORMAL OPERATION

In normal configuration the LH side AC BUS is supplied and TR1 is operating (contactor 5PU1 closed), ECMU1 internal control logic closes contactor 1PC1. 1PC1 contactor control logics only active in ECMU 1 and ECMU 2 internal control logic keeps contactor 1PC2 open.

ABNORMAL OPERATION

If TR1 fails, not due to over-current, ECMU1 detects that 5PU1 is open, and then opens 1PC1.
ECMU2 detects that 1PC1 is open and closes 1PC2 to supply DC BAT BUS.
As soon as 1PC2 is closed, ECMU2 closes 1PC1 to supply DC BUS 1 from DC BAT BUS.
TR2 now supplies the three DC buses (DC BUS 2, DC BAT BUS and DC BUS1).
If TR1 fails due to over-current, contactor 5PU1 opens. ECMU1 opens 1PC1.
The TR1 overcurrent signal inhibits the closure of 1PC2 and 1PC1.
If TR1 and TR2 are faulty, contactors 1PC1 and 2, and 5PU1 and 2 stay open.
Power is no longer supplied on DC BUS 1, DC BUS 2 and DC BAT BUS.

G7508471 - G3NT1T0 - FM24D600000002

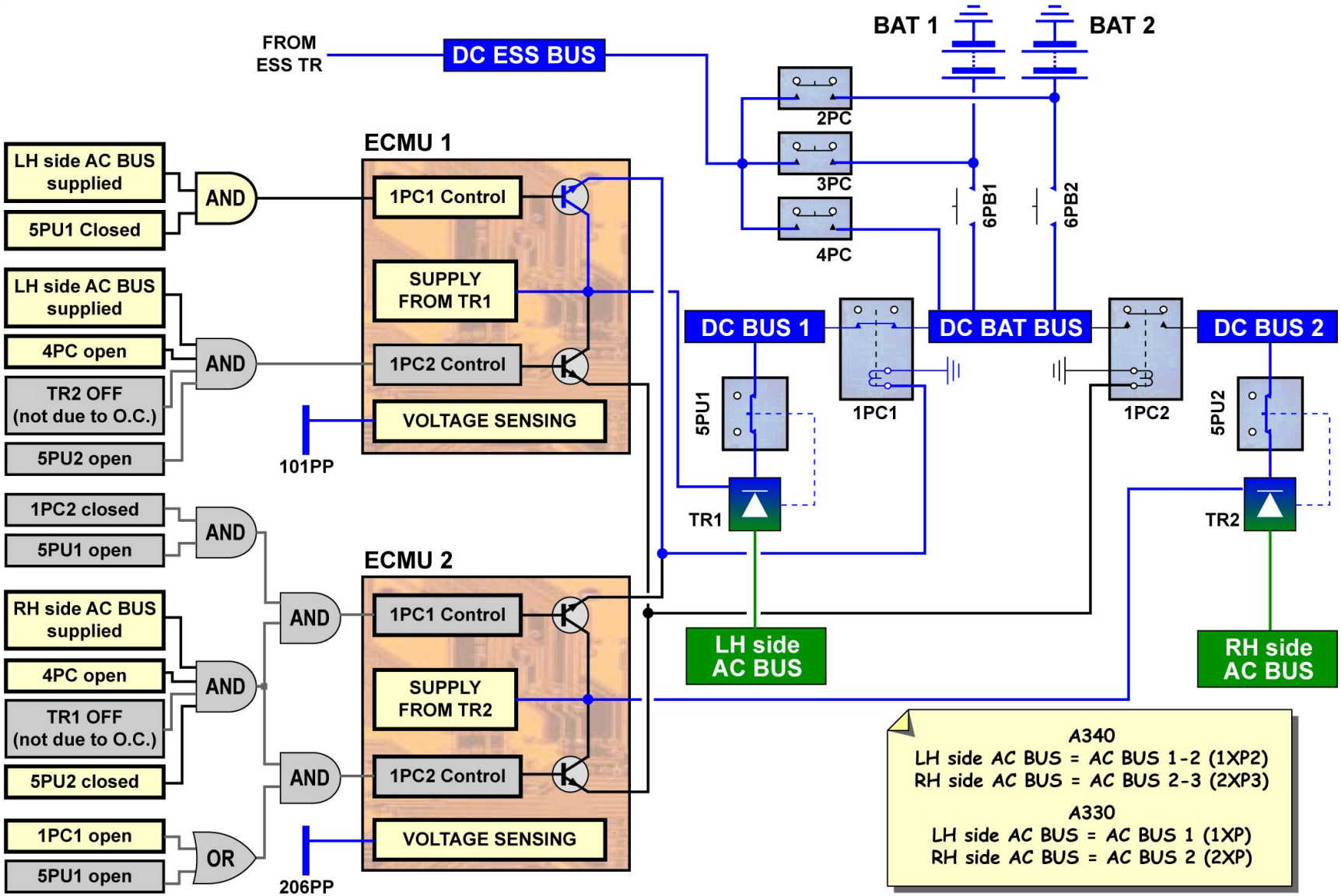

DC NORMAL GENERATION SWITCHING - DC NORMAL BUS SWITCHING ... ABNORMAL OPERATION

G7508471 - G3NT1T0 - FM24D600000002

EMERGENCY DC GENERATION D/O (3)

DC ESSENTIAL GENERATION SWITCHING

This topic explains the control circuit of the DC ESS power. The DC ESS network consists of:
- DC ESS BUS 4PP,
- DC ESS SHED BUS 8PP.

The control circuit enables the DC ESS network to be supplied:
- from the ESS TR in normal operation,
- from the BAT BUS in abnormal operation,
- from the BATs in emergency operation.

OPERATION

In normal supply configuration, the ESS TR supplies:
- the DC ESS bus 4PP via the TR contactor 3PE,
- and the DC ESS SHED bus 8PP via the contactor 1PH.

G7508471 - G3NT1T0 - FM24D600000002

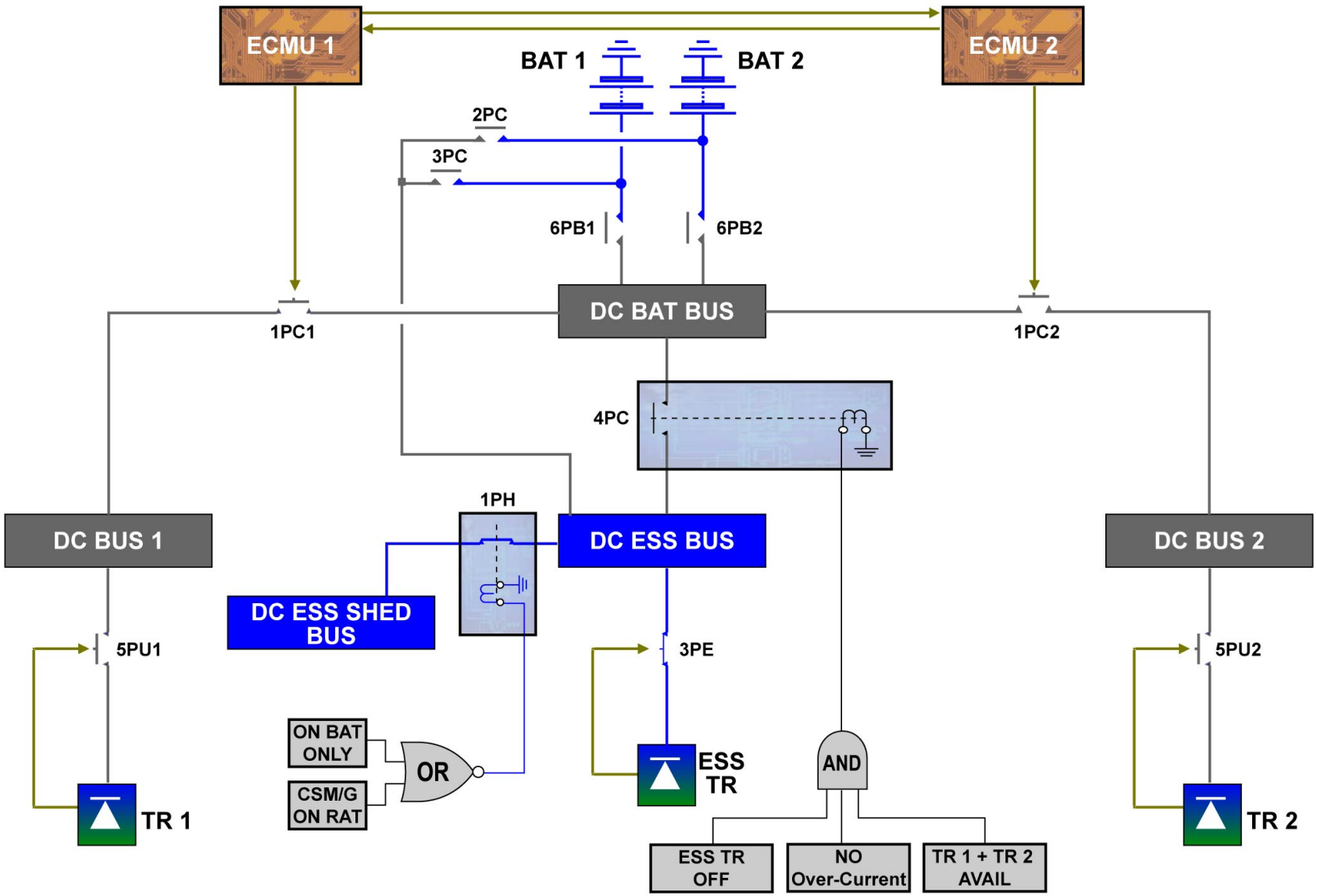

DC ESSENTIAL GENERATION SWITCHING - OPERATION

G7508471 - G3NT1T0 - FM24D600000002

EMERGENCY DC GENERATION D/O (3)

DC ESSENTIAL GENERATION SWITCHING (continued)

ABNORMAL OPERATION

In case of ESS TR fault, not due to over-current (3PE open), the contactor 4PC closes and connects power from BAT BUS to the DC ESS network provided:
- TR1 supplies DC BUS 1 (5PU1 closed) and BAT BUS (1PC1 closed),
- and TR2 only supplies DC BUS 2 (5PU2 closed, 1PC2 open).

In case of ESS TR fault due to over-current, the contactor 3PE opens and either opens contactor 4PC if already closed or prevents contactor 4PC from closing. The essential network is then no longer supplied.
In case of TR1 and ESS TR fault not due to over-current, 5PU1 is open and the DC ESS network is completely lost.
The TR2 maintains the supply to the DC NORMAL network (DC BUS 2, DC BAT BUS and DC BUS 1).
Principle is the same with TR2 and ESS TR faulty.

EMERGENCY OPERATION

On batteries only, the contactors 2PC and 3PC are closed and only the DC ESS BUS is supplied (1PH remains open).

G7508471 - G3NT1T0 - FM24D600000002

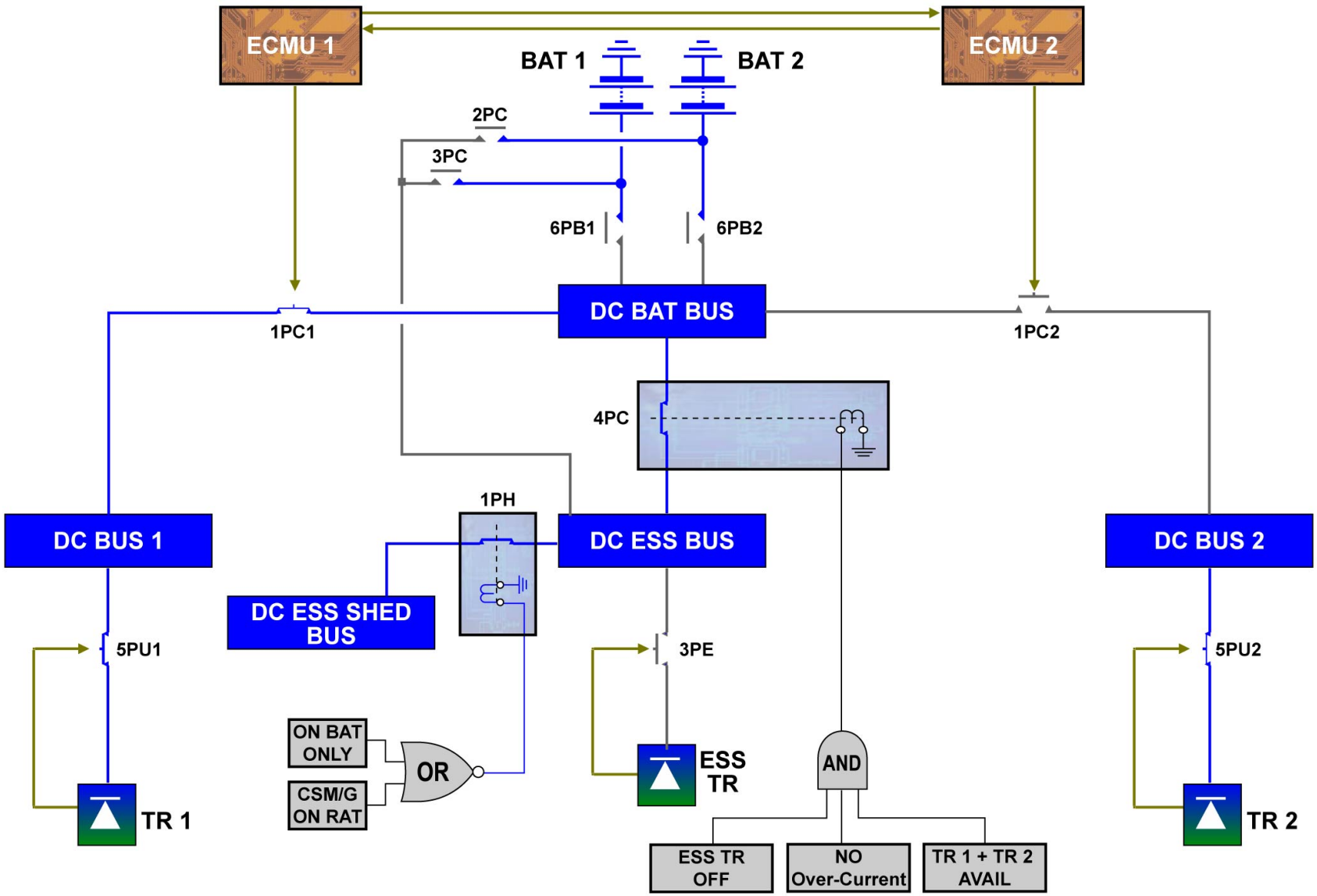

DC ESSENTIAL GENERATION SWITCHING - ABNORMAL OPERATION & EMERGENCY OPERATION

G7508471 - G3NT1T0 - FM24D600000002

LOAD MANAGEMENT D/O (3)

GENERAL

Electrical network of the A/C is protected from overload. Electrical Contactor Managements Units (ECMUs) protect the galley supply and sub-busbars supply from overload.
To protect the network, ECMUs open Remote Control Circuit Breakers (RCCBs) to partially or totally shed the supply of galleys and / or sub-busbars. The Remote control Circuit Breaker (RCCB) is used to fulfill the following functions: electrical line protection (circuit breaker tripping function), electrical load switching (contactor switching function).

LOAD MANAGEMENT DESCRIPTION

The ECMUs monitor parameters of the AC power source(s) and control the contactors to allow the supply of the electrical networks.
If the corresponding Generator Control Unit (GCU) or GROUND AUXILIARY POWER CONTROL UNIT (GAPCU) detect a power source overload, it sends an overload signal to ECMUs.
When ECMUs receive an overload signal, they analyze the electrical network configuration. To remove the overload condition, ECMUs directly act on the corresponding RCCBs. There are two types of RCCBs:
- RCCBs that control and protect the power supply to the galley feeders,
- RCCBs that control and protect the power supply to the sub-busbars.
In case of overload detection by an AC power source, ECMUs shed, partially or totally, the supply of galleys or sub-busbars by controlling the status of RCCBs (contactor switching function of a RCCB). Each RCCB controls directly the power supply to a galley feeder or a sub-busbar and opens automatically (circuit breaker tripping function of a RCCB) removing the power supply in case of an overload or a short circuit.
ECMUs monitor and control the opening and/or closure of the RCCBs (the contactor switching function),which allow the galleys and sub-busbars to be supplied, to enable the shedding functions. The shedding logic is defined by:
- the type of aircraft,
- the aircraft configuration (ground/flight),
- the number of available AC sources (Integrated Drive Generators (IDGs), APU GENerator, EXTernal PoWeR A/B),
- the number of installed galleys.

LOAD AUTOMATIC SHEDDING

If the galley supply circuit detects an overload in galleys, a shedding is directly performed via the corresponding RCCB (the circuit breaker tripping function of a RCCB).
In case of overload detected in a sub-busbar, the corresponding RCCB removes the power to the sub-busbar (circuit breaker tripping function of a RCCB). When an AC power source is in overload condition (GEN 1 for example), ECMUs calculate the input load from the power sources and the output load to the galleys and other consumers.
In case of an AC power source overload, the ECMUs can shed (via RCCBs contactor switching function) the galley supply or sub-busbar supply partially or completely in accordance with a shedding sequence priority. These shedding operations could also result from a loss of an AC electrical power sources (for example the loss of a GEN).

LOAD MANUAL SHEDDING

A complete shedding of the galleys can be performed by manually selecting the GALLEY P/BSW to OFF. The GALLEY P/BSW can also be used to reset the galleys loads and sub-busbar loads automatically shed after overload detected by an AC power source.
The function of the GALLEY P/BSW is only operative when the AC Main Distribution COMMERCIAL P/BSW is in its ON position.
When the COMMERCIAL P/BSW is released, the OFF legend comes on, all galleys, sub-busbars and all service buses are no longer supplied.

G7508471 - G3NT1T0 - FM24DB00000002

LOAD RESTORATION

A manual reset (contactor function of a RCCB) can be performed through the RESET P/BSW located on the front face of ECMU or through an ECMU test using the CMS or using the GALLEY P/BSW (for galley and sub-busbar RCCBs) by cycling the GALLEY P/BSW to OFF then back to AUTO. When a RCCB opens automatically after an overload detection (circuit breaker tripping function), it is possible to reset the RCCB by manually pushing the corresponding RCCB RESET P/B, located on the front face of the RCCB. The circuit breaker tripping function is indicated on the RCCB by the RESET P/BSW released (out position) and the visual indication on the RCCB indicates OPEN.

G7508471 - G3NT1T0 - FM24DB000000002

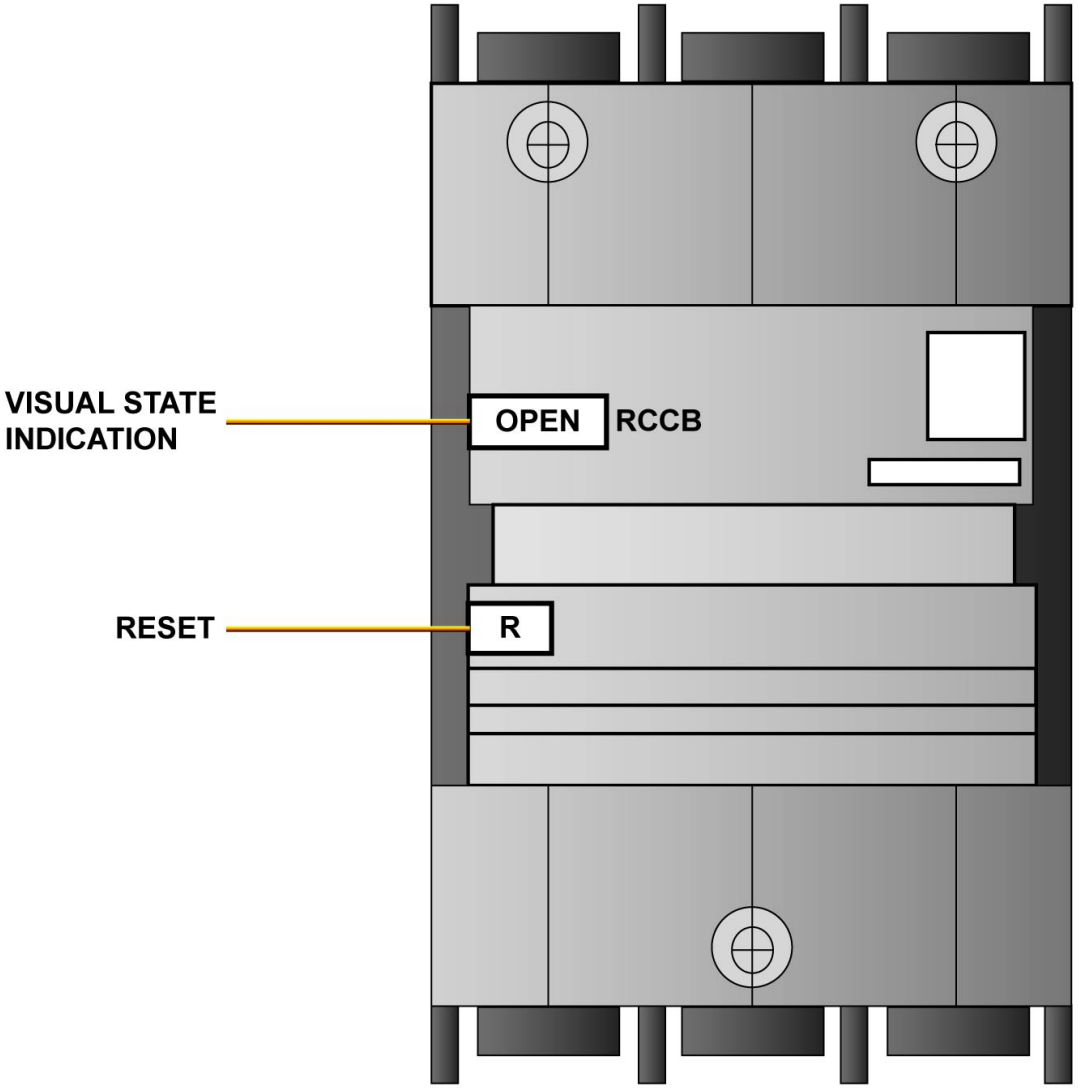

GENERAL - LOAD MANAGEMENT DESCRIPTION ... LOAD RESTORATION

This Page Intentionally Left Blank

G7508471 - G3NT1T0 - FM24DB000000002

LOAD MANAGEMENT D/O (3)

GENERAL (continued)

INDICATING

The status of each RCCB (open or closed) is shown on a visual indication on the front face of the RCCB.
According to the load shed, the ECMUs transmit three different messages to the System Data Acquisition Concentrators (SDACs) by ARINC 429 buses for flight deck indication of load shedding.
These messages are shown on the ELEC AC page according to the aircraft configuration.
Each of these three messages indicates a shed configuration:
- if part of the galley loads are shed and no other system is shed, the GALLEY PARTIALLY SHED message is displayed, in addition the message PART GALLEY is shown in amber on the ECAM STATUS page under the INOP column,
- if all galley loads are shed, the GALLEY SHED message is displayed, in addition the message GALLEY in amber is shown on the ECAM STATUS page under the INOP column,
- if all the managed loads are shed, the COMMERCIAL OFF message is displayed, in addition the message COMMERCIAL is displayed in amber on the ECAM STATUS page under the INOP column.
In case of automatic shedding failure, the FAULT legend of the GALLEY P/BSW comes on amber and ECAM caution comes on, when an overload is detected, and if the automatic shedding is not performed.

G7508471 - G3NT1T0 - FM24DB000000002

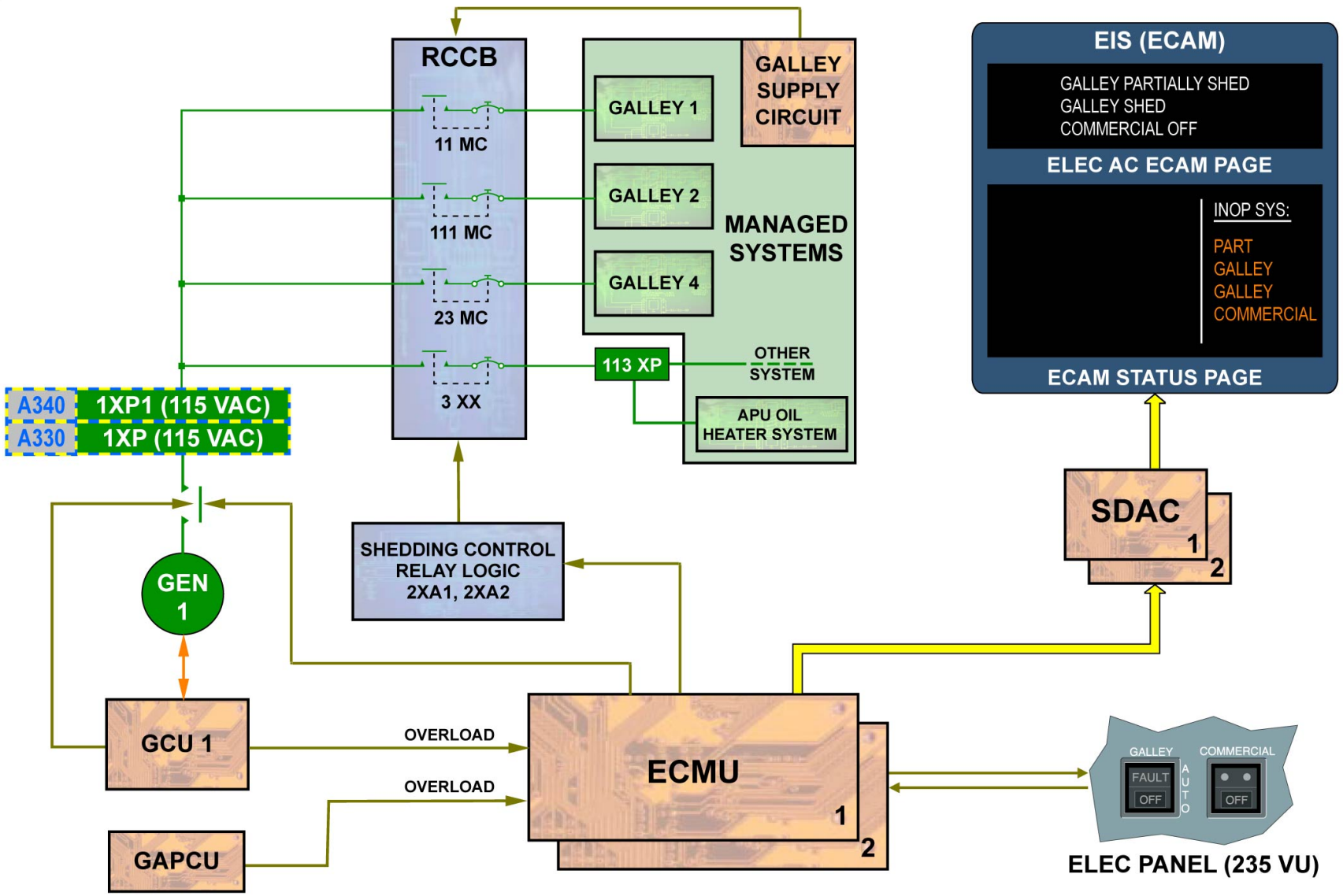

GENERAL - INDICATING

G7508471 - G3NT1T0 - FM24DB00000002

REFUEL ON BATTERY D/O (3)

GENERAL

The refueling ELECtrical network is normally supplied by the A/C network.
If the A/C network is not supplied, the BATteries can be used as a power source.
The refueling operation can be made according to 3 different configurations:
- Normal configuration,
- Ground service configuration,
- Battery only configuration.

NORMAL CONFIGURATION

In normal supply configuration, the refueling ELEC network is supplied either by the EXTernal PoWeR, the APU GENerator or the main GENerators.

GROUND SERVICE CONFIGURATION

In ground service supply configuration, the refueling ELEC network is supplied by the EXT PWR A only via the MAINTenance BUS P/BSW without energizing the whole A/C network.

BATTERY ONLY CONFIGURATION

In BATs only configuration, the ELEC network is supplied by the main BATs.

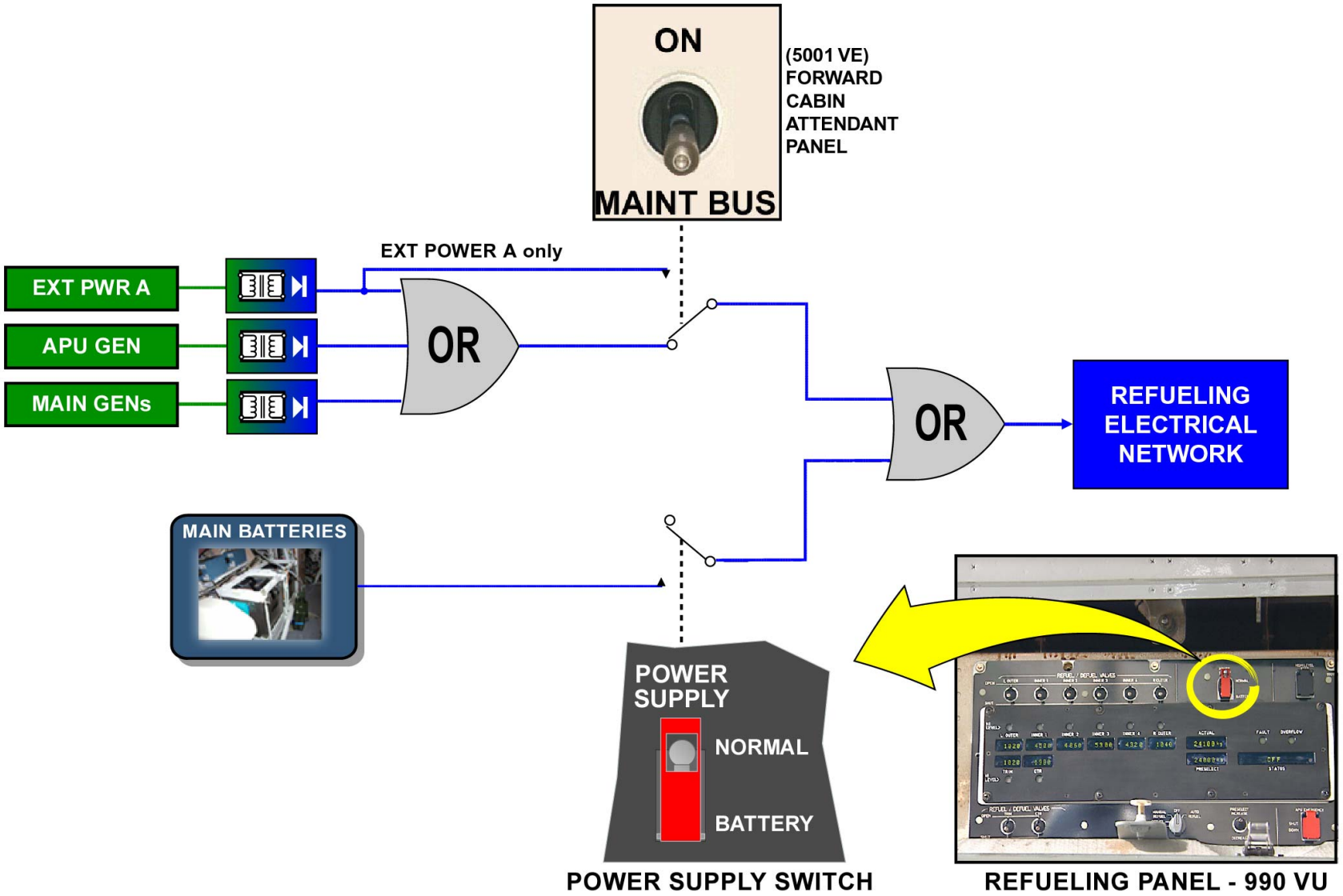

GENERAL ... BATTERY ONLY CONFIGURATION

G7508471 - G3NT1T0 - FM24DAF24AP0202

AIRBUS S.A.S.
31707 BLAGNAC cedex, FRANCE
STM
REFERENCE G7508471
NOVEMBER 2008
PRINTED IN FRANCE
AIRBUS S.A.S. 2008
ALL RIGHTS RESERVED

AN EADS COMPANY

A330-200/300
TECHNICAL TRAINING MANUAL
MAINTENANCE COURSE - T1 (LVL 2&3) (RR Trent 700)
EQUIPMENT/FURNISHINGS

This document must be used for training purposes only

Under no circumstances should this document be used as a reference

It will not be updated.

All rights reserved
No part of this manual may be reproduced in any form,
by photostat, microfilm, retrieval system, or any other means,
without the prior written permission of AIRBUS S.A.S.

AIRBUS Environmental Recommendation
Please consider your environmental responsability before printing this document.

EQUIPMENT/FURNISHINGS

EQPT Furn. Line MAINT Briefing 2

COCKPIT

Cockpit D/O (3) 30

PASSENGER COMPARTMENT

Passenger Compartment D/O (3) 38

CREW REST COMPARTMENT

Crew Rest Compartment D/O (3) 84

GALLEY COOLING

Galley Trolley Compartment Cooling System D/O (3) 114

EMERGENCY EQUIPMENT

Emergency Equipment Cockpit D/O (3) 120
Emergency Equipment Cabin D/O 126

LOWER DECK AREA

Lower Deck Decompression Safety System 146

CARGO LOADING

Cargo Loading System D/O (3) 152

MAINTENANCE PRACTICE

Equipment/Furnishings System Base Maintenance (3) 166
Linings & Furnishings Removal/Installation (3) 202

G7508471 - G3NT1T0

EQPT FURN. LINE MAINT BRIEFING

SYSTEM OVERVIEW

The equipment and furnishings chapter covers:
- the cockpit,
- the passenger compartment,
- the crew rest compartment,
- the emergency equipment,
- the cargo compartments,
- the miscellaneous compartments.

When you work on aircraft, you must obey all the safety procedures listed in the AMM.

G7508471 - G3NT1T0 - FM25B1000000001

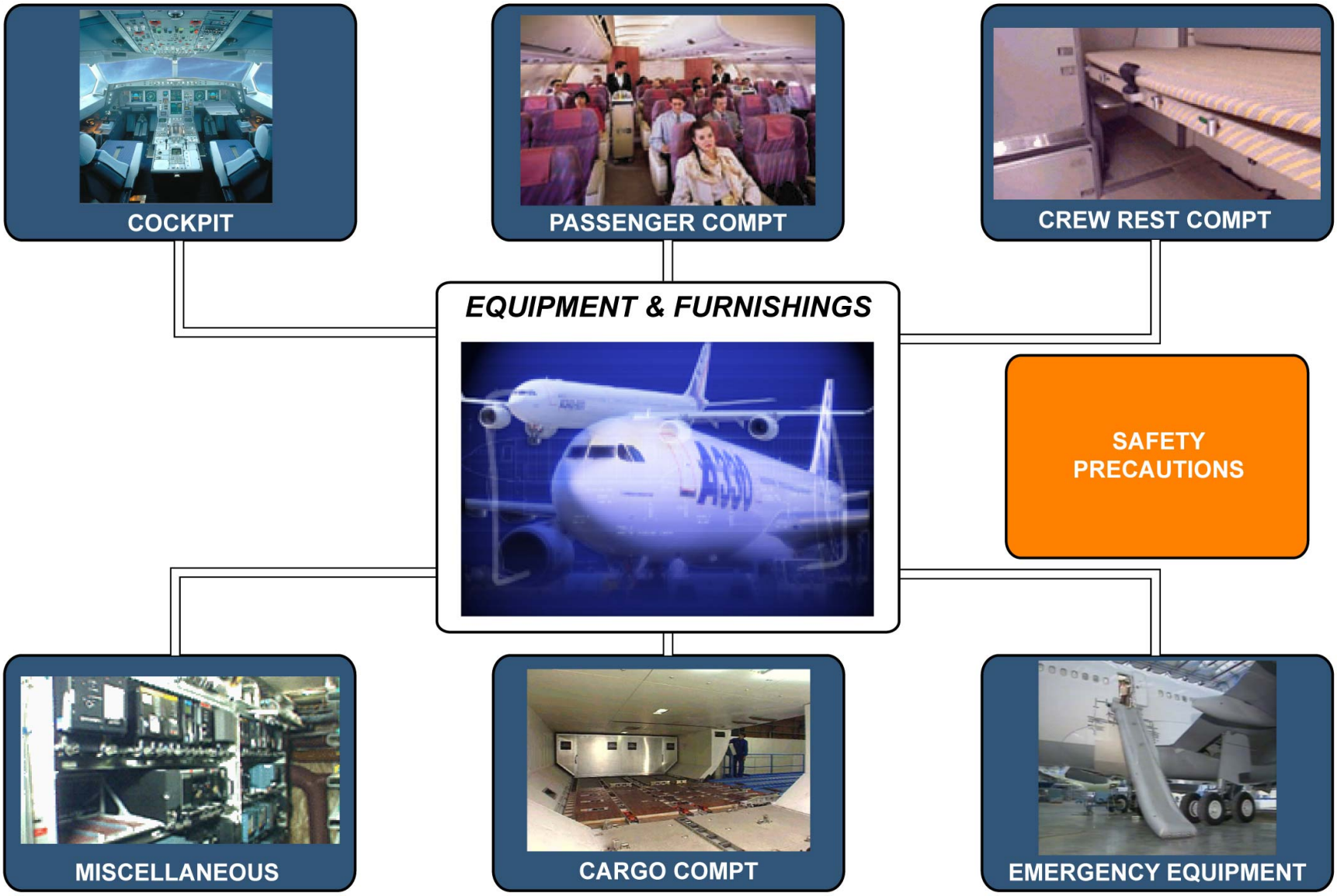

SYSTEM OVERVIEW

G7508471 - G3NT1T0 - FM25B100000001

EQPT FURN. LINE MAINT BRIEFING

SYSTEM OVERVIEW (continued)

CABIN PANEL LAYOUT

The cabin interior has removable panels. The lining design allows cabin customization. The lower side wall (DADO) panels are mounted between the cabin floor and the sidewall panels. They have rapid decompression doors. The side wall panels are mounted on the side of the cabin. They include the window contour. Inner window panels and sun visors are installed onto the window frame. The closing cover panels cover the space between the side wall panels and the cover light panels.

The cover light panels cover the space between the closing cover panels and the overhead stowage compartments. The cover light panels are removable to make cabin light replacement. Removable ceiling panels are mounted in the cabin. They are installed over the full length of the cabin and the utility areas. The cover plates are installed where there is no overhead stowage compartment installed along the top.

G7508471 - G3NT1T0 - FM25B1000000001

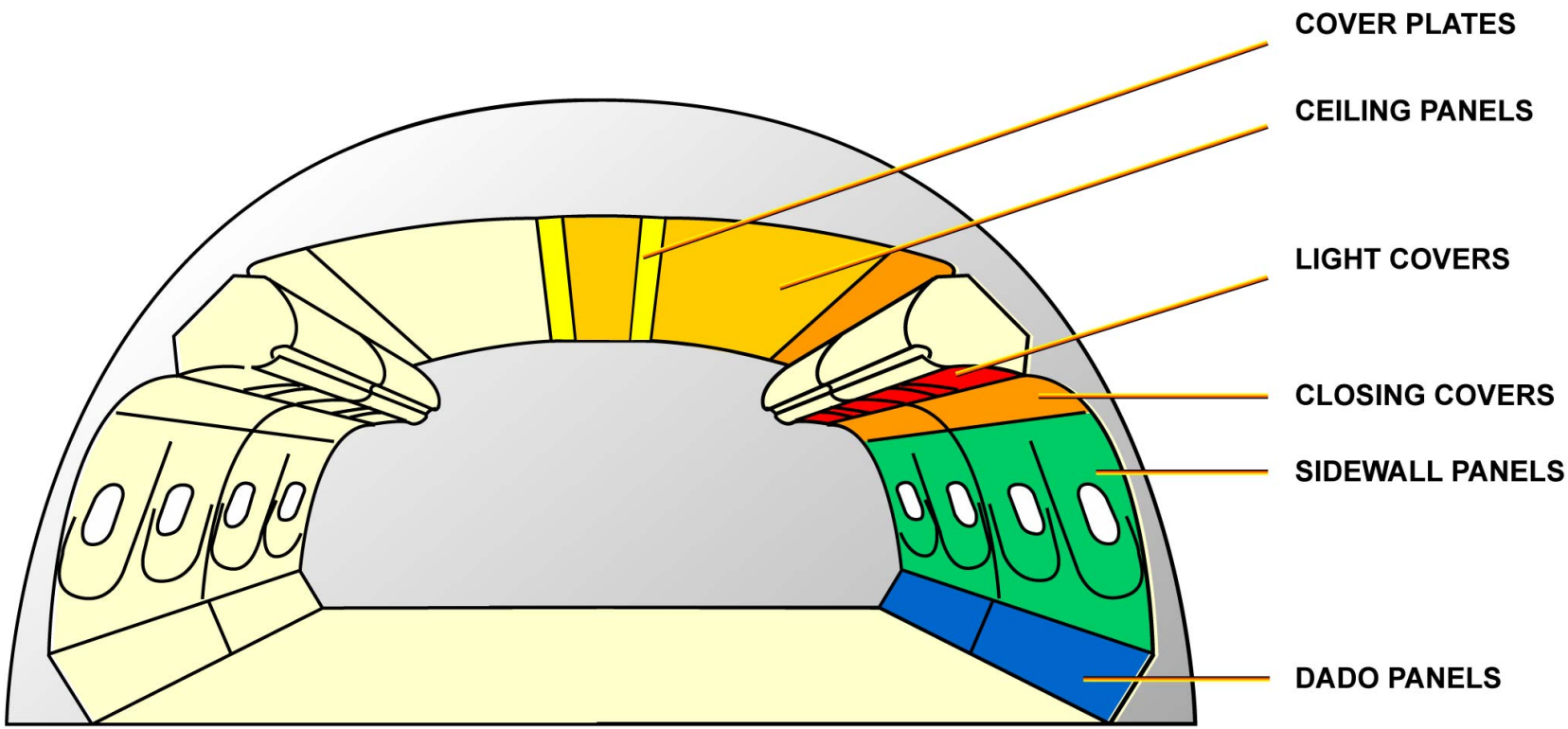

SYSTEM OVERVIEW - CABIN PANEL LAYOUT

G7508471 - G3NT1T0 - FM25B1000000001

EQPT FURN. LINE MAINT BRIEFING

SYSTEM OVERVIEW (continued)

CABIN ESCAPE FACILITIES

Slide/raft assemblies are located at all cabin exits to get quick evacuation in case of emergency. Deployment of the slide/rafts is automatic when the door is opened with the evacuation system in the ARMED mode.
If the automatic deployment system fails, the slide/raft can be manually deployed.

G7508471 - G3NT1T0 - FM25B1000000001

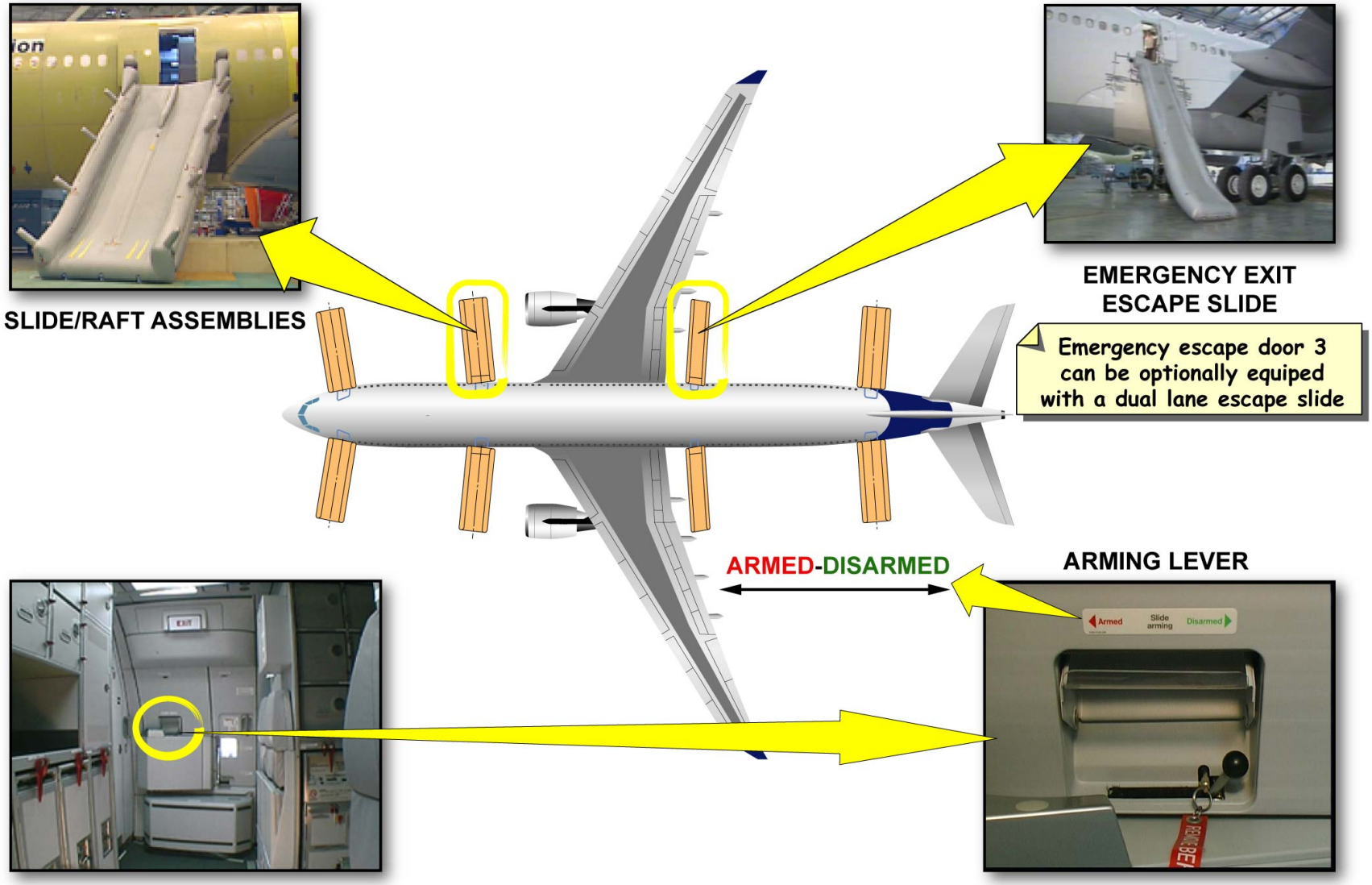

SYSTEM OVERVIEW - CABIN ESCAPE FACILITIES

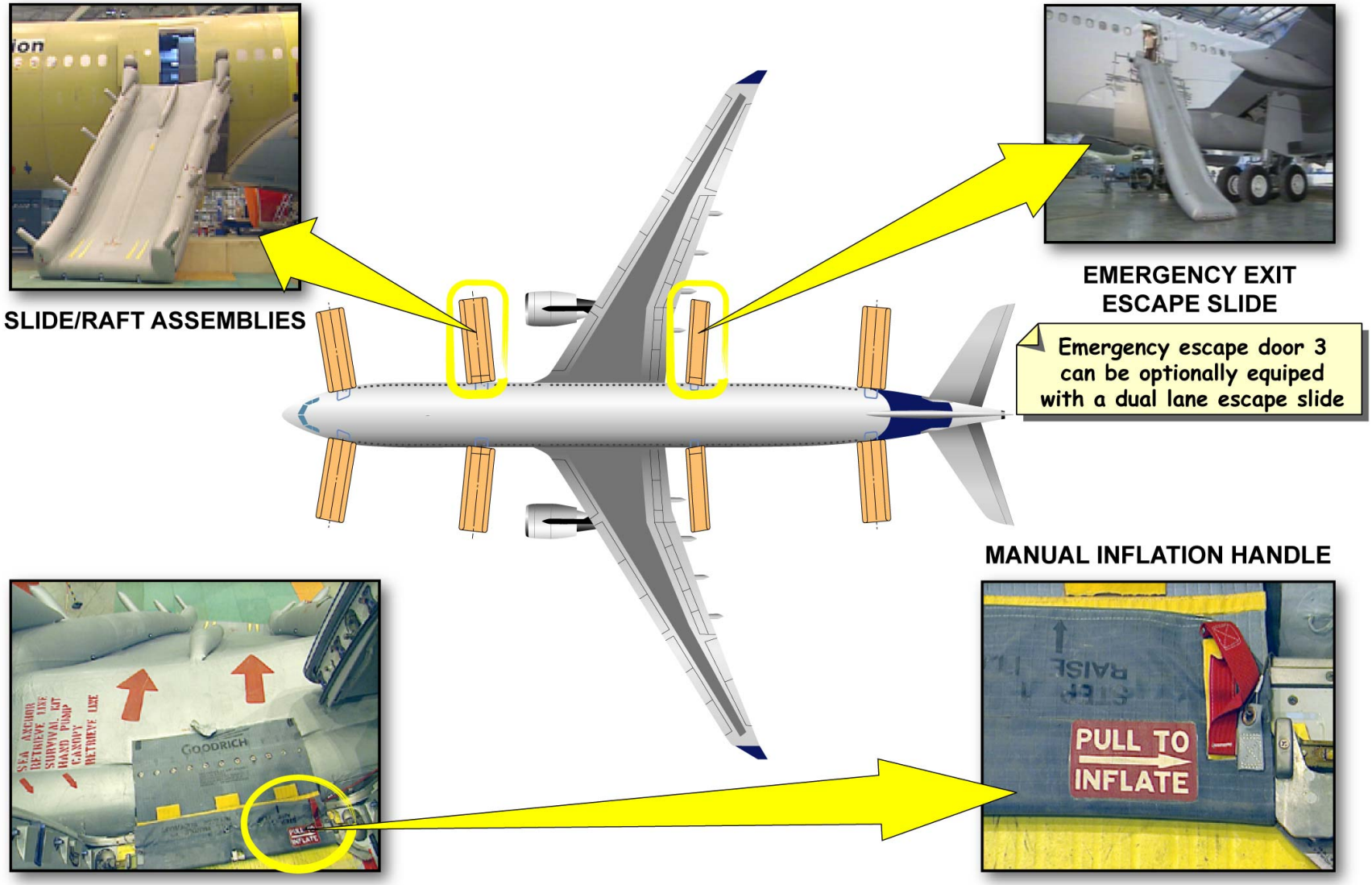

SYSTEM OVERVIEW - CABIN ESCAPE FACILITIES

This Page Intentionally Left Blank

G7508471 - G3NT1T0 - FM25B1000000001

EQPT FURN. LINE MAINT BRIEFING

SYSTEM OVERVIEW (continued)

LOWER DECK CARGO COMPARTMENTS

The aircraft has three lower deck cargo compartments in the lower part of the fuselage. They are:
- the forward cargo compartment,
- the aft cargo compartment,
- the bulk cargo compartment.

The forward and aft cargo compartments have an independently operated semi-automatic Cargo Loading System (CLS) and can accommodate cargo in containers or on pallets. The bulk cargo compartment is designed for transportation of bulk cargo, passenger luggage and alive animals. Access to the forward, aft and bulk cargo compartments is gained through doors located on the right hand side of the fuselage. Two hydraulically operated outwards opening doors give access to the forward and aft cargo compartments. The bulk cargo has one manually operated door, which opens inwards.

The inside of the cargo compartments is composed of:
- floor panels,
- ceiling panels,
- side linings,
- partition walls.

All the linings and panels are sealed to give a fully sealed compartment. Rapid decompression panels, blow in, blow out panels are installed in the linings to prevent damage from differential pressure during climb and descent. In case of decompression in the cabin or in the cargo compartment, they equalize the pressure in both sections, to avoid damage to the structure.

G7508471 - G3NT1T0 - FM25B1000000001

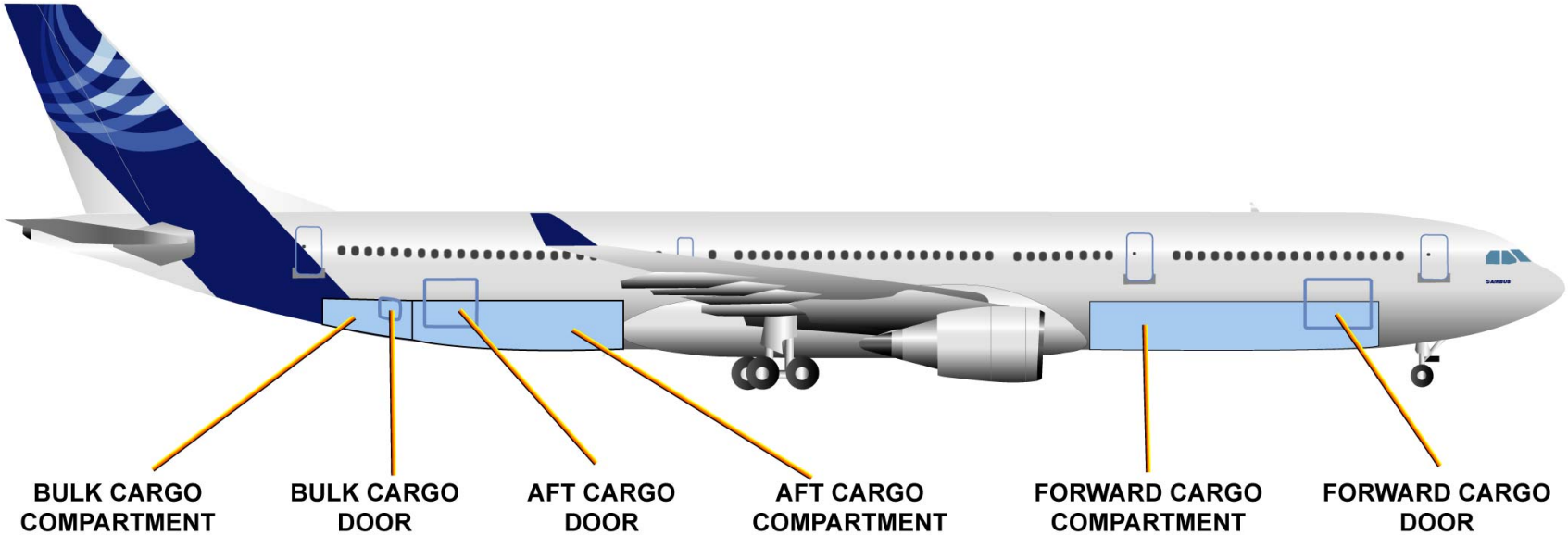

SYSTEM OVERVIEW - LOWER DECK CARGO COMPARTMENTS

G7508471 - G3NT1T0 - FM25B1000000001

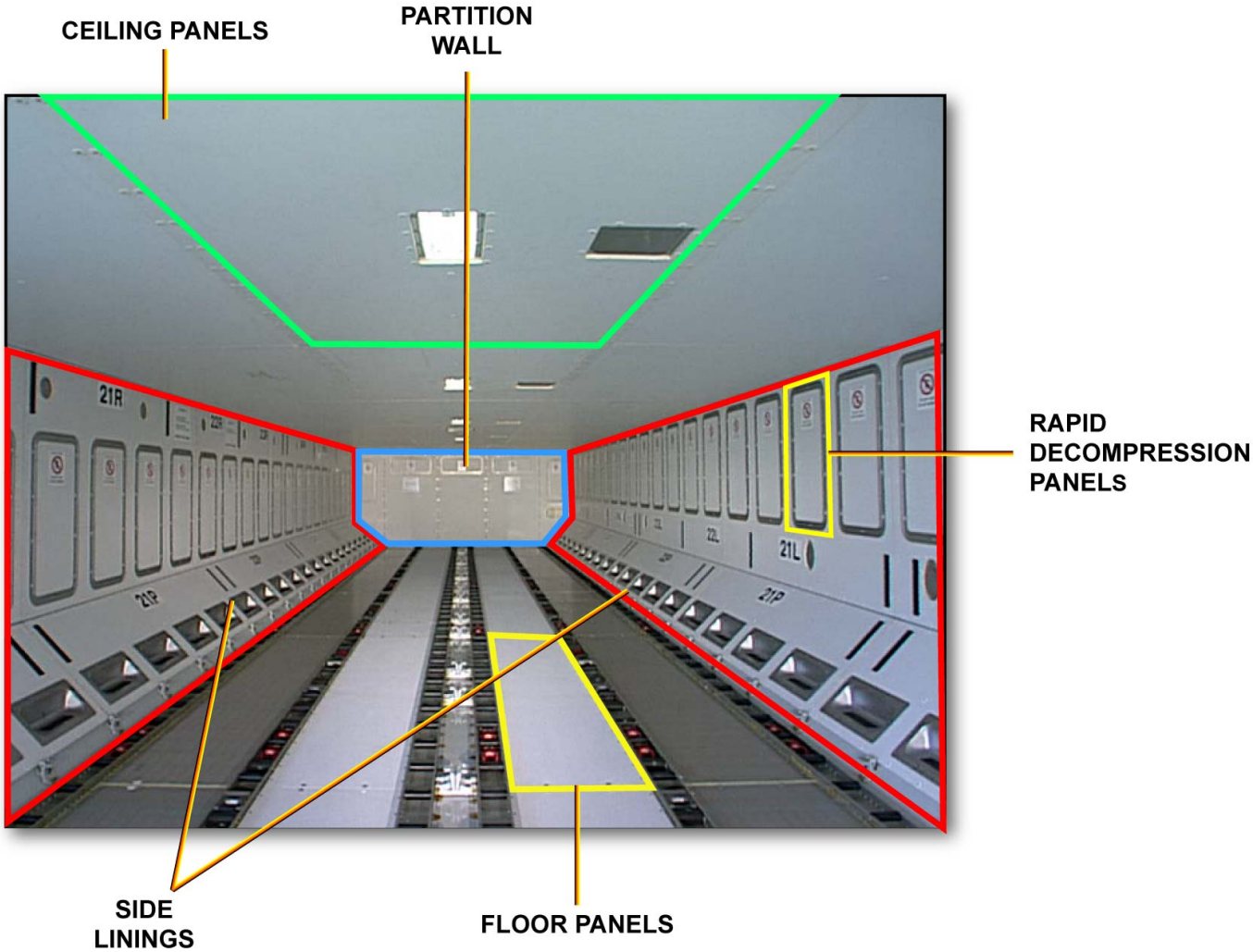

SYSTEM OVERVIEW - LOWER DECK CARGO COMPARTMENTS

G7508471 - G3NT1T0 - FM25B1000000001

This Page Intentionally Left Blank

G7508471 - G3NT1T0 - FM25B1000000001

EQPT FURN. LINE MAINT BRIEFING

SYSTEM OVERVIEW (continued)

LOWER DECK CARGO LOADING SYSTEM (CLS)

The semi-automatic CLS of the forward and aft cargo compartments is used to load, unload and move the Unit Load Devices (ULDs). These ULDs can be pallets or containers of different sizes. One person can operate the CLS. If there is no electrical power available, it is possible to load or unload manually. The semi-automatic cargo loading systems of the forward and the aft lower deck cargo compartments are similar in construction and work independently.

The CLS includes:

- control panel installed adjacent to the cargo compartment door,
- control box,
- Power Drive Units (PDUs)
- proximity switches located on the different latches.

For the powered loading operation, the power switch must be in the ON position. The AC/DC power is available and the manual doorsill latch must be in the lowered position. The control panel sends electrical signals through the control box to the applicable PDUs. The PDUs move the ULDs in the necessary direction and to their loading positions. When a ULD is in the correct loading position, you must manually lock the latch.

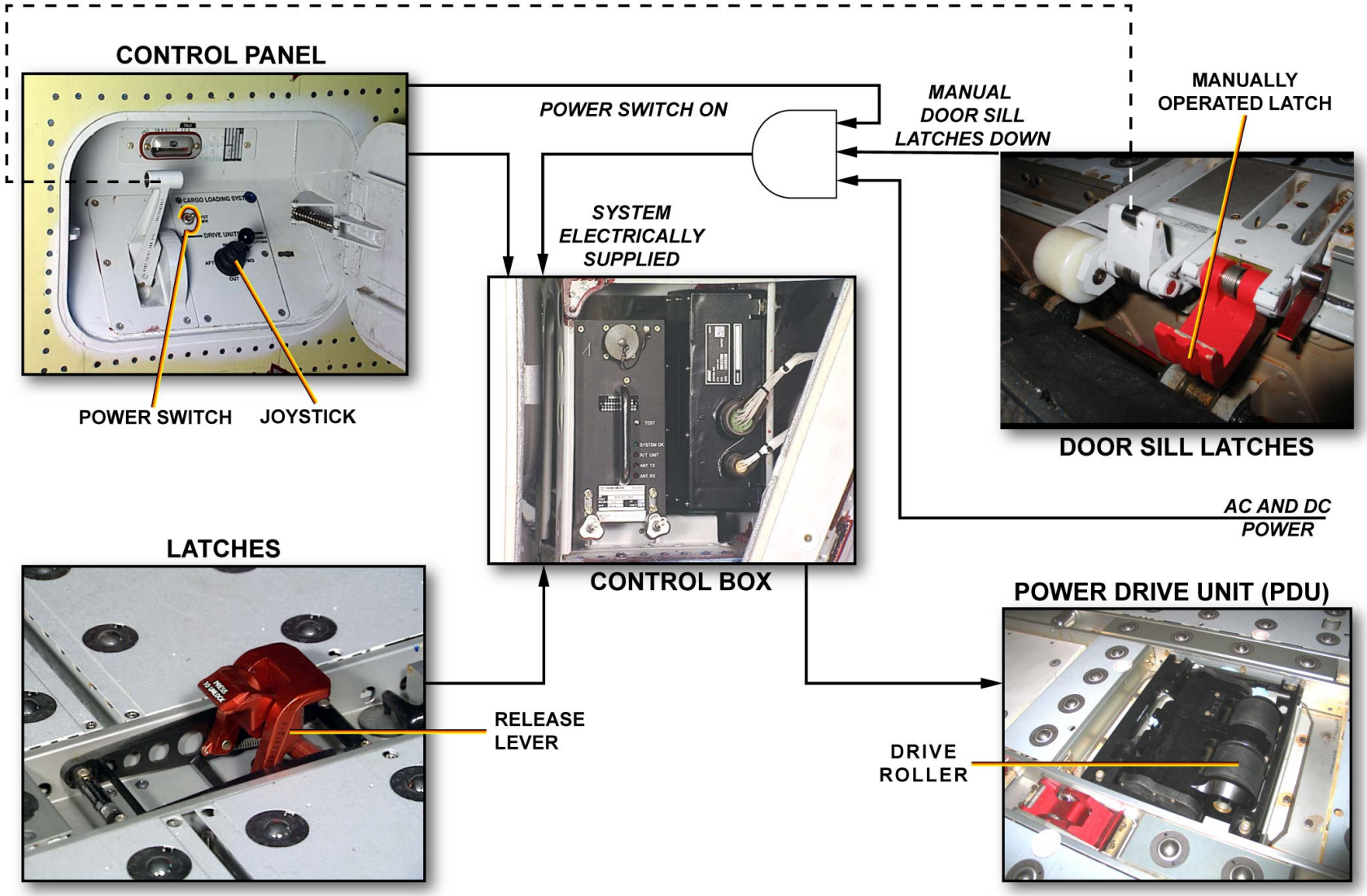

SYSTEM OVERVIEW - LOWER DECK CARGO LOADING SYSTEM (CLS)

G7508471 - G3NT1T0 - FM25B1000000001

EQPT FURN. LINE MAINT BRIEFING

MEL/DEACTIVATION

One or more escape slide/slide raft cabin passenger exit door may be inoperative if the related door is inoperative (cannot be used in case of emergency evacuation). One or more slide bottle pressure indication on the Forward/Flight Attendant Panel (FAP) may be inoperative if the related slide bottle pressure is checked before the first flight of each day.

NOTE: The number of inoperative doors on the aircraft changes according to the local regulations (limit the number of passengers).

One or more blow in/out panels in cargo compartments may be damaged or missing if related cargo compartment is empty or does not contain inflammable or combustible materials. One or more lining panels in cargo compartments may be damaged if related cargo compartment is empty or does not contain inflammable or combustible materials. One or more lining panels in cargo compartments may be missing if related cargo compartment is empty.

In case of malfunction or failure of the lower deck CLS, refer to the ramp dispatcher which will decide if loading restrictions must be applied in accordance with the Weight and Balance Manual (WBM).

NOTE: : SOME AIRLINES PUT THE WBM LIMITS AND RESTRICTIONS IN THE MEL CHAPTER 25

CAUTION: In the case of malfunction of any part of the cargo loading system, restrictions may be imposed on pallet/container gross weights or their position in the cargo hold.

G7508471 - G3NT1T0 - FM25B100000001

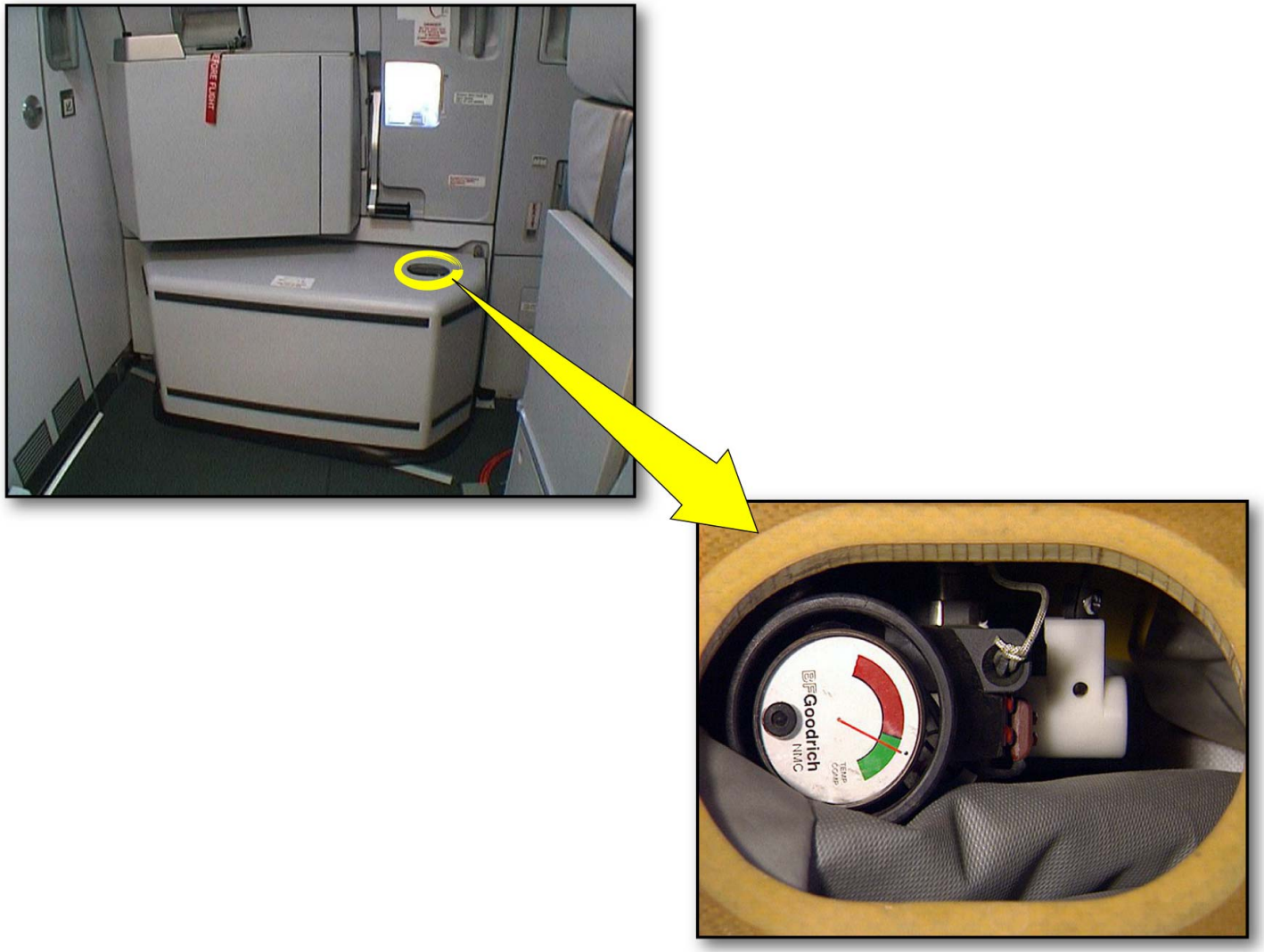

MEL/DEACTIVATION

MEL/DEACTIVATION

G7508471 - G3NT1T0 - FM25B1000000001

AIRBUS
A330-A340
WEIGHT AND BALANCE MANUAL

Cargo equipment malfunction limitations

CAUTION 1 : MAXIMUM LOADS FOR ULD POSITIONS REQUIRE THAT ALL LATCHES ARE INSTALLED AND USED AS INTENDED.

CAUTION 2 : WEIGHT REDUCED TO "0" IN THE FOLLOWING TABLES MEANS : THE CONCERNED ULD POSITION(S) MUST BE UNOCCUPIED. LOADING OF AN EMPTY ULD IS ALLOWED PROVIDED THERE ARE ENOUGH INTACT LATCHES REMAINING TO AVOID UNCONTROLLED MOVEMENT OF AN EMPTY ULD.

This paragraph covers malfunctions of cargo equipment which secures ULD's to the floor structure of the cargo compartment to prevent their movement during flight.

Malfunction of equipment whitch serves only for guidance, handling, etc. of ULD' are not covered.

A malfunction of such equipment is defined as damaged/inoperative or failed/missing equipment.

In case of malfunctioning equipment onloading/offloading should be carried out carefully to prevent damage to operative equipment, ULD's and/or aircraft structure. Malfunctioning equipment should be replaced as soon as possible.

Failure of a latch may require weight reduction of the ULD's fwd and aft of the latch or LH and RH of the latch (if applicable).

The following tables gives the identification of latch types and the ULD load restrictions to be applied in case of missing or inoperative equipment.

(01) Key of latch types

- YZ-LATCH (RETRACTABLE)
- YZ-LATCH (FIXED)
- YZ-LATCH TWO SIDE LOADED (RETRACTABLE)
- XZ-LATCH TWO SIDE LOADED (RETRACTABLE)
- XZ-DOUBLE LATCH (RETRACTABLE)
- XZ-TRIPLE LATCH (RETRACTABLE)
- XZ-LATCH (FIXED)
- FIXED GUIDE
- TIE DOWN POINT
- OVERRIDEABLE COMPONENT

MEL/DEACTIVATION

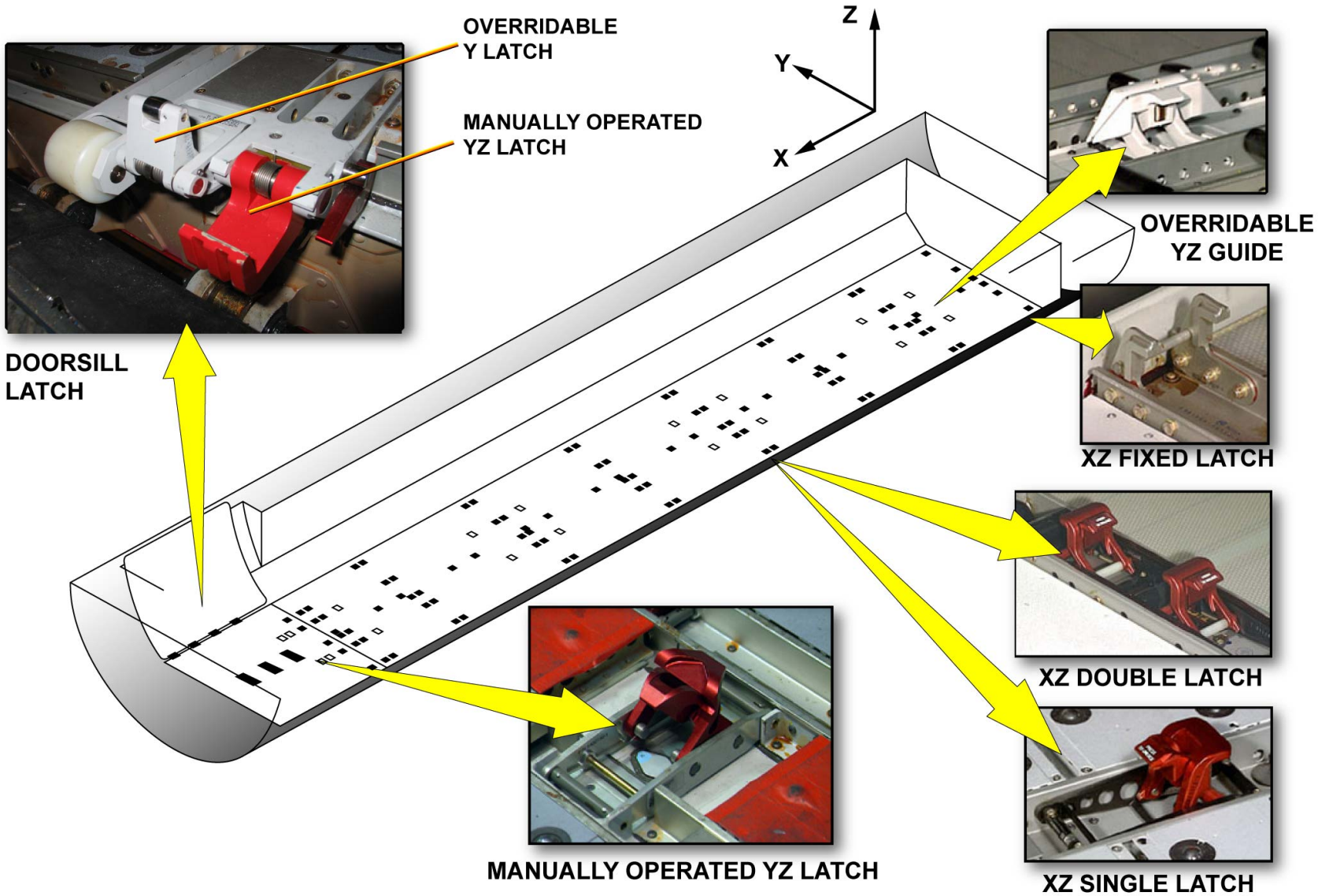

MEL/DEACTIVATION

This Page Intentionally Left Blank

G7508471 - G3NT1T0 - FM25B1000000001

EQPT FURN. LINE MAINT BRIEFING

MAINTENANCE TIPS

SAFETY THE DOOR CYLINDER PERCUSSION MECHANISM

A Type A door has been chosen as an example. Make sure that the emergency control handle is locked in the disarmed position and secured with the safety pin.
If maintenance has to be done at or near the door, the striker lever must be set to the maintenance position, to prevent operation of the door emergency cylinder. The door is now in maintenance configuration.

G7508471 - G3NT1T0 - FM25B1000000001

SET THE SLIDE RELEASE MECHANISM TO DISARMED AND SECURE WITH SAFETY PIN

PASSENGER/CREW DOOR

HANDLE IN DISARMED POSITION

MAINTENANCE TIPS - SAFETY THE DOOR CYLINDER PERCUSSION MECHANISM

SAFETY THE PERCUSSION MECHANISM OF THE DOOR DAMPER AND EMERGENCY OPERATION CYLINDER:

- Open the related passenger/crew door,
- Install the safety pin,
- Remove and discard the lockwire from the knurled screw,
- Pull back the striker lever to disarm it,
- Tighten the knurled screw.

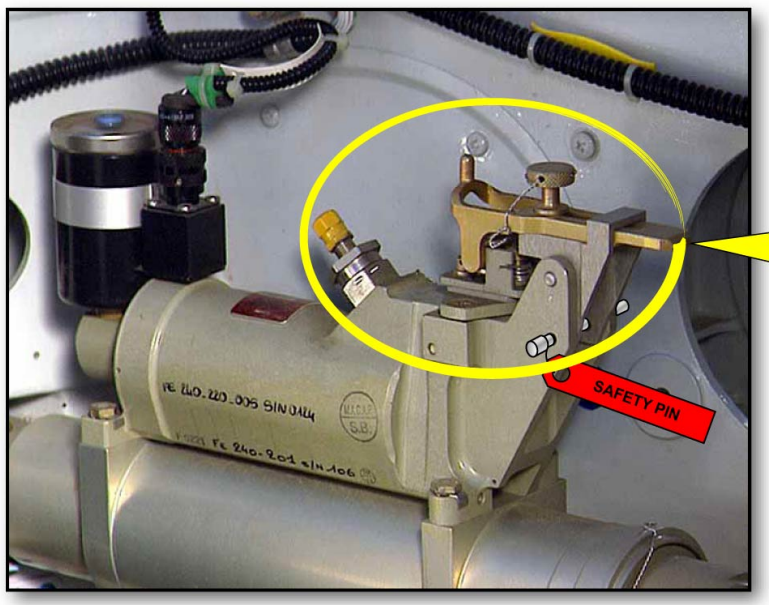

PASSENGER/CREW DOOR

STRIKER LEVER IN DISARMED POSITION
(MAINTENANCE)

MAINTENANCE TIPS - SAFETY THE DOOR CYLINDER PERCUSSION MECHANISM

This Page Intentionally Left Blank

G7508471 - G3NT1T0 - FM25B1000000001

EQPT FURN. LINE MAINT BRIEFING

MAINTENANCE TIPS (continued)

DISARM THE DOOR ESCAPE SLIDE RESERVOIR

The passenger/crew door escape slide reservoir is located behind a cover. To fulfill the maintenance tasks on the door, the attached slide/raft activating system must be disarmed. The door arming mechanism must be set to the disarmed position and secured with the safety pin. After removing the cover, secure the inflation reservoir using the safety pin from the stowage pocket located inside the cover. The pin-fitting procedure is slightly different for Type A and Type 1 doors. The door escape slide is now in maintenance configuration.

G7508471 - G3NT1T0 - FM25B1000000001

RESERVOIR PIN INSTALLATION PROCEDURE:

- **WARNING: You must not remove the firing lever when you install the transport safety pin. If you do so, you will start the inflation sequence,**
- **Carefully put the pin in the opening and turn it as you push it in the trigger assembly,**
- **Push the pin until the sleeve is against the trigger assembly.**

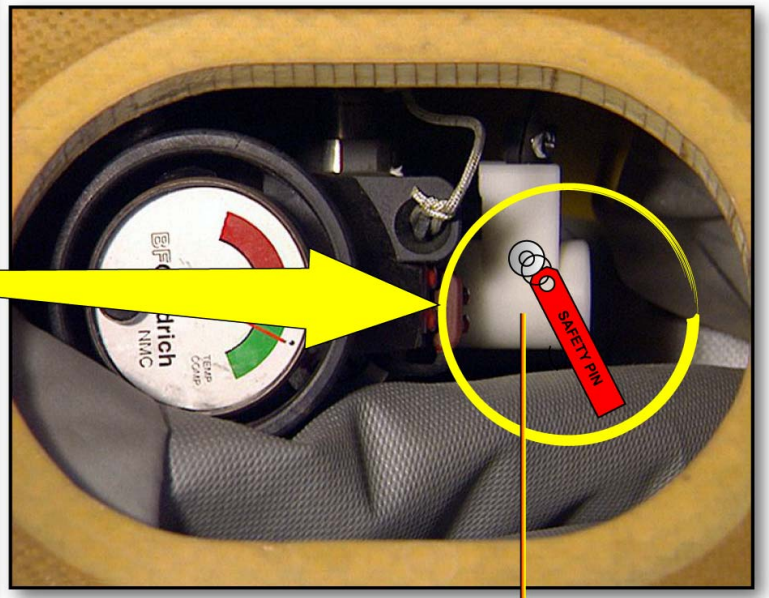

VALVE REGULATOR ASSEMBLY

TRIGGER ASSEMBLY

MAINTENANCE TIPS - DISARM THE DOOR ESCAPE SLIDE RESERVOIR

G7508471 - G3NT1T0 - FM25B1000000001

EQPT FURN. LINE MAINT BRIEFING

'A' CHECK ITEMS

VISUAL INSPECTION TO CHECK THE INTEGRITY OF THE CARGO COMPARTMENT

Moreover, in relation with the Maintenance Planning Document (MPD), the visual inspection of cargo compartment decompression and lining panels must be done every 600 Flight Hours (FH).
Look carefully at each decompression panel for cracks and other damage.

NOTE: If a decompression panel is damaged, do a repair or replace the panel.

Make sure that each decompression panel has a seal installed: missing seals are not permitted, and make sure that seals are in the correct condition. Make sure that each decompression panel is in the correct position.
Look carefully at each lining panel for cracks and other damage, as well as their correct attaching.

NOTE: If a lining panel is damaged, do a repair or replace the panel.

G7508471 - G3NT1T0 - FM25B1000000001

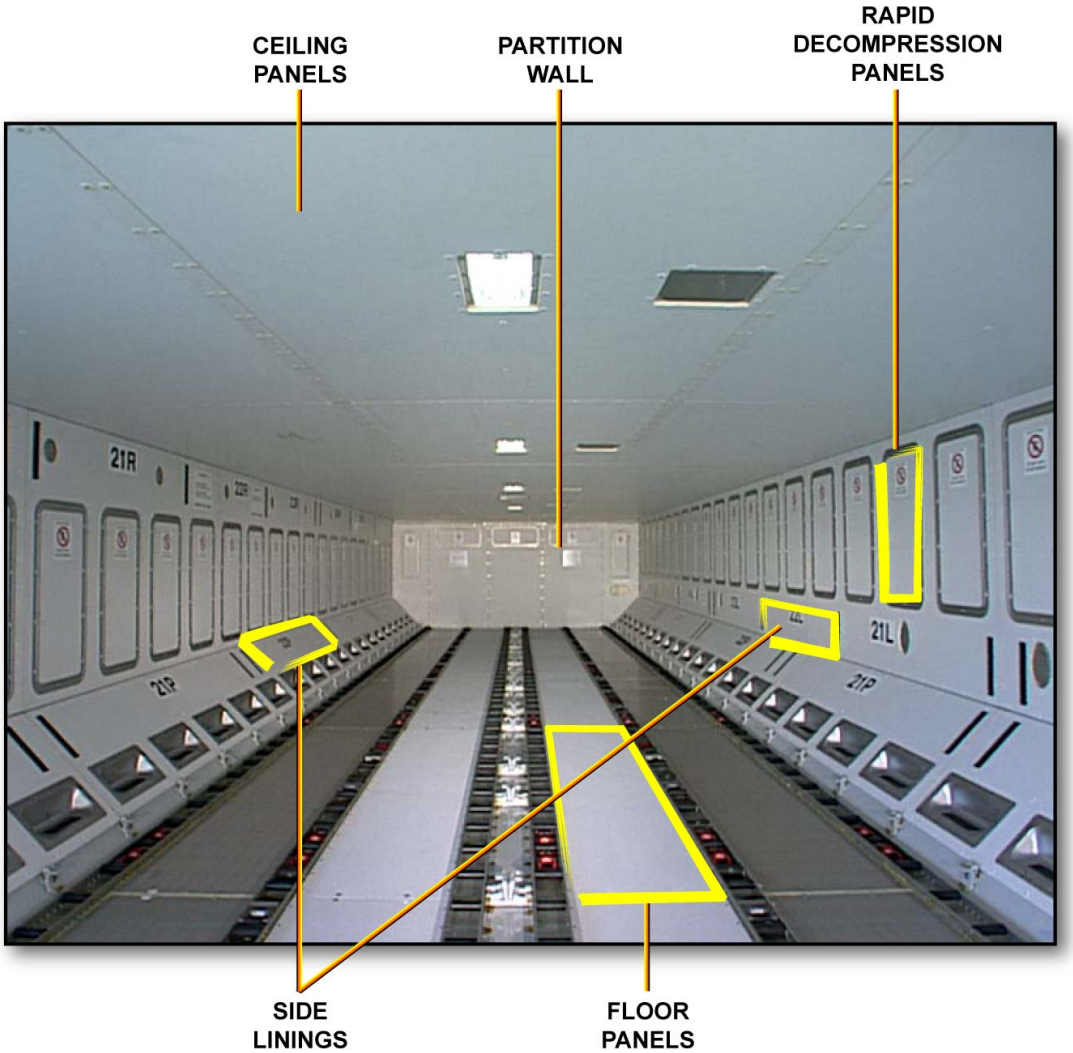

'A' CHECK ITEMS - VISUAL INSPECTION TO CHECK THE INTEGRITY OF THE CARGO COMPARTMENT

G7508471 - G3NT1T0 - FM25B1000000001

COCKPIT D/O (3)

PILOT SEATS

The description, operation and attachment are the same for the captain and the first officer seat as they are symmetrical. However, they are not interchangeable because of the armrests and the controls.

DESCRIPTION

Each pilot seat consists of:
- a backrest,
- two armrests,
- a seating assy,
- a telescopic column,
- a shoulder harness with a control lever,
- a life vest compartment.

The safety harness is a five-strap model equipped with a buckle. The straps can be clicked into the buckle in any order. To release the straps, the buckle has to be turned a quarter turn. Pushing on top releases the shoulder harness alone. The shoulder harness is fitted on an inertial reel, which can be locked by a control lever, located behind the backrest.

The backrest is designed to offer maximum comfort to the occupant and to provide good lateral support of the body. The backrest is divided into two parts:
- the backrest,
- the lumbar rest.

The two parts are integral.

The inboard armrest is located on the pedestal side. The armrest is hinged to the backrest and can be raised vertically and stowed behind the backrest.

A sidestick armrest is located on the console side and contains the fixed arm, the carrier arm and the table. It is attached to the seatpan and is independent from the backrest movements. It can be folded back to a vertical position. A free wheel serves to avoid interference between the armrest and the lateral console.

The seating assy consists of a seatpan and a cushion. The seatpan is a metallic structure, attached to the moving part of the telescopic column. Footrests are provided on the aft part of the seatpan. The cushion provides good support and ensures good pressure distribution.

A life vest is stowed on the aft side of the backrest in a compartment accessible through a hinged door and held closed by means of two magnets.

The telescopic column is made up of three sections:
- the seatbase, connecting the seat to the cockpit floor,
- the moving section, supporting the seatpan,
- the free section which slides into the moving section and the base.

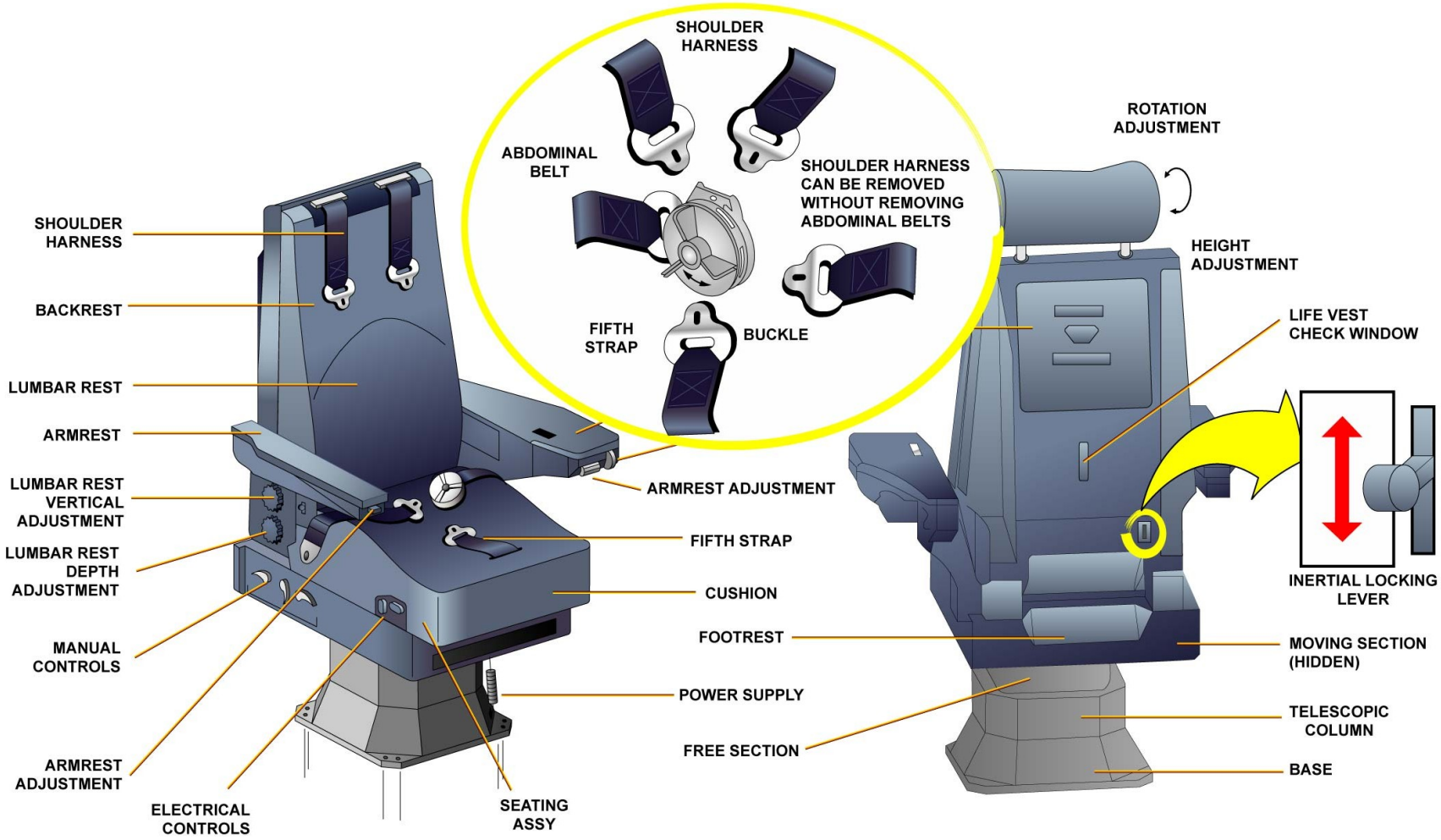

PILOT SEATS - DESCRIPTION

COCKPIT D/O (3)

PILOT SEATS (continued)

OPERATION

Pilot seats have electrical controls for horizontal and vertical travel. Mechanical controls may be used to override the electrical controls in case of electrical component failure. Other mechanical controls are used for further adjustment of the seat.
Electrical control is provided by a gear motor. With vertical travel, the free section is pulled off or pushed into the seat base. Horizontal travel is determined by a roller fitted under the seatpan, which slides into the L-shaped track.
The control levers "V", "H" and "R" are used for mechanical vertical, horizontal or backrest movements respectively. When a lever is pushed, the system is unlocked. As soon as the lever is released, the system is locked. A gas cylinder is used to slow down vertical and backrest movements.
Rotation of the knobs ensures depth adjustment and vertical movement of the lumbar rest.
The button located on the armrest ensures angular adjustment by means of a screw-nut system and associated stop. Continuous adjustment is possible in a range of 15 degrees downwards and 10 degrees upwards.
A sidestick armrest is located on the console side. The table tilt and the carrier arm height can be adjusted.

ATTACHMENT

The pilot seats are attached to the cockpit floor by means of eight hex head screws.
The steps of the procedure are explained as follows:
- energize the ground service network,
- get access to the avionics compartment through door 811 and then open, safety and tag, the corresponding circuit breakers,
- remove the sidestick armrest from the seat to get it into the cockpit,
- put the seat into position and install the washers and screws and tighten them. Paint the bolts with structure paint,
- reinstall the armrest,
- in the avionics compartment, remove the blanking caps from the connectors and connect the electrical connectors,
- clean the working area and de-energize the ground service network.

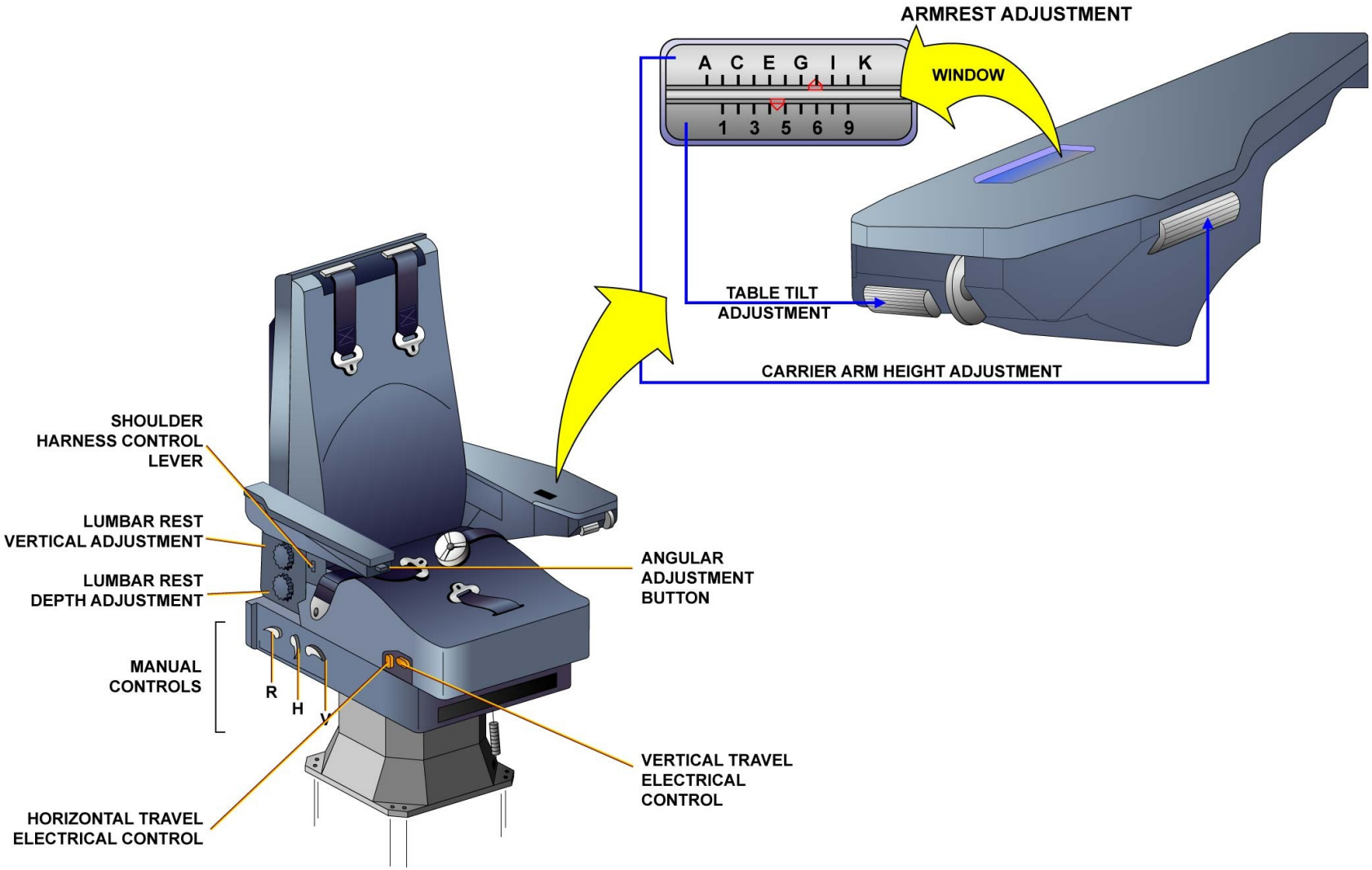

PILOT SEATS - OPERATION & ATTACHMENT

G7508471 - G3NT1T0 - FM25D1F25AE0102

COCKPIT D/O (3)

THIRD OCCUPANT SEAT

The basic structure and shape of the third occupant seat is identical to the pilot seats. Thus the description remains valid.
The differences between the third occupant seat and the pilot seat are as follows:
- the third occupant seat has only mechanical controls so no circuit breakers and no electrical connector to deal with during removal and installation,
- it is raised by 100 mm (3.94 inches) on the rotating star for good visibility.

When aligned with the centerline and in extreme forward position, the seat rotates counter-clockwise to one of three positions: 30, 45 or 68 degrees. The lateral travel is 101.6 mm (4 inches) instead of 76.2 mm (3 inches) for the pilot seat.
Both armrests are of the pilot inboard armrest type. The life vest is stowed in a box located on the aft partition of the cockpit.

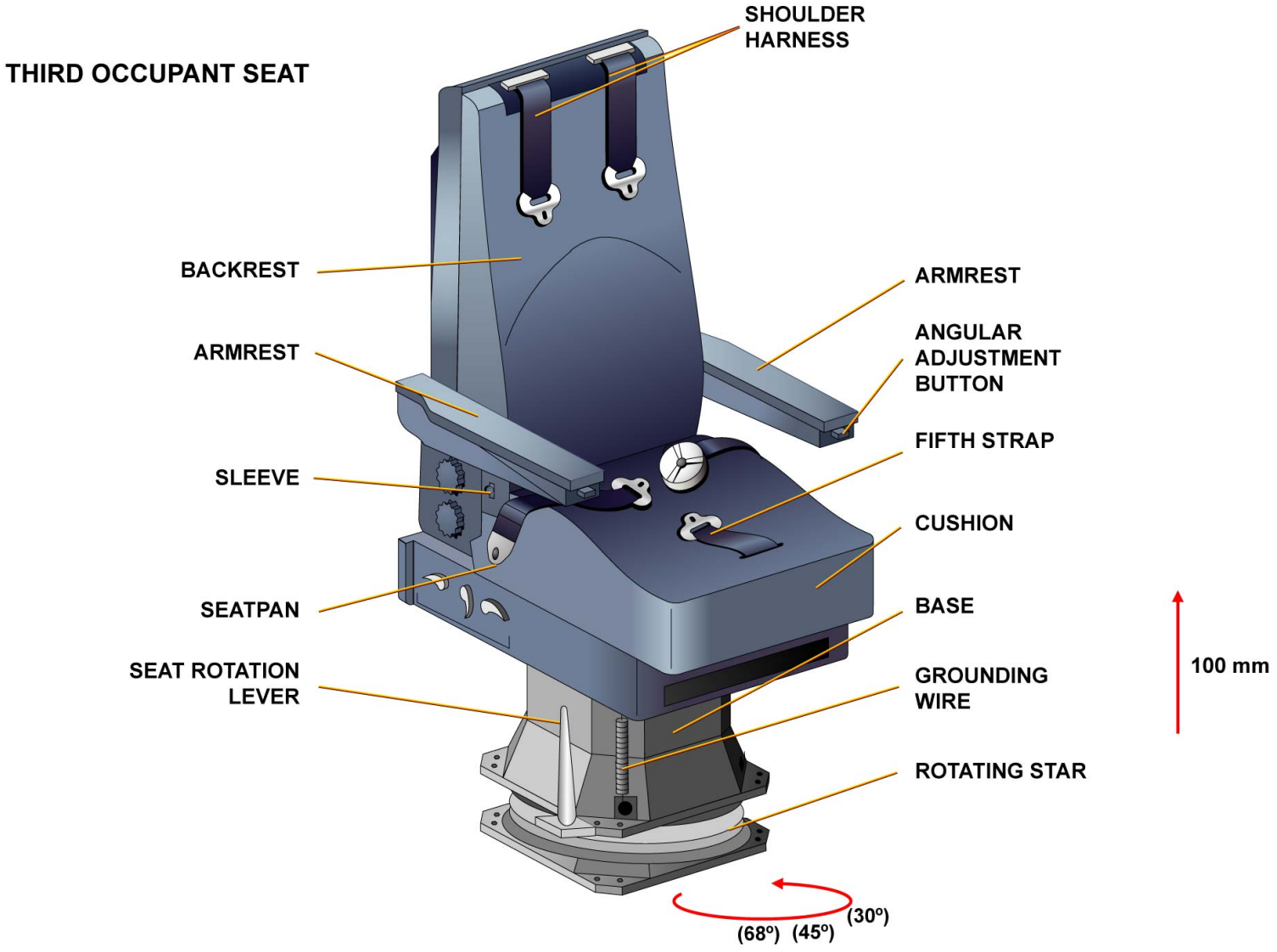

THIRD OCCUPANT SEAT

G7508471 - G3NT1T0 - FM25D1F25AE0102

COCKPIT D/O (3)

FOURTH OCCUPANT SEAT

Now, we shall see different aspects of the fourth occupant seat which is a folding seat.

DESCRIPTION

The fourth occupant seat consists of:
- a headrest,
- a backrest,
- a seating panel,
- a shoulder harness with a control lever,
- a life vest stowage.

The shoulder harness control lever is located on the right hand side of the seat. It is possible to immobilize the occupant if he/she is taken ill (or for other reasons). This is therefore an emergency procedure.
The seating panel rotates down in use. It automatically returns to the stowed position aligned with the backrest when not in use.
A stowage compartment is located below the seating panel. It is closed by means of a lock and contains a life vest.
The headrest is integral with the backrest.
The safety harness is a five-strap model equipped with a buckle. The abdominal belt has NO sleeve to enable stowage.

OPERATION

The fourth occupant seat is NOT adjustable.

ATTACHMENT

The fourth occupant seat is attached to the floor by means of four hex head screws. It forms an angle of 28 degrees with respect to the aft partition. It is inclined backwards by 4.42 degrees.
The steps of the procedure are explained as follows:
- the ground service network has to be energized,
- put the seat in position, install the washers and screws (in the life vest compartment) and tighten them,
- put the life vest in its compartment and close the door,
- make sure that the work area is clean and de-energize the ground service network.

FOURTH OCCUPANT SEAT

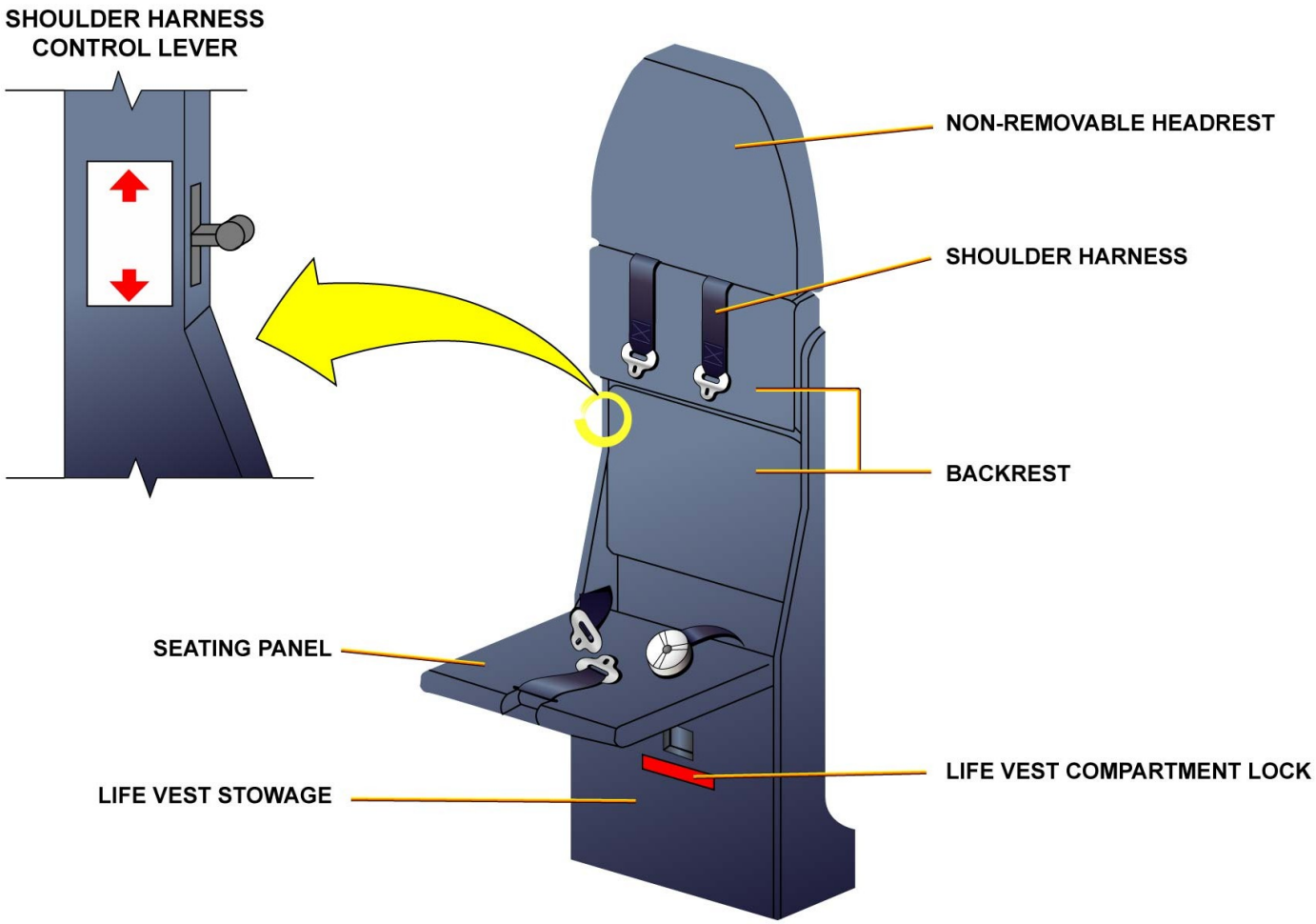

FOURTH OCCUPANT SEAT - DESCRIPTION ... ATTACHMENT

PASSENGER COMPARTMENT D/O (3)

GENERAL

The passenger compartment can be laid out according to the airline request. The cabin configuration determines the amount and the position of various items like:
- seats,
- lavatories,
- galleys,
- curtains and partitions.

The other linings and furnishings do not depend on the configuration chosen by the airline.

G7508471 - G3NT1T0 - FM25D200000002

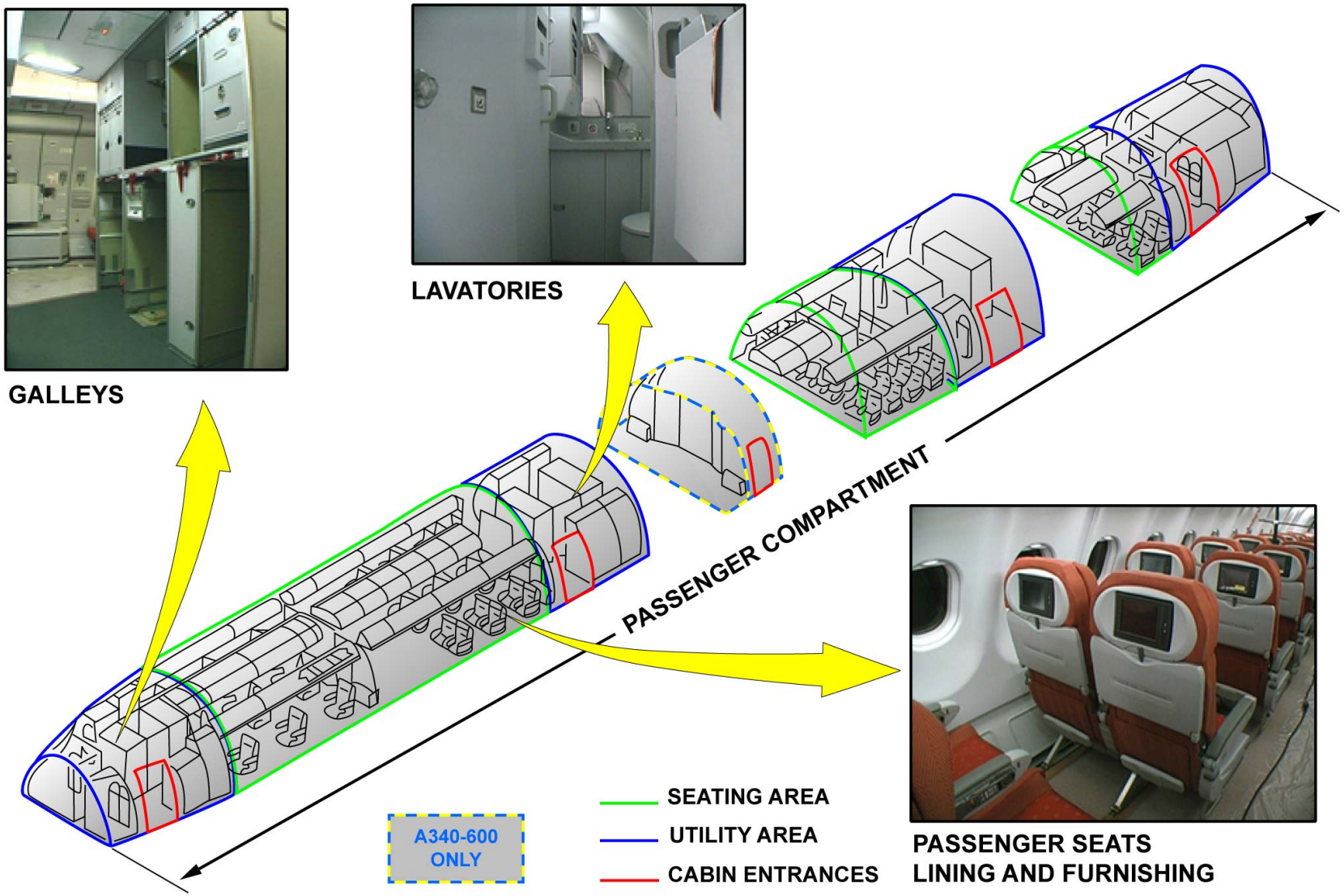

GENERAL

G7508471 - G3NT1T0 - FM25D200000002

PASSENGER COMPARTMENT D/O (3)

LINING AND FURNISHING PANELS

The cabin linings follow the inner contour of the fuselage. They are installed to cover up the fuselage structure, thermal and acoustical insulation and components of the electrical and air conditioning systems. Different panels make up the cabin linings:
- the ceiling panels in the cabin are installed over the full length of the cabin and the utility areas. The ceiling is made up of different panels; the closing covers installed along the lateral overhead stowage compartments top, ceiling panels and cover plates if there is no overhead stowage compartment installed along the top,
- the ceiling panels in the forward and aft utility areas are flat panels. Each exit-ceiling panel is made of a base and a decor panel,
- the sidewall panels are installed along the sidewalls. The panels are moulded plastic window frames,
- the dado panels are installed along the lower sidewalls. All dado panels, except those installed above the cargo compartment doors, have a rapid decompression safety system,
- the door linings are installed on each passenger/crew door and emergency exit door,
- the lateral light covers are installed below the RH and LH overhead stowage compartments.

G7508471 - G3NT1T0 - FM25D200000002

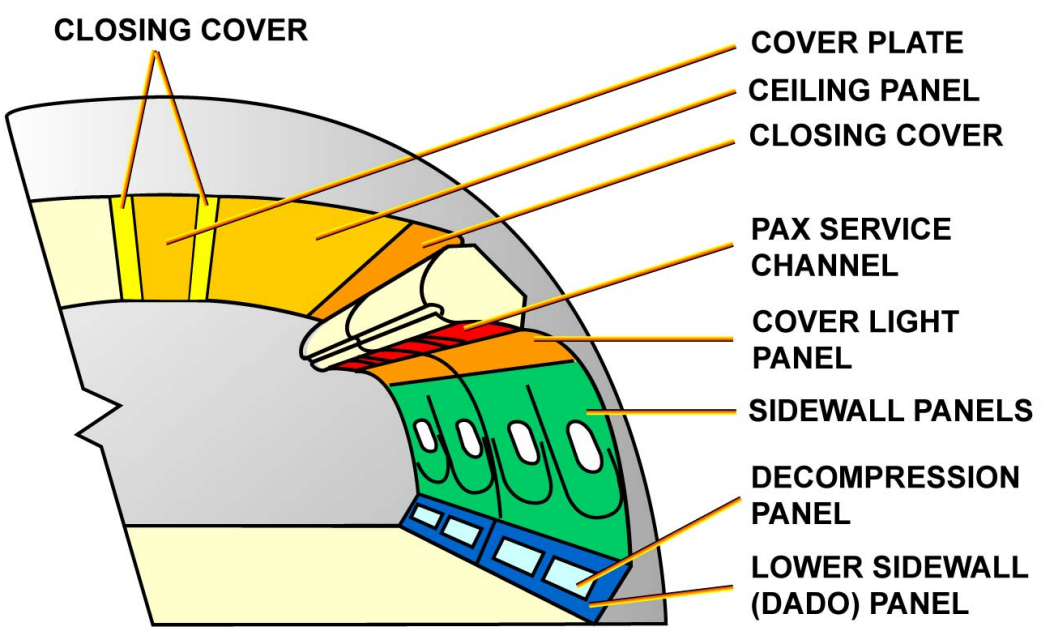

CABIN LININGS

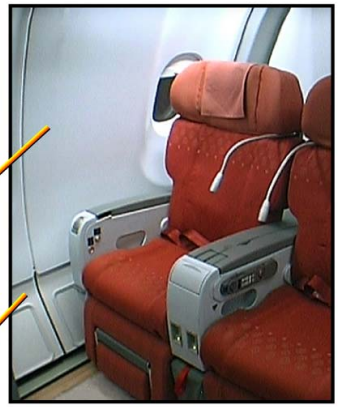

DOORS LINING

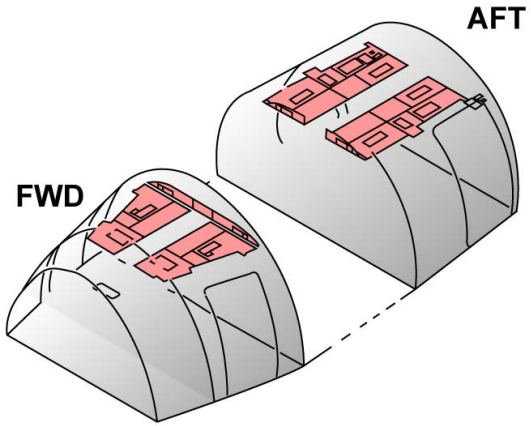

FWD AND AFT CEILING FLAT PANEL

LINING AND FURNISHING PANELS

G7508471 - G3NT1T0 - FM25D200000002

PASSENGER COMPARTMENT D/O (3)

LINING AND FURNISHING PANELS (continued)

DECOMPRESSION

The rapid decompression safety system prevents a pressure difference between the cabin and the cargo compartments when rapid decompression occurs. This system avoids a subsidence of the passenger compartment floor if rapid decompression occurs in flight.
This system is made of:
- rapid decompression panels in the cargo compartments,
- dado panels in the cabin,
- air grills in the stowage and lavatories.

the rapid decompression panels and the dado panels let the air flow between the cargo compartments and the cabin. The air grills let the air move freely to and from the housings.

G7508471 - G3NT1T0 - FM25D200000002

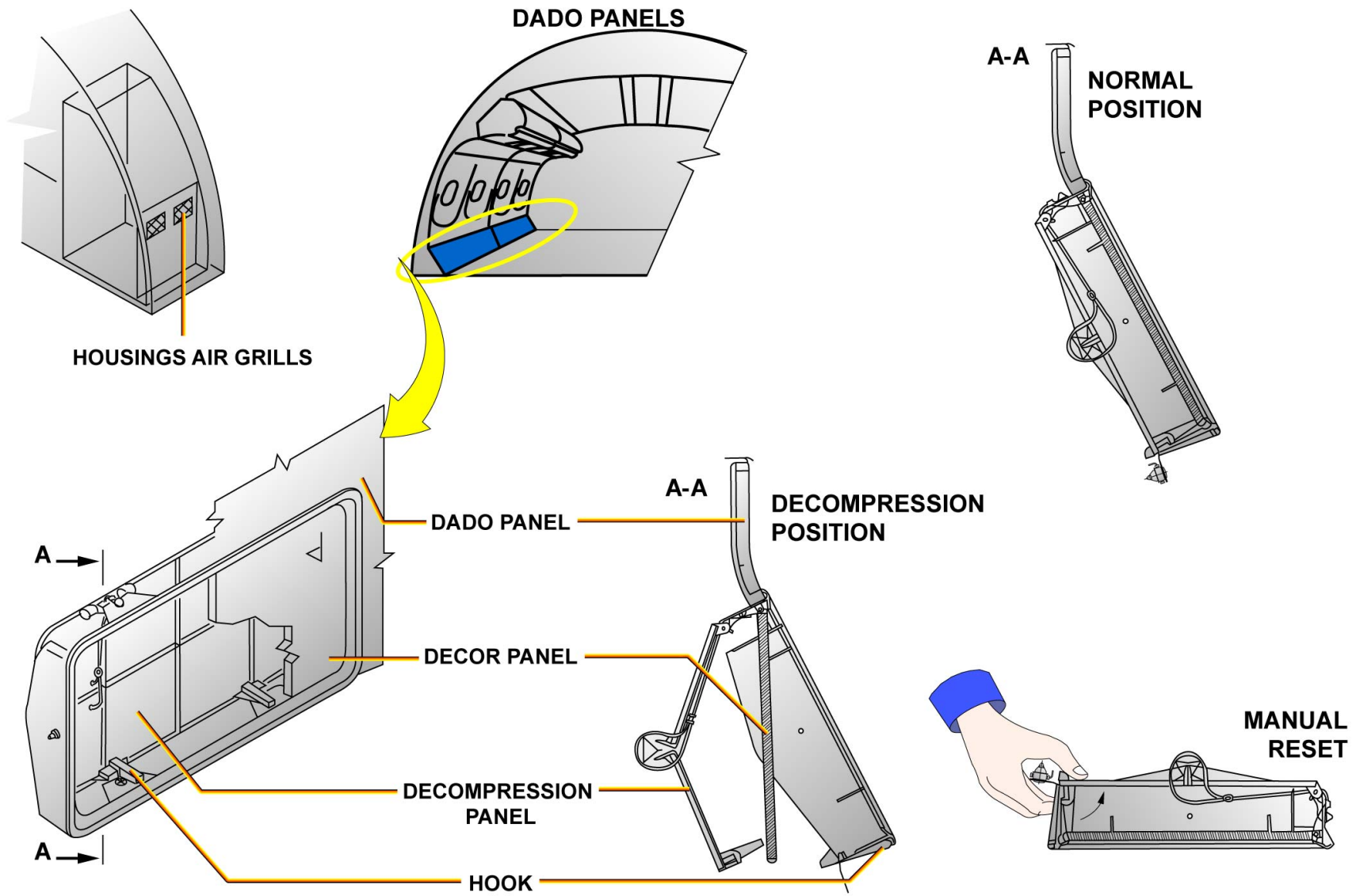

LINING AND FURNISHING PANELS - DECOMPRESSION

PASSENGER COMPARTMENT D/O (3)

LINING AND FURNISHING PANELS (continued)

INSULATION

The thermal and acoustical insulation insulates the pressurized area of the fuselage against the outside temperature and noise. It is composed of insulation blankets and insulation foam bonded with the panel. The thermal and acoustic insulation is present in the following areas:
- between the frames,
- over the frames,
- over the structure brackets,
- on the cargo-compartment floor panels,
- on the pressure bulkheads.

G7508471 - G3NT1T0 - FM25D200000002

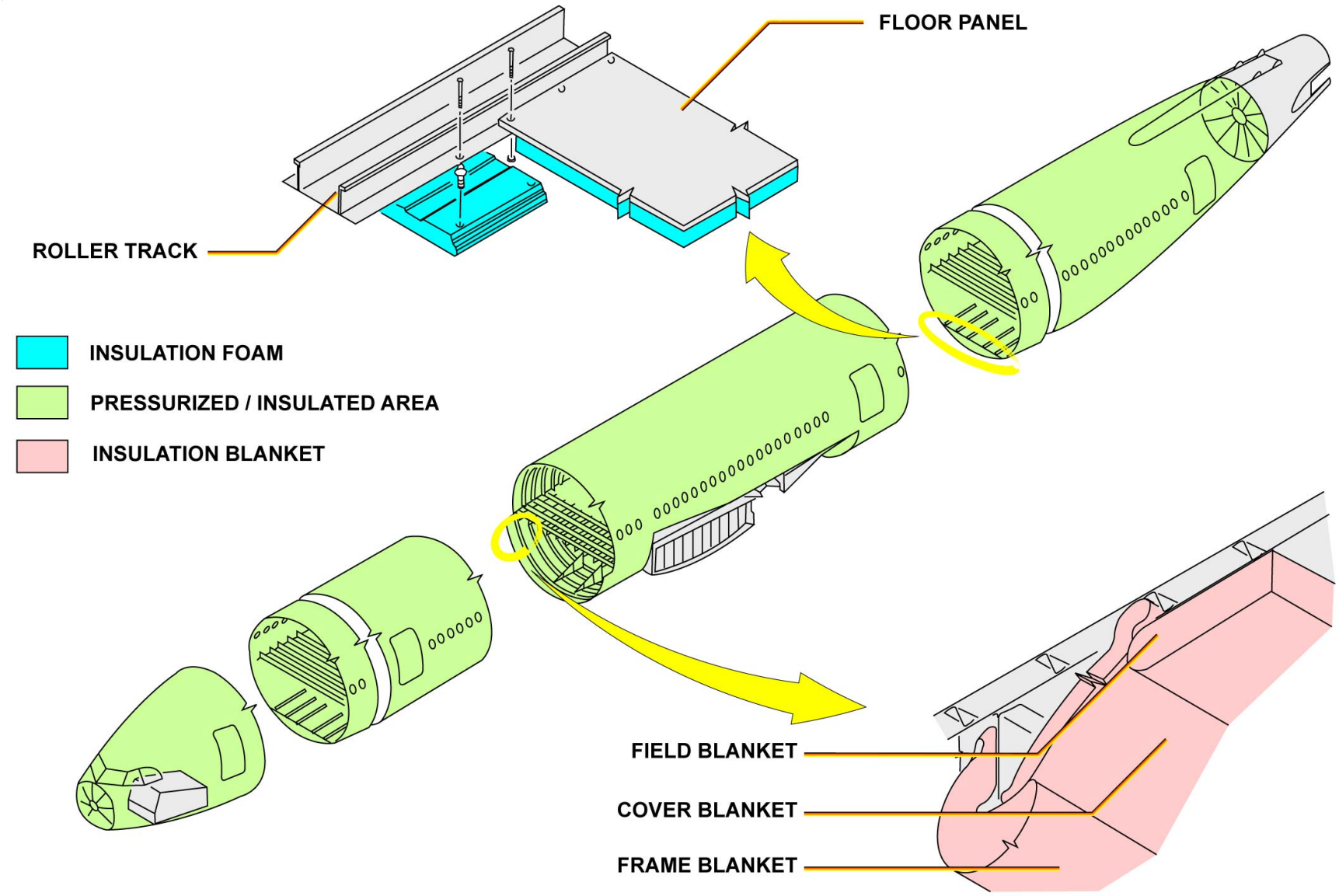

LINING AND FURNISHING PANELS - INSULATION

G7508471 - G3NT1T0 - FM25D200000002

PASSENGER COMPARTMENT D/O (3)

LINING AND FURNISHING PANELS (continued)

HEATED FLOOR PANEL SYSTEM (HFPS)

Heated Floor Panels (HFPs) are installed to increase the temperature of the cabin area in the following areas:
- in the area of the passenger/crew doors (from door 1 thru 4),
- in the area of the emergency exits,
- in the aft galley area.

Two Ice Protection Control Units (IPCUs) control and monitor the HFPs and are installed in the underfloor compartments:
- the IPCU located in the avionics compartment controls the forward area,
- the IPCU located in the aft cargo compartment controls the aft area.

The Floor Temperature Setting Panels (FTSPs) are installed to indicate and to adjust the HFPs status but also to test the HFPS with a BITE function. FTSPs are located:
- in the RH area of the passenger/crew doors,
- and at the rear wall of the aft galley area.

G7508471 - G3NT1T0 - FM25D200000002

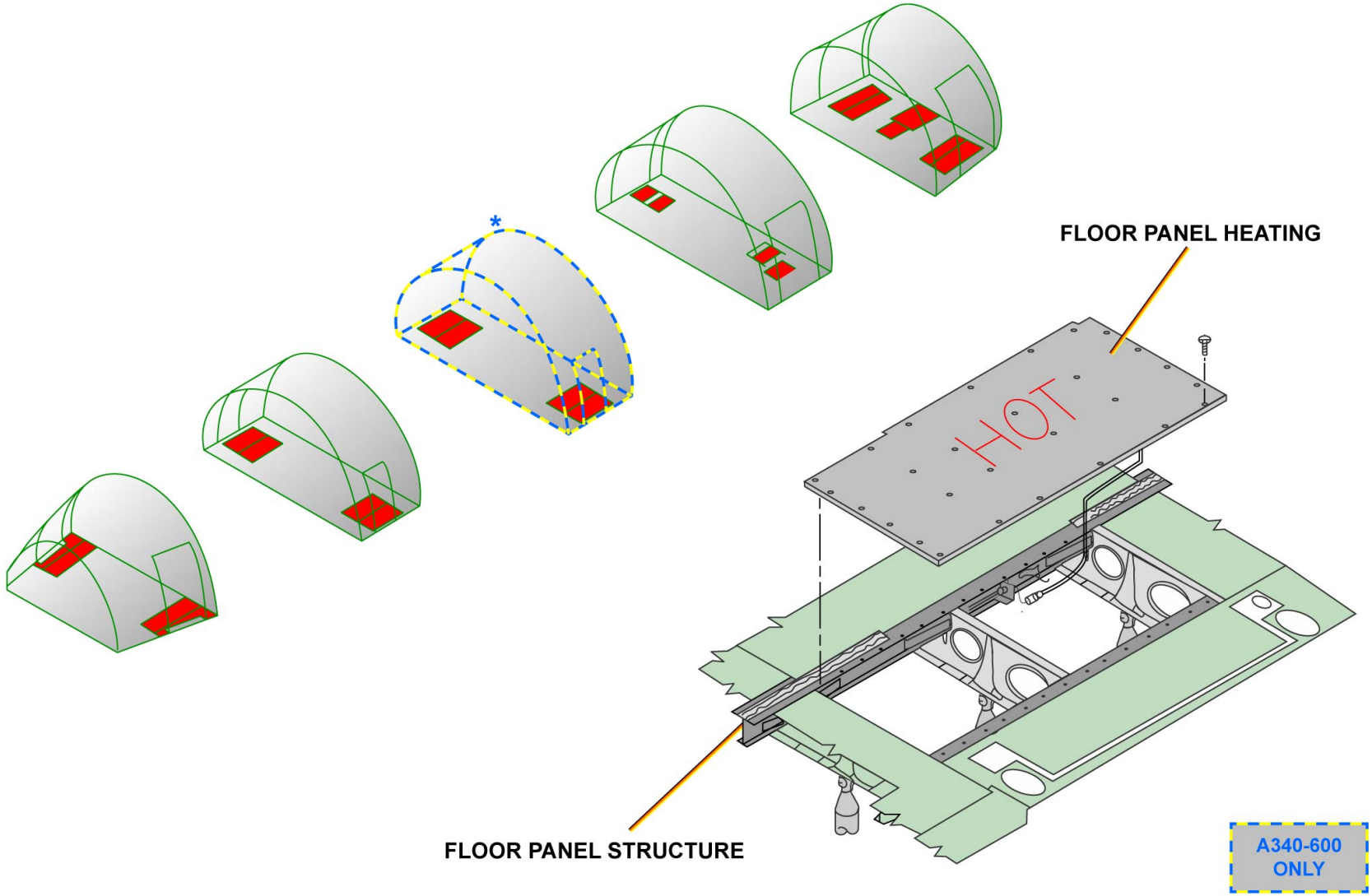

LINING AND FURNISHING PANELS - HEATED FLOOR PANEL SYSTEM (HFPS)

G7508471 - G3NT1T0 - FM25D200000002

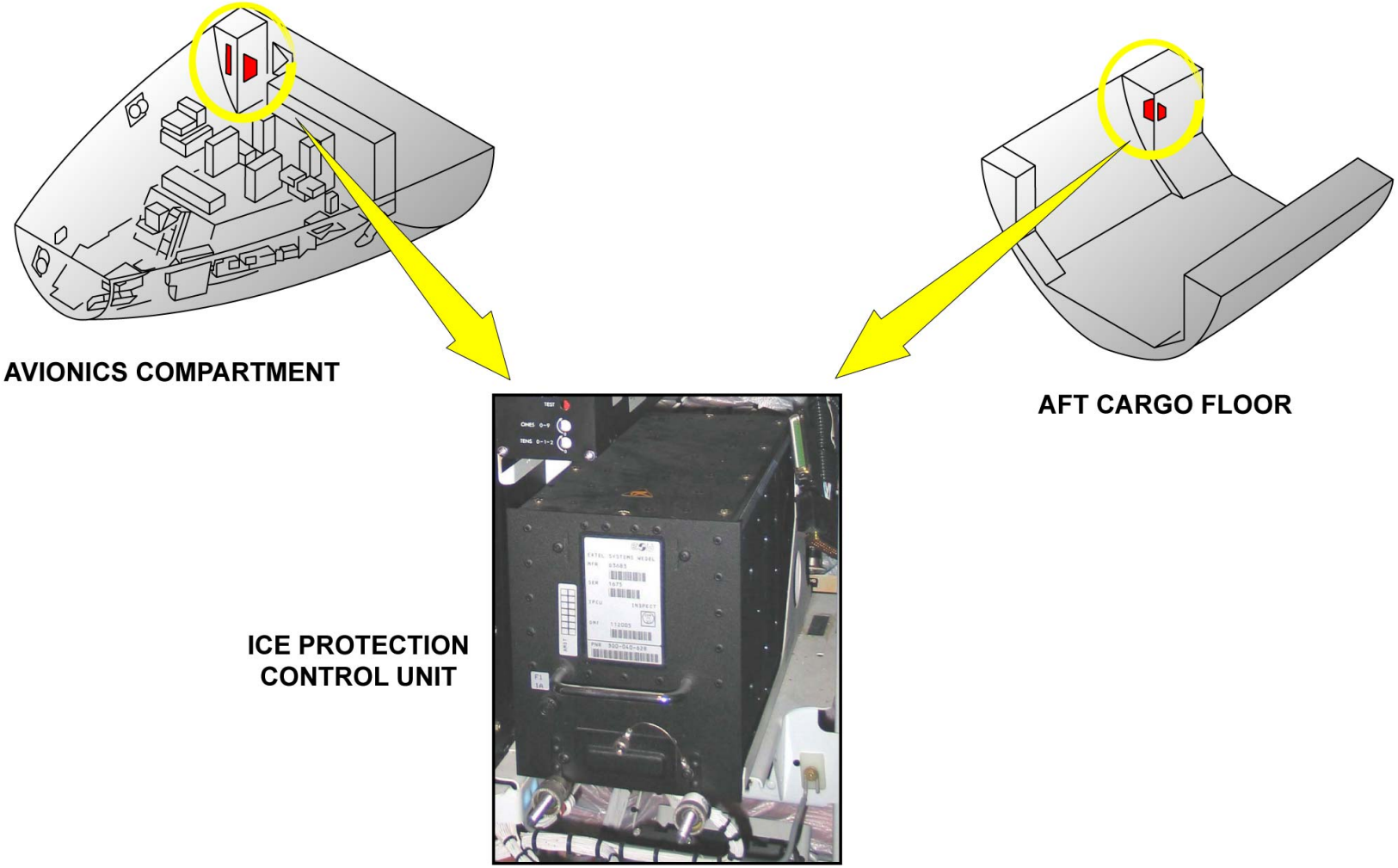

LINING AND FURNISHING PANELS - HEATED FLOOR PANEL SYSTEM (HFPS)

G7508471 - G3NT1T0 - FM25D200000002

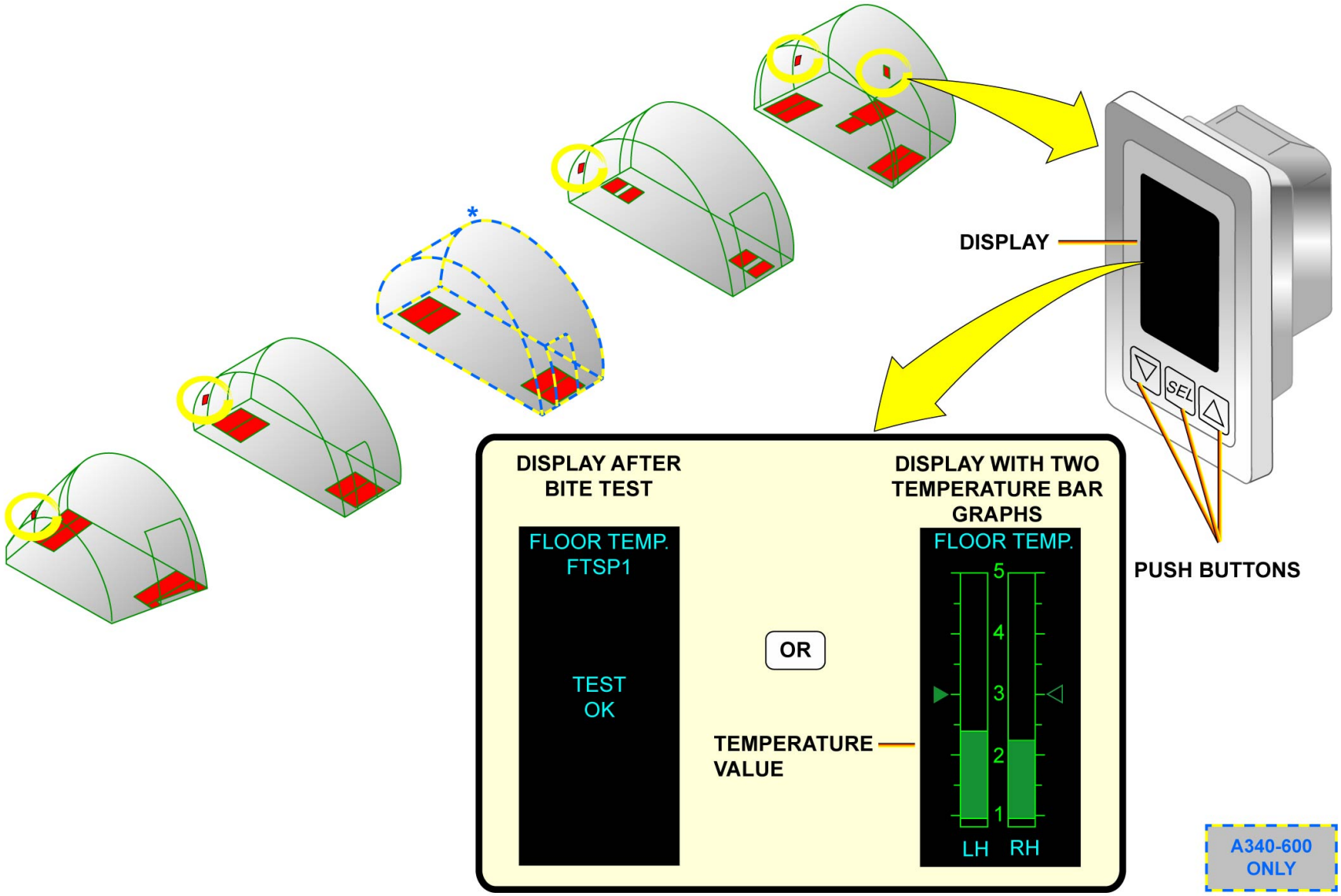

LINING AND FURNISHING PANELS - HEATED FLOOR PANEL SYSTEM (HFPS)

G7508471 - G3NT1T0 - FM25D200000002

PASSENGER COMPARTMENT D/O (3)

LINING AND FURNISHING LAYOUT

The floor covering is installed in the cabin and in the utility areas. The floor of the passenger area is covered with textile materials. The floor of each cabin utility area is covered with non-textile materials.
This protects the floor structure from liquids that can cause corrosion.
Textile flooring is installed with double-sided adhesive tape around the outer edges of each piece except for the aisle where it is fully bonded.
Stainless-steel cover-strips are installed across the aisles to cover the joints between the textile and the non-textile floor coverings. The seat tracks below the non-textile floor covering are treated with a corrosion inhibitor spray. Adhesive foil attaches the non-textile floor covering to the floor panels.

G7508471 - G3NT1T0 - FM25D200000002

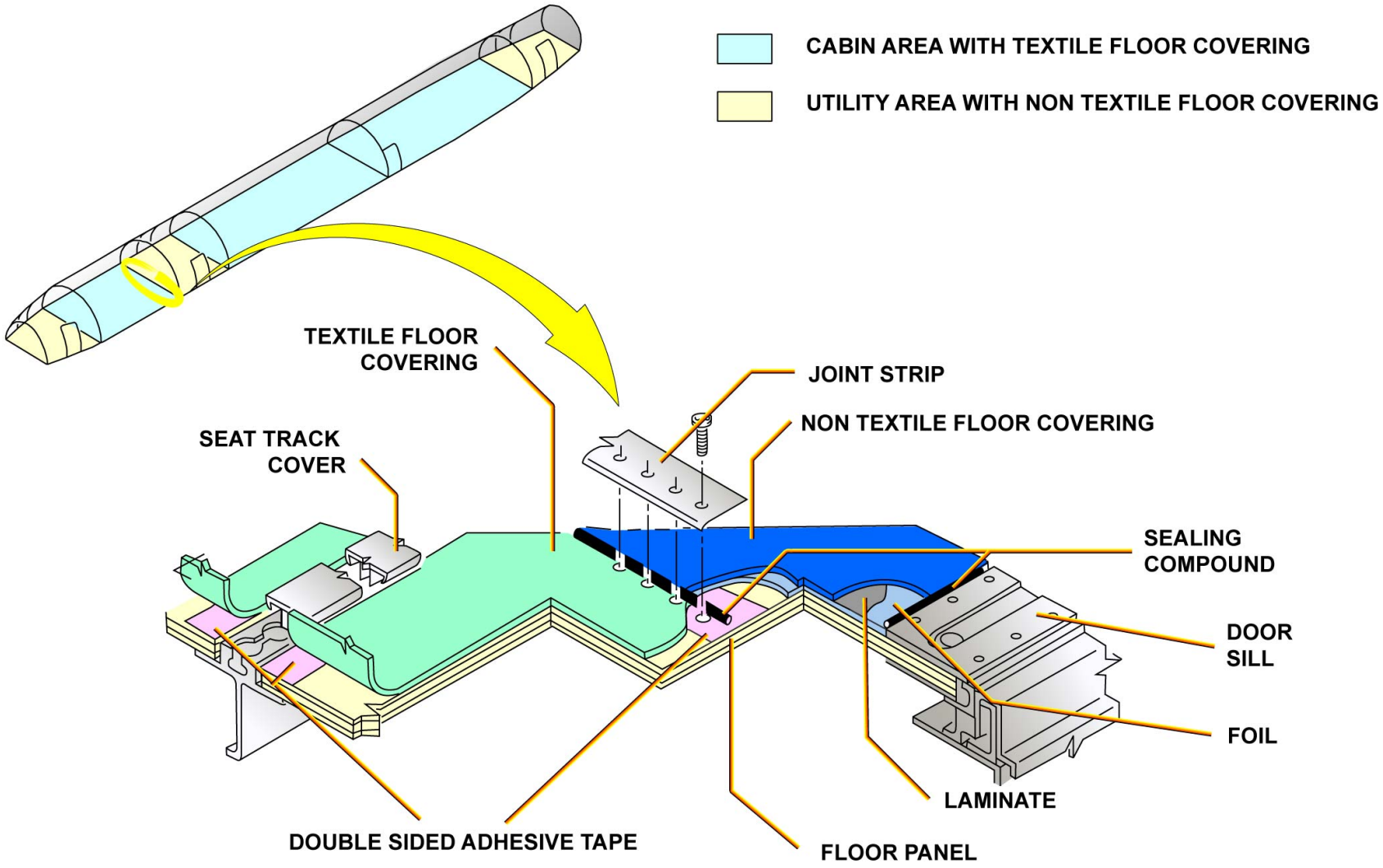

LINING AND FURNISHING LAYOUT

G7508471 - G3NT1T0 - FM25D200000002

PASSENGER COMPARTMENT D/O (3)

LINING AND FURNISHING LAYOUT (continued)

SEPARATION AND OVERHEAD STOWAGE

The curtains and partitions are used for separation between the utility and the seating areas. The OverHead Stowage Compartments (OHSCs) are installed for stowage passenger luggage and miscellaneous equipment. There are three kinds of compartment:
- the lateral OHSCs,
- the center OHSCs,
- the center retractable OHSCs.

The stowage is also used for ancillary items and emergency equipment. Some of the stowage has electrical equipment installed.
The lateral OHSCs are single-box structures and each stowage has one or two doors with a locking mechanism. The center OHSCs are double-box structures and each stowage has two or four doors with a locking mechanism. The center retractable OHSCs are double-box structures. Each stowage compartment has an access door and a bin. Each bin has two rollers, which are located in the guide rails on the stowage compartment and a locking mechanism.

G7508471 - G3NT1T0 - FM25D200000002

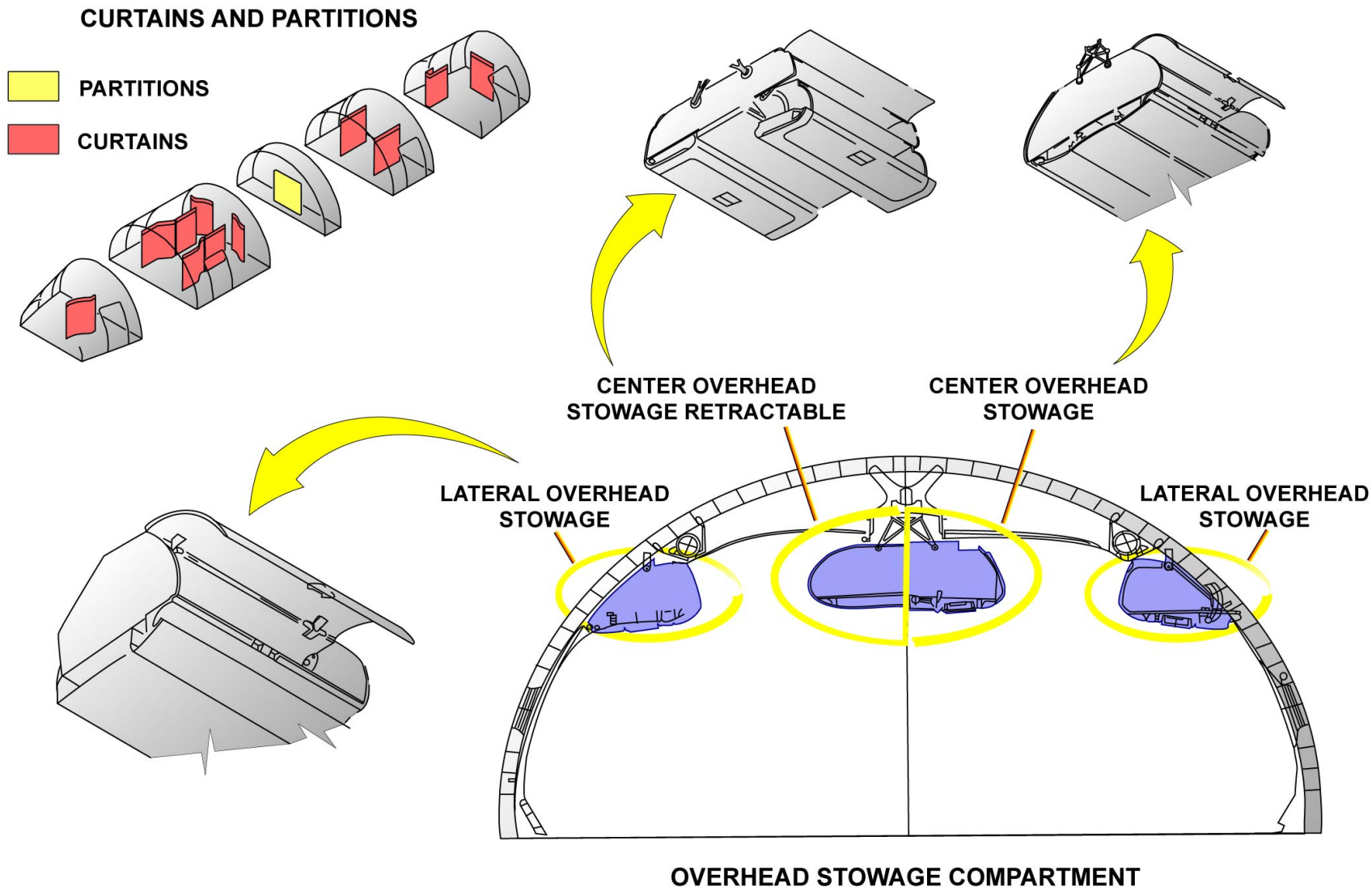

LINING AND FURNISHING LAYOUT - SEPARATION AND OVERHEAD STOWAGE

PASSENGER COMPARTMENT D/O (3)

PASSENGER SERVICE CHANNEL

The Passenger Service/Information Units (PSIUs) are installed in the passenger service channels adjacent to the emergency oxygen containers. The passenger service channels are found at the bottom of the OHSCs above each seat row. If the center OHSCs are not installed, the PSIUs are installed in the cabin ceiling.
Each PSIU has two primary units:
- the Passenger Service Unit (PSU),
- the Passenger Information Unit (PIU).

The PSUs are installed above each seat row, the PIUs above each second seat row. The PSIU could be divided into various parts:
- a reading light panel,
- a fresh air outlet panel,
- a loudspeaker,
- a "FASTEN SEAT BELT" lighted sign,
- a "NO SMOKING" lighted sign.

G7508471 - G3NT1T0 - FM25D200000002

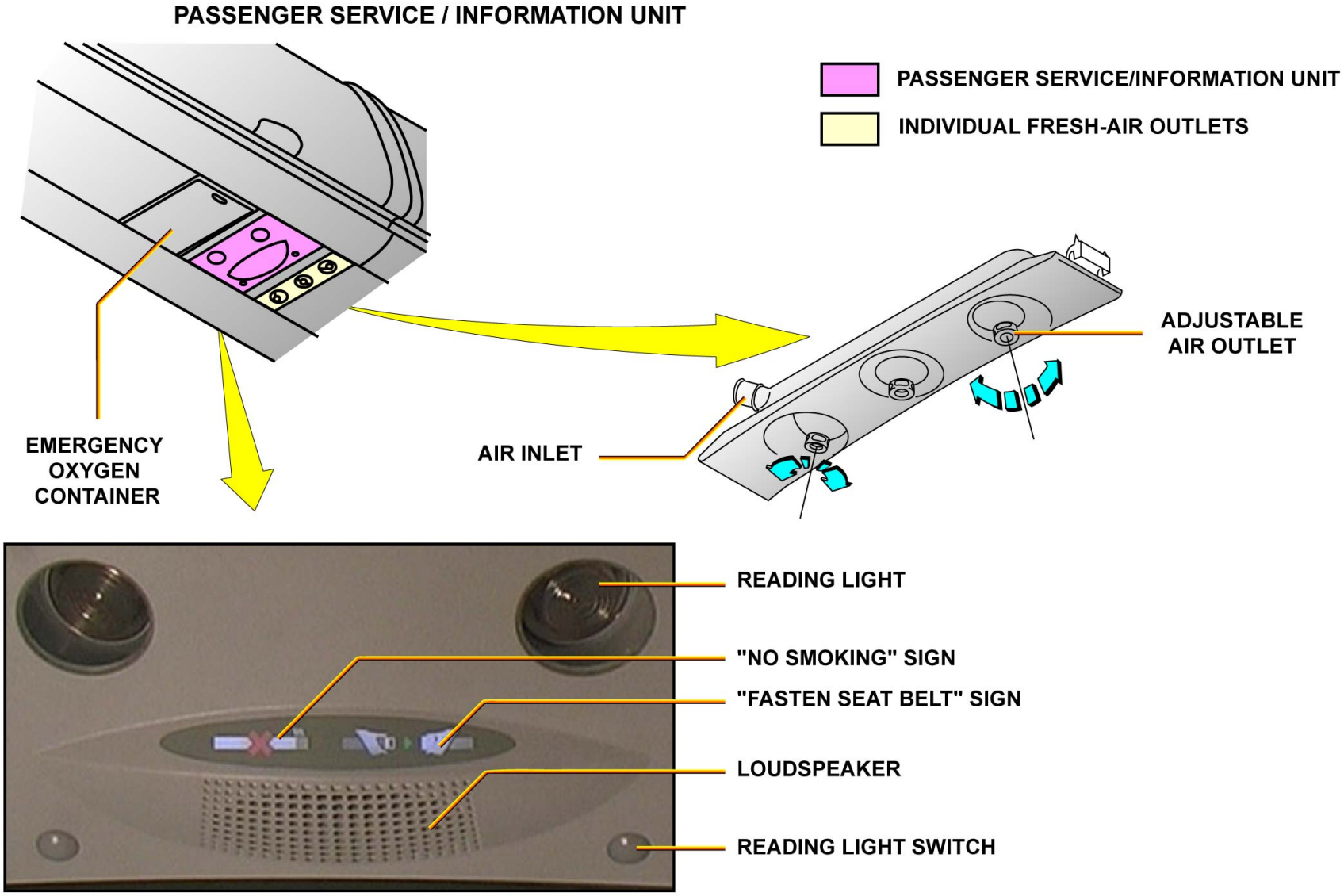

PASSENGER SERVICE CHANNEL

G7508471 - G3NT1T0 - FM25D200000002

PASSENGER COMPARTMENT D/O (3)

PASSENGER SERVICE CHANNEL (continued)

PSIU INTERFACES

The PSIU has interfaces with the following systems:
- air conditioning system,
- communication system,
- lighting system,
- oxygen system.

G7508471 - G3NT1T0 - FM25D200000002

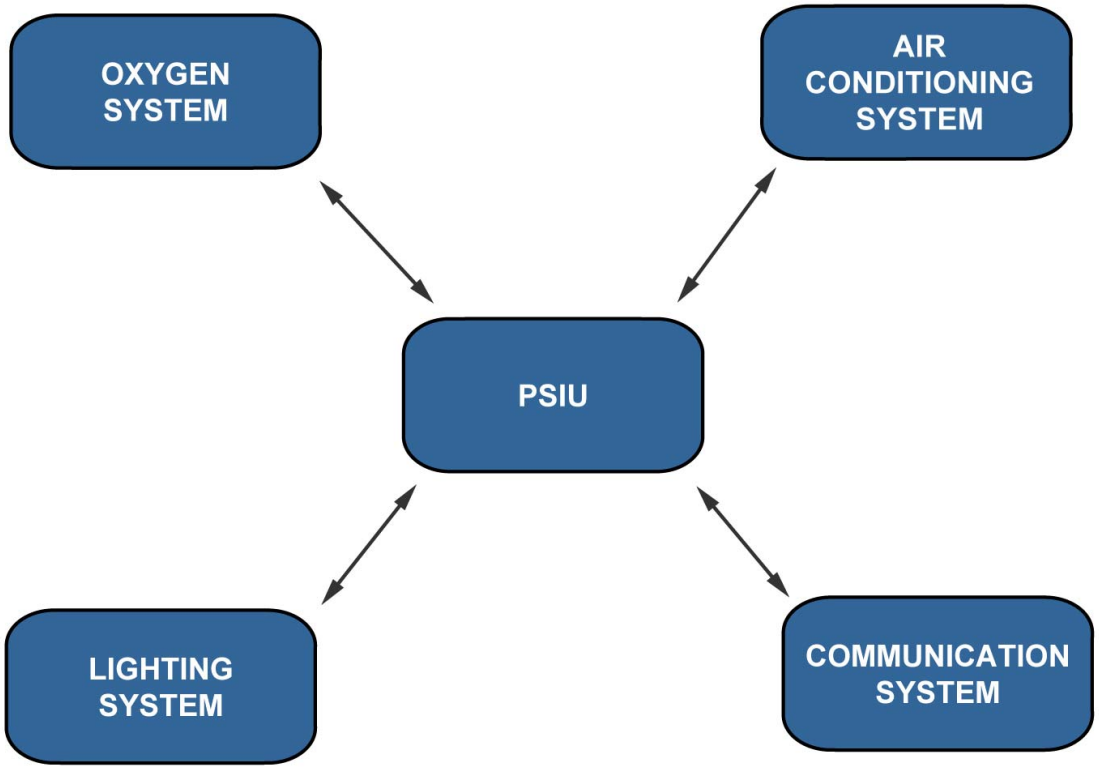

PASSENGER SERVICE CHANNEL - PSIU INTERFACES

G7508471 - G3NT1T0 - FM25D200000002

PASSENGER COMPARTMENT D/O (3)

PASSENGER COMPARTMENT SEAT

The passenger compartment can be laid out according to the airline request. The cabin configuration determines the type, the amount and the position of passenger seats.
The three typical configurations are:
- one first class, one business class and one tourist class,
- one business class and one tourist class,
- only one tourist class.

G7508471 - G3NT1T0 - FM25D200000002

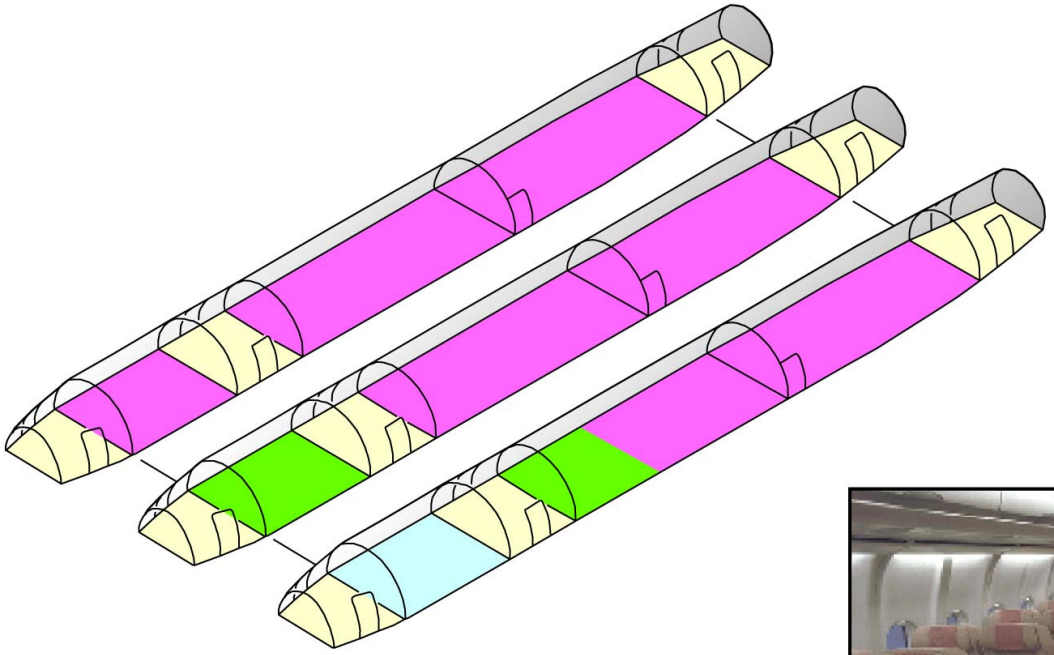

EXAMPLE OF DOUBLE AND QUADRUPLE SEATS FOR TOURIST CLASS

- UTILITY AREA
- FIRST CLASS
- BUSINESS CLASS
- TOURIST CLASS

PASSENGER COMPARTMENT SEAT

G7508471 - G3NT1T0 - FM25D200000002

PASSENGER COMPARTMENT D/O (3)

PASSENGER COMPARTMENT SEAT (continued)

PASSENGER SEAT DESCRIPTION

In each class, there are several types of passenger seat assemblies:
- single seat,
- double seat,
- triple seat,
- quadruple seat.

In the seat, there are the following components:
- seat electronic box,
- life vest container,
- baggage bar,
- framework,
- seat cushion,
- seat belt,
- folding armrest,
- backrest upholstery,
- folding table,
- Passenger Control Unit (PCU),
- fixed armrest.

G7508471 - G3NT1T0 - FM25D200000002

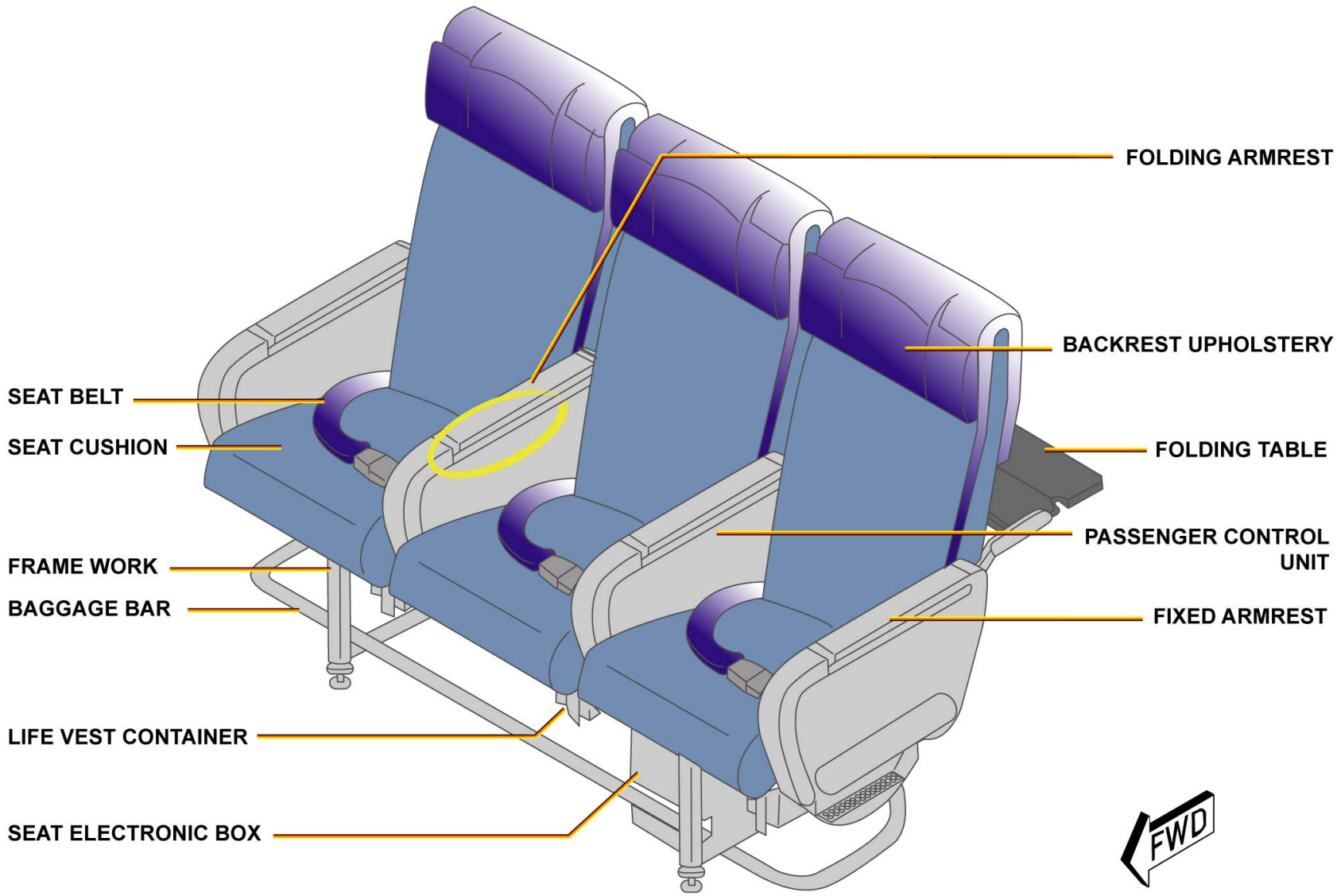

PASSENGER COMPARTMENT SEAT - PASSENGER SEAT DESCRIPTION

G7508471 - G3NT1T0 - FM25D200000002

PASSENGER COMPARTMENT D/O (3)

PASSENGER COMPARTMENT SEAT (continued)

PASSENGER SEAT ATTACHMENT DESCRIPTION

The passenger seats are installed on the seat tracks of the cabin floor structure. Quick release fittings at the front and the rear legs hold the seats in position.
During a passenger seat installation, make sure that the front stud is correctly installed in the front leg before you install the seat assembly on the seat track.

G7508471 - G3NT1T0 - FM25D200000002

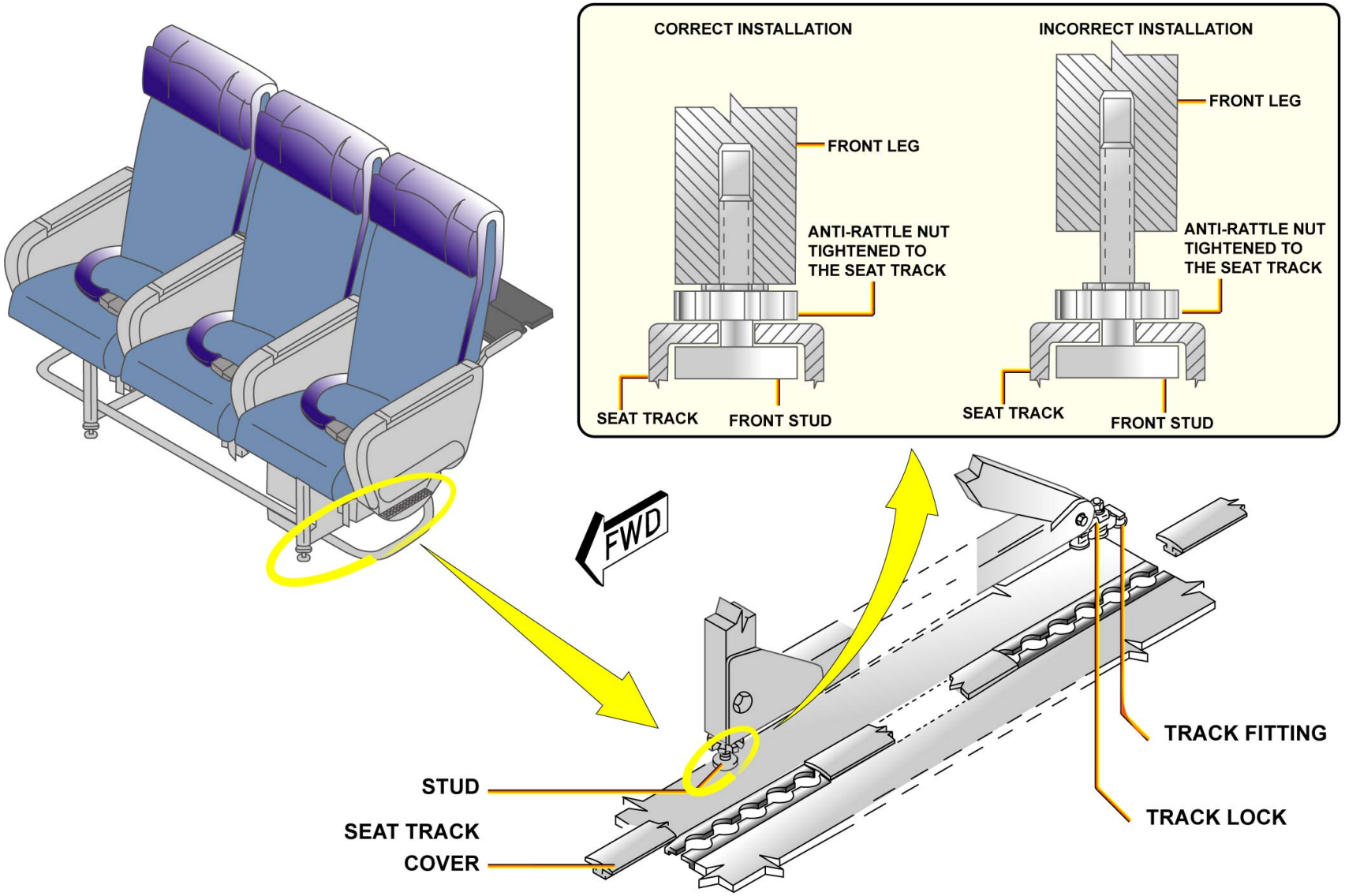

PASSENGER COMPARTMENT SEAT - PASSENGER SEAT ATTACHMENT DESCRIPTION

G7508471 - G3NT1T0 - FM25D200000002

PASSENGER COMPARTMENT D/O (3)

CABIN ATTENDANT SEAT

The cabin configuration determines the amount and the position of cabin attendant seats. Cabin-attendant seats have:
- a stowage compartment,
- a folding seat pan,
- a backrest with cushion,
- a seat belt and shoulder harness,
- an aluminium seat frame,
- a headrest with cushion.

There are two different types of fixation for cabin attendant seats:
- floor-mounted, with seat rail,
- wall-mounted.

G7508471 - G3NT1T0 - FM25D200000002

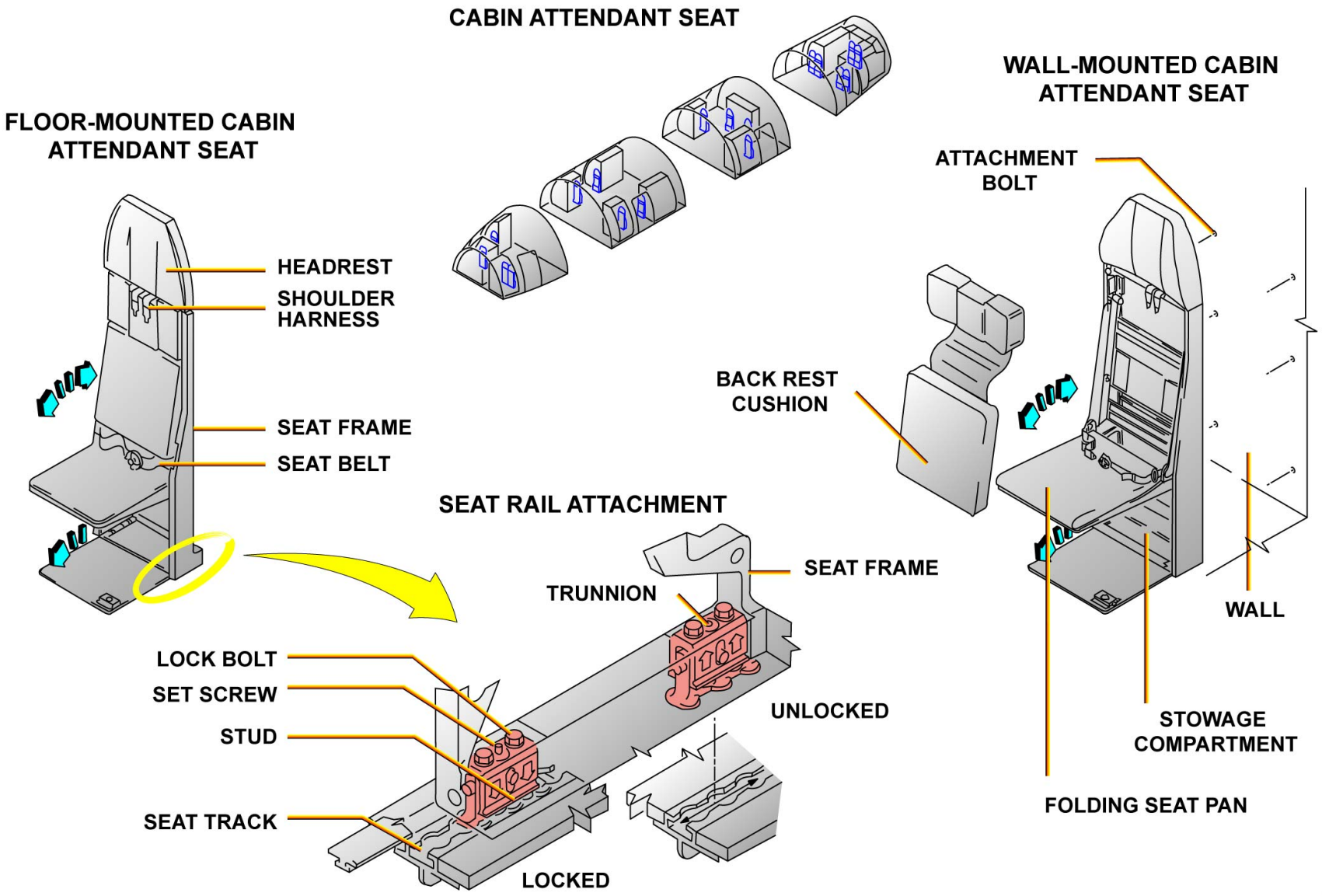

CABIN ATTENDANT SEAT

G7508471 - G3NT1T0 - FM25D200000002

PASSENGER COMPARTMENT D/O (3)

GALLEY

The buffet and galley are installed in the cabin. They are used for food preparation and drink storing. You can install them in a number of different configurations.

TYPE AND POWER SUPPLY

There is a wet galley unit, supplied with electrical-operated equipment and used for food and drink preparation. And there is a dry galley unit, only used for food, drink and equipment storing. Galleys have specificity, like a bar, a storage or a preparation area. The galley power supply provides the galley with 115/200V AC, 400 Hz from the AC normal bus bars. The maximum load of each feeder is 15KVA.

G7508471 - G3NT1T0 - FM25D200000002

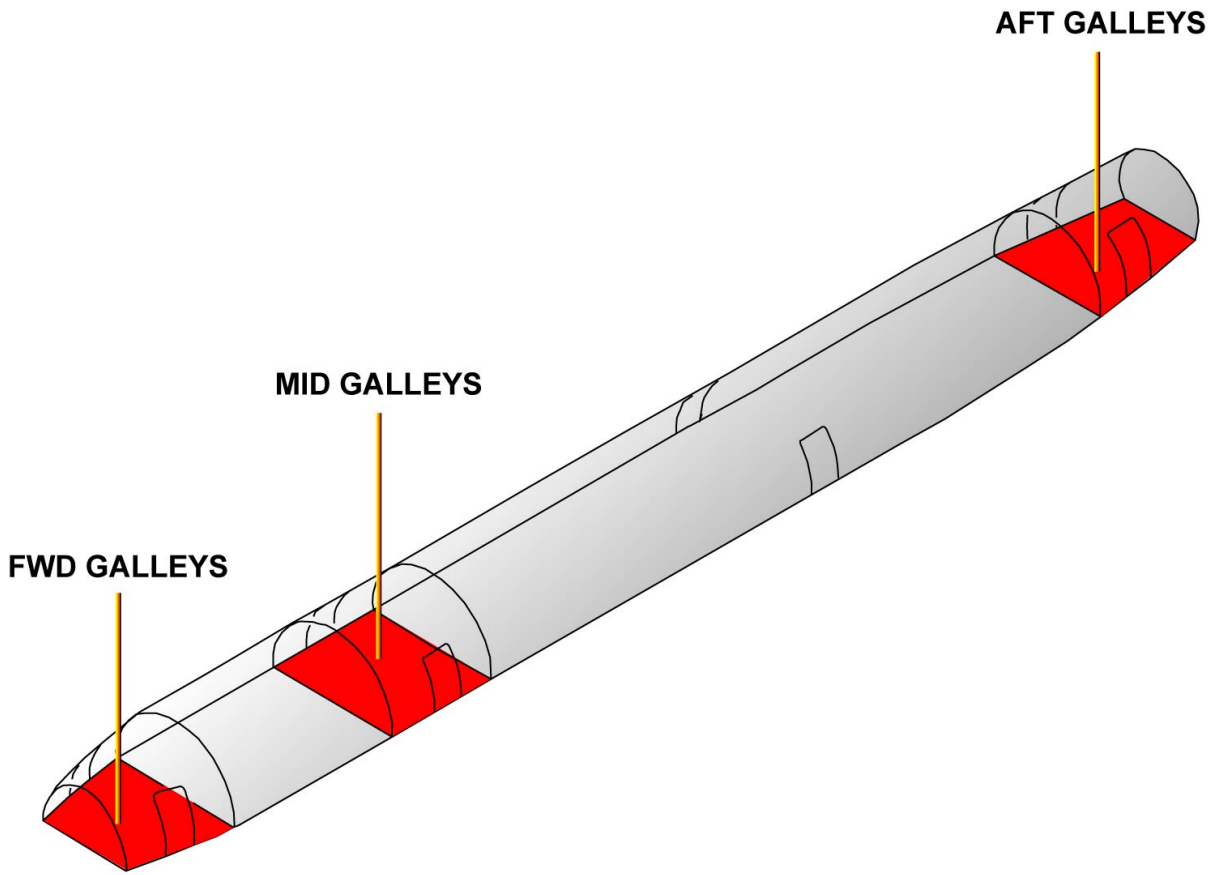

GALLEY - TYPE AND POWER SUPPLY

G7508471 - G3NT1T0 - FM25D200000002

PASSENGER COMPARTMENT D/O (3)

GALLEY (continued)

ATTACHMENTS

The galley basic structure is made of a honeycomb panel. The main galley attachment points are hardpoints and/or seat rail attachments on the floor, and ties rod attachment to the upper fuselage structure.

G7508471 - G3NT1T0 - FM25D200000002

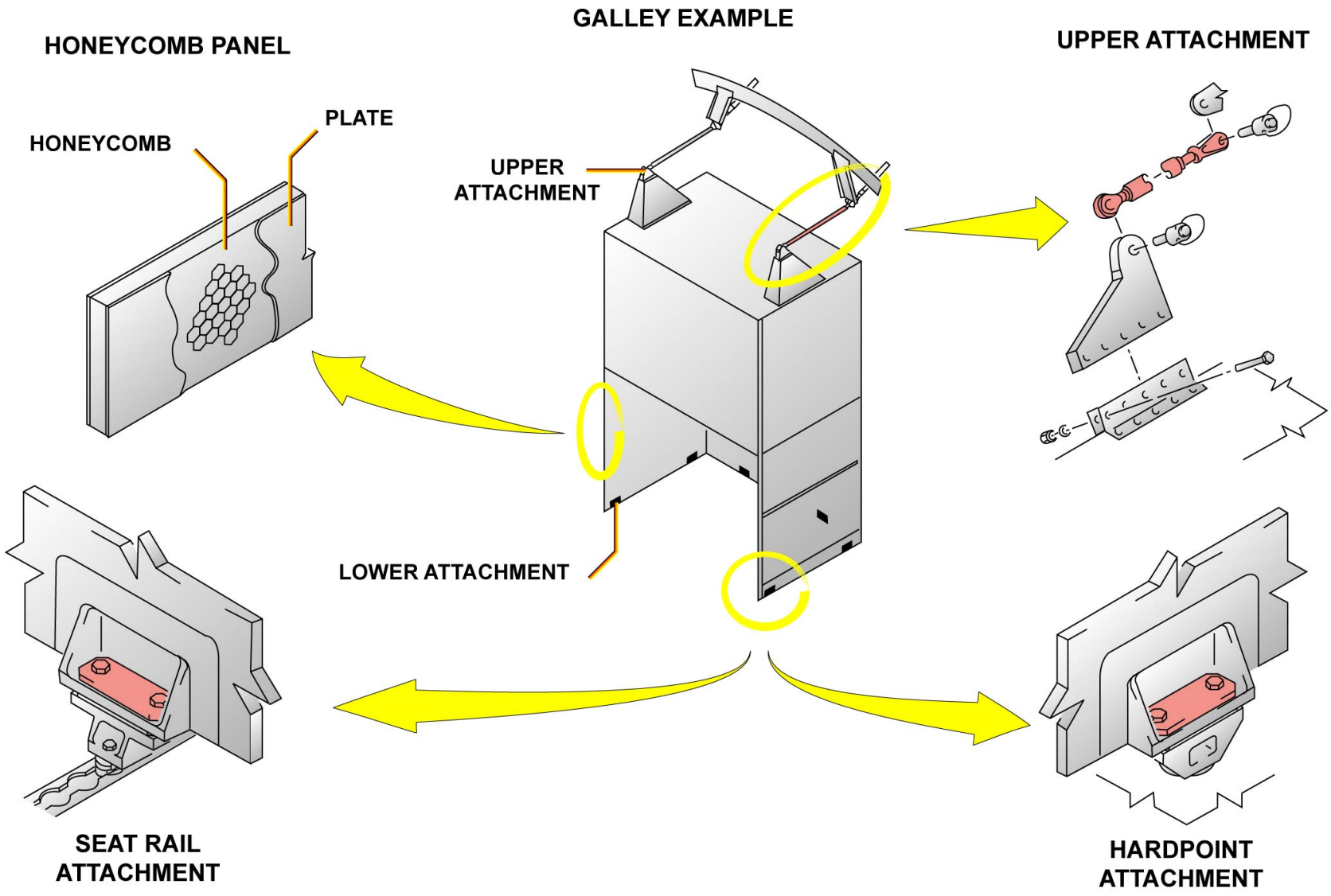

GALLEY - ATTACHMENTS

G7508471 - G3NT1T0 - FM25D200000002

PASSENGER COMPARTMENT D/O (3)

GALLEY (continued)

INTERFACES

The galley has an interface with:
- water/waste system,
- air conditioning system,
- galley cooling,
- passenger video entertainment system,
- galley electrical power supplies.

G7508471 - G3NT1T0 - FM25D200000002

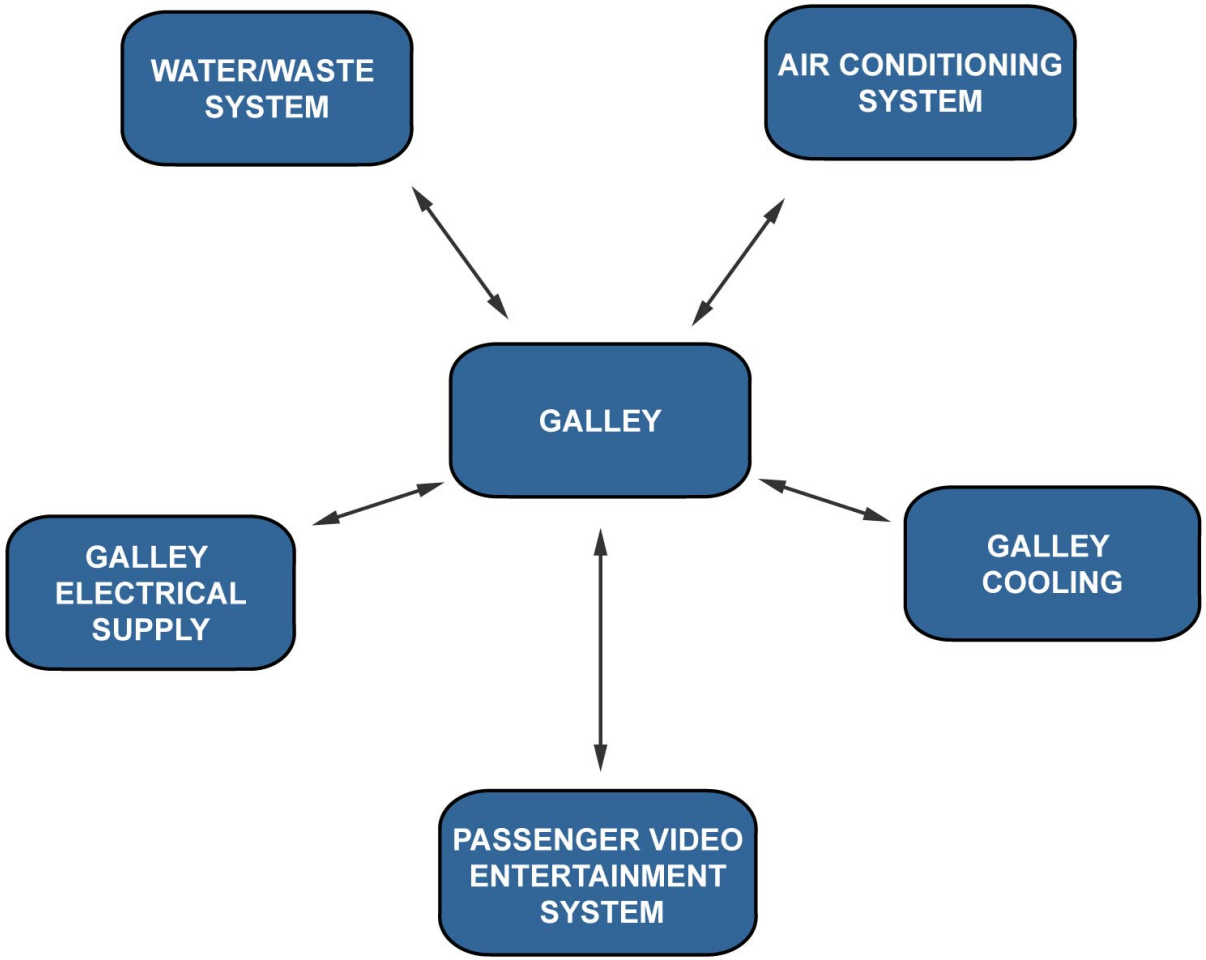

GALLEY - INTERFACES

G7508471 - G3NT1T0 - FM25D200000002

PASSENGER COMPARTMENT D/O (3)

GALLEY (continued)

EQUIPMENT

In the galley compartment there is the following equipment:
- refrigerator,
- oven,
- water heater,
- coffee maker,
- beverage maker,
- sink,
- hot cup,
- waste box,
- trolleys,
- trash compactor.

G7508471 - G3NT1T0 - FM25D200000002

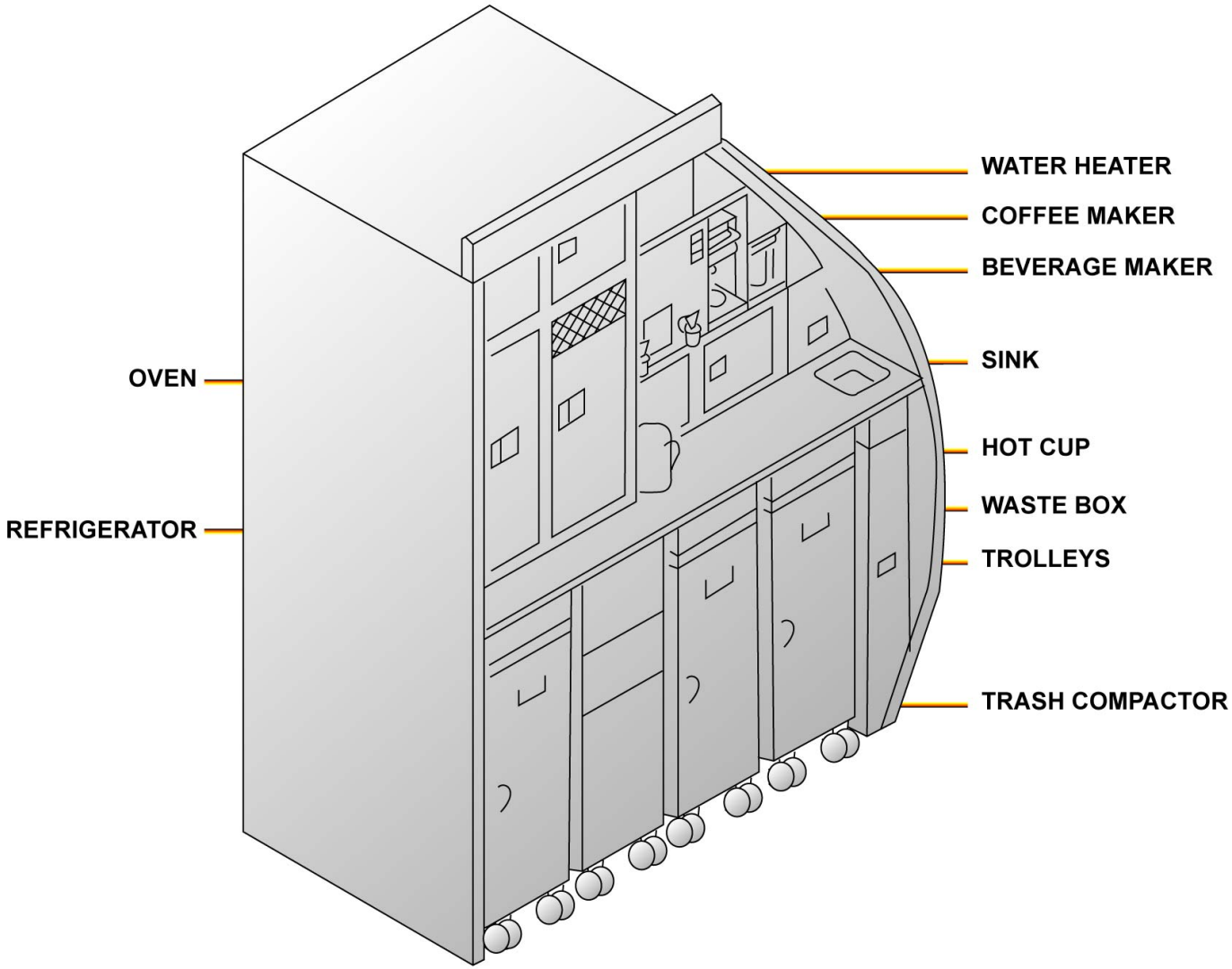

GALLEY - EQUIPMENT

G7508471 - G3NT1T0 - FM25D200000002

PASSENGER COMPARTMENT D/O (3)

LAVATORY

The lavatories are installed in the cabin. They are installed for the comfort of the passengers and crew. Each lavatory also has a washroom function.
There are two types of fixation for lavatories:
- set lavatories: attached on the hardpoints. The top of the lavatories is attached to the aircraft primary structure,
- moveable lavatories: attached to the seat rails. The tie-rods attach the top of the lavatories to the aircraft primary structure. The attachment on the seat rails allows different positioning of the lavatories at the installation. The basic structure is made of a sandwich panel like the lavatory doors.

Each door is locked with a micro switch. When the door is locked you can open it from outside if necessary. There are single-blade doors or bi-folding doors.

G7508471 - G3NT1T0 - FM25D200000002

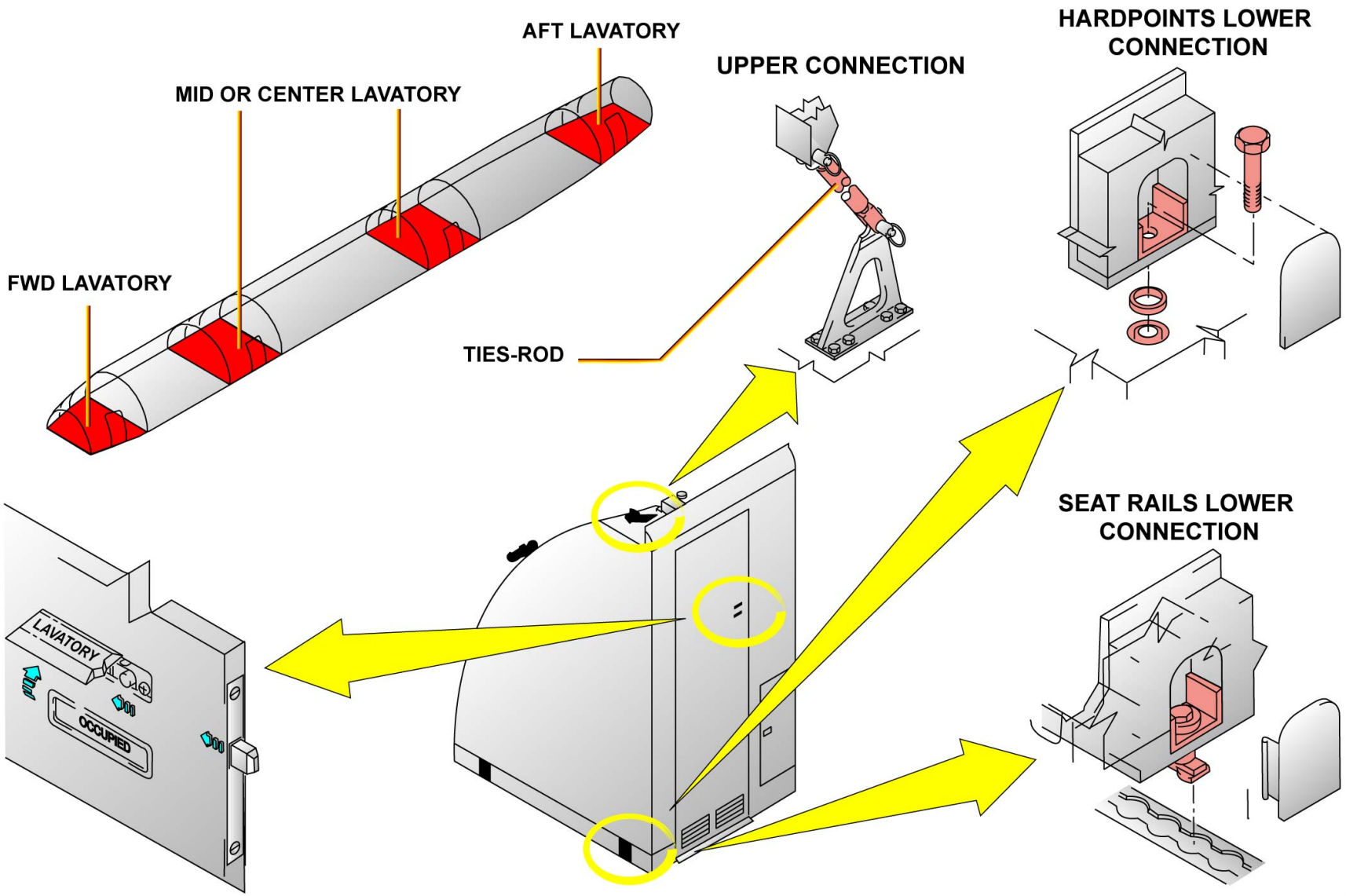

LAVATORY

G7508471 - G3NT1T0 - FM25D200000002

PASSENGER COMPARTMENT D/O (3)

LAVATORY (continued)

INTERFACES

Lavatories have interface with the following equipment:
- passenger address and entertainment system,
- air conditioning system,
- lavatory lighting,
- fire protection system,
- light sign system,
- electrical power supply system,
- passenger oxygen system,
- Cabin Intercommunication Data System (CIDS),
- waste disposal system,
- potable water system.

G7508471 - G3NT1T0 - FM25D200000002

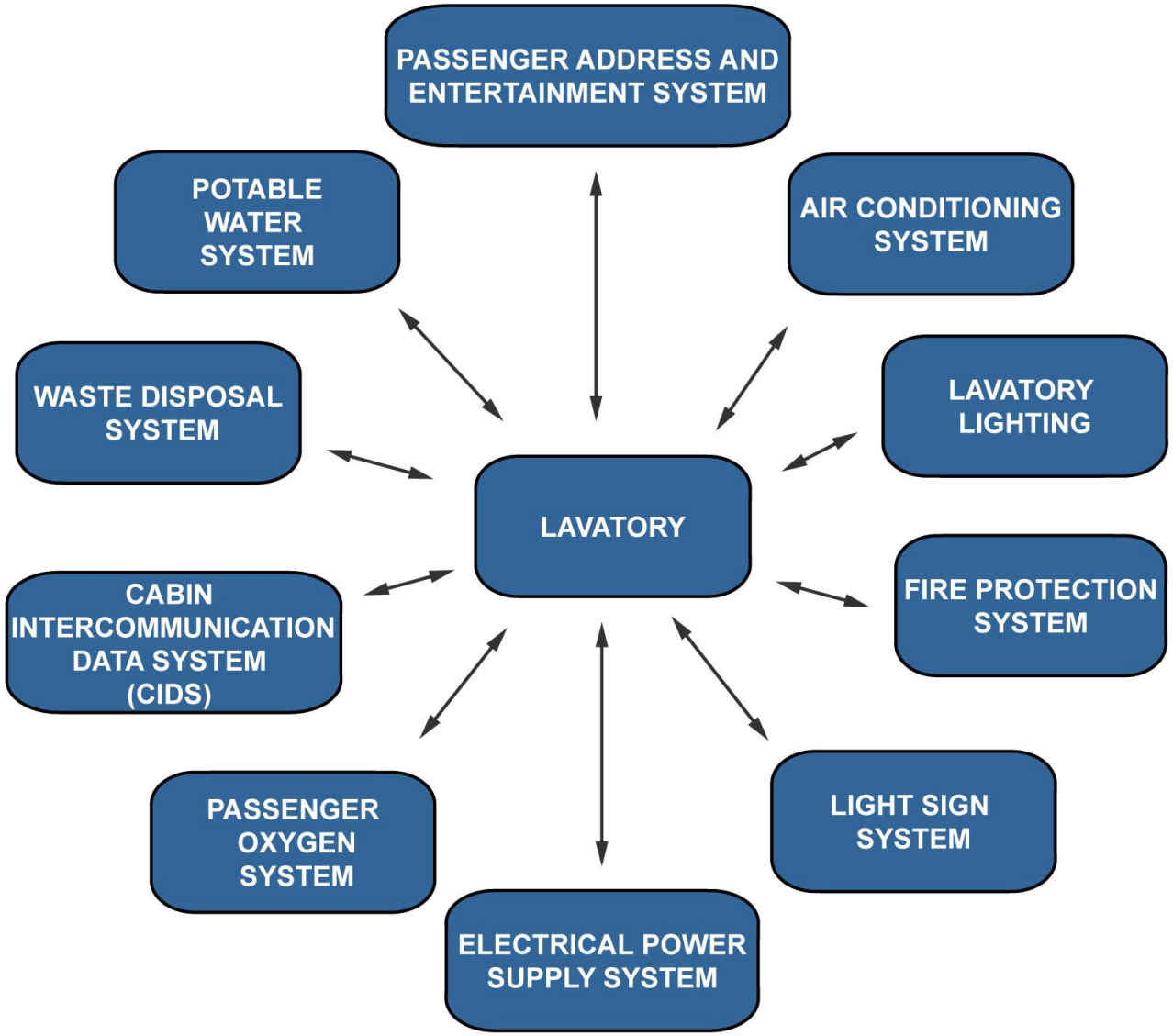

LAVATORY - INTERFACES

G7508471 - G3NT1T0 - FM25D200000002

PASSENGER COMPARTMENT D/O (3)

LAVATORY (continued)

COMPONENTS (PART 1/2)

These following components are found in the lavatories:
- toilet assembly,
- toilet shroud,
- hand grip,
- baby nursing table,
- toilet seat,
- toilet flush switch,
- light,
- service cabinet,
- mirror,
- soap dispenser,
- water faucet,
- washbasin,
- waste chute,
- ashtray,
- door lock,
- door.

G7508471 - G3NT1T0 - FM25D200000002

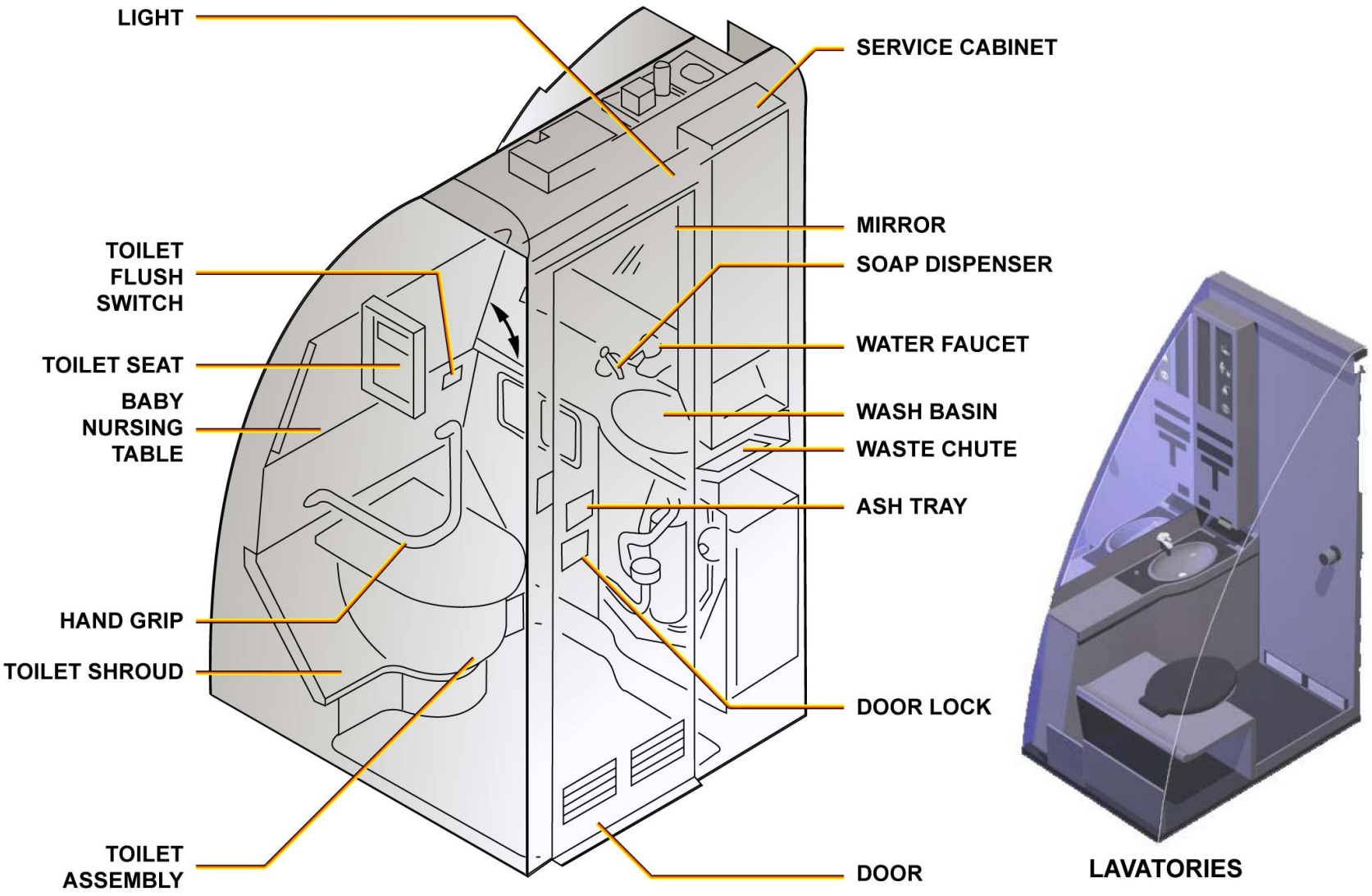

LAVATORY - COMPONENTS (PART 1/2)

G7508471 - G3NT1T0 - FM25D200000002

PASSENGER COMPARTMENT D/O (3)

LAVATORY (continued)

COMPONENTS (PART 2/2)

The following components are also included in the lavatories:
- access door,
- water heater,
- fire extinguisher,
- waste box,
- door micro switch,
- air extraction,
- emergency oxygen container,
- smoke detector,
- loudspeaker,
- individual air outlet,
- dispenser,
- PSU.

G7508471 - G3NT1T0 - FM25D200000002

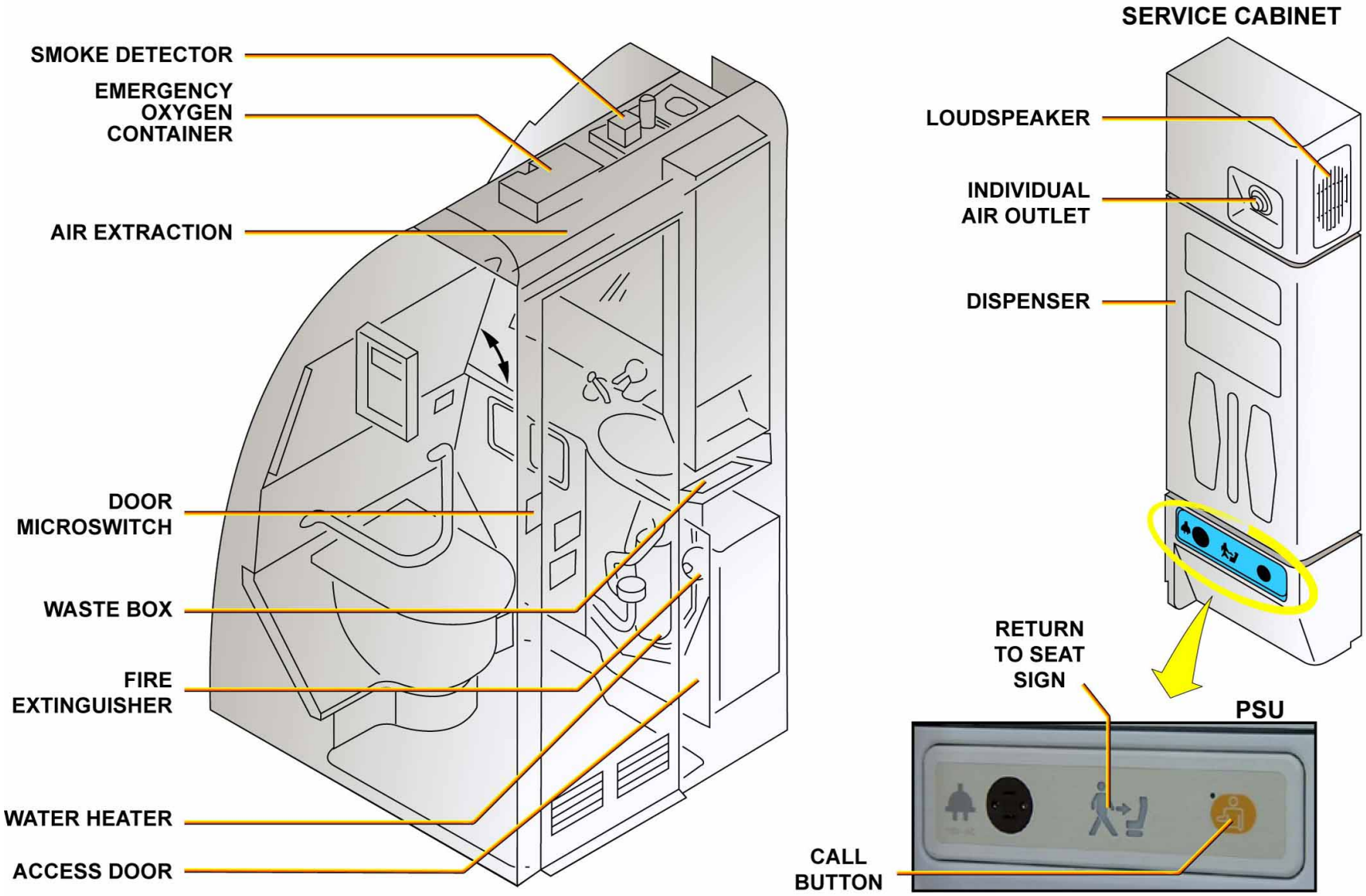

LAVATORY - COMPONENTS (PART 2/2)

G7508471 - G3NT1T0 - FM25D200000002

PASSENGER COMPARTMENT D/O (3)

ELECTRICAL PLUG SUPPLY

The electrical service supply is installed in the cabin and the cargo compartments. It supplies electrical power to the socket that you can use for electrical equipment. The electrical plug supply is installed near every entrance door. There is an electrical razor plug supply installed in each lavatory.

G7508471 - G3NT1T0 - FM25D200000002

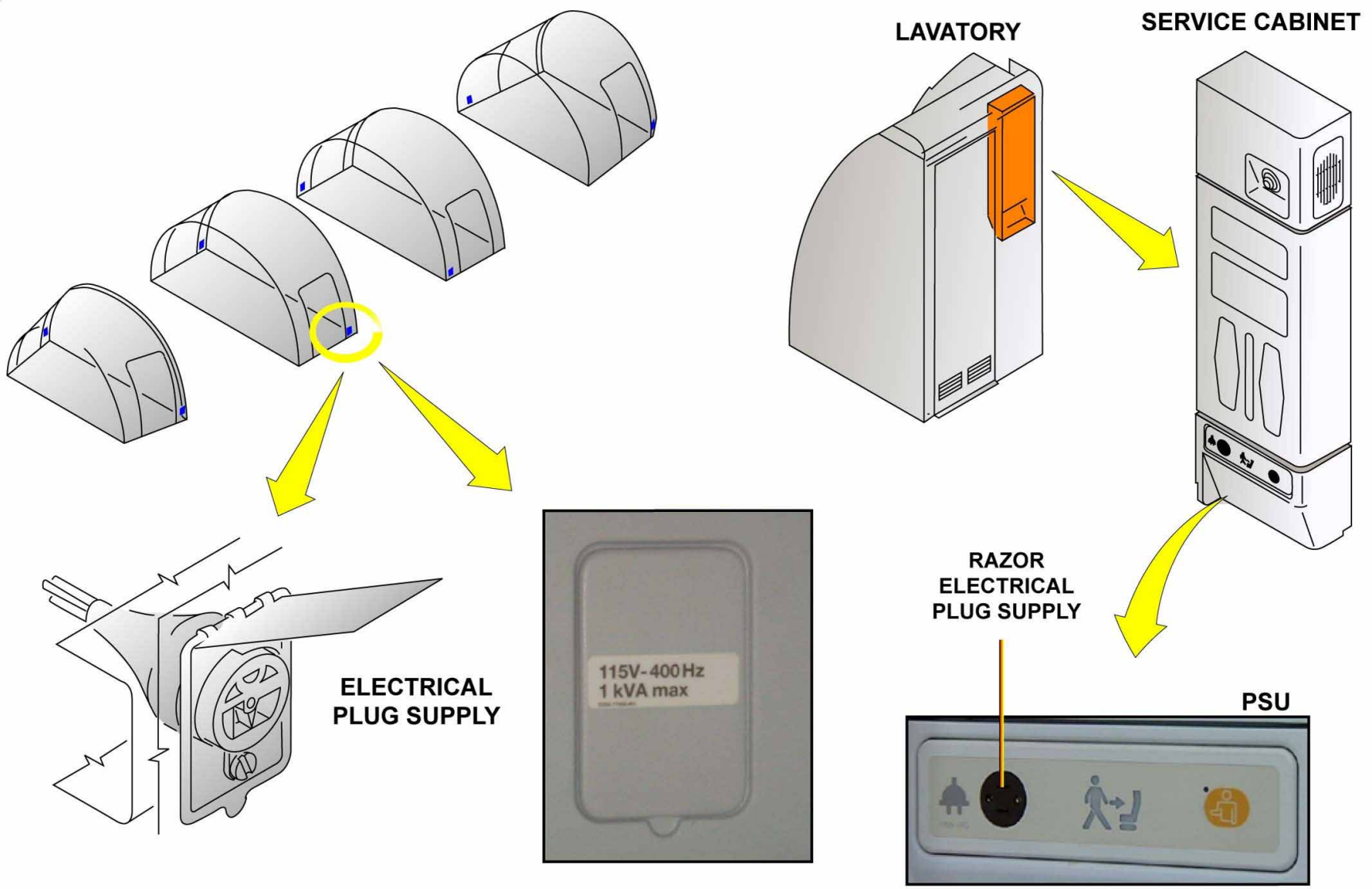

ELECTRICAL PLUG SUPPLY

G7508471 - G3NT1T0 - FM25D200000002

CREW REST COMPARTMENT D/O (3)

GENERAL

The crewmembers can rest during long flights in three compartments, the Flight Crew Rest Compartment (FCRC), the Lower Deck Mobile Crew Rest (LD-MCR) and the Bulk Crew Rest Compartment (BCRC).

NOTE: Note: All the crew rest compartments are optional and can be installed according to customer requests.

The FCRC is located in the cabin, behind the cockpit and ahead of the right FWD passenger/crew door. This is a compartment for two persons from the flight crew who can sit or lie on the installed bunks.
The LD-MCR is installed in the front part of the aft cargo compartment and it can be removed or installed when required.
The BCRC is located in the rear part of the AFT cargo compartment. It is installed for crew rest on long flights.
The crew can access the LD-MCR and the BCRC through staircase housings, which are installed in the cabin.

FLIGHT CREW REST COMPARTMENT (FCRC)

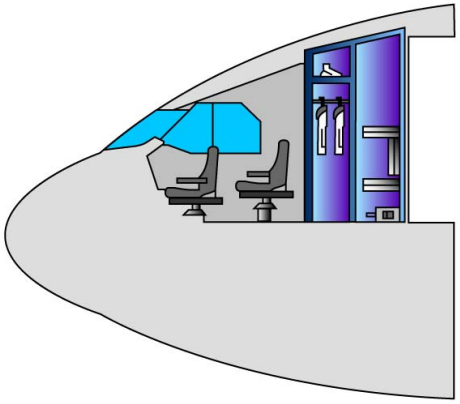

LOWER DECK MOBILE CREW REST (LD-MCR)

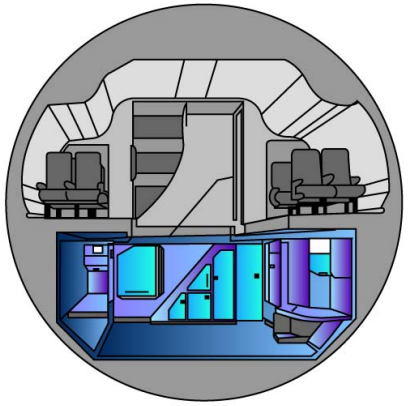

BULK CREW REST COMPARTMENT (BCRC)

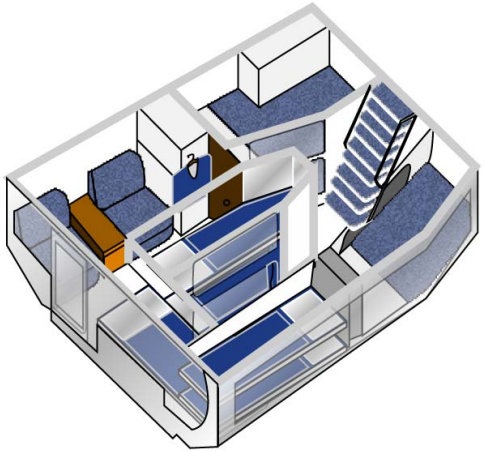

GENERAL

G7508471 - G3NT1T0 - FM25D3000000002

CREW REST COMPARTMENT D/O (3)

FLIGHT CREW REST COMPARTMENT

This topic presents the components, power supply, attachment and interfaces of the FCRC.

FCRC COMPONENTS

There are two bunks. The upper bunk can be folded to the backrest position to allow the crew to sit on the lower bunk. A belt restraint and a curtain are installed at each bunk. The crew can use a folding table if installed.
For stowage of coats, flight crew bags, bed sheets, pillows and emergency equipment there are stowage compartments.

FCRC EQUIPMENT

The FCRC is equipped with:
- a minimum of one fluorescent tube with ballast unit and a minimum of one low intensity light at the floor level,
- an EXIT sign and a minimum of one NO SMOKING/FASTEN SEAT BELT sign,
- an emergency light controlled through the cabin emergency lighting system,
- a Passenger Service Unit (PSU) above each bunk, and its individual air outlet, reading light and reading light ON/OFF switch.

The PSU can be equipped with:
- a NO SMOKING/FASTEN SEAT BELT sign,
- an audio connector, a reading light dimmer control,
- an emergency oxygen container,
- a Passenger Control Unit (PCU)
- a reading light Printed Circuit Board (PCB) to supply electrical power to the reading lights.

The Cabin Intercommunication Data System (CIDS) controls the Additional Attendant Panel (AAP), the interphone handset and the loudspeakers. A razor socket with static inverter is installed in the FCRC. The razor socket supplies power to an electric razor. A smoke detector is installed and it continuously monitors the condition of the air. Optionally, a multi-function handset with a telephone and a PCU, and a Video Display Unit (VDU) above each bunk, can be installed.

G7508471 - G3NT1T0 - FM25D300000002

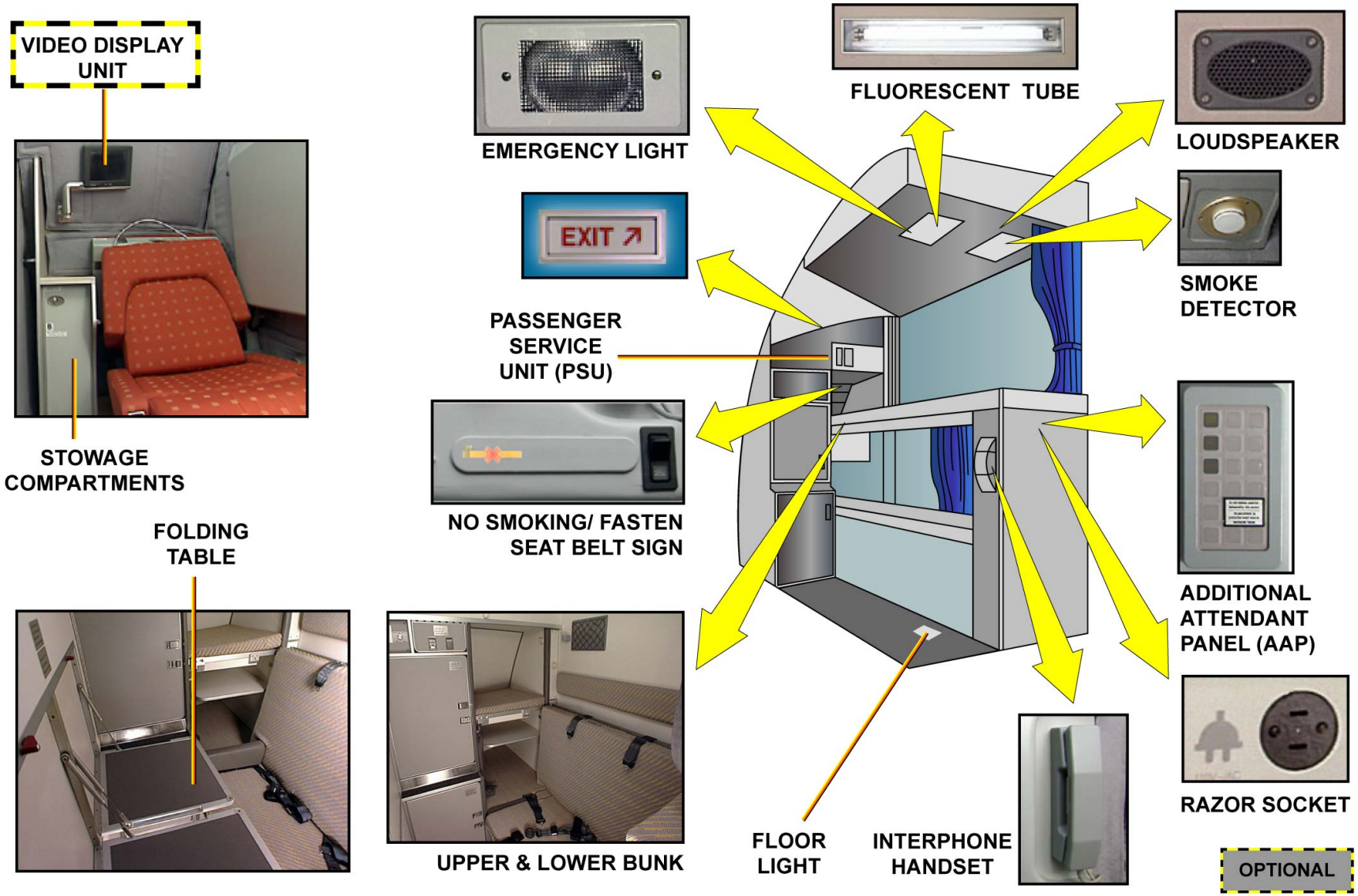

FLIGHT CREW REST COMPARTMENT - FCRC COMPONENTS & FCRC EQUIPMENT

G7508471 - G3NT1T0 - FM25D300000002

CREW REST COMPARTMENT D/O (3)

FLIGHT CREW REST COMPARTMENT (continued)

INTERFACES

The FCRC has interfaces with:
- the cabin air distribution and recirculation system,
- the CIDS,
- the individual air distribution system,
- the electrical power system,
- the auxiliary areas smoke detection system,
- the general illumination system,
- the emergency lighting system,
- the passenger oxygen system,
- the passenger attendant calls light system,
- the passenger and cabin attendant lights system.

G7508471 - G3NT1T0 - FM25D300000002

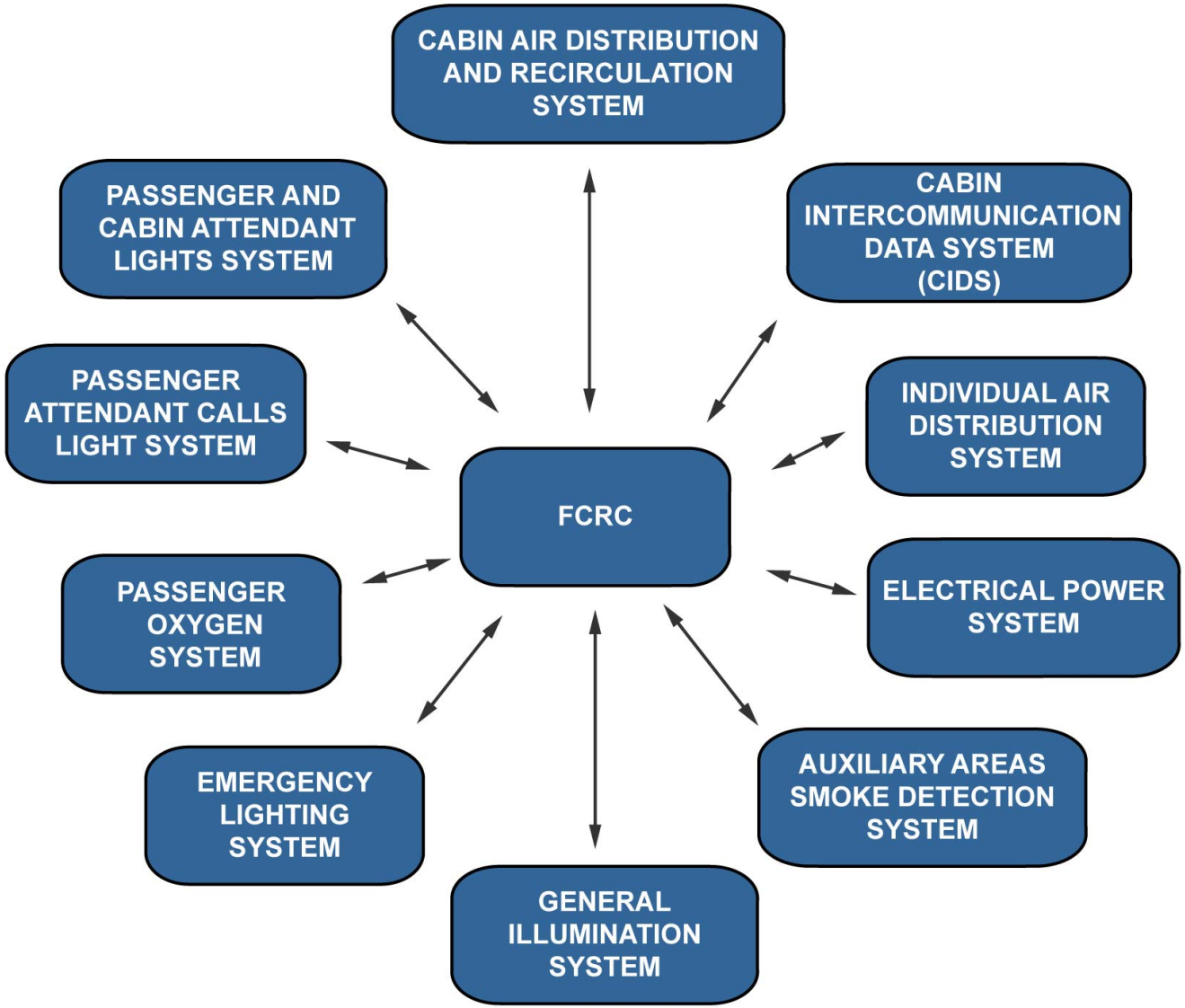

FLIGHT CREW REST COMPARTMENT - INTERFACES

G7508471 - G3NT1T0 - FM25D300000002

CREW REST COMPARTMENT D/O (3)

FLIGHT CREW REST COMPARTMENT (continued)

ATTACHMENTS

The FCRC is attached to a hard point in the cabin floor structure and to the A/C structure with tie-rods.

G7508471 - G3NT1T0 - FM25D300000002

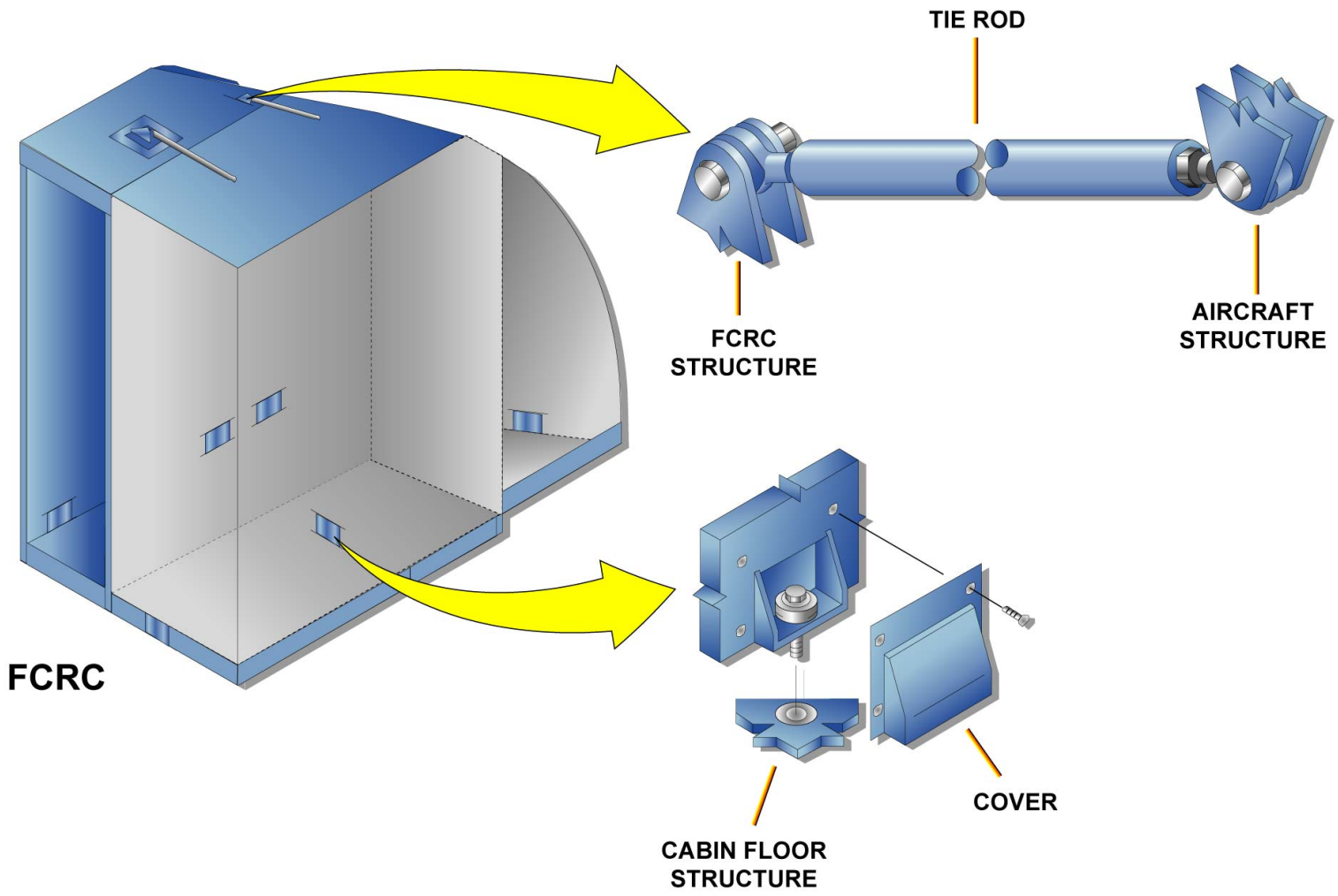

FLIGHT CREW REST COMPARTMENT - ATTACHMENTS

G7508471 - G3NT1T0 - FM25D300000002

CREW REST COMPARTMENT D/O (3)

LOWER DECK MOBILE CREW REST

The LD-MCR components, power supply, attachments and interfaces will be developed.

COMPONENTS DESCRIPTION

The LD-MCR has two types of illumination, fluorescent tube with ballast units and low intensity lights at floor level. There is an EXIT sign near the staircase and if installed NO SMOKING/FASTEN SEAT BELT signs.
There is a cabin interphone to allow communication between the LD-MCR and other attendant station. The loudspeakers are connected to the passenger address system. The CIDS controls the light through the AAP, the interphone and the loudspeakers.
Bunks are permanently installed with belt restraints for the safety of the crew. The bunks are separated by dividing walls and curtains.
At different locations there are stowage compartments. Some of them contain the emergency equipment.

G7508471 - G3NT1T0 - FM25D300000002

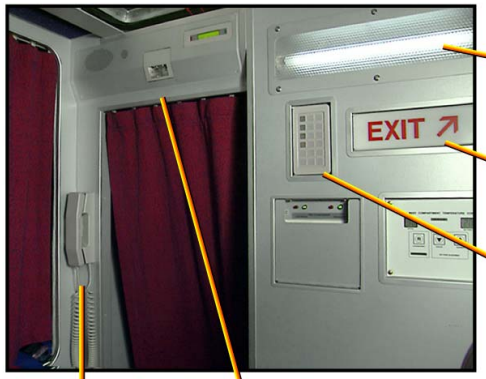

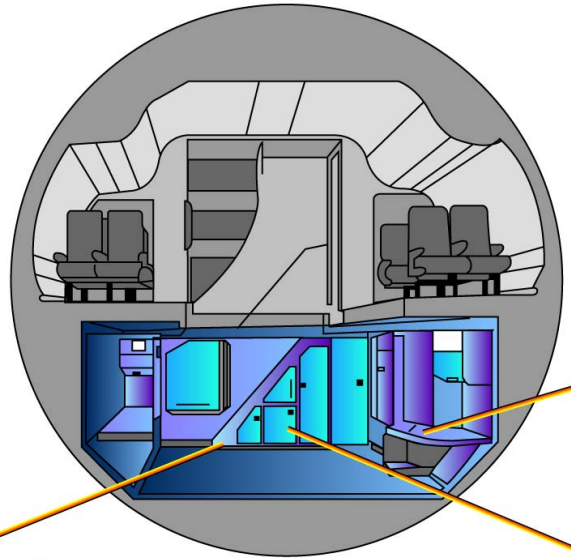

LOWER DECK MOBILE CREW REST - COMPONENTS DESCRIPTION

G7508471 - G3NT1T0 - FM25D300000002

CREW REST COMPARTMENT D/O (3)

LOWER DECK MOBILE CREW REST (continued)

INTERFACES

The LD-MCR has interfaces with:
- the cabin air distribution and recirculation system,
- the CIDS,
- the electrical power system,
- the lower deck Cargo Loading System (CLS),
- the auxiliary-areas smoke detection system,
- the auxiliary-areas fire extinguishing system,
- the Landing Gear Control and Interface Unit (LGCIU),
- the general illumination system,
- the emergency lighting system,
- the passenger oxygen system.

G7508471 - G3NT1T0 - FM25D300000002

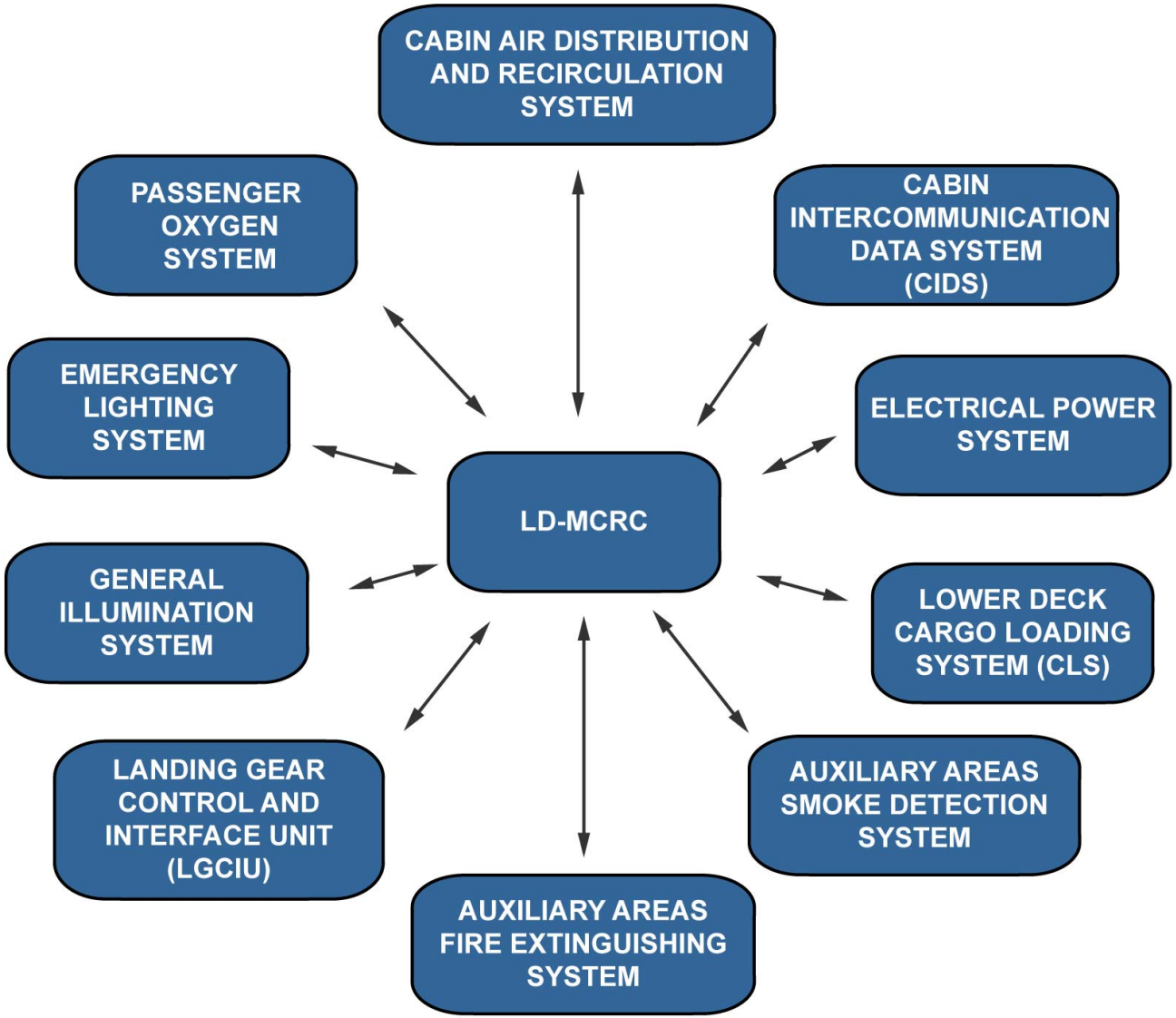

LOWER DECK MOBILE CREW REST - INTERFACES

G7508471 - G3NT1T0 - FM25D300000002

CREW REST COMPARTMENT D/O (3)

LOWER DECK MOBILE CREW REST (continued)

SYSTEM INTERFACE COMPARTMENT

The systems interface compartment is located in the lower right side of the LD-MCR.
The compartment contains the air-conditioning connector and the electrical systems connectors. Each interface connector has a parking position installed in the compartment. An additional electrical systems / power supply connector is located in the upper front right side of the LD-MCR.

G7508471 - G3NT1T0 - FM25D300000002

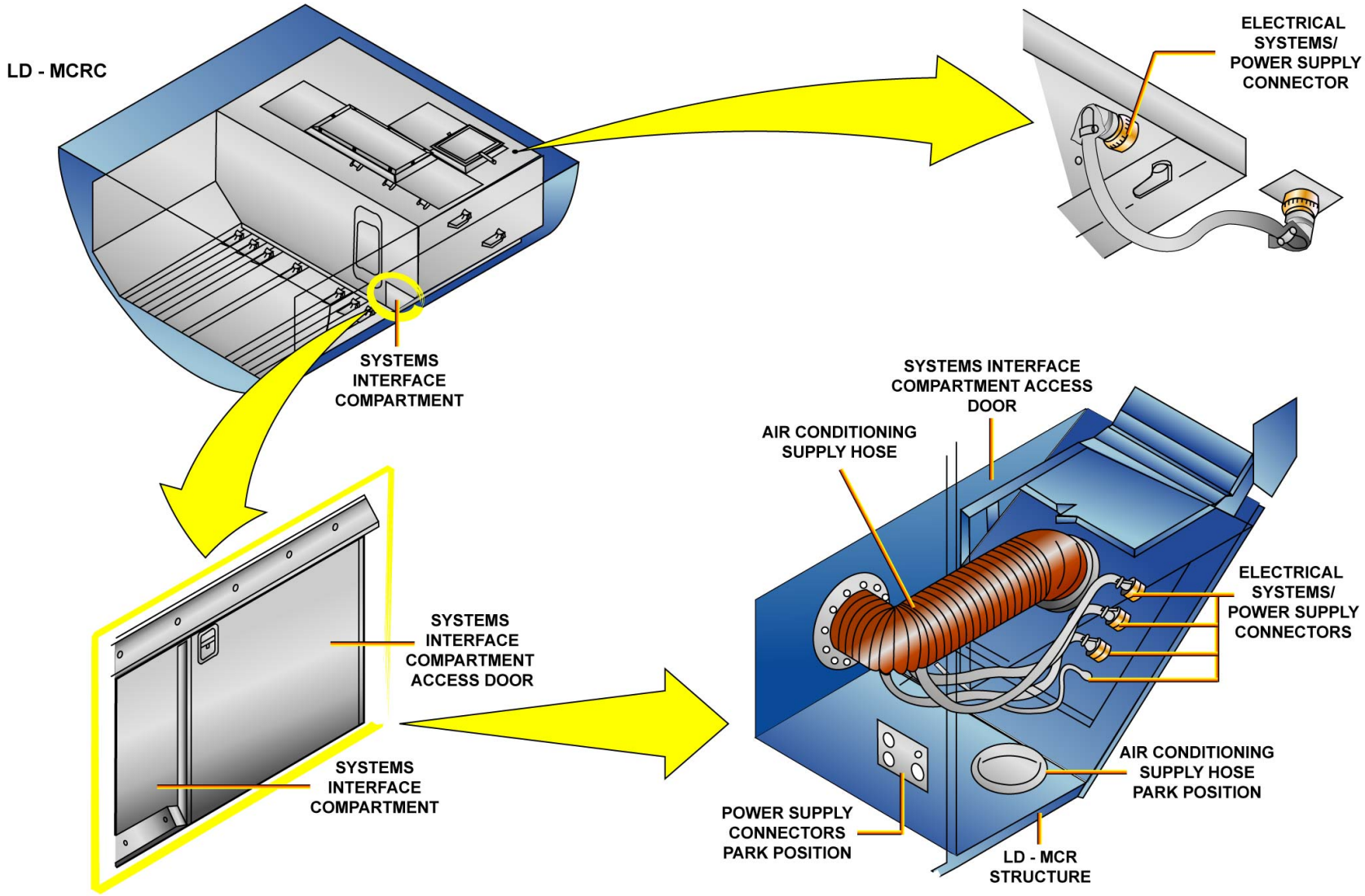

LOWER DECK MOBILE CREW REST - SYSTEM INTERFACE COMPARTMENT

G7508471 - G3NT1T0 - FM25D300000002

CREW REST COMPARTMENT D/O (3)

LOWER DECK MOBILE CREW REST (continued)

ATTACHMENT

When the LD-MCR is installed, it is held in its position with:
- the XZ latches at the FWD end,
- the YZ latches at the left and right hand sides,
- the retractable XZ double latches at the aft end.

The LD-MCR is operated as a classical cargo container (loading, locking, unlocking and unloading) and has also the same shape (dimensions).

LOWER DECK-CREW REST COMPARTMENT

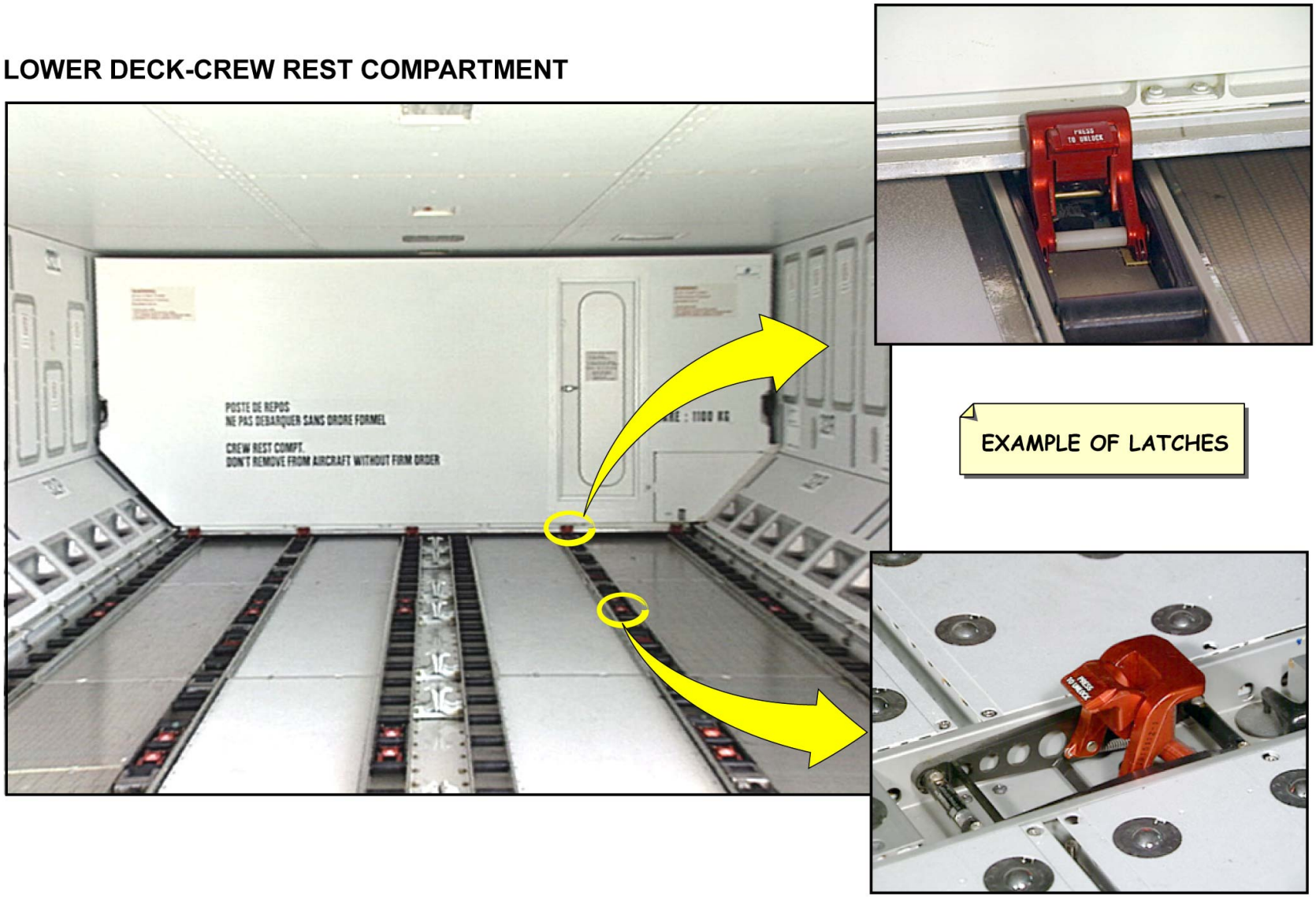

LOWER DECK MOBILE CREW REST - ATTACHMENT

CREW REST COMPARTMENT D/O (3)

LOWER DECK MOBILE CREW REST (continued)

LD-MCR STAIRCASE HOUSING

The staircase housing is the compartment giving access to the LD-MCR when it is installed. A stowage compartment is installed in the staircase housing opposite the access door.
Electrical power to the staircase housing is supplied through the A/C interface connectors.
The staircase housing case is attached:
- to the seat tracks,
- with tie-rods from the upper attachments to the A/C structure,
- to a hard point in the cabin floor structure if necessary.

G7508471 - G3NT1T0 - FM25D300000002

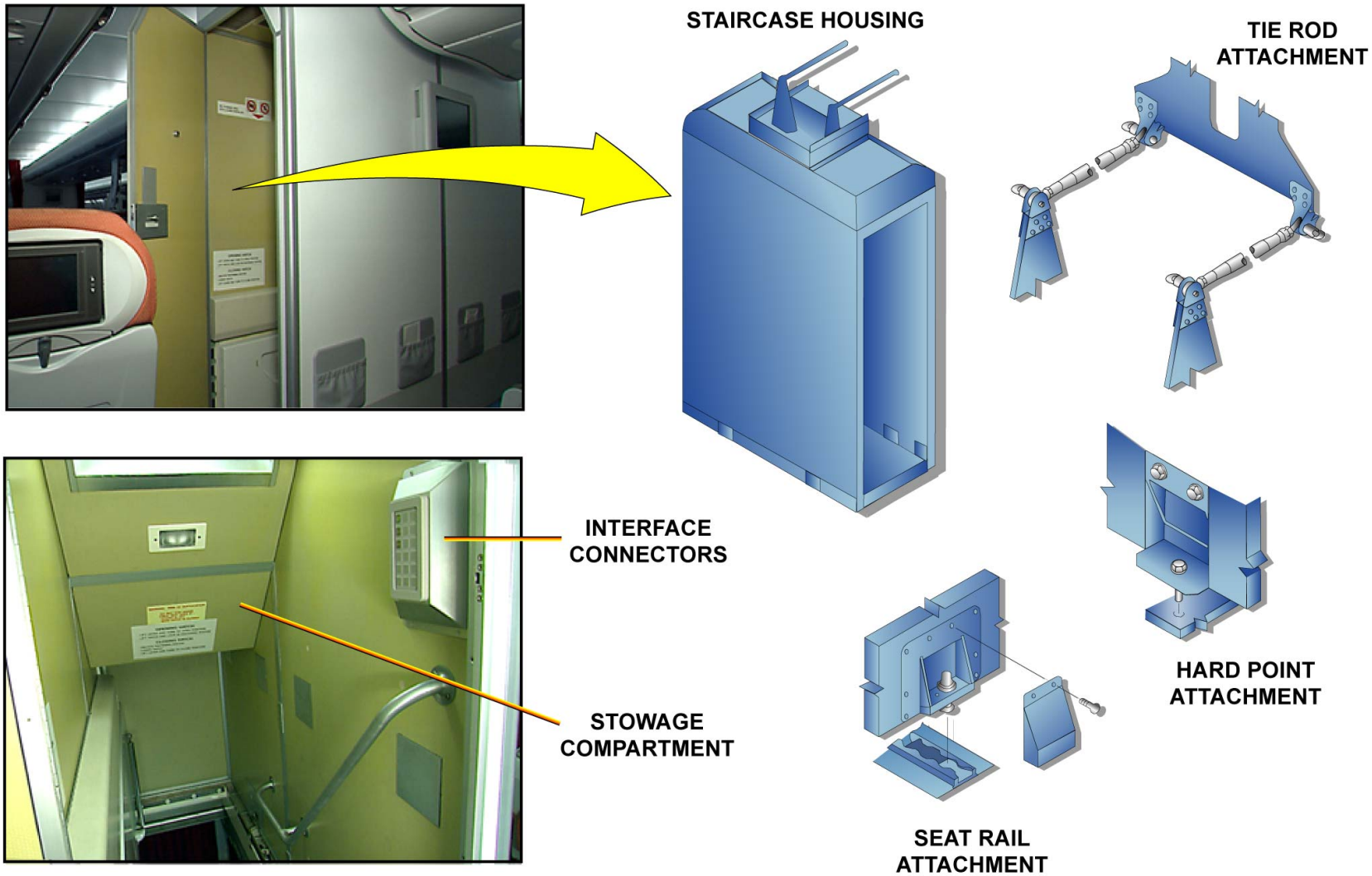

LOWER DECK MOBILE CREW REST - LD-MCR STAIRCASE HOUSING

CREW REST COMPARTMENT D/O (3)

BULK CREW REST COMPARTMENT (BCRC)

This topic introduces the system description, power supply, interfaces and attachments of the BCRC.

SYSTEM DESCRIPTION

The BCRC is a permanent installation made of sub Assembles/units and a cargo frame. It is installed on shock-mounts, which are attached to the A/C structure. Tie-rods are attached to the BCRC and the A/C structure and hold the BCRC in position.
The BCRC has insulation protection from cold air temperature and to decrease the noise level.

G7508471 - G3NT1T0 - FM25D300000002

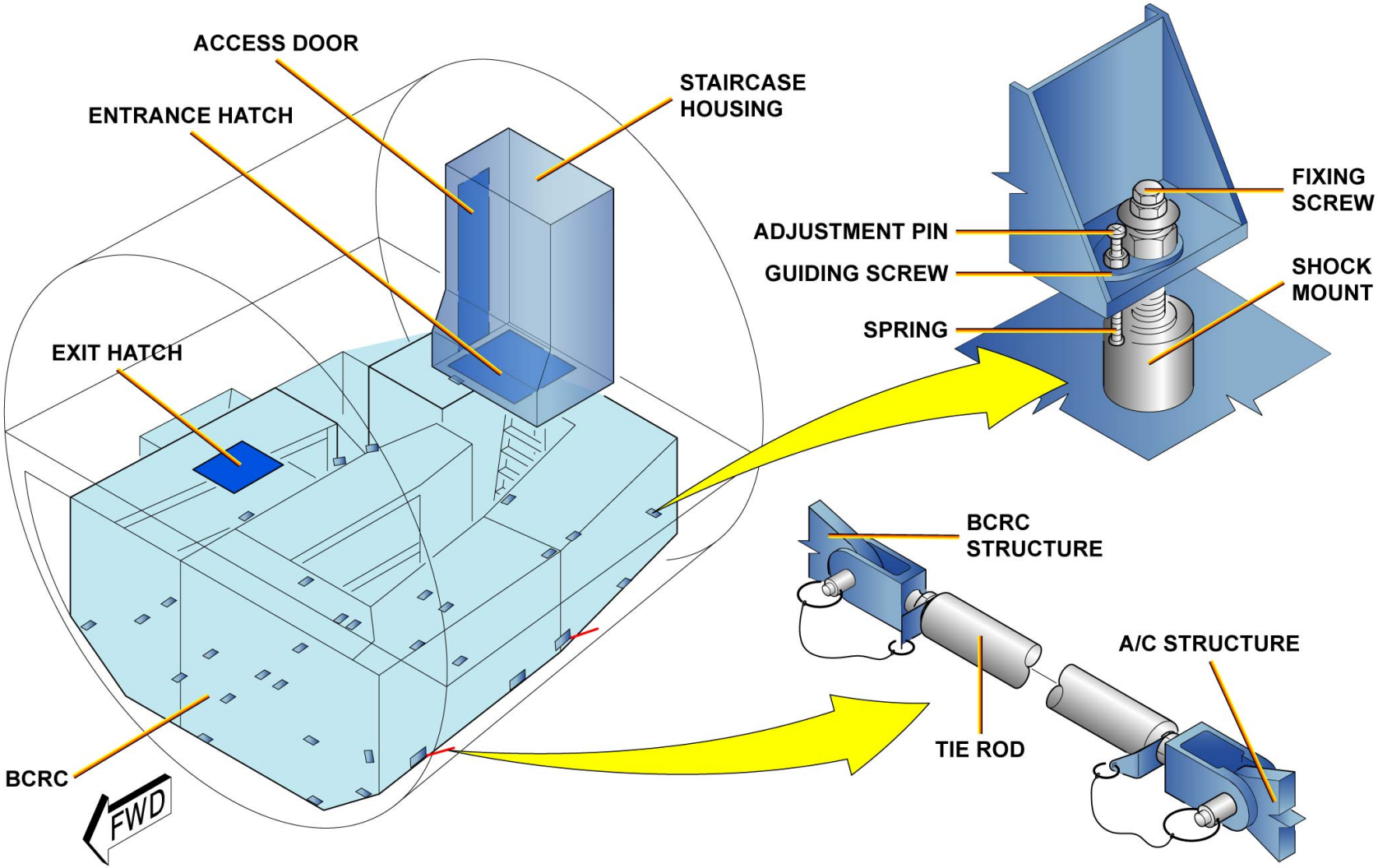

BULK CREW REST COMPARTMENT (BCRC) - SYSTEM DESCRIPTION

CREW REST COMPARTMENT D/O (3)

BULK CREW REST COMPARTMENT (BCRC) (continued)

INTERFACES

The BCRC has interfaces with:
-the cabin air distribution and recirculation system,
-the Cabin Intercommunication Data System (CIDS),
-the electrical power system,
-the auxiliary-areas smoke detection system,
-the auxiliary-areas fire extinguishing system,
-the general light system,
-the emergency lighting system,
-the passenger oxygen system.

G7508471 - G3NT1T0 - FM25D300000002

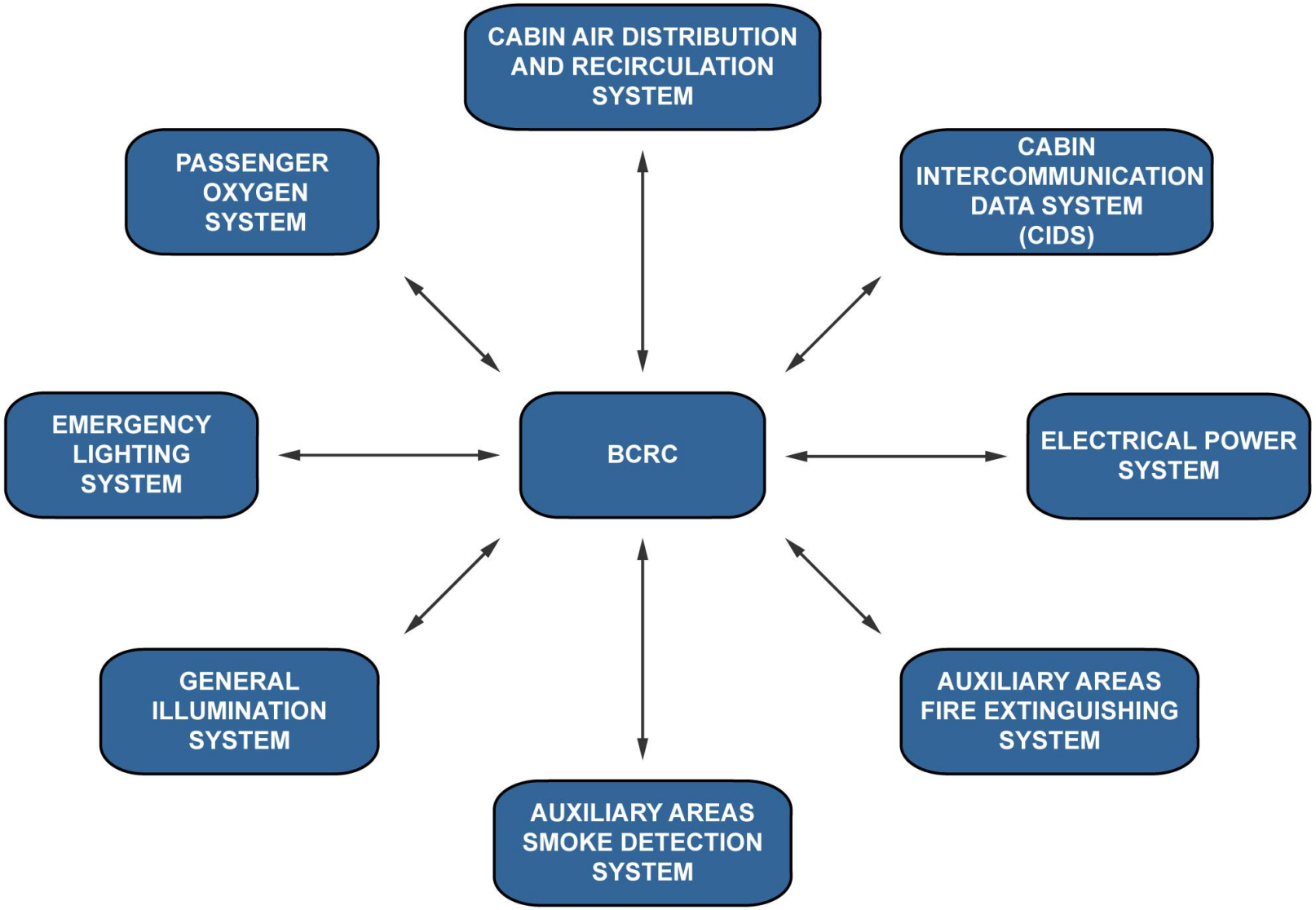

BULK CREW REST COMPARTMENT (BCRC) - INTERFACES

G7508471 - G3NT1T0 - FM25D300000002

CREW REST COMPARTMENT D/O (3)

BULK CREW REST COMPARTMENT (BCRC) (continued)

BCRC STAIRCASE HOUSING

The staircase housing is installed in the cabin Z260 above the BCRC and the BCRC entrance hatch.
The staircase housing is attached:
-to the seat tracks,
-with tie-rods from the upper attachments to the A/C or galley structure,
-to hard points in the cabin floor structure.

G7508471 - G3NT1T0 - FM25D300000002

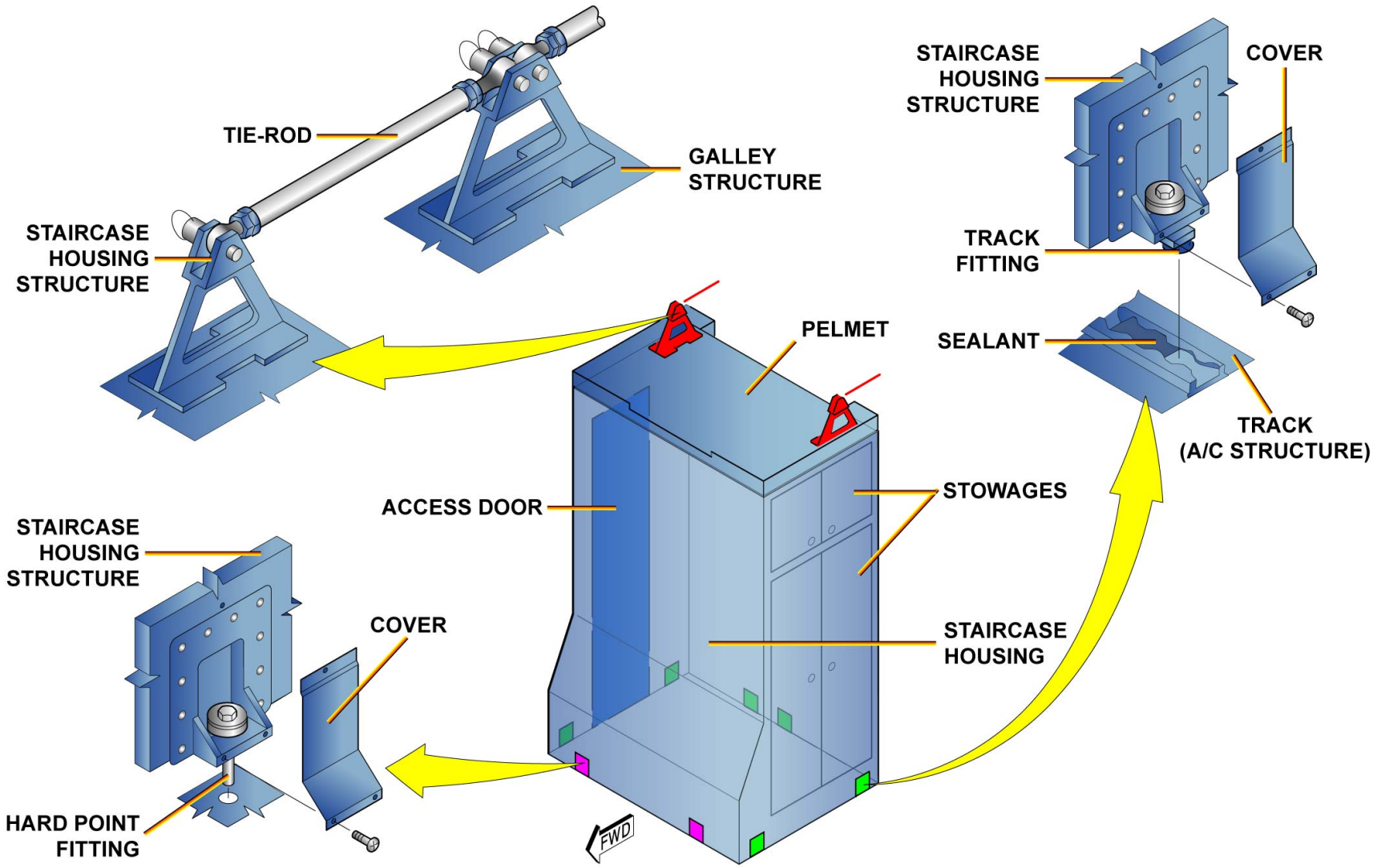

BULK CREW REST COMPARTMENT (BCRC) - BCRC STAIRCASE HOUSING

G7508471 - G3NT1T0 - FM25D300000002

CREW REST COMPARTMENT D/O (3)

BULK CREW REST COMPARTMENT (BCRC) (continued)

EMERGENCY EXIT HATCH

An emergency exit hatch is installed in the cabin z260. It can be opened from inside the BCRC and from the cabin when the floor covering is lifted. The emergency exit hatch lets persons leave the BCRC when the staircase is blocked.

G7508471 - G3NT1T0 - FM25D300000002

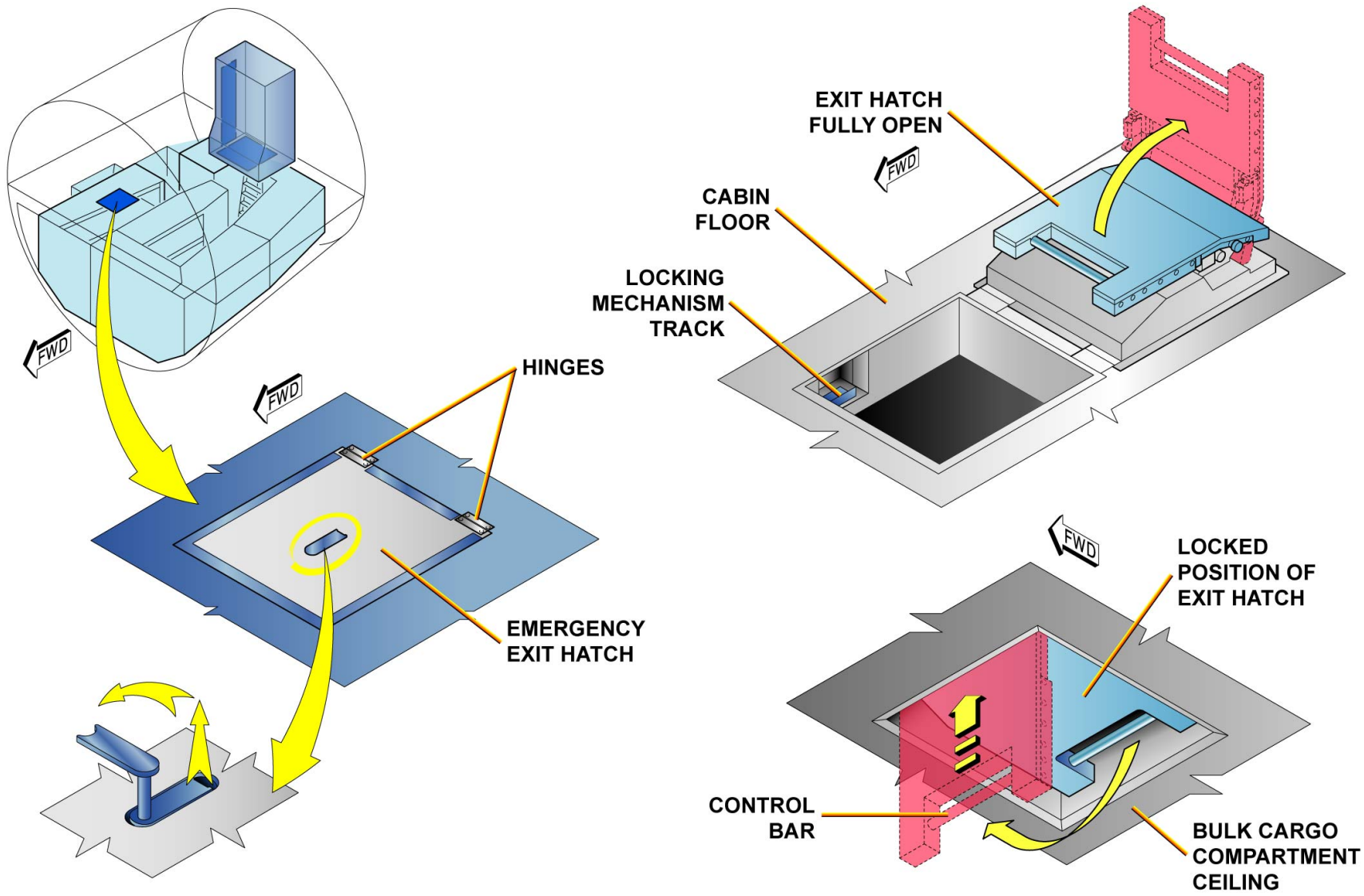

BULK CREW REST COMPARTMENT (BCRC) - EMERGENCY EXIT HATCH

G7508471 - G3NT1T0 - FM25D300000002

CREW REST COMPARTMENT D/O (3)

AIR CONDITIONING SYSTEM/EMERGENCY OXYGEN

The cabin air distribution and recirculation system supplies air conditioning to the FCRC and the LD-MCR. In each rest room there are a heater, a temperature controller, a temperature selector and individual air outlets.
Emergency oxygen containers are installed in different locations in both crew rest compartments.

G7508471 - G3NT1T0 - FM25D300000002

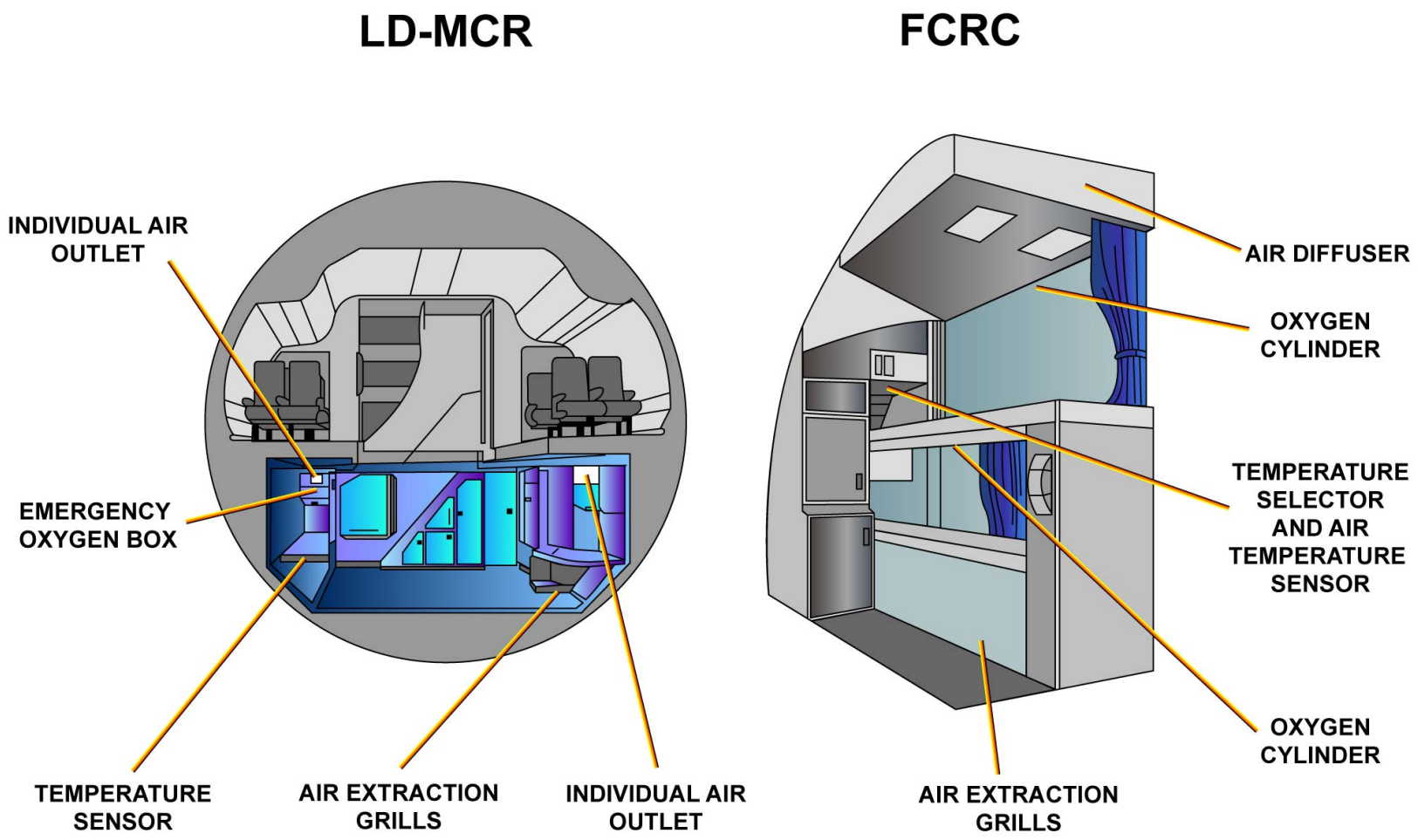

AIR CONDITIONING SYSTEM/EMERGENCY OXYGEN

G7508471 - G3NT1T0 - FM25D300000002

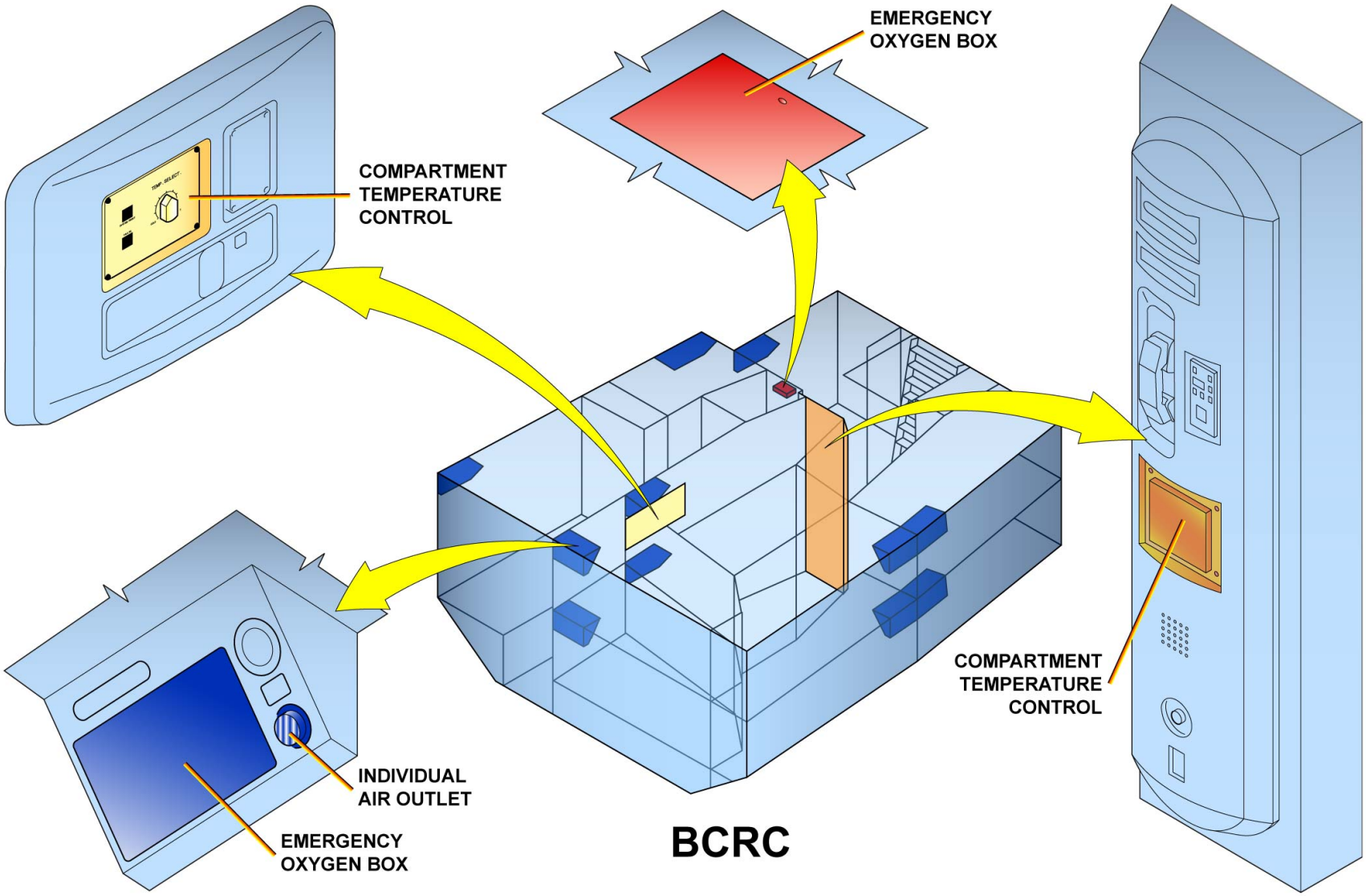

AIR CONDITIONING SYSTEM/EMERGENCY OXYGEN

This Page Intentionally Left Blank

G7508471 - G3NT1T0 - FM25D300000002

GALLEY TROLLEY COMPARTMENT COOLING SYSTEM D/O (3)

PRESENTATION

Each air chiller system is composed of:
- the air chiller unit,
- the water drain,
- the condenser discharge duct,
- the chilled air in and out ducting.

The air chiller system keeps food and drinks (that are stored in the trolley) cold. The air chiller units are available with different cooling capacities.

G7508471 - G3NT1T0 - FM25D7000000003

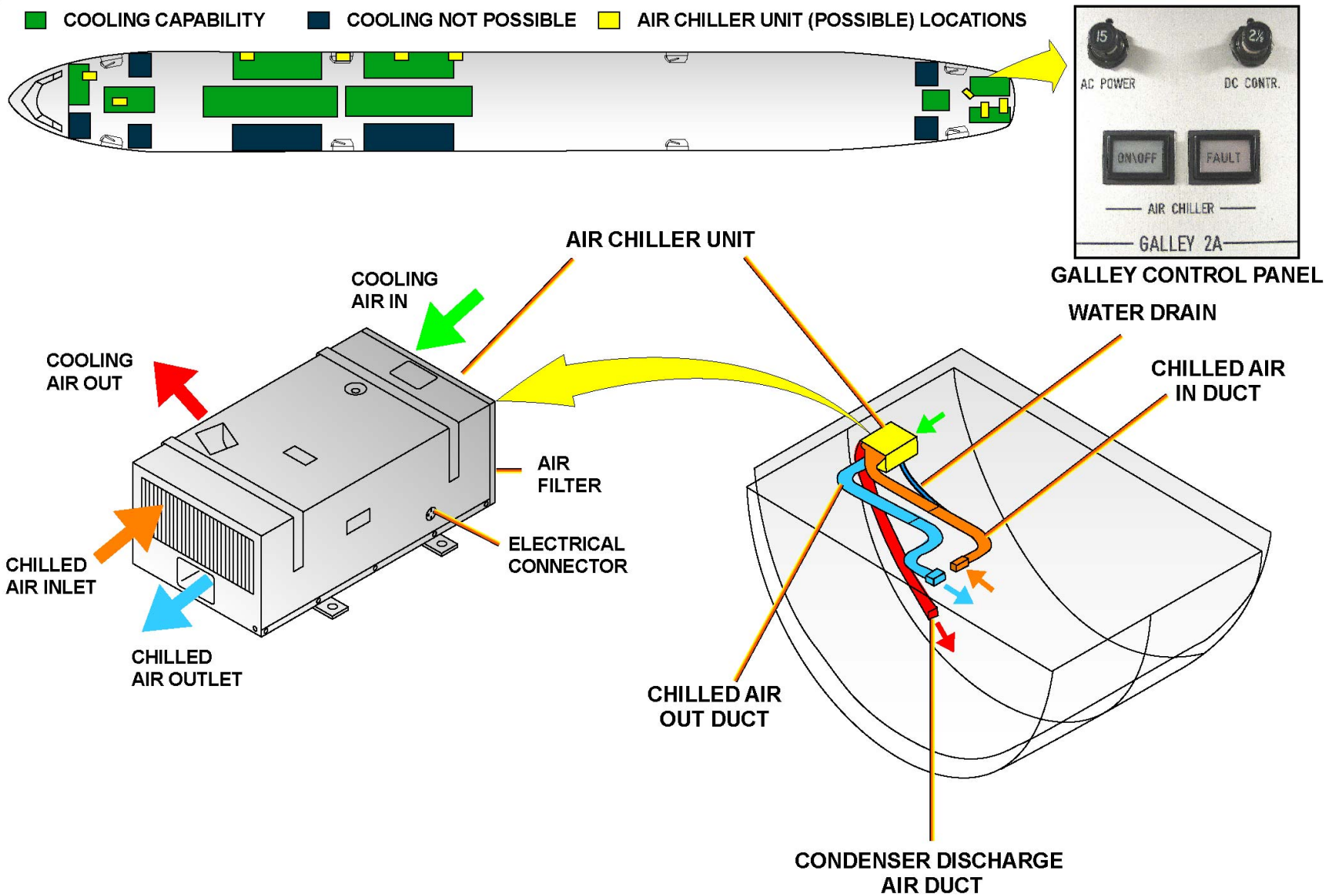

PRESENTATION

G7508471 - G3NT1T0 - FM25D700000003

GALLEY TROLLEY COMPARTMENT COOLING SYSTEM D/O (3)

GENERAL DESCRIPTION

The air chiller units supply chilled air to cool down the trolley compartment in the connected galleys. Each air chiller unit is connected to one galley only and operates independently. The chilled air is supplied to the galley through insulated ducts. The air returning from the galley is passed through an evaporator, chilled and return to the galley in a closed loop. The condenser discharge duct blows the cooling air out of the air chiller unit. The drain water of the air chiller unit drains into the aircraft bilge drainage system or the waste-water drain system of the galley.

G7508471 - G3NT1T0 - FM25D7000000003

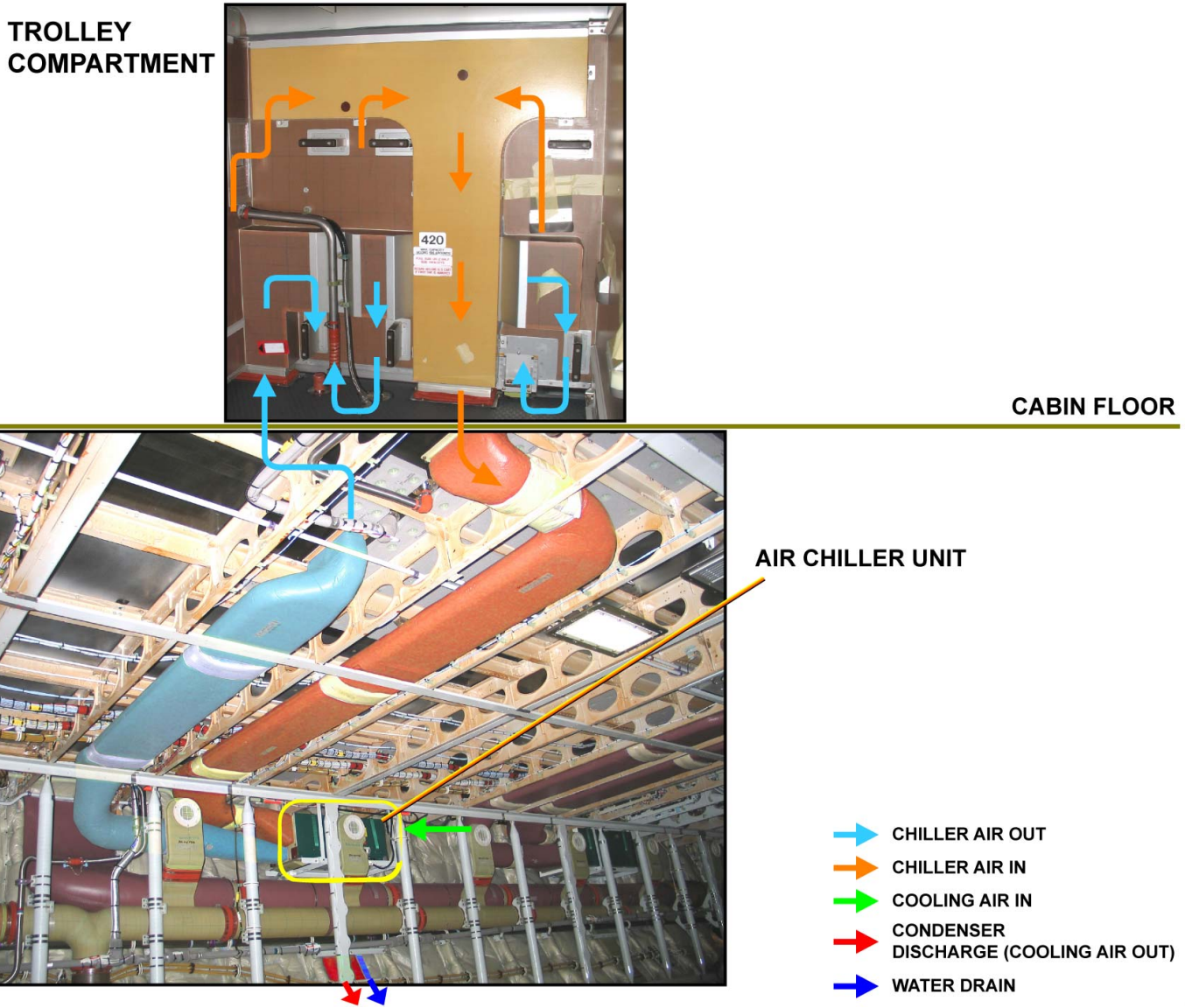

GENERAL DESCRIPTION

G7508471 - G3NT1T0 - FM25D700000003

GALLEY TROLLEY COMPARTMENT COOLING SYSTEM D/O (3)

ELECTRICAL CONTROL

ELECTRICAL POWER

The air chiller unit is supplied by two external electrical power supply sources connected to a single receptacle: permanently connected 115V AC 3 phases supply and externally switched 28V DC.

NORMAL OPERATION

A controller adjusts the chilled air out temperature by electronically controlling a heater (that is wrapped around the thermal expansion valve) to maintain the chilled air out temperature at -1°C/30°F. The evaporator, refrigerant and chilled air out temperature sensors give feedback signals to the controller.
A defrost control circuit will melt ice that has formed on the evaporator. The defrost function is activated when ice blockage causes the evaporator temperature to drop below a preset temperature.

PROTECTIONS

The air chiller automatically shutdowns, the ON light on the galley control panel goes off and the fault light comes on in case of persistent:
- refrigerant LP (leak),
- refrigerant overpressure,
- fan motor overheat,
- compressor overheat.

A reset is done with the ON/OFF SW on the galley control panel.
NOTE: The protections can be cause by very hot ambient air temperature, loss of proper cooling air circulation (dirty filter) or incorrect electrical phase connections.

G7508471 - G3NT1T0 - FM25D700000003

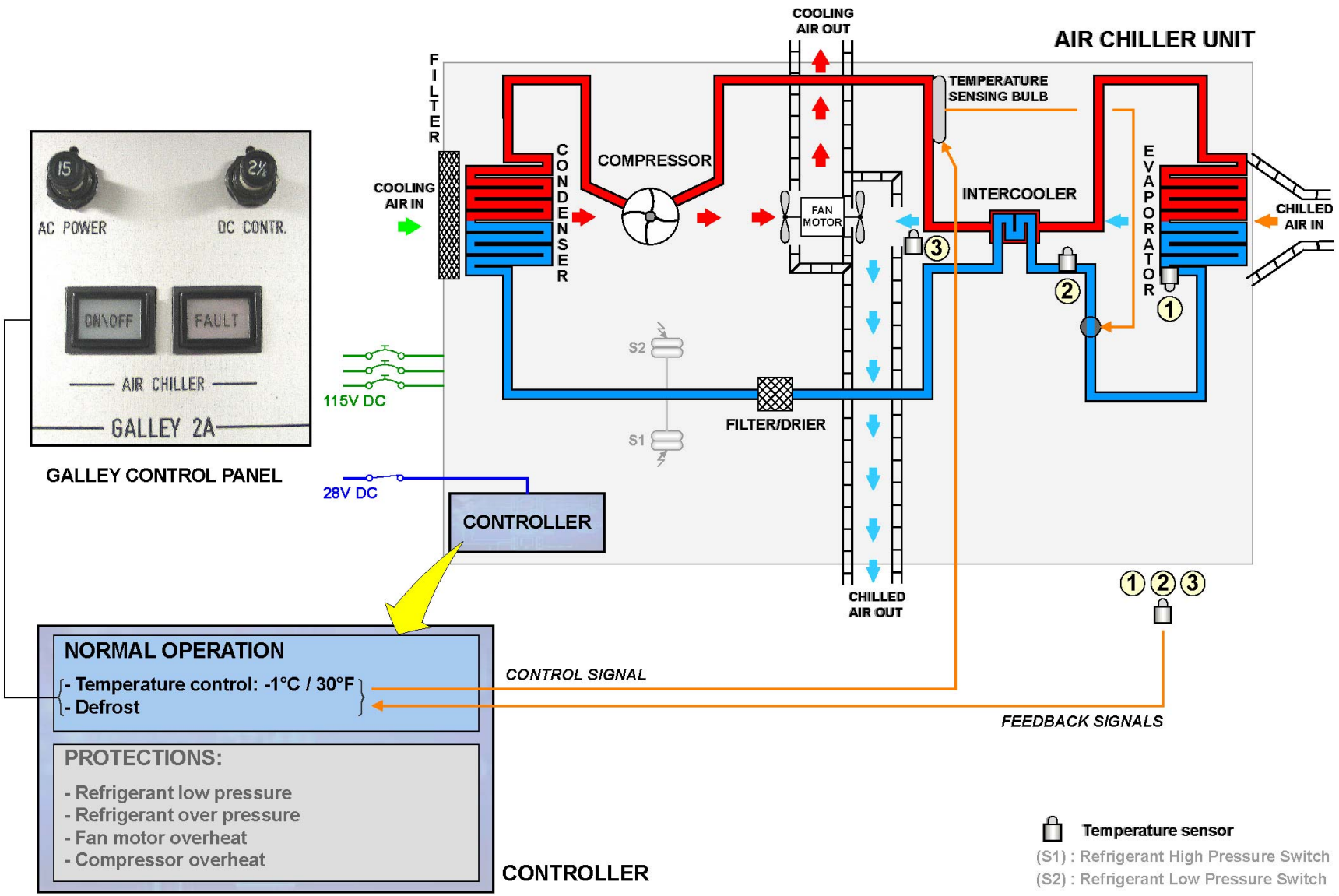

ELECTRICAL CONTROL - ELECTRICAL POWER ... PROTECTIONS

G7508471 - G3NT1T0 - FM25D700000003

EMERGENCY EQUIPMENT COCKPIT D/O (3)

ESCAPE ROPE

This topic describes the emergency escape from the cockpit using the escape rope that is located above each sliding window.

G7508471 - G3NT1T0 - FM25D4F25BF0102

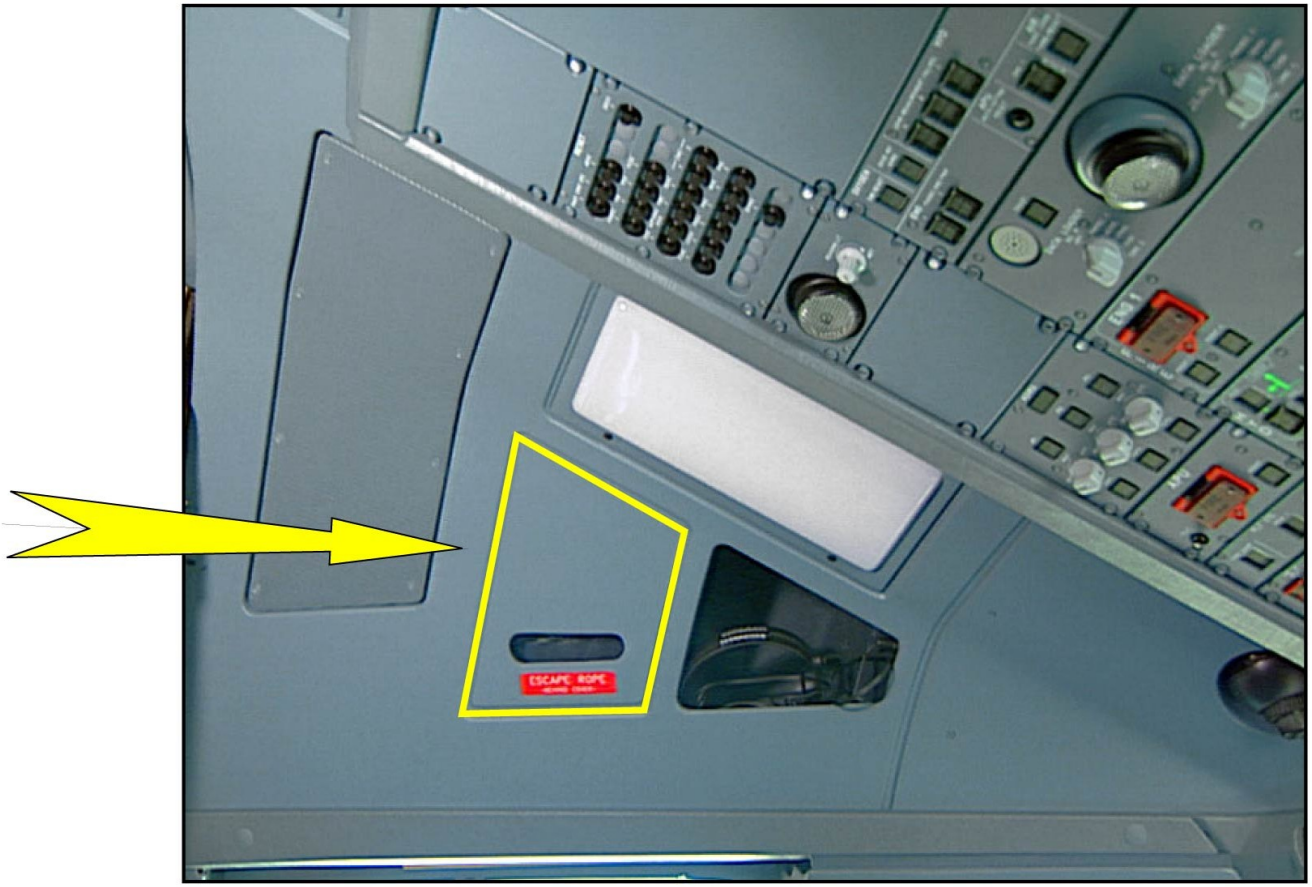

ESCAPE ROPE LOCATION

ESCAPE ROPE

G7508471 - G3NT1T0 - FM25D4F25BF0102

EMERGENCY EQUIPMENT COCKPIT D/O (3)

ESCAPE ROPE (continued)

COMPONENT DESCRIPTION

If an emergency occurs on ground, the cockpit crew can use descent devices to leave the cockpit. When the cabin is not pressurized, each sliding window can be opened, using a control handle, which is located FWD of the sliding window. The windshield panels are provided with an open-position locking system.
A 6.7 m. (22 feet) long knotted rope is located in a stowage compartment above each sliding window. These stowage compartments are marked by red labels. The ropes and their attachments can support a load of 900 kg.

G7508471 - G3NT1T0 - FM25D4F25BF0102

ESCAPE ROPE - COMPONENT DESCRIPTION

G7508471 - G3NT1T0 - FM25D4F25BF0102

EMERGENCY EQUIPMENT COCKPIT D/O (3)

ESCAPE ROPE (continued)

REMOVAL/INSTALLATION

To remove:
- get access to the attachment ring,
- remove the screws from the ring,
- remove the rope.

To install:
- engage the loop of the rope in the ring,
- install the ring,
- put the rope in stowage,
- put the A/C back in its initial configuration.

G7508471 - G3NT1T0 - FM25D4F25BF0102

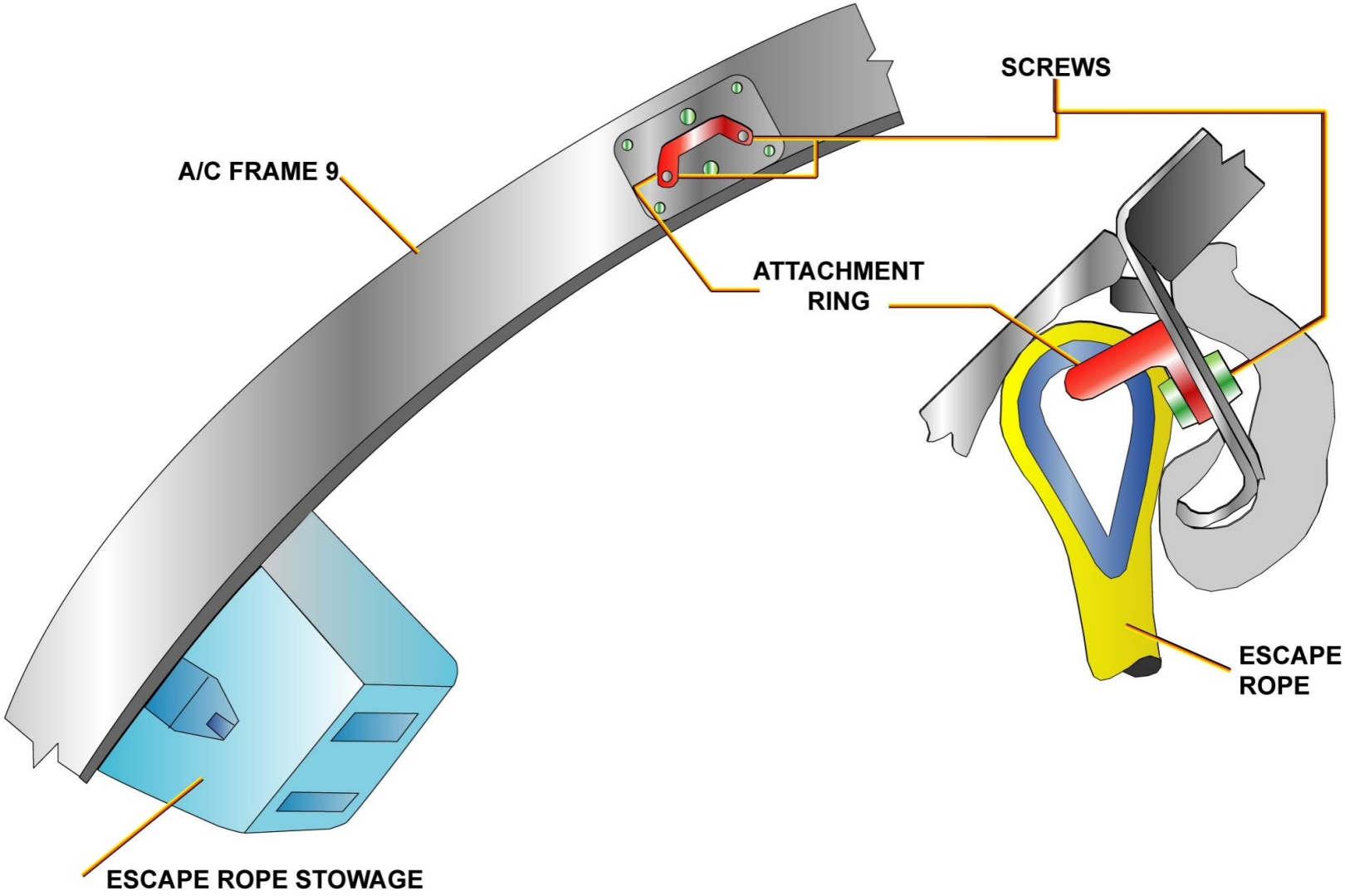

ESCAPE ROPE - REMOVAL/INSTALLATION

G7508471 - G3NT1T0 - FM25D4F25BF0102

EMERGENCY EQUIPMENT CABIN D/O

CABIN ESCAPE FACILITIES

The cabin escape facilities are installed at all the A/C exits. They allow quick evacuation for the passengers and the crew in case of emergency.

G7508471 - G3NT1T0 - FM25D500000002

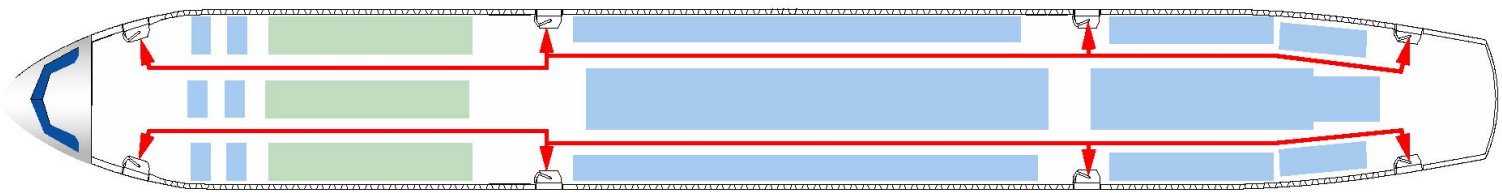

ESCAPE FACILITIES
LOCATION

CABIN ESCAPE FACILITIES

G7508471 - G3NT1T0 - FM25D500000002

EMERGENCY EQUIPMENT CABIN D/O

FLOATATION AND SURVIVAL EQUIPMENT

The floatation and survival equipment consists of the slide/rafts and the life vests.

G7508471 - G3NT1T0 - FM25D500000002

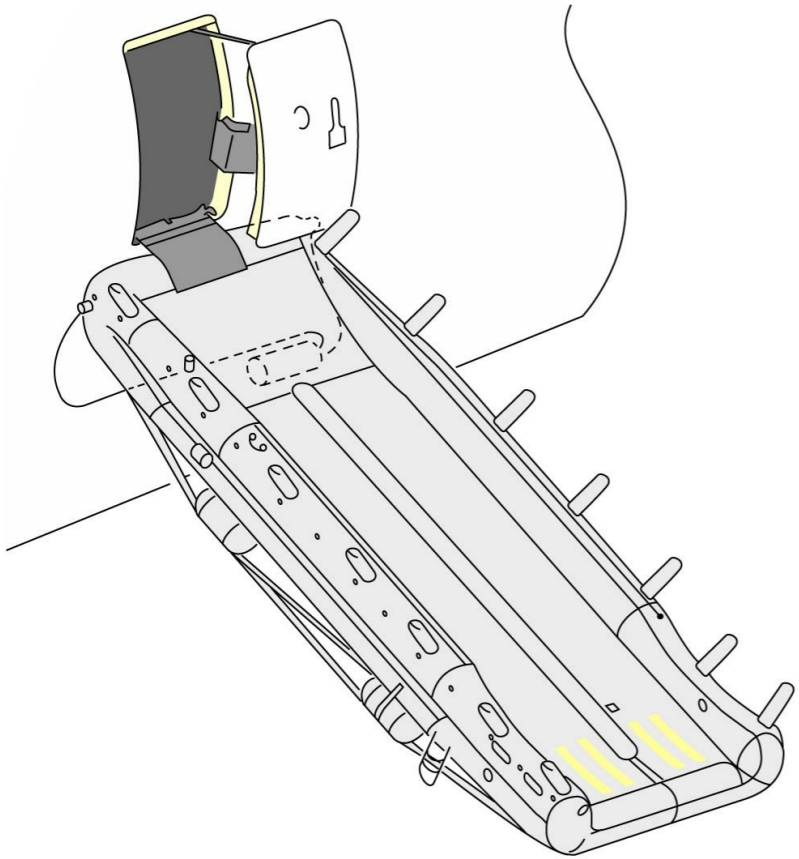

SLIDE/RAFTS

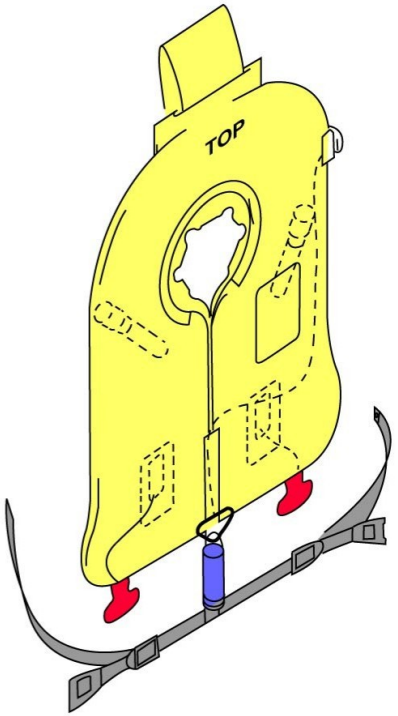

LIFE VEST

FLOATATION AND SURVIVAL EQUIPMENT

EMERGENCY EQUIPMENT CABIN D/O

FLOATATION AND SURVIVAL EQUIPMENT (continued)

LIFE VESTS

The life vests are kept below the passenger seats and in the cabin attendant seats. The life vests have buoyancy chambers with straps, clips for attachment and adjustable buckles. Each life vest also has:
- two carbon-dioxide inflator cartridges with handles to fire them,
- two secondary oral inflators,
- a water-activatable light,
- a battery.

G7508471 - G3NT1T0 - FM25D500000002

CABIN PASSENGER SEAT

CABIN ATTENDANT SEAT

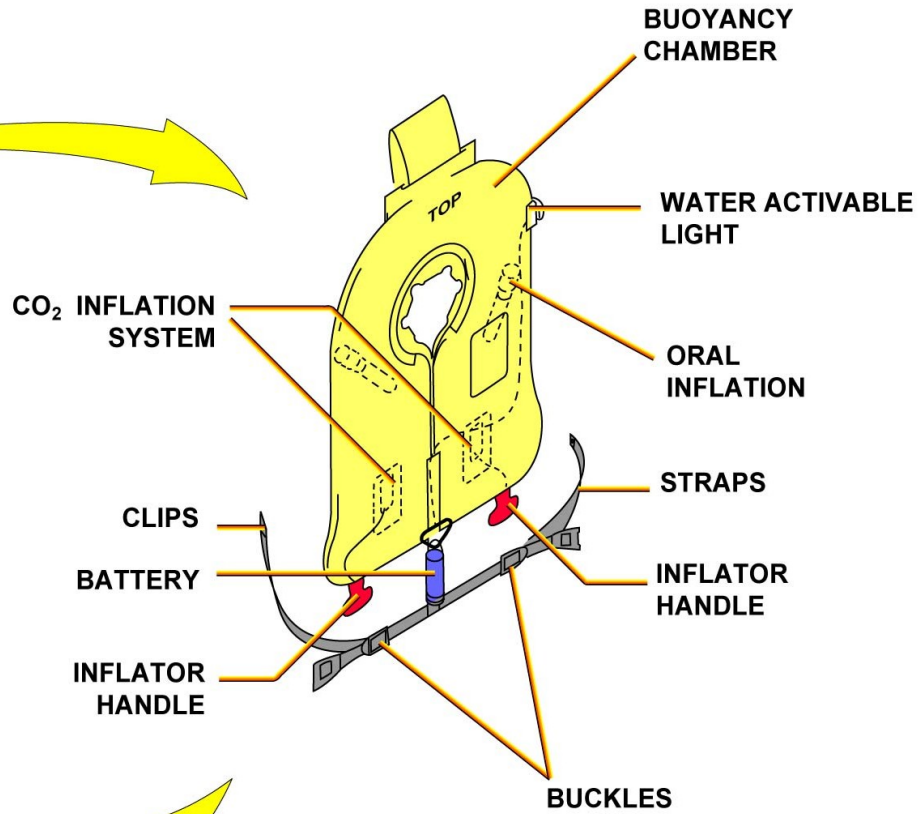

LIFE VEST

FLOATATION AND SURVIVAL EQUIPMENT - LIFE VESTS

EMERGENCY EQUIPMENT CABIN D/O

FLOATATION AND SURVIVAL EQUIPMENT (continued)

SLIDE/RAFTS LOCATION

The slide/rafts are installed on each passenger/crew door and the emergency exit doors. The slide/rafts are a combination of an escape slide and a life raft, except for the emergency exit doors 3 type I where there are just slides. The slide rafts inflate automatically when the door is opened in the emergency mode.

G7508471 - G3NT1T0 - FM25D500000002

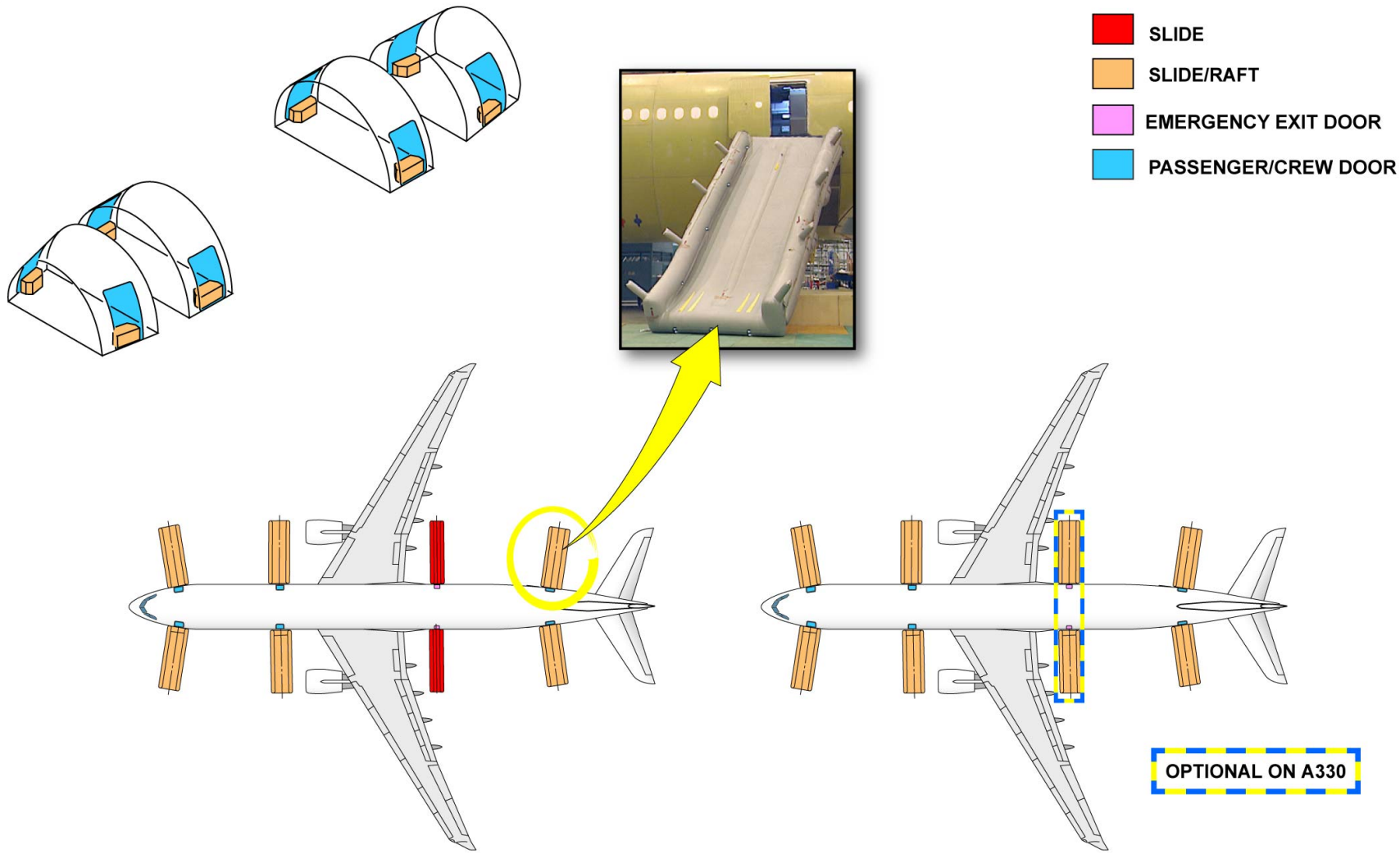

A330 EXAMPLE

A330-200/300, A340-300/500
SLIDE/RAFT LOCATION

FLOATATION AND SURVIVAL EQUIPMENT - SLIDE/RAFTS LOCATION

EMERGENCY EQUIPMENT CABIN D/O

FLOATATION AND SURVIVAL EQUIPMENT (continued)

SLIDE/RAFTS DESCRIPTION

The inflatable chambers are made of heat reflecting coated fabric tubes. The slide/raft has upper and lower structurally connected tube assemblies. The center tube is also a lane divider. The sliding surfaces of the lanes are not inflated. Pressure relief valves and deceleration strips are found at the bottom of the raft. The lighting system has directional guidance lights, which are installed on each slide/raft. They are attached to the upper longitudinal tubes and across the bottom of the slide/raft. The lights come on automatically when the slide/raft inflation starts. The packed slide/raft is installed on the packboard shell. When the door is in the ARMED mode, the girt bar is attached to the door frame structure. When the door is in DISARMED mode, the girt bar is attached to the door structure. A rope can be attached on a ring in order to lower an inflated slide. A disconnection handle located behind the girt assembly can be used to detach an inflated slide from the aircraft.

G7508471 - G3NT1T0 - FM25D500000002

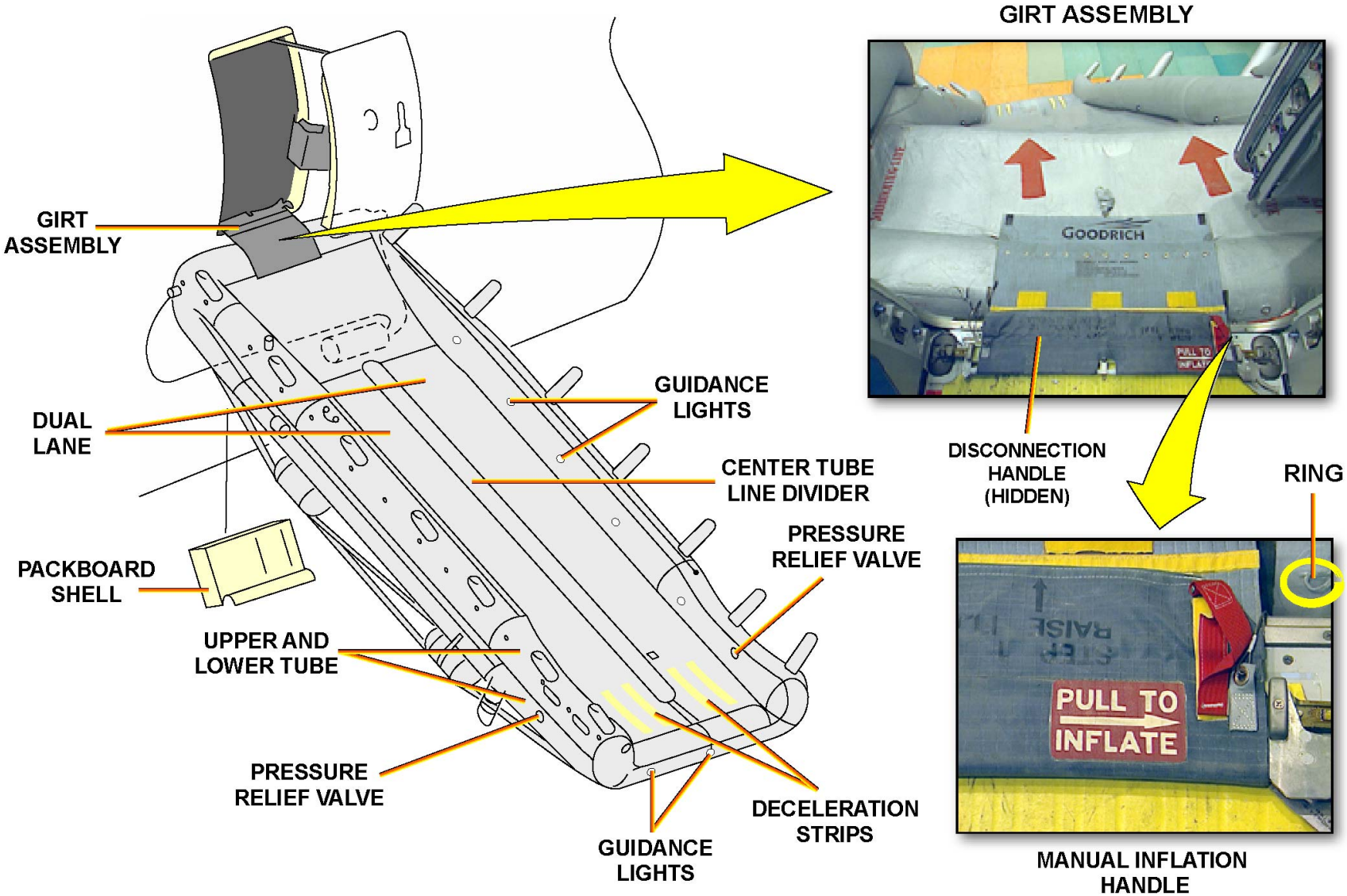

FLOATATION AND SURVIVAL EQUIPMENT - SLIDE/RAFTS DESCRIPTION

G7508471 - G3NT1T0 - FM25D500000002

EMERGENCY EQUIPMENT CABIN D/O

FLOATATION AND SURVIVAL EQUIPMENT (continued)

PACKBOARD ASSEMBLY

The packboard shell is made of composite materials. The mounting/release rails attach the packboard to the door structure. The mounting rails have a quick release mechanism to separate the packboard the slide/raft from the door structure. The Quick release girt bar is inserted in the slide/raft girt assembly and connected to the door with the packboard assembly .The packboard assembly has an electrical connection with the inflation system. A viewing window on the decorative cadre lets the pressure gauge of the inflation reservoir be visible. A safety pin pocket (where is a transportation/ safety pin) is available for maintenance purposes. The system comprises also a parachute pin installed in the speed lacing and safetied with the safety pin.

G7508471 - G3NT1T0 - FM25D500000002

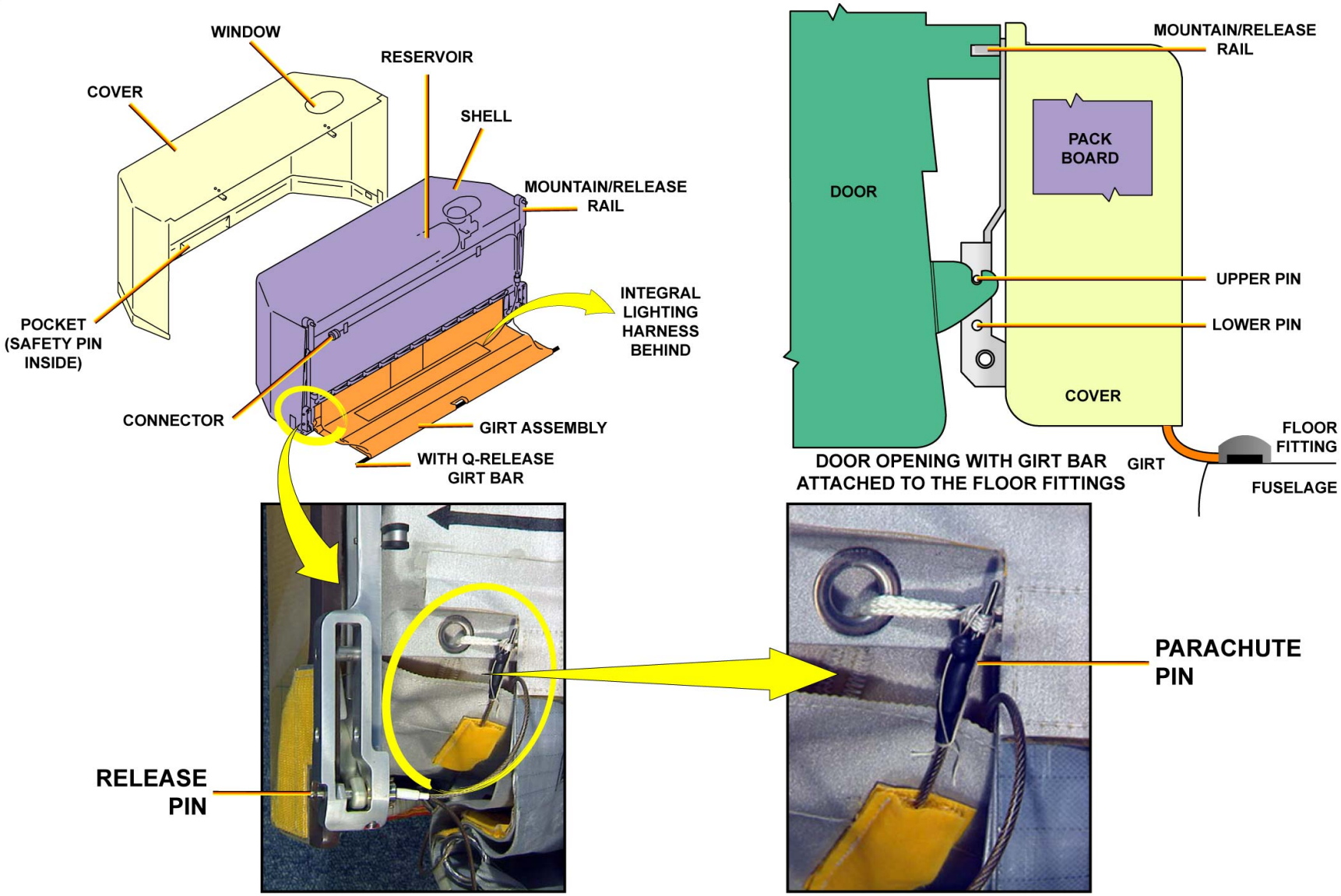

FLOATATION AND SURVIVAL EQUIPMENT - PACKBOARD ASSEMBLY

G7508471 - G3NT1T0 - FM25D500000002

EMERGENCY EQUIPMENT CABIN D/O

FLOATATION AND SURVIVAL EQUIPMENT (continued)

INFLATION SYSTEM

The inflation reservoir keeps gas (nitrogen / carbon dioxide) under High Pressure (HP) to inflate the slide/raft. The inflation reservoir is made of seamless aluminum. It is made stronger with over-wrapped Kevlar fibers, which are bonded together with epoxy resin. The valve regulator assembly is installed onto the inflation reservoir. It controls the gas flow from the inflation reservoir to both aspirators. The pressure gauge is installed on the valve/regulator assembly to show the stored gas pressure.

Gas from the inflation reservoir flows through the inlet assembly of both aspirators when the inflation system is operated. A flexible hose connects the inflation reservoir to each aspirator assembly. A manual inflation handle is attached with a Velcro tape on the girt assembly. If the slide/raft does not inflate automatically when deployed over the doorsill, you can pull the handle to inflate the slide/raft. The firing cable opens the valve when the slide/raft is deployed. You can safety the valve with a locking pin for maintenance. The Cabin Intercommunication Data System (CIDS) through the DOORS page on the Flight Attendant Panel (FAP) monitors the status of the inflation reservoir pressure sensor and the locking pin. To avoid dysfunction, make sure that the lighting switch pin is installed correctly.

G7508471 - G3NT1T0 - FM25D500000002

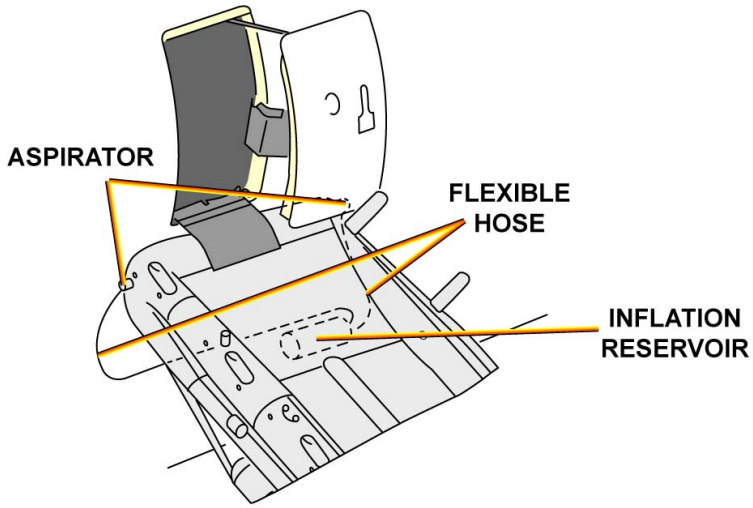

MANUAL INFLATION HANDLE

A330/A340 DOORS PAGE

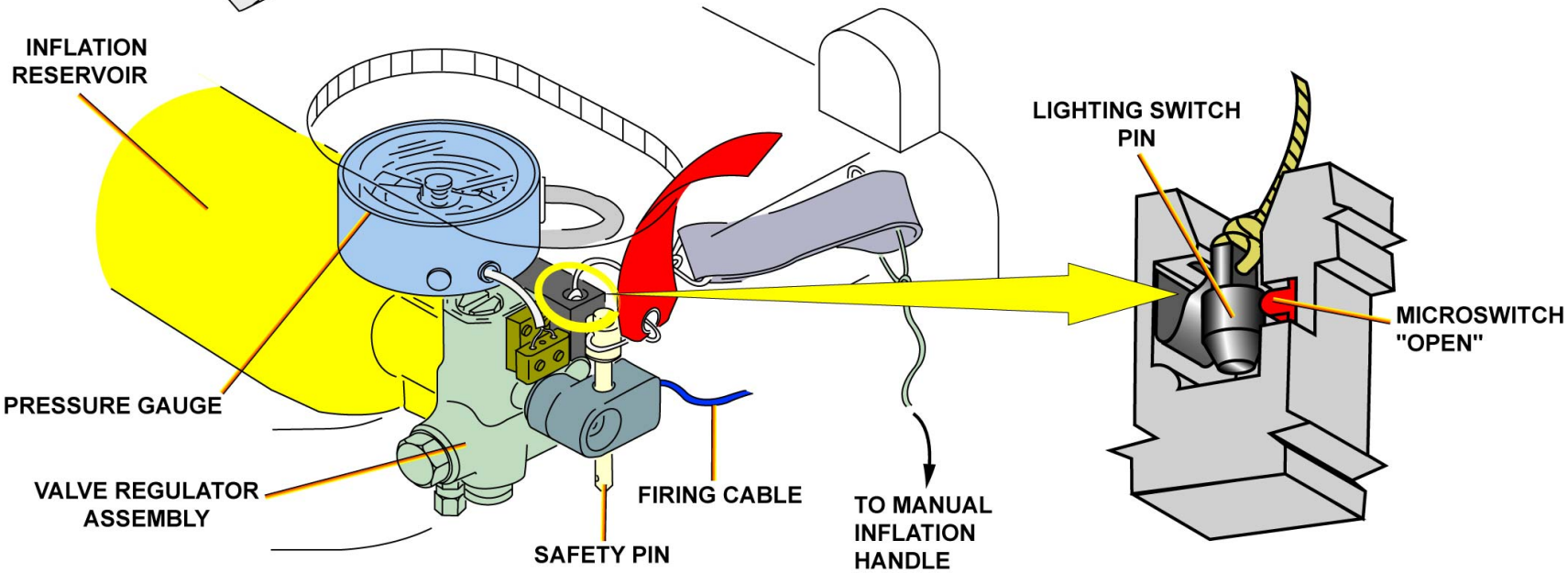

FLOATATION AND SURVIVAL EQUIPMENT - INFLATION SYSTEM

EMERGENCY EQUIPMENT CABIN D/O

FLOATATION AND SURVIVAL EQUIPMENT (continued)

RAFT EQUIPMENT

The raft equipment consists of:
- the life lines attached along the outside of the slide/raft. They are visible to the persons in the water and do not lie flat against the tube,
- the boarding stations, attached to each side of the slide/raft. They have boarding handles and boarding stirrups. This let a person climb into the slide/raft from the water,
- the mooring/re-entry line, which keeps the slide/raft attached to the A/C when the girt assembly of the slide/raft is released, and it lets a person re-enter the A/C over an inflated slide/raft,
- the sea anchor to control the drift and to keep the slide/raft turned into the wind,
- the survival kit composed of a base and a replacement kit,
- the emergency beacon transmitter,
- the hand pump to inflate the chambers through the inflate/deflate valve of the slide/raft if necessary. It is used to inflate the canopy center support tube as well,
- the canopy to give the occupants protection against different environmental conditions and which must be installed manually. It has a hole to collect rainwater. The canopy has a highly visible orange/yellow color and can resist to a wind speed up to 52 knots.

G7508471 - G3NT1T0 - FM25D500000002

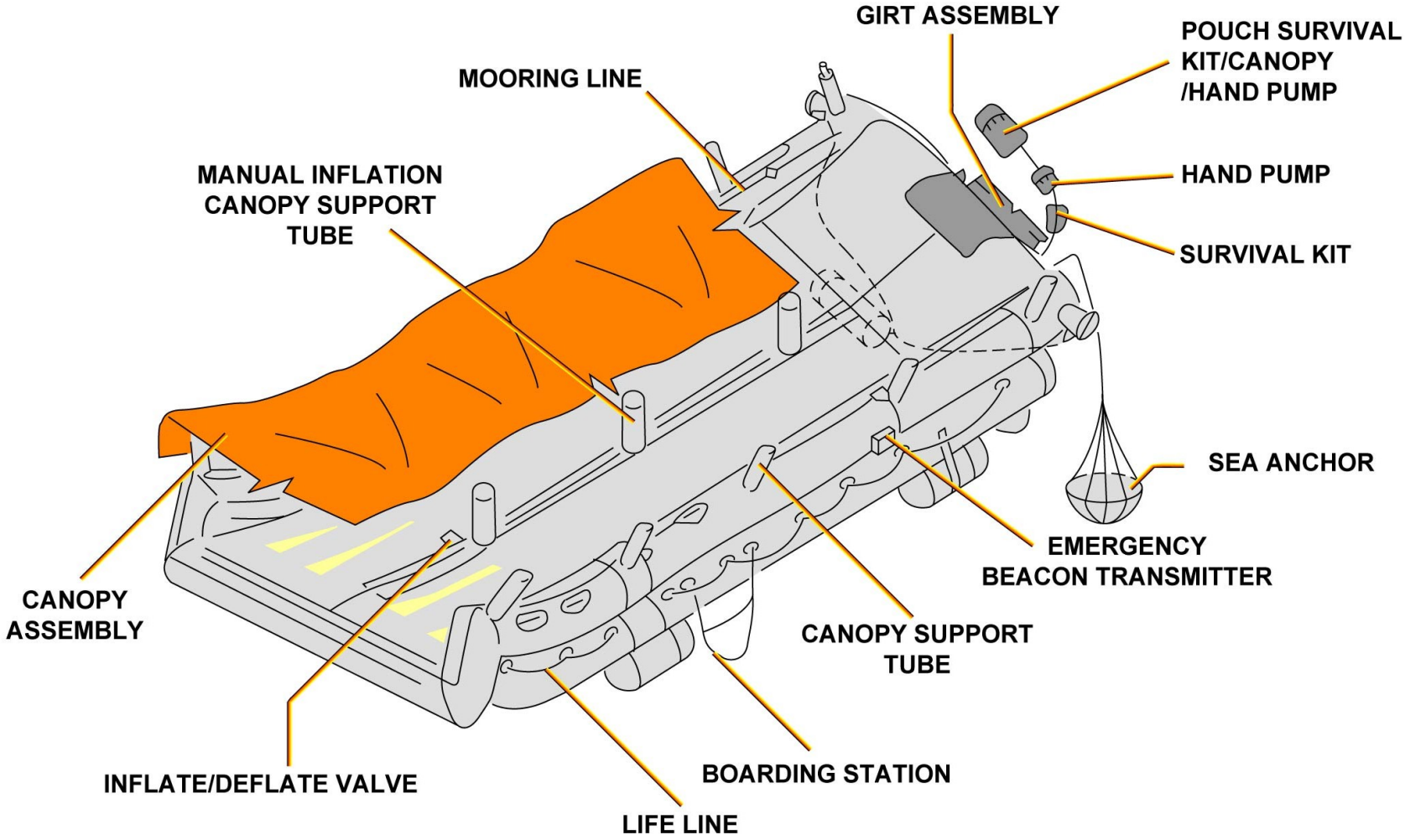

FLOATATION AND SURVIVAL EQUIPMENT - RAFT EQUIPMENT

G7508471 - G3NT1T0 - FM25D500000002

EMERGENCY EQUIPMENT CABIN D/O

FIRST AID EQUIPMENT

The items of the first aid equipment are kept at different locations in the A/C depending on the airlines request. These items include first aid kits, physicians/doctor kit, resuscitation kit, splint pack and miscellaneous items. Each kit is kept in a hermetically sealed waterproof container. The expiration dates are printed on the front of the waterproof container nut. They must be removed from the parked A/C in case of low or high temperature to avoid any medication damages. They usually have a five-year service life.
The resuscitation kit contains instruments for ill or injured passengers. The splint pack contains splints and fittings to help passengers in case of a bone fracture. Other equipment can be found such as pillows, blankets and thermal blankets as well as an airsickness bag in the rear pocket of each passenger seat.

G7508471 - G3NT1T0 - FM25D500000002

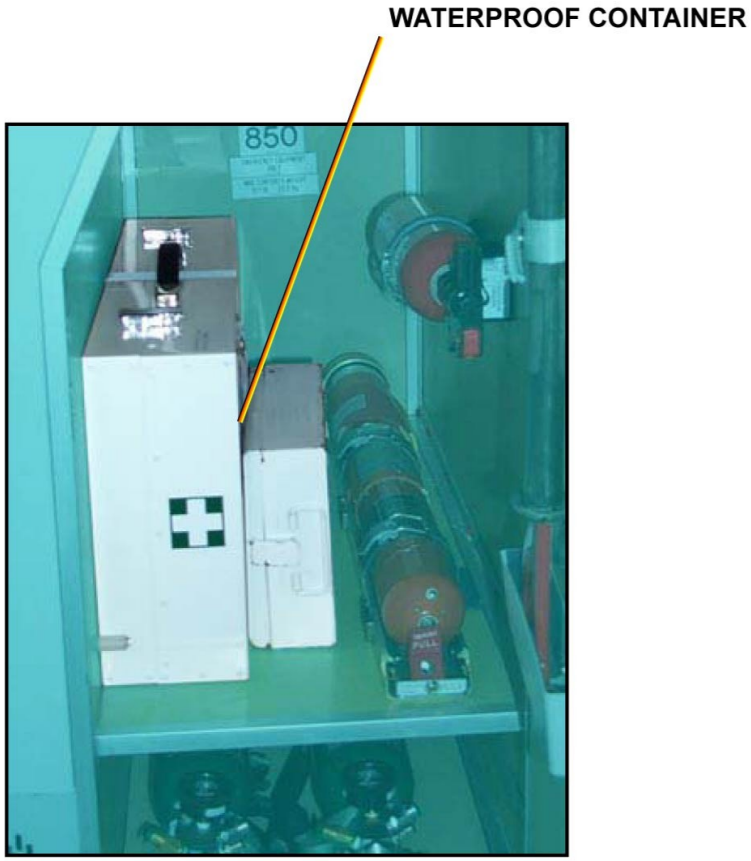

FIRST AID EQUIPMENT

G7508471 - G3NT1T0 - FM25D500000002

EMERGENCY EQUIPMENT CABIN D/O

SLIDE/RAFTS DEPLOYMENT

This is the slide/rafts deployment video.

NOTE: Note: Other types of slide/raft have the same principle of deployment as the one shown in the video.
Note: To prevent damage to the A/C, use material specified in the AMM to protect the fuselage during deployment test.
Note: Once deployment tests are done, make sure that the slide light supply is unplugged before removing it.

G7508471 - G3NT1T0 - FM25D500000002

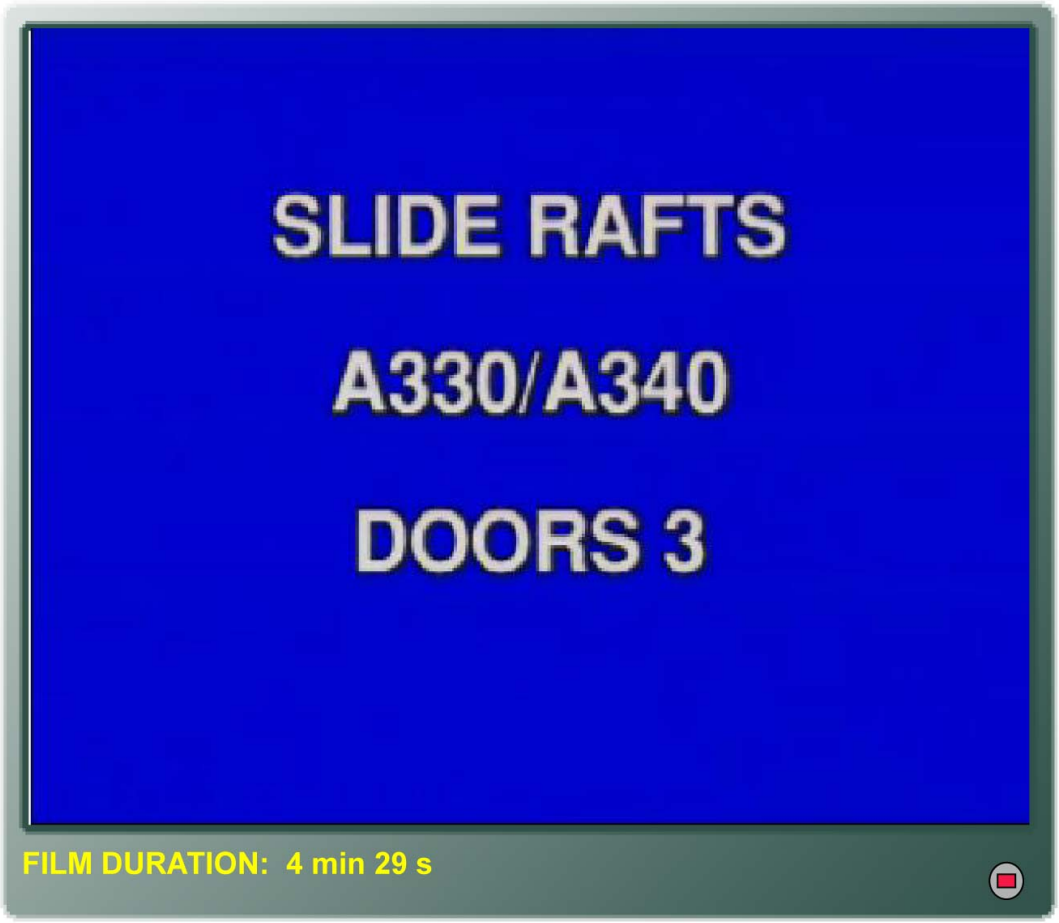

SLIDE/RAFTS DEPLOYMENT

G7508471 - G3NT1T0 - FM25D500000002

LOWER DECK DECOMPRESSION SAFETY SYSTEM

COMPONENT DESCRIPTION

The rapid decompression panels (blow-in/blow-out) are installed in the sidewall panels and in the fixed partition walls. They prevent damage to the aircraft structure in case of sudden pressure difference. The system prevents a pressure difference between different areas in the aircraft (cockpit/cabin, or cabin/cargo compartment-. The panels have a composite structure made of a honeycomb-core and a flame-retardant laminated-skin. Foam-tape is bonded into the recess of the panel border and makes a seal between the panel and the frame. There is a flame-retardant strip between the Foam-tape and the border edge. Some frames have protective devices. The Panel assemblies include a panel, a frame and fastener assemblies. The fastener assemblies are attached to the frames and include some latches, springs and catches.

G7508471 - G3NT1T0 - FM25DD000000001

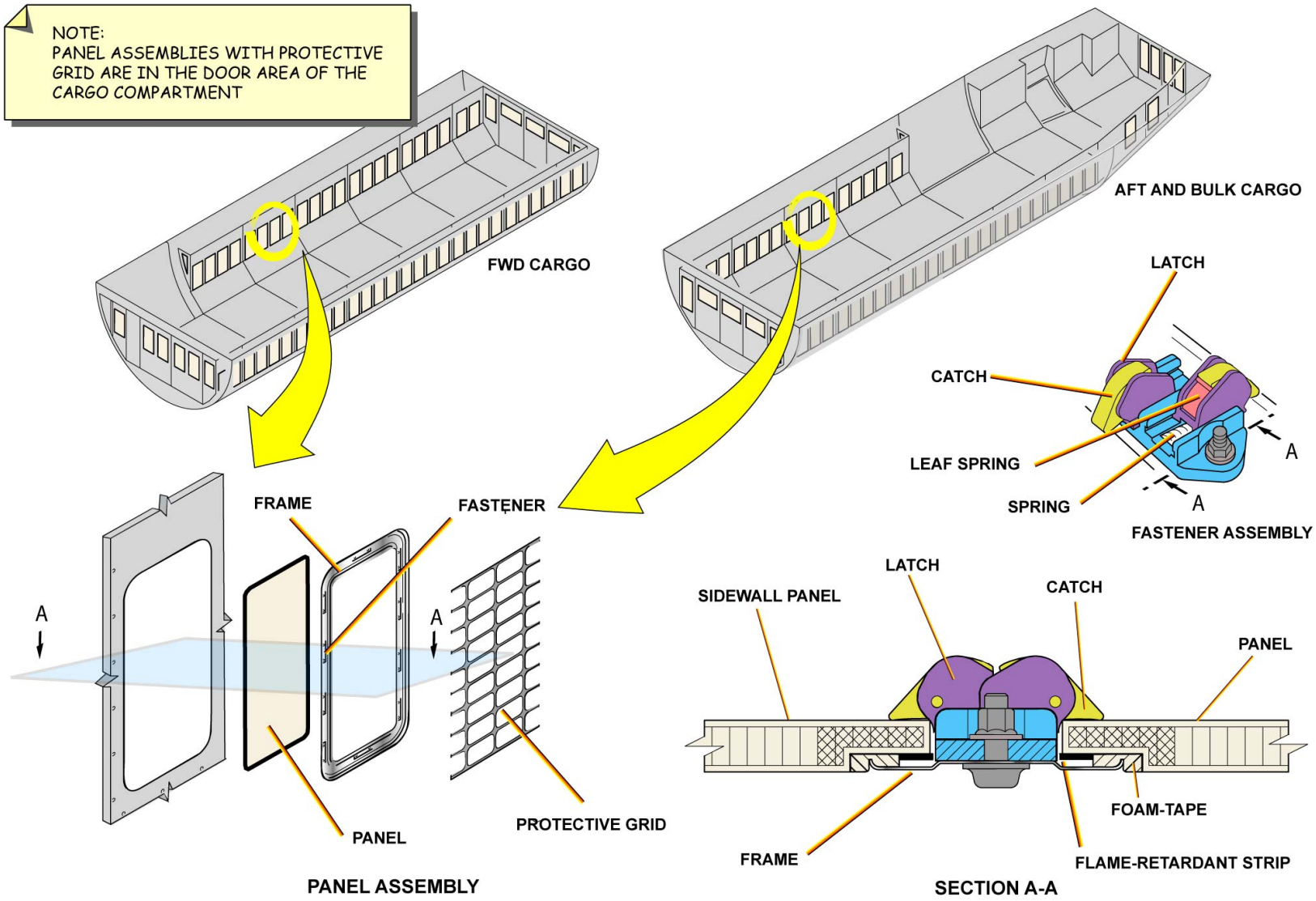

COMPONENT DESCRIPTION

LOWER DECK DECOMPRESSION SAFETY SYSTEM

RAPID DECOMPRESSION PANELS

If a rapid-decompression occurs in the cargo compartment, the higher air pressure pushes the panel assemblies against their fasteners.
This force will release the catches and the panel assemblies are blown inboard (Blow-in). The higher air pressure can flow from the cabin to the Cargo Compartment.
If a rapid-decompression occurs in the Cabin, the higher air pressure pushes the panel against their fasteners.
This force will release the catches and the panels are blown outboard (Blow-out). The higher air pressure can flow from the cargo compartment to the Cabin.

G7508471 - G3NT1T0 - FM25DD000000001

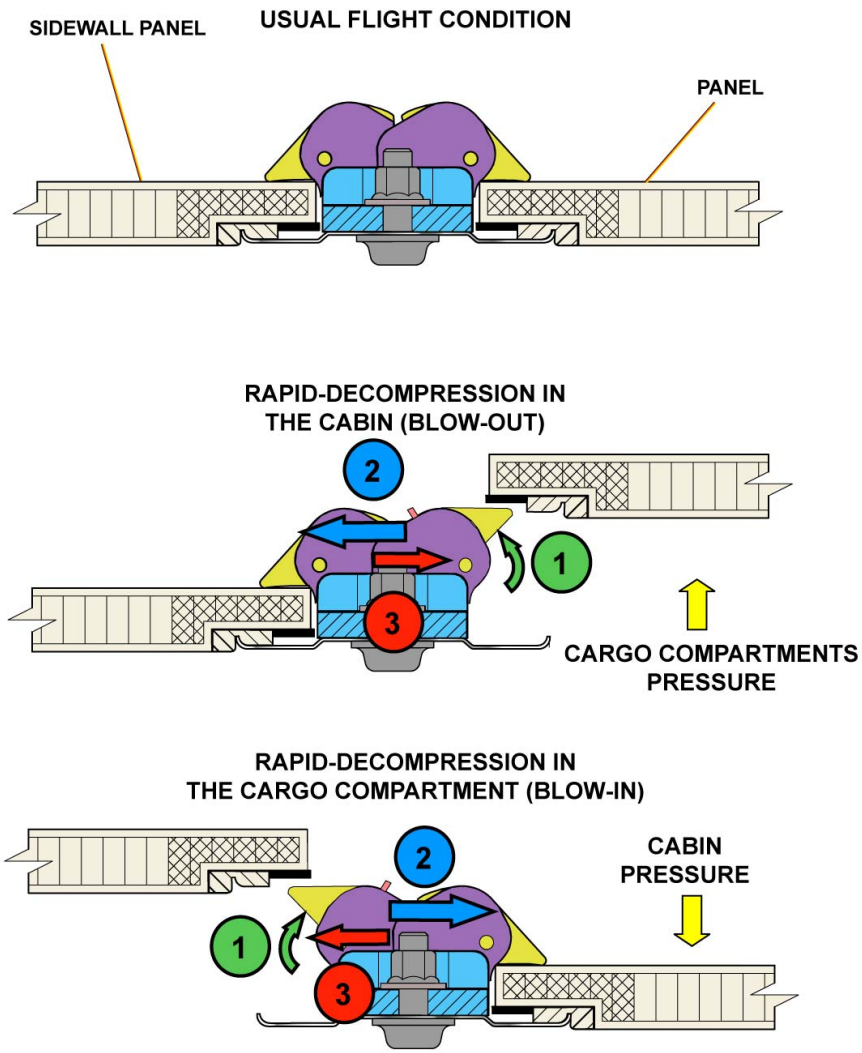

RAPID DECOMPRESSION PANELS

G7508471 - G3NT1T0 - FM25DD000000001

LOWER DECK DECOMPRESSION SAFETY SYSTEM

RESET

The reset of rapid decompression panel is done by one pressure on the panel. During this operation, the catch recoils and rotates at the same time. The catch is held and locked with the help of leaf spring.
Once this operation is carried out, the panel returns into its initial position.
The system of reset on the panel and on the frame is identical.

G7508471 - G3NT1T0 - FM25DD000000001

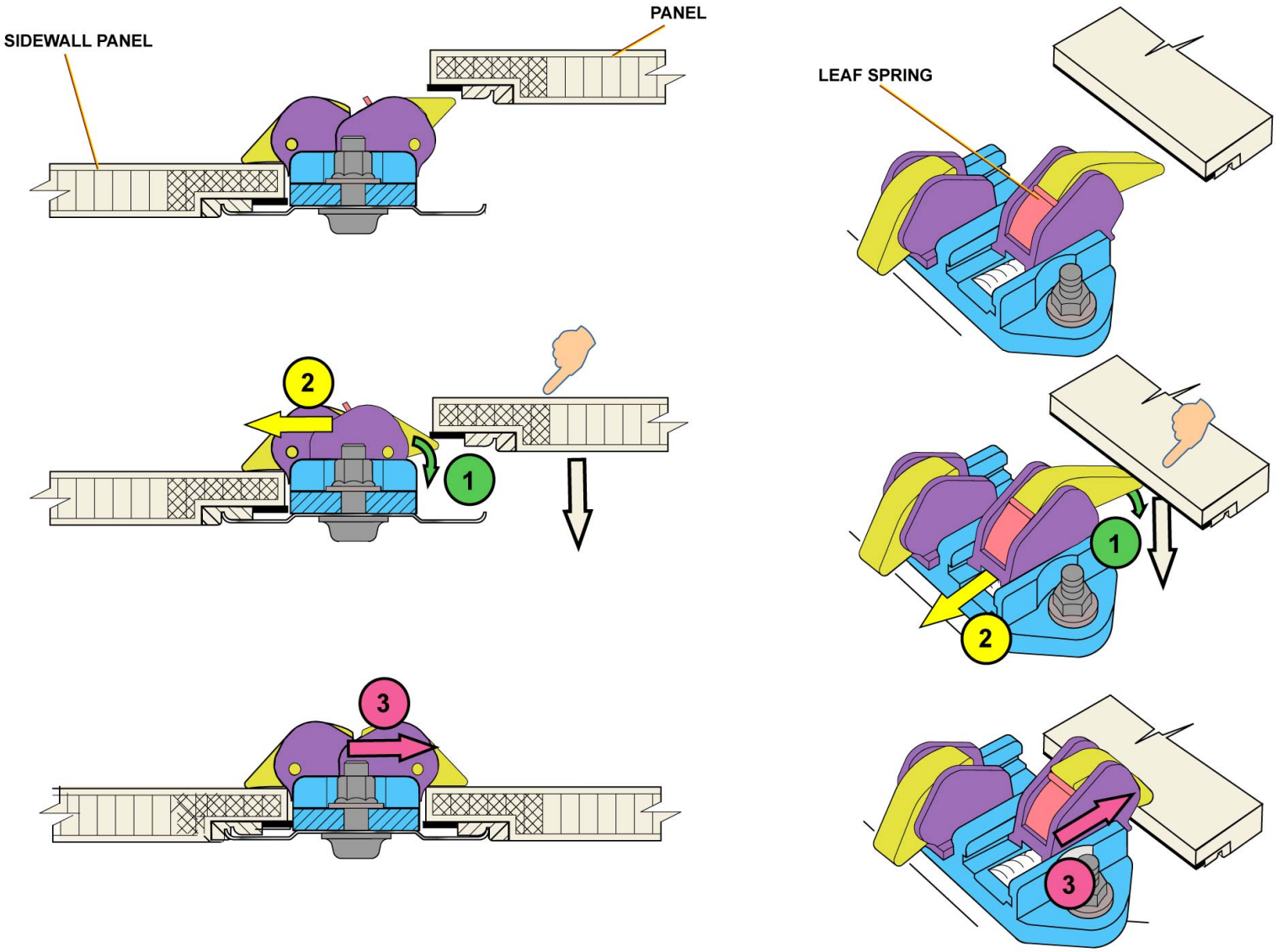

RESET

G7508471 - G3NT1T0 - FM25DD000000001

CARGO LOADING SYSTEM D/O (3)

DESCRIPTION

The semi-automatic Cargo Loading System (CLS) of the FWD and aft cargo compartments is used for loading, unloading and moving the Unit Load Devices (ULDs). These ULDs can be pallets or containers of different sizes. One person can operate the CLS. If there is no electrical power available, it is possible to load or unload manually. The semi-automatic CLSs of the FWD and aft lower deck cargo compartments are similar in construction and equivalent in operation.
The CLS has:
- transport components,
- latching components,
- control components,
- guiding components.

G7508471 - G3NT1T0 - FM25D600000003

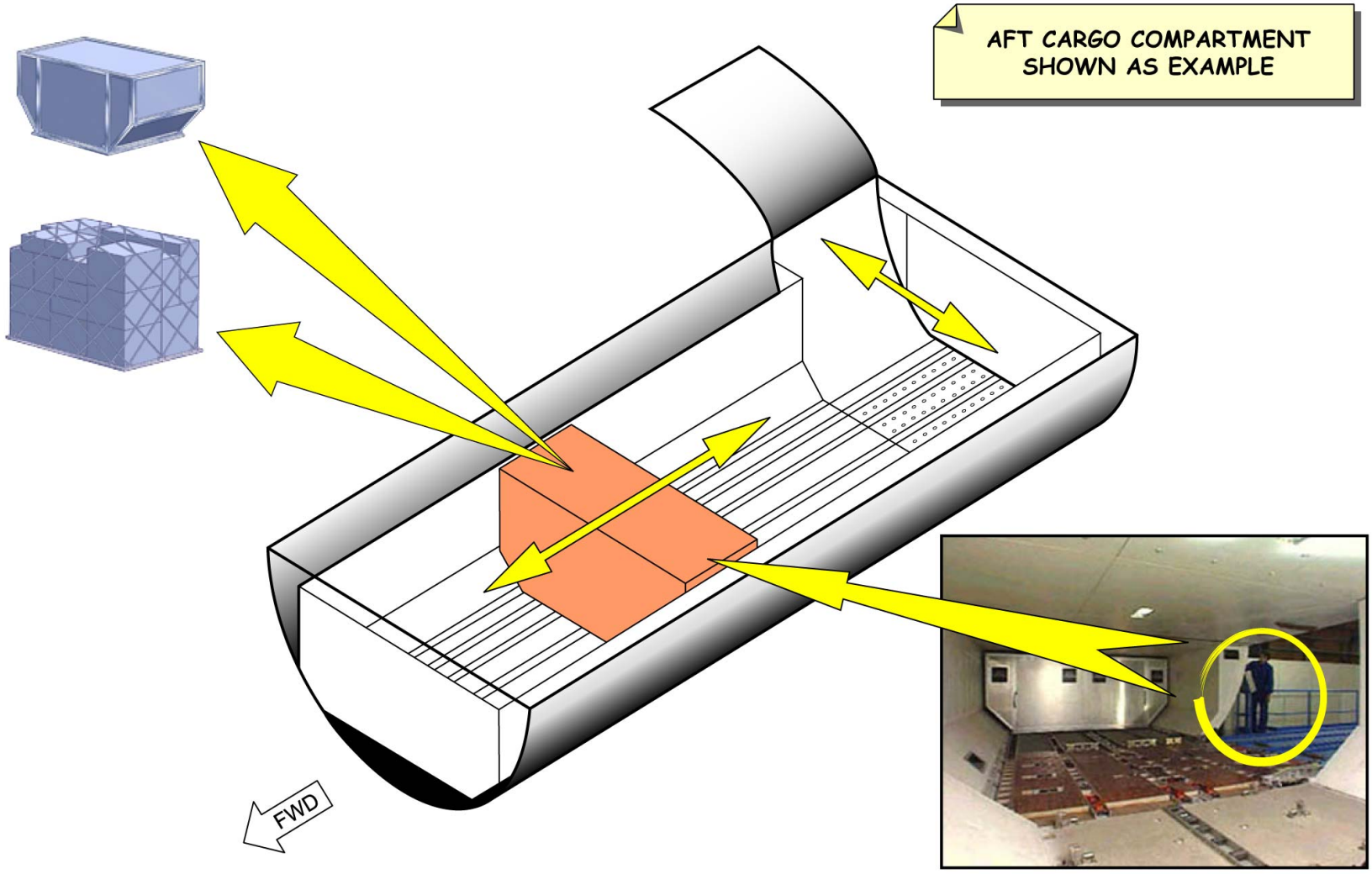

OPERATION BY ONE PERSON

DESCRIPTION

G7508471 - G3NT1T0 - FM25D600000003

CARGO LOADING SYSTEM D/O (3)

DESCRIPTION (continued)

TRANSPORT COMPONENTS

The components to convey the ULDs are:
- six roller tracks installed. They are part of the floor structure. The ULDs move on these roller tracks. They incorporate free running rollers and braking rollers. The braking rollers slow the movements of the ULDs for safety reasons.
- the ball mats extend across the full length of the entrance area and across the full width of the compartment. They are used for the ULDs change of direction during loading and unloading. Ball mats and ball strips have light alloy plates, which contain a number of ball units. The ball mats are installed between the roller tracks, and the ball strips in the roller tracks.
- the sensorized Power Drive Units (PDUs) are installed for movement of the ULDs in the lateral and longitudinal direction. The PDUs have self-lifting rollers. The PDUs are equipped with a sensorized control device which functions as a ULD scanning device. The scanning device is an integrated part of the PDU and its internal printed circuit boards. When the ULD moves over the PDU it triggers the scanning device, which causes the roller to come up and move the ULD. When the ULD has moved over the PDU the scanning devices goes on standby and the rollers retract.
- the other type of PDUs are installed for movement of the ULDs in the longitudinal direction. The PDUs have self-lifting rollers. Electrical AC power supplies the PDUs. When the adjacent latch is lowered, the PDU is energized and its drive roller is lifted until it touches the bottom of the ULDs. When the unit is de-energized or its adjacent latch is lifted, the roller stops and is lowered under system weight.

G7508471 - G3NT1T0 - FM25D600000003

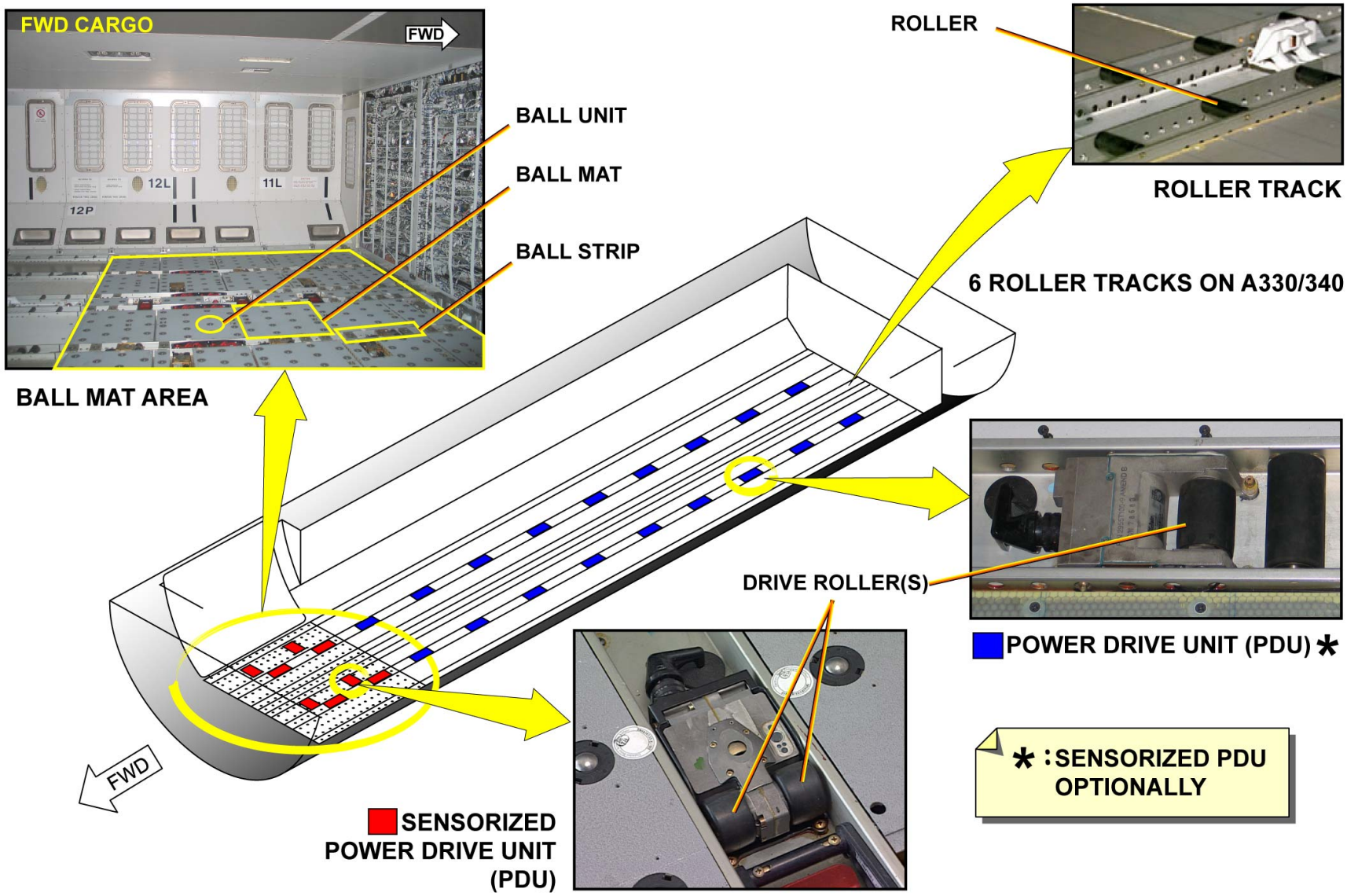

DESCRIPTION - TRANSPORT COMPONENTS

CARGO LOADING SYSTEM D/O (3)

DESCRIPTION (continued)

LATCHING COMPONENTS

The latching components are installed on the floor of the compartment. They are used for the ULDs locking. They are identified to show in which direction they have an effect:
- X > longitudinal,
- Y > transversal,
- Z > vertical.

There are three types of latches:
- the doorsill latches. They are provided in the doorsills to lock the ULDs in the lateral and vertical directions. They incorporate two different types of latches: the manually operated YZ latches and the overridable Y latches. When unloading containers, the doorsill latch releases lever must be operated for each container to lower the Y latches. This is installed to avoid movement of ULDs during unloading.
- the manually operated and overridable YZ latches. They are installed on the A/C centerline to hold the half width ULDs in the lateral and vertical directions. The overridable YZ latches are lowered against spring pressure when a full width ULD is moved over them. The manually operated YZ latches are installed on the A/C centerline in the ball mat area. They must be lowered for loading and unloading.
- the XZ single, double and fixed latches. They are installed in the roller tracks to hold the ULDs in longitudinal and vertical directions. The single and double latches are manually operated. When they are lifted, the PDUs behind this latch row are turned off. The fixed XZ latches are installed in the roller tracks at the wing-box end of the compartment. They operate as stops for the ULDs and protection for the partition wall.

The AFT cargo compartment control panel is similar to the FWD one except the control and indicating system of the Y-guides:
- The Y-guide switch is used to unlock the Y-guides in the load direction. For unloading, the Y-guides are overridable.
- The Y-guide load light comes on when one or more Y-guides are inoperative.

G7508471 - G3NT1T0 - FM25D600000003

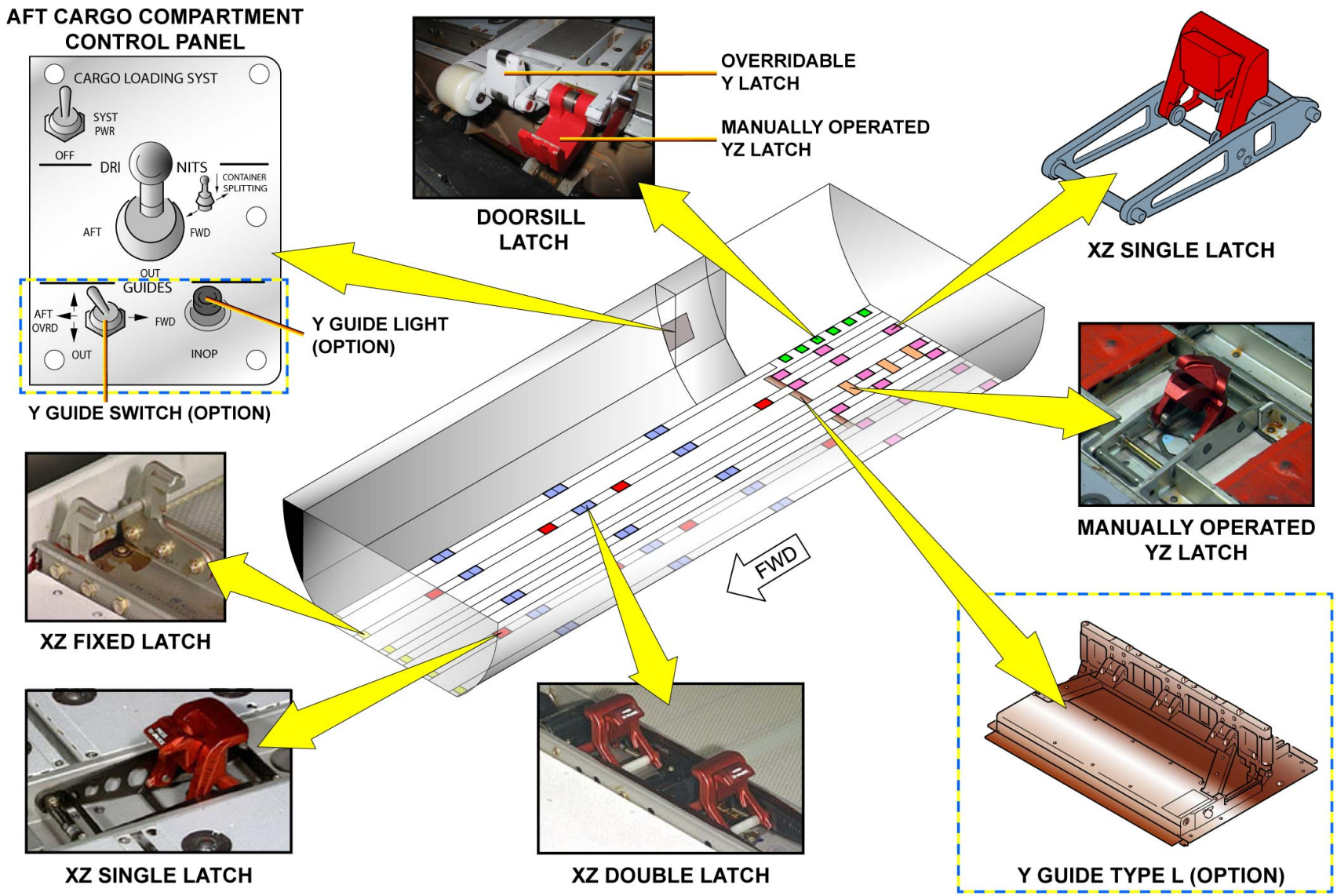

DESCRIPTION - LATCHING COMPONENTS

CARGO LOADING SYSTEM D/O (3)

DESCRIPTION (continued)

CONTROL COMPONENTS

There are four different control components:
The control panel, located behind a service door adjacent to the cargo compartment door, has:
- the sill lock lever, which is used to unlock the overrideable Y-latches of the cargo compartment doorsill,
- the power switch, which is used to energize/de-energize the cargo loading system,
- the joystick.

The inside control panel, which is installed in the ceiling panel adjacent to the cargo door, has a two-way joystick. It is used for the control of the ULDs movements on the roller tracks. It has two positions: FWD and aft. The Power Drive Units are energized only if the joystick is activated.
The control box is installed above the housing of the control panel. It gives all signals to the related components.
The C/B panel is installed in the ceiling, near the cargo compartment door.
The Maintenance Display Unit (MDU) is installed in the service panel 5022VE and will indicate relevant maintenance data. The display is designed to indicate the data in two lines of twenty characters. The MDU is linked via a network to the controller components. The MDU indicates failures of the electrical components, the PDUs, the proximity switches and the control panels.
There are two different types of switches used for the CLS:
- the mechanical switches. They are attached to the YZ latches in the doorsill and they are connected in series. When the YZ latches are locked in the lifted position, you can operate the cargo compartment door but the CLS is electrically isolated. When the YZ latches are lowered, the cargo compartment door mechanism is electrically isolated but the CLS is operative.
- the proximity switches. They are attached to the related XZ latches. When you lift these XZ latches, you electrically isolate the related PDU. This inhibits the operation of the PDU when the ULD is latched in position.

G7508471 - G3NT1T0 - FM25D600000003

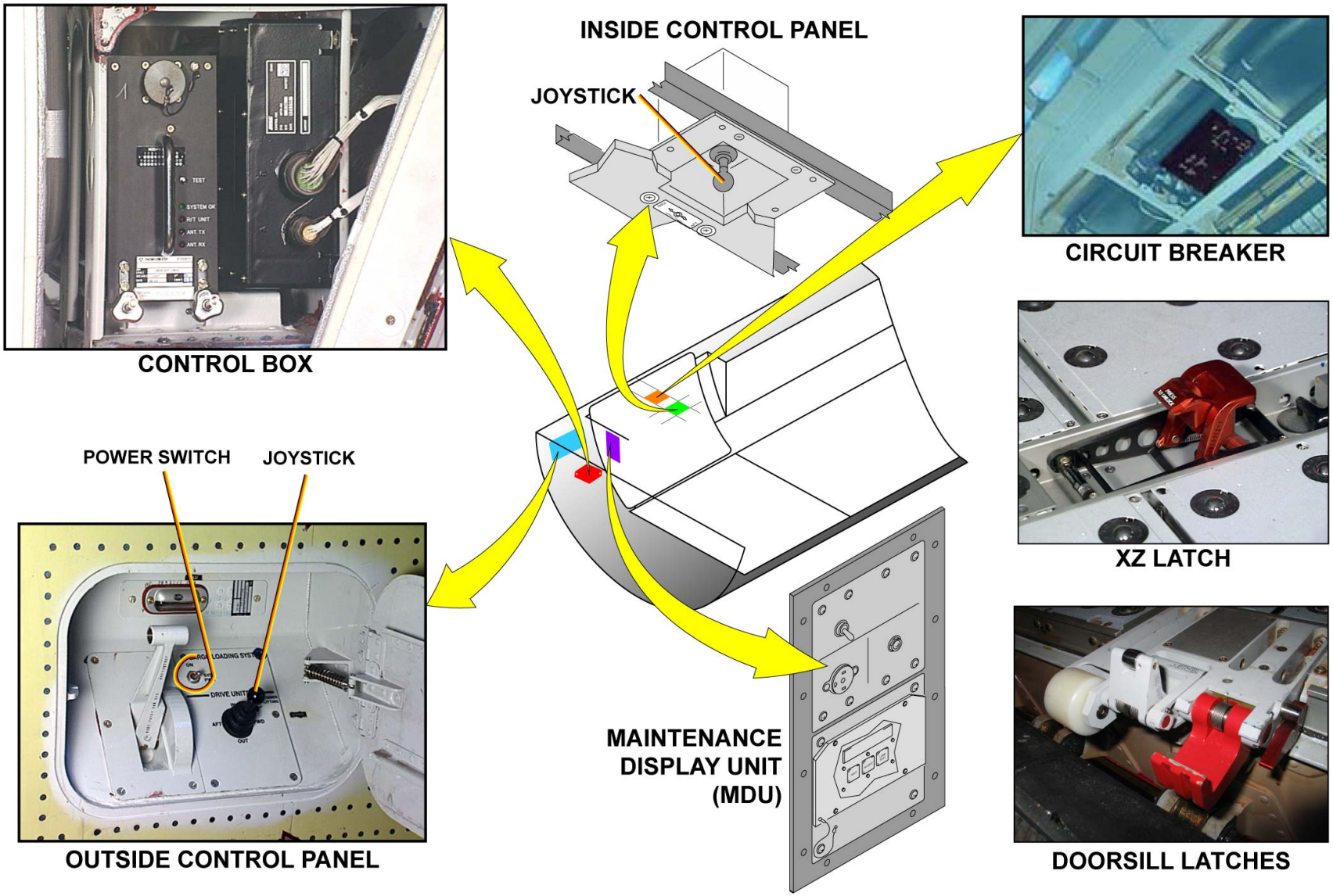

DESCRIPTION - CONTROL COMPONENTS

G7508471 - G3NT1T0 - FM25D600000003

CARGO LOADING SYSTEM D/O (3)

DESCRIPTION (continued)

GUIDING COMPONENTS

The guiding components are identified to show in which direction they have an effect:
- X > longitudinal,
- Y > transversal,
- Z > vertical.

There are four types of guiding components:
- the entrance guide installed at the doorsill allows proper guiding of the ULDs and protect the doorframe. The guide has a sloped front plate with four vertical guide rollers. The guide rail is hinge-attached to the nearest fixed YZ guide to the entrance.
- the XY guides installed at the cargo doorsill. The guide has a sloped front plate with a guide roller to absorb shocks and a guide-rail with two guide rollers. The guide-rail is hinge-attached to the nearest fixed YZ latch located at the cargo door entrance.
- the continuous side guides are installed between the fixed YZ latches along the cargo compartment.
- the fixed YZ guides. A row of five YZ guides and two guide-rails are installed at the end of the roller tracks at the cargo door entrance. They are used like YZ guides when you load or unload the ULD, as XZ latches when the ULDs are locked in position, and to protect the end wall of the cargo compartment. Each YZ guide can have one or two vertical guide rollers and each Y guide-rail has two vertical guide rollers.

The retractable Y guides are installed on the A/C centerline to align the half-width ULDs. The retractable Y guide is overridable in one way. You can retract and lift them manually.

G7508471 - G3NT1T0 - FM25D600000003

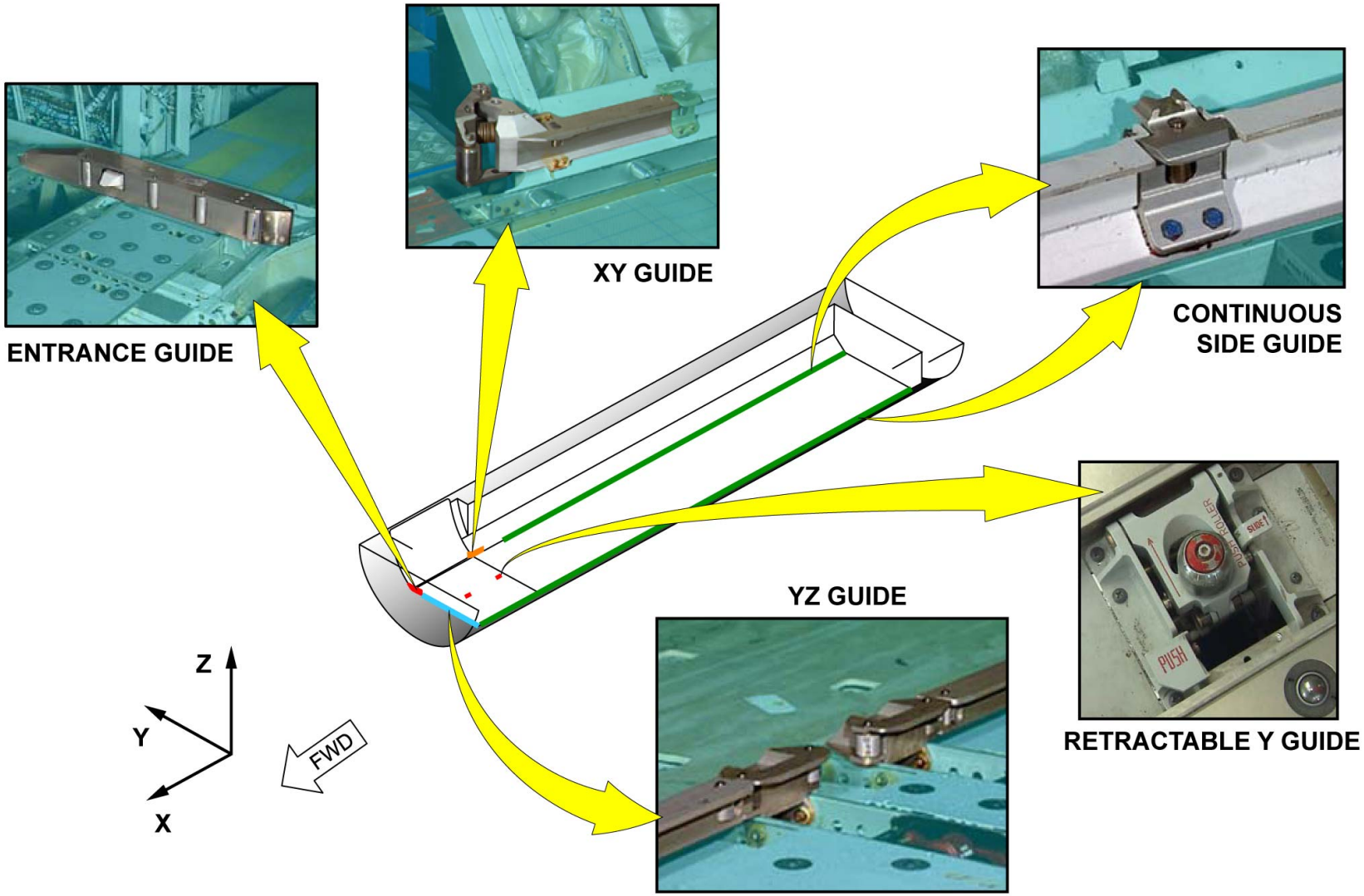

DESCRIPTION - GUIDING COMPONENTS

G7508471 - G3NT1T0 - FM25D600000003

CARGO LOADING SYSTEM D/O (3)

DESCRIPTION (continued)

DRAINAGE

The FWD, aft and bulk cargo compartments have a drainage system that collects fluids and drains them through the bilge area into drain valves. The drain valves are installed at the bottom of the fuselage. If the cabin pressure is below a given value i.e. the A/C is near to or on the ground, a spring holds the valves open. The fluids drain out and are removed by the airflow or gravity. If the cabin pressure is above a given value i.e. the A/C is in flight, the drain valves close automatically.

G7508471 - G3NT1T0 - FM25D600000003

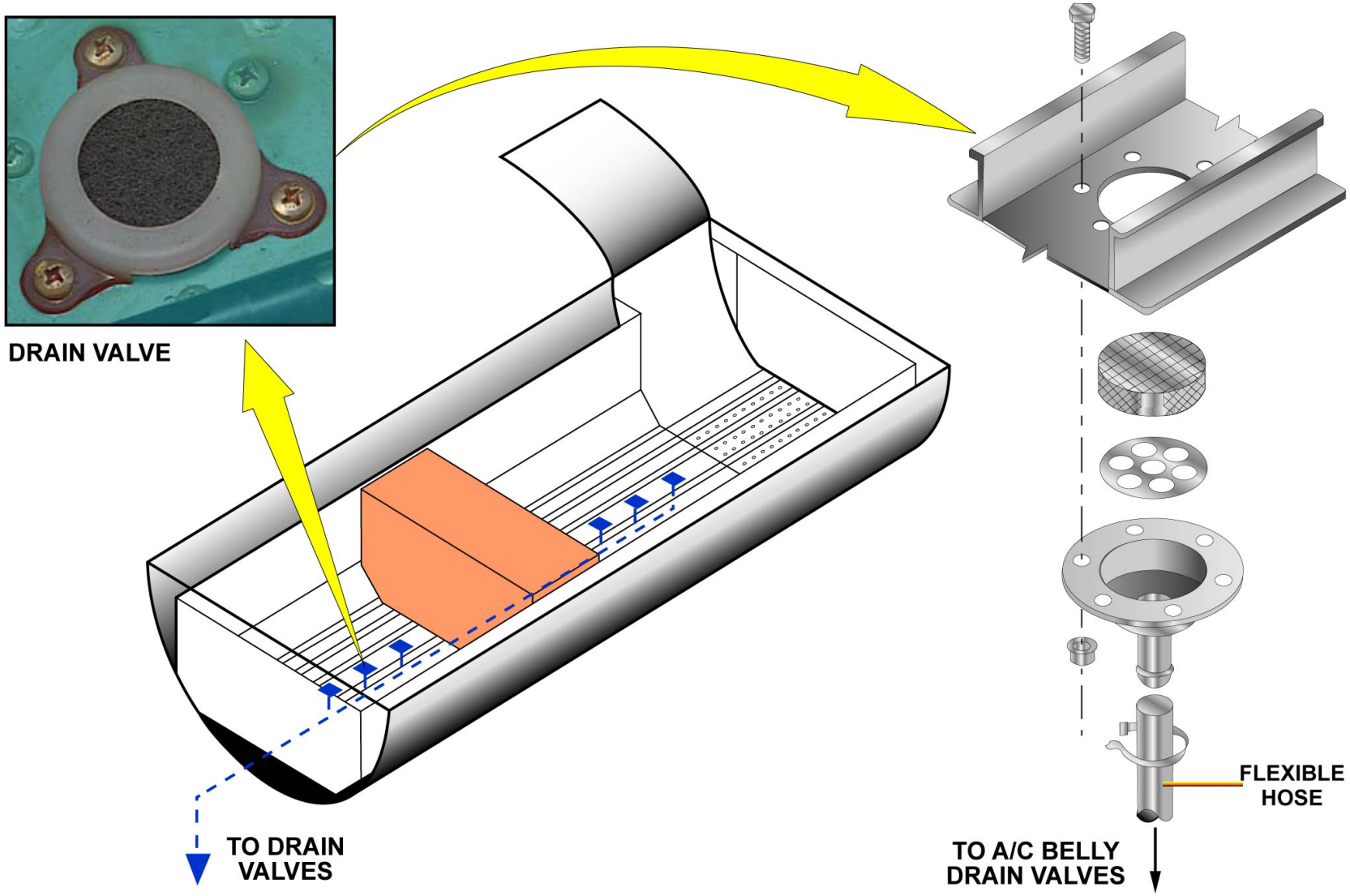

DESCRIPTION - DRAINAGE

G7508471 - G3NT1T0 - FM25D600000003

CARGO LOADING SYSTEM D/O (3)

SINGLE LD3 CONTAINER OPERATION

This is single ld3 container operation video.

DOUBLE LD3 CONTAINER OPERATION

This is double ld3 container operation video.

TRANSVERSAL GUIDES ACTIVATION / DEACTIVATION

This is the transversal guides deactivation / activation video.

G7508471 - G3NT1T0 - FM25D600000003

This Page Intentionally Left Blank

G7508471 - G3NT1T0 - FM25D600000003

EQUIPMENT/FURNISHINGS SYSTEM BASE MAINTENANCE (3)

EMERGENCY ESCAPE SLIDE REMOVAL AND REPLACEMENT

SAFETY PRECAUTIONS

WARNING: BEFORE YOU START WORK ON THE DOOR MAKE SURE THAT:
- THE EMERGENCY CONTROL HANDLE IS IN THE DISARMED POSITION WITH THE SAFETY PIN INSTALLED,
- THE PERCUSSION LEVER OF THE DOOR DAMPER AND EMERGENCY OPERATION CYLINDER IS IN THE DISARMED POSITION WITH THE SAFETY PIN INSTALLED.

THIS MAKES SURE THAT THE DOOR DOES NOT OPEN SUDDENLY. IF THE DOOR OPENS SUDDENLY IT CAN CAUSE INJURY AND/OR DAMAGE.
MAKE SURE THAT THE SAFETY/LOCK PIN IS CORRECTLY INSTALLED IN THE REGULATOR VALVE ASSEMBLY OF THE INFLATION RESERVOIR. THIS PREVENTS ACCIDENTAL:
- DISCHARGE OF THE INFLATION RESERVOIR,
- DEPLOYMENT OF THE ESCAPE SLIDE.

THIS CAN CAUSE INJURY AND/OR DAMAGE.

G7508471 - G3NT1T0 - FM25Y2BASEMCE03

WARNING

WARNING: BEFORE YOU START WORK ON THE DOOR MAKE SURE THAT:
- THE EMERGENCY CONTROL HANDLE IS IN THE DISARMED POSITION WITH THE SAFETY PIN INSTALLED,
- THE PERCUSSION LEVER OF THE DOOR DAMPER AND EMERGENCY OPERATION CYLINDER IS IN THE DISARMED POSITION WITH THE SAFETY PIN INSTALLED.
THIS MAKES SURE THAT THE DOOR DOES NOT OPEN SUDDENLY. IF THE DOOR

WARNING

WARNING: MAKE SURE THAT THE SAFETY/LOCK PIN IS CORRECTLY INSTALLED IN THE REGULATOR VALVE ASSEMBLY OF THE INFLATION RESERVOIR. THIS PREVENTS ACCIDENTAL:
- DISCHARGE OF THE INFLATION RESERVOIR,
- DEPLOYMENT OF THE ESCAPE SLIDE.
THIS CAN CAUSE INJURY AND/OR DAMAGE.

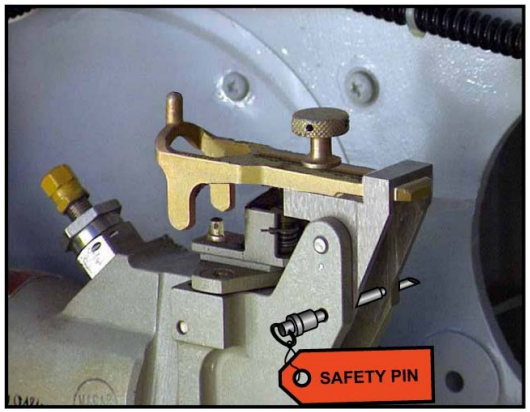

EMERGENCY ESCAPE SLIDE REMOVAL AND REPLACEMENT - SAFETY PRECAUTIONS

EQUIPMENT/FURNISHINGS SYSTEM BASE MAINTENANCE (3)

EMERGENCY ESCAPE SLIDE REMOVAL AND REPLACEMENT (continued)

PASSENGER/CREW DOOR (TYPE A) SLIDE REMOVAL PROCEDURE

CAUTION: During the following procedure do not open the door. If you do so, you will start the sequence of steps that pulls the inflatable assembly out of the pack-assembly. Do not pull the girt assembly. If you do so, you will open the pack-assembly.
Support the unit carefully to prevent injury to persons and damage. The unit is heavy.

Remove the slide safety pin, and set the control handle to the ARMED/AUTOMATIC position. Then remove the quick-release bar by pushing the release lever of the door to separate the girt assembly from the door. The release lever is located at the bottom left corner of the door.

To remove the pack-assembly, loosen the screws, hold the unit to disengage the rails from the hooks, then put the pack-assembly on the cabin floor. Disconnect the electrical connector and install blanking caps.

Re-fit the quick-release bar into the girt bar by pulling the release lever.

Set the emergency control handle to the DISARMED/MANUAL position and install the slide safety pin. Carefully lift the door by using the door control handle. Confirm that the girt bar is attached to the lockjaw, then close the door again.

You can now remove the pack-assembly from the A/C.

Removal of the escape slide raft pack assembly

...
Job set-up
...
Procedure
...

- Remove the quick-release bar from the girt bar.
- Remove the pack-assembly from the door.
- Install the quick-release bar in the girt bar.
- Set the emergency control-handle to the DISARMED/MANUAL position, and install the safety pin.

...
Close-up
...

CAUTION

During the following procedure:
- do not open the door.
- do not pull the girt assembly.

Removal of the escape slide raft pack assembly

...
✓ Job set-up
...
Procedure
...
➡ Remove the quick-release bar from the girt bar.

Remove the pack-assembly from the door.

Install the quick-release bar in the girt bar.

Set the emergency control-handle to the DISARMED/MANUAL position, and install the safety pin.

...
Close-up
...

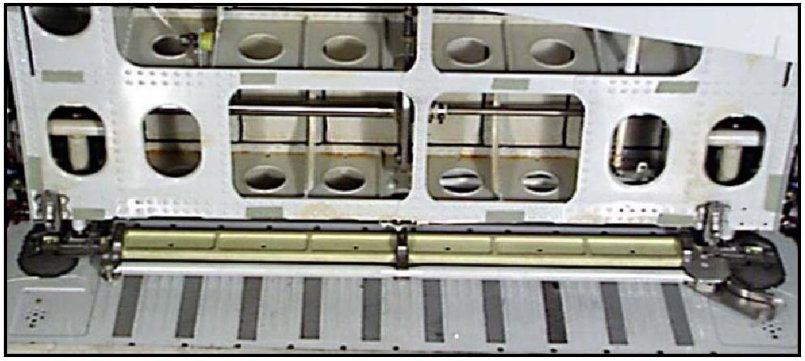

HANDLE IN THE ARMED POSITION

EMERGENCY ESCAPE SLIDE REMOVAL AND REPLACEMENT - PASSENGER/CREW DOOR (TYPE A) SLIDE REMOVAL PROCEDURE

Removal of the escape slide raft pack assembly

...
✓ Job set-up
...
Procedure
...
✓ Remove the quick-release bar from the girt bar.

➡ Remove the pack-assembly from the door.

Install the quick-release bar in the girt bar.

Set the emergency control-handle to the DISARMED/MANUAL position, and install the safety pin.

...
Close-up
...

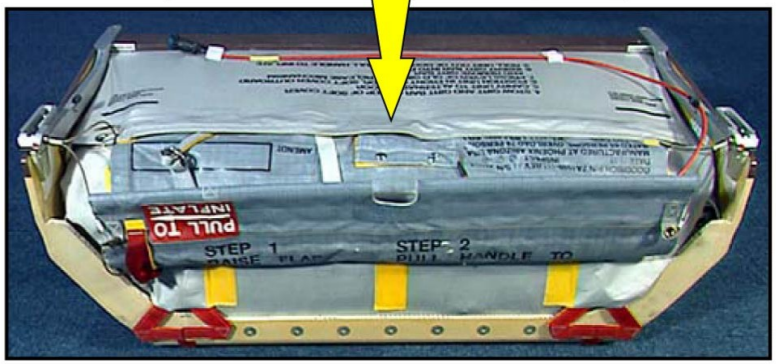

EMERGENCY ESCAPE SLIDE REMOVAL AND REPLACEMENT - PASSENGER/CREW DOOR (TYPE A) SLIDE REMOVAL PROCEDURE

Removal of the escape slide raft pack assembly

...
✓ Job set-up
...
Procedure
...

✓ Remove the quick-release bar from the girt bar.

✓ Remove the pack-assembly from the door.

➡ Install the quick-release bar in the girt bar.

Set the emergency control-handle to the DISARMED/MANUAL position, and install the safety pin.

...
Close-up
...

Note:

The quick-release bar remains attached to the door so carrefully pull it from the girt assembly to fit it on the door again.

Removal of the escape slide raft pack assembly

...
✓ Job set-up
...
Procedure
...

✓ Remove the quick-release bar from the girt bar.

✓ Remove the pack-assembly from the door.

✓ Install the quick-release bar in the girt bar.

➡ Set the emergency control-handle to the DISARMED/MANUAL position, and install the safety pin.

...
Close-up
...

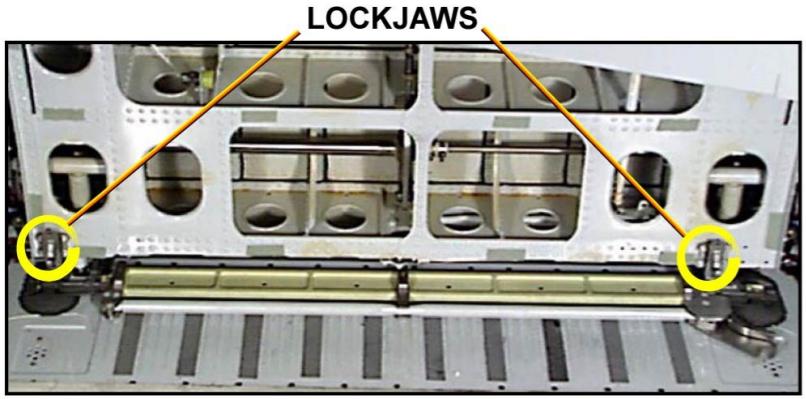

HANDLE IN THE DISARMED POSITION

EMERGENCY ESCAPE SLIDE REMOVAL AND REPLACEMENT - PASSENGER/CREW DOOR (TYPE A) SLIDE REMOVAL PROCEDURE

Removal of the escape slide raft pack assembly

...
✓ Job set-up
...
✓ Procedure
...
✓ Remove the quick-release bar from the girt bar.

✓ Remove the pack-assembly from the door.

✓ Install the quick-release bar in the girt bar.

✓ Set the emergency control-handle to the DISARMED/MANUAL position, and install the safety pin.

...
✓ Close-up
...

TASK COMPLETED

EMERGENCY ESCAPE SLIDE REMOVAL AND REPLACEMENT - PASSENGER/CREW DOOR (TYPE A) SLIDE REMOVAL PROCEDURE

This Page Intentionally Left Blank

G7508471 - G3NT1T0 - FM25Y2BASEMCE03

EQUIPMENT/FURNISHINGS SYSTEM BASE MAINTENANCE (3)

EMERGENCY ESCAPE SLIDE REMOVAL AND REPLACEMENT (continued)

PRE-FIT INSPECTION BEFORE INSTALLATION OF THE ESCAPE FACILITIES

Before installation, you must check that the pack-assembly is serviceable. If installation is at a door where the escape-slide/raft has been deployed, make sure that the diaphragm is replaced in the percussion mechanism of the door damper and emergency exit.
Make sure that emergency lights are in good condition. In the cockpit, the EMER EXIT LT switch is set to the OFF position.
To do a door maintenance, make sure that the door handle and the attached slide/raft activating system are disarmed.
Inspect the new pack-assembly, and check that the inflation reservoir is safetied.
Install the pack-assembly in front of the door. Check and clean the component interface and adjacent area.
Make sure the lighting-switch pin is correctly installed. If necessary, push it into the housing until a click is heard.
Check the gage indicates a correct pressure. Model A gage has a green cursor which is temperature sensitive and the model B gage has a needle with an internal mechanism which is temperature sensitive.
Check the release pin installation and make sure that the parachute pin is installed in the speed lacing and safetied.
Make sure that the electrical harness is correctly connected to the pack-assembly.

CAUTION: If the electrical harness is not correctly installed, it can prevent the correct inflation and/or deployment of the escape slide raft.

You can now fit the pack assembly onto the door.

Inspection and preparation of component for installation

...

Job set-up

- In the cockpit, make sure that the EMER EXIT LT switch is set to the OFF position.
- Make sure that the door is safetied:

...

Procedure

...

- Make sure that the inflation reservoir of the pack-assembly is safetied.
- Put the pack-assembly in front of the applicable door and do a visual inspection.
- Make sure that the lighting switch pin is installed correctly.
- Make sure the pressure gage indicates the correct pressure.
- Make sure that the parachute pin is installed in the speed lacing, and safetied with the safety tie.
- Install the electrical harness on the correct side of the pack-assembly.

...

Close-up

...

Note:

If installation is at a door where the escape-slide/raft has been deployed, make sure that the diaphragm is replaced in the percussion mechanism of the door damper and emergency exit.

Inspection and preparation of component for installation

...

Job set-up

- In the cockpit, make sure that the EMER EXIT LT switch is set to the OFF position.
- Make sure that the door is safetied:

...

Procedure

...

- Make sure that the inflation reservoir of the pack-assembly is safetied.
- Put the pack-assembly in front of the applicable door and do a visual inspection.
- Make sure that the lighting switch pin is installed correctly.
- Make sure the pressure gage indicates the correct pressure.
- Make sure that the parachute pin is installed in the speed lacing, and safetied with the safety tie.
- Install the electrical harness on the correct side of the pack-assembly.

...

Close-up

...

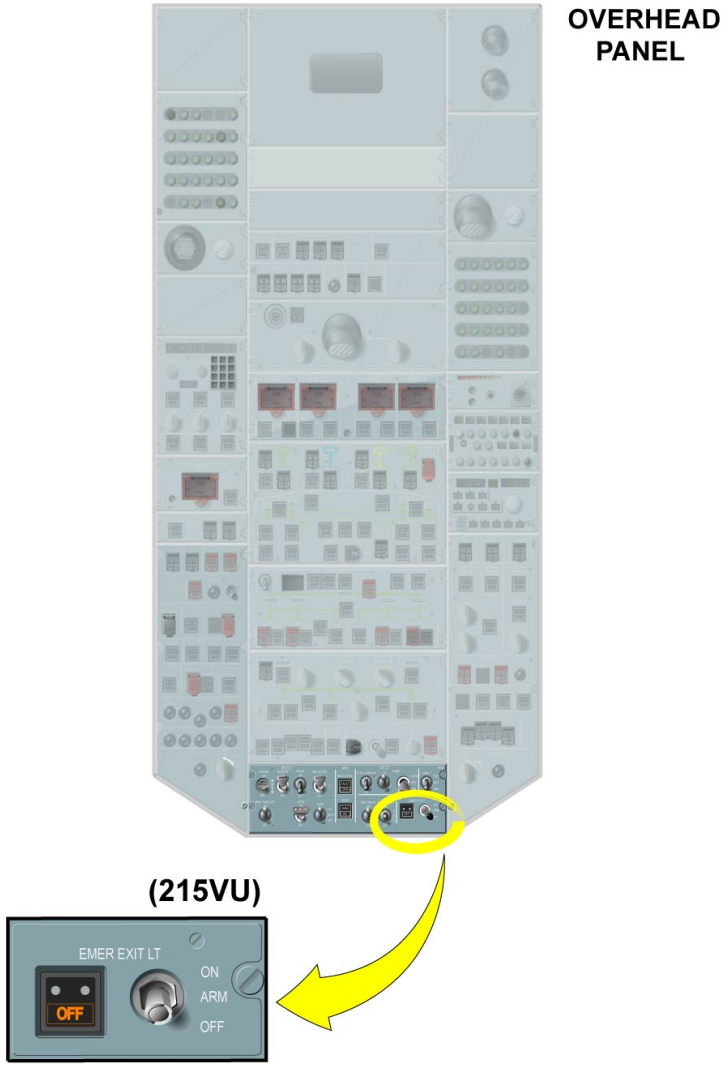

Inspection and preparation of component for installation

...

Job set-up

- ✓ **In the cockpit, make sure that the EMER EXIT LT switch is set to the OFF position.**
- ⇨ **Make sure that the door is safetied:**
  - -Make sure that the stiker lever is safetied.
  - -Make sure that the emergency control-handle is set to the DISARMED/MANUAL position, with the safety pin installed.

...

Procedure

...

- **Make sure that the inflation reservoir of the pack-assembly is safetied.**
- **Put the pack-assembly in front of the applicable door and do a visual inspection.**
- **Make sure that the lighting switch pin is installed correctly.**
- **Make sure the pressure gage indicates the correct pressure.**
- **Make sure that the parachute pin is installed in the speed lacing, and safetied with the safety tie.**
- **Install the electrical harness on the correct side of the pack-assembly.**

...

Close-up

...

STRIKER LEVER

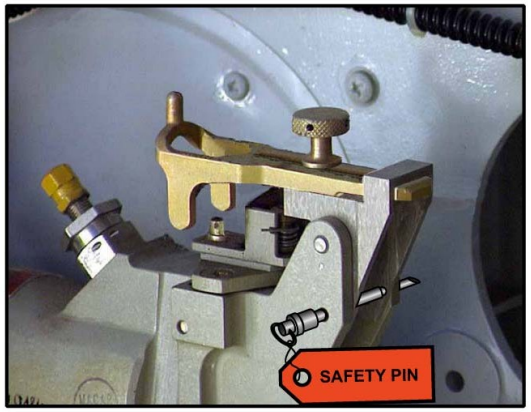

HANDLE IN DISARMED POSITION

G7508471 - G3NT1T0 - FM25Y2BASEMCE03

EMERGENCY ESCAPE SLIDE REMOVAL AND REPLACEMENT - PRE-FIT INSPECTION BEFORE INSTALLATION OF THE ESCAPE FACILITIES

Inspection and preparation of component for installation

...

✓ Job set-up

✓ In the cockpit, make sure that the EMER EXIT LT switch is set to the OFF position.

✓ Make sure that the door is safetied:

...

Procedure

...

✓ Make sure that the inflation reservoir of the pack-assembly is safetied.

⇨ Put the pack-assembly in front of the applicable door and do a visual inspection.

Make sure that the lighting switch pin is installed correctly.

Make sure the pressure gage indicates the correct pressure.

Make sure that the parachute pin is installed in the speed lacing, and safetied with the safety tie.

Install the electrical harness on the correct side of the pack-assembly.

...

Close-up

...

VALVE REGULATOR ASSEMBLY

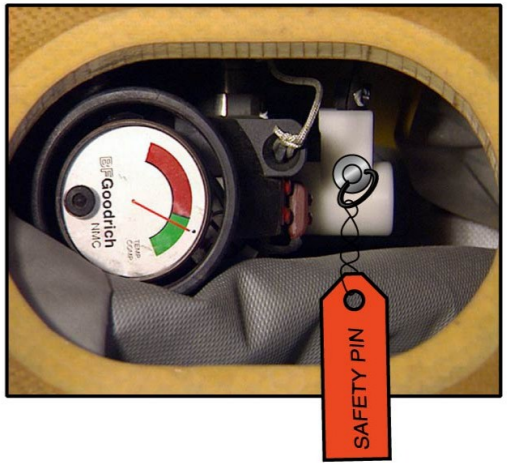

EMERGENCY ESCAPE SLIDE REMOVAL AND REPLACEMENT - PRE-FIT INSPECTION BEFORE INSTALLATION OF THE ESCAPE FACILITIES

Inspection and preparation of component for installation

...
Job set-up

- In the cockpit, make sure that the EMER EXIT LT switch is set to the OFF position.
- Make sure that the door is safetied:

...
Procedure
...

- Make sure that the inflation reservoir of the pack-assembly is safetied.
- Put the pack-assembly in front of the applicable door and do a visual inspection.
- Make sure that the lighting switch pin is installed correctly.
- Make sure the pressure gage indicates the correct pressure.
- Make sure that the parachute pin is installed in the speed lacing, and safetied with the safety tie.
- Install the electrical harness on the correct side of the pack-assembly.

...
Close-up
...

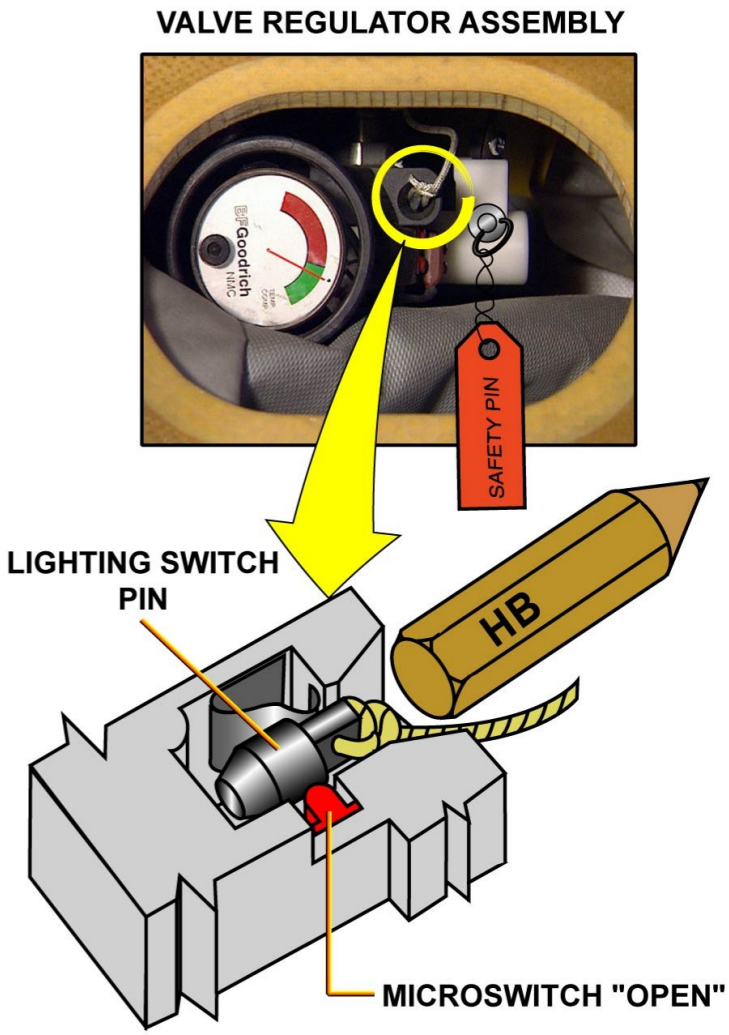

Inspection and preparation of component for installation

...

Job set-up

- In the cockpit, make sure that the EMER EXIT LT switch is set to the OFF position.
- Make sure that the door is safetied:

...

Procedure

...

- Make sure that the inflation reservoir of the pack-assembly is safetied.
- Put the pack-assembly in front of the applicable door and do a visual inspection.
- Make sure that the lighting switch pin is installed correctly.
- Make sure the pressure gage indicates the correct pressure.
- Make sure that the parachute pin is installed in the speed lacing, and safetied with the safety tie.
- Install the electrical harness on the correct side of the pack-assembly.

...

Close-up

...

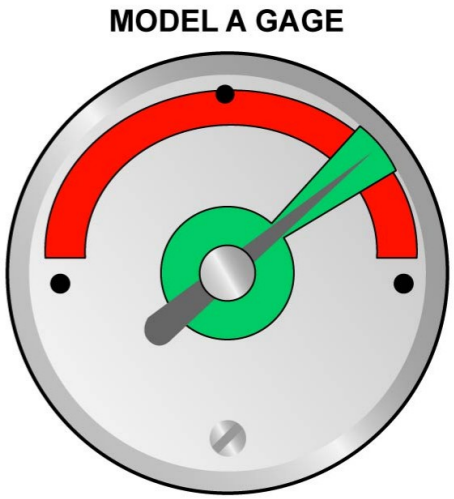

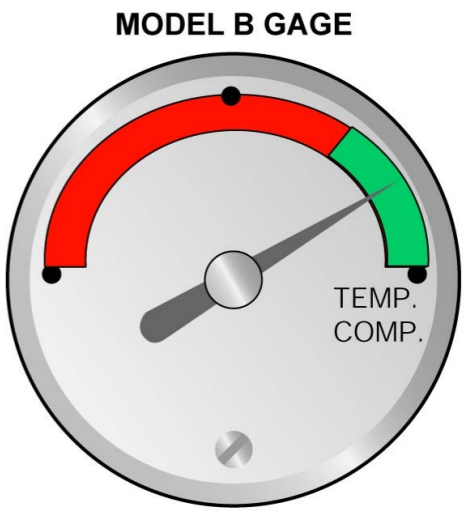

Inspection and preparation of component for installation

...

Job set-up

- In the cockpit, make sure that the EMER EXIT LT switch is set to the OFF position.
- Make sure that the door is safetied:

...

Procedure

...

- Make sure that the inflation reservoir of the pack-assembly is safetied.
- Put the pack-assembly in front of the applicable door and do a visual inspection.
- Make sure that the lighting switch pin is installed correctly.
- Make sure the pressure gage indicates the correct pressure.
- Make sure that the parachute pin is installed in the speed lacing, and safetied with the safety tie.
- Install the electrical harness on the correct side of the pack-assembly.

...

Close-up

...

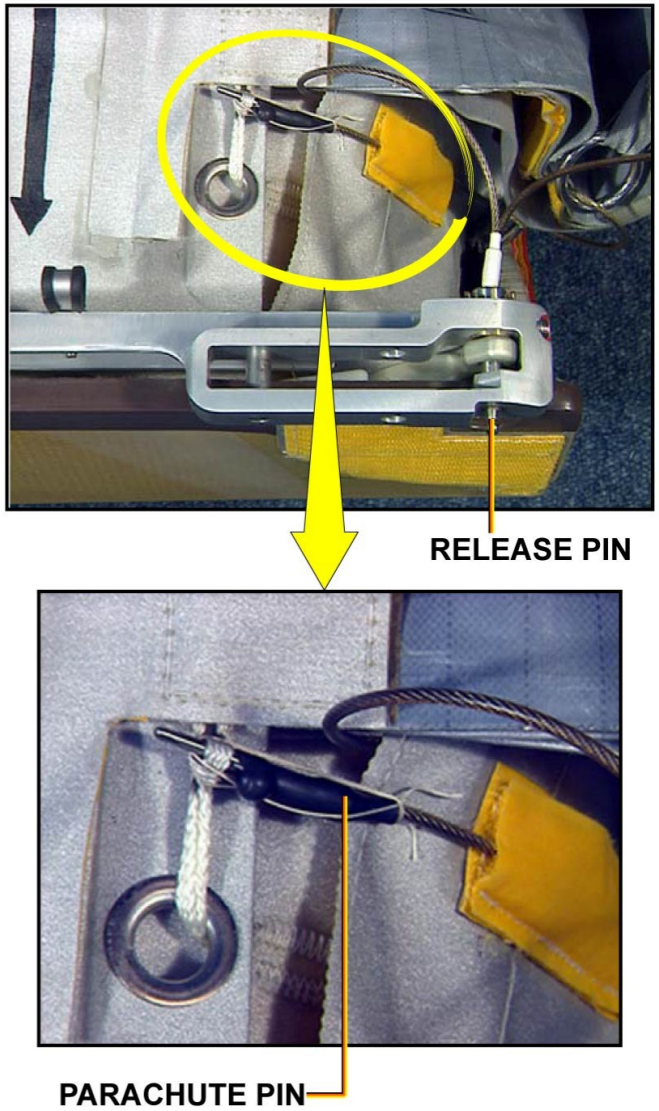

EMERGENCY ESCAPE SLIDE REMOVAL AND REPLACEMENT - PRE-FIT INSPECTION BEFORE INSTALLATION OF THE ESCAPE FACILITIES

Inspection and preparation of component for installation

...

Job set-up

- In the cockpit, make sure that the EMER EXIT LT switch is set to the OFF position.
- Make sure that the door is safetied:

...

Procedure

...

- Make sure that the inflation reservoir of the pack-assembly is safetied.
- Put the pack-assembly in front of the applicable door and do a visual inspection.
- Make sure that the lighting switch pin is installed correctly.
- Make sure the pressure gage indicates the correct pressure.
- Make sure that the parachute pin is installed in the speed lacing, and safetied with the safety tie.
- **Install the electrical harness on the correct side of the pack-assembly.**

...

Close-up

...

Note:

This step shows the electrical harness installation for the LH side of the aircraft. For the RH side, install the electrical harness in the opposite direction.

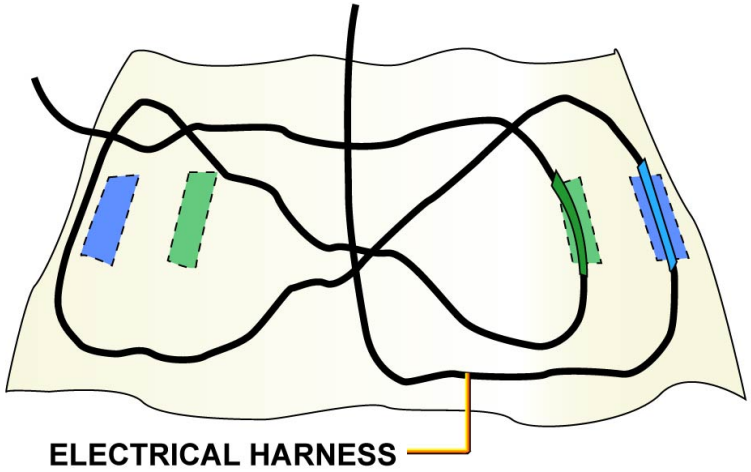

CAUTION

If the electrical harness is not corrrectly installed, it can prevent the correct inflation and/or deployment of the escape slide raft.

Inspection and preparation of component for installation

...
Job set-up

- In the cockpit, make sure that the EMER EXIT LT switch is set to the OFF position.
- Make sure that the door is safetied:

...
Procedure
...

- Make sure that the inflation reservoir of the pack-assembly is safetied.
- Put the pack-assembly in front of the applicable door and do a visual inspection.
- Make sure that the lighting switch pin is installed correctly.
- Make sure the pressure gage indicates the correct pressure.
- Make sure that the parachute pin is installed in the speed lacing, and safetied with the safety tie.
- Install the electrical harness on the correct side of the pack-assembly.

...
Close-up
...

TASK COMPLETED

G7508471 - G3NT1T0 - FM25Y2BASEMCE03

EMERGENCY ESCAPE SLIDE REMOVAL AND REPLACEMENT - PRE-FIT INSPECTION BEFORE INSTALLATION OF THE ESCAPE FACILITIES

EQUIPMENT/FURNISHINGS SYSTEM BASE MAINTENANCE (3)

EMERGENCY ESCAPE SLIDE REMOVAL AND REPLACEMENT (continued)

INSTALLATION PROCEDURE (TYPE A DOOR) FOR THE ESCAPE FACILITIES

WARNING: DURING THIS PROCEDURE, USE PROTECTIVE CLOTHING, RUBBER GLOVES, GOGGLES AND MASK BEFORE YOU APPLY SPECIFIC MATERIALS. DO NOT PULL THE GIRT ASSEMBLY. IF YOU DO SO, YOU WILL OPEN THE PACK-ASSEMBLY.

Remove the slide safety pin, and set the control handle to the ARMED/AUTOMATIC position. Remove the quick-release bar from the door by pushing the release lever.

Carefully push the quick-release bar into the girt assembly.

To install the pack-assembly onto the door, connect the electrical connector, lift the pack and engage the release rails onto the hooks.

The pack must be secured by screws with specific materials.

Install the quick-release bar into the girt bar and pull the release lever away from the door to lock it in position.

Then set the emergency control handle to the DISARMED/MANUAL position and secure it with the slide safety pin.

Do a visual check of the installation:

- girt assembly attached with burr-strip,
- girt bar attached with lockjaw.

Perform an operational test of the emergency lights and test the escape facilities pressure indication on the Flight Attendant Panel (FAP).

If no other equipment/furnishings tasks have to be performed, the area can be closed, making sure that all tools, test and support used during this procedure have been removed.

Installation of the escape-slide raft pack-assembly

...
Job set-up
...
Procedure
...

- Remove the quick-release bar from the girt bar.
- Install the quick-release bar in the girt assembly.
- Install the pack-assembly on the door.
- Install the quick-release bar in the girt bar and attach the girt assembly with the burr-strip to the bottom of the pack-assembly.
- Set the emergency control-handle to the DISARMED/MANUAL position and install the safety-pin.
- Do after installation the detailed visual inspection.
- Make the test of the escape-facilities monitoring.

...
Close-up
...

WARNING DURING THIS PROCEDURE, USE PROTECTIVE CLOTHING, RUBBER GLOVES, GOGGLES AND MASK BEFORE YOU APPLY SPECIFIC MATERIALS.
DO NOT PULL THE GIRT ASSEMBLY. IF YOU DO SO, YOU WILL OPEN THE PACK-ASSEMBLY.

G7508471 - G3NT1T0 - FM25Y2BASEMCE03

EMERGENCY ESCAPE SLIDE REMOVAL AND REPLACEMENT - INSTALLATION PROCEDURE (TYPE A DOOR) FOR THE ESCAPE FACILITIES

Installation of the escape-slide raft pack-assembly

...
✓ Job set-up
...
Procedure
...

- ⇨ Remove the quick-release bar from the girt bar.
- Install the quick-release bar in the girt assembly.
- Install the pack-assembly on the door.
- Install the quick-release bar in the girt bar and attach the girt assembly with the burr-strip to the bottom of the pack-assembly.
- Set the emergency control-handle to the DISARMED/MANUAL position and install the safety-pin.
- Do after installation the detailed visual inspection.
- Make the test of the escape-facilities monitoring.

...
Close-up
...

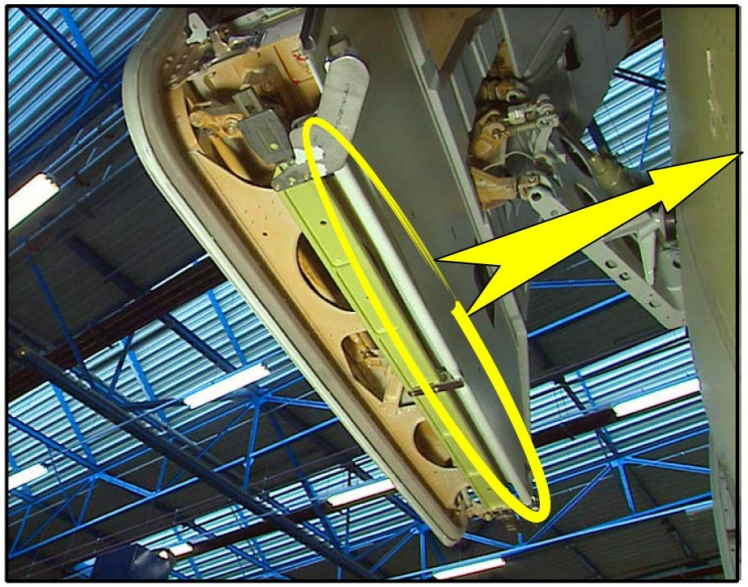

HANDLE IN THE ARMED POSITION

Installation of the escape-slide raft pack-assembly

...
Job set-up
...
Procedure
...

- ✓ Remove the quick-release bar from the girt bar.
- ➡ Install the quick-release bar in the girt assembly.
- Install the pack-assembly on the door.
- Install the quick-release bar in the girt bar and attach the girt assembly with the burr-strip to the bottom of the pack-assembly.
- Set the emergency control-handle to the DISARMED/MANUAL position and install the safety-pin.
- Do after installation the detailed visual inspection.
- Make the test of the escape-facilities monitoring.

...
Close-up
...

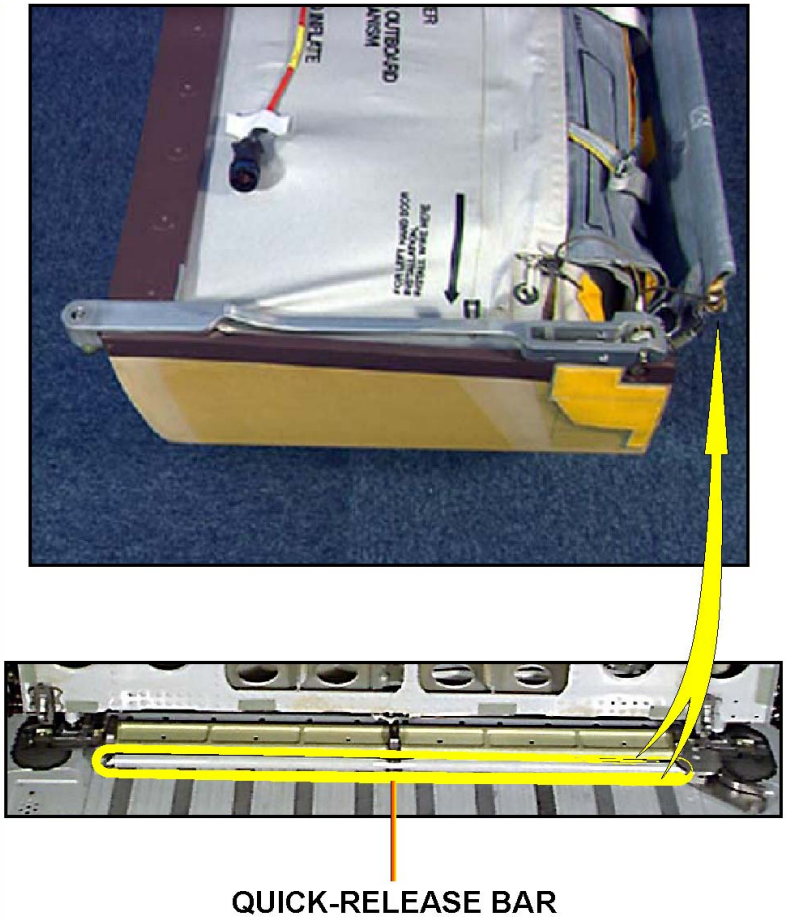

G7508471 - G3NT1T0 - FM25Y2BASEMCE03

EMERGENCY ESCAPE SLIDE REMOVAL AND REPLACEMENT - INSTALLATION PROCEDURE (TYPE A DOOR) FOR THE ESCAPE FACILITIES

Installation of the escape-slide raft pack-assembly

...

✓ **Job set-up**

...

Procedure

...

✓ **Remove the quick-release bar from the girt bar.**

✓ **Install the quick-release bar in the girt assembly.**

⇨ **Install the pack-assembly on the door.**

Install the quick-release bar in the girt bar and attach the girt assembly with the burr-strip to the bottom of the pack-assembly.

Set the emergency control-handle to the DISARMED/MANUAL position and install the safety-pin.

Do after installation the detailed visual inspection.

Make the test of the escape-facilities monitoring.

...

Close-up

...

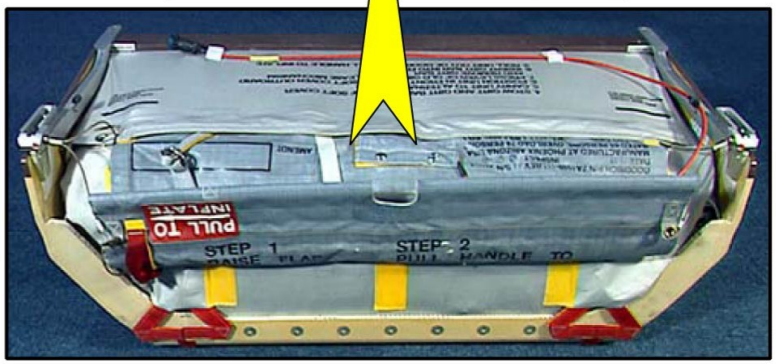

EMERGENCY ESCAPE SLIDE REMOVAL AND REPLACEMENT - INSTALLATION PROCEDURE (TYPE A DOOR) FOR THE ESCAPE FACILITIES

Installation of the escape-slide raft pack-assembly

...
Job set-up
...
Procedure
...

- Remove the quick-release bar from the girt bar.
- Install the quick-release bar in the girt assembly.
- Install the pack-assembly on the door.
- Install the quick-release bar in the girt bar and attach the girt assembly with the burr-strip to the bottom of the pack-assembly.
- Set the emergency control-handle to the DISARMED/MANUAL position and install the safety-pin.
- Do after installation the detailed visual inspection.
- Make the test of the escape-facilities monitoring.

...
Close-up
...

RELEASE LEVER IN LOCKED POSITION

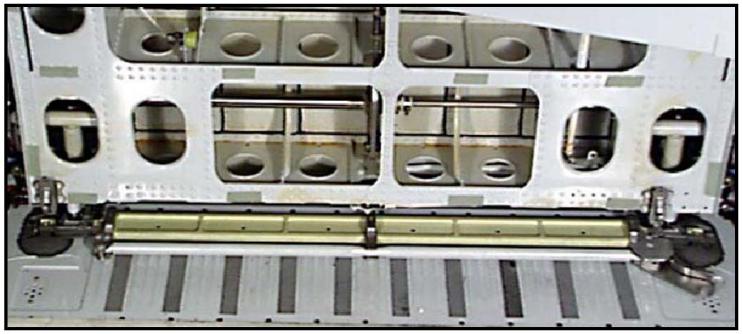

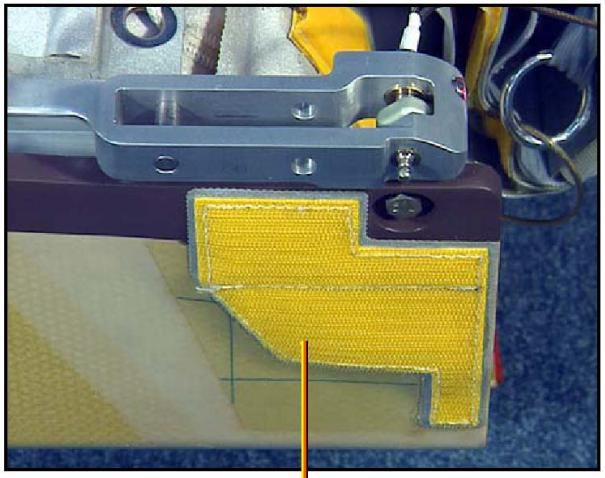

Installation of the escape-slide raft pack-assembly

...
Job set-up
...
Procedure
...

- Remove the quick-release bar from the girt bar.
- Install the quick-release bar in the girt assembly.
- Install the pack-assembly on the door.
- Install the quick-release bar in the girt bar and attach the girt assembly with the burr-strip to the bottom of the pack-assembly.
- Set the emergency control-handle to the DISARMED/MANUAL position and install the safety-pin.
- Do after installation the detailed visual inspection.
- Make the test of the escape-facilities monitoring.

...
Close-up
...

HANDLE IN THE DISARMED POSITION

Installation of the escape-slide raft pack-assembly

...
✓ Job set-up
...
Procedure
...

- ✓ Remove the quick-release bar from the girt bar.
- ✓ Install the quick-release bar in the girt assembly.
- ✓ Install the pack-assembly on the door.
- ✓ Install the quick-release bar in the girt bar and attach the girt assembly with the burr-strip to the bottom of the pack-assembly.
- ✓ Set the emergency control-handle to the DISARMED/MANUAL position and install the safety-pin.
- ✓ Do after installation the detailed visual inspection.
- ⇨ Make the test of the escape-facilities monitoring.

...
Close-up
...

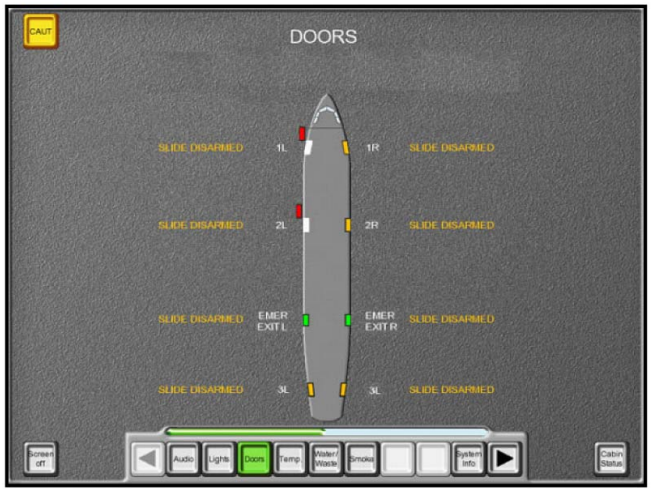

EXAMPLE OF AN A330 FAP DOOR PAGE

EMERGENCY ESCAPE SLIDE REMOVAL AND REPLACEMENT - INSTALLATION PROCEDURE (TYPE A DOOR) FOR THE ESCAPE FACILITIES

Installation of the escape-slide raft pack-assembly

...
✓ Job set-up
...
✓ Procedure
...

- ✓ Remove the quick-release bar from the girt bar.
- ✓ Install the quick-release bar in the girt assembly.
- ✓ Install the pack-assembly on the door.
- ✓ Install the quick-release bar in the girt bar and attach the girt assembly with the burr-strip to the bottom of the pack-assembly.
- ✓ Set the emergency control-handle to the DISARMED/MANUAL position and install the safety-pin.
- ✓ Do after installation the detailed visual inspection.
- ✓ Make the test of the escape-facilities monitoring.

...
✓ Close-up
...

TASK COMPLETED

This Page Intentionally Left Blank

G7508471 - G3NT1T0 - FM25Y2BASEMCE03

EQUIPMENT/FURNISHINGS SYSTEM BASE MAINTENANCE (3)

EMERGENCY ESCAPE SLIDE REMOVAL AND REPLACEMENT (continued)

EXIT DOOR (TYPE 1) SLIDE REMOVAL AND REPLACEMENT

The procedure for removal and installation is similar to a Type A door.

G7508471 - G3NT1T0 - FM25Y2BASEMCE03

NOTE:

REFER TO A/C MAINTENANCE MANUAL TASK:

ESCAPE FACILITIES - EMERGENCY EXIT (TYPE 1) - REMOVAL/INSTALLATION.

EMERGENCY ESCAPE SLIDE REMOVAL AND REPLACEMENT - EXIT DOOR (TYPE 1) SLIDE REMOVAL AND REPLACEMENT

EQUIPMENT/FURNISHINGS SYSTEM BASE MAINTENANCE (3)

DOOR AREA HEATING SYSTEM MAINTENANCE

DOOR AREA HEATING SYSTEM BITE

The heated floor panel system can be tested through the MCDU.
On the MCDU, perform the GND SCANNING in CABIN menu, wait 180 s. Make sure that the "NO FAULT DETECTED" messages comes on.
If no other equipment/furnishing tasks have to be performed, the area can be closed, making sure that all tools, test and support used during this procedure have been removed.

Bite test of the door area heating system
...
Job set-up
...
Procedure
...
Do this test:
...
Close-up
...

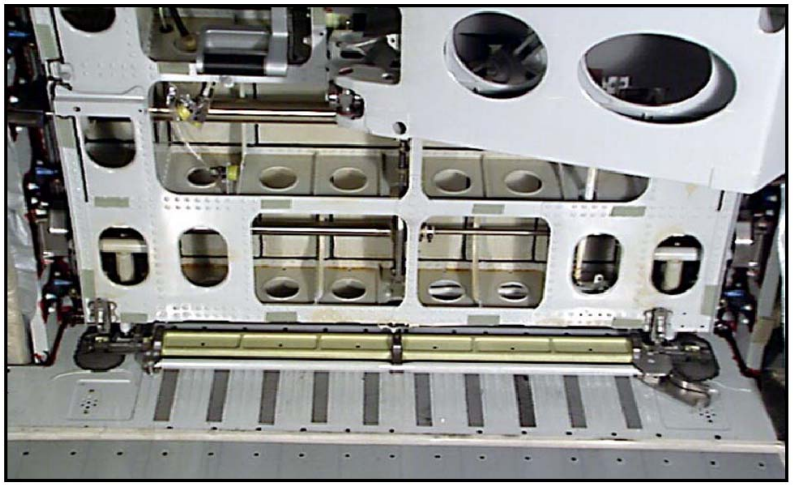

HEATED FLOOR PANEL

Bite test of the door area heating system

...

Job set-up

...

Procedure

...

Do this test:

ACTION	RESULT
1. In the cockpit, on the MCDU: - Push the CIDS1 line select key.	In the cockpit, on the MCDU: - The CIDS1 page comes on.
2. In the cockpit, on the MCDU: - Push the GND SCANNING line select key.	In the cockpit, on the MCDU: - The CIDS1 GND SCANNING page comes on. NOTE: Wait approx. 180 sec. to make sure that you get the correct system status. - after approx. 180 sec. make sure that "NO FAULT DETECTED" message comes on.

...

Close-up

...

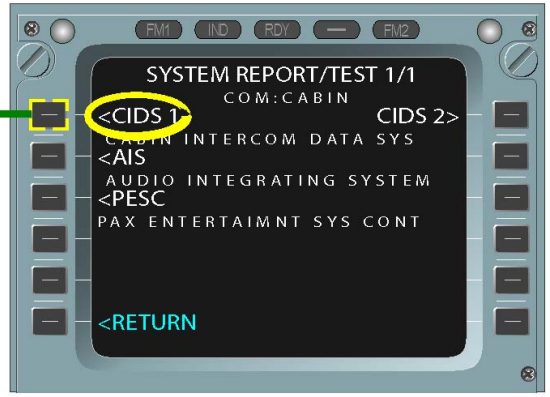

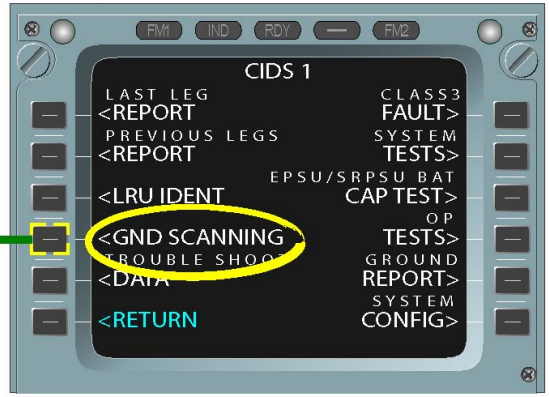

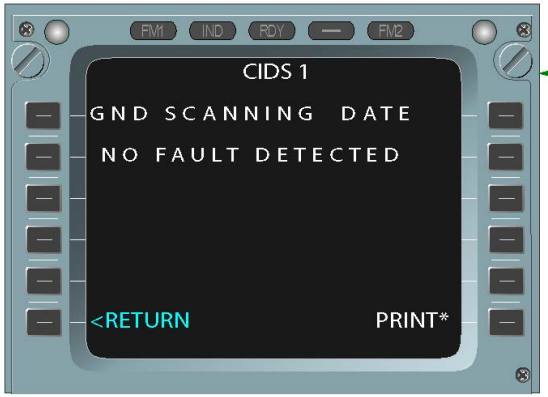

Normally CIDS DIRECTOR 1 is the active computer and CIDS DIRECTOR 2 is the sandby computer.

DOOR AREA HEATING SYSTEM MAINTENANCE - DOOR AREA HEATING SYSTEM BITE

Bite test of the door area heating system

...

✓ **Job set-up**

...

✓ **Procedure**

...

✓ **Do this test:**

...

✓ **Close-up**

...

TASK COMPLETED

G7508471 - G3NT1T0 - FM25Y2BASEMCE03

DOOR AREA HEATING SYSTEM MAINTENANCE - DOOR AREA HEATING SYSTEM BITE

LININGS & FURNISHINGS REMOVAL/INSTALLATION (3)

DADO PANELS

REMOVAL OF THE DADO PANELS

NOTE: this procedure is the same for all types of Dado panels.
Release the studs with a spike.
Pull the Dado panel in the inboard direction to release it from the support.
Carefully remove the Dado panel.

G7508471 - G3NT1T0 - FM25Y3000000001

Removal of the Dado panels

...

✓ **Job set-up**

...

Procedure

...

⇨ **Release the studs with a spike.**

Pull the Dado panel in the inboard direction to release it from the support.

NOTE: this procedure is the same for all types of Dado panels.

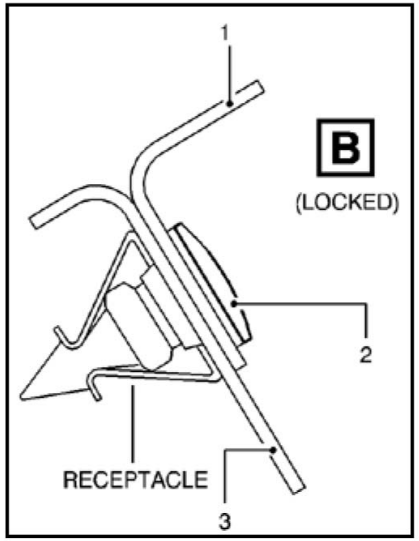

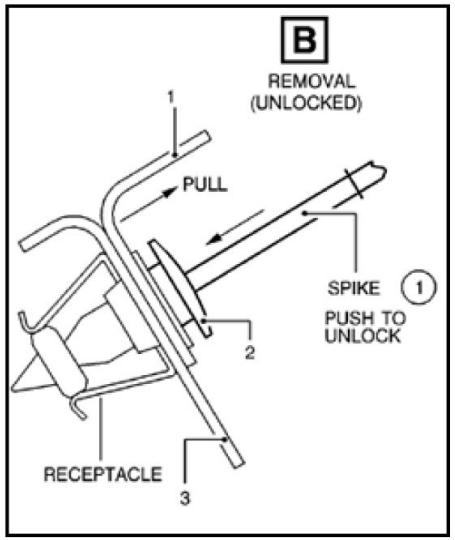

DADO PANELS - REMOVAL OF THE DADO PANELS

Removal of the Dado panels

...

✓ **Job set-up**

...

Procedure

...

✓ **Release the studs with a spike.**

⇨ **Pull the Dado panel in the inboard direction to release it from the support.**

DADO PANELS - REMOVAL OF THE DADO PANELS

Removal of the Dado panels

...

✓ **Job set-up**

...

✓ **Procedure**

...

✓ **Release the studs with a spike.**

✓ **Pull the Dado panel in the inboard direction to release it from the support.**

TASK COMPLETED

DADO PANELS - REMOVAL OF THE DADO PANELS

LININGS & FURNISHINGS REMOVAL/INSTALLATION (3)

DADO PANELS (continued)

INSTALLATION OF THE DADO PANELS

NOTE: this procedure is the same for all types of Dado panels.
Make sure that the work area is clean and clear of tools and other items.
Carefully push the Dado panels in the outboard direction to engage it on the pins of the support.
Push the studs in until they lock into the floor angle.

G7508471 - G3NT1T0 - FM25Y3000000001

Installation of the Dado panels

...

✓ **Job set-up**

...

Procedure

...

Make sure that the work area is clean and clear of tools and other items.

Carefully push the Dado panels in the outboard direction to engage it on the pins of the support.

Push the studs in until they lock into the floor angle.

...

Close-up

NOTE: this procedure is the same for all types of Dado panels.

DADO PANELS - INSTALLATION OF THE DADO PANELS

Installation of the Dado panels

...

✓ **Job set-up**

...

Procedure

...

✓ **Make sure that the work area is clean and clear of tools and other items.**

➡ **Carefully push the Dado panels in the outboard direction to engage it on the pins of the support.**

Push the studs in until they lock into the floor angle.

...

Close-up

DADO PANELS - INSTALLATION OF THE DADO PANELS

G7508471 - G3NT1T0 - FM25Y3000000001

Installation of the Dado panels

...

✓ **Job set-up**

...

Procedure

...

✓ **Make sure that the work area is clean and clear of tools and other items.**

✓ **Carefully push the Dado panels in the outboard direction to engage it on the pins of the support.**

➡ **Push the studs in until they lock into the floor angle.**

...

Close-up

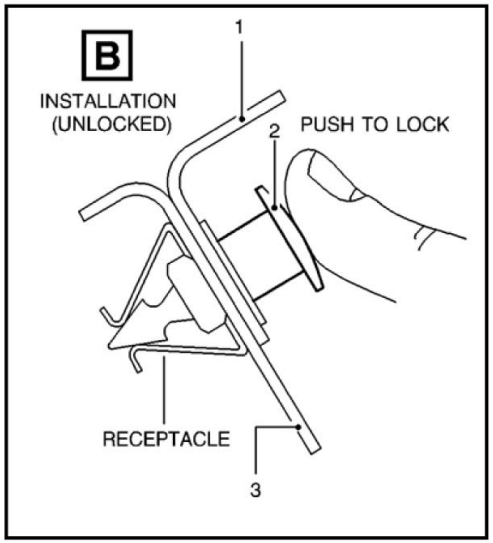

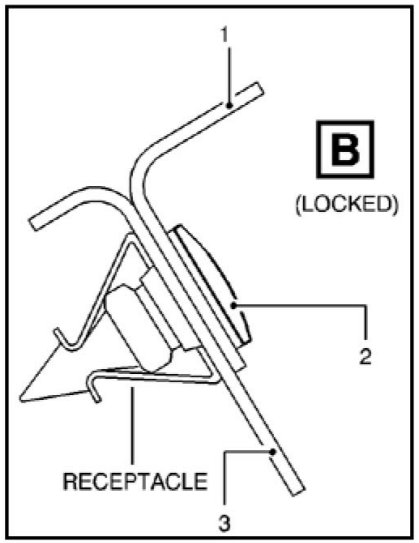

DADO PANELS - INSTALLATION OF THE DADO PANELS

G7508471 - G3NT1T0 - FM25Y3000000001

Installation of the Dado panels

...

✓ **Job set-up**

...

Procedure

...

✓ **Make sure that the work area is clean and clear of tools and other items.**

✓ **Carefully push the Dado panels in the outboard direction to engage it on the pins of the support.**

✓ **Push the studs in until they lock into the floor angle.**

...

✓ **Close-up**

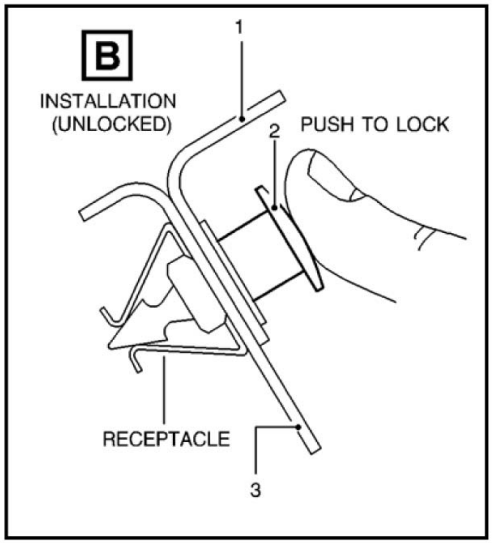

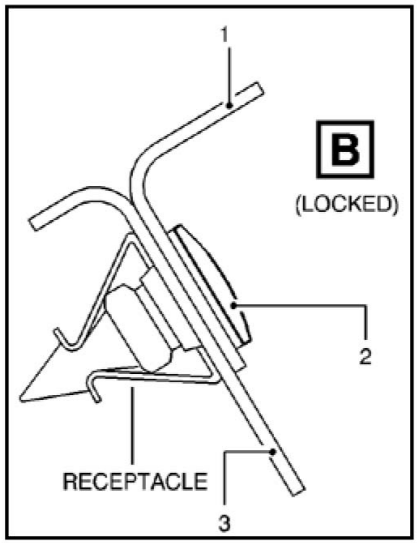

TASK COMPLETED

DADO PANELS - INSTALLATION OF THE DADO PANELS

G7508471 - G3NT1T0 - FM25Y300000001

This Page Intentionally Left Blank

G7508471 - G3NT1T0 - FM25Y3000000001

LININGS & FURNISHINGS REMOVAL/INSTALLATION (3)

SIDEWALL PANELS

REMOVAL OF THE SIDEWALL PANEL

NOTE: the removal procedure is applicable for the LH and RH sidewall panels and for all types of the sidewall panels.

Pull the infillstrips out at the top of the sidewall panel.

Remove the screws at the top of the sidewall panel.

Carefully pull the sidewall panel inboard to release the retainers from the support.

Remove the sidewall panel.

G7508471 - G3NT1T0 - FM25Y3000000001

Removal of the Sidewall panels

...

✓ **Job set-up**

...

Procedure

...

- **Pull the infillstrips out at the top of the sidewall panel.**
- **Remove the screws at the top of the sidewall panel.**
- **Carefully pull the sidewall panel inboard to release the retainers from the support.**
- **Remove the sidewall panel.**

NOTE: the removal procedure is applicable for the LH and RH Sidewall panels and for all types of the Sidewall panels.

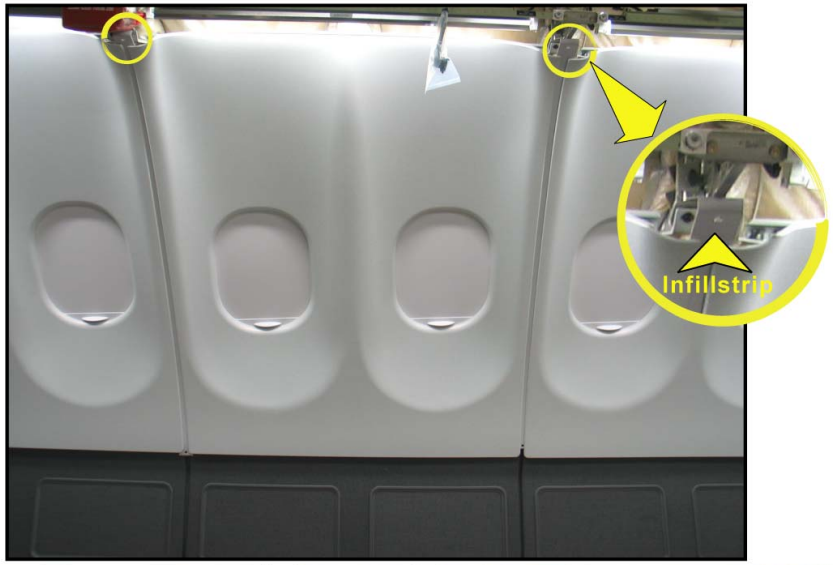

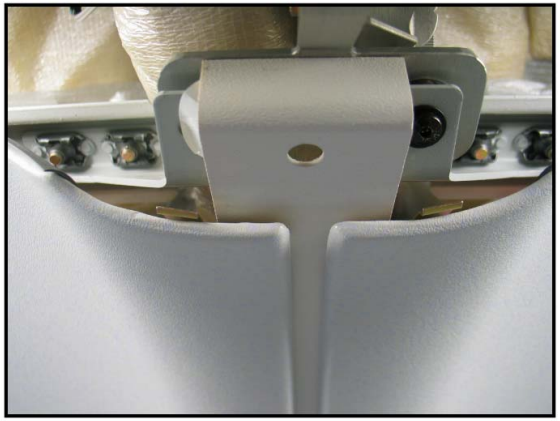

SIDEWALL PANELS - REMOVAL OF THE SIDEWALL PANEL

Removal of the Sidewall panels

...

✓ **Job set-up**

...

Procedure

...

✓ **Pull the infillstrips out at the top of the sidewall panel.**

⇨ **Remove the screws at the top of the sidewall panel.**

Carefully pull the sidewall panel inboard to release the retainers from the support.

Remove the sidewall panel.

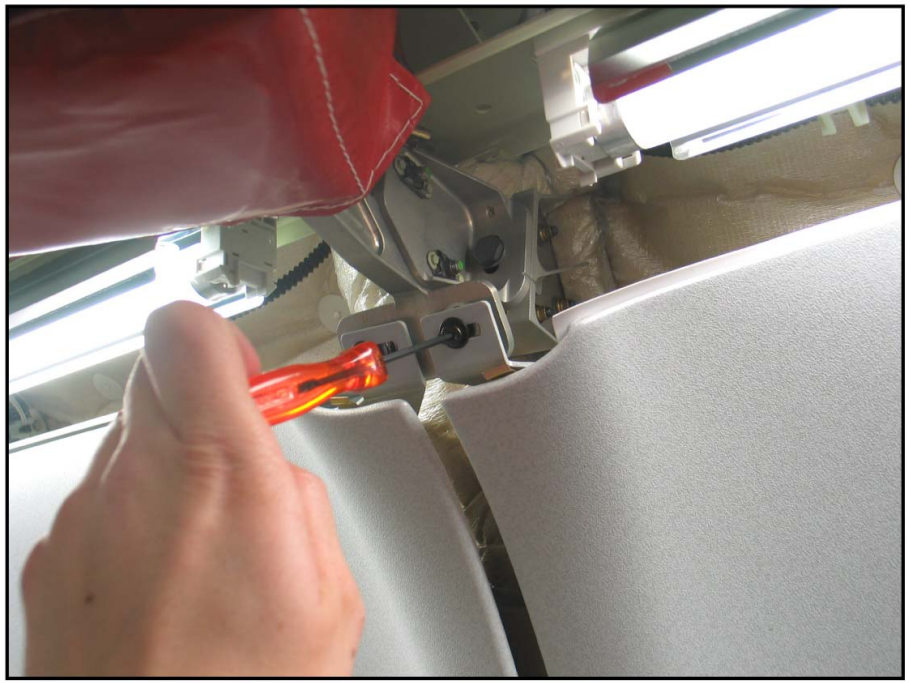

SIDEWALL PANELS - REMOVAL OF THE SIDEWALL PANEL

G7508471 - G3NT1T0 - FM25Y3000000001

Removal of the Sidewall panels

...

✓ **Job set-up**

...

Procedure

...

✓ Pull the infillstrips out at the top of the sidewall panel.

✓ Remove the screws at the top of the sidewall panel.

⇨ Carefully pull the sidewall panel inboard to release the retainers from the support.

Remove the sidewall panel.

SIDEWALL PANELS - REMOVAL OF THE SIDEWALL PANEL

Removal of the Sidewall panels

...

✓ **Job set-up**

...

Procedure

...

✓ Pull the infillstrips out at the top of the sidewall panel.

✓ Remove the screws at the top of the sidewall panel.

✓ Carefully pull the sidewall panel inboard to release the retainers from the support.

➡ Remove the sidewall panel.

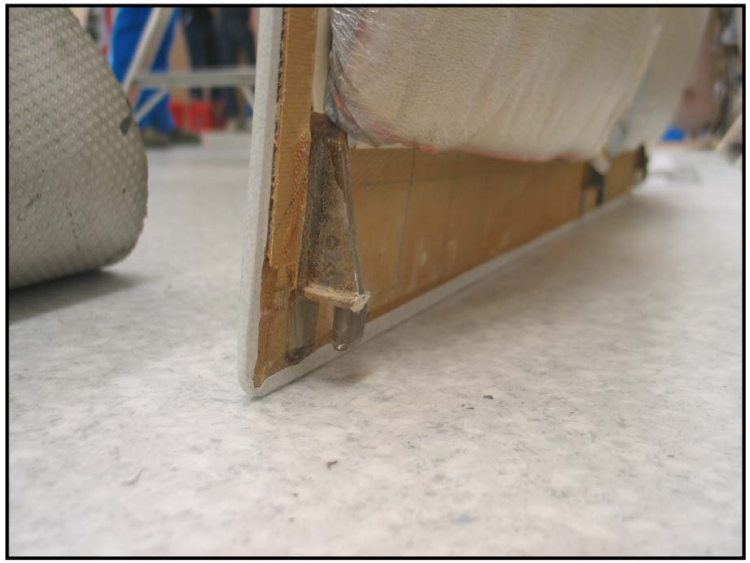

SIDEWALL PANELS - REMOVAL OF THE SIDEWALL PANEL

Removal of the Sidewall panels

...

✓ **Job set-up**

...

✓ **Procedure**

...

✓ Pull the infillstrips out at the top of the sidewall panel.

✓ Remove the screws at the top of the sidewall panel.

✓ Carefully pull the sidewall panel inboard to release the retainers from the support.

✓ Remove the sidewall panel.

TASK COMPLETED

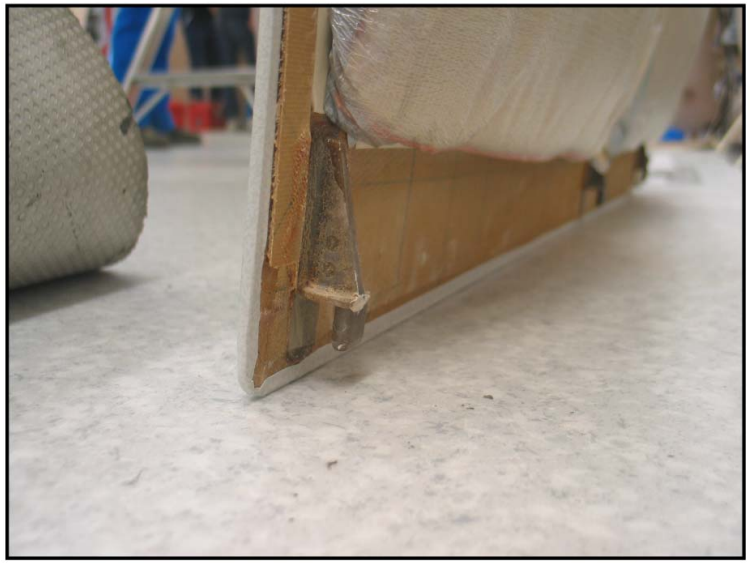

SIDEWALL PANELS - REMOVAL OF THE SIDEWALL PANEL

LININGS & FURNISHINGS REMOVAL/INSTALLATION (3)

SIDEWALL PANELS (continued)

INSTALLATION OF THE SIDEWALL PANELS

NOTE: the installation procedure is applicable for the LH and RH sidewall panels and for all types of sidewall panels.

Make sure that the work area is clean and clear of tools and other items.

Make sure the window foam ring is properly installed.

Push the sidewall panel down to engage the retainers in the support.

Install and tighten the screws at the top of the sidewall panel.

Install the infillstrips at the top and between the sidewall panels.

Check the clearance between the two-sidewall panels (10.0+2.0-2.0 mm).

G7508471 - G3NT1T0 - FM25Y3000000001

Installation of the Sidewall panels

...

✓ **Job set-up**

...

Procedure

...

- **Make sure that the work area is clean and clear of tools and other items.**
- **Make sure the window foam ring is properly installed.**
- **Push the sidewall panel down to engage the retainers in the support.**
- **Install and tighten the screws at the top of the sidewall panel.**
- **Install the infillstrips at the top and between the sidewall panels.**
- **Check the clearance between the two-sidewall panels (10.0+2.0-2.0 mm).**

...

Close-up

NOTE: the installation procedure is applicable for the LH and RH sidewall panels and for all types of sidewall panels.

SIDEWALL PANELS - INSTALLATION OF THE SIDEWALL PANELS

Installation of the Sidewall panels

...

✓ **Job set-up**

...

Procedure

...

✓ Make sure that the work area is clean and clear of tools and other items.

⇨ **Make sure the window foam ring is properly installed.**

Push the sidewall panel down to engage the retainers in the support.

Install and tighten the screws at the top of the sidewall panel.

Install the infillstrips at the top and between the sidewall panels.

Check the clearance between the two-sidewall panels (10.0+2.0-2.0 mm).

...

Close-up

SIDEWALL PANELS - INSTALLATION OF THE SIDEWALL PANELS

Installation of the Sidewall panels

...

✓ **Job set-up**

...

Procedure

...

✓ Make sure that the work area is clean and clear of tools and other items.

✓ Make sure the window foam ring is properly installed.

⇨ Push the sidewall panel down to engage the retainers in the support.

Install and tighten the screws at the top of the sidewall panel.

Install the infillstrips at the top and between the sidewall panels.

Check the clearance between the two-sidewall panels (10.0+2.0-2.0 mm).

...

Close-up

SIDEWALL PANELS - INSTALLATION OF THE SIDEWALL PANELS

Installation of the Sidewall panels

...

✓ **Job set-up**

...

Procedure

...

✓ Make sure that the work area is clean and clear of tools and other items.

✓ Make sure the window foam ring is properly installed.

✓ Push the sidewall panel down to engage the retainers in the support.

⇨ Install and tighten the screws at the top of the sidewall panel.

Install the infillstrips at the top and between the sidewall panels.

Check the clearance between the two-sidewall panels (10.0+2.0-2.0 mm).

...

Close-up

SIDEWALL PANELS - INSTALLATION OF THE SIDEWALL PANELS

Installation of the Sidewall panels

...

✓ **Job set-up**

...

Procedure

...

- ✓ Make sure that the work area is clean and clear of tools and other items.
- ✓ Make sure the window foam ring is properly installed.
- ✓ Push the sidewall panel down to engage the retainers in the support.
- ✓ Install and tighten the screws at the top of the sidewall panel.
- ➡ Install the infillstrips at the top and between the sidewall panels.
- Check the clearance between the two-sidewall panels (10.0+2.0-2.0 mm).

...

Close-up

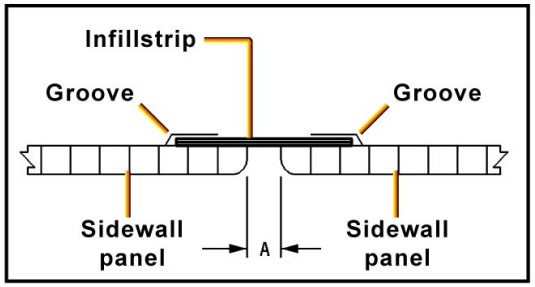

SIDEWALL PANELS - INSTALLATION OF THE SIDEWALL PANELS

Installation of the Sidewall panels

...

✓ **Job set-up**

...

Procedure

...

- ✓ Make sure that the work area is clean and clear of tools and other items.
- ✓ Make sure the window foam ring is properly installed.
- ✓ Push the sidewall panel down to engage the retainers in the support.
- ✓ Install and tighten the screws at the top of the sidewall panel.
- ✓ Install the infillstrips at the top and between the sidewall panels.
- ➡ **Check the clearance between the two-sidewall panels (10.0+2.0-2.0 mm).**

...

Close-up

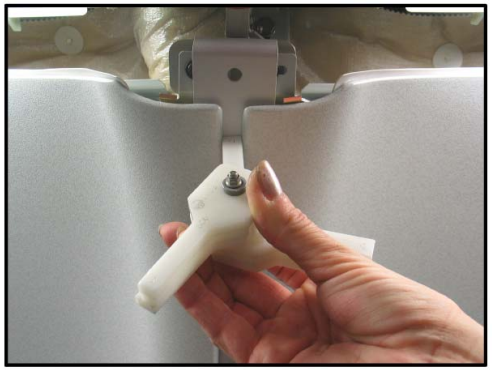

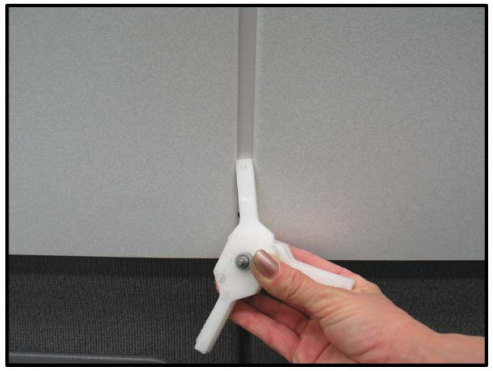

SIDEWALL PANELS - INSTALLATION OF THE SIDEWALL PANELS

Installation of the Sidewall panels

...

✓ Job set-up

...

✓ Procedure

...

- ✓ Make sure that the work area is clean and clear of tools and other items.
- ✓ Make sure the window foam ring is properly installed.
- ✓ Push the sidewall panel down to engage the retainers in the support.
- ✓ Install and tighten the screws at the top of the sidewall panel.
- ✓ Install the infillstrips at the top and between the sidewall panels.
- ✓ Check the clearance between the two-sidewall panels (10.0+2.0-2.0 mm).

...

✓ Close-up

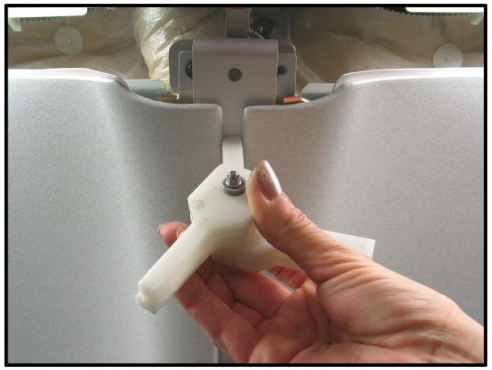

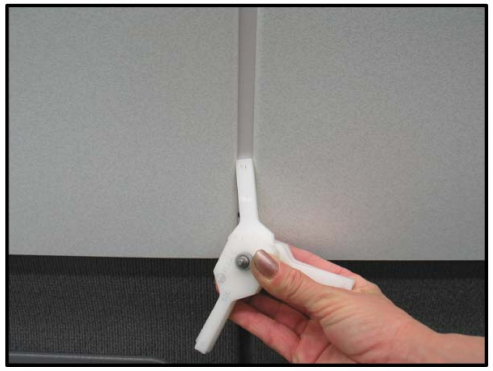

TASK COMPLETED

SIDEWALL PANELS - INSTALLATION OF THE SIDEWALL PANELS

LININGS & FURNISHINGS REMOVAL/INSTALLATION (3)

LIGHT COVERS

REMOVAL OF THE LIGHT COVERS

NOTE: the removal procedure of the lateral light covers is the same for the left and the right sides.

Remove the plastic covers from the quick release fasteners, without using a sharp tool.

Loosen the quick release fasteners.

Carefully remove the lateral light cover towards the inboard direction.

G7508471 - G3NT1T0 - FM25Y3000000001

Removal of the light covers

...

✓ **Job set-up**

...

Procedure

...

⇨ **Remove the plastic covers from the quick release fasteners, without using a sharp tool.**

Loosen the quick release fasteners.

Carefully remove the lateral light cover towards the inboard direction.

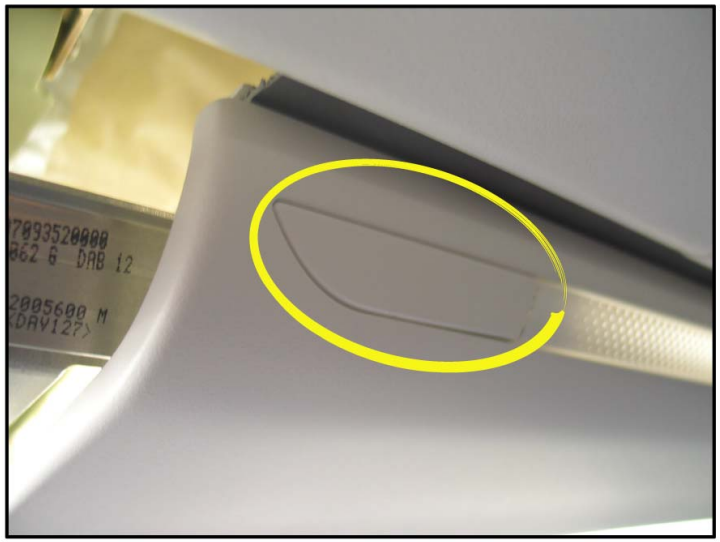

NOTE: the removal procedure of the lateral light covers is the same for the left and the right sides.

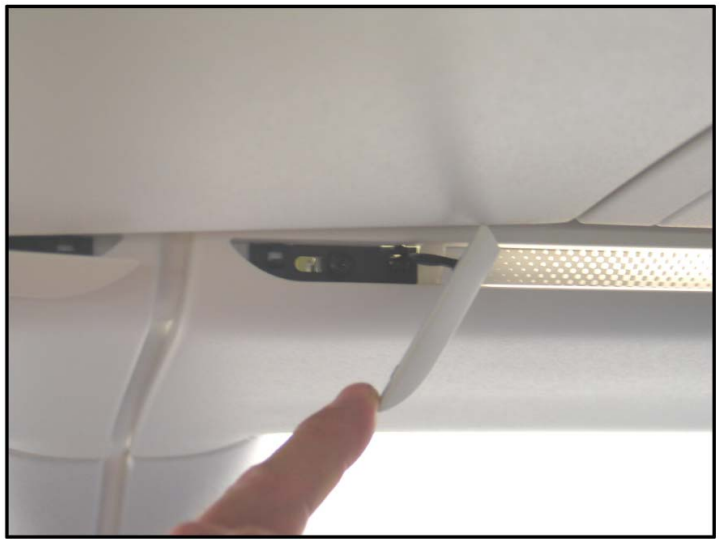

LIGHT COVERS - REMOVAL OF THE LIGHT COVERS

Removal of the light covers

...

✓ **Job set-up**

...

Procedure

...

✓ **Remove the plastic covers from the quick release fasteners, without using a sharp tool.**

➡ **Loosen the quick release fasteners.**

Carefully remove the lateral light cover towards the inboard direction.

LIGHT COVERS - REMOVAL OF THE LIGHT COVERS

Removal of the light covers

...

✓ **Job set-up**

...

Procedure

...

✓ **Remove the plastic covers from the quick release fasteners, without using a sharp tool.**

✓ **Loosen the quick release fasteners.**

➡ **Carefully remove the lateral light cover towards the inboard direction.**

LIGHT COVERS - REMOVAL OF THE LIGHT COVERS

Removal of the light covers

...

✓ **Job set-up**

...

✓ **Procedure**

...

✓ **Remove the plastic covers from the quick release fasteners, without using a sharp tool.**

✓ **Loosen the quick release fasteners.**

✓ **Carefully remove the lateral light cover towards the inboard direction.**

TASK COMPLETED

LIGHT COVERS - REMOVAL OF THE LIGHT COVERS

This Page Intentionally Left Blank

G7508471 - G3NT1T0 - FM25Y3000000001

LININGS & FURNISHINGS REMOVAL/INSTALLATION (3)

LIGHT COVERS (continued)

INSTALLATION OF THE LIGHT COVERS

Make sure that the work area is clean and clear of tools and other items.
Carefully put the lateral light cover in position. Slide the lower part between the sidewall panel and the clips.
Fasten the quick release fasteners and put the plastic covers back.
Make sure that:
- the lateral light cover is correctly attached,
- there is a sufficient overlap of the sealing lips,
- the sealing lips are not twisted,
- there is a sufficient gap to the adjacent lateral light covers,
- the gap between the lateral light covers is in line with the gap between the adjacent sidewall linings.

G7508471 - G3NT1T0 - FM25Y3000000001

Installation of the light covers

...

✓ **Job set-up**

...

Procedure

...

Make sure that the work area is clean and clear of tools and other items.

Carefully put the lateral light cover in position. Slide the lower part between the sidewall panel and the clips.

Fasten the quick release fasteners and put the plastic covers back.

Make sure that:
- **the lateral light cover is correctly attached,**
- **there is a sufficient overlap of the sealing lips,**
- **the sealing lips are not twisted,**
- **there is a sufficient gap to the adjacent lateral light covers,**
- **the gap between the lateral light covers is in line with the gap between the adjacent sidewall linings.**

...

Close-up

LIGHT COVERS - INSTALLATION OF THE LIGHT COVERS

Installation of the light covers

...

✓ **Job set-up**

...

Procedure

...

✓ **Make sure that the work area is clean and clear of tools and other items.**

Carefully put the lateral light cover in position. Slide the lower part between the sidewall panel and the clips.

Fasten the quick release fasteners and put the plastic covers back.

Make sure that:
- **the lateral light cover is correctly attached,**
- **there is a sufficient overlap of the sealing lips,**
- **the sealing lips are not twisted,**
- **there is a sufficient gap to the adjacent lateral light covers,**
- **the gap between the lateral light covers is in line with the gap between the adjacent sidewall linings.**

...

Close-up

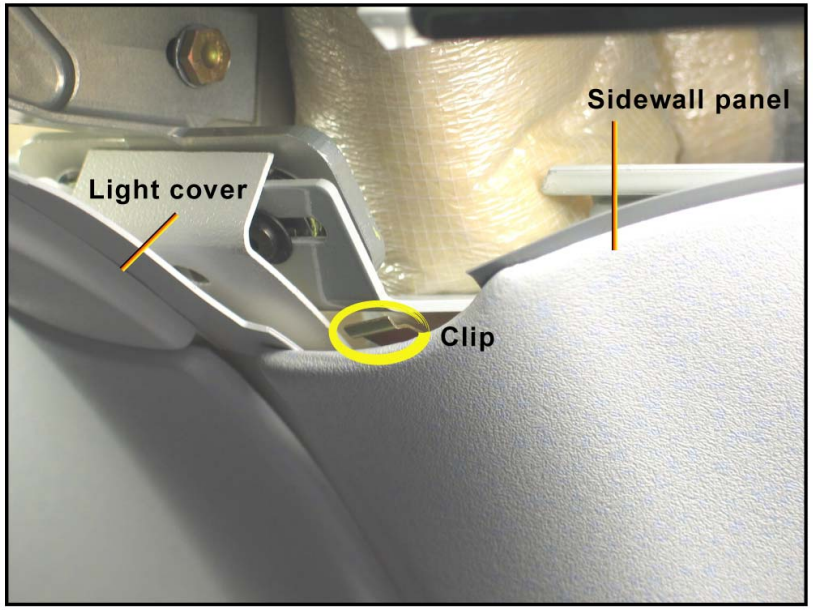

LIGHT COVERS - INSTALLATION OF THE LIGHT COVERS

Installation of the light covers

...

✓ **Job set-up**

...

Procedure

...

✓ **Make sure that the work area is clean and clear of tools and other items.**

✓ **Carefully put the lateral light cover in position. Slide the lower part between the sidewall panel and the clips.**

➡ **Fasten the quick release fasteners and put the plastic covers back.**

Make sure that:
- **the lateral light cover is correctly attached,**
- **there is a sufficient overlap of the sealing lips,**
- **the sealing lips are not twisted,**
- **there is a sufficient gap to the adjacent lateral light covers,**
- **the gap between the lateral light covers is in line with the gap between the adjacent sidewall linings.**

...

Close-up

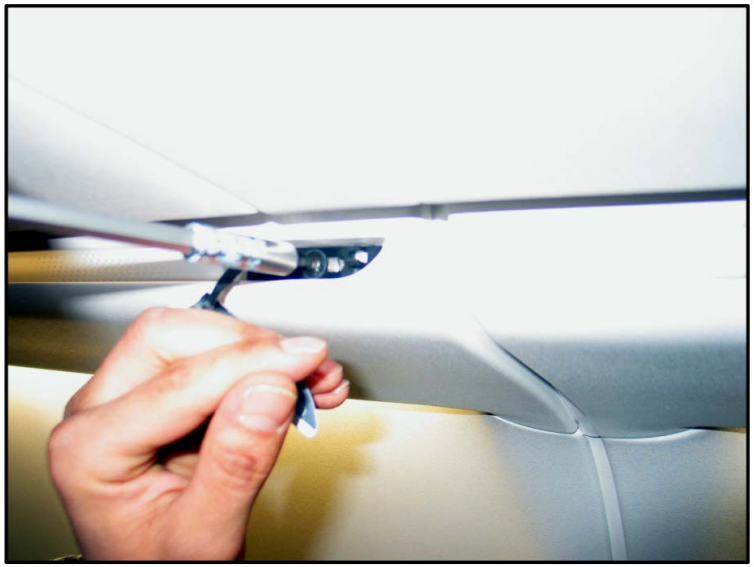

LIGHT COVERS - INSTALLATION OF THE LIGHT COVERS

Installation of the light covers

...

✓ **Job set-up**

...

Procedure

...

✓ Make sure that the work area is clean and clear of tools and other items.

✓ Carefully put the lateral light cover in position. Slide the lower part between the sidewall panel and the clips.

✓ Fasten the quick release fasteners and put the plastic covers back.

⇨ Make sure that:
- the lateral light cover is correctly attached,
- there is a sufficient overlap of the sealing lips,
- the sealing lips are not twisted,
- there is a sufficient gap to the adjacent lateral light covers,
- the gap between the lateral light covers is in line with the gap between the adjacent sidewall linings.

...

Close-up

LIGHT COVERS - INSTALLATION OF THE LIGHT COVERS

Installation of the light covers

...

✓ **Job set-up**

...

✓ **Procedure**

...

✓ Make sure that the work area is clean and clear of tools and other items.

✓ Carefully put the lateral light cover in position. Slide the lower part between the sidewall panel and the clips.

✓ Fasten the quick release fasteners and put the plastic covers back.

✓ Make sure that:
- the lateral light cover is correctly attached,
- there is a sufficient overlap of the sealing lips,
- the sealing lips are not twisted,
- there is a sufficient gap to the adjacent lateral light covers,
- the gap between the lateral light covers is in line with the gap between the adjacent sidewall linings.

...

✓ **Close-up**

TASK COMPLETED

✓

LIGHT COVERS - INSTALLATION OF THE LIGHT COVERS

LININGS & FURNISHINGS REMOVAL/INSTALLATION (3)

PASSENGER SERVICE UNIT (PSU)

REMOVAL OF A PSU

To open the PSU: at the aisle side of the PSU, carefully bend the rubber strip down and loosen the screws counter clockwise of one and a quarter. To unscrew, use a screwdriver with phillips head. Carefully lower the PSU and disconnect the electrical connectors. Lift and hold the PSU, loosen and unlock the remaining screws from the mounting rail and remove the PSU.

G7508471 - G3NT1T0 - FM25Y3000000001

Removal of the Passenger Service Unit(PSU)

...

✓ **Job set-up**

...

Procedure

...

➡ **To open the PSU: at the aisle side of the PSU, carefully bend the rubber strip down and loosen the screws counter clockwise of one and a quarter.**
To unscrew, use a screwdriver with phillips head.

Carefully lower the PSU and disconnect the electrical connectors.

Lift and hold the PSU, loosen and unlock the remaining screws from the mounting rail and remove the PSU.

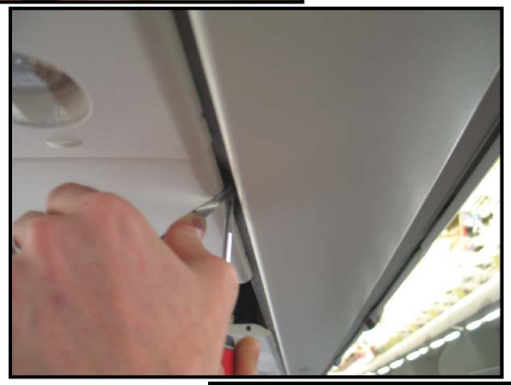

PASSENGER SERVICE UNIT (PSU) - REMOVAL OF A PSU

Removal of the Passenger Service Unit(PSU)

...

✓ **Job set-up**

...

Procedure

...

✓ To open the PSU: at the aisle side of the PSU, carefully bend the rubber strip down and loosen the screws counter clockwise of one and a quarter.
To unscrew, use a screwdriver with phillips head.

⇨ Carefully lower the PSU and disconnect the electrical connectors.

Lift and hold the PSU, loosen and unlock the remaining screws from the mounting rail and remove the PSU.

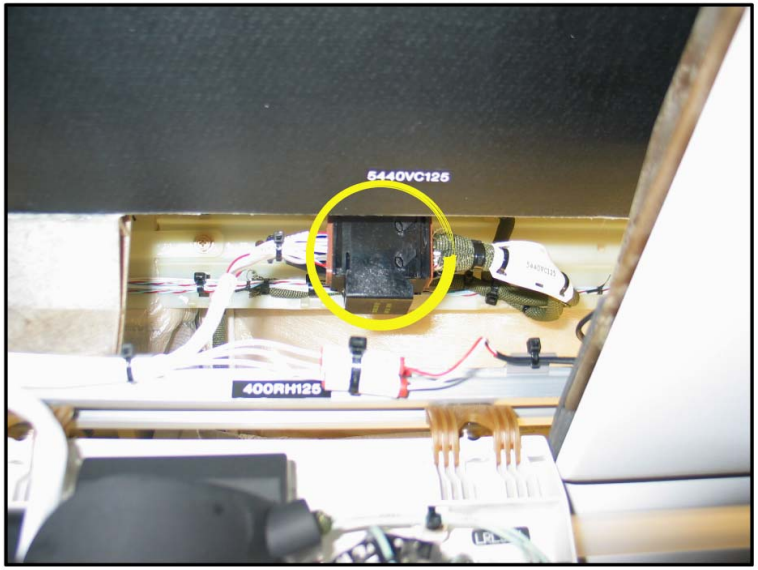

PASSENGER SERVICE UNIT (PSU) - REMOVAL OF A PSU

Removal of the Passenger Service Unit(PSU)

...

✓ **Job set-up**

...

Procedure

...

✓ To open the PSU: at the aisle side of the PSU, carefully bend the rubber strip down and loosen the screws counter clockwise of one and a quarter.
To unscrew, use a screwdriver with phillips head.

✓ Carefully lower the PSU and disconnect the electrical connectors.

⇨ Lift and hold the PSU, loosen and unlock the remaining screws from the mounting rail and remove the PSU.

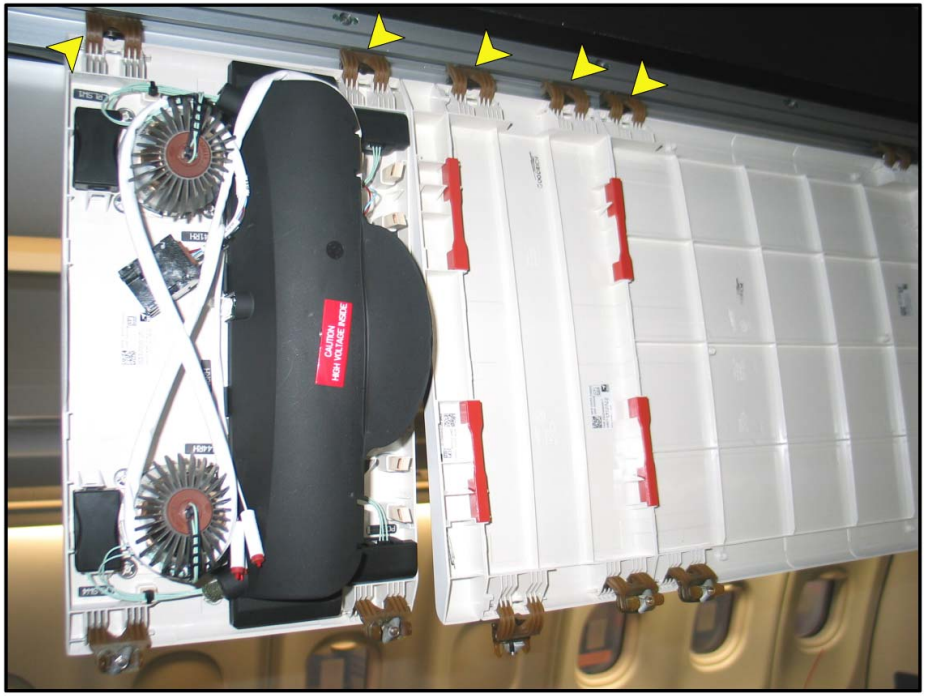

PASSENGER SERVICE UNIT (PSU) - REMOVAL OF A PSU

G7508471 - G3NT1T0 - FM25Y3000000001

Removal of the Passenger Service Unit(PSU)

...

✓ Job set-up

...

✓ Procedure

...

✓ To open the PSU: at the aisle side of the PSU, carefully bend the rubber strip down and loosen the screws counter clockwise of one and a quarter.
To unscrew, use a screwdriver with phillips head.

✓ Carefully lower the PSU and disconnect the electrical connectors.

✓ Lift and hold the PSU, loosen and unlock the remaining screws from the mounting rail and remove the PSU.

TASK COMPLETED

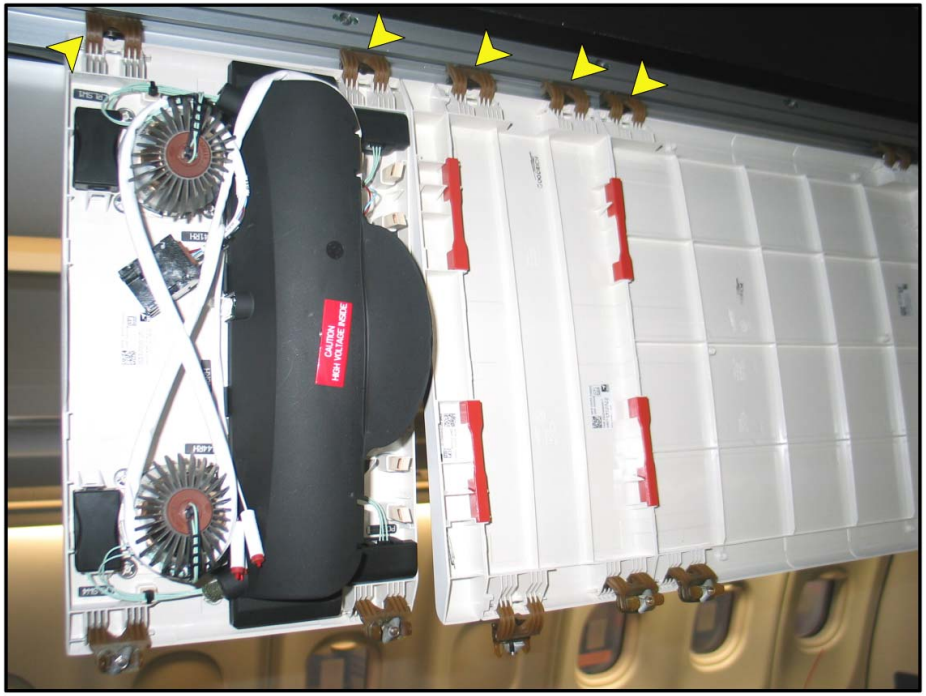

PASSENGER SERVICE UNIT (PSU) - REMOVAL OF A PSU

This Page Intentionally Left Blank

G7508471 - G3NT1T0 - FM25Y3000000001

LININGS & FURNISHINGS REMOVAL/INSTALLATION (3)

PASSENGER SERVICE UNIT (PSU) (continued)

INSTALLATION OF A PSU

Put the PSU in position and engage the locking devices in the mounting rail. Make sure that you hear a click when locking devices are being locked.
Make sure that the electrical connectors are clean and in good condition then connect it.
Make sure that the work area is clean and clear of tools and other items. Lift the PSU in position and engage the remaining locking devices in the mounting rail. Make sure you hear the click.
Torque the screws to the 0.1 m.daN with a screwdriver-torque.

G7508471 - G3NT1T0 - FM25Y3000000001

Installation of the Passenger Service Unit(PSU)

...

✓ **Job set-up**

...

Procedure

...

⇨ **Put the PSU in position and engage the locking devices in the mounting rail. Make sure that you hear a click when locking devices are being locked.**

Make sure that the electrical connectors are clean and in good condition then connect it.

Make sure that the work area is clean and clear of tools and other items. Lift the PSU in position and engage the remaining locking devices in the mounting rail. Make sure you hear the click.

Torque the screws to the 0.1 m.daN with a screwdriver-torque.

...

Close-up

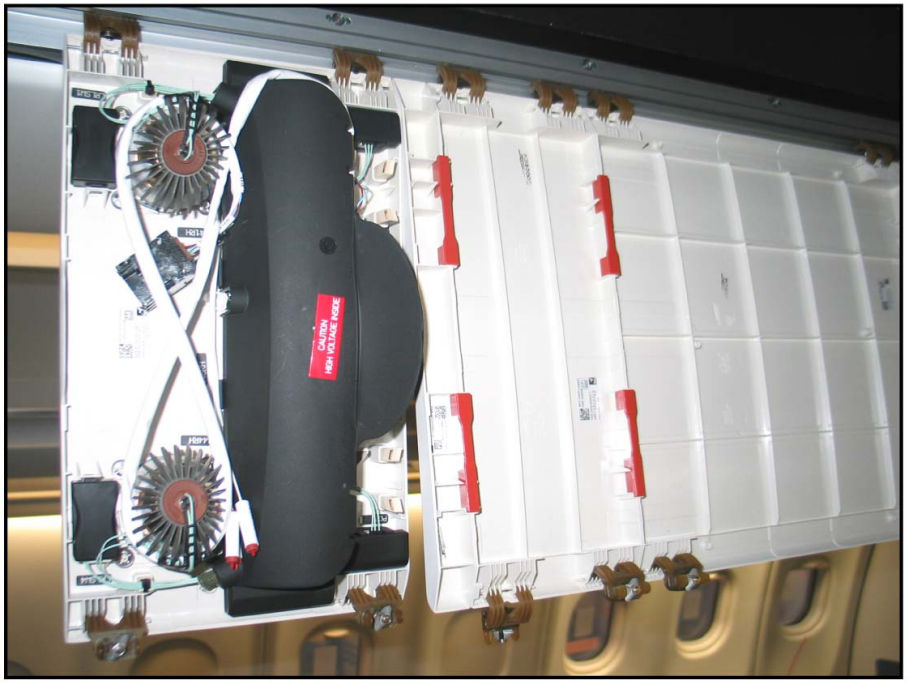

PASSENGER SERVICE UNIT (PSU) - INSTALLATION OF A PSU

Installation of the Passenger Service Unit(PSU)

...

✓ **Job set-up**

...

Procedure

...

✓ **Put the PSU in position and engage the locking devices in the mounting rail. Make sure that you hear a click when locking devices are being locked.**

⇨ **Make sure that the electrical connectors are clean and in good condition then connect it.**

Make sure that the work area is clean and clear of tools and other items. Lift the PSU in position and engage the remaining locking devices in the mounting rail. Make sure you hear the click.

Torque the screws to the 0.1 m.daN with a screwdriver-torque.

...

Close-up

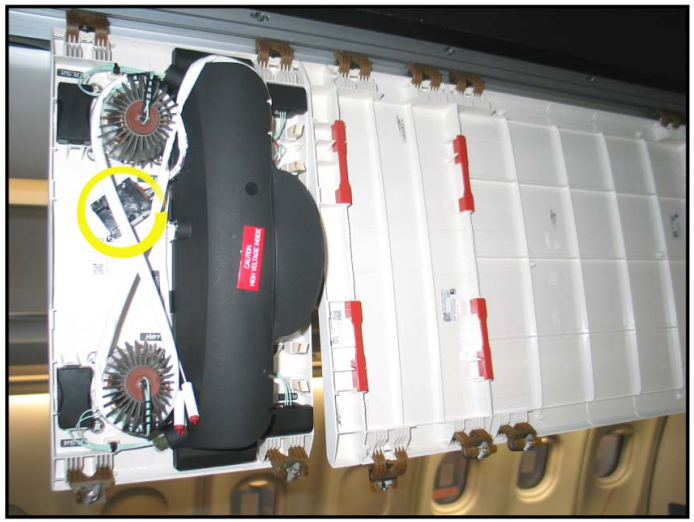

PASSENGER SERVICE UNIT (PSU) - INSTALLATION OF A PSU

Installation of the Passenger Service Unit(PSU)

...

✓ **Job set-up**

...

Procedure

...

✓ **Put the PSU in position and engage the locking devices in the mounting rail. Make sure that you hear a click when locking devices are being locked.**

✓ **Make sure that the electrical connectors are clean and in good condition then connect it.**

⇨ **Make sure that the work area is clean and clear of tools and other items. Lift the PSU in position and engage the remaining locking devices in the mounting rail. Make sure you hear the click.**

Torque the screws to the 0.1 m.daN with a screwdriver-torque.

...

Close-up

PASSENGER SERVICE UNIT (PSU) - INSTALLATION OF A PSU

Installation of the Passenger Service Unit(PSU)

...

✓ **Job set-up**

...

Procedure

...

✓ **Put the PSU in position and engage the locking devices in the mounting rail. Make sure that you hear a click when locking devices are being locked.**

✓ **Make sure that the electrical connectors are clean and in good condition then connect it.**

✓ **Make sure that the work area is clean and clear of tools and other items. Lift the PSU in position and engage the remaining locking devices in the mounting rail. Make sure you hear the click.**

⇨ **Torque the screws to the 0.1 m.daN with a screwdriver-torque.**

...

Close-up

PASSENGER SERVICE UNIT (PSU) - INSTALLATION OF A PSU

Installation of the Passenger Service Unit(PSU)

...

✓ **Job set-up**

...

✓ **Procedure**

...

✓ **Put the PSU in position and engage the locking devices in the mounting rail. Make sure that you hear a click when locking devices are being locked.**

✓ **Make sure that the electrical connectors are clean and in good condition then connect it.**

✓ **Make sure that the work area is clean and clear of tools and other items. Lift the PSU in position and engage the remaining locking devices in the mounting rail. Make sure you hear the click.**

✓ **Torque the screws to the 0.1 m.daN with a screwdriver-torque.**

...

✓ **Close-up**

✓ TASK COMPLETED

PASSENGER SERVICE UNIT (PSU) - INSTALLATION OF A PSU

G7508471 - G3NT1T0 - FM25Y3000000001

LININGS & FURNISHINGS REMOVAL/INSTALLATION (3)

HANDRAIL

REMOVAL OF THE HANDRAIL

Open the related stowage compartment door to get access to the screws, hold the handrail and remove the screws.
Remove the handrail.

NOTE: some handrails are equipped with cabin temperature sensors.

G7508471 - G3NT1T0 - FM25Y3000000001

Removal of the handrail

...

✓ **Job set-up**

...

Procedure

...

⇨ **Open the related stowage compartment door to get access to the screws, hold the handrail and remove the screws.**

Remove the handrail.

HANDRAIL - REMOVAL OF THE HANDRAIL

Removal of the handrail

...

✓ **Job set-up**

...

Procedure

...

✓ **Open the related stowage compartment door to get access to the screws, hold the handrail and remove the screws.**

⇨ **Remove the handrail.**

HANDRAIL - REMOVAL OF THE HANDRAIL

Removal of the handrail

...

✓ **Job set-up**

...

✓ **Procedure**

...

✓ **Open the related stowage compartment door to get access to the screws, hold the handrail and remove the screws.**

✓ **Remove the handrail.**

TASK COMPLETED

NOTE: some handrails are equipped with cabin temperature sensors.

HANDRAIL - REMOVAL OF THE HANDRAIL

LININGS & FURNISHINGS REMOVAL/INSTALLATION (3)

HANDRAIL (continued)

INSTALLATION OF THE HANDRAIL

Put the handrail in position on the overhead stowage compartment, and install the screws.

NOTE: check the lip seal installation.

G7508471 - G3NT1T0 - FM25Y3000000001

Installation of the handrail

...

✓ **Job set-up**

...

Procedure

...

➡ **Put the handrail in position on the overhead stowage compartment, and install the screws.**

...

Close-up

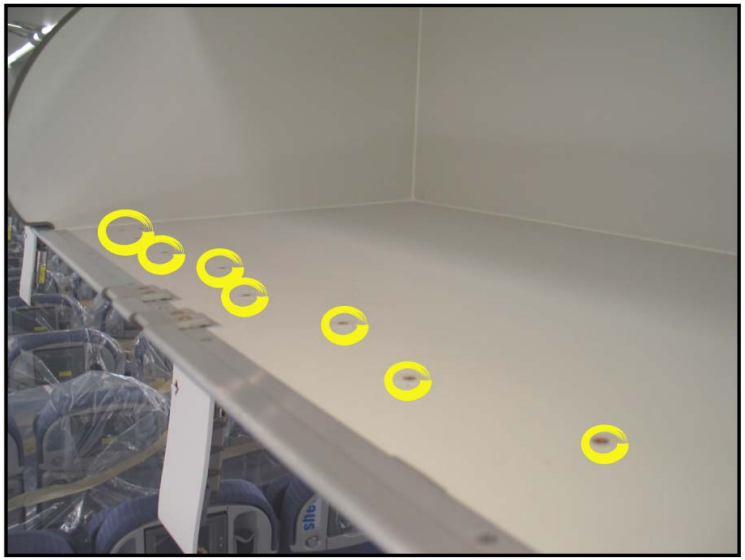

HANDRAIL - INSTALLATION OF THE HANDRAIL

Installation of the handrail

...

✓ Job set-up

...

✓ Procedure

...

✓ Put the handrail in position on the overhead stowage compartment, and install the screws.

...

✓ Close-up

NOTE: check the lip seal installation.

TASK COMPLETED

HANDRAIL - INSTALLATION OF THE HANDRAIL

This Page Intentionally Left Blank

G7508471 - G3NT1T0 - FM25Y3000000001

LININGS & FURNISHINGS REMOVAL/INSTALLATION (3)

OVERHEAD STOWAGE COMPARTMENT-DOOR

REMOVAL OF THE OVERHEAD STOWAGE-COMPARTMENT-DOOR

NOTE: the removal procedure for all the stowage-compartment door types is the same.

Open the door and hold it in position.

Remove the screws, the washers from the hinges.

Carefully remove the door.

G7508471 - G3NT1T0 - FM25Y3000000001

Removal of the overhead stowage-compartment door

...

✓ **Job set-up**

...

Procedure

...

⇨ **Open the door and hold it in position.**

Remove the screws, the washers from the hinges.

Carefully remove the door.

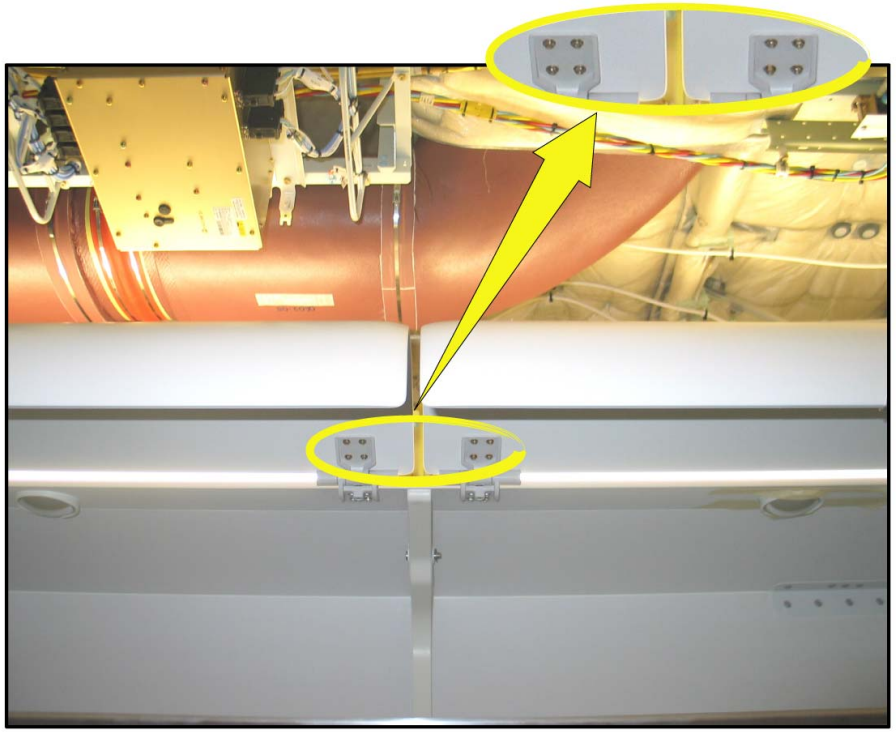

NOTE: the removal procedure for all the stowage-compartment door types is the same.

G7508471 - G3NT1T0 - FM25Y3000000001

OVERHEAD STOWAGE COMPARTMENT-DOOR - REMOVAL OF THE OVERHEAD STOWAGE-COMPARTMENT-DOOR

Removal of the overhead stowage-compartment door

...

✓ **Job set-up**

...

Procedure

...

✓ **Open the door and hold it in position.**

⇨ **Remove the screws, the washers from the hinges.**

Carefully remove the door.

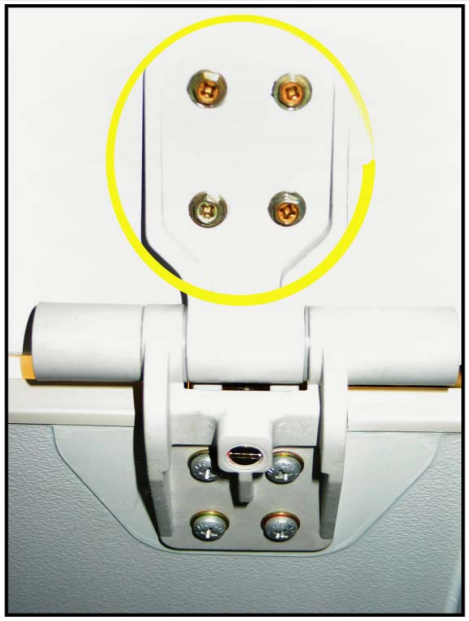

OVERHEAD STOWAGE COMPARTMENT-DOOR - REMOVAL OF THE OVERHEAD STOWAGE-COMPARTMENT-DOOR

Removal of the overhead stowage-compartment door

...

✓ **Job set-up**

...

Procedure

...

✓ **Open the door and hold it in position.**

✓ **Remove the screws, the washers from the hinges.**

⇨ **Carefully remove the door.**

G7508471 - G3NT1T0 - FM25Y3000000001

Removal of the overhead stowage-compartment door

...

✓ **Job set-up**

...

✓ **Procedure**

...

✓ **Open the door and hold it in position.**

✓ **Remove the screws, the washers from the hinges.**

✓ **Carefully remove the door.**

TASK COMPLETED

G7508471 - G3NT1T0 - FM25Y3000000001

This Page Intentionally Left Blank

G7508471 - G3NT1T0 - FM25Y3000000001

LININGS & FURNISHINGS REMOVAL/INSTALLATION (3)

OVERHEAD STOWAGE COMPARTMENT-DOOR (continued)

INSTALLATION OF THE OVERHEAD STOWAGE-COMPARTMENT-DOOR

NOTE: the installation procedure for all the stowage-compartment door types is the same.

Put the door in position on the hinges, and install the washers and the screws.

If necessary, adjust and align the stowage compartment door (refer to AMM 25-24-61-820-801).

G7508471 - G3NT1T0 - FM25Y3000000001

Installation of the overhead stowage-compartment door

...

✓ **Job set-up**

...

Procedure

...

Put the door in position on the hinges, and install the washers and the screws.

If necessary, adjust and align the stowage compartment door (refer to AMM 25-24-61-820-801).

...

Close-up

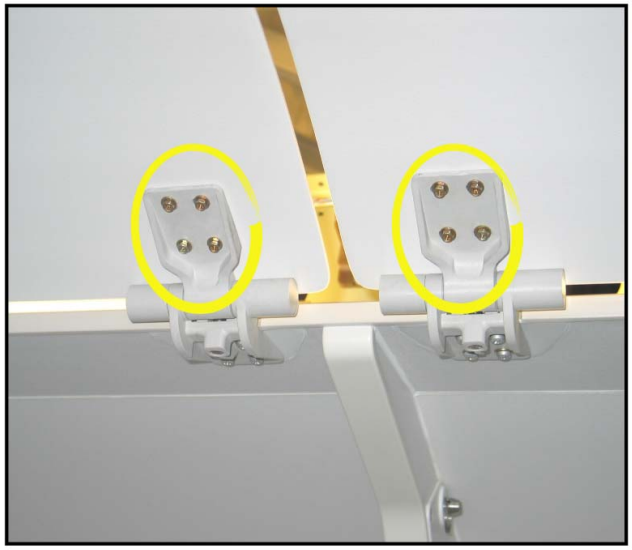

NOTE: the installation procedure for all the stowage-compartment door types is the same.

OVERHEAD STOWAGE COMPARTMENT-DOOR - INSTALLATION OF THE OVERHEAD STOWAGE-COMPARTMENT-DOOR

Installation of the overhead stowage-compartment door

...

✓ **Job set-up**

...

Procedure

...

✓ **Put the door in position on the hinges, and install the washers and the screws.**

➡ **If necessary, adjust and align the stowage compartment door (refer to AMM 25-24-61-820-801).**

...

Close-up

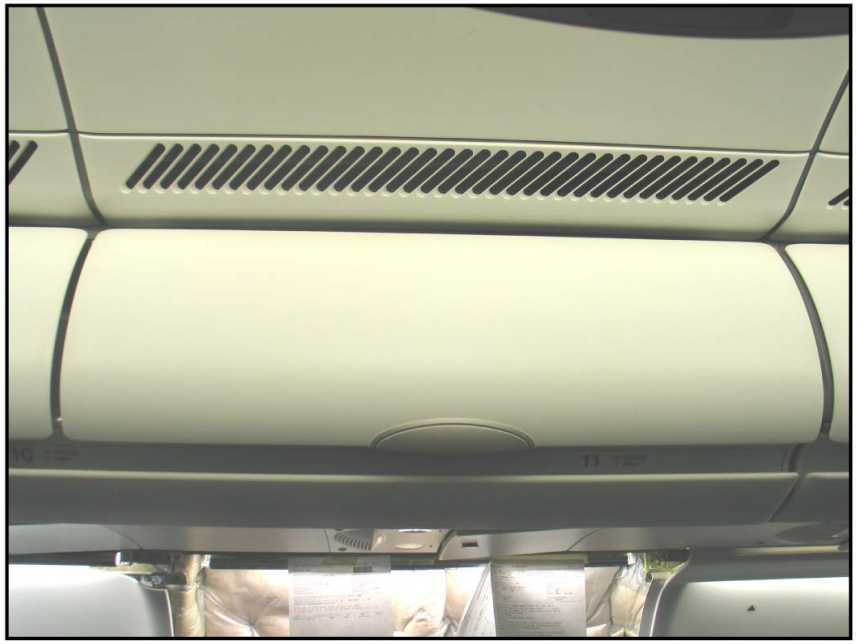

OVERHEAD STOWAGE COMPARTMENT-DOOR - INSTALLATION OF THE OVERHEAD STOWAGE-COMPARTMENT-DOOR

Installation of the overhead stowage-compartment door

...

✓ **Job set-up**

...

✓ **Procedure**

...

✓ **Put the door in position on the hinges, and install the washers and the screws.**

✓ **If necessary, adjust and align the stowage compartment door (refer to AMM 25-24-61-820-801).**

...

✓ **Close-up**

TASK COMPLETED

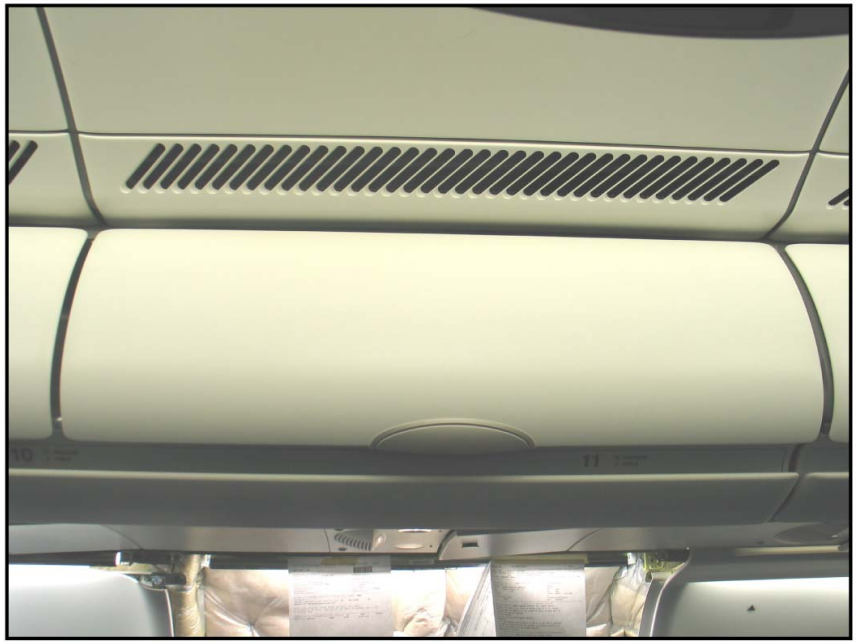

OVERHEAD STOWAGE COMPARTMENT-DOOR - INSTALLATION OF THE OVERHEAD STOWAGE-COMPARTMENT-DOOR

G7508471 - G3NT1T0 - FM25Y3000000001

LININGS & FURNISHINGS REMOVAL/INSTALLATION (3)

OVERHEAD STOWAGE COMPARTMENT-DOOR (continued)

ADJUSTEMENT OF THE OVERHEAD STOWAGE-COMPARTMENT-DOOR

Make sure that the door end is aligned with the end of the handrail and the dimension X is correct, if not:
- loosen the screws,
- move the door until it is aligned with the end of the handrail and dimension X is correct,
- then tighten the screws.

Open the door, and make sure that the dimension Z is correct, if not:
- turn the screws clockwise to move the door up and counter clockwise to move the door down.

Make sure the door locks correctly, if not:
- loosen the screws,
- and adjust the door-keeper-latch to the required position,
- then tighten the screws.

G7508471 - G3NT1T0 - FM25Y3000000001

Adjustement of the overhead stowage-compartment door

...

✓ **Job set-up**

...

Procedure

...

Make sure that the door end is aligned with the end of the handrail and the dimension X is correct, if not:
- loosen the screws,
- move the door until it is aligned with the end of the handrail and dimension X is correct,
- then tighten the screws.

Open the door, and make sure that the dimension Z is correct, if not:
- turn the screws clockwise to move the door up and counter clockwise to move the door down.

Make sure the door locks correctly, if not:
- loosen the screws,
- and adjust the door-keeper-latch to the required position,
- then tighten the screws.

...

Close-up

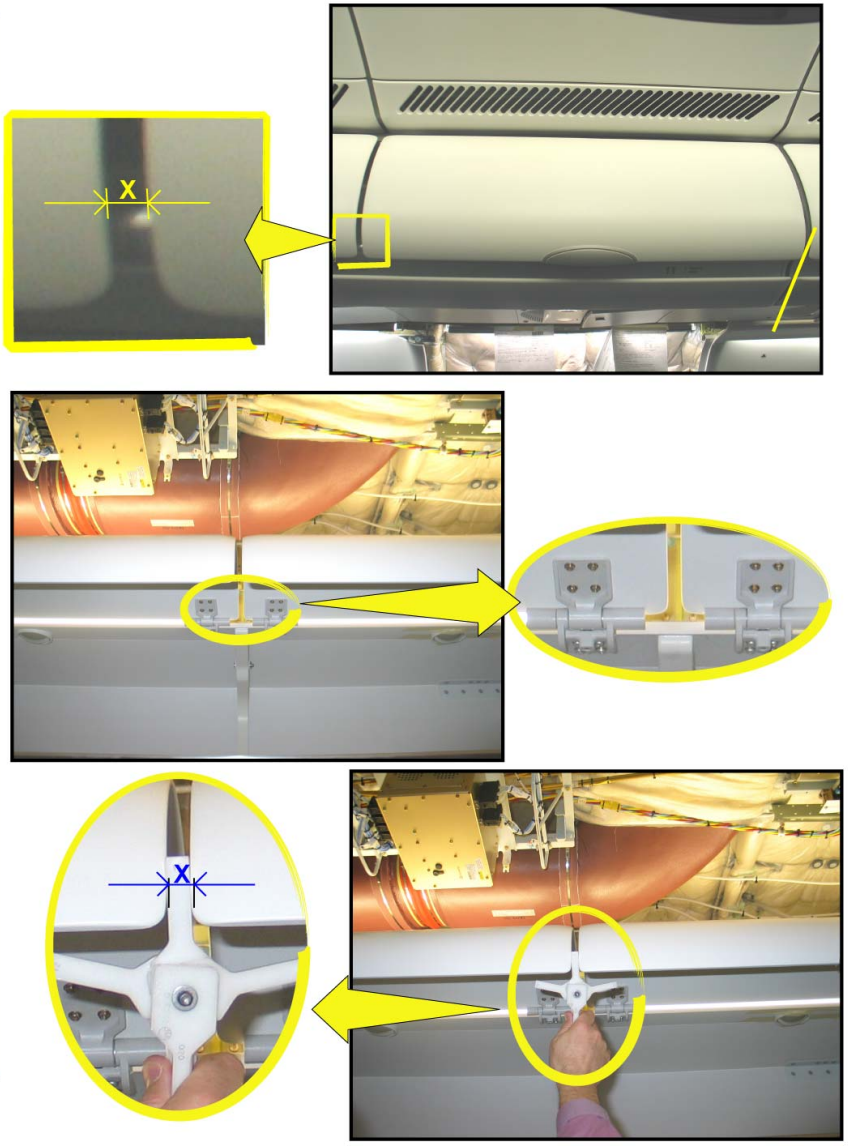

OVERHEAD STOWAGE COMPARTMENT-DOOR - ADJUSTEMENT OF THE OVERHEAD STOWAGE-COMPARTMENT-DOOR

G7508471 - G3NT1T0 - FM25Y300000001

Adjustement of the overhead stowage-compartment door

...

✓ **Job set-up**

...

Procedure

...

✓ **Make sure that the door end is aligned with the end of the handrail and the dimension X is correct, if not:**
- loosen the screws,
- move the door until it is aligned with the end of the handrail and dimension X is correct,
- then tighten the screws.

➡ **Open the door, and make sure that the dimension Z is correct, if not:**
- turn the screws clockwise to move the door up and counter clockwise to move the door down.

Make sure the door locks correctly, if not:
- loosen the screws,
- and adjust the door-keeper-latch to the required position,
- then tighten the screws.

...

Close-up

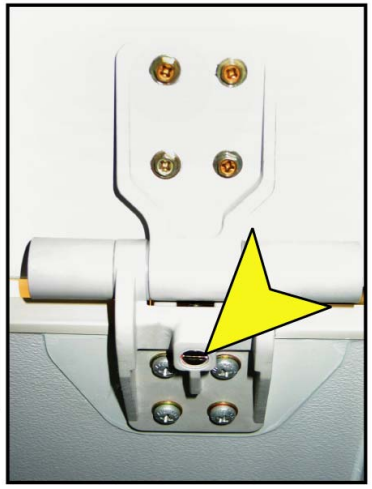

OVERHEAD STOWAGE COMPARTMENT-DOOR - ADJUSTEMENT OF THE OVERHEAD STOWAGE-COMPARTMENT-DOOR

Adjustement of the overhead stowage-compartment door

...

✓ **Job set-up**

...

Procedure

...

✓ **Make sure that the door end is aligned with the end of the handrail and the dimension X is correct, if not:**
- loosen the screws,
- move the door until it is aligned with the end of the handrail and dimension X is correct,
- then tighten the screws.

✓ **Open the door, and make sure that the dimension Z is correct, if not:**
- turn the screws clockwise to move the door up and counter clockwise to move the door down.

➡ **Make sure the door locks correctly, if not:**
- loosen the screws,
- and adjust the door-keeper-latch to the required position,
- then tighten the screws.

...

Close-up

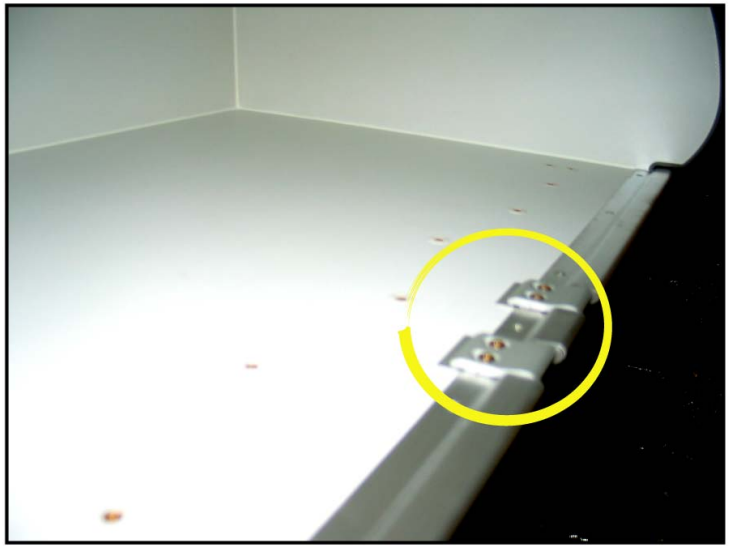

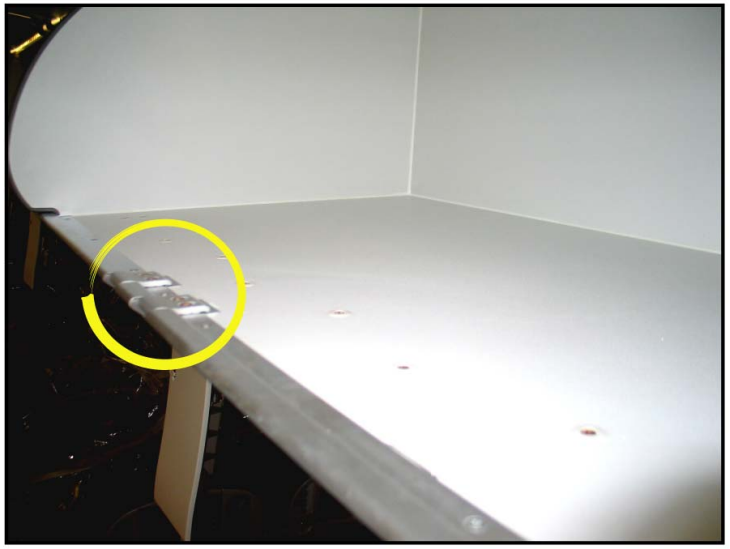

OVERHEAD STOWAGE COMPARTMENT-DOOR - ADJUSTEMENT OF THE OVERHEAD STOWAGE-COMPARTMENT-DOOR

Adjustement of the overhead stowage-compartment door

...

✓ **Job set-up**

...

✓ **Procedure**

...

✓ **Make sure that the door end is aligned with the end of the handrail and the dimension X is correct, if not:**
- loosen the screws,
- move the door until it is aligned with the end of the handrail and dimension X is correct,
- then tighten the screws.

✓ **Open the door, and make sure that the dimension Z is correct, if not:**
- turn the screws clockwise to move the door up and counter clockwise to move the door down.

✓ **Make sure the door locks correctly, if not:**
- loosen the screws,
- and adjust the door-keeper-latch to the required position,
- then tighten the screws.

...

✓ **Close-up**

TASK COMPLETED

G7508471 - G3NT1T0 - FM25Y3000000001

OVERHEAD STOWAGE COMPARTMENT-DOOR - ADJUSTEMENT OF THE OVERHEAD STOWAGE-COMPARTMENT-DOOR

This Page Intentionally Left Blank

G7508471 - G3NT1T0 - FM25Y3000000001

LININGS & FURNISHINGS REMOVAL/INSTALLATION (3)

CLOSING COVERS (AIR OUTLET)

REMOVAL OF THE CLOSING COVERS (AIR OUTLET)

CAUTION: do not use too much force when you remove the cover as this can cause damage to the retainer.

NOTE: this procedure is the same for all closing covers on the left and right sides.

Carefully move the closing cover inboard to disengage the retainers, and pull it down until they are released from the ceiling panel.

Carefully pull the closing cover inboard to release the retainers from the supports.

G7508471 - G3NT1T0 - FM25Y3000000001

Removal of the closing covers

...

Job set-up

...

Procedure

...

Carefully move the closing cover inboard to disengage the retainers, and pull it down until they are released from the ceiling panel.

Carefully pull the closing cover inboard to release the retainers from the supports.

DO NOT USE TOO MUCH FORCE WHEN YOU REMOVE THE COVER AS THIS CAN CAUSE DAMAGE TO THE RETAINER

Removal of the closing covers

...

✓ **Job set-up**

...

Procedure

...

⇨ **Carefully move the closing cover inboard to disengage the retainers, and pull it down until they are released from the ceiling panel.**

Carefully pull the closing cover inboard to release the retainers from the supports.

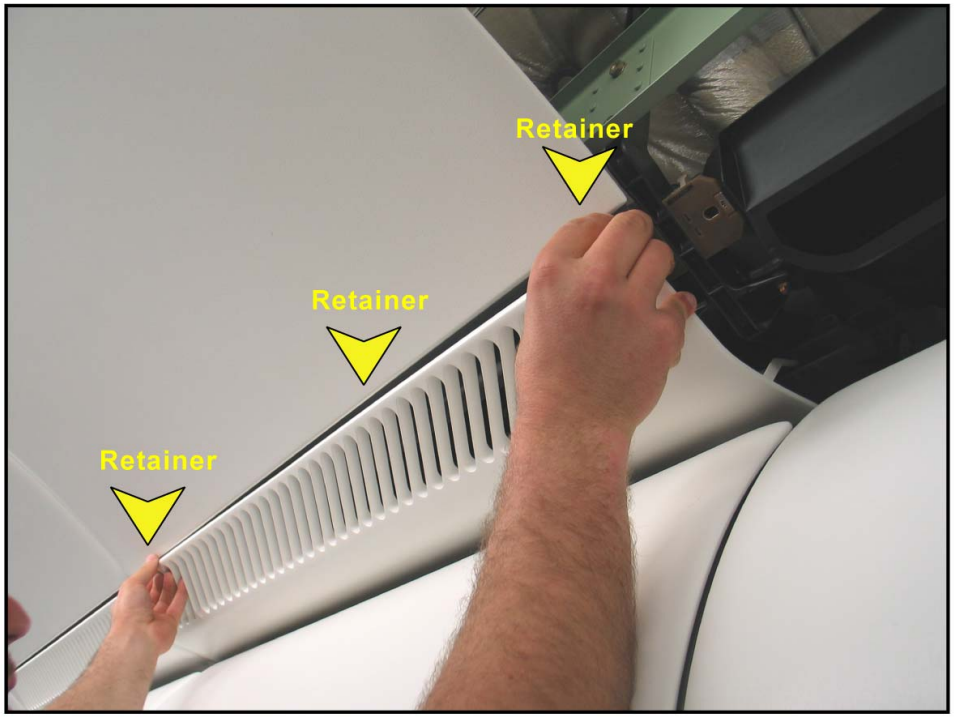

NOTE: this procedure is the same for all closing covers on the left and right sides.

CLOSING COVERS (AIR OUTLET) - REMOVAL OF THE CLOSING COVERS (AIR OUTLET)

Removal of the closing covers

...

✓ **Job set-up**

...

Procedure

...

✓ **Carefully move the closing cover inboard to disengage the retainers, and pull it down until they are released from the ceiling panel.**

➡ **Carefully pull the closing cover inboard to release the retainers from the supports.**

CLOSING COVERS (AIR OUTLET) - REMOVAL OF THE CLOSING COVERS (AIR OUTLET)

Removal of the closing covers

...

✓ **Job set-up**

...

✓ **Procedure**

...

✓ **Carefully move the closing cover inboard to disengage the retainers, and pull it down until they are released from the ceiling panel.**

✓ **Carefully pull the closing cover inboard to release the retainers from the supports.**

TASK COMPLETED

CLOSING COVERS (AIR OUTLET) - REMOVAL OF THE CLOSING COVERS (AIR OUTLET)

This Page Intentionally Left Blank

G7508471 - G3NT1T0 - FM25Y3000000001

LININGS & FURNISHINGS REMOVAL/INSTALLATION (3)

CLOSING COVERS (AIR OUTLET) (continued)

INSTALLATION OF THE CLOSING COVERS (AIR OUTLET)

NOTE: this procedure is the same for all closing covers left and right.

Make sure the work area is clean and clear of tools and other items.
Put the closing cover in position and carefully engage the retainers into the supports.
Carefully push the closing cover up to engage all retainers correctly into the ceiling panel.
Make sure that:
- the closing cover is correctly attached,there is a sufficient overlap of the sealing lips,
- the sealing lips are not twisted,
- there is a sufficient gap to the adjacent closing covers,
- the gap between the closing covers is in line with the gap between the adjacent ceiling panels.

G7508471 - G3NT1T0 - FM25Y3000000001

Installation of the closing covers

...

✓ **Job set-up**

...

Procedure

...

Make sure the work area is clean and clear of tools and other items.

Put the closing cover in position and carefully engage the retainers into the supports.

Carefully push the closing cover up to engage all retainers correctly into the ceiling panel.

Make sure that :
- the closing cover is correctly attached,
- there is a sufficient overlap of the sealing lips,
- the sealing lips are not twisted,
- there is a sufficient gap between the adjacent closing covers,
- the gap between the closing covers is in line with the gap between the adjacent ceiling panels.

...

Close-up

NOTE: this procedure is the same for all closing covers on the left and right sides.

CLOSING COVERS (AIR OUTLET) - INSTALLATION OF THE CLOSING COVERS (AIR OUTLET)

Installation of the closing covers

...

✓ **Job set-up**

...

Procedure

...

✓ **Make sure the work area is clean and clear of tools and other items.**

➡ **Put the closing cover in position and carefully engage the retainers into the supports.**

Carefully push the closing cover up to engage all retainers correctly into the ceiling panel.

Make sure that :
- **the closing cover is correctly attached,**
- **there is a sufficient overlap of the sealing lips,**
- **the sealing lips are not twisted,**
- **there is a sufficient gap between the adjacent closing covers,**
- **the gap between the closing covers is in line with the gap between the adjacent ceiling panels.**

...

Close-up

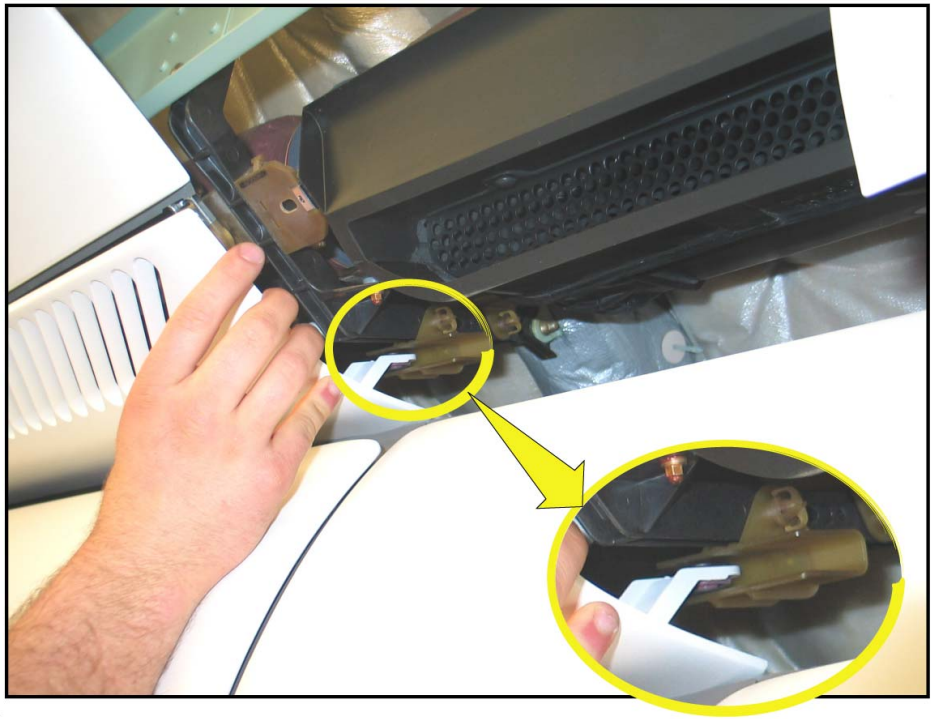

CLOSING COVERS (AIR OUTLET) - INSTALLATION OF THE CLOSING COVERS (AIR OUTLET)

Installation of the closing covers

...

✓ **Job set-up**

...

Procedure

...

✓ Make sure the work area is clean and clear of tools and other items.

✓ Put the closing cover in position and carefully engage the retainers into the supports.

➡ Carefully push the closing cover up to engage all retainers correctly into the ceiling panel.

Make sure that :
- the closing cover is correctly attached,
- there is a sufficient overlap of the sealing lips,
- the sealing lips are not twisted,
- there is a sufficient gap between the adjacent closing covers,
- the gap between the closing covers is in line with the gap between the adjacent ceiling panels.

...

Close-up

CLOSING COVERS (AIR OUTLET) - INSTALLATION OF THE CLOSING COVERS (AIR OUTLET)

Installation of the closing covers

...

✓ **Job set-up**

...

Procedure

...

✓ **Make sure the work area is clean and clear of tools and other items.**

✓ **Put the closing cover in position and carefully engage the retainers into the supports.**

✓ **Carefully push the closing cover up to engage all retainers correctly into the ceiling panel.**

➡ **Make sure that :**
- the closing cover is correctly attached,
- there is a sufficient overlap of the sealing lips,
- the sealing lips are not twisted,
- there is a sufficient gap between the adjacent closing covers,
- the gap between the closing covers is in line with the gap between the adjacent ceiling panels.

...

Close-up

CLOSING COVERS (AIR OUTLET) - INSTALLATION OF THE CLOSING COVERS (AIR OUTLET)

Installation of the closing covers

...

✓ Job set-up

...

✓ Procedure

...

✓ Make sure the work area is clean and clear of tools and other items.

✓ Put the closing cover in position and carefully engage the retainers into the supports.

✓ Carefully push the closing cover up to engage all retainers correctly into the ceiling panel.

✓ Make sure that :
- the closing cover is correctly attached,
- there is a sufficient overlap of the sealing lips,
- the sealing lips are not twisted,
- there is a sufficient gap between the adjacent closing covers,
- the gap between the closing covers is in line with the gap between the adjacent ceiling panels.

...

✓ Close-up

TASK COMPLETED ✓

CLOSING COVERS (AIR OUTLET) - INSTALLATION OF THE CLOSING COVERS (AIR OUTLET)

LININGS & FURNISHINGS REMOVAL/INSTALLATION (3)

CEILING PANELS

REMOVAL OF THE CEILING PANELS

Unlock the fasteners and hold the ceiling panel.
Carefully pull the ceiling panel outboard and remove it from the support.

G7508471 - G3NT1T0 - FM25Y3000000001

Removal of the ceiling panels

...

✓ **Job set-up**

...

Procedure

...

⇨ **Unlock the fasteners and hold the ceiling panel.**

Carefully pull the ceiling panel outboard and remove it from the support.

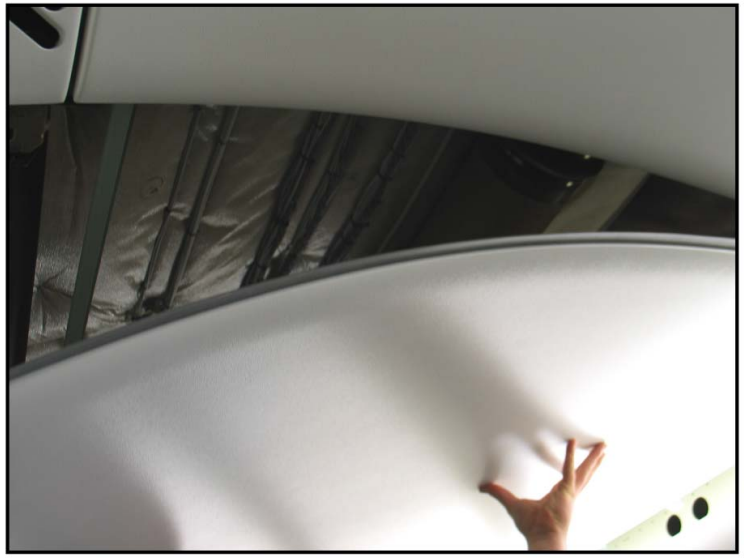

CEILING PANELS - REMOVAL OF THE CEILING PANELS

Removal of the ceiling panels

...

✓ **Job set-up**

...

Procedure

...

✓ **Unlock the fasteners and hold the ceiling panel.**

⇨ **Carefully pull the ceiling panel outboard and remove it from the support.**

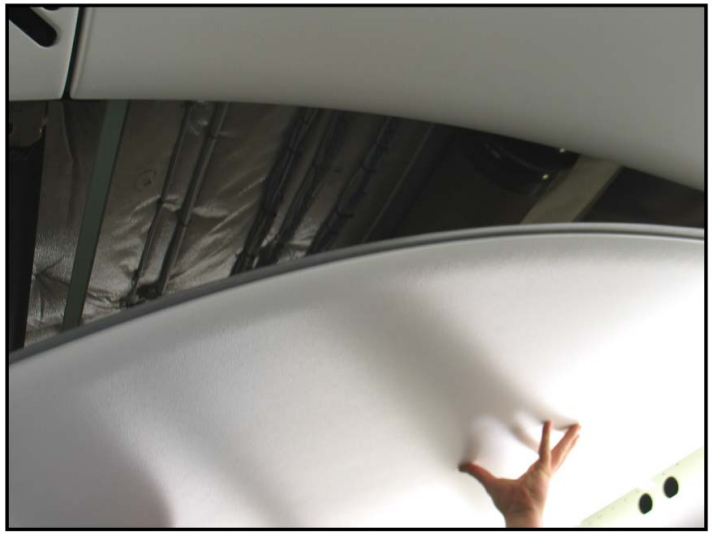

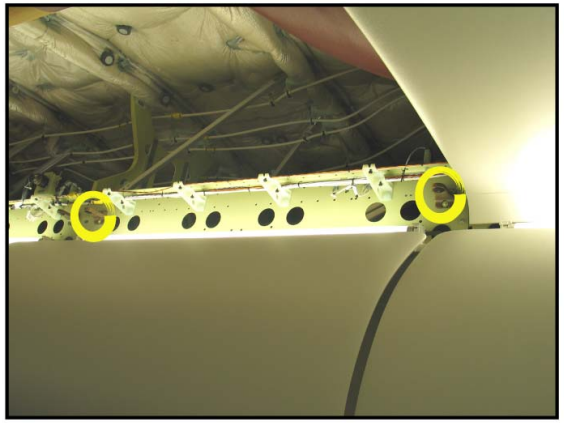

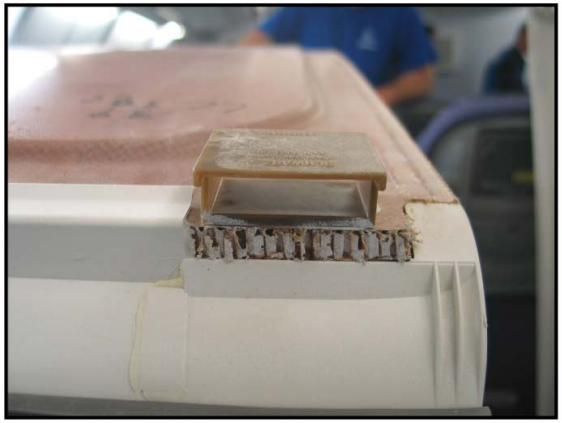

CEILING PANELS - REMOVAL OF THE CEILING PANELS

Removal of the ceiling panels

...

✓ **Job set-up**

...

✓ **Procedure**

...

✓ **Unlock the fasteners and hold the ceiling panel.**

✓ **Carefully pull the ceiling panel outboard and remove it from the support.**

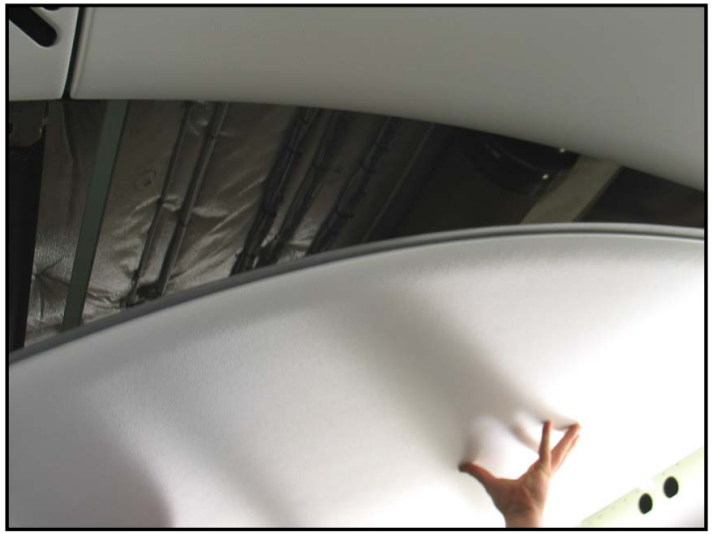

TASK COMPLETED ✓

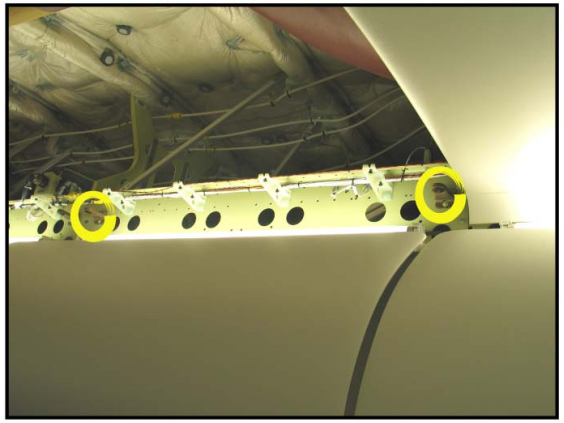

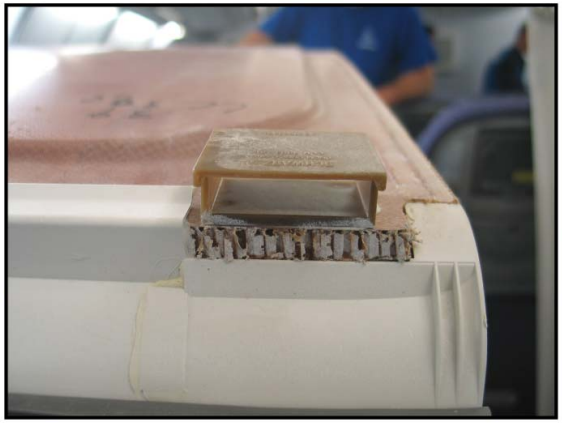

CEILING PANELS - REMOVAL OF THE CEILING PANELS

LININGS & FURNISHINGS REMOVAL/INSTALLATION (3)

CEILING PANELS (continued)

INSTALLATION OF THE CEILING PANELS

Make sure the work area is clean and clear of tools and other items.
Move the ceiling panel to engage the retainers into the supports.
Lift the ceiling panel and lock the fasteners. Make sure the sealing lip is not twisted.

G7508471 - G3NT1T0 - FM25Y3000000001

Installation of the ceiling panels

...

✓ **Job set-up**

...

Procedure

...

Make sure the work area is clean and clear of tools and other items.

Move the ceiling panel to engage the retainers into the supports.

Lift the ceiling panel and lock the fasteners. Make sure the sealing lip is not twisted.

...

Close-up

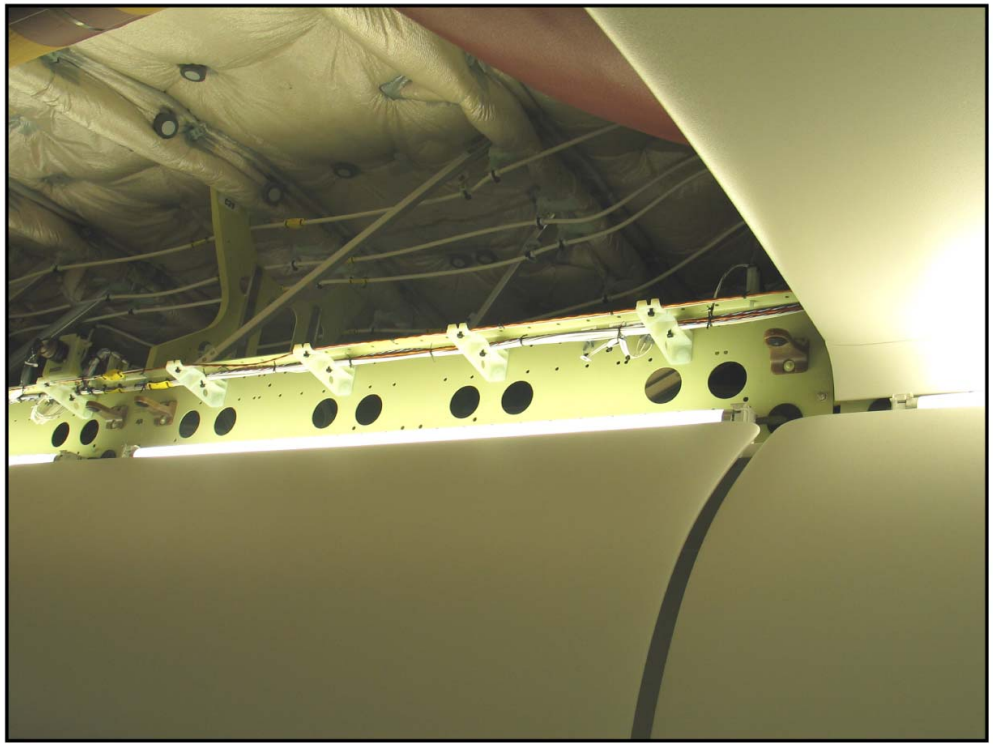

CEILING PANELS - INSTALLATION OF THE CEILING PANELS

Installation of the ceiling panels

...

✓ **Job set-up**

...

Procedure

...

✓ **Make sure the work area is clean and clear of tools and other items.**

➡ **Move the ceiling panel to engage the retainers into the supports.**

Lift the ceiling panel and lock the fasteners. Make sure the sealing lip is not twisted.

...

Close-up

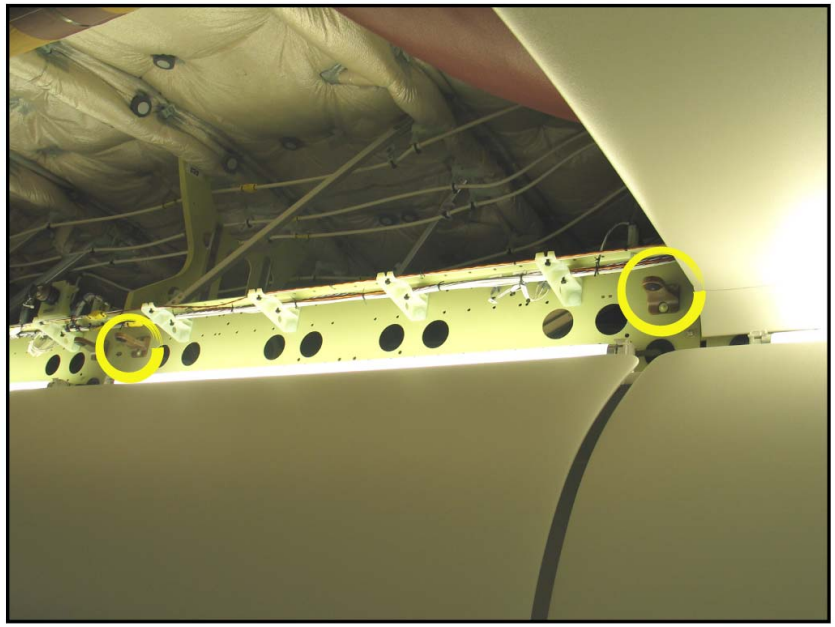

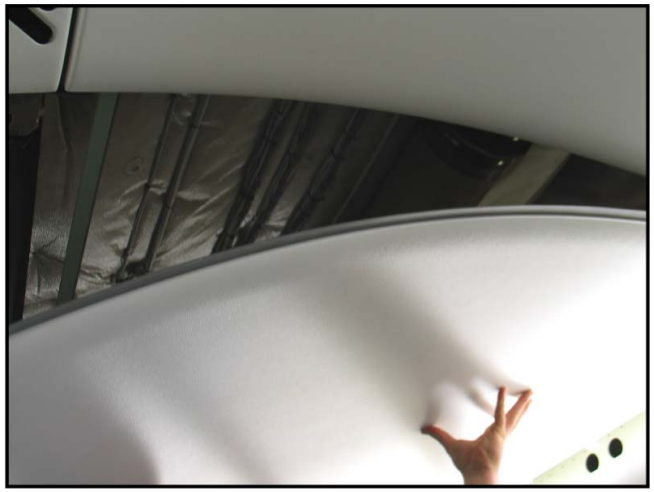

CEILING PANELS - INSTALLATION OF THE CEILING PANELS

Installation of the ceiling panels

...

✓ **Job set-up**

...

Procedure

...

✓ **Make sure the work area is clean and clear of tools and other items.**

✓ **Move the ceiling panel to engage the retainers into the supports.**

⇨ **Lift the ceiling panel and lock the fasteners. Make sure the sealing lip is not twisted.**

...

Close-up

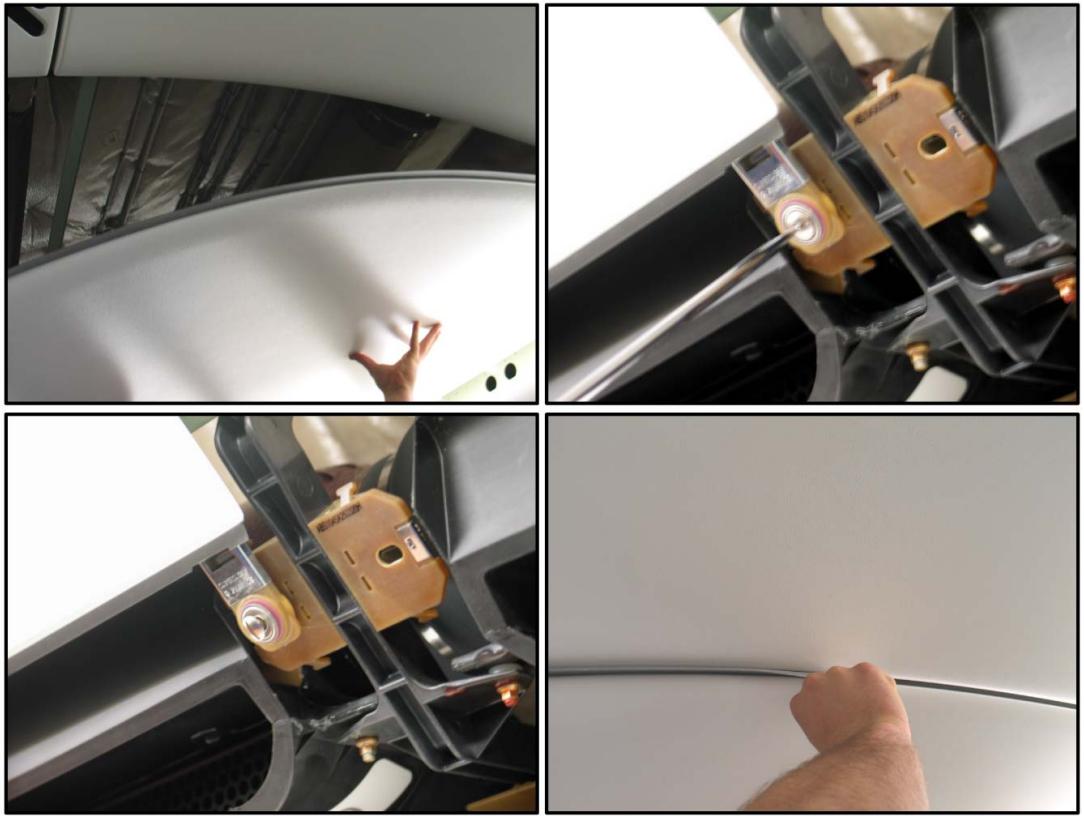

CEILING PANELS - INSTALLATION OF THE CEILING PANELS

Installation of the ceiling panels

...

✓ **Job set-up**

...

✓ **Procedure**

...

✓ **Make sure the work area is clean and clear of tools and other items.**

✓ **Move the ceiling panel to engage the retainers into the supports.**

✓ **Lift the ceiling panel and lock the fasteners. Make sure the sealing lip is not twisted.**

...

✓ **Close-up**

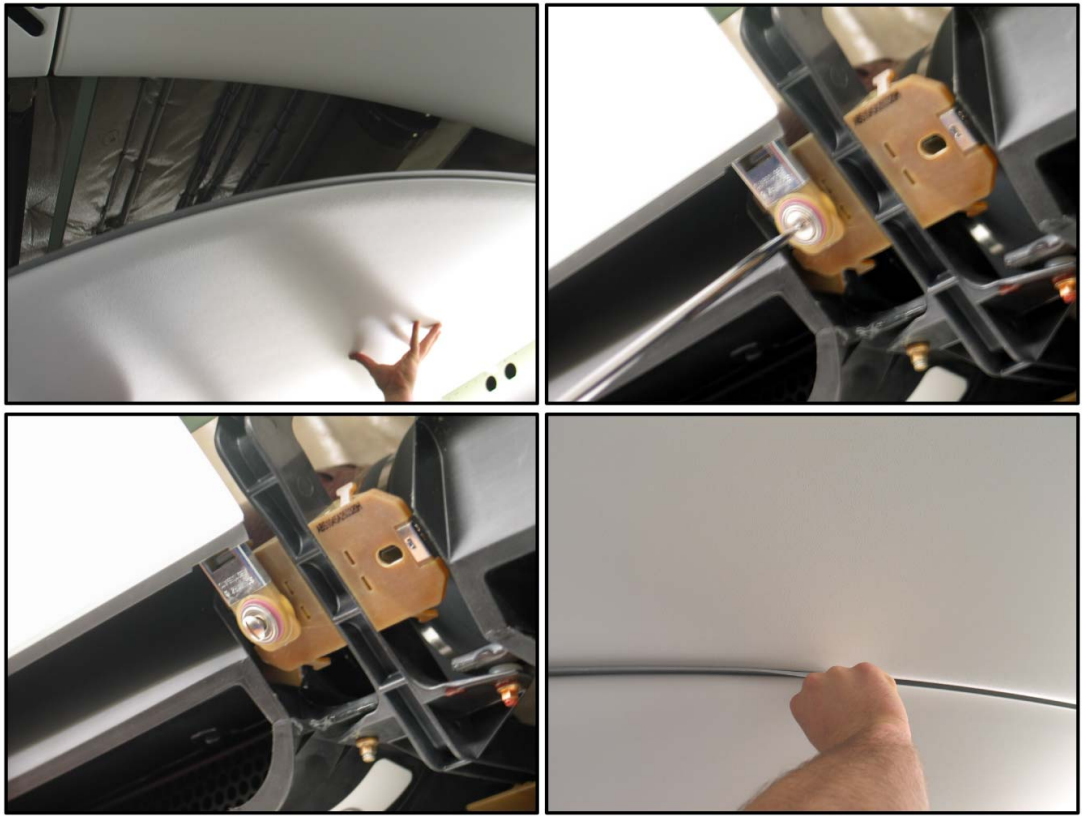

TASK COMPLETED

CEILING PANELS - INSTALLATION OF THE CEILING PANELS

This Page Intentionally Left Blank

G7508471 - G3NT1T0 - FM25Y3000000001

LININGS & FURNISHINGS REMOVAL/INSTALLATION (3)

INSTALLATION OF RAPID-DECOMPRESSION PANELS AFTER ONE PART OF THE PANEL HAS BEEN ACCIDENTALLY DISENGAGED.

NOTE: the panel assembly includes a frame, a panel and fasteners.
To remove the panel assembly, push in the disengage part of the panel and put your fingers behind the frame. Carefully pull the frame and the panel, out from the sidewall panel into the cargo compartment.
To separate the panel from the frame, put the frame on the flat surface with the panel on the top. Push backwards each latch to disengage the catch from the panel, separate the panel from the frame.
To reset the fasteners, put the frame on a flat surface with the fasteners on the topside. Push all catches that are in the disengaged position to the closed position.
To assemble the panel and the frame back together, put the panel on the center of the catches on the frame. Carefully push the panel until each catch engages. You can hear a click sound when each catch engages correctly.
To put the panel assembly back in the sidewall panel, carefully push the panel assembly until each catch engages. You can hear a click sound when each catch engages correctly.

G7508471 - G3NT1T0 - FM25Y3000000001

Installation of rapid-decompression panels after one part of the panel has been accidentaly disengaged.

...

✓ **Job set-up**

...

Procedure

...

To remove the panel assembly, push in the disengage part of the panel and put your fingers behind the frame. Carefully pull the frame and the panel, out from the sidewall panel into the cargo compartment.

To separate the panel from the frame, put the frame on the flat surface with the panel on the top. Push backwards each latch to disengage the catch from the panel, separate the panel from the frame.

To reset the fasteners, put the frame on a flat surface with the fasteners on the topside. Push all catches that are in the disengaged position to the closed position.

To assemble the panel and the frame back together, put the panel on the center of the catches on the frame. Carefully push the panel until each catch engages. You can hear a click sound when each catch engages correctly.

To put the panel assembly back in the sidewall panel, carefully push the panel assembly until each catch engages. You can hear a click sound when each catch engages correctly.

...

Close-up

NOTE: the panel assembly includes a frame, a panel and fasteners.

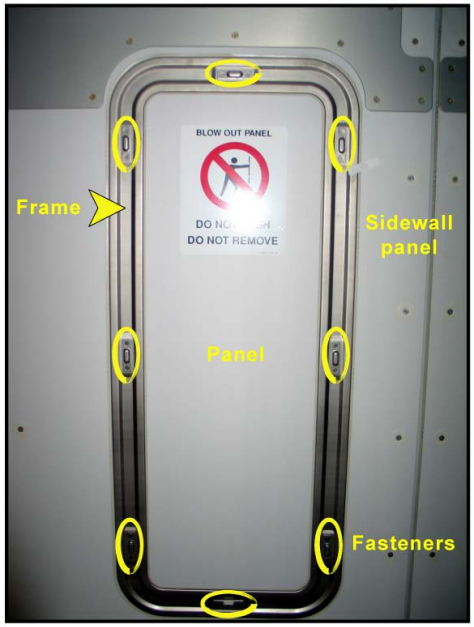

INSTALLATION OF RAPID-DECOMPRESSION PANELS AFTER ONE PART OF THE PANEL HAS BEEN ACCIDENTALLY DISENGAGED.

Installation of rapid-decompression panels after one part of the panel has been accidentaly disengaged.

...

✓ **Job set-up**

...

Procedure

...

✓ To remove the panel assembly, push in the disengage part of the panel and put your fingers behind the frame. Carefully pull the frame and the panel, out from the sidewall panel into the cargo compartment.

➡ To separate the panel from the frame, put the frame on the flat surface with the panel on the top. Push backwards each latch to disengage the catch from the panel, separate the panel from the frame.

To reset the fasteners, put the frame on a flat surface with the fasteners on the topside. Push all catches that are in the disengaged position to the closed position.

To assemble the panel and the frame back together, put the panel on the center of the catches on the frame. Carefully push the panel until each catch engages. You can hear a click sound when each catch engages correctly.

To put the panel assembly back in the sidewall panel, carefully push the panel assembly until each catch engages. You can hear a click sound when each catch engages correctly.

...

Close-up

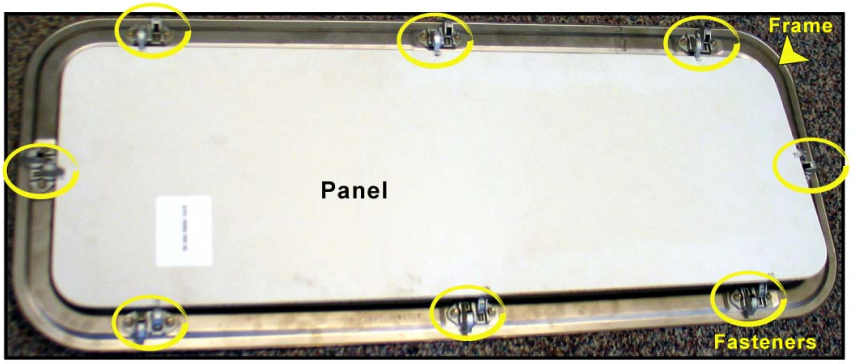

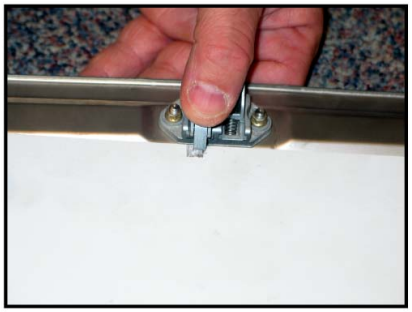

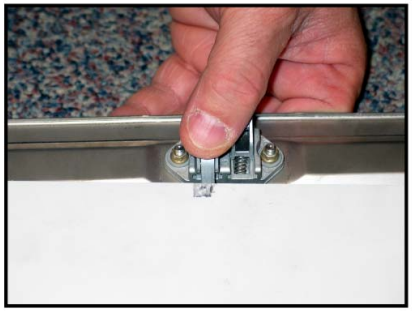

INSTALLATION OF RAPID-DECOMPRESSION PANELS AFTER ONE PART OF THE PANEL HAS BEEN ACCIDENTALLY DISENGAGED.

Installation of rapid-decompression panels after one part of the panel has been accidentaly disengaged.

...

✓ Job set-up

...

Procedure

...

✓ To remove the panel assembly, push in the disengage part of the panel and put your fingers behind the frame. Carefully pull the frame and the panel, out from the sidewall panel into the cargo compartment.

✓ To separate the panel from the frame, put the frame on the flat surface with the panel on the top. Push backwards each latch to disengage the catch from the panel, separate the panel from the frame.

➡ To reset the fasteners, put the frame on a flat surface with the fasteners on the topside. Push all catches that are in the disengaged position to the closed position.

To assemble the panel and the frame back together, put the panel on the center of the catches on the frame. Carefully push the panel until each catch engages. You can hear a click sound when each catch engages correctly.

To put the panel assembly back in the sidewall panel, carefully push the panel assembly until each catch engages. You can hear a click sound when each catch engages correctly.

...

Close-up

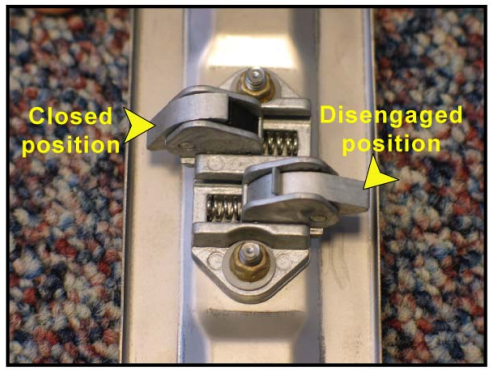

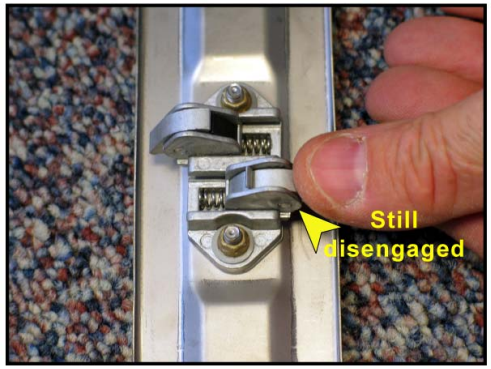

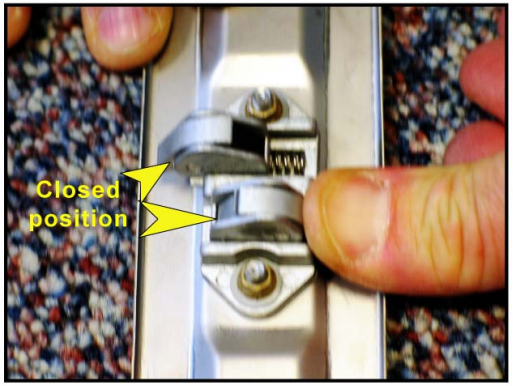

INSTALLATION OF RAPID-DECOMPRESSION PANELS AFTER ONE PART OF THE PANEL HAS BEEN ACCIDENTALLY DISENGAGED.

G7508471 - G3NT1T0 - FM25Y300000001

Installation of rapid-decompression panels after one part of the panel has been accidentaly disengaged.

...

✓ **Job set-up**

...

Procedure

...

✓ To remove the panel assembly, push in the disengage part of the panel and put your fingers behind the frame. Carefully pull the frame and the panel, out from the sidewall panel into the cargo compartment.

✓ To separate the panel from the frame, put the frame on the flat surface with the panel on the top. Push backwards each latch to disengage the catch from the panel, separate the panel from the frame.

✓ To reset the fasteners, put the frame on a flat surface with the fasteners on the topside. Push all catches that are in the disengaged position to the closed position.

➡ To assemble the panel and the frame back together, put the panel on the center of the catches on the frame. Carefully push the panel until each catch engages. You can hear a click sound when each catch engages correctly.

To put the panel assembly back in the sidewall panel, carefully push the panel assembly until each catch engages. You can hear a click sound when each catch engages correctly.

...

Close-up

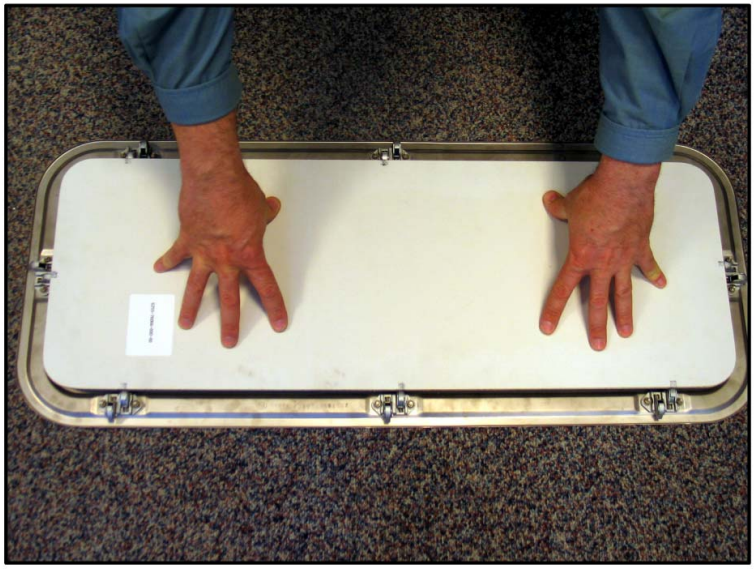

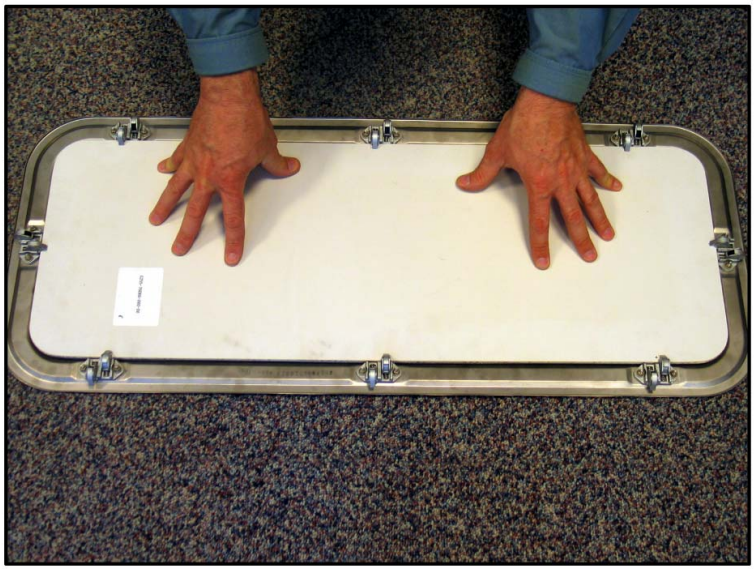

INSTALLATION OF RAPID-DECOMPRESSION PANELS AFTER ONE PART OF THE PANEL HAS BEEN ACCIDENTALLY DISENGAGED.

Installation of rapid-decompression panels after one part of the panel has been accidentaly disengaged.

...

✓ **Job set-up**

...

Procedure

...

✓ To remove the panel assembly, push in the disengage part of the panel and put your fingers behind the frame. Carefully pull the frame and the panel, out from the sidewall panel into the cargo compartment.

✓ To separate the panel from the frame, put the frame on the flat surface with the panel on the top. Push backwards each latch to disengage the catch from the panel, separate the panel from the frame.

✓ To reset the fasteners, put the frame on a flat surface with the fasteners on the topside. Push all catches that are in the disengaged position to the closed position.

✓ To assemble the panel and the frame back together, put the panel on the center of the catches on the frame. Carefully push the panel until each catch engages. You can hear a click sound when each catch engages correctly.

➡ To put the panel assembly back in the sidewall panel, carefully push the panel assembly until each catch engages. You can hear a click sound when each catch engages correctly.

...

Close-up

INSTALLATION OF RAPID-DECOMPRESSION PANELS AFTER ONE PART OF THE PANEL HAS BEEN ACCIDENTALLY DISENGAGED.

Installation of rapid-decompression panels after one part of the panel has been accidentaly disengaged.

...

✓ **Job set-up**

...

✓ **Procedure**

...

✓ **To remove the panel assembly, push in the disengage part of the panel and put your fingers behind the frame. Carefully pull the frame and the panel, out from the sidewall panel into the cargo compartment.**

✓ **To separate the panel from the frame, put the frame on the flat surface with the panel on the top. Push backwards each latch to disengage the catch from the panel, separate the panel from the frame.**

✓ **To reset the fasteners, put the frame on a flat surface with the fasteners on the topside. Push all catches that are in the disengaged position to the closed position.**

✓ **To assemble the panel and the frame back together, put the panel on the center of the catches on the frame. Carefully push the panel until each catch engages. You can hear a click sound when each catch engages correctly.**

✓ **To put the panel assembly back in the sidewall panel, carefully push the panel assembly until each catch engages. You can hear a click sound when each catch engages correctly.**

...

✓ **Close-up**

TASK COMPLETED

✓

INSTALLATION OF RAPID-DECOMPRESSION PANELS AFTER ONE PART OF THE PANEL HAS BEEN ACCIDENTALLY DISENGAGED.

This Page Intentionally Left Blank

G7508471 - G3NT1T0 - FM25Y3000000001

AIRBUS S.A.S.
31707 BLAGNAC cedex, FRANCE
STM
REFERENCE G7508471
NOVEMBER 2008
PRINTED IN FRANCE
AIRBUS S.A.S. 2008
ALL RIGHTS RESERVED

AN EADS COMPANY

A330-200/300
TECHNICAL TRAINING MANUAL
MAINTENANCE COURSE - T1 (LVL 2&3) (RR Trent 700)
FIRE PROTECTION

This document must be used for training purposes only

Under no circumstances should this document be used as a reference

It will not be updated.

All rights reserved
No part of this manual may be reproduced in any form,
by photostat, microfilm, retrieval system, or any other means,
without the prior written permission of AIRBUS S.A.S.

AIRBUS Environmental Recommendation
Please consider your environmental responsability before printing this document.

FIRE PROTECTION

Fire Protection Line Maintenance Briefing (2) 2

ENGINE FIRE PROTECTION

Engine Fire Protection D/O (3) 22

APU FIRE PROTECTION

APU Fire Protection D/O (3) 42

CABIN AND LAVATORY FIRE PROTECTION

Cabin & Lavatories Fire Protection D/O (3) 48

CARGO FIRE PROTECTION

Cargo Fire Protection D/O (3) 60

AVIONICS SMOKE DETECTION

Avionics Smoke Detection D/O (3) 76

FIRE PROTECTION LINE MAINTENANCE BRIEFING (2)

SYSTEM OVERVIEW

The engine and APU fire protection is fulfilled by two sub-systems: the fire detection system and the fire extinguishing system.

ENGINE FIRE PROTECTION

Engine fire protection is done by two systems: the fire detection system and the fire extinguishing system. The engine Fire Detection Unit (FDU) monitors two engine detector loops. Each loop has detector elements located in critical engine areas and connected in parallel. Each engine type has a unique configuration of detector element locations. Warnings are generated according to an AND logic (both loops detect a FIRE). There are two fire bottles located in the engine pylon for engine FIRE extinguishing. The engine fire protection system gives aural and visual indications for FIRE and FAULT conditions.

G7508471 - G3NT1T0 - FM26B100000003

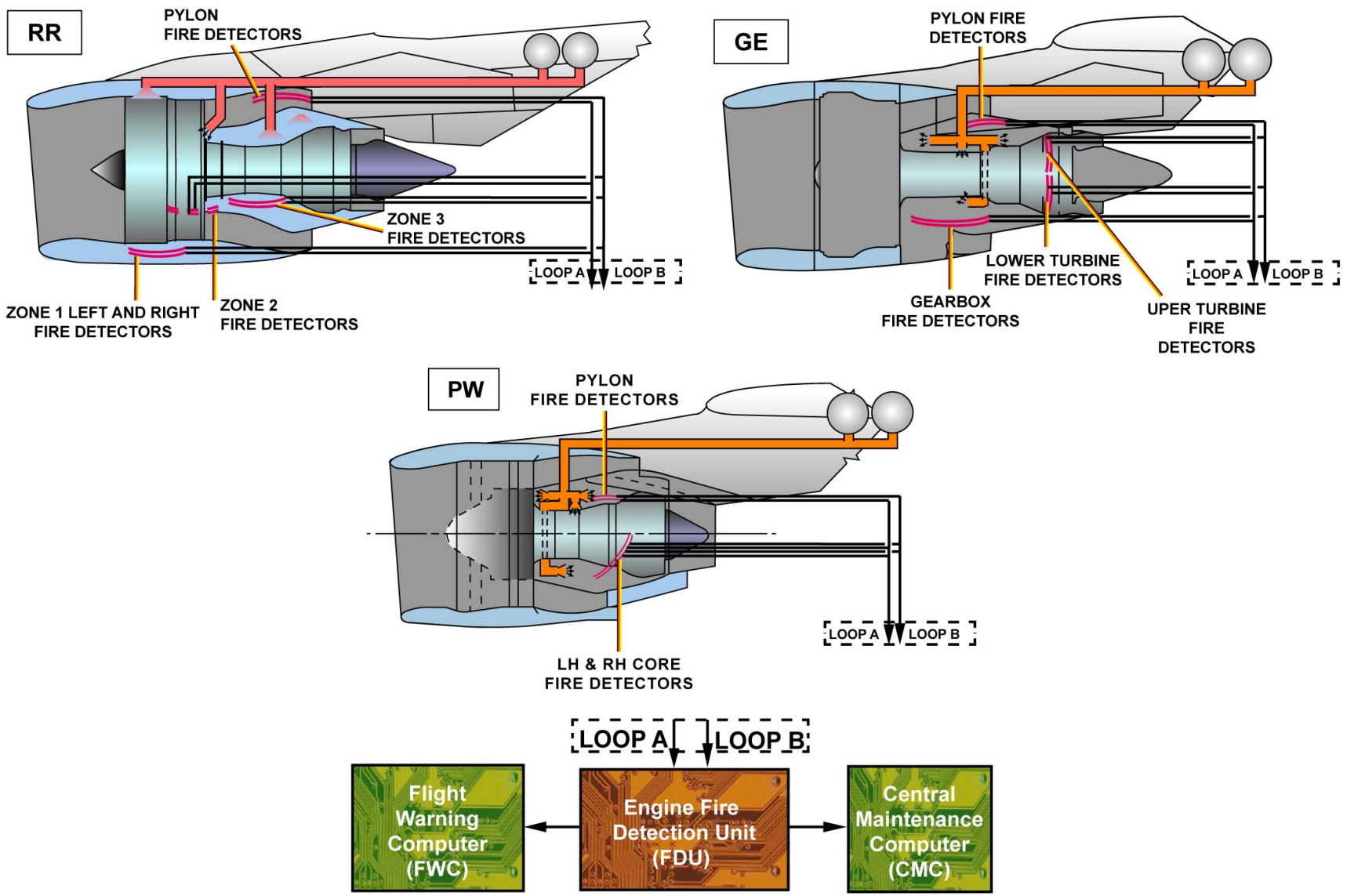

SYSTEM OVERVIEW - ENGINE FIRE PROTECTION

G7508471 - G3NT1T0 - FM26B100000003

FIRE PROTECTION LINE MAINTENANCE BRIEFING (2)

SYSTEM OVERVIEW (continued)

APU FIRE PROTECTION

The APU fire protection is done by two systems: the fire detection system and the fire extinguishing system. The APU Fire Detection Unit (FDU) monitors two detector loops. Each loop has a detector element located in the APU compartment. Warnings are generated according to an AND logic (both loops detect a FIRE). There is one fire bottle located in the aft fuselage for APU FIRE extinguishing. The APU fire can be extinguished manually or automatically.
The APU fire protection system gives aural and visual indications for FIRE and FAULT conditions. In case of a FIRE when the A/C is on the ground, the Automatic Fire Extinguishing Control Unit (AFECU) initiates an auto shutdown of the APU and discharges the extinguishing bottle.

G7508471 - G3NT1T0 - FM26B100000003

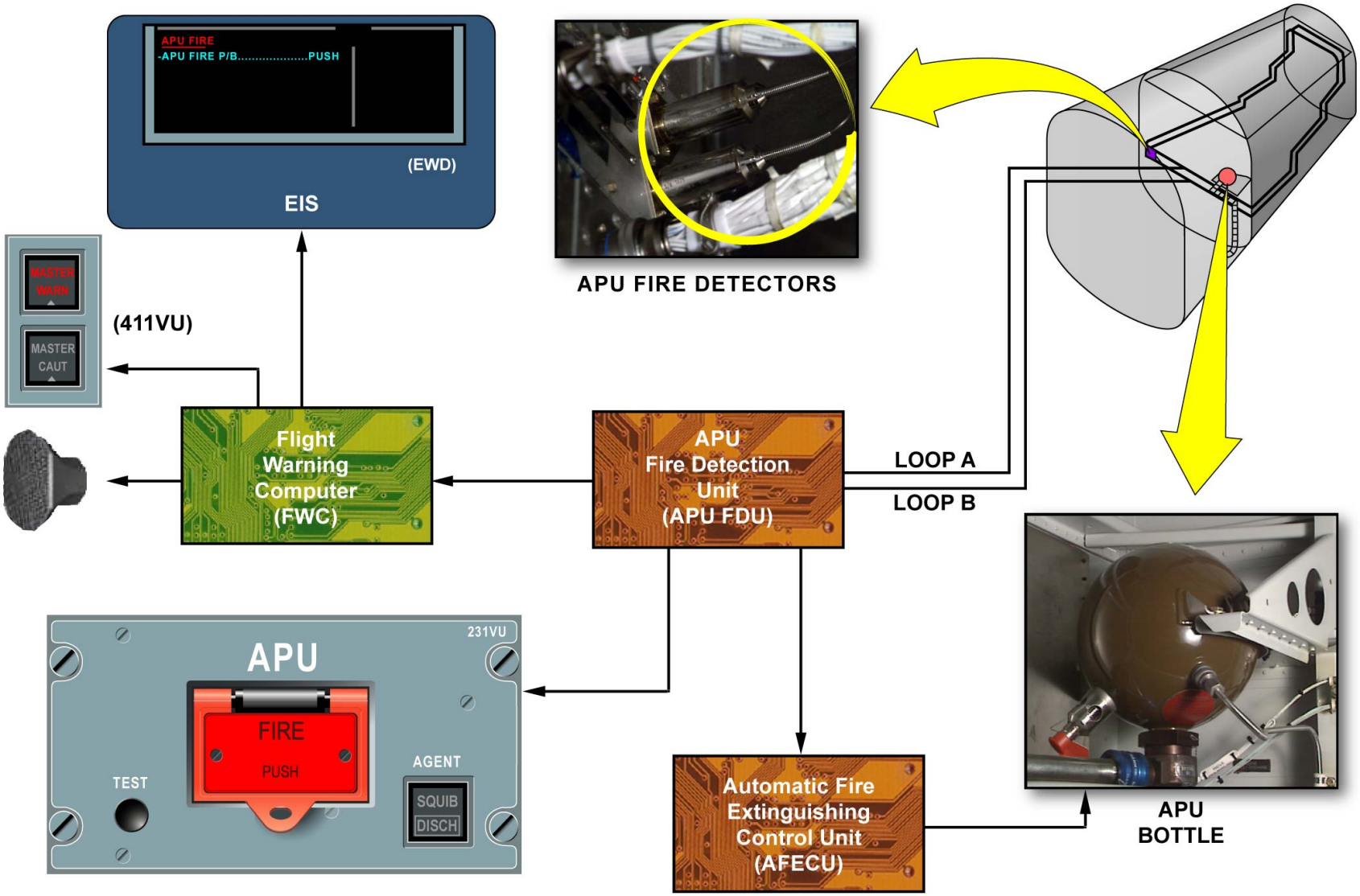

SYSTEM OVERVIEW - APU FIRE PROTECTION

G7508471 - G3NT1T0 - FM26B100000003

FIRE PROTECTION LINE MAINTENANCE BRIEFING (2)

SYSTEM OVERVIEW (continued)

AVIONICS COMPARTMENT SMOKE DETECTION

The avionics compartment smoke detection is done by two smoke detectors installed on the air extraction duct of the ventilation system. The detectors send signals via a dual loop to the Smoke Detection Control Unit (SDCU). The SDCU gives aural and visual indications in SMOKE and FAULT conditions.

G7508471 - G3NT1T0 - FM26B100000003

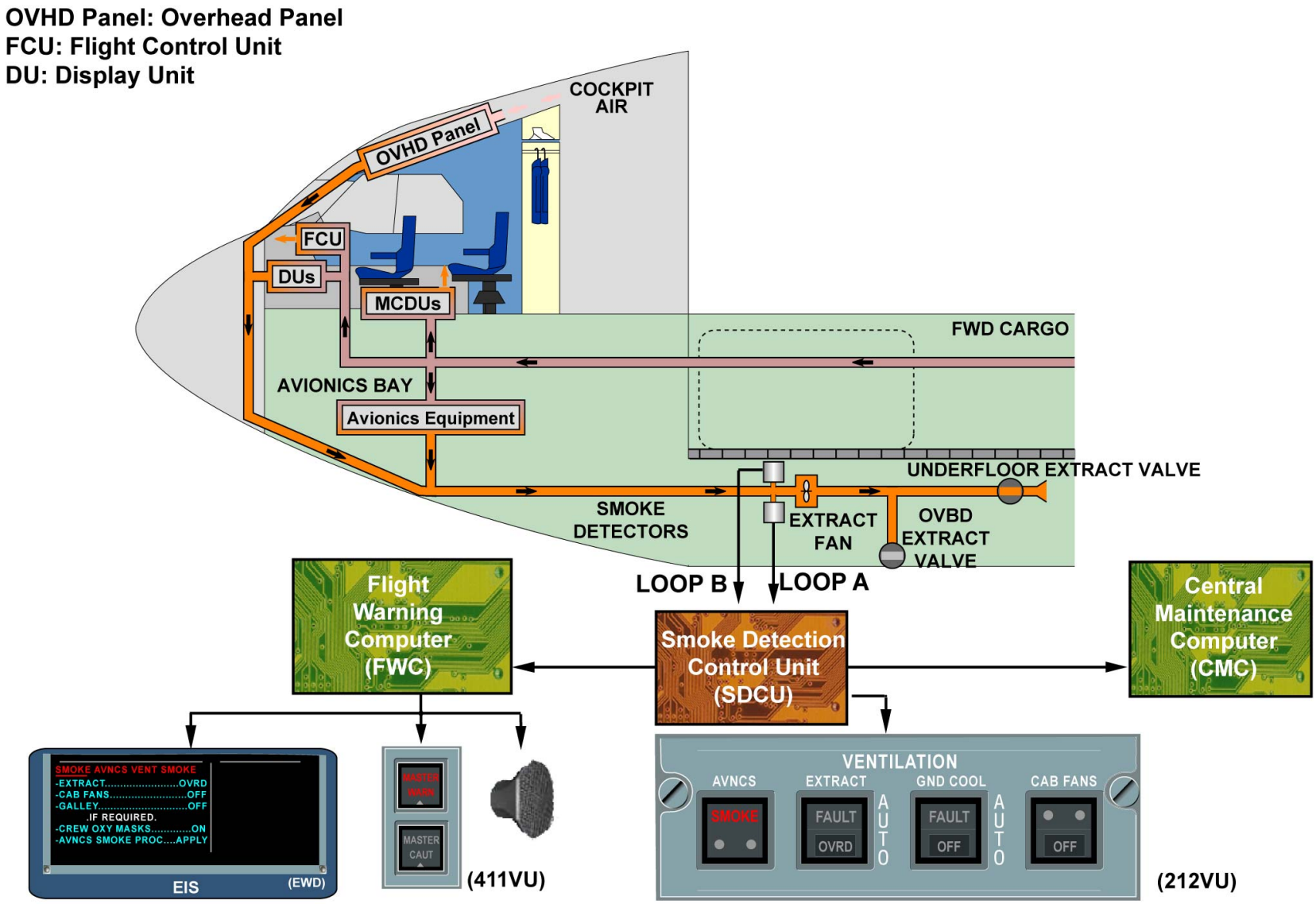

SYSTEM OVERVIEW - AVIONICS COMPARTMENT SMOKE DETECTION

G7508471 - G3NT1T0 - FM26B100000003

FIRE PROTECTION LINE MAINTENANCE BRIEFING (2)

SYSTEM OVERVIEW (continued)

CARGO COMPARTMENTS SMOKE PROTECTION

Each cargo compartment has cavities:
- 2 cavities in the FWD cargo compartment,
- 2 cavities in the AFT cargo compartment,
- 1 cavity in the BULK cargo compartment.

Each cavity holds 2 smoke detectors and a fire-extinguishing nozzle.
The cargo compartments smoke protection is done by two systems: the cargo smoke detection system and the cargo fire extinguishing system. The Smoke detectors are optical type. The smoke detectors are connected to the SCDU via loop A and loop B.
When the SDCU confirms smoke detection, it triggers warnings in the cockpit:
- a Continuous Repetitive Chime (CRC), a MASTER WARNing and an EWD fault message through the Flight Warning Computer (FWC).
- on the CARGO SMOKE control panel.

When smoke is detected, isolation valves optionally installed in the affected compartment will automatically close and the extraction fan will stop.
Two fire extinguisher bottles located in the forward cargo compartment are also used for fire extinguishing in the Lower Deck Cargo Compartments (LDCCs). Each bottle has two discharge heads, one dedicated for the forward cargo compartment and one for the AFT/BULK cargo compartment. The extinguishing agent flows through rigid pipes and is discharged through the extinguisher nozzles in the forward, aft or bulk compartment.
The fire extinguisher bottles are discharged from the cockpit by the CARGO SMOKE panel AGENT pushbuttons.

G7508471 - G3NT1T0 - FM26B100000003

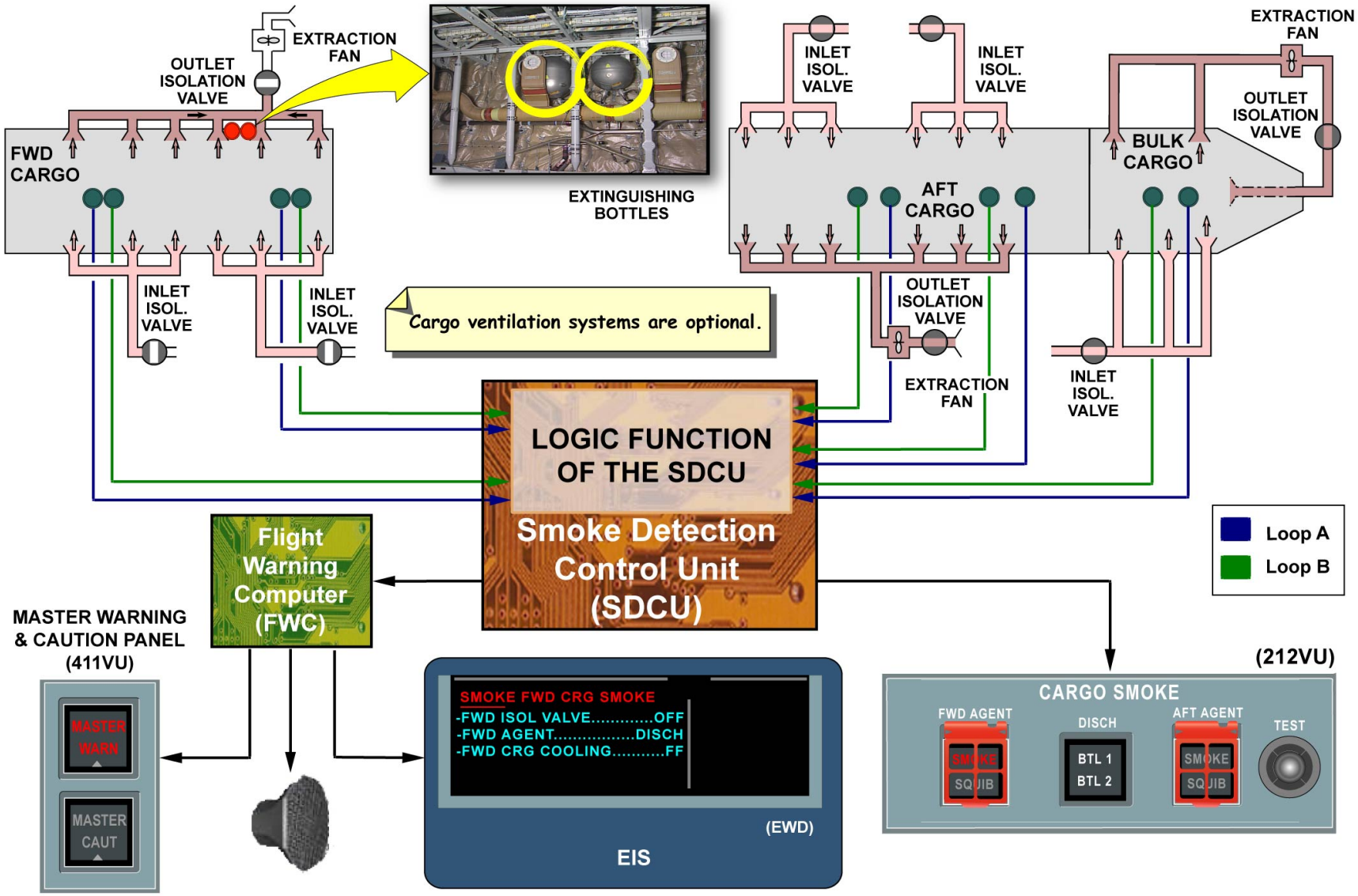

SYSTEM OVERVIEW - CARGO COMPARTMENTS SMOKE PROTECTION

G7508471 - G3NT1T0 - FM26B100000003

FIRE PROTECTION LINE MAINTENANCE BRIEFING (2)

SYSTEM OVERVIEW (continued)

LAVATORY SMOKE DETECTION AND FIRE EXTINGUISHING

The lavatory smoke detection system and the waste bin fire extinguishing system fulfill the lavatory fire protection. The system is monitored by the SDCU, which sends signals to the FWC, and to the Cabin Intercommunication and Data System (CIDS). The SDCU, the FWC, and the CIDS give aural and visual warning indications in the cockpit and in the cabin in SMOKE and FAULT conditions.
Each lavatory has a single smoke detector located in the air extraction duct in the lavatory ceiling. A fire extinguisher bottle is installed above the waste bin in each lavatory. If a fire starts in the waste bin the fire extinguisher discharges automatically. Portable fire extinguishers are located throughout the cabin and cockpit.

G7508471 - G3NT1T0 - FM26B1000000003

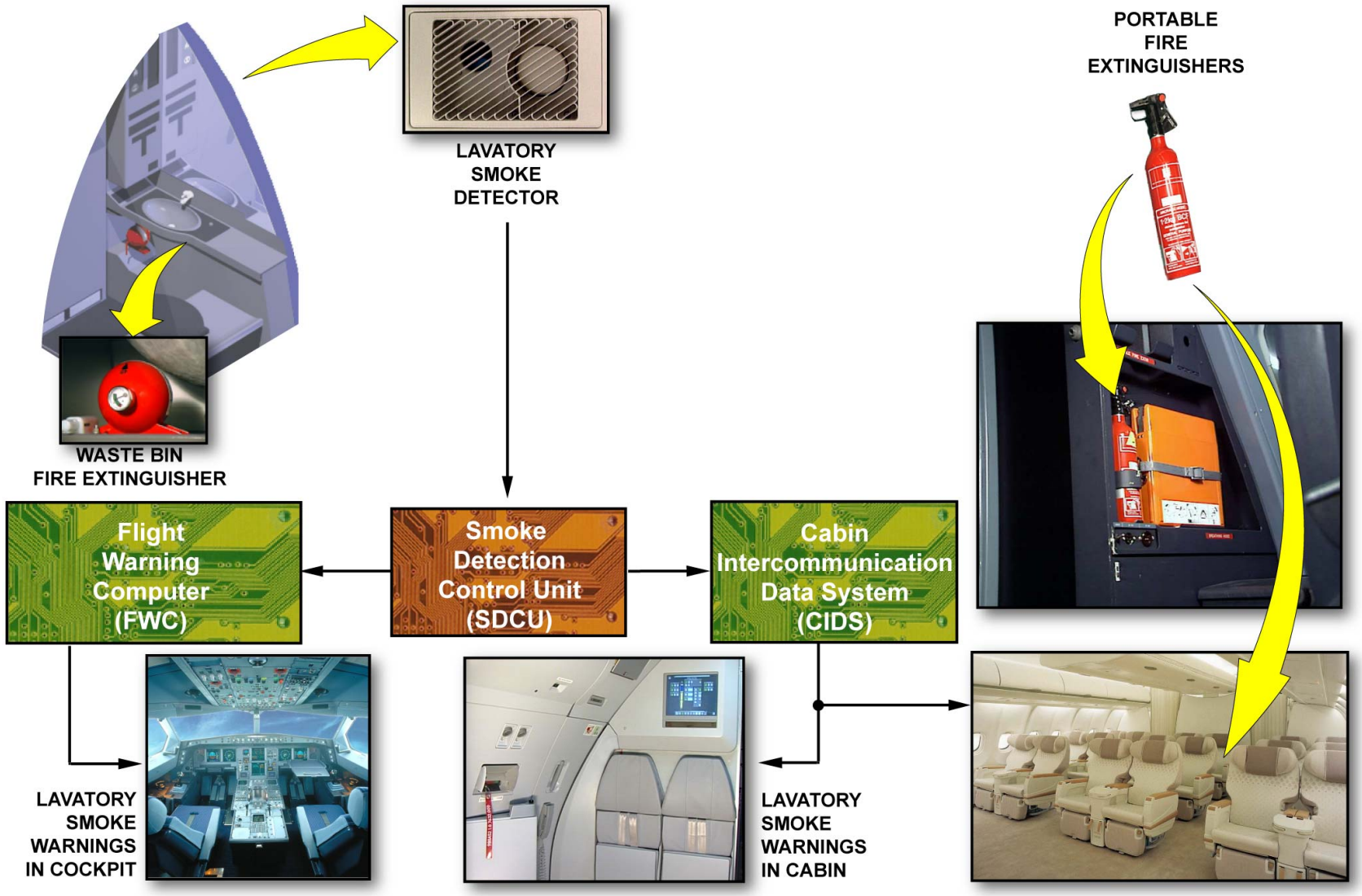

SYSTEM OVERVIEW - LAVATORY SMOKE DETECTION AND FIRE EXTINGUISHING

G7508471 - G3NT1T0 - FM26B100000003

FIRE PROTECTION LINE MAINTENANCE BRIEFING (2)

DAILY CHECKS

The ENGINE and APU FIRE tests must be done prior to start.
Press and hold the TEST pushbutton on the ENGine or APU fire panel.
The test will trigger all of the FIRE warnings in the cockpit.
During the engine fire test:
- ENG FIRE lights on the overhead panel come on,
- FIRE lights on the ENGINE START panel come on,
- both SQUIB lights come on for each engine,
- both DISCHarge lights come on for each engine,
- both red MASTER WARNing lights come on, on the glare shield panel,
- CRC sounds,
- engine FIRE procedure displayed on the upper ECAM DU,
- ENGINE page displayed on the lower ECAM DU.

During the APU fire test:
- FIRE light on the overhead panel comes on,
- SQUIB light comes on,
- DISCH light comes on,
- both red MASTER WARN lights come on, on the glare shield panel,
- continuous chime sounds,
- APU FIRE procedure is displayed on the upper ECAM DU,
- APU page is displayed on the lower ECAM DU.

The APU fire bottle is located forward of the APU firewall. Prior to starting the APU, the bottle pressure may be checked by means of the red disk located on the rear fuselage on the lower left hand side. The red disk is connected to an overpressure discharge tube. If the bottle pressure becomes excessive, the bottle will discharge to protect the structure and the red disk will blow out.
The cargo compartments should be checked for integrity. Any damage to the cargo compartment ceiling or sidewall liner should be repaired immediately. If the compartment is ventilated, the ventilation isolation valves are automatically closed when smoke is detected. A hole in the liner could induce airflow through the compartment, compromising the fire protection of the compartments. If the compartment is not ventilated, no airflow is permitted.

G7508471 - G3NT1T0 - FM26B100000003

Engine fire test.

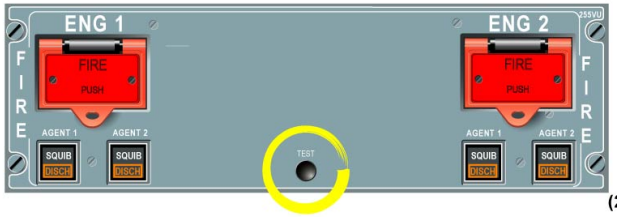

(255VU)

(411VU)

(412VU)

APU fire test.

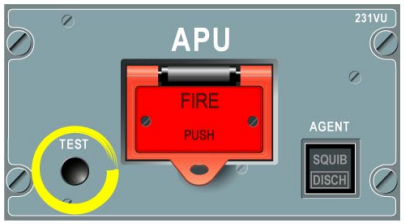

Engine 1 is shown as an example.

(EWD)

(125VU)

(EWD)

ROLLS ROYCE engine shown as example.

SYSTEM DISPLAY (SD)

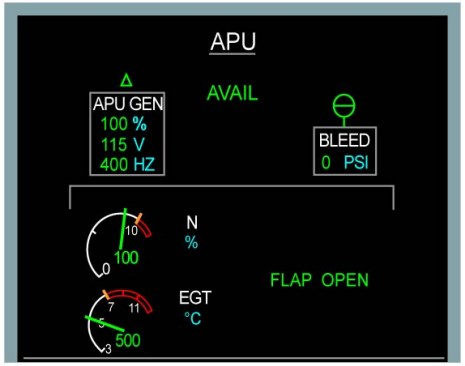

SYSTEM DISPLAY (SD)

DAILY CHECKS

Check red disc on walk-around.

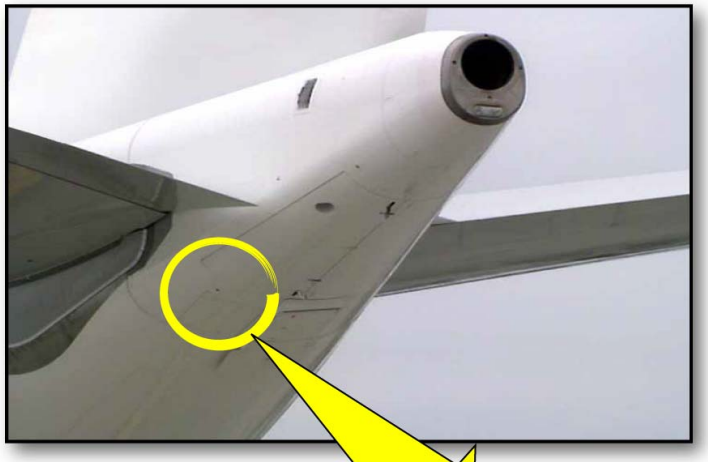

Check cargo compartment sidewall integrity.

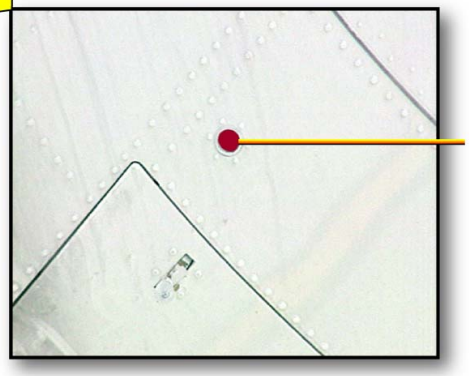

APU FIRE BOTTLE
DISCHARGE INDICATOR

DAILY CHECKS

G7508471 - G3NT1T0 - FM26B100000003

This Page Intentionally Left Blank

G7508471 - G3NT1T0 - FM26B1000000003

FIRE PROTECTION LINE MAINTENANCE BRIEFING (2)

MEL/DEACTIVATION

Dispatch procedures

LAVATORY SMOKE DETECTION

Each lavatory has a single detector. If this detector fails, the aircraft may be dispatched with the lavatory locked closed and the waste bin empty. Periodic smoke checks should also be done by the cabin staff. To lock the lavatory, lift the "LAVATORY" cover plate on the outside of the door and slide the unlocking pin to the LOCK position.

G7508471 - G3NT1T0 - FM26B100000003

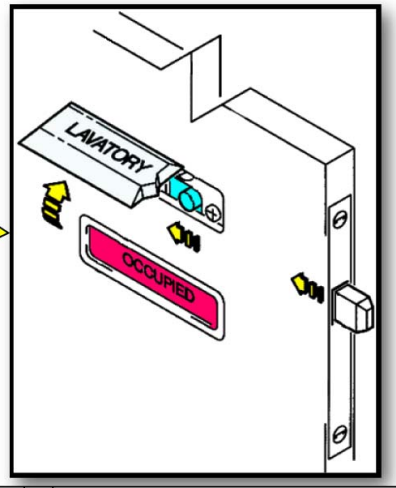

MEL

R R R R R R R R R R	17-01 Lavatory Smoke Detection System	B	-	-	(o) (m)	a) One or more may be inoperative provided: 1) The associated lavatory fire extinguishing system is checked operative before each flight, and 2) Absence of smoke in the associated lavatory is checked every 15 minutes. -or-
		C	-	-	(o)	b) One or more may be inoperative provided: 1) The associated lavatory waste receptacle is empty, and 2) The associated lavatory door is locked closed and placarded inoperative, and. 3) The lavatory is not used for any purpose, and 4) A procedure is used to check periodically absence of smoke in associated lavatory.

MEL/DEACTIVATION - LAVATORY SMOKE DETECTION

G7508471 - G3NT1T0 - FM26B100000003

FIRE PROTECTION LINE MAINTENANCE BRIEFING (2)

MEL/DEACTIVATION (continued)

APU FIRE EXTINGUISHER OVERPRESSURE INDICATION (RED DISK) MISSING

The aircraft may be dispatched as per the MEL with the APU fire extinguisher bottle overpressure indication missing. The conditions for dispatch include testing the SQUIB integrity and checking the extinguisher bottle pressure switch before the first flight of the day.
The following procedure is:
- do the APU FIRE test,
- get access to the APU extinguisher bottle and make sure that communications with the cockpit is established,
- insert a 3/32" Allen-key into the pressure switch test socket and turn,
- in the cockpit, the DISCH light comes on, on the APU AGENT pushbutton on the APU FIRE panel,
- close up.

G7508471 - G3NT1T0 - FM26B100000003

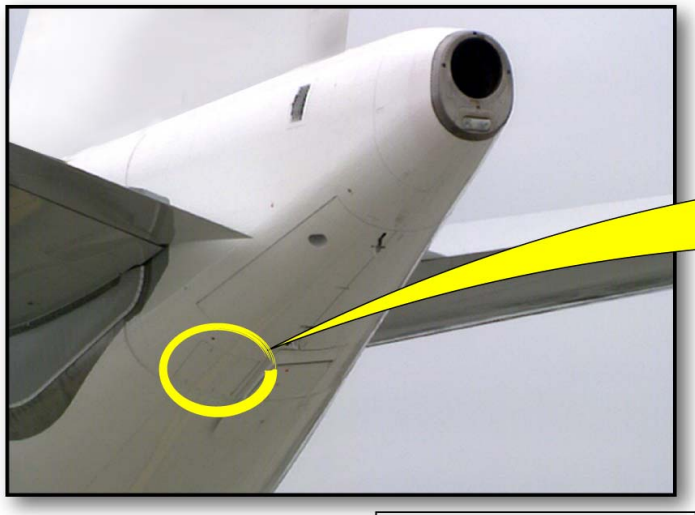

MEL

21-04	APU fire extinguisher Overpressure indication (Red Disk)	C	1	0	(m) May be inoperative provided: (1) The squib test is used to check the squib integrity, and (2) The bottle pressure switch is checked operative before the first flight of each day.

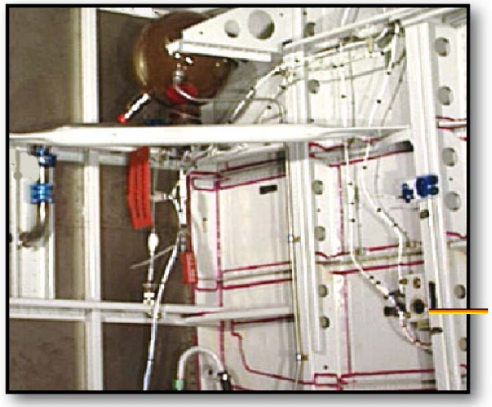

MEL/DEACTIVATION - APU FIRE EXTINGUISHER OVERPRESSURE INDICATION (RED DISK) MISSING

G7508471 - G3NT1T0 - FM26B100000003

FIRE PROTECTION LINE MAINTENANCE BRIEFING (2)

MAINTENANCE TIPS

If an APU fire is detected when the aircraft is on the ground, the AFECU operates the APU fire extinguishing system automatically. The AFECU can be tested on ground via the MCDU. However this test must be performed while the APU is NOT running, otherwise this test will lead to APU emergency shutdown, without fire extinguisher discharge. This test is initiated by selecting the System Report/Test/FIRE PROT, ENG/APU menu and then selecting the APU AFE/TEST key.
One squib of each engine fire bottle and one squib of the APU fire bottle are supplied by 28V DC from a HOT bus. When doing maintenance task with the FIRE P/B released out, make sure to pull all squib C/Bs (4 for the Engine / 2 for the APU) to protect against accidental extinguisher bottle discharge. If the C/Bs are not pulled, the engine or APU fire bottle may be discharged even without power on the aircraft.
When you push the TEST P/B on the CARGO SMOKE panel for approximately 2 s, the SDCU starts a test of the smoke detectors installed in the cargo and avionic compartments. It is highly recommended to launch this PTT test only after the SDCU power-up test has been completed in order to avoid the interruption of the test or a failure of this test. Therefore, wait at least 4 minutes after SDCU power-up before doing any PTT test on the CARGO SMOKE panel.

G7508471 - G3NT1T0 - FM26B100000003

AIRBUS TRAINING A330 SIMULATOR FLIGHT CREW OPERATING MANUAL	FIRE PROTECTION	1.26.60	P 1
	ELECTRICAL SUPPLY	SEQ 001	REV 15

BUS EQUIPMENT LIST

R

			NORM			EMER ELEC		
			AC	DC	DC BAT	AC ESS	DC ESS	HOT
ENG/APU	FIRE DETECTION	ENG LOOP A					X	
		ENG LOOP B		DC2				
		APU LOOP A					X	
		APU LOOP B			X			
	FIRE EXTINGUISHING	ENGINES						
		BTL 1 SQUIB A						HOT 2
		BTL 1 SQUIB B		DC 2				
		BTL 2 SQUIB A						HOT 1
		BTL 2 SQUIB B		DC 2				
		APU						
		BTL SQUIB A						HOT 1
		BTL SQUIB B			X			
		APU AUTO EXT						HOT 2
CARGO LAV AVIONICS	SDCU 1						SHED	
	SDCU 2			DC 2				
	CARGO SQUIB A							HOT 1
	CARGO SQUIB B			DC 2				
LDMCRC ◁	SMOKE DETECTION	SDCU 1					SHED	
		SDCU 2		DC 2			SHED	
	FIRE EXTINGUISHING			DC 2				
FCRC ◁	SMOKE DETECTION	SDCU 1					SHED	
		SDCU 2		DC 2				

MAINTENANCE TIPS

G7508471 - G3NT1T0 - FM26B100000003

ENGINE FIRE PROTECTION D/O (3)

ENGINE FIRE PROTECTION DESCRIPTION

DETECTORS

The fire detectors are installed in pair on pre-formed, stainless steel supports on the engine. The fire detection system is of the electro-pneumatic type.

Each fire detector is made up of a sensing element, and a responder assembly. The detector is pneumatically operated by heating its sensing element, which contains helium gas and a hydrogen-charged titanium core material. The sensing element reacts according to the ideal gas law. One end of the sensing element is hermetically soldered and the other one is connected to a stainless steel body called responder. This body contains a chamber connected to two pressure switches: an ALARM switch and a MONITOR switch (or INTEGRITY switch).

In normal state, the MONITOR switch is closed and the ALARM switch is open.

In alarm state: the effect of an average temperature expands the inert gas (helium) which in turn closes the ALARM switch, or the effect of heat caused by impinging flame or hot gas, releases active gas from the hybrid core which in turn closes the ALARM switch. In both cases the detector sends a fire signal.

In fault state: in the event of gas pressure loss (pipe fracture or cut off due to a torching flame), the INTEGRITY switch opens and generates a fault signal.

G7508471 - G3NT1T0 - FM26D1000000006

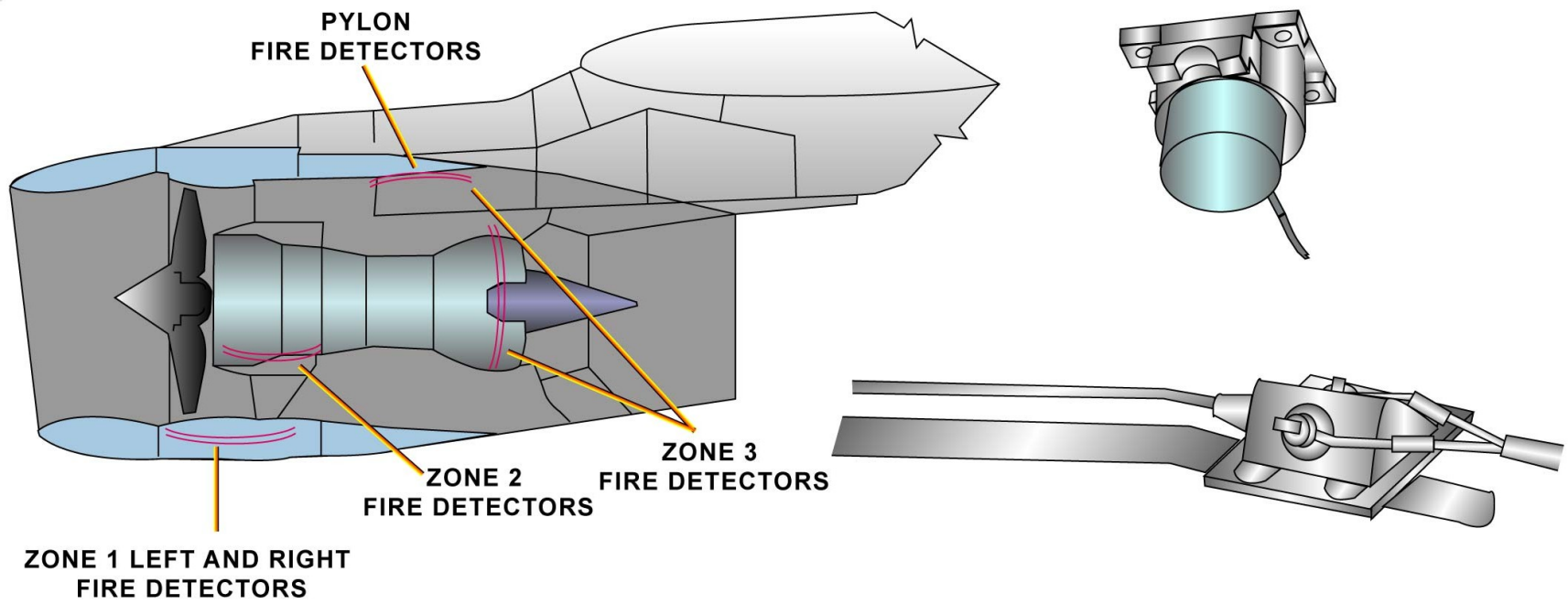

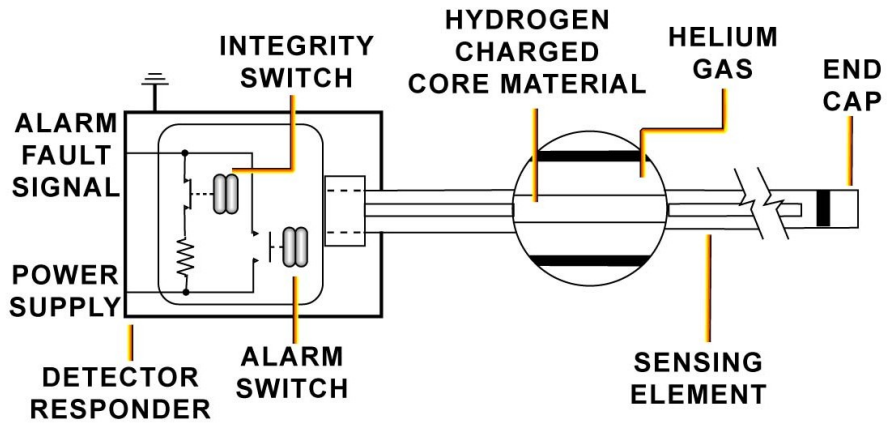

ENGINE FIRE PROTECTION DESCRIPTION - DETECTORS

G7508471 - G3NT1T0 - FM26D100000006

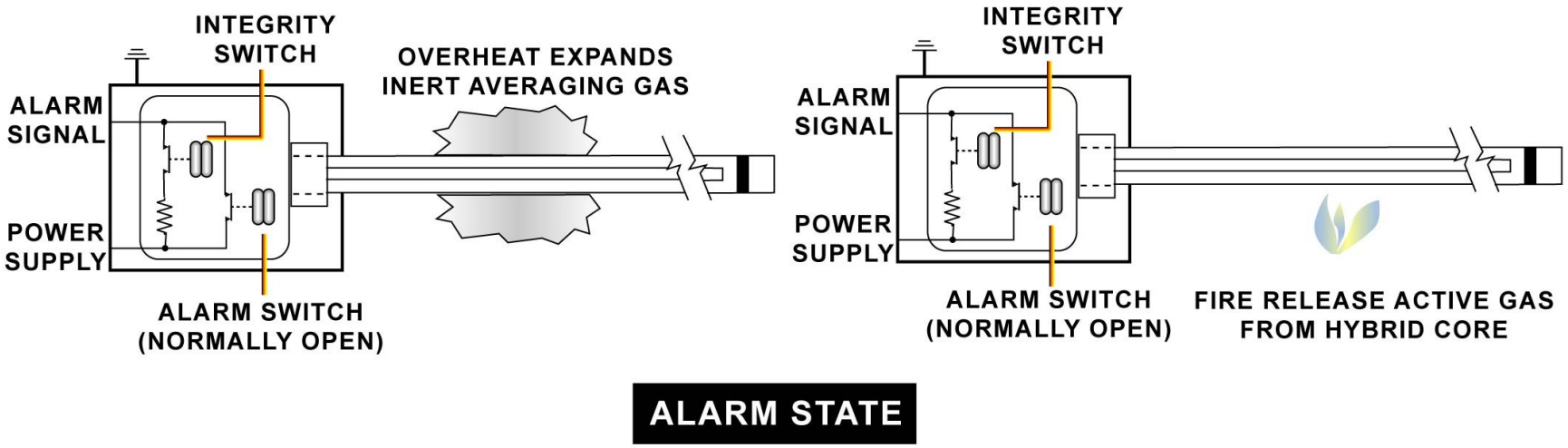

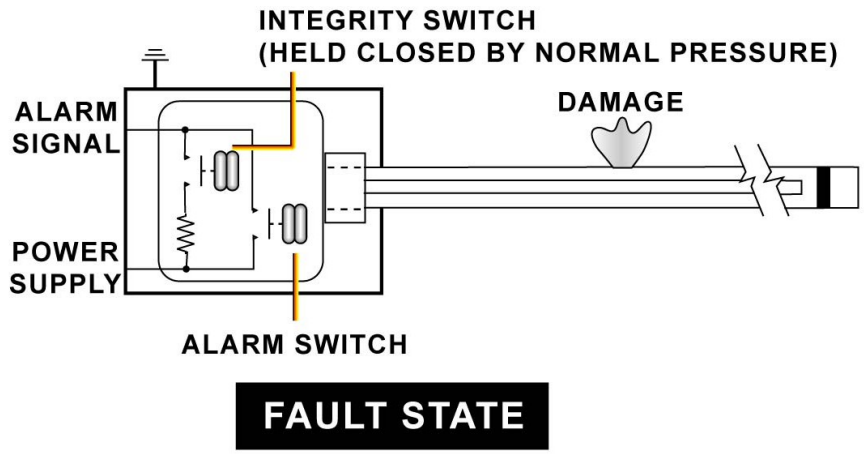

ENGINE FIRE PROTECTION DESCRIPTION - DETECTORS

G7508471 - G3NT1T0 - FM26D100000006

This Page Intentionally Left Blank

G7508471 - G3NT1T0 - FM26D1000000006

ENGINE FIRE PROTECTION D/O (3)

ENGINE FIRE PROTECTION DESCRIPTION (continued)

LOOPS

The fire detectors are installed in pairs (loop A/loop B). Each fire detection loop comprises the five fire detectors connected in parallel. On each engine, there are two continuous loops for fire detection. The loops are connected in parallel to the Fire Detection Unit (FDU). Each fire detection loop is connected to a separate channel of the FDU and processes signals from the detectors.
The connection is made through an AND logic to avoid spurious fire warnings. In case of failure of one loop, the AND logic becomes an OR logic. The A/C can be released in this configuration.

G7508471 - G3NT1T0 - FM26D1000000006

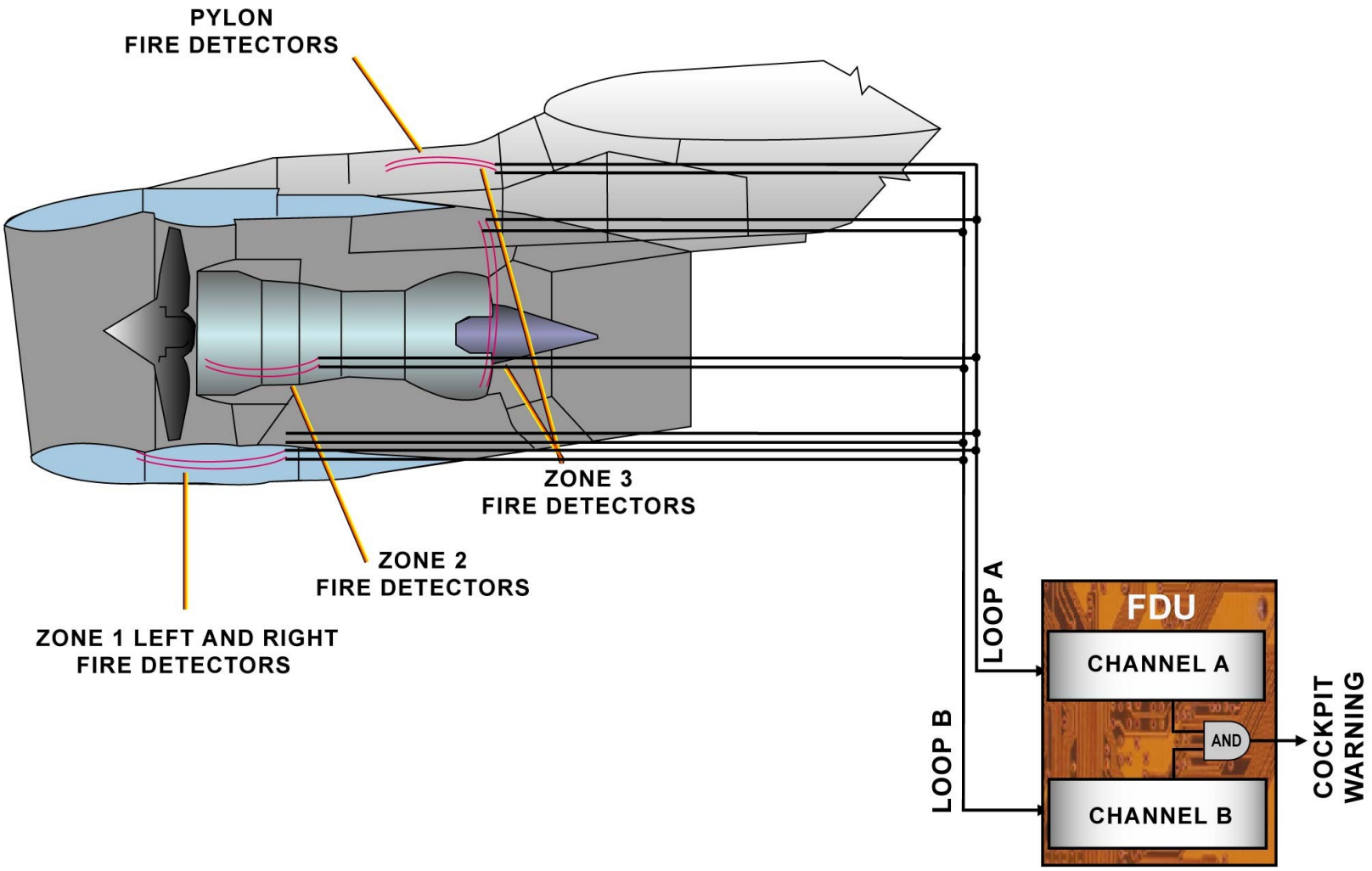

ENGINE FIRE PROTECTION DESCRIPTION - LOOPS

G7508471 - G3NT1T0 - FM26D1000000006

ENGINE FIRE PROTECTION D/O (3)

ENGINE FIRE PROTECTION DESCRIPTION (continued)

BOTTLE

The distribution system for each engine includes two fire extinguisher bottles, pipes and nozzles. The fire extinguishing distribution system is routed from the fire extinguisher bottles located in each engine pylon to the zone 1 (accessory compartment), zone 2 (FWD compressor compartment), zone 3 (core compartment).
The fire extinguisher bottle is of the high-rate discharge type and is made up of:
- a spherical container which contains an extinguishing agent (Halon 1301),
- a discharge head,
- a cartridge.

On the spherical container there are a pressure switch, a filling fitting and two outlet ports and frangible discs.
The pressure switch monitors the fire extinguisher bottle (discharge or leakage). It is electrically connected to the FDU which generates a discharge signal to the DISCH legend on the ENGine/FIRE control panel. The pressure switch installed on the fire extinguisher bottle can be tested manually.
The filling fitting assemblies are used to fill the fire extinguisher bottle.
The frangible disc installed on the outlet port is ruptured when the cartridge is fired. The fire extinguishing agent is then discharged via the discharge head in the fire extinguishing distribution system. A strainer retains the fragments from the diaphragm. The frangible disc also operates as an overpressure device in case of excessive pressure in the fire extinguisher bottle.
The cartridge is installed on the discharge head and contains explosive powder. The powder is fired by two filaments supplied with 28 VDC. Each filament is connected to a ground wire and can supply the electrical power necessary for the firing, if the other filament fails.

G7508471 - G3NT1T0 - FM26D1000000006

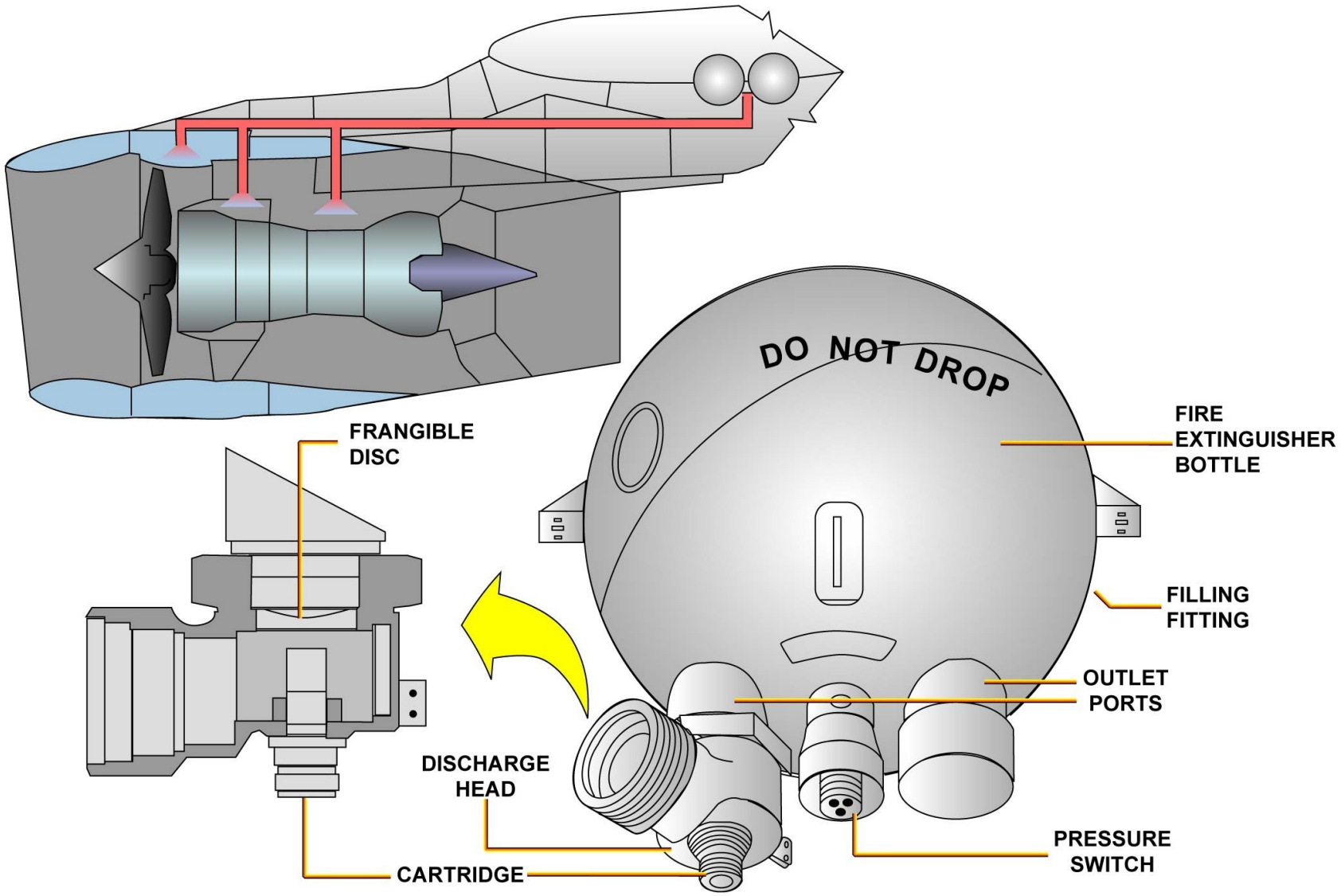

ENGINE FIRE PROTECTION DESCRIPTION - BOTTLE

G7508471 - G3NT1T0 - FM26D100000006

ENGINE FIRE PROTECTION D/O (3)

ENGINE FIRE PROTECTION DESCRIPTION (continued)

FDU (FIRE DETECTION UNIT)

The FDU processes the signals generated by the responder of the detectors. The FDU has three functional modules:
- two independent channels which have their own power supply (1 channel for each detection loop),
- one monitoring microcontroller circuitry (for maintenance purpose only).

The two channels, A and B, normally operate together, with an AND logic. The two channels are identical and, if one loop is inoperative, each one can operate independently. The input signals of each channel are a variable loop resistance made of the five detectors in parallel and a reference voltage. The equivalent resistance varies when a change of state occurs in the monitored areas of the engine. The reference voltage is sent to an FDU logic. This FDU logic is sent to the FIRE and FAULT logic gate. These logic gates generate the alarm outputs. The output signals are generated via discrete signals and/or the ARINC 429 bus.

After the analysis of the input signals, the FDU logic outputs determine a FIRE or a FAULT state of the circuitry. A FAULT state of the circuitry can be due to an unserviceable detector (opening of a MONITOR switch or loss of the electrical signal) or if the responder or the connectors of the FDU is contaminated. A FAULT state of the circuitry generates a LOOP A(B) INOP signal. A FIRE state of the circuitry can be due to a detection of a fire by one of the responders.

There is a FIRE warning signal if any of the following conditions are met:
- FIRE A and FIRE B,
- FIRE A and FAULT B,
- FAULT A and FIRE B,
- FAULT A and FAULT B in less than 5 seconds.

The FIRE warning signals, thus generated, are transmitted to the cockpit, at the following locations:
- ENGine/FIRE control panel: ENGine/FIRE P/BSW,
- ENGine MASTER control panel: ENGine/FIRE/FAULT annunciator,
- MASTER WARNing light
- EWD,
- SD,
- Continuous Repetitive Chime (CRC).

There is a FAULT warning signal (INOP signal) if any of the following conditions occurs:
- LOOP A(B) is faulty for more than 20 seconds while the other loop is in normal condition (because of an electrical failure, a failure in a detector or a failure in a detection circuit). The FAULT message, thus generated, is transmitted to the cockpit on the EWD,
- LOOP A and LOOP B are FAULTy, the first one more than 5 seconds before the other one.

The FAULT warning signals thus generated are transmitted to the cockpit, at the following locations:
- MASTER CAUTion light
- EWD,
- Single Chime (SC).

The FAULT message is transmitted continuously via the ARINC 429 bus to the CMC 1(2) and the FIRE and the FAULT warnings are generated via discrete signals.

The microcontroller operating software:
- monitors the two detection loops,
- isolates the failed detector and loop circuit and memorizes the failures,
- checks the fire test circuitry when it is activated,
- does the self-test at the power-up of the FDU,
- does the built-in test and transmits the test results on the ARINC 429 bus,

G7508471 - G3NT1T0 - FM26D100000006

- continuously transmits a system status message to the CMC 1(2) via the ARINC 429 bus,
- supplies a serial bus interface and commands and transmits data.

G7508471 - G3NT1T0 - FM26D1000000006

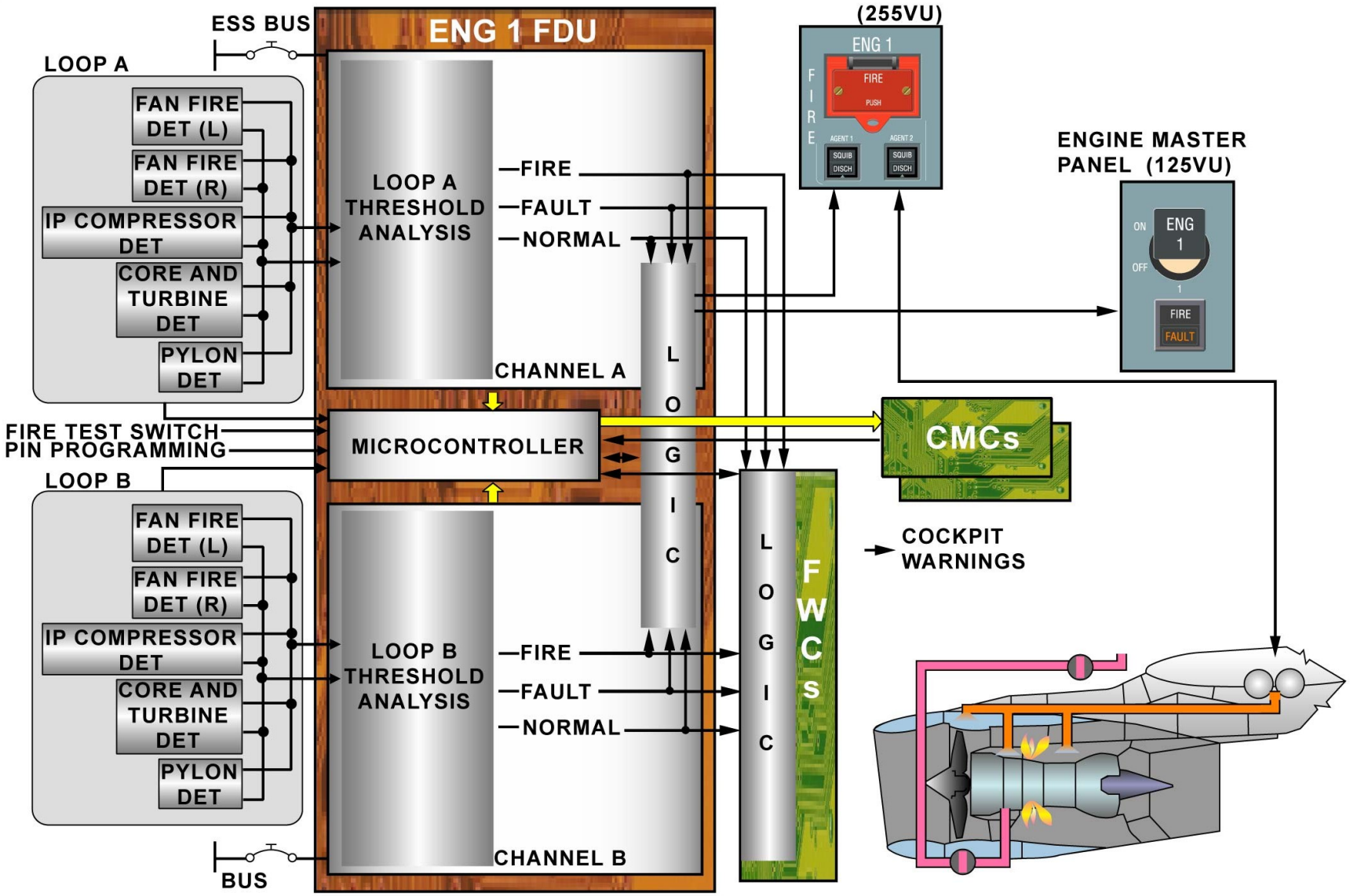

ENGINE FIRE PROTECTION DESCRIPTION - FDU (FIRE DETECTION UNIT)

G7508471 - G3NT1T0 - FM26D100000006

This Page Intentionally Left Blank

G7508471 - G3NT1T0 - FM26D1000000006

ENGINE FIRE PROTECTION D/O (3)

SYSTEM OPERATION IN CASE OF FIRE ON GROUND

When a fire is detected, the continuous repetitive chime sounds, the MASTER WARNing flashes, the ENGINE FIRE PUSHbutton light comes on and the FIRE light on the ENGINE MASTER panel comes on. When the MASTER lever is set to OFF, the LP fuel valve and the High Pressure (HP) fuel valve close and cause engine shutdown.
When the ENGINE FIRE PUSHbutton is released out, the CRC stops and the SC sounds and the MASTER CAUTion comes on due to deactivation of systems. The fuel LP valve closure is confirmed. The SQUIB lights on the AGENT P/Bs come on to indicate that the AGENT P/Bs can be used.
When the AGENT 1 P/B is pressed, fire bottle one is discharged in the engine compartment and the DISCHarge light comes on. The same action with the AGENT 2 P/B must be done.
When the fire is extinguished, the ENGINE FIRE PUSHbutton light and the MASTER WARNing light go off and the FIRE indication on the ENGINE MASTER panel goes off.

G7508471 - G3NT1T0 - FM26D1000000006

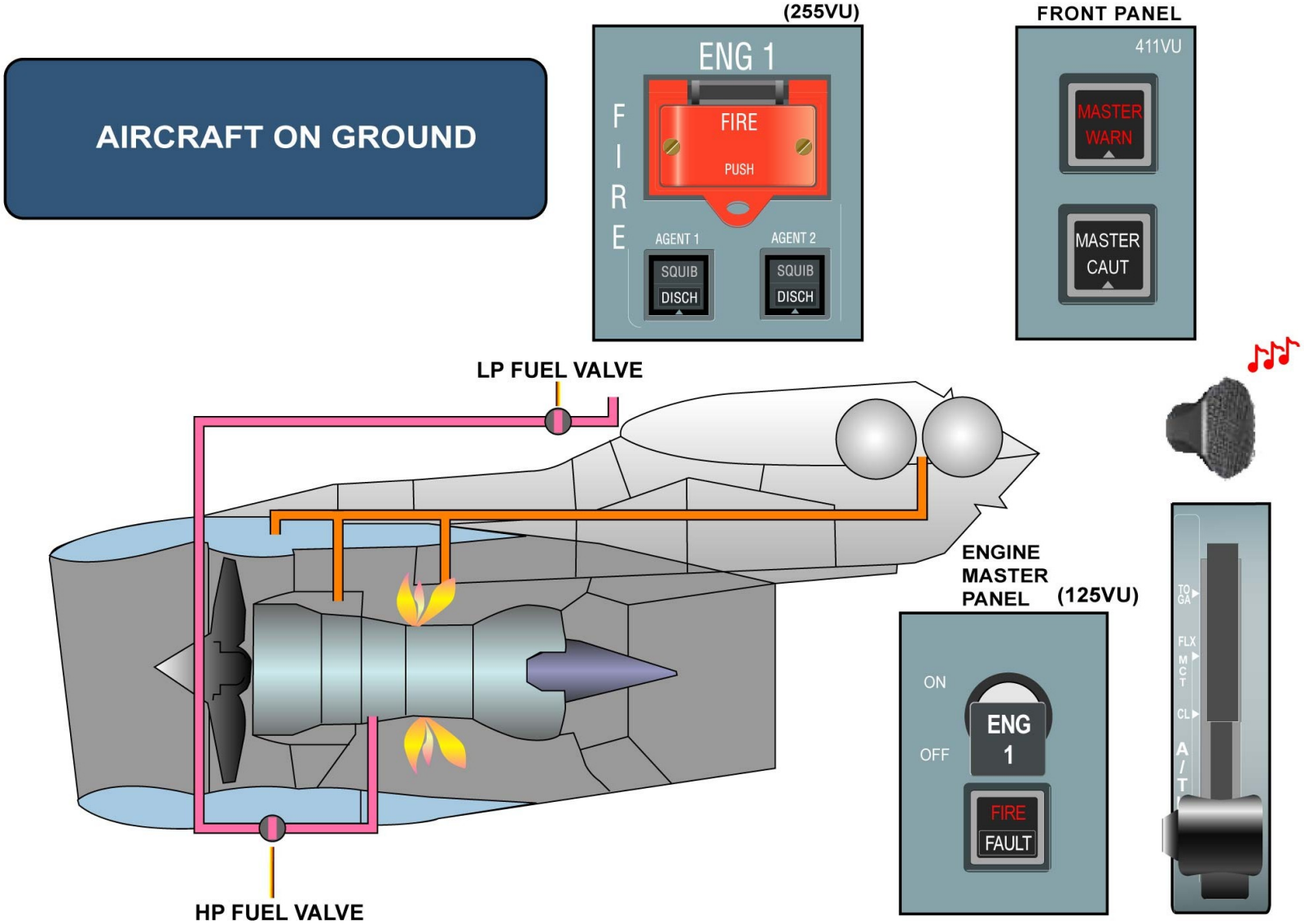

SYSTEM OPERATION IN CASE OF FIRE ON GROUND

G7508471 - G3NT1T0 - FM26D100000006

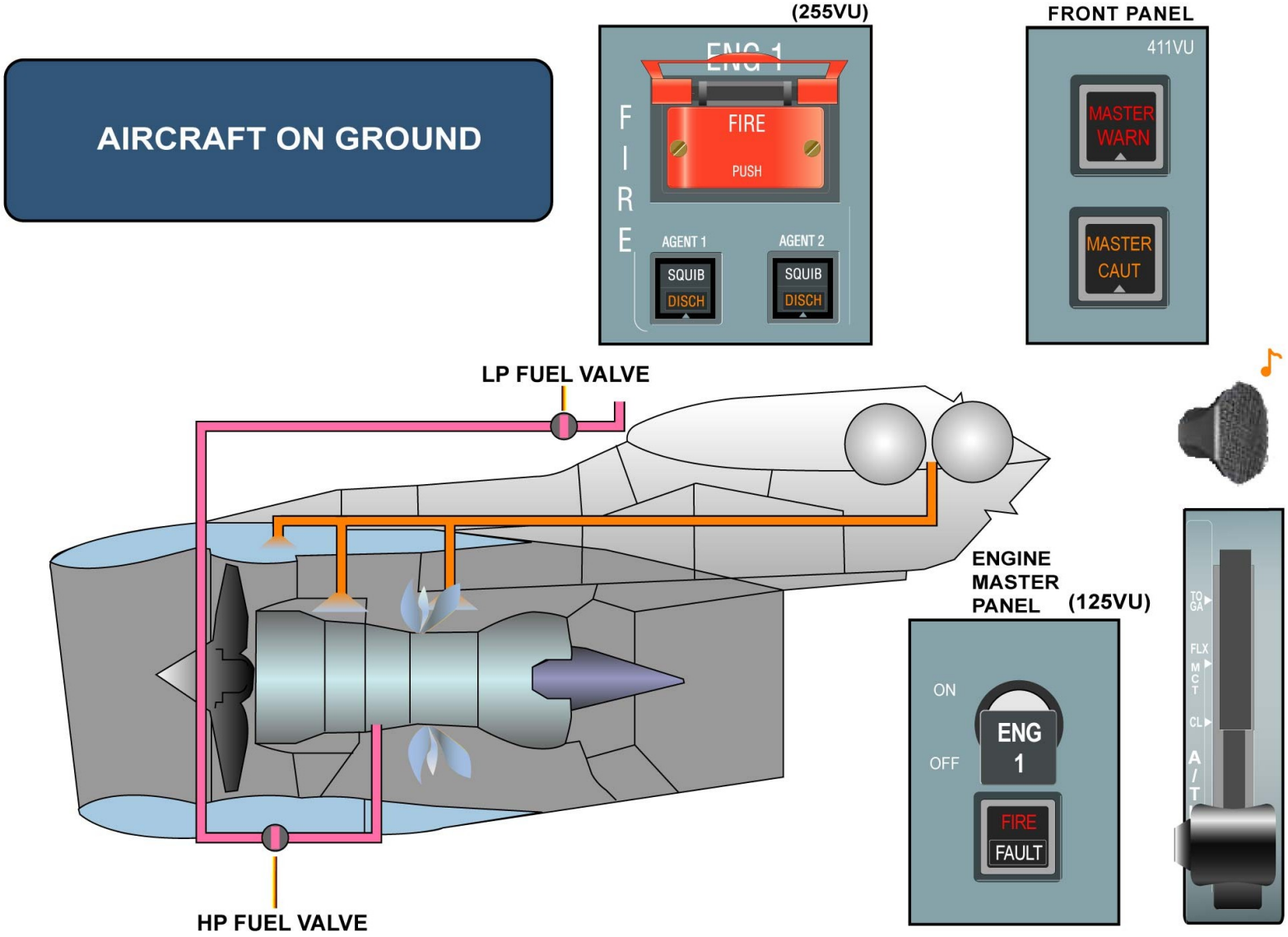

SYSTEM OPERATION IN CASE OF FIRE ON GROUND

G7508471 - G3NT1T0 - FM26D100000006

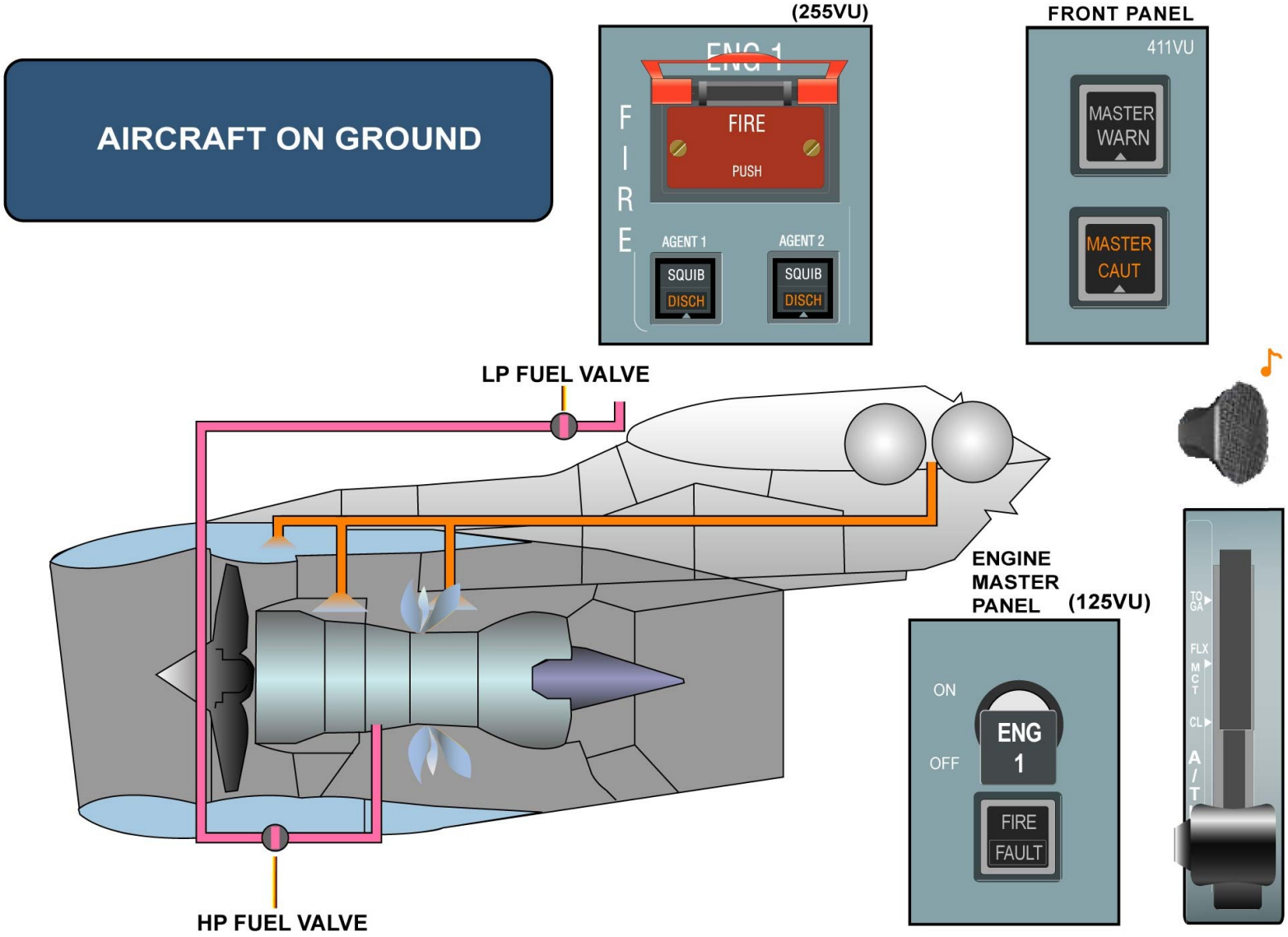

SYSTEM OPERATION IN CASE OF FIRE ON GROUND

G7508471 - G3NT1T0 - FM26D100000006

ENGINE FIRE PROTECTION D/O (3)

SYSTEM OPERATION IN CASE OF FIRE IN FLIGHT

When a fire is detected, the CRC sounds, the MASTER WARNing flashes, the ENGINE FIRE PUSHbutton light comes on, and the FIRE light on the ENGINE MASTER panel comes on.
When the ENGINE 1 MASTER lever is set to OFF, the fuel LP and HP valves close and cause engine shutdown.
When the ENGINE FIRE PUSHbutton is released out, the CRC stops, the single chime sounds and the MASTER CAUTion light comes on due to deactivation of systems.
The fuel LP valve closure is confirmed and the SQUIB lights on the AGENT P/Bs come on to indicate that the AGENT P/Bs can be used.
Wait for ten seconds: this is required to reach engine windmilling, reducing the nacelle ventilation which increases the agent effect.
When the AGENT 1 P/B is pressed, the fire bottle 1 is discharged in the engine compartment and the DISCH light comes on. If the fire still persists after 30 seconds, the second bottle must be discharged. When the fire is extinguished the ENGINE FIRE PUSHbutton light, the MASTER WARNing and the FIRE indication on the ENGINE MASTER panel go off.

G7508471 - G3NT1T0 - FM26D1000000006

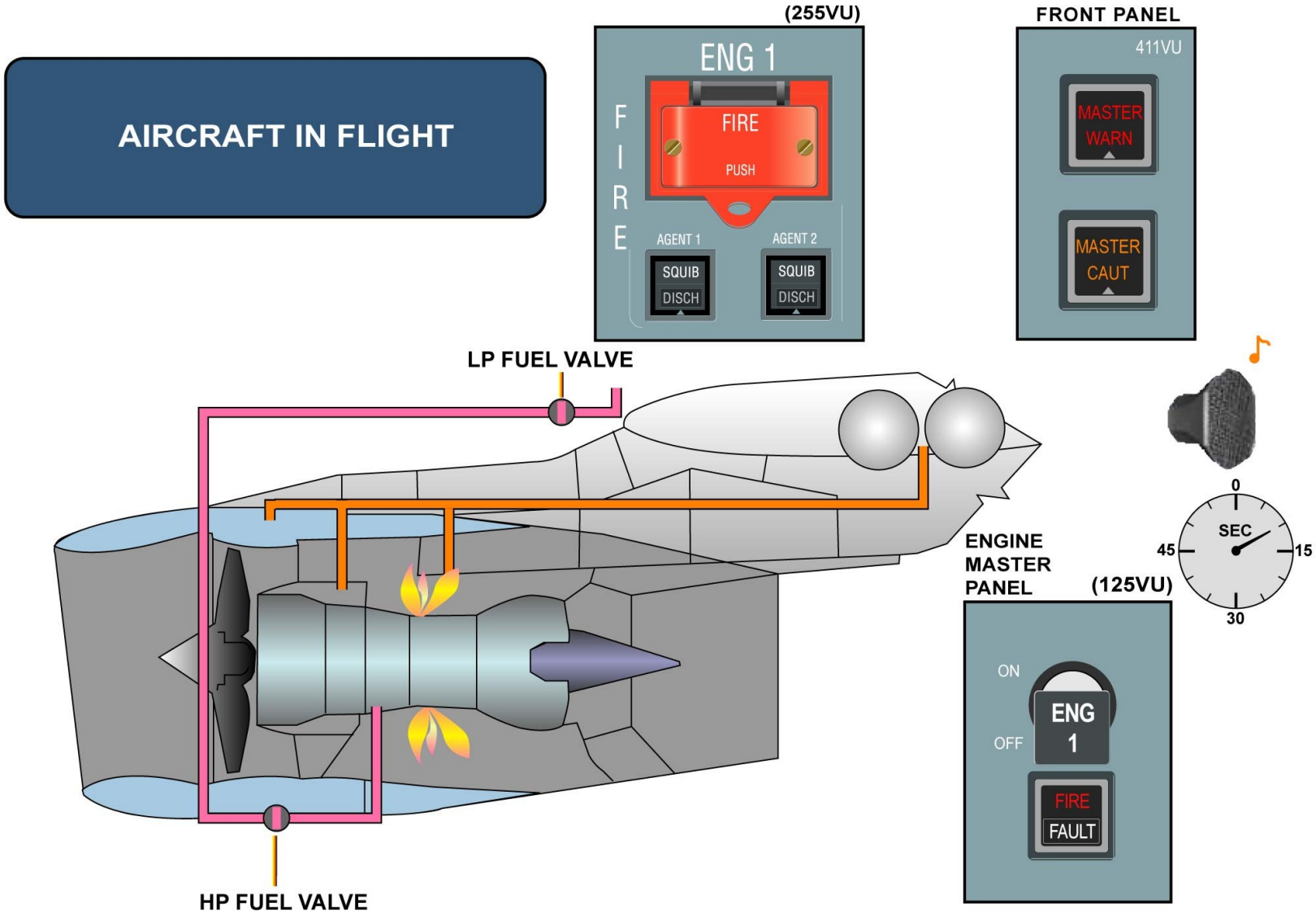

SYSTEM OPERATION IN CASE OF FIRE IN FLIGHT

G7508471 - G3NT1T0 - FM26D100000006

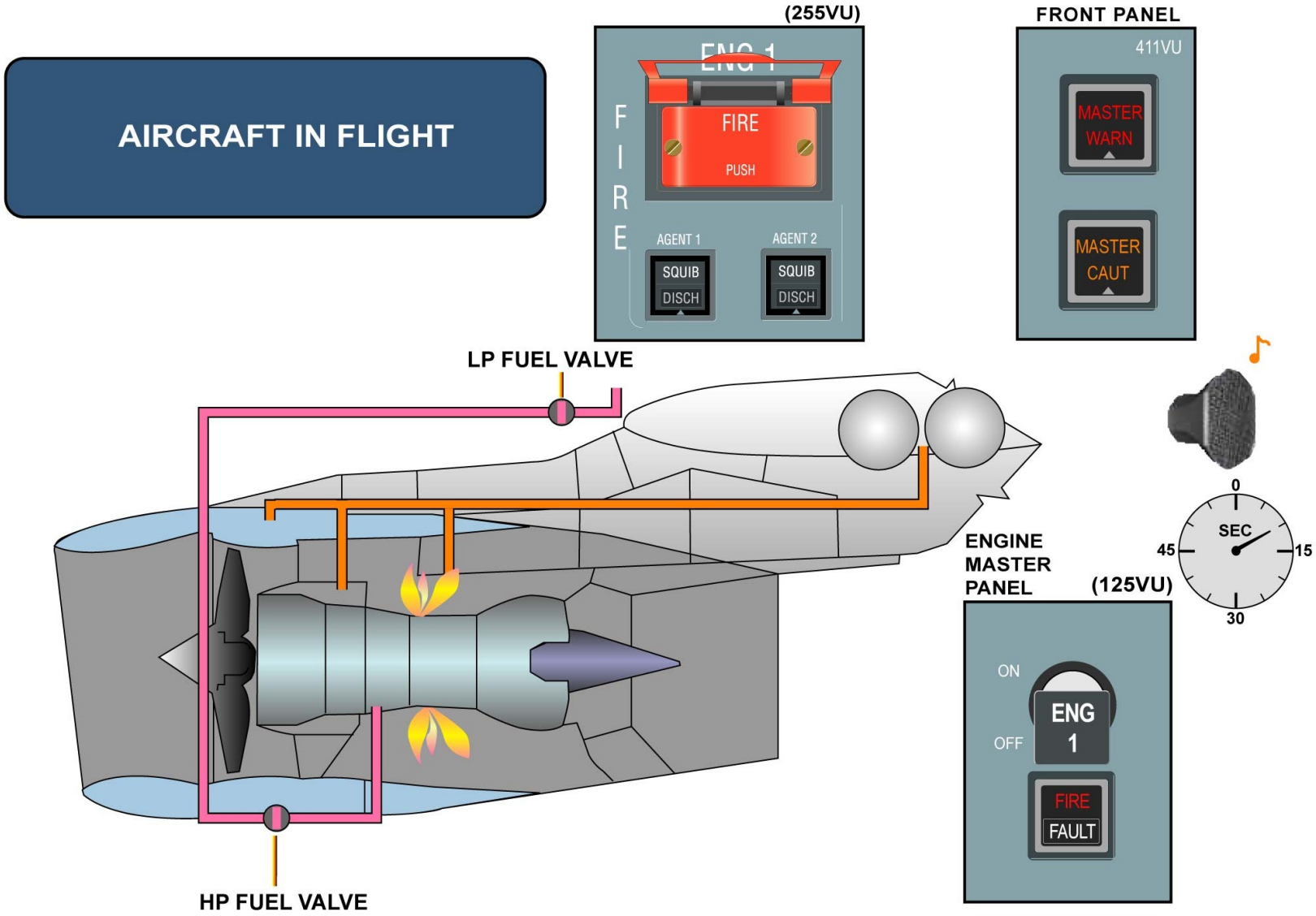

SYSTEM OPERATION IN CASE OF FIRE IN FLIGHT

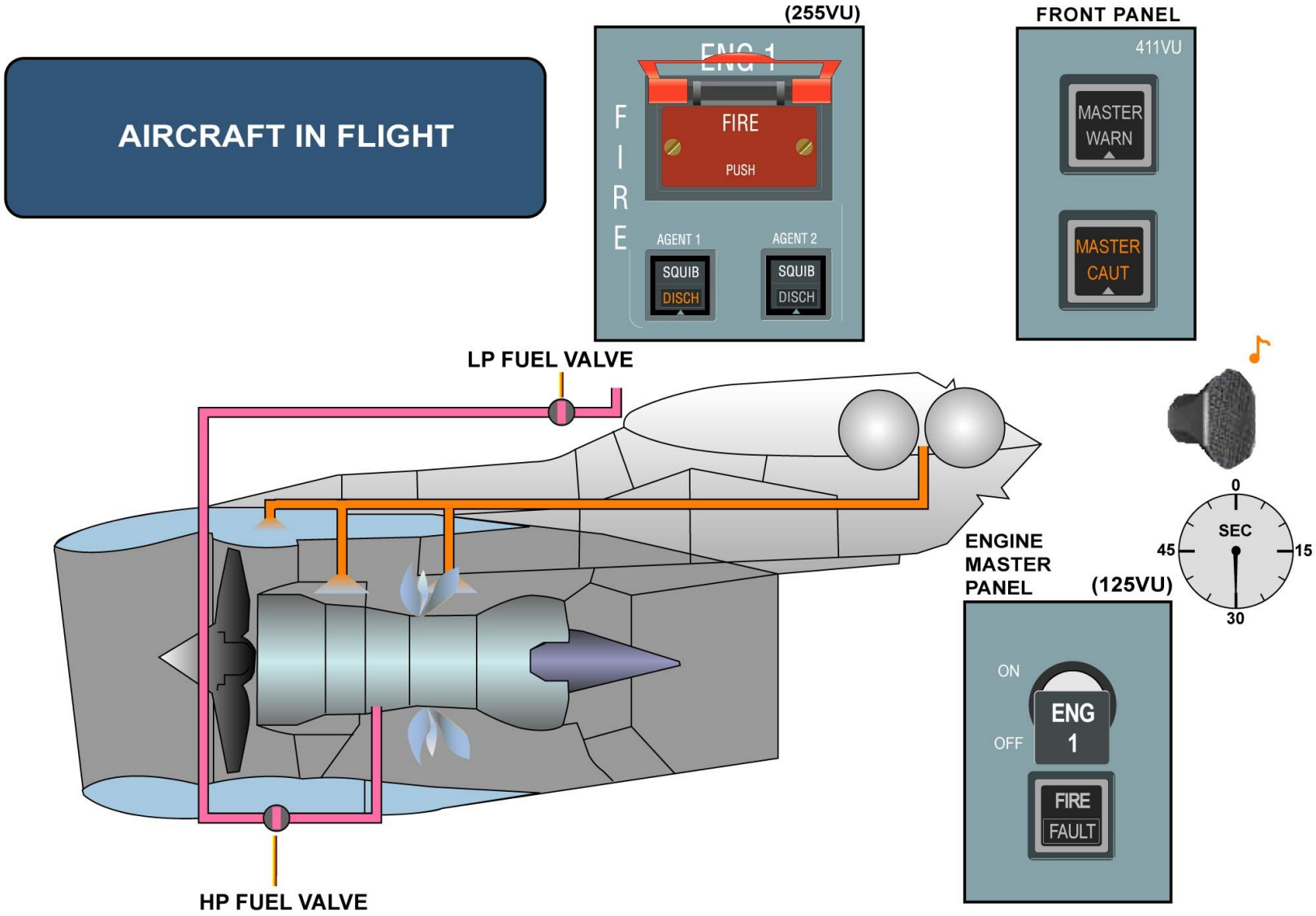

SYSTEM OPERATION IN CASE OF FIRE IN FLIGHT

APU FIRE PROTECTION D/O (3)

SYSTEM OPERATION IN CASE OF APU FIRE

This topic identifies the APU fire warnings and describes the subsystems of the fire extinguishing procedure in flight and on ground.

ON GROUND

The A/C is on ground and the APU is running. When a fire is detected, the Continuous Repetitive Chime (CRC) sounds, the MASTER WARNing flashes and the APU FIRE P/B light comes on, on the APU FIRE panel. The APU FIRE light on the external power panel comes on and the external horn sounds.
The Automatic Fire Extinguishing Control Unit (AFECU) starts the extinguishing sequence. The Electronic Control Box (ECB) receives a signal and activates an APU shutdown. The fuel solenoid valve and the fuel LP shut-off valve close and the APU shuts down. The CRC stops. The Single Chime (SC) sounds, the MASTER CAUTion and the FAULT light on the APU MASTER SWitch P/B come on.
The cartridge of the extinguisher is activated. The APU fire bottle is discharged automatically and the DISCHarge light on the AGENT P/B comes on.
When the fire is extinguished, the MASTER WARN, the APU FIRE P/B light on the APU FIRE panel and the APU FIRE light on the external power panel go off.

NOTE: Note that it is not necessary to use the APU SHUT OFF switch on the external power panel in case of an APU fire auto extinguishing.

IN FLIGHT

The APU is running in flight. When a fire is detected the CRC sounds, the MASTER WARN flashes and the APU FIRE P/B light on the APU FIRE panel comes on. The APU FIRE P/B can be used. When the APU FIRE P/B is released out, the CRC stops, the fuel solenoid valve and the fuel LP shut-off valve close and cause an APU shutdown. The SC sounds, the MASTER CAUT and the FAULT light on the APU MASTER SW P/B come on. The SQUIB light comes on to indicate that the AGENT P/B can be used.
A ten-second delay allows the airflow to reduce. This increases the agent effect. When the AGENT P/B is pressed, the fire bottle is discharged in the APU compartment and the DISCH light comes on. When the fire is extinguished, the MASTER WARN and the APU FIRE P/B lights go off. The APU MASTER SW P/B can be used. When the APU MASTER SW P/B is released out, the FAULT light goes off.

CAUTION: Do not attempt to restart the APU.

G7508471 - G3NT1T0 - FM26D200000002

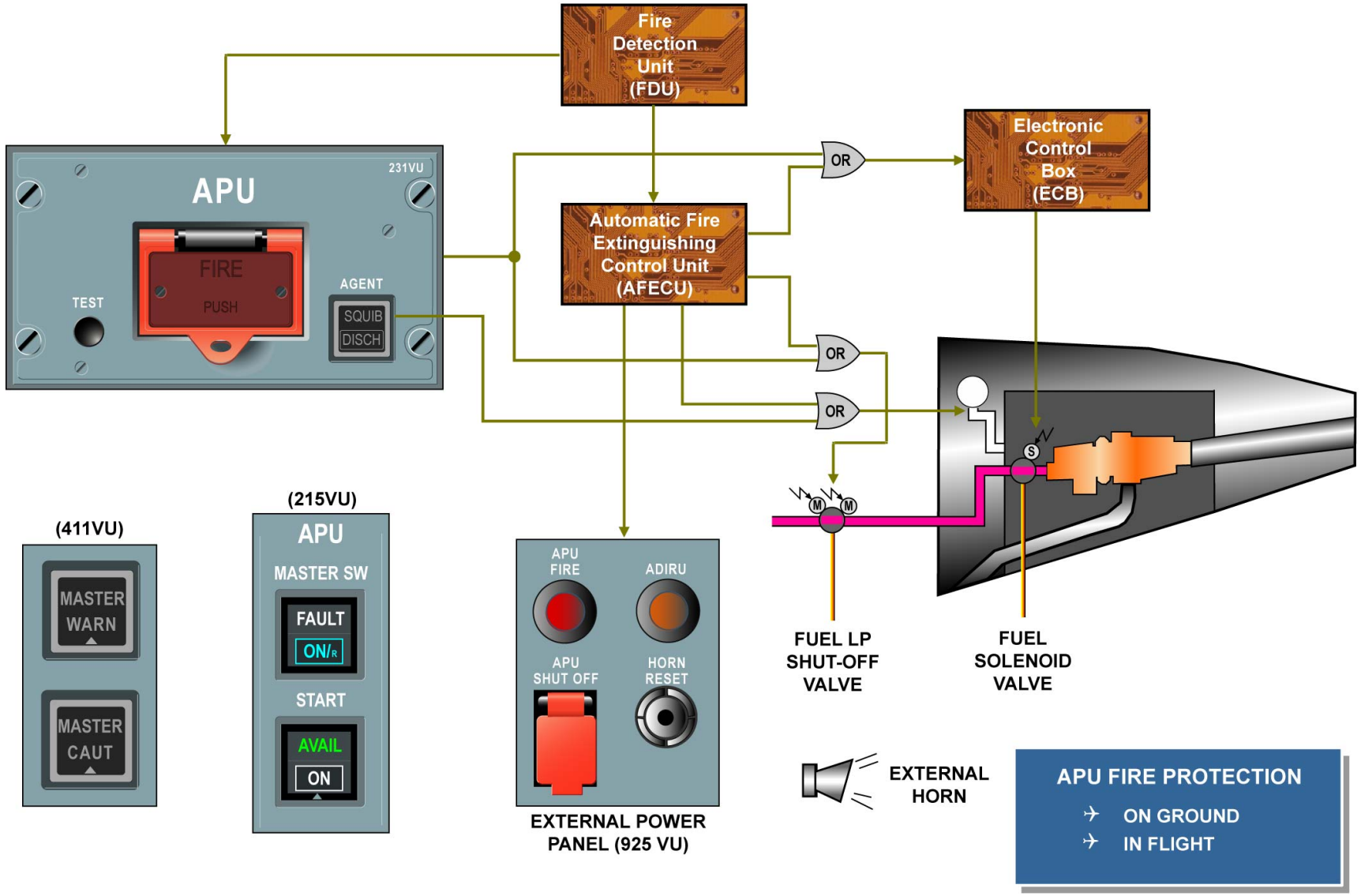

SYSTEM OPERATION IN CASE OF APU FIRE - ON GROUND & IN FLIGHT

G7508471 - G3NT1T0 - FM26D200000002

APU FIRE PROTECTION D/O (3)

SYSTEM INTERFACES

This topic identifies and describes the interfaces on the APU FDU and the AFECU.

GENERAL

The FDU is designed as dual channel equipment.

FDU DISCRETE INPUTS

The FDU receives a flight/ground signal discrete input. This input comes from Landing Gear Control and Interface Units (LGCIUs) 1 and 2 and is used for testing by the Central Maintenance Computer (CMC). The FDU receives two types of discrete inputs from the fire extinguishing bottle. These inputs are used for:
- monitoring the pressure of the fire bottle (pressure switch),
- monitoring the squib of the fire bottle (squibs A and B).

The FDU receives a discrete signal (in each channel) from the TEST P/B on the APU FIRE panel that is used to test the fire protection system. The FDU receives a discrete signal from the APU FIRE P/B. This signal is used when the APU FIRE P/B is released out for illumination of the SQUIB light on the AGENT P/B. The FDU receives a discrete signal from the pin-programming. It is used to identify the FDU (engines or APU). The FDU receives a discrete signal from the CMCs for the maintenance test (BITE test).

AFECU DISCRETE INPUTS

The AFECU receives two types of discrete inputs from the fire extinguishing bottle. These inputs are used for:
- monitoring the pressure of the fire bottle (pressure switch),
- monitoring the squib of the fire bottle (squibs A and B).

The AFECU receives the signal FIRE A and FIRE B from the FDU. These signals are used to activate the automatic fire extinguishing sequence on ground. The AFECU receives a discrete signal from the TEST P/B on the APU FIRE panel to inhibit an AFECU test (BITE test). The AFECU receives a flight/ground signal discrete input. This input comes from LGCIU 1 and is used for activation of the extinguishing sequence. The AFECU receives a signal from the RESET P/B and is used to reset the AFECU after an APU fire. The AFECU receives a discrete signal from the APU FIRE P/B or the APU SHUT OFF P/B or the APU EMERG SHUT DOWN P/B used to cancel the external horn. The AFECU receives a discrete signal from the CMCs for the maintenance test (BITE test).

ANALOG INPUTS

The FDU receives analog inputs from the detectors of the APU (loops A and B). Each channel receives and continuously analyzes the two signals from the detection loop (fire or fault).

FDU DISCRETE OUTPUTS

The FDU sends discrete outputs to the:
- DISCH lamp of the AGENT P/B,
- SQUIB lamp of the AGENT P/B.

The FDU channels A and B discrete outputs (FIRE A and FIRE B) are sent to:
- the APU FIRE P/B on the overhead panel,
- the FWCs,
- the LOOP A FAULT signal is sent by channel A to the FWCs.
- the LOOP B FAULT signal is sent by channel B to the FWCs.

AFECU DISCRETE OUTPUTS

The AFECU sends discrete outputs to:
- the APU FIRE light on the external power control panel,
- the external horn,
- the fuel fire shut-off valve,
- the CMCs.

G7508471 - G3NT1T0 - FM26D200000002

DIGITAL OUTPUTS

The FDU sends digital outputs via an ARINC 429 bus to the CMCs for maintenance purposes.

G7508471 - G3NT1T0 - FM26D200000002

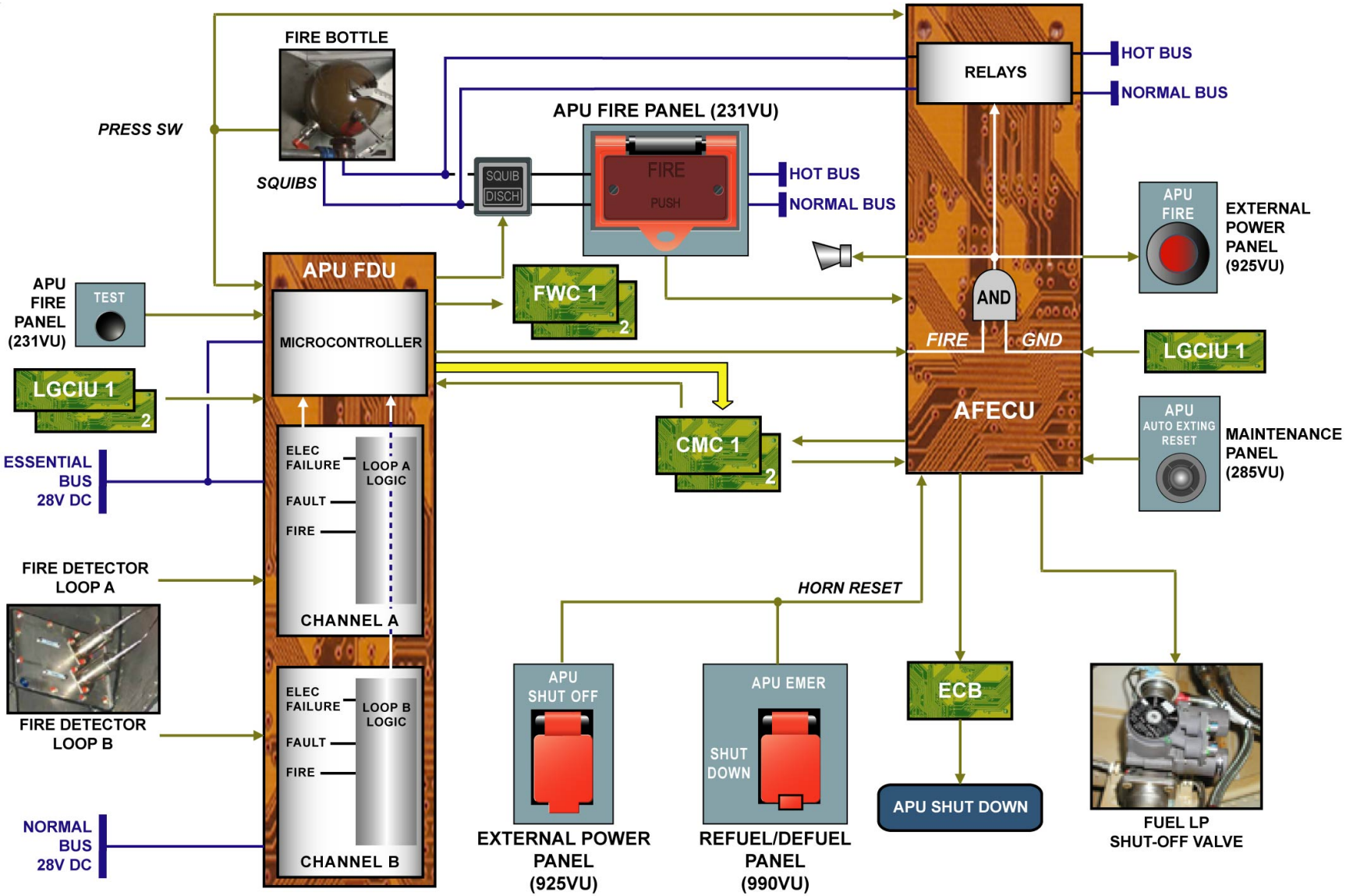

SYSTEM INTERFACES - GENERAL ... DIGITAL OUTPUTS

G7508471 - G3NT1T0 - FM26D200000002

This Page Intentionally Left Blank

G7508471 - G3NT1T0 - FM26D200000002

CABIN & LAVATORIES FIRE PROTECTION D/O (3)

DESCRIPTION

Lavatory smoke detection is provided by ambient smoke detectors installed in each lavatory ceiling in the air outlet cavity. Video Control Center (VCC) smoke detection is provided by 2 smoke detectors installed on the air extraction duct above the L1 Passenger/Crew door 1. Flight Crew Rest Compartment (FCRC) smoke detection is provided by 1 ambient smoke detector. The In-Flight Entertainment Center (IFEC) smoke detection is provided by 2 smoke detectors installed on the IFEC air extraction duct. Lower Deck-Mobile Crew Rest (LD-MCR) smoke detection is provided by 4, 5 or 6 smoke detectors, depending on the LD-MCR type. These smoke detectors are connected to the Crew Rest Smoke Detection control unit (CRSD). A staircase housing smoke detection is also provided by 1 ambient smoke detector. The smoke detectors are connected to the Smoke Detection Control Unit (SDCU) which continuously monitors their condition. The monitoring of the LD-MCR some detectors is ensured by the CRSD which transmits smoke alarm signal to the SDCU. The SDCU generates SMOKE warnings or, in case of detector failure, generates FAULT warnings. A fire extinguisher bottle is installed in each lavatory. Portable fire extinguishers are installed in the cockpit and the cabin.

G7508471 - G3NT1T0 - FM26D400000002

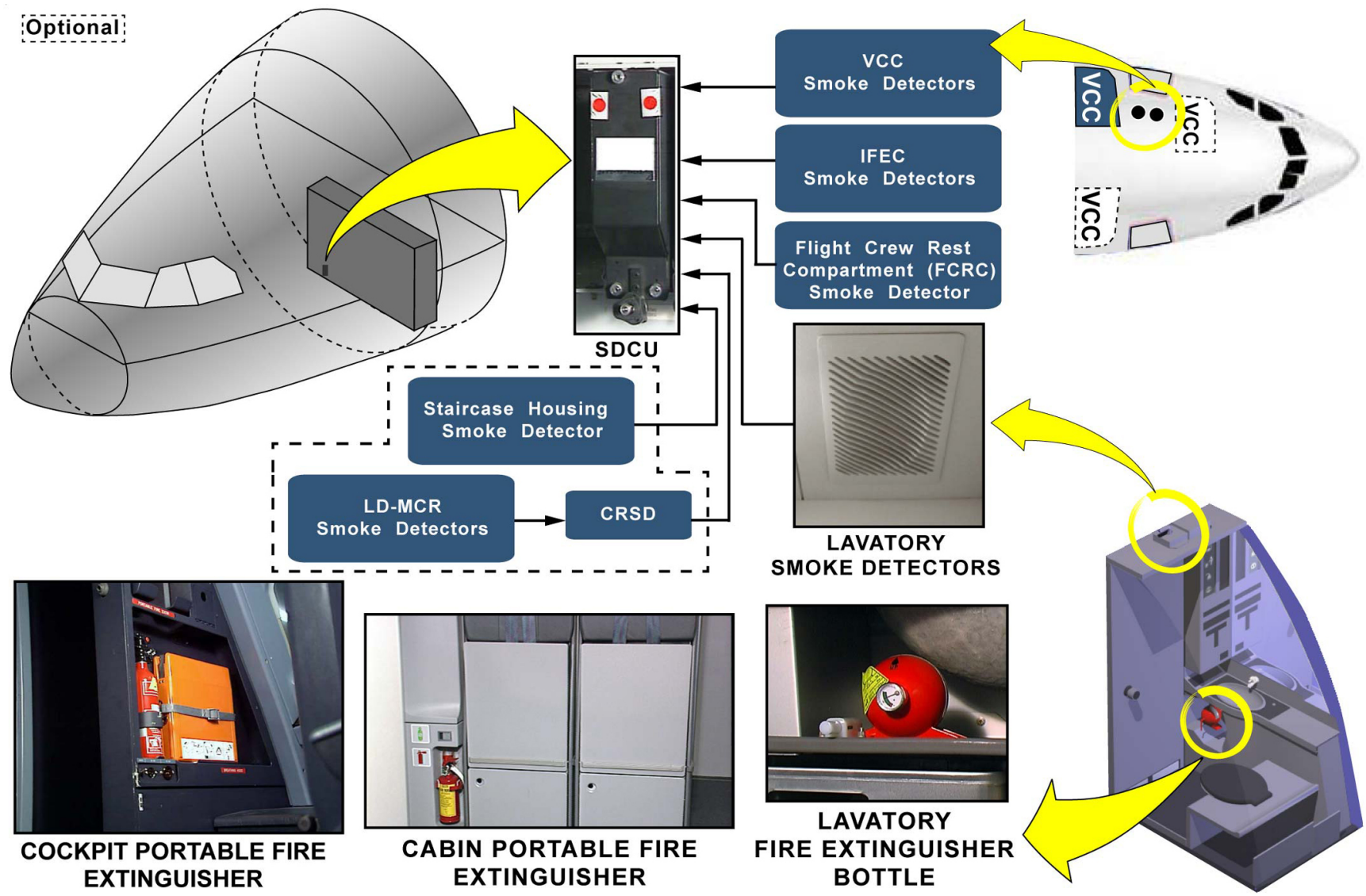

DESCRIPTION

CABIN & LAVATORIES FIRE PROTECTION D/O (3)

DESCRIPTION (continued)

SDCU

The SDCU monitors and processes the smoke detector signals for the avionics compartment, lower deck cargo compartments (FWD, AFT, BULK), VCC, IFEC, lavatories and auxiliary areas (i.e. FCRC, LD-MCR Staircase Housing, ...) smoke detection systems.
The SDCU has two independent channels for redundancy. It can operate with only one channel operative without any system degradation or function loss.
Each channel has:
- a power supply of 28 V DC and a control circuit to supply the SDCU components and the smoke detectors. The ESSential Bus supplies channel 1 and the NORMAL BUS supplies channel 2,
- a microprocessor,
- devices to monitor, send and retrieve data from the other channel,
- bus interfaces to the smoke detectors,
- discrete inputs and outputs that have interfaces with the cockpit and subsystem components,
- a pin-programming function to give the applicable aircraft configuration,
- BITE hardware and software,
- discrete inputs for channel reset from the reset panels 261 VU and 262 VU.

When the SDCU receives a smoke signal from the smoke detector(s), it supplies the corresponding smoke warning signal to:
- the Flight Warning Computer (FWC) which generates warnings and indications in the cockpit,
- the Cabin Intercommunication Data System (CIDS) which generates warnings and indications in the cabin.

When the SDCU receives a FAULT signal from the smoke detector(s), it supplies a FAULT signal to:
- the Flight Warning Computer (FWC),
- the Centralized Maintenance Computer (CMC),
- the Cabin Intercommunication Data System (CIDS), in order to show the location of the defective smoke detector on the Flight Attendant Panel (FAP).

NOTE: Note that for lavatory fire extinguishing, a cabin portable fire extinguisher must be used.

G7508471 - G3NT1T0 - FM26D400000002

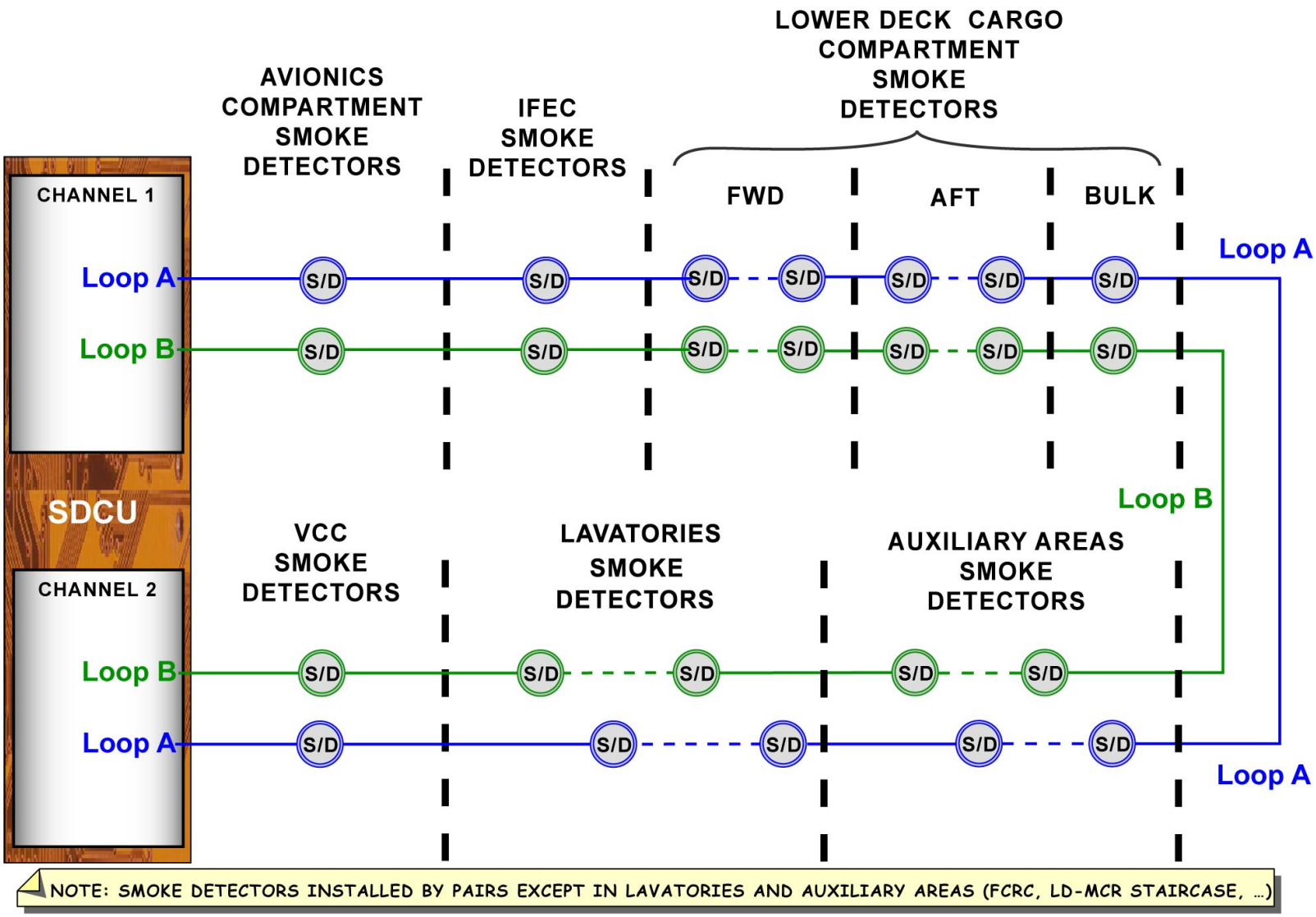

DESCRIPTION - SDCU

G7508471 - G3NT1T0 - FM26D400000002

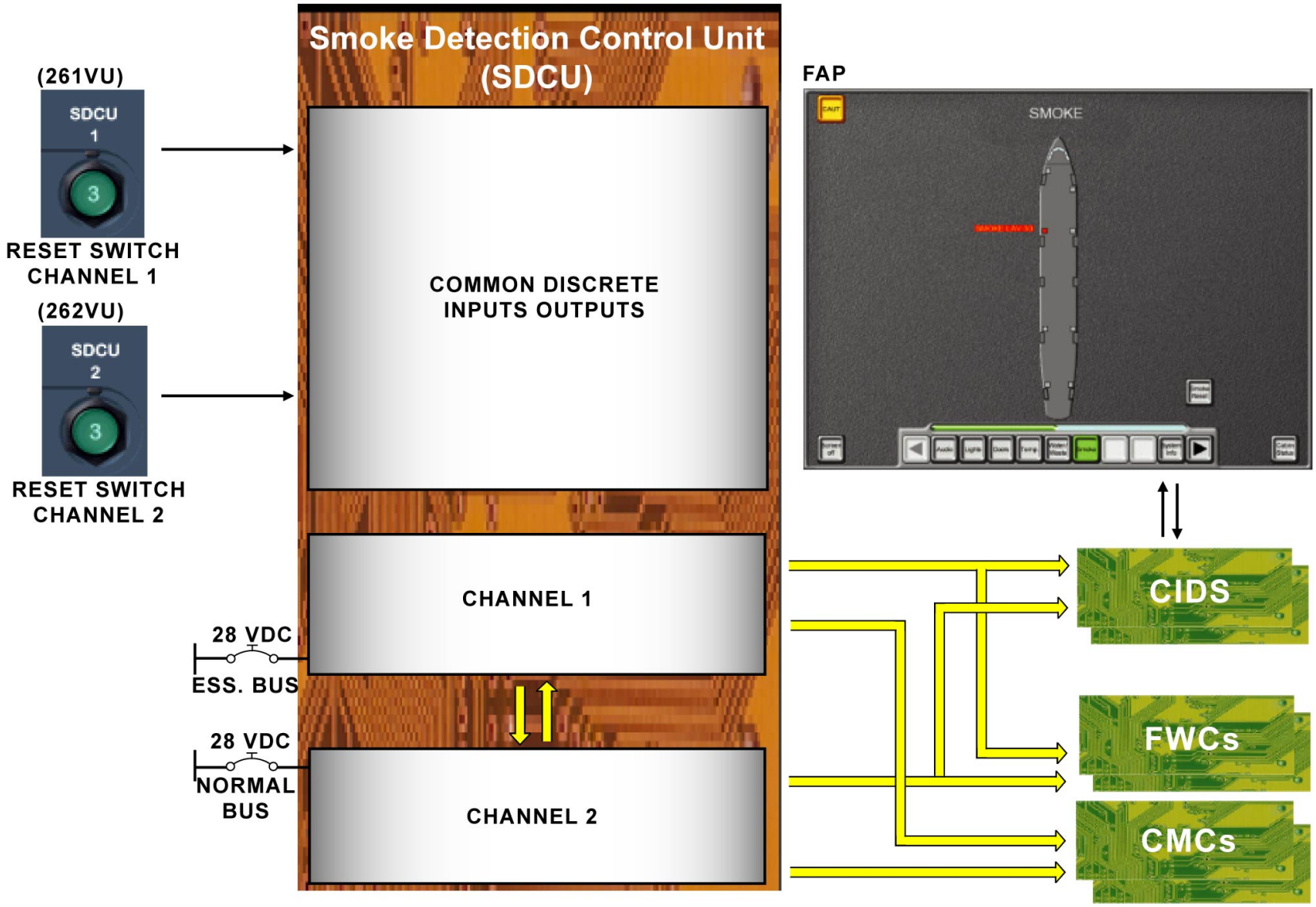

DESCRIPTION - SDCU

G7508471 - G3NT1T0 - FM26D400000002

This Page Intentionally Left Blank

G7508471 - G3NT1T0 - FM26D400000002

CABIN & LAVATORIES FIRE PROTECTION D/O (3)

DESCRIPTION (continued)

DETECTOR

The smoke detectors are photo-electric smoke detector cells based on the scattered light principle.
Each detector includes:
- a light source which is an infra red emitting diode,
- a labyrinth and a light stop,
- a photocell light receiver.

In normal condition, the photocell cannot receive any light from the light source because of the light stop. However when smoke particles enter into the detector, part of the light beam is reflected and scattered to reach the photocell.
When the photocell receives this light, it sends an analog signal to the SDCU.

G7508471 - G3NT1T0 - FM26D400000002

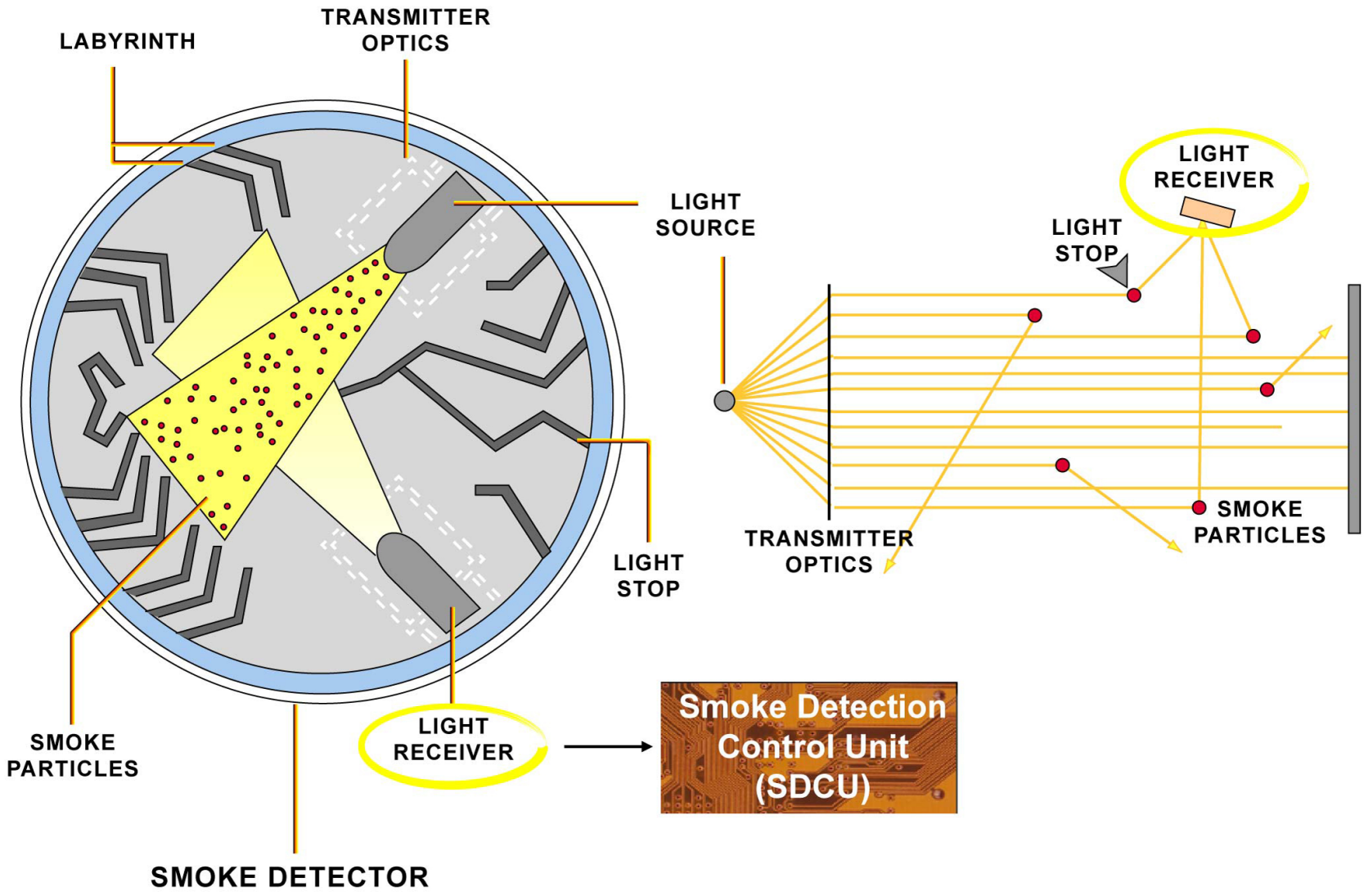

DESCRIPTION - DETECTOR

CABIN & LAVATORIES FIRE PROTECTION D/O (3)

DESCRIPTION (continued)

LAVATORY FIRE EXTINGUISHER BOTTLE

One lavatory fire extinguisher is installed in the waste-bin of each lavatory.
Each fire extinguisher has:
- a discharge tube with a fusible plug which melts and lets the agent flow into the waste-bin should a fire occur,
- a pressure gauge installed on the fill port to show if the container is full or empty after extinguishing.

The lavatory fire extinguisher operates independently of other systems. It provides automatic extinguishing, when the temperature in the waste-bin increases to approximately 77º C (170.60º F). This temperature melts the fusible plug, which causes the agent to flow into the waste-bin. The fire bottle pressure check consists in checking that the needle is in the green range on the pressure gauge.

G7508471 - G3NT1T0 - FM26D400000002

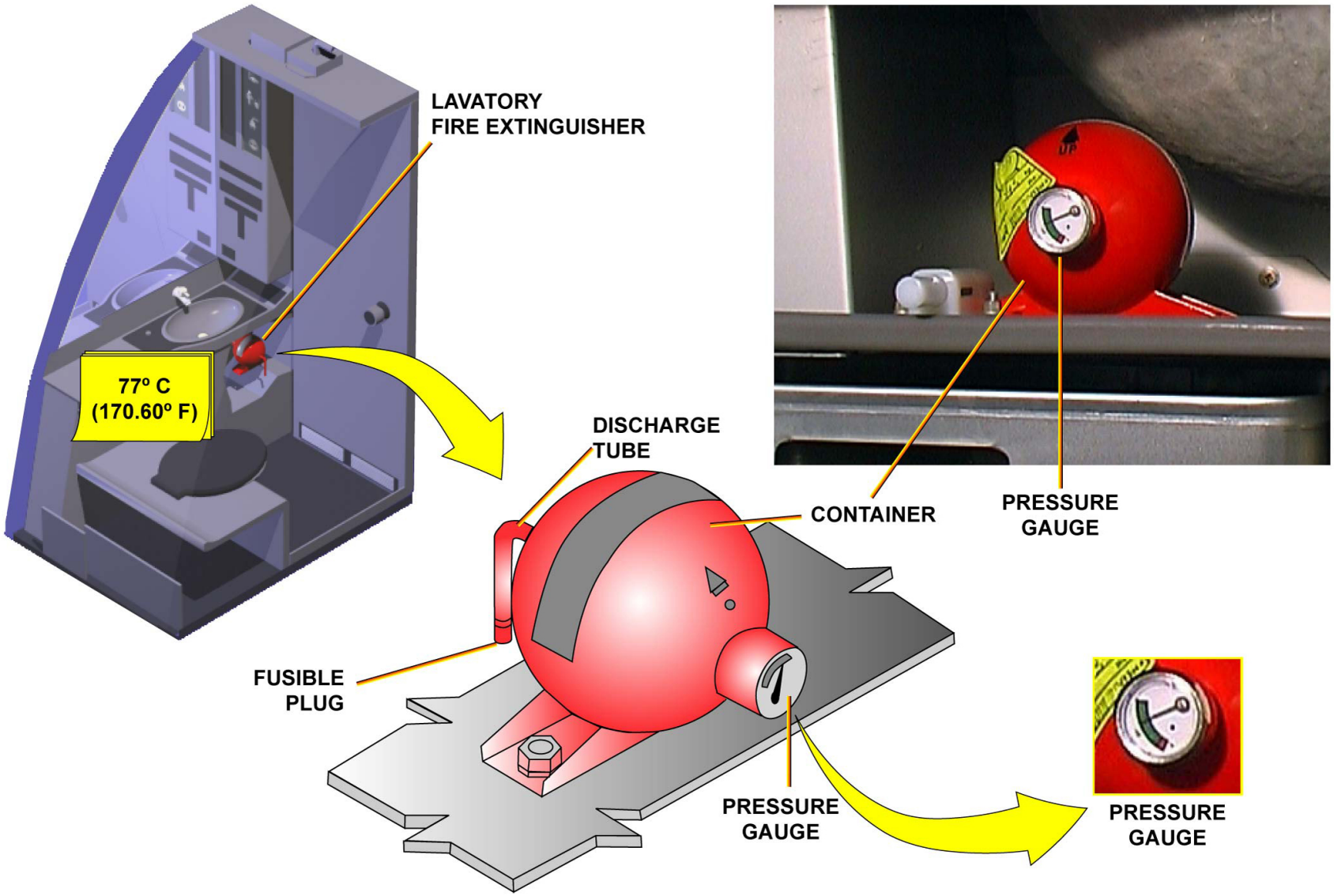

DESCRIPTION - LAVATORY FIRE EXTINGUISHER BOTTLE

G7508471 - G3NT1T0 - FM26D400000002

CABIN & LAVATORIES FIRE PROTECTION D/O (3)

NORMAL OPERATION

When smoke is detected, the SDCU generates a smoke warning signal to the FWC and to the CIDS.
In the cockpit, when lavatory smoke is detected, the continuous repetitive chime sounds, the MASTER WARNing flashes, and a LAVATORY SMOKE warning message is displayed on the EWD.
In the cabin:
- on the FAP or on the related Additional Attendant Panels (AAP), the SMOKE LAVatory legend comes on and stays on as long as the detection is present,
- on the Area Call Panels (ACP), the amber light flashes,
- at each cabin attendant station loudspeaker, the chime is heard,
- on all Attendant Indication Panels (AIP), the SMOKE LAVatory indications and the red LED come on.

G7508471 - G3NT1T0 - FM26D400000002

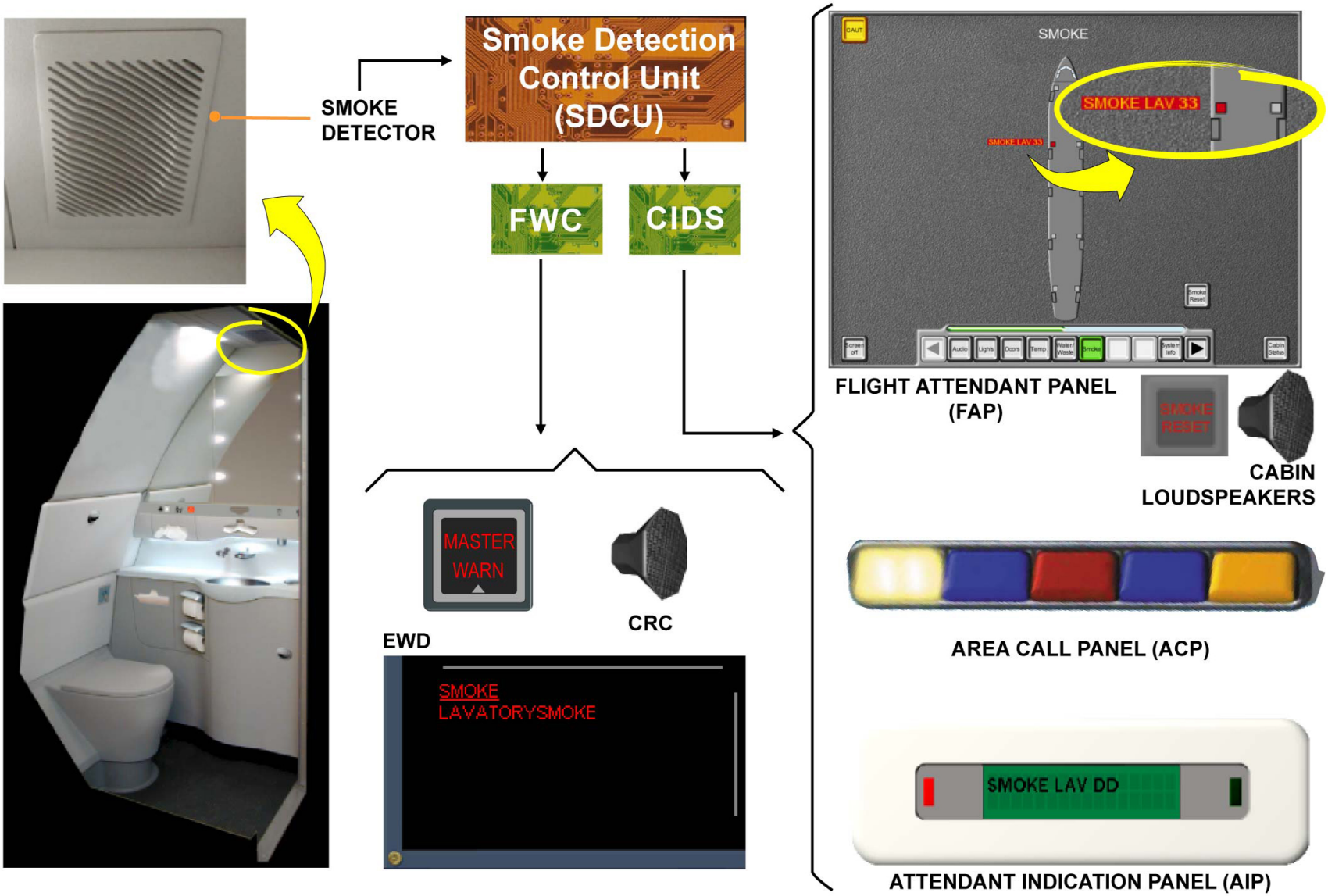

NORMAL OPERATION

G7508471 - G3NT1T0 - FM26D400000002

CARGO FIRE PROTECTION D/O (3)

CARGO FIRE PROTECTION DESCRIPTION

The cargo fire protection is done by:
- the Smoke Detection Control Unit (SDCU),
- the smoke detectors,
- the fire extinguisher bottles.

SDCU DESCRIPTION

The SDCU monitors and processes the smoke detector signals for the avionics compartment, the Lower Deck Cargo Compartment (LDCC), lavatory and auxiliary area smoke detection systems. The SDCU is installed in the avionics compartment. It has two independent channels for redundancy. It can operate on one channel only without system degradation or function loss. Each channel has:
- a power supply of 28V DC and a control circuit to supply the SDCU components and the smoke detectors (the ESSential Bus for the channel 1 and the NORMAL BUS for the channel 2.)
- A microprocessor,
- devices to monitor, send and retrieve data from the other channel,
- bus interfaces with the smoke detectors,
- a pin-programming function to give the applicable A/C configuration,
- BITE hardware and software,
- common discrete inputs and outputs that have interfaces with the cockpit and subsystem components.

For the LDCC, the SDCU supplies the smoke detectors with a controlled voltage through a two-wire safety-bus system and receives, in normal conditions, the smoke signals from all pairs of detectors. The signal is a variable voltage which indicates the normal, smoke or fault condition. When the SDCU receives a warning signal from only one detector, it does a test of the associated second detector:
- If the associated detector operates correctly the smoke signal from the first detector is ignored.
- If the associated detector does not function correctly the SDCU sends the smoke signal to the A/C warning system.

The SDCU:
- continuously monitors the pressure of the fire extinguisher bottles 1 and 2,
- transfers the discharge signal of the fire extinguisher bottles to the CARGO SMOKE control panel in the cockpit,
- receives the agent release signals from bottle 2 Flow Metering System (FMS) pressure switch.

G7508471 - G3NT1T0 - FM26D500000003

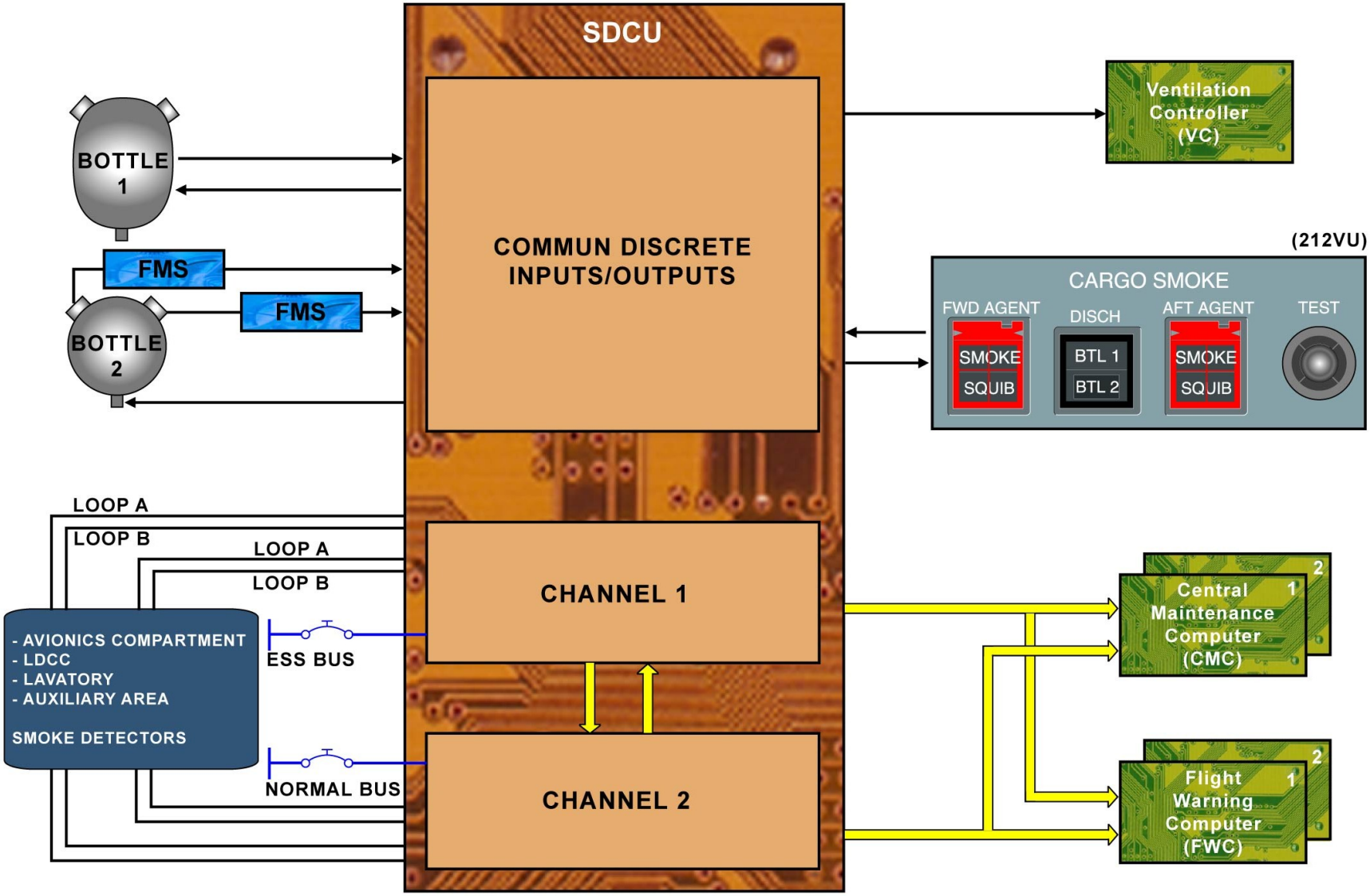

CARGO FIRE PROTECTION DESCRIPTION - SDCU DESCRIPTION

G7508471 - G3NT1T0 - FM26D500000003

CARGO FIRE PROTECTION D/O (3)

CARGO FIRE PROTECTION DESCRIPTION (continued)

DETECTOR DESCRIPTION

The smoke detectors are photo-electric smoke detector cells based on the principle of reverse scattered light. Each detector includes a light source, a labyrinth and a photocell arranged in a horizontal plane so that the photocell cannot receive light. But when there is smoke, the smoke particles reflect and diffuse part of the light beam. The photocell receives this light and sends an analog signal to the SDCU.
The smoke detector has two chambers:
- the reference chamber,
- the measurement chamber.

The reference chamber manages the differential pressure and the temperature differences and makes sure that the detectors operate on ground and in flight with the same level of sensitivity. The measurement chamber compares the analog voltage of the sensor with the different levels of the threshold (fault, normal and smoke).
The smoke detector is equipped with a built in heating device to decrease the relative humidity by increasing the temperature inside the smoke detector. The presence of water vapor condensation and haze within an optical chamber has the similar effect as smoke on the measurement chamber. By heating the smoke detector this device minimizes the possibility of false smoke warning.

G7508471 - G3NT1T0 - FM26D500000003

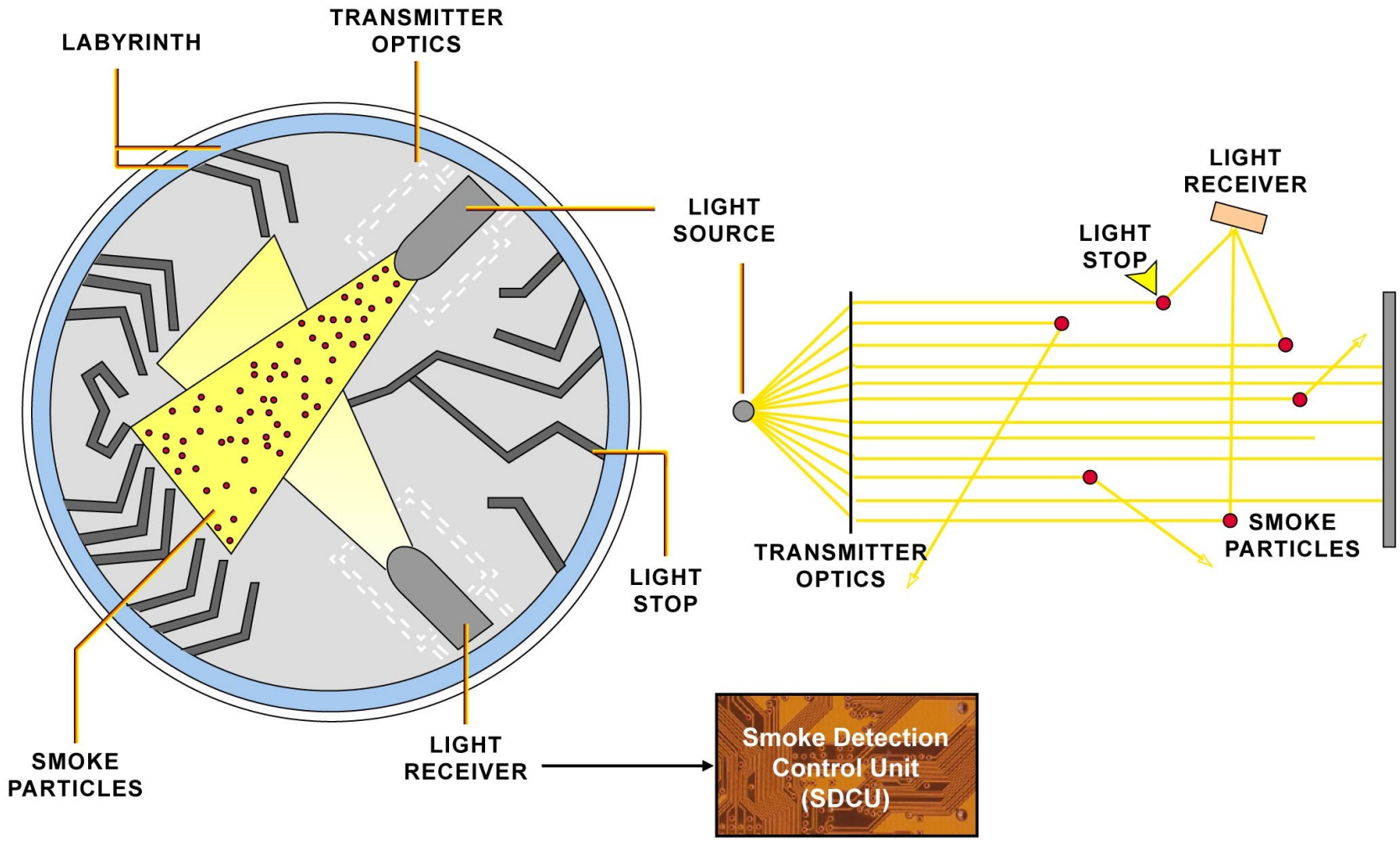

CARGO FIRE PROTECTION DESCRIPTION - DETECTOR DESCRIPTION

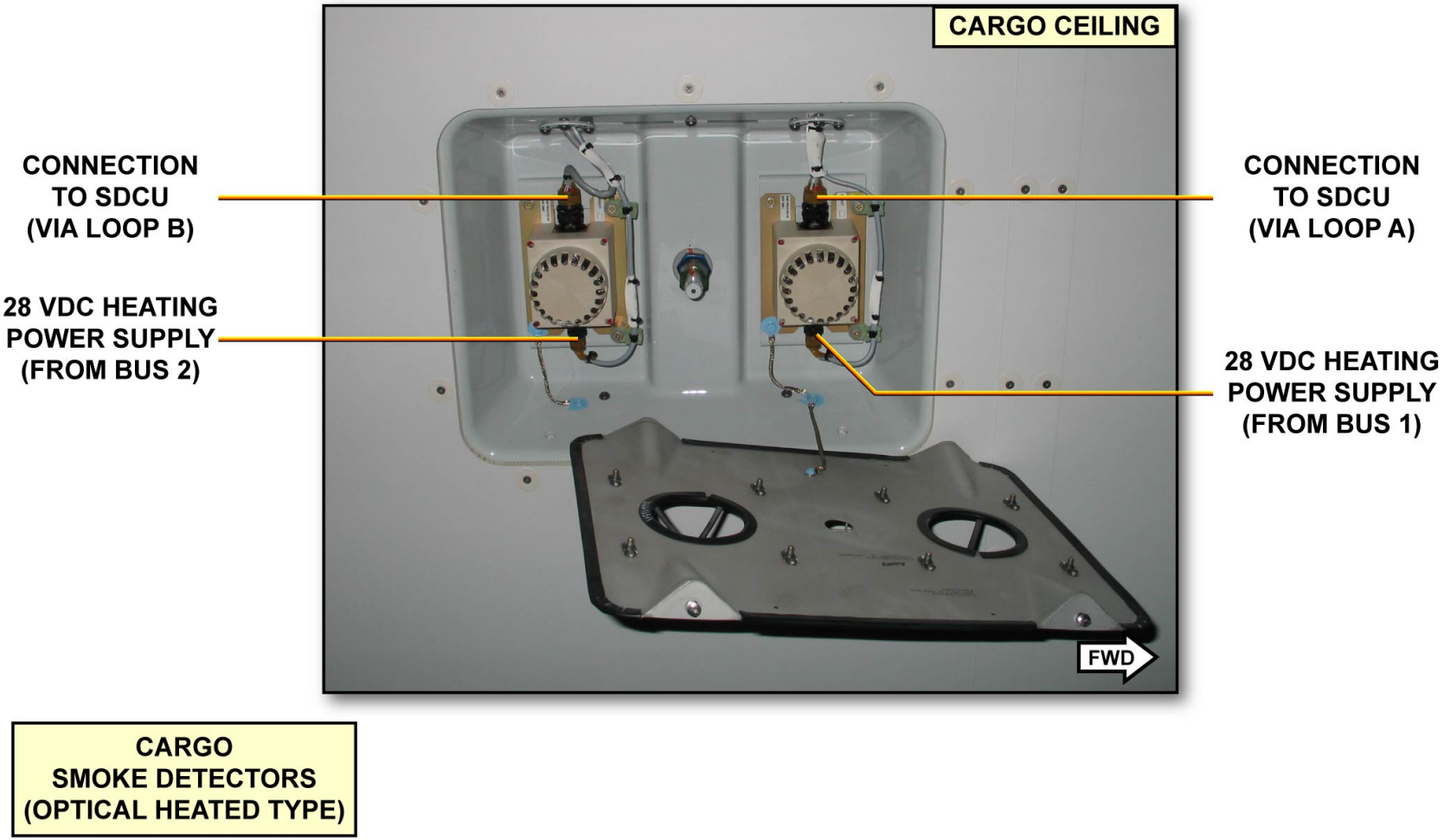

CARGO FIRE PROTECTION DESCRIPTION - DETECTOR DESCRIPTION

G7508471 - G3NT1T0 - FM26D500000003

This Page Intentionally Left Blank

G7508471 - G3NT1T0 - FM26D500000003

CARGO FIRE PROTECTION D/O (3)

CARGO FIRE PROTECTION DESCRIPTION (continued)

CARGO SMOKE DETECTION

Each cargo compartment has cavities:
- 2 cavities in the FWD cargo compartment,
- 2 cavities in the AFT cargo compartment,
- 1 cavity in the BULK cargo compartment,

and each cavity holds 2 smoke detectors and a fire extinguishing nozzle.

G7508471 - G3NT1T0 - FM26D500000003

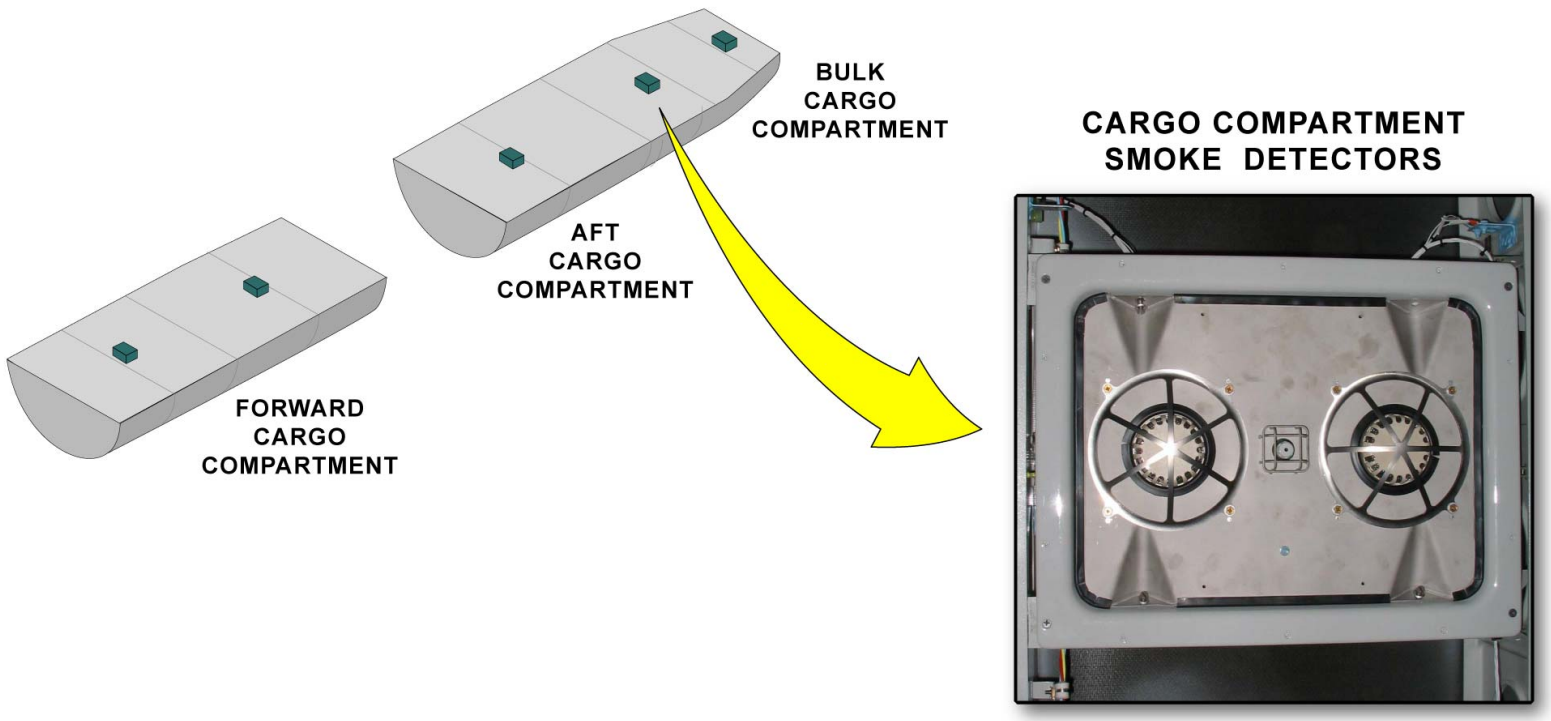

CARGO FIRE PROTECTION DESCRIPTION - CARGO SMOKE DETECTION

G7508471 - G3NT1T0 - FM26D500000003

CARGO FIRE PROTECTION D/O (3)

CARGO FIRE PROTECTION DESCRIPTION (continued)

FIRE EXTINGUISHER BOTTLE DESCRIPTION

Two fire extinguisher bottles are installed in the FWD cargo compartment. The bottles contain the fire-extinguishing agent, halon 1301. The bottles are made of stainless steel and are hermetically sealed.

Each bottle has:

- a pressure switch which sends a signal to the SDCU if the pressure is insufficient (due to a discharge or a leak problem),
- a fill-safety valve which has two functions: it lets the bottle be filled and lets the agent flow into the FWD cargo compartment if the pressure in the bottle increases to a dangerous level,
- two discharge heads, sealed with metal diaphragms and connected to the distribution pipes.

Each discharge head has:

- a filter,
- an electrically operated cartridge.

The filter protects the cartridge and the diaphragm from larger unwanted particles. Each cartridge has two squibs (squib A and squib B) powered by 2 different supplies (HOT BUS and DC BUS). When any of the two squibs is electrically powered, the cartridge explodes, ruptures the metal diaphragm in the discharge outlet enabling the agent to flow through the discharge head to the distribution pipes.

G7508471 - G3NT1T0 - FM26D500000003

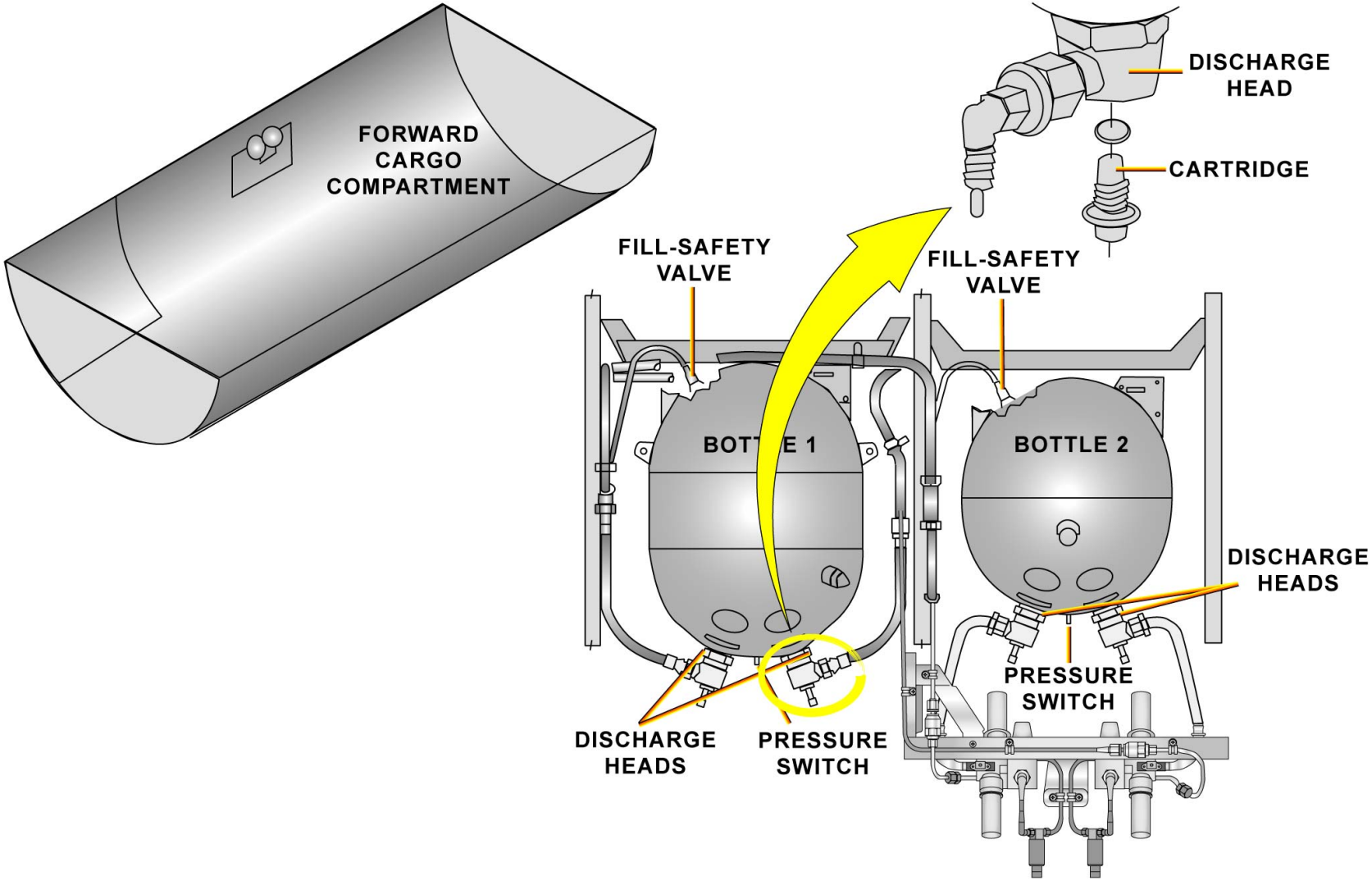

CARGO FIRE PROTECTION DESCRIPTION - FIRE EXTINGUISHER BOTTLE DESCRIPTION

G7508471 - G3NT1T0 - FM26D500000003

CARGO FIRE PROTECTION D/O (3)

CARGO FIRE PROTECTION DESCRIPTION (continued)

FMS DESCRIPTION

A flow metering system is installed on the discharge outlets of bottle 2. It makes sure that a constant flow is maintained for 240 minutes. The FMS is composed of a check valve, a halon filter, a restrictor, a pressure reducer and a pressure switch. The discharge pressure switch sends a signal to the SDCU when a flow of the bottle agent is detected in the flow metering system.

G7508471 - G3NT1T0 - FM26D500000003

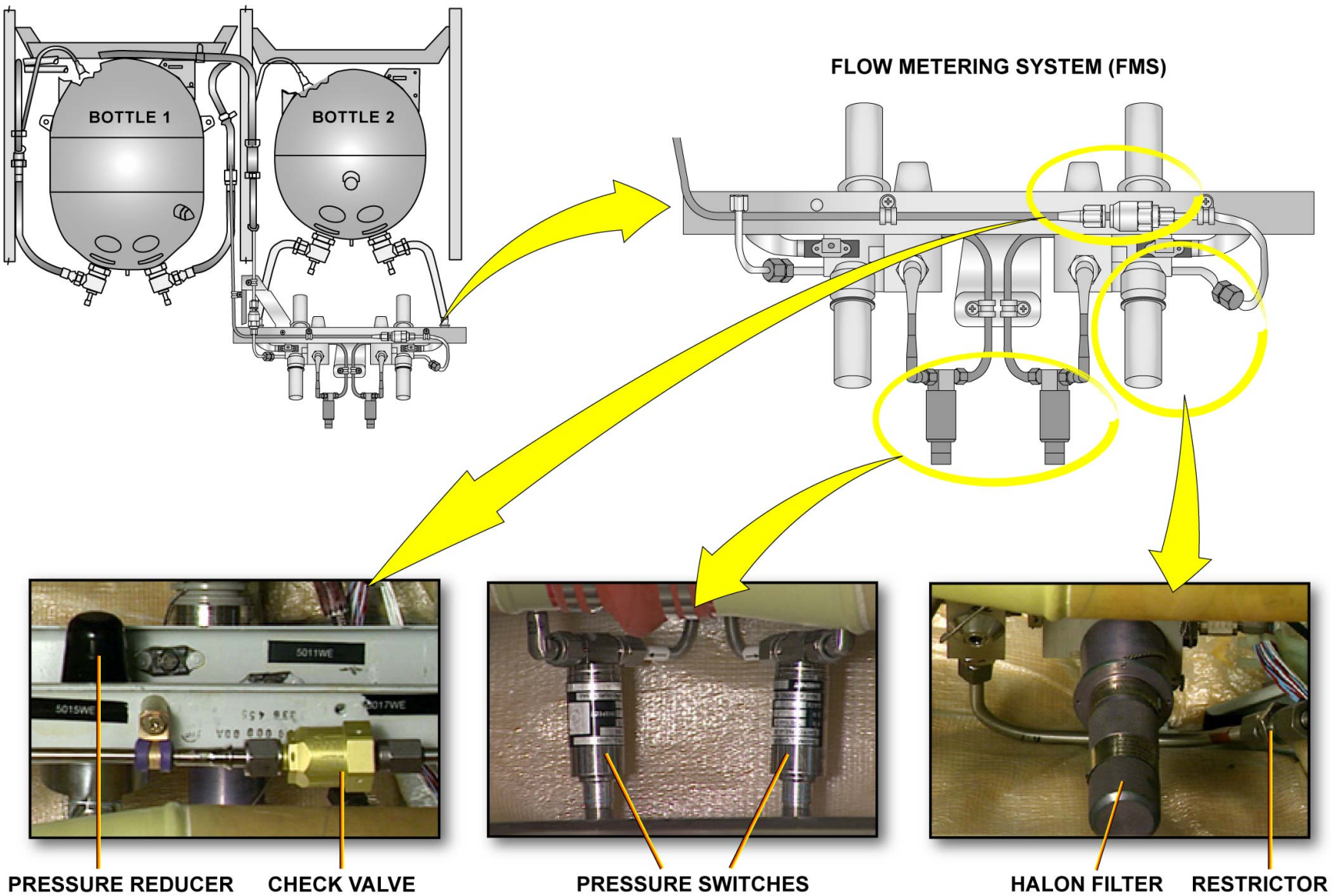

CARGO FIRE PROTECTION DESCRIPTION - FMS DESCRIPTION

CARGO FIRE PROTECTION D/O (3)

SYSTEM OPERATION IN CASE OF CARGO SMOKE

A normal or an abnormal case of cargo smoke detection can occur. We are going to describe the system operation in these two cases.

NORMAL OPERATION IN CASE OF FWD CARGO SMOKE

A smoke condition appears when a pair of smoke detectors in the cargo compartment detects smoke. The variable voltage in the smoke detector increases to more than the smoke threshold for more than 5 seconds, the SDCU generates a smoke warning signal to the Flight Warning Computer (FWC) and to the Ventilation Controller (VC).
When cargo smoke is detected, the continuous repetitive chime sounds, the MASTER WARNing flashes, a warning message is displayed on the Engine/Warning Display (EWD) and the corresponding SMOKE light on the CARGO SMOKE panel comes on. The optional FWD cargo compartment isolation valves are automatically closed and the corresponding ISOLation VALVES FAULT light on the CARGO AIR CONDitioning panel comes on. When the optional FWD ISOLation VALVES P/B is set to OFF, the isolation valves closure is confirmed.
When the FWD AGENT P/B is pressed, the extinguisher agent from bottle 1 flows directly to the cargo compartment. The agent is released in approximately 1 minute. The extinguishing agent from bottle 2 flows through the FMS. The agent is released in approximately 240 minutes. When the agent has been released, the pressure switch on the bottle sends a signal to the SDCU.
The BTL1 light on the DISCH indicator comes on first, as pressure in bottle 1 quickly decreases (after approximately 1 minute). The BTL 2 light on the DISCH indicator comes on when the pressure in bottle 2 has reduced sufficiently.

G7508471 - G3NT1T0 - FM26D500000003

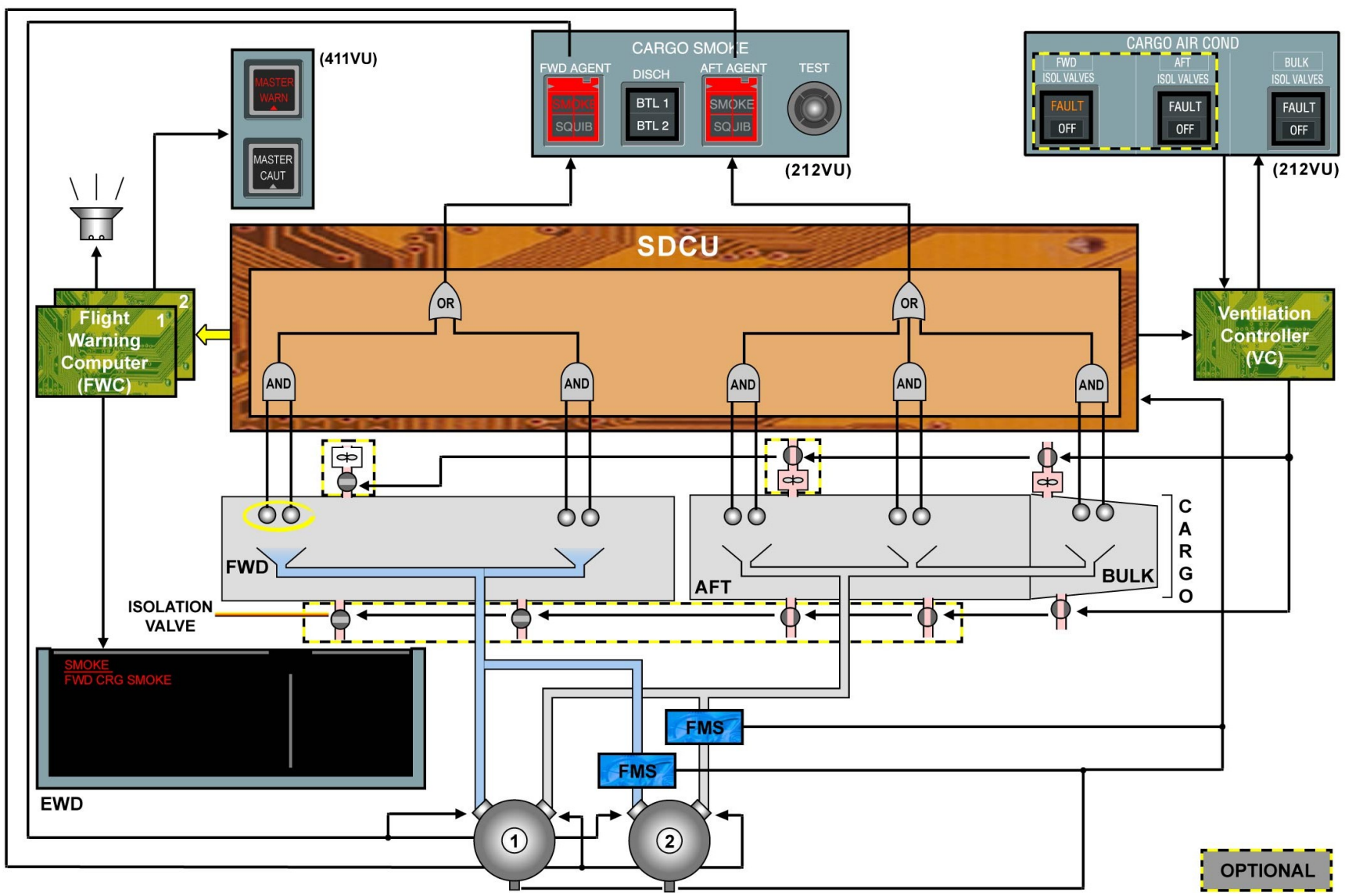

SYSTEM OPERATION IN CASE OF CARGO SMOKE - NORMAL OPERATION IN CASE OF FWD CARGO SMOKE

G7508471 - G3NT1T0 - FM26D500000003

CARGO FIRE PROTECTION D/O (3)

SYSTEM OPERATION IN CASE OF CARGO SMOKE (continued)

ABNORMAL OPERATION IN CASE OF FWD CARGO SMOKE

If a bottle does not discharge correctly, the SDCU will not receive, within 2 minutes, the bottle or FMS pressure switch information and will trigger a "ForWarD (AFT) CaRGo BoTtLe1(2) FAULT" ECAM warning message. The same ECAM message will be displayed on the EWD, if the SDCU finds a failure in both squibs of a bottle. A "ForWarD (AFT/BULK) CaRGo DETection FAULT" warning message will be displayed on the EWD when the SDCU detects a failure of a pair of smoke detectors (voltage decrease in the smoke detector less than the fault threshold for more than 5 seconds). A "DETection FAULT" warning message will be displayed on the EWD if both SDCU channels fail and/or both loop fail and/or all smoke detectors are lost.

G7508471 - G3NT1T0 - FM26D500000003

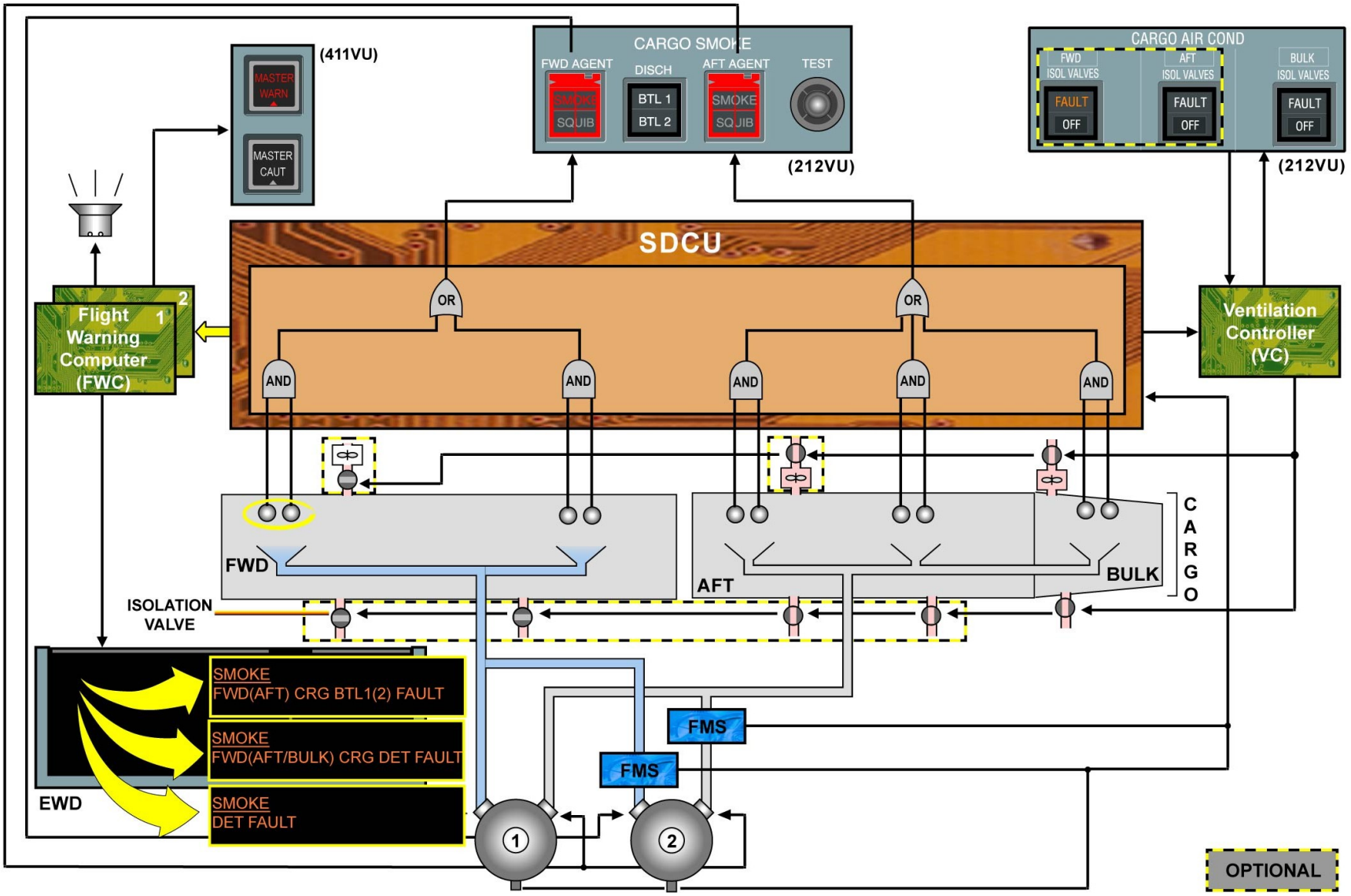

SYSTEM OPERATION IN CASE OF CARGO SMOKE - ABNORMAL OPERATION IN CASE OF FWD CARGO SMOKE

G7508471 - G3NT1T0 - FM26D500000003

AVIONICS SMOKE DETECTION D/O (3)

AVIONICS SMOKE

This module identifies the avionics smoke warnings and describes the sub steps of the procedure.
When smoke is detected, the MASTER WARNing comes on, the Continuous Repetitive Chime (CRC) sounds, the SMOKE and FAULT lights on the VENTILATION panel come on.
The actions to be performed appear on the EWD.
If smoke is confirmed, use the oxygen mask and establish crew communication.
Stop the cabin fans to prevent smoke entering the cockpit and cabin by setting the CAB FANS P/B to OFF.
The extract fan of the avionics ventilation system must be set to OVeRriDe position, to evacuate the smoke overboard.
When the EXTRACT P/B is set to OVeRriDe, the air is extracted through the overboard valve which is partially open.
The COMMERCIAL P/B is set to OFF to isolate commercial loads including galleys. Land as soon as possible and if required apply the smoke procedure.
In case of avioncs smoke on ground, the aircraft must be de-energized.
The procedure to be applied is as follows:
- set all the thrust levers to IDLE,
- set the PARKing BreaK to ON ,
- advise the ground crew and notify the situation to the Air Traffic Control (ATC),
- set all the ENGine MASTER switches to OFF,
- set the ADIRS Mode rotary selectors to OFF,
- set the APU BLEED P/B to OFF,
- set the APU MASTER switch to OFF,
- set the APU GENenerator P/B to OFF,
- set the EXTernal PoWeR P/Bs to OFF,
- set BATtery P/Bs to OFF.

G7508471 - G3NT1T0 - FM26D6F26AZ0102

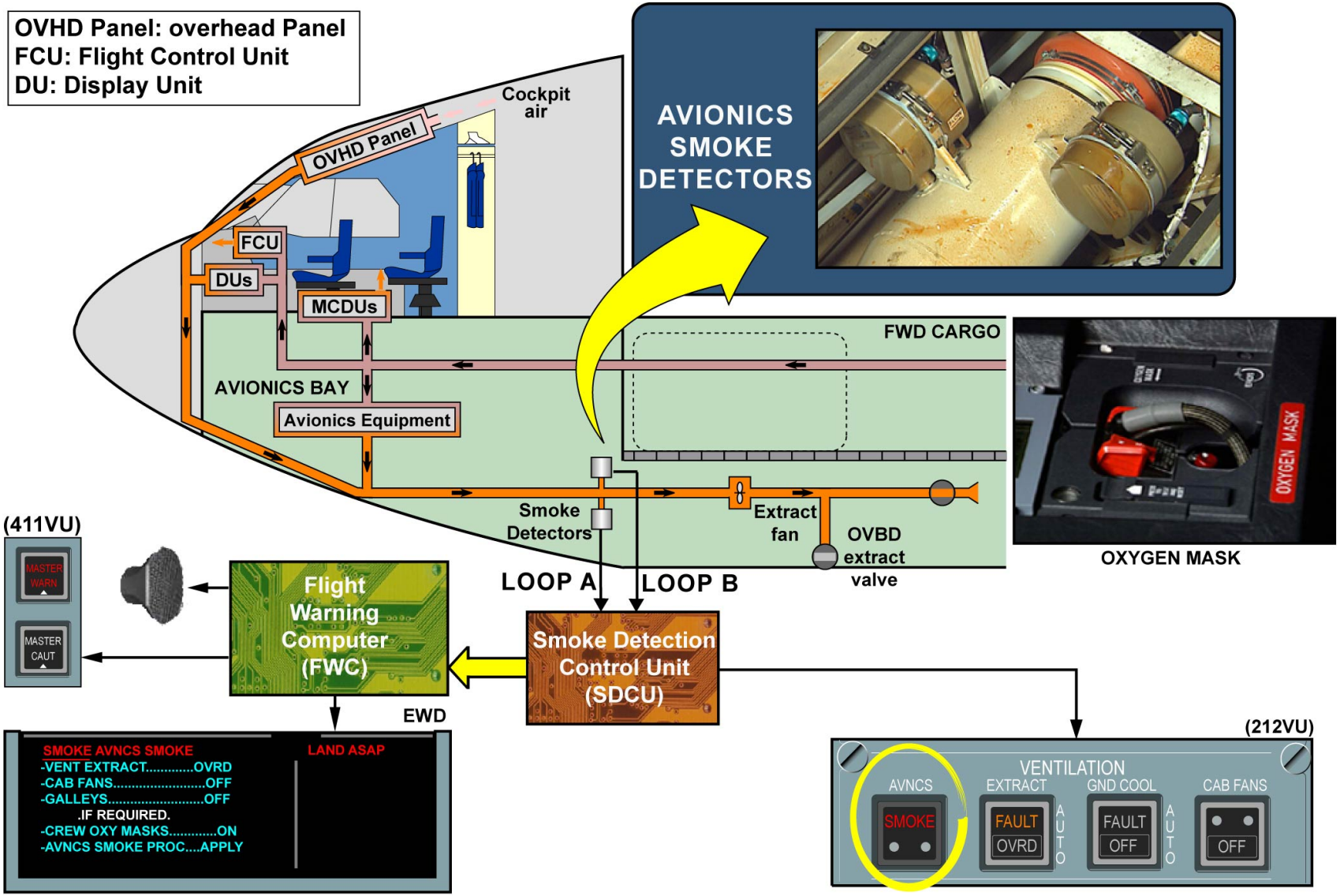

AVIONICS SMOKE

G7508471 - G3NT1T0 - FM26D6F26AZ0102

AIRBUS S.A.S.
31707 BLAGNAC cedex, FRANCE
STM
REFERENCE G7508471
NOVEMBER 2008
PRINTED IN FRANCE
AIRBUS S.A.S. 2008
ALL RIGHTS RESERVED

AN EADS COMPANY

A330-200/300
TECHNICAL TRAINING MANUAL
MAINTENANCE COURSE - T1 (LVL 2&3) (RR Trent 700)
FLIGHT CONTROLS

This document must be used for training purposes only

Under no circumstances should this document be used as a reference

It will not be updated.

All rights reserved
No part of this manual may be reproduced in any form,
by photostat, microfilm, retrieval system, or any other means,
without the prior written permission of AIRBUS S.A.S.

AIRBUS Environmental Recommendation
Please consider your environmental responsability before printing this document.

FLIGHT CONTROLS

Flight Controls Line Maintenance Briefing (2) 2

ELECTRICAL FLIGHT CONTROL SYSTEM

Side Stick D/O (3) 34
Roll D/O (3) 38
Pitch D/O (Elevator) (3) 48
Pitch D/O (THSA) (3) 60
Yaw D/O (3) 70
Primary CTL Speed Brake & Lift Dumping D/O (3) 86

SLATS AND FLAPS

Secondary CTL Slat & Flap Transmission D/O (3) 100
Secondary CTL Slat & Flap NORM Operation D/O (3) 134
Secondary CTL Slat & Flap ABNORM OPER D/O (3) 156
Secondary Control Laws D/O (3) 176

MAINTENANCE PRACTICE

Flight Controls MCDU Pages (2) 184
Flight Controls System Base Maintenance (3) 190

FLIGHT CONTROLS LINE MAINTENANCE BRIEFING (2)

SYSTEM OVERVIEW

INTRODUCTION

The fly by wire flight control system controls:
- the primary flight controls which control the pitch, roll and yaw axis,
- the secondary flight controls which include the speed brakes and ground spoilers (Lift dumping),
- the high lift function which includes the flaps and slats .

The flight control system is monitored by the Onboard Maintenance System (OMS) for maintenance and troubleshooting functions. When doing maintenance on the aircraft, all safety procedures listed in the Aircraft Maintenance Manual (AMM) must be applied.
Let's see their location on the A/C.

G7508471 - G3NT1T0 - FM27B1000000001

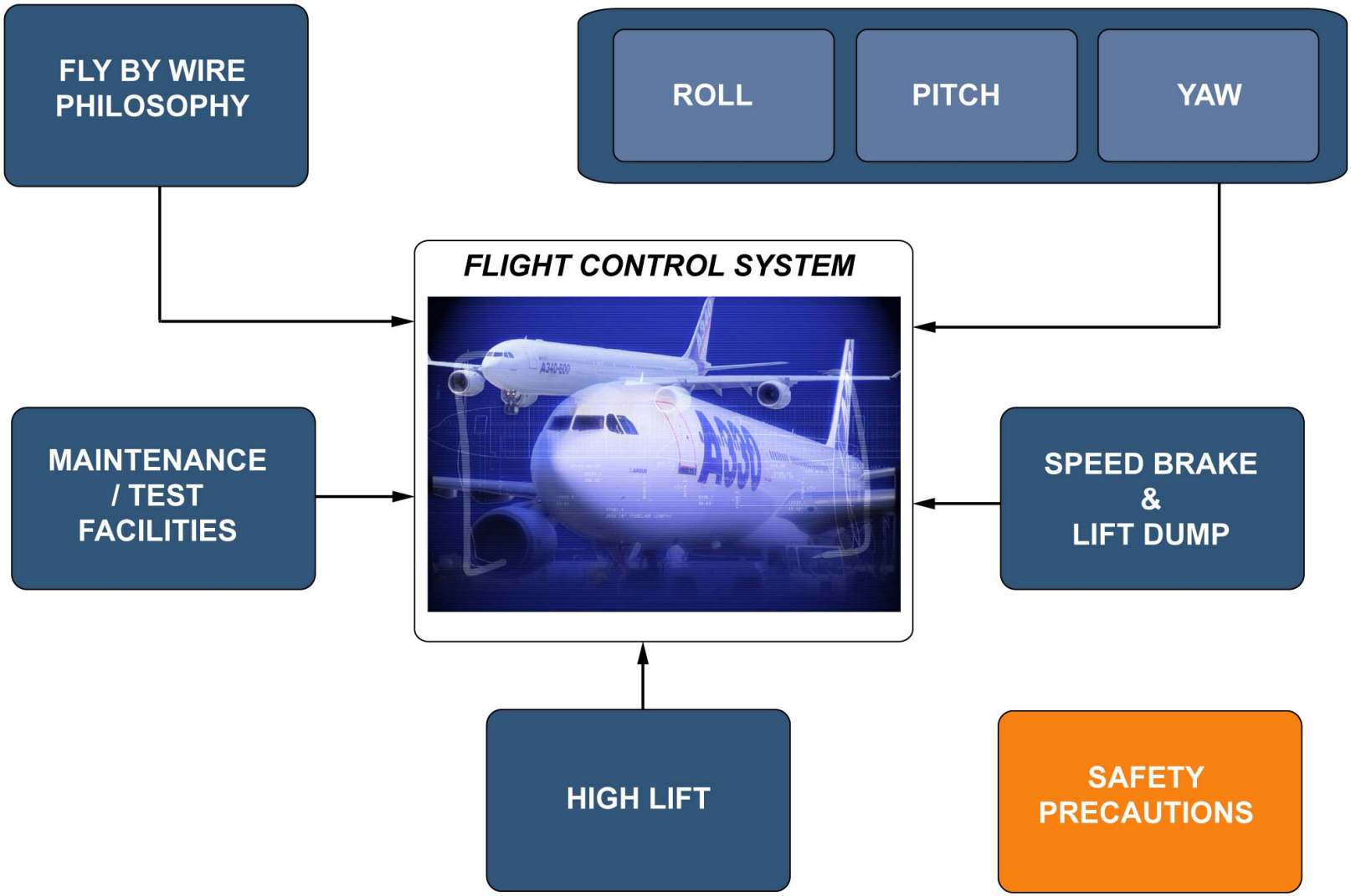

SYSTEM OVERVIEW - INTRODUCTION

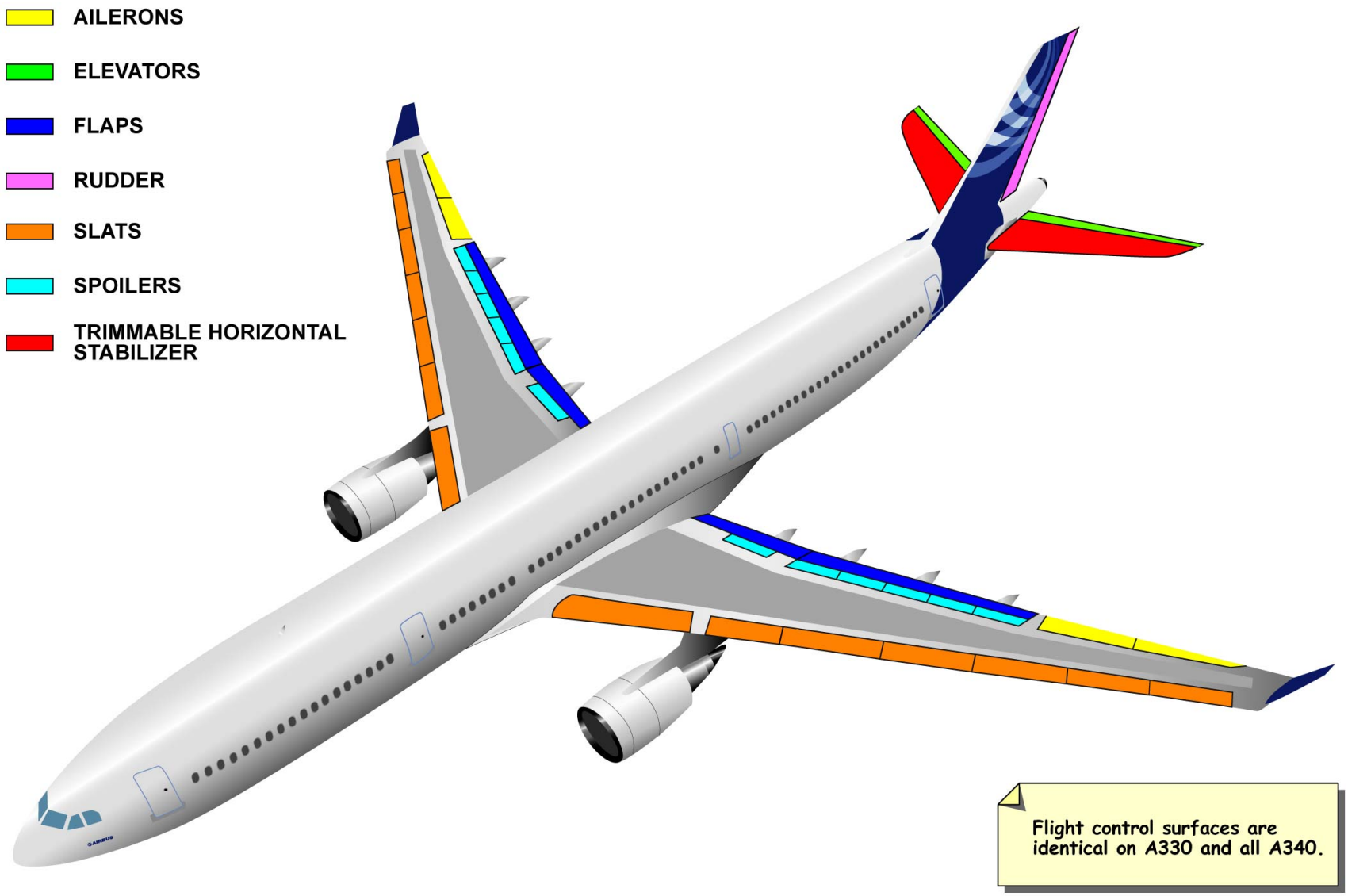

SYSTEM OVERVIEW - INTRODUCTION

This Page Intentionally Left Blank

G7508471 - G3NT1T0 - FM27B1000000001

FLIGHT CONTROLS LINE MAINTENANCE BRIEFING (2)

SYSTEM OVERVIEW (continued)

FLY BY WIRE PRINCIPLE

The relation between the pilot input on the side stick and the aircraft response is called control law. The pilot's side stick orders are sent to the flight control computers. The computers elaborate the control law surface deflection orders. An electrical command signal is sent to the related surfaces servo actuator. The aircraft response feedback is sent back to the flight control computers and compared to the pilot orders. The fly by wire design requires the aircraft to be servo-looped.

NOTE: Note: Side stick electrical command signals are sent to the computers, which elaborate surface deflection orders and send electrical command signals to servo-actuators to move surfaces. It replaces the mechanical link found on conventional aircraft flight control systems.

G7508471 - G3NT1T0 - FM27B1000000001

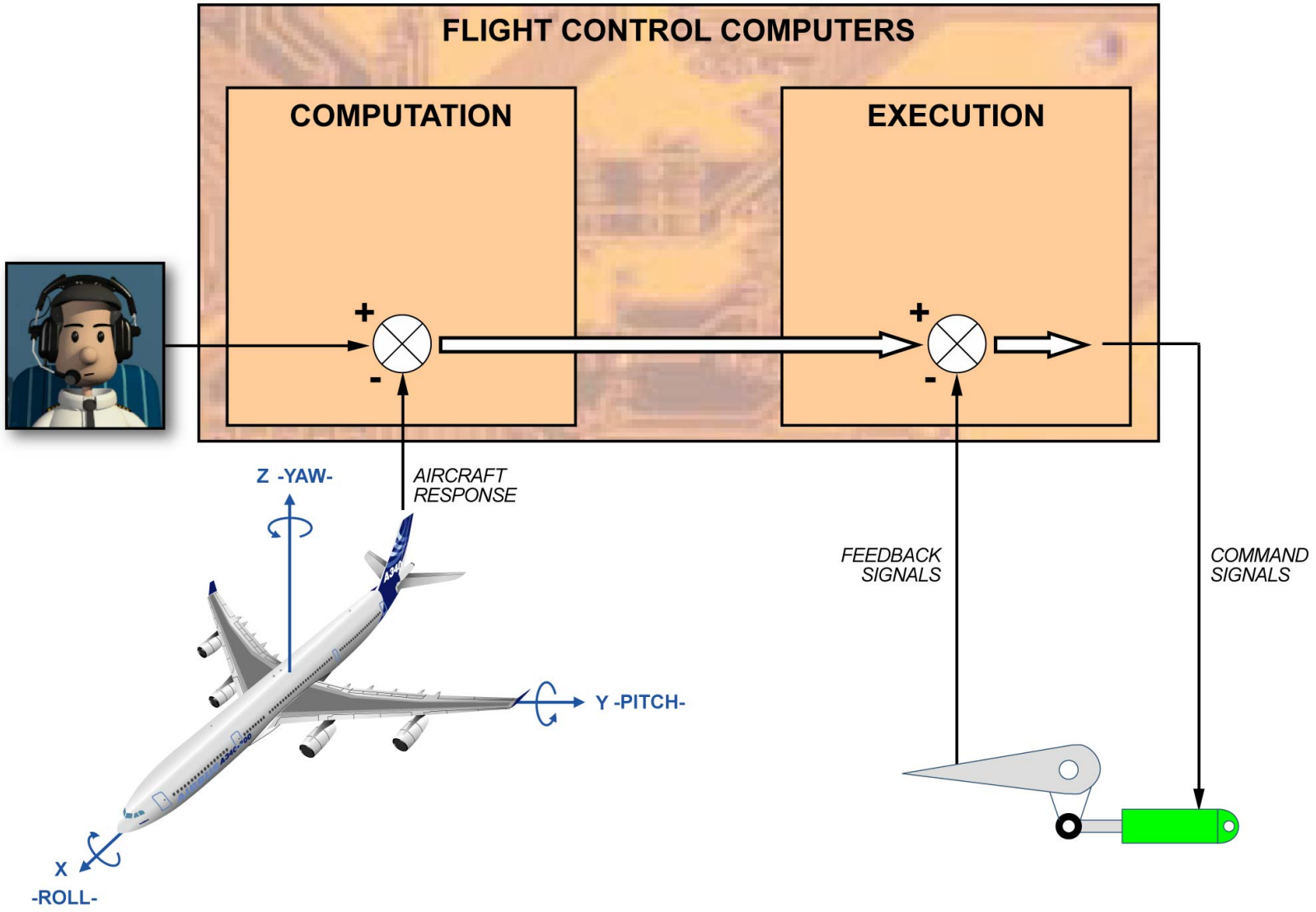

SYSTEM OVERVIEW - FLY BY WIRE PRINCIPLE

FLIGHT CONTROLS LINE MAINTENANCE BRIEFING (2)

SYSTEM OVERVIEW (continued)

FLIGHT CONTROL LAWS

The deflection orders are processed by the flight control system according to different control laws. The aircraft is controlled in all axes through:
- the pitch control law,
- the lateral control law (roll and yaw).

Depending on the status of the flight control system or other systems (number of computers available, status of peripheral components and sensors) three different sets of control laws can be engaged:
- the normal law, with all protections,
- the alternate law, with reduced protections,
- the direct law, without protections.

Control laws automatically switch from normal to alternate or direct according to the nature and number of failures. After loss of normal laws, the reconfiguration of control laws is different for the pitch axis and for the lateral axis.

The normal law is only implemented in the FCPCs. The FCSCs can only compute the yaw alternate law and the direct law.

G7508471 - G3NT1T0 - FM27B1000000001

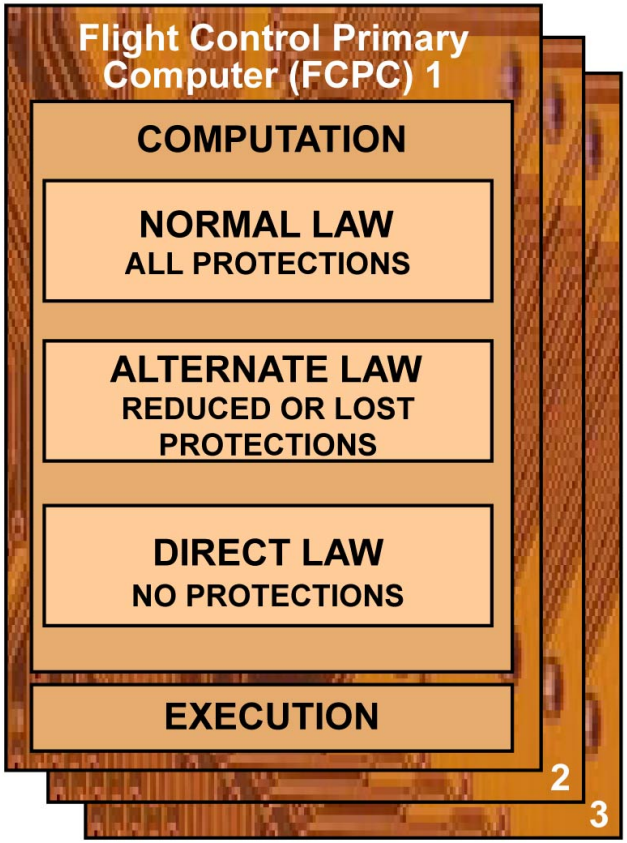

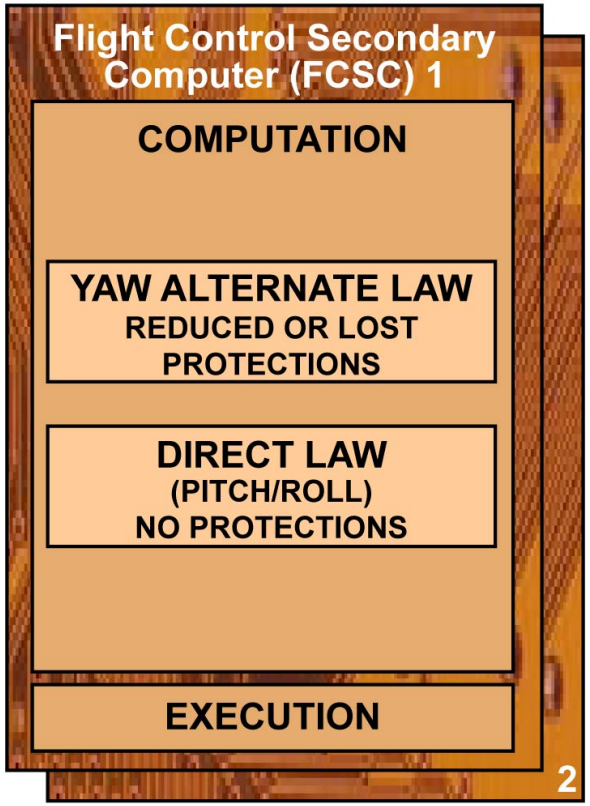

SYSTEM OVERVIEW - FLIGHT CONTROL LAWS

FLIGHT CONTROLS LINE MAINTENANCE BRIEFING (2)

SYSTEM OVERVIEW (continued)

FLIGHT CONTROLS ARCHITECTURE

The three FCPCs, also called "PRIM", and the two FCSCs, also called "SEC", receive pilot orders from:
- the side sticks,
- the rudder pedals,
- the rudder trim control panel
- the speed brake control lever.

The FCPCs receive autopilot inputs from the Flight Management Guidance and Envelope Computers (FMGECs). The FCPCs and FCSCs interface together. They control and monitor:
- the ailerons,
- the spoilers,
- the elevators,
- the rudder.

The THS is controlled by the FCPCs only. The THS can also be mechanically operated through the trim wheel. In case of loss of the FCPCs and FCSCs, the Backup Control Module (BCM) controls the aircraft yaw via the rudder. The two Flight Control Data Concentrators (FCDCs) interface the FCPCs and FCSCs with:
- the Electronic Instrument System (EIS),
- the Centralized maintenance system (CMS),
- the recording system.

G7508471 - G3NT1T0 - FM27B1000000001

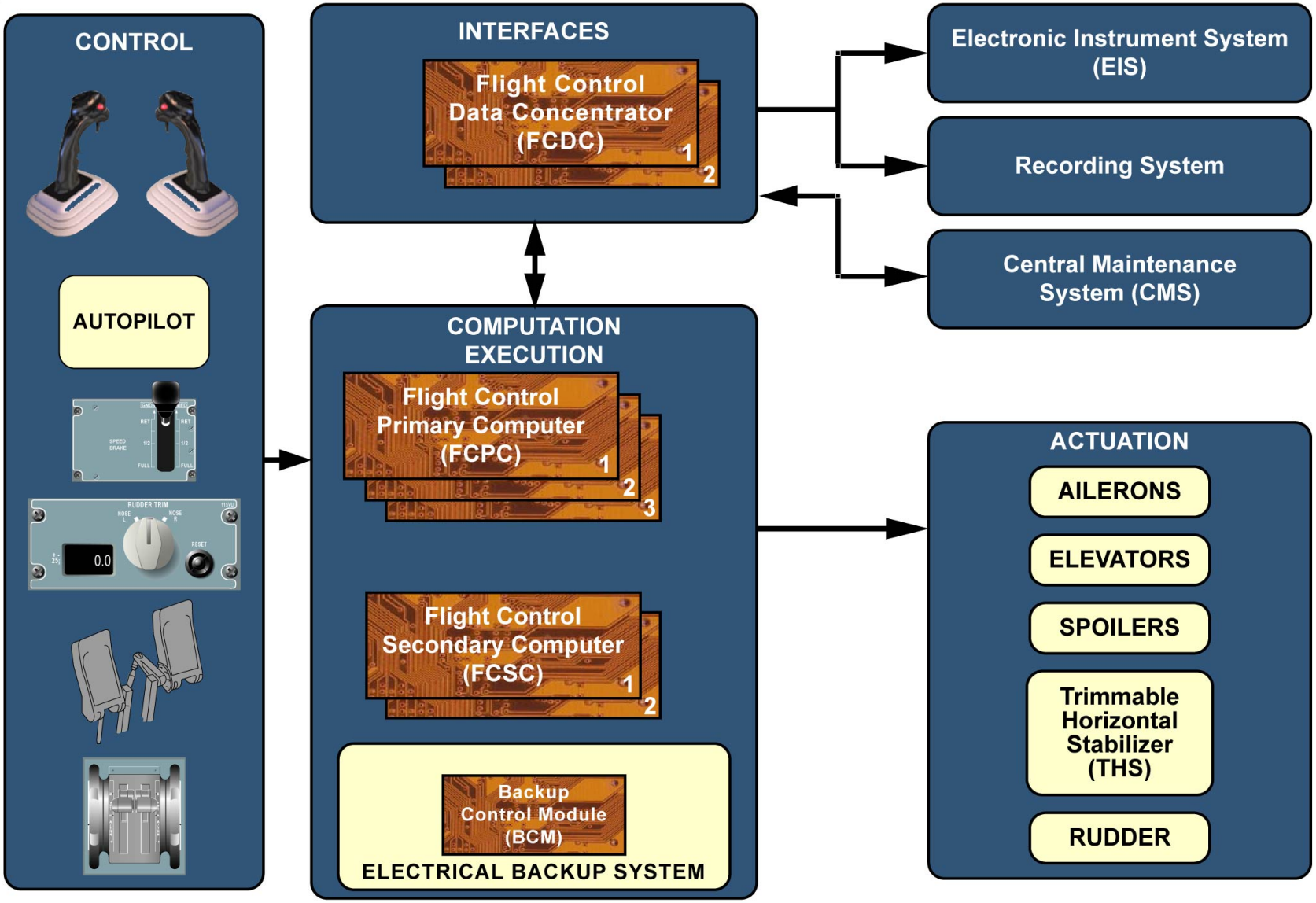

SYSTEM OVERVIEW - FLIGHT CONTROLS ARCHITECTURE

G7508471 - G3NT1T0 - FM27B1000000001

FLIGHT CONTROLS LINE MAINTENANCE BRIEFING (2)

SYSTEM OVERVIEW (continued)

COMPUTER MASTER / SERVO LOOP CONFIGURATION

The 3 FCPCs and the 2 FCSCs fulfill two functions:
- the computation part which elaborates the surface deflection orders,
- the execution part which fulfills the servoing of the deflection orders.

One computer only (FCPC 1 in normal configuration) is the master. This computer generates the deflection orders and transmits them to the other computers. The five computers signal their related surfaces and fulfill the servo loop controls.

Each computer establishes the highest level of law that can be engaged according to its internal monitoring and the availability of ADIRUs, control signals, surface actuation and the positions of the THS, the flaps and the slats.

The computer which has the highest level of law, and according to the computer priority, is the master for law computation: normally FCPC 1, then FCPC 2 and 3.

Among the computers which can engage the highest level of law, the computer having the top priority is chosen.

NOTE: Note: the priority logic for law engagement is totally independent from the servo-loop engagement logic.

G7508471 - G3NT1T0 - FM27B1000000001

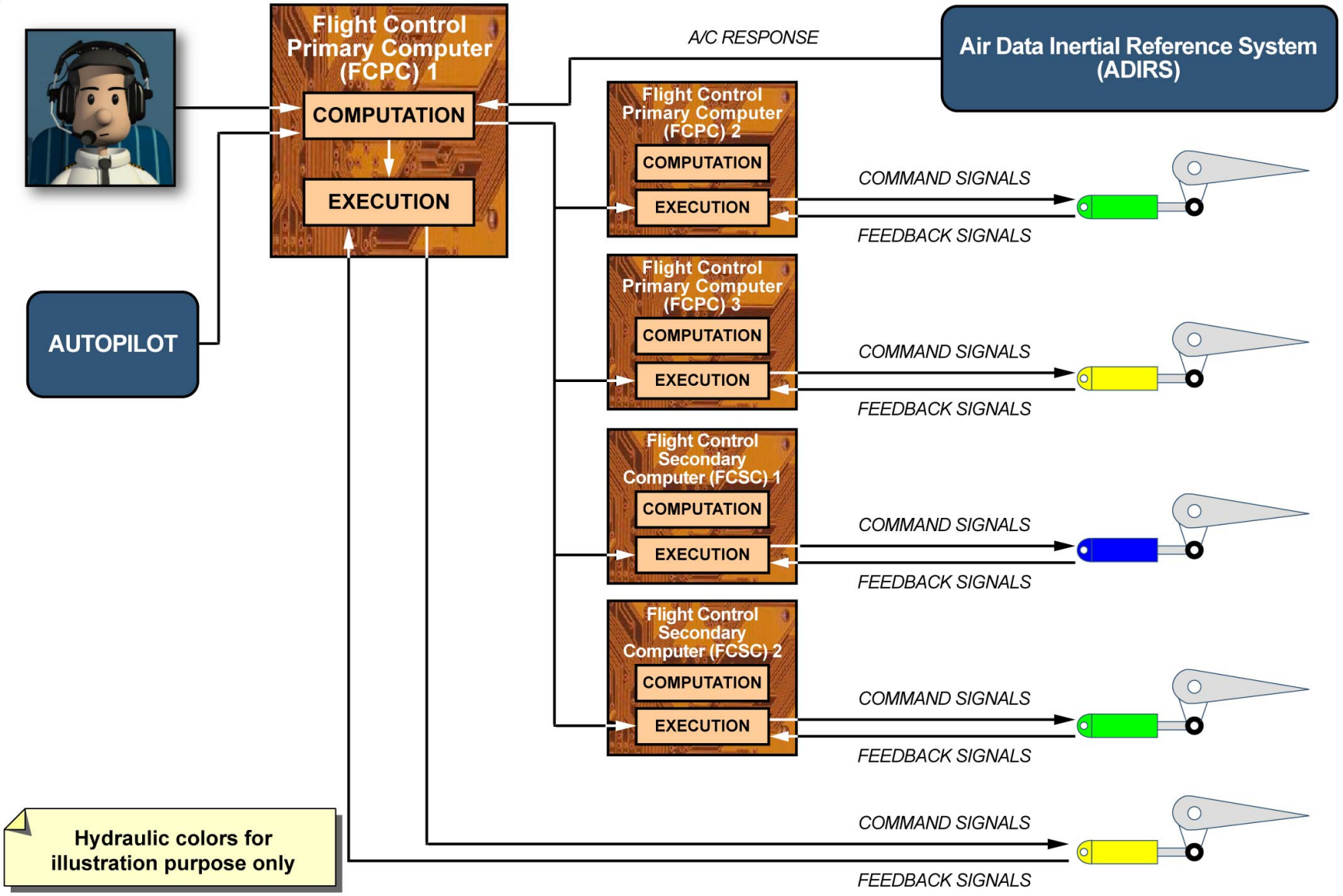

SYSTEM OVERVIEW - COMPUTER MASTER / SERVO LOOP CONFIGURATION

G7508471 - G3NT1T0 - FM27B1000000001

FLIGHT CONTROLS LINE MAINTENANCE BRIEFING (2)

ACTUATION RECONFIGURATION PRIORITY

ACTUATORS

The actuators are hydraulically powered by one of the three hydraulic circuits, except the THS servo-motors which are electrically driven.
Roll control is done by the one inboard and one outboard aileron on each wing and the roll spoilers (spoilers 2 through 6). The aileron droop function is provided by all the ailerons. The ailerons are deflected downwards when the flaps are extended to follow the contours of the wing. The aileron droop function increases the lift on the part of the wing with no flaps.
The pitch control is done by the elevators and by the Trimmable Horizontal Stabilizer (THS). The trim wheel can also mechanically control the hydraulic motors. The trim wheel has priority over the electrical control. The mechanical control is used:
- on ground, for setting the THS take-off trim,
- in flight, as a back-up system if THS electrical control is lost.
The rudder fulfills the yaw control. The Pedal Feel and Trim Unit (PFTU) gives rudder pedal artificial feel, trim function and feedback movement.
The Backup Control Module(BCM) is an electronic module, which fulfills the yaw control in case of flight control computer failures. The Backup Power Supplies (BPSs) supply electrical power to the BCM from two hydraulically driven motors. The BCM transmits the rudder pedals order to the rudder, and also fulfills dutch roll damping. The PFTU interfaces the BCM with the pedals.
All spoilers fulfill the speed brake function. All the spoilers fulfill the ground lift dump function when specific ground logic conditions are fulfilled.

COMPUTERS

The relationship between actuators and computer is indicated on the schematic.

PRIORITY SERVOCONTROLS

There are two servo controls for each aileron and elevator surface. In normal configuration, one servo control actuates the surface. It is called priority servo control and is in active mode. The second, which follows the surface deflection, is in damping mode.
A third mode called re-centering sets the surfaces in neutral position in case of specific failures (for elevators on all A330, 340 and also inboard ailerons for A340-500/600).
There are three servo controls for the rudder. Alls are active at the same time.
There is only one servo control per spoiler.

RECONFIGURATION PRIORITIES

In normal configuration, the following computers ensure the servoloop control. The arrows indicate the actuation reconfiguration priorities in case of either electrical failure, computer failure or loss of hydraulic circuits.

G7508471 - G3NT1T0 - FM27B1000000001

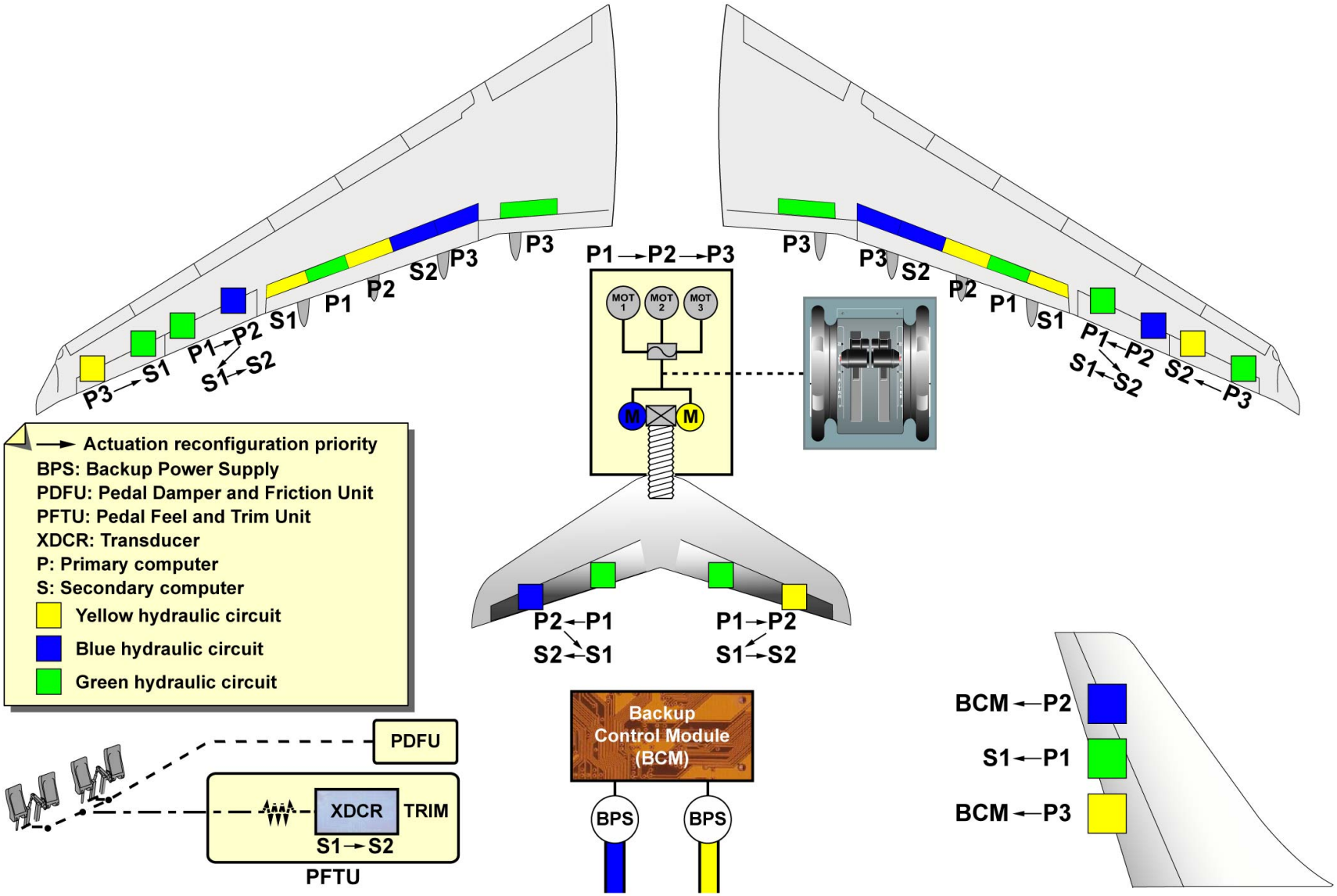

ACTUATION RECONFIGURATION PRIORITY - ACTUATORS ... RECONFIGURATION PRIORITIES

G7508471 - G3NT1T0 - FM27B1000000001

FLIGHT CONTROLS LINE MAINTENANCE BRIEFING (2)

MEL/DEACTIVATION

DEACTIVATION OF THE OUTBOARD AILERON SERVOCONTROL

The procedure is similar for each of the outboard aileron servocontrols.
Put the related hydraulic system in the depressurized configuration before maintenance action:
- open, safety and tag the circuit breakers related to the Engine Driven Pump (EDP) and Electrical pumps,
- make sure that there is no hydraulic supply from a ground power cart,
- check on the ECAM SD HYD page that the pressure of the related hydraulic system is 0 psi,
- put the warning notices in position to tell persons not to pressurize the related hydraulic system on the hydraulic control panel in the cockpit and on the ground service panel of the related hydraulic system.

Place a warning notice in the cockpit to tell persons not to operate the flight controls.
Open, safety and tag all the circuit breakers related to the Flight Control Computers (FCPC and FCSC).
Make sure that the pressure and the return lines are correctly connected to the servocontrol and check that there is no hydraulic leakage at the servocontrol. Disconnect the electrical connector from the receptacle of the servocontrol and place blanking caps on both connector and receptacle to protect them. Do not forget to safely attach the connector to a pipe with a tie-wrap.
Remove the tags and close all the previously Flight Control Computers (FCPC and FCSC) opened C/Bs.
To do the operational test of the aileron hydraulic actuation, make sure that the deactivated servocontrol does not operate.

o use the LEAK MEASUREMENT VALVES P/BSW, isolate the other servocontrol which has not to be tested,
o use the LEAK MEASUREMENT VALVES P/BSW in order to isolate the other servocontrol which has not to be tested,
o operate the side stick to move the aileron.
If no other servicing tasks have to be completed, the area can be closed.
A warning notice will be placed in the cockpit to tell the crew that the outboard aileron servocontrol is unserviceable and an entry has to be made in the logbook.

NOTE: The C/Bs 7CE3 and 7CE4 have to be closed at the same time. If this operation is not properly done, the FAULT legend of the primary (PRIM) 3 P/BSW comes on. In this case, repeat the opening and closing of both C/Bs.

G7508471 - G3NT1T0 - FM27B1000000001

Make sure that hydraulic systems are depressurized.

Open, safety and tag this(these) circuit breaker(s):

PANEL	DESIGNATION	FIN	LOCATION
721VU	HYD PUMP G CTL	9JV	U09
721VU	HYD PUMP B ENG 1	11JB	U08
721VU	HYD PUMP B CTL	9JC	X12
722VU	HYD PUMP Y SVCE	10JJ	N46
722VU	HYD PUMP Y CTL	9JJ	R36
722VU	HYD PUMP Y ENG 2	12JY	T46
722VU	HYD PUMP G ENG 2	14JG1	X45
722VU	HYD PUMP G ENG 1	14JG2	E67

A330 Circuit Breakers shown as example.

Make sure that warning notice is set in the cockpit.

G7508471 - G3NT1T0 - FM27B1000000001

MEL/DEACTIVATION - DEACTIVATION OF THE OUTBOARD AILERON SERVOCONTROL

Open and tag the Circuit Breakers:

PANEL DESIGNATION	FIN	LOCATION
FOR 9CS1		
742VU FCSC 1 NORM	10CE1	C67
FOR 10CS1		
721VU FCPC3 STBY COM	7CE6	R20
721VU FCPC3 STBY MON	7CE5	R19
722VU FCPC 3	7CE3	V42
722VU FCPC 3	7CE4	V38
FOR 9CS2		
722VU FCSC 2	10CE2	T37
742VU FCSC2 STBY SPLY	41CE	D66
FOR 10CS2		
721VU FCPC3 STBY COM	7CE6	R20
721VU FCPC3 STBY MON	7CE5	R19
722VU FCPC 3	7CE3	V42
722VU FCPC 3	7CE4	V38

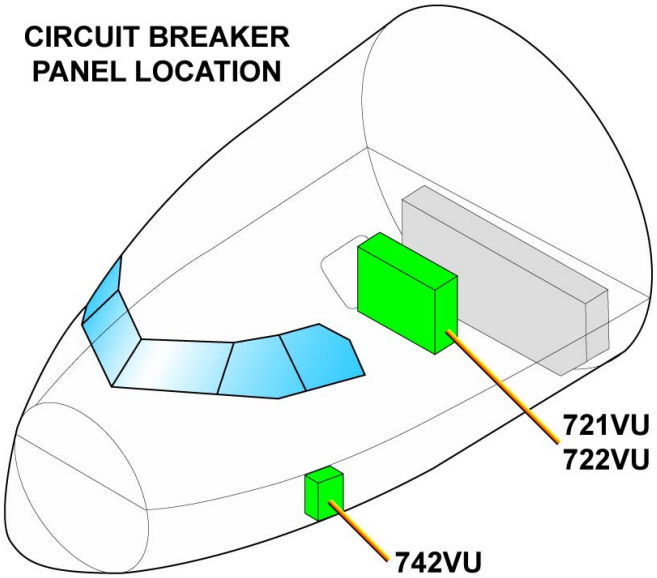

MEL/DEACTIVATION - DEACTIVATION OF THE OUTBOARD AILERON SERVOCONTROL

G7508471 - G3NT1T0 - FM27B1000000001

Deactivation of the servocontrol:

- Make sure that the pressure and the return line are connected and check for no hydraulic leakage.
- Disconnect the electrical connector and place blanking caps.

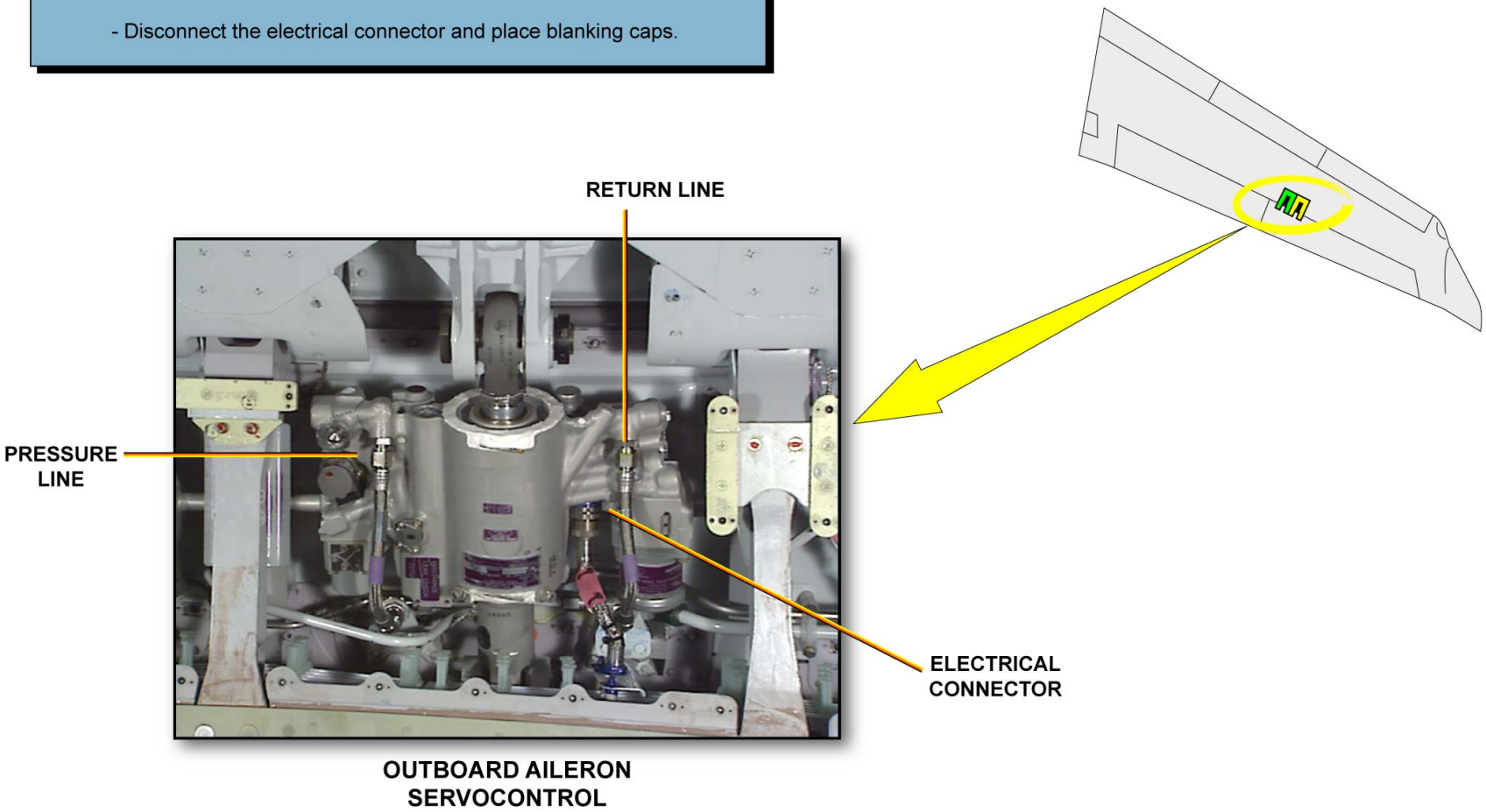

MEL/DEACTIVATION - DEACTIVATION OF THE OUTBOARD AILERON SERVOCONTROL

A330 Circuit Breakers shown as example.

Remove the tags and close the Circuit Breakers:

PANEL	DESIGNATION	FIN	LOCATION
FOR 9CS1			
	742VU FCSC 1 NORM	10CE1	C67
FOR 10CS1			
	721VU FCPC3 STBY COM	7CE6	R20
	721VU FCPC3 STBY MON	7CE5	R19
	722VU FCPC 3	7CE3	V42
	722VU FCPC 3	7CE4	V38
FOR 9CS2			
	722VU FCSC 2	10CE2	T37
	742VU FCSC2 STBY SPLY	41CE	D66
FOR 10CS2			
	721VU FCPC3 STBY COM	7CE6	R20
	721VU FCPC3 STBY MON	7CE5	R19
	722VU FCPC 3	7CE3	V42
	722VU FCPC 3	7CE4	V38

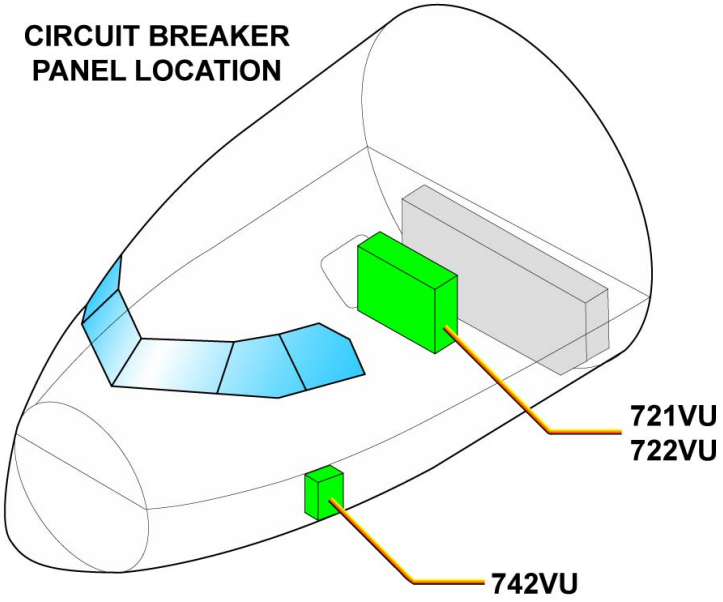

Remove the tags and close the C/Bs:

PANEL	DESIGNATION	FIN	LOCATION
721VU	HYD PUMP G CTL	9JV	U09
721VU	HYD PUMP B ENG 1	11JB	U08
721VU	HYD PUMP B CTL	9JC	X12
722VU	HYD PUMP Y SVCE	10JJ	N46
722VU	HYD PUMP Y CTL	9JJ	R36
722VU	HYD PUMP Y ENG 2	12JY	T46
722VU	HYD PUMP G ENG 2	14JG1	X45
722VU	HYD PUMP G ENG 1	14JG2	E67

The Circuit Breakers 7CE3 and 7CE4 have to be closed at the same time.

If this operation is not done correctly, the FAULT legend of the PRIM 3 P/BSW comes on (only with the P/BSW pushed). In this case, replay the opening and closing of both Circuit Breakers.

MEL/DEACTIVATION - DEACTIVATION OF THE OUTBOARD AILERON SERVOCONTROL

G7508471 - G3NT1T0 - FM27B100000001

Operational test and hydraulic actuation.

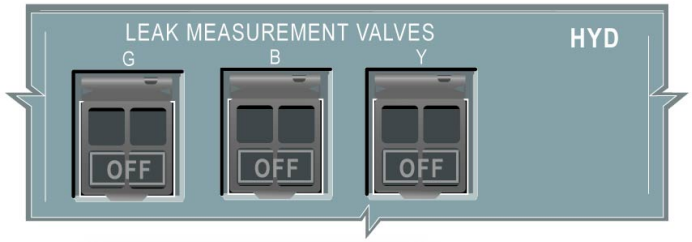

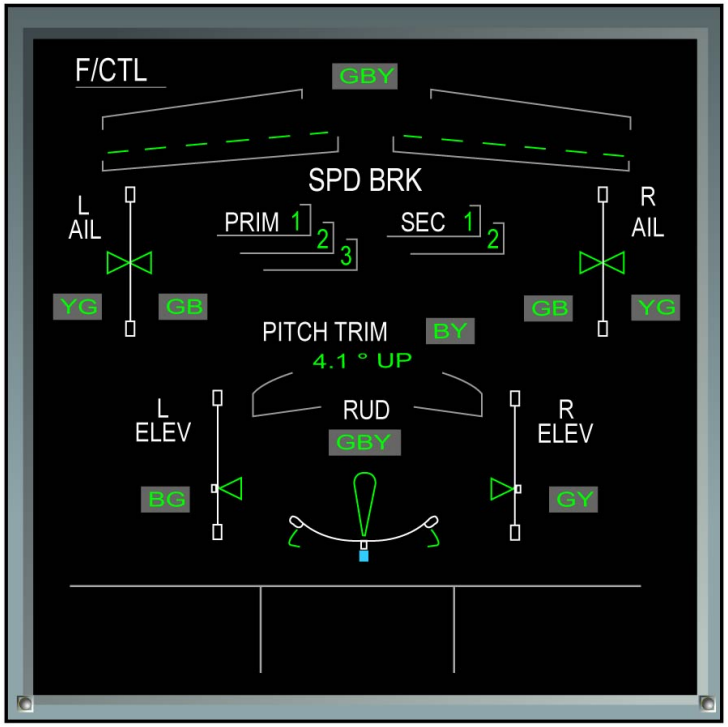

ECAM SD

A warning notice will be placed in the cockpit to tell the crew that the outboard aileron servocontrol is unserviceable and an entry has to be made in the logbook.

MEL/DEACTIVATION - DEACTIVATION OF THE OUTBOARD AILERON SERVOCONTROL

G7508471 - G3NT1T0 - FM27B1000000001

FLIGHT CONTROLS LINE MAINTENANCE BRIEFING (2)

MEL/DEACTIVATION (continued)

DEACTIVATION OF THE THS ACTUATOR ELECTRICAL MOTOR

The Pitch Trim Actuator (PTA) controls the THS hydraulic motors. The PTA has three brushless Direct Current (DC) motors. Each electrical motor is connected to one FCPC.

NOTE: The deactivation is given for the electrical motor 1 but the procedure is the same for motors 2 and 3.

Put the related hydraulic system in the depressurized configuration before maintenance action:
- open, safety and tag the circuit breakers related to the EDP and Electrical pumps,
- make sure that there is no hydraulic supply from a ground power cart,
- check on the ECAM SD HYD page that the pressure of the related hydraulic system is 0 psi,
- put the warning notices in position to tell persons not to pressurize the related hydraulic system on the hydraulic control panel in the cockpit and on the ground service panel of the related hydraulic system.

On the FLT CTL section of the overhead panel, make sure that the PRIM 1, PRIM 2, PRIM 3, SEC 1 and SEC 2 P/BSWs are pressed in the ON position and no indications on the P/BSWs are on.
In the avionics compartment, get access to the C/B panels. Open, safety and tag the C/B related to the electrical motor, as shown in the table.

NOTE: Open only the C/Bs of the THS actuator electrical motor to deactivate it.

Pressurize the aircraft hydraulic systems. Push the F/CTL key to show the F/CTL page on the SD. On the EWD, make sure that the F/CTL PRIM 1 PITCH FAULT warnings are shown.
On the two F/CTL panels, release out PRIM 1, 2 and 3 P/BSWs. The OFF indications come on. Move the pitch trim control wheels located on the center pedestal to the fully UP position. Press in the PRIM 1 P/BSW located on the FLT/CTL section of the panel 241VU and make sure that the pitch trim control wheels do not move.
On the EWD, check that the F/CTL STAB CTL FAULT warning message comes on.
Do the BITE test of the Electrical Flight Control System (EFCS) via the GND SCANNING command and make sure that the subsequent maintenance message is shown:
- FCPC1 (2CE1)/WRG/THS ACTR CIRCUIT BREAKER TO FCPC 1, as the circuit breaker for THS actuator motor 1 is open.

Press in the PRIM 2 and PRIM 3 P/BSWs, the OFF indications disappear. Check that the pitch trim control wheels automatically move back to the 4° UP position.
Depressurize the aircraft hydraulic systems. If no other servicing tasks have to be completed, the area can be closed. Put a warning notice in the cockpit to tell the flight crew that one THS actuator motor (1, 2 or 3) is deactivated. Do not forget to make an entry in the A/C technical logbook.

NOTE: If the ECAM warning PRIM 1(2)(3) PITCH FAULT related to the class 1 maintenance message F/CTL PRIM 1 PITCH FAULT EFCS 1(2) PITCH TRIM ACTR 1 was shown; the inspection of the ball screw assembly for integrity of the primary and secondary load paths must be done (Ref. TASK 27-44-51-210-805).

G7508471 - G3NT1T0 - FM27B100000001

A330 Circuit Breakers shown as example.

Remove the tags and close the Circuit Breakers:

PANEL	DESIGNATION	FIN	LOCATION
FOR 9CS1			
	742VU FCSC 1 NORM	10CE1	C67
FOR 10CS1			
	721VU FCPC3 STBY COM	7CE6	R20
	721VU FCPC3 STBY MON	7CE5	R19
	722VU FCPC 3	7CE3	V42
	722VU FCPC 3	7CE4	V38
FOR 9CS2			
	722VU FCSC 2	10CE2	T37
	742VU FCSC2 STBY SPLY	41CE	D66
FOR 10CS2			
	721VU FCPC3 STBY COM	7CE6	R20
	721VU FCPC3 STBY MON	7CE5	R19
	722VU FCPC 3	7CE3	V42
	722VU FCPC 3	7CE4	V38

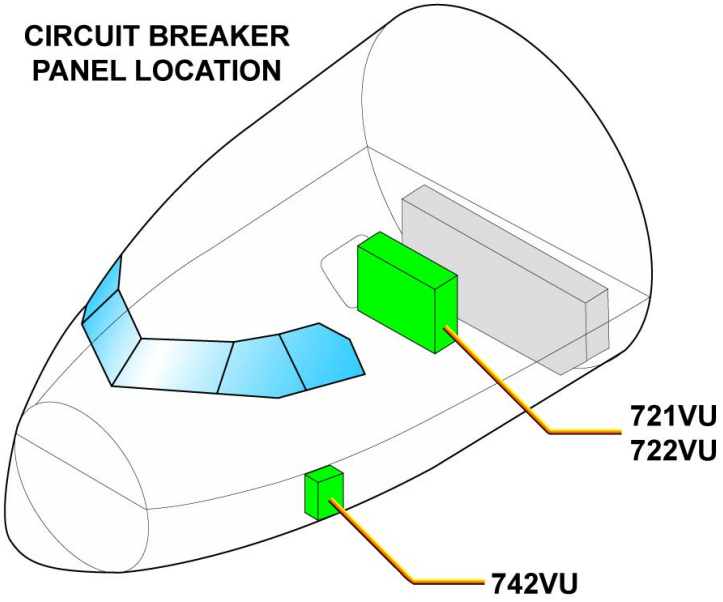

Remove the tags and close the C/Bs:

PANEL	DESIGNATION	FIN	LOCATION
721VU	HYD PUMP G CTL	9JV	U09
721VU	HYD PUMP B ENG 1	11JB	U08
721VU	HYD PUMP B CTL	9JC	X12
722VU	HYD PUMP Y SVCE	10JJ	N46
722VU	HYD PUMP Y CTL	9JJ	R36
722VU	HYD PUMP Y ENG 2	12JY	T46
722VU	HYD PUMP G ENG 2	14JG1	X45
722VU	HYD PUMP G ENG 1	14JG2	E67

The Circuit Breakers 7CE3 and 7CE4 have to be closed at the same time.

If this operation is not done correctly, the FAULT legend of the PRIM 3 P/BSW comes on (only with the P/BSW pushed). In this case, replay the opening and closing of both Circuit Breakers.

MEL/DEACTIVATION - DEACTIVATION OF THE THS ACTUATOR ELECTRICAL MOTOR

Make sure that hydraulic systems are depressurized.

A330 Circuit Breakers shown as example.

Open, safety and tag this(these) circuit breaker(s):

PANEL	DESIGNATION	FIN	LOCATION
721VU	HYD PUMP G CTL	9JV	U09
721VU	HYD PUMP B ENG 1	11JB	U08
721VU	HYD PUMP B CTL	9JC	X12
722VU	HYD PUMP Y SVCE	10JJ	N46
722VU	HYD PUMP Y CTL	9JJ	R36
722VU	HYD PUMP Y ENG 2	12JY	T46
722VU	HYD PUMP G ENG 2	14JG1	X45
722VU	HYD PUMP G ENG 1	14JG2	E67

Make sure that PRIM 1, PRIM 2, PRIM 3, SEC 1, SEC2 press in ON position.

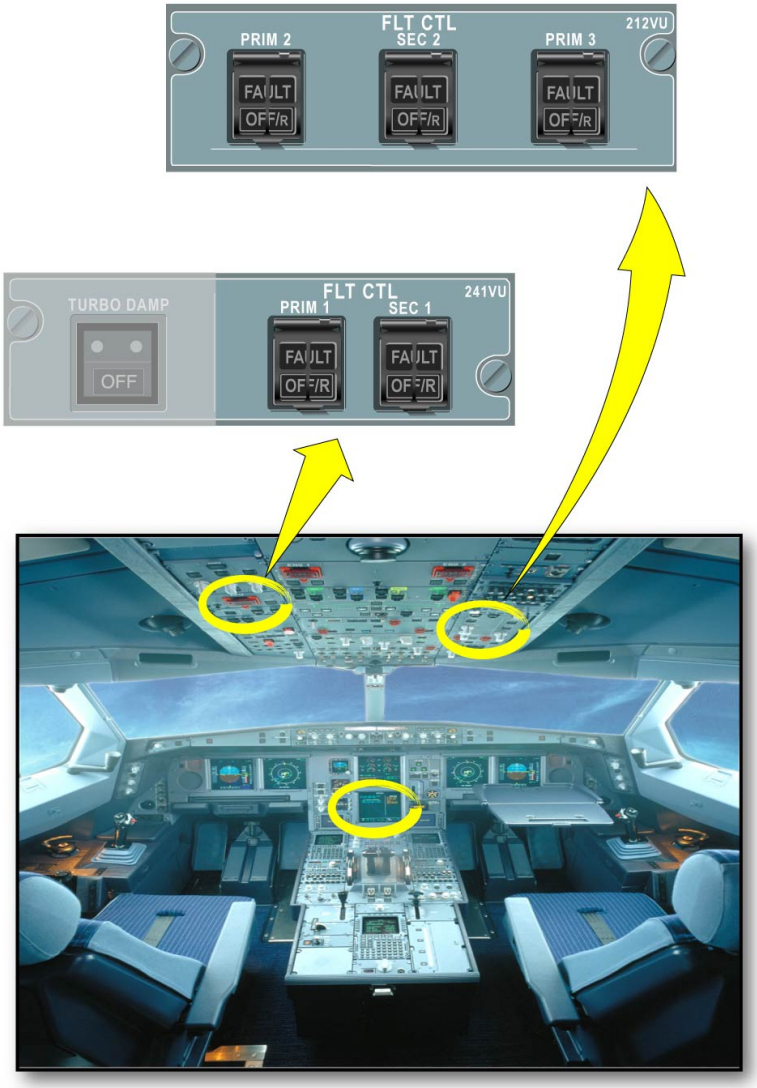

MEL/DEACTIVATION - DEACTIVATION OF THE THS ACTUATOR ELECTRICAL MOTOR

Open and tag the Circuit Breakers:

PANEL DESIGNATION	FIN	LOCATION
For the THS Actuator Motor 1		
742VU THS ACTR MOT 1	5CS1	L77
For the THS Actuator Motor 2		
721VU THS ACTR MOT2 STBY	34CS	W14
722VU THS ACTR MOT2 NORM	5CS2	V43
For the THS Actuator Motor 3		
722VU THS ACTR MOT 3	5CS3	V44

Open only the circuit breakers of the THS actuator motor to deactivate it.

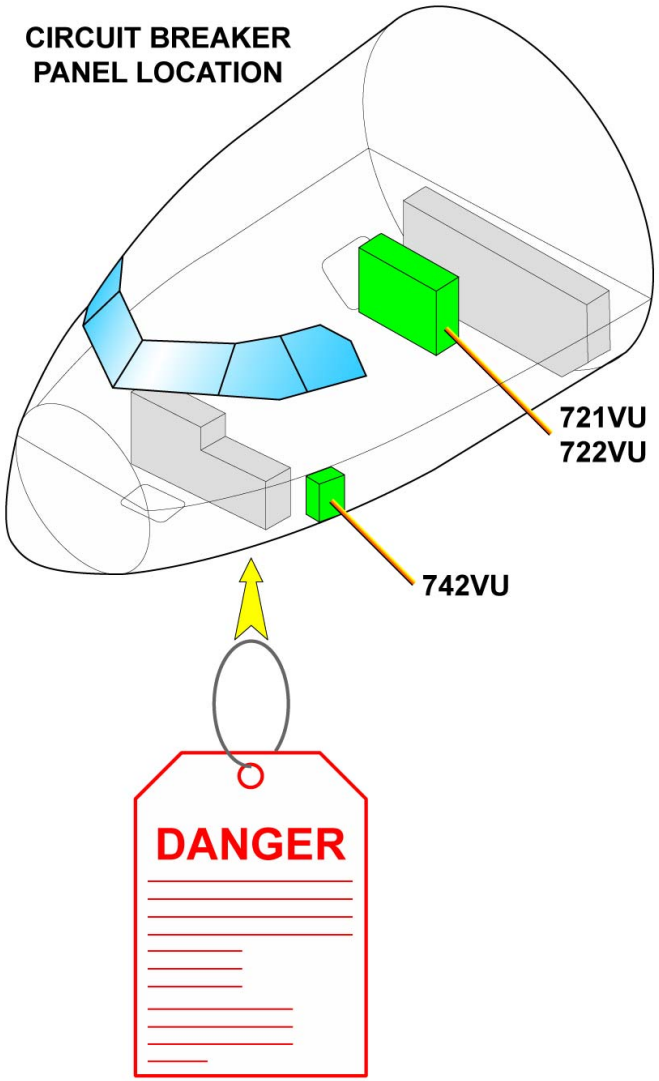

MEL/DEACTIVATION - DEACTIVATION OF THE THS ACTUATOR ELECTRICAL MOTOR

G7508471 - G3NT1T0 - FM27B1000000001

Pressurize the hydraulic systems.

Remove the tags and close the C/Bs:

PANEL	DESIGNATION	FIN	LOCATION
721VU	HYD PUMP G CTL	9JV	U09
721VU	HYD PUMP B ENG 1	11JB	U08
721VU	HYD PUMP B CTL	9JC	X12
722VU	HYD PUMP Y SVCE	10JJ	N46
722VU	HYD PUMP Y CTL	9JJ	R36
722VU	HYD PUMP Y ENG 2	12JY	T46
722VU	HYD PUMP G ENG 2	14JG1	X45
722VU	HYD PUMP G ENG 1	14JG2	E67

A330 Circuit Breakers shown as example.

Select the F/CTL page and check the warning on the EWD.

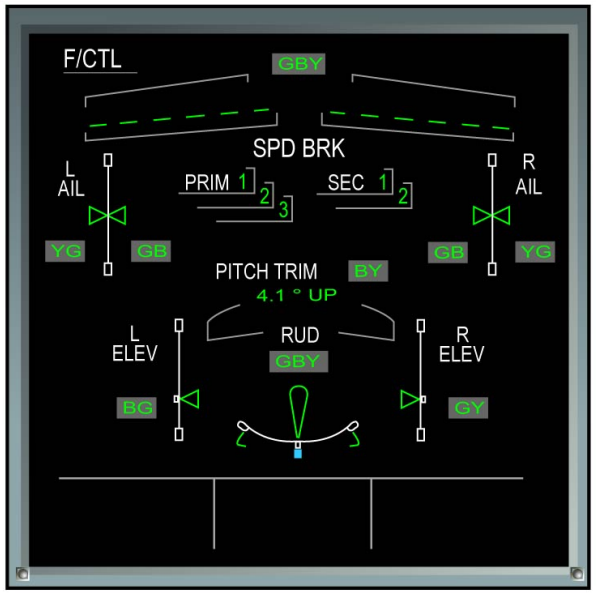

ECAM CONTROL PANEL (ECP)(100VU)

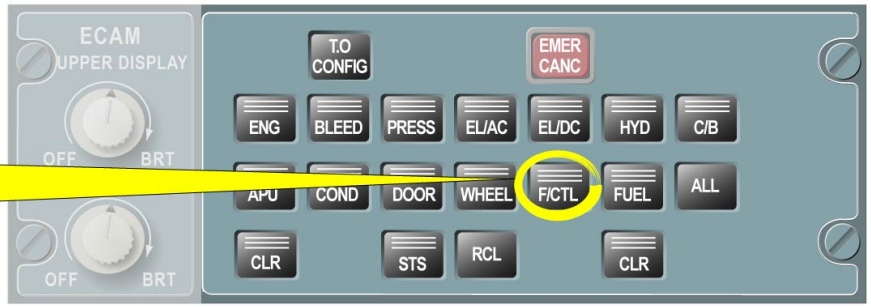

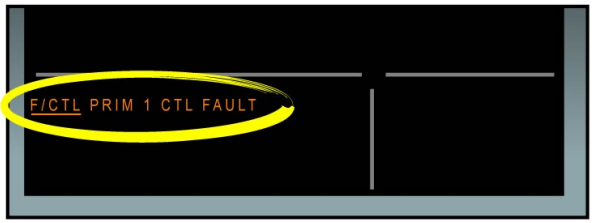

ECAM EWD

MEL/DEACTIVATION - DEACTIVATION OF THE THS ACTUATOR ELECTRICAL MOTOR

G7508471 - G3NT1T0 - FM27B1000000001

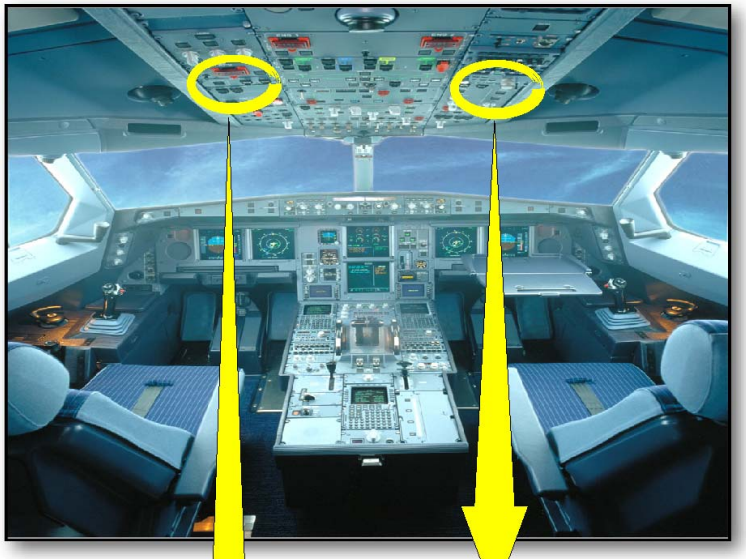

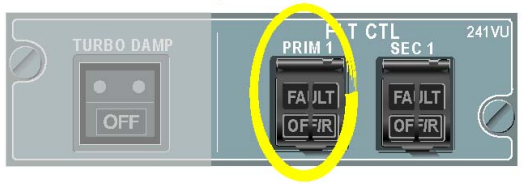

Release out the PRIM 1, PRIM 2, PRIM 3, P/BSWs.

Move the pitch trim control wheels to the fully UP position.

Push the PRIM 1 and check that the pitch trim do not move.

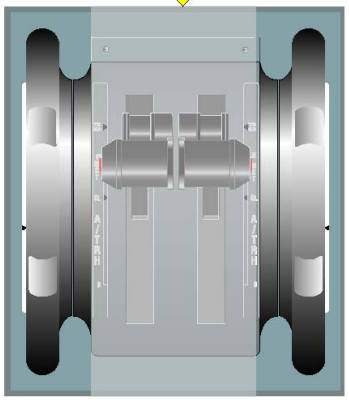

PITCH TRIM CONTROL WHEELS

A330 trim wheel as an example.

MEL/DEACTIVATION - DEACTIVATION OF THE THS ACTUATOR ELECTRICAL MOTOR

G7508471 - G3NT1T0 - FM27B1000000001

Check that the F/CTL STAB FAULT message appears.

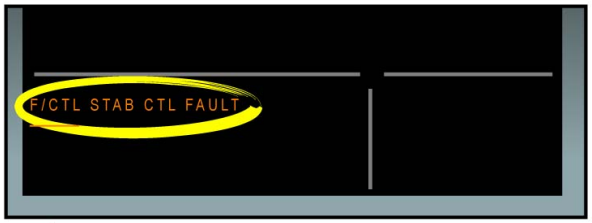

Do the BITE test of the EFCS (GND SCANNING)

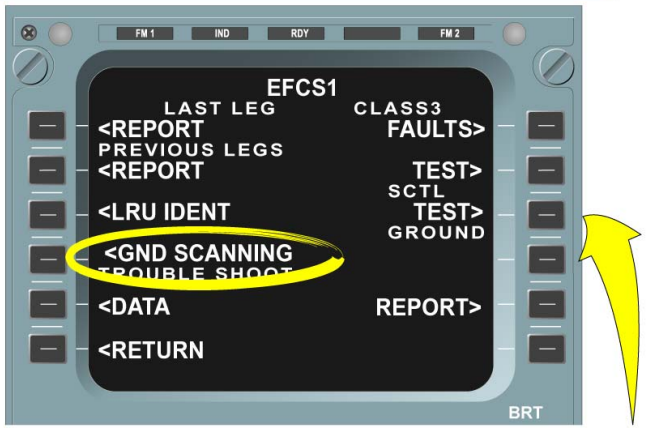

MCDU MESSAGE

- FCPC 1(2CE1)/WRG/THS ACTR CIRCUIT BREAKER TO FCPC1, when the circuit breaker for THS actuator motor 1 is open,
- THS ELEK MDL(1CS)/FCPC2 (2CE2)/RLY(6CS2/23CS2), when the circuit breakers for THS actuactor motor 2 are open,
- THS ELEK MDL(1CS)/FCPC3 (2CE3)/RLY(6CS3), when the circuit breaker for THS actuator motor 3 are open.

Push the PRIM 2 and 3 and check that the pitch trim control wheels automatically move to the 4° position.

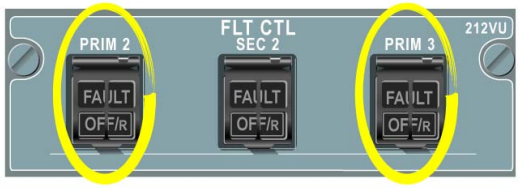

Trim wheels return to 4 degrees up position.

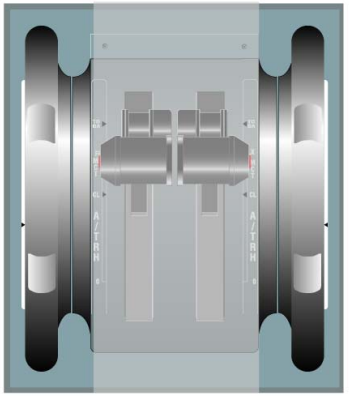

PITCH TRIM CONTROL WHEELS

MEL/DEACTIVATION - DEACTIVATION OF THE THS ACTUATOR ELECTRICAL MOTOR

Depressurize the hydraulics systems.

MEL/DEACTIVATION - DEACTIVATION OF THE THS ACTUATOR ELECTRICAL MOTOR

G7508471 - G3NT1T0 - FM27B1000000001

FLIGHT CONTROLS LINE MAINTENANCE BRIEFING (2)

MAINTENANCE TIPS

EXTENSION OF THE SPOILERS FOR MAINTENANCE

To get access to the spoiler actuators, extend the flaps and secure the selector with the locking tool. If the flaps cannot be extended access is done by removing the applicable access panel. Place warning notices in the cockpit to prevent flight control operation.
To extend the spoilers for maintenance, install the spoiler maintenance key in the maintenance device and turn it in the "M" position.
Move the spoiler to the extended position with your hand and secure it with the safety collar-spoiler. If no other servicing tasks have to be completed the area can be closed.

NOTE: The spoiler can move on its own with its weight.

G7508471 - G3NT1T0 - FM27B1000000001

Extension of the flaps on the ground.

Install a warning notice in the cockpit.

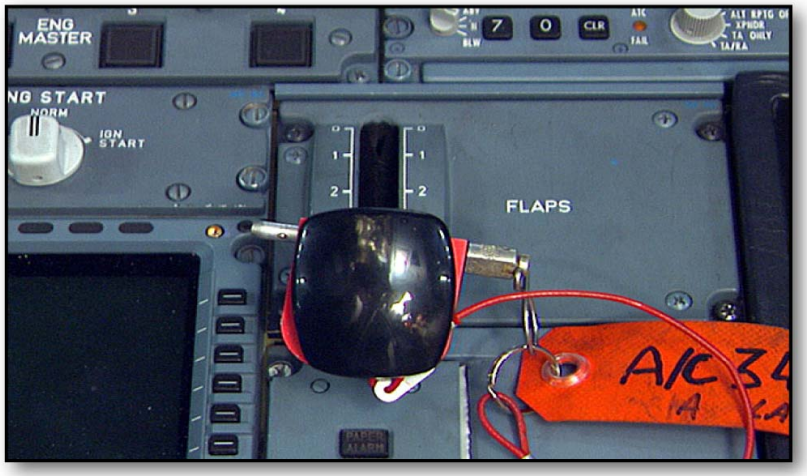

MAINTENANCE TIPS - EXTENSION OF THE SPOILERS FOR MAINTENANCE

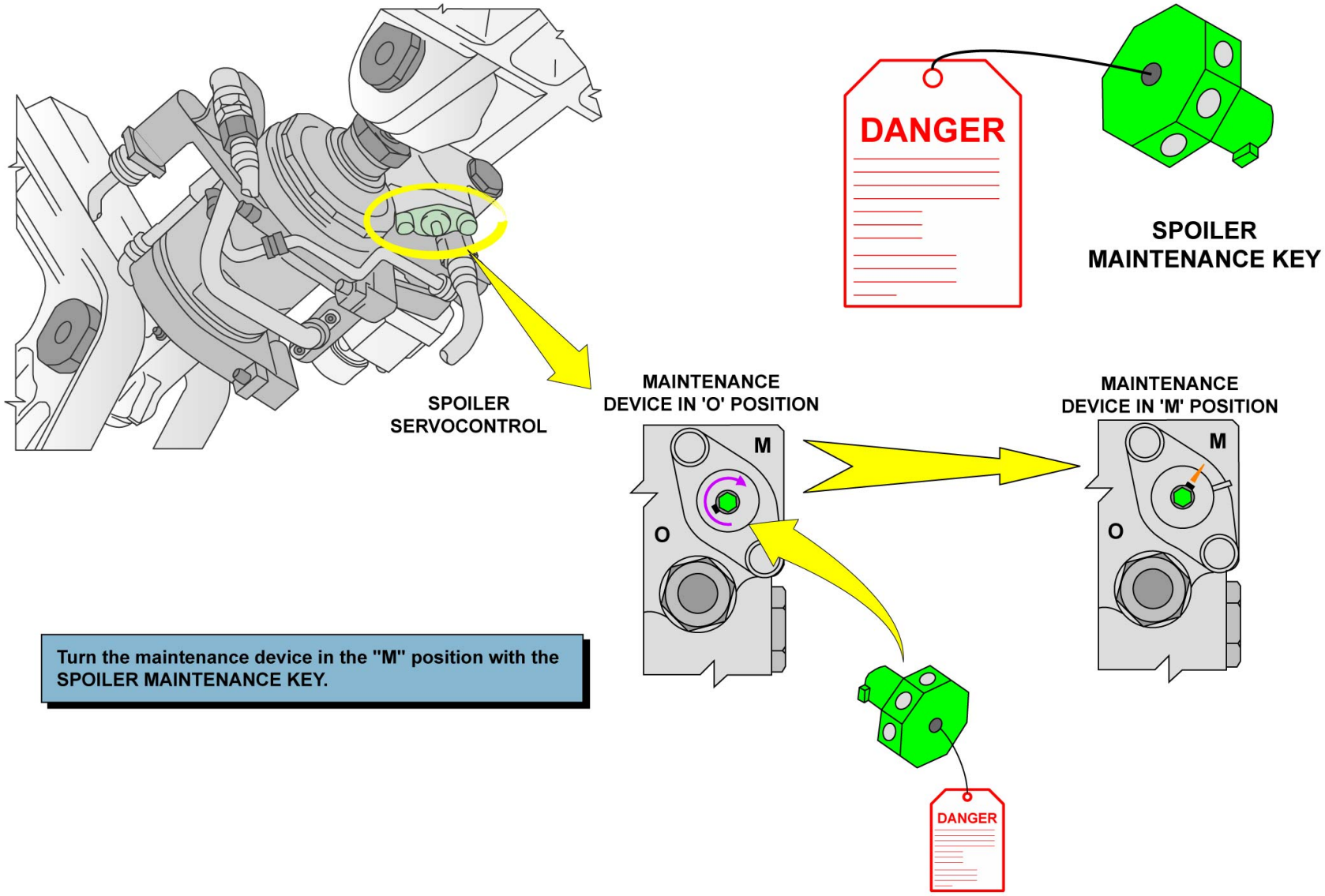

Turn the maintenance device in the "M" position with the SPOILER MAINTENANCE KEY.

MAINTENANCE TIPS - EXTENSION OF THE SPOILERS FOR MAINTENANCE

G7508471 - G3NT1T0 - FM27B1000000001

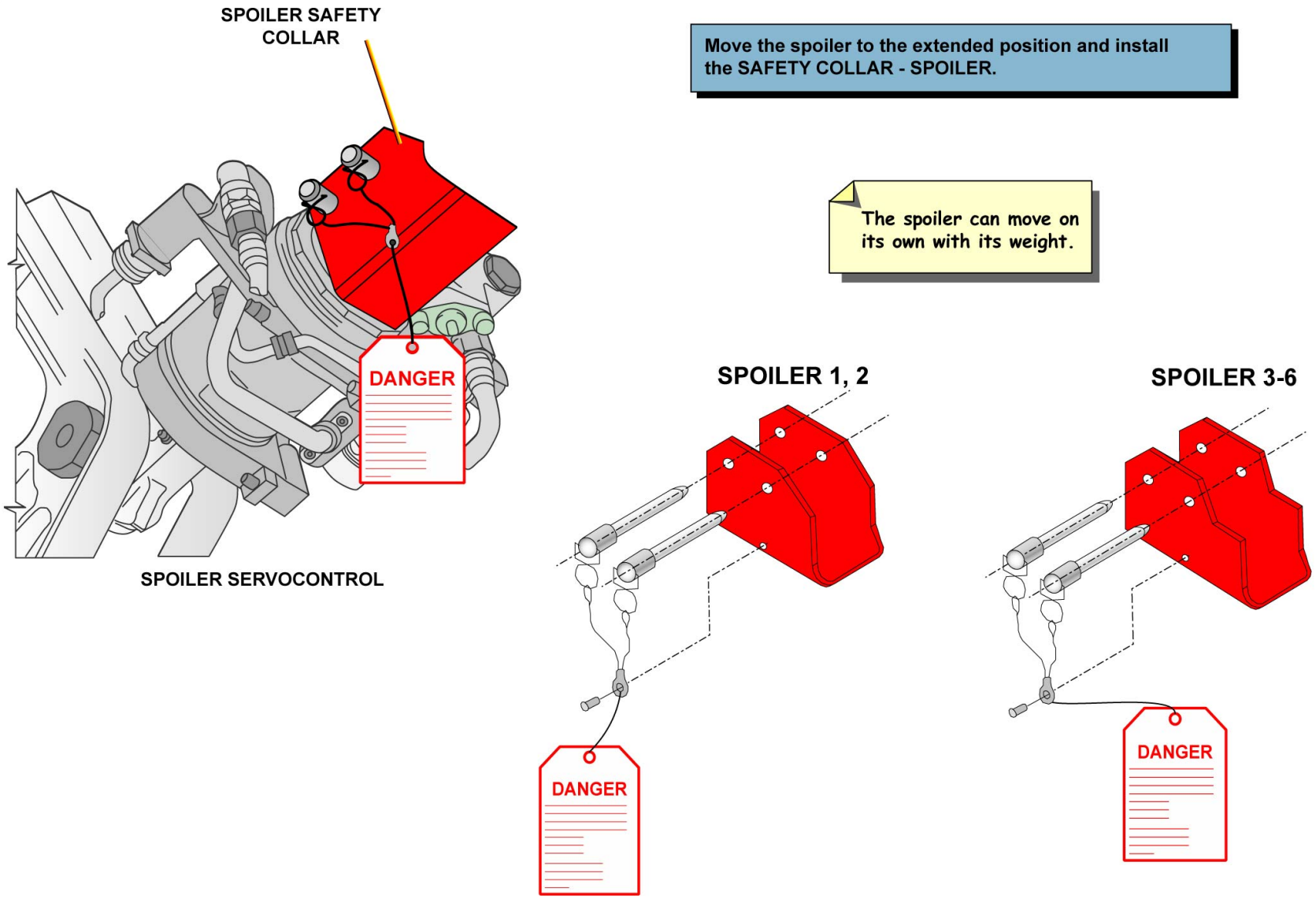

MAINTENANCE TIPS - EXTENSION OF THE SPOILERS FOR MAINTENANCE

SIDE STICK D/O (3)

GENERAL

The main function of the side sticks is to transmit to the Electrical Flight Control System (EFCS) the lateral and longitudinal manual control orders in the form of electrical signals, depending on the position of the hand grip. It also generate the related artificial feel loads using spring rods, springs and dampers.
In autopilot mode, a solenoid is energized in order to keep the side sticks in the neutral position. By doing this, the solenoid provides a higher load level in order to prevent any unwanted switching to the manual control mode, while keeping the possibility to override the autopilot if required.
A thermoformed polycarbonate casing houses the mechanical assembly to prevent the penetration of foreign matter, which could jam the moving parts.
Two identical transducer units are associated to each computer, one for roll control, another one for pitch control. A transducer unit comprises sets of potentiometers driven by a duplicate mechanism and connected to the EFCS computers via connectors. Ring pins can be installed for adjustment

WARNING: During handling, make sure that the side stick assembly stays in vertical position. There is a risk of skydrol leakage from dampers.

G7508471 - G3NT1T0 - FM27DB000000001

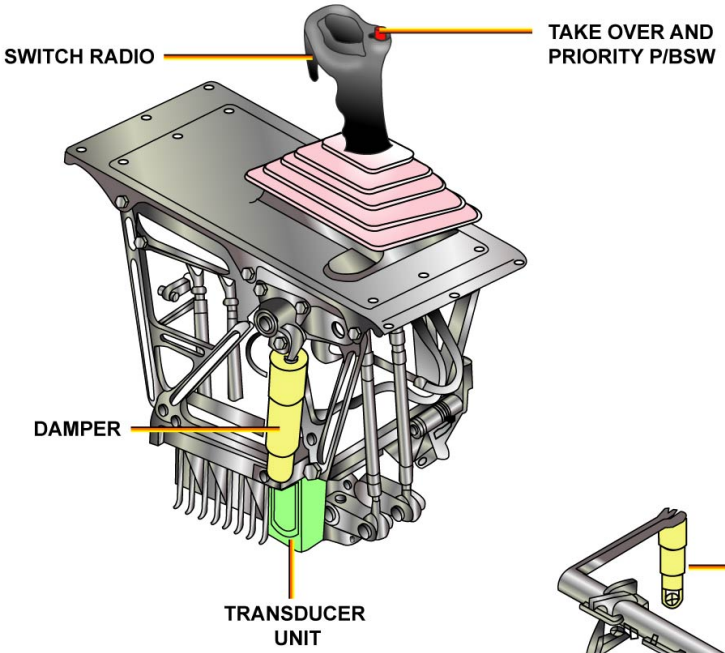
SWITCH RADIO
TAKE OVER AND
PRIORITY P/BSW
DAMPER
TRANSDUCER
UNIT

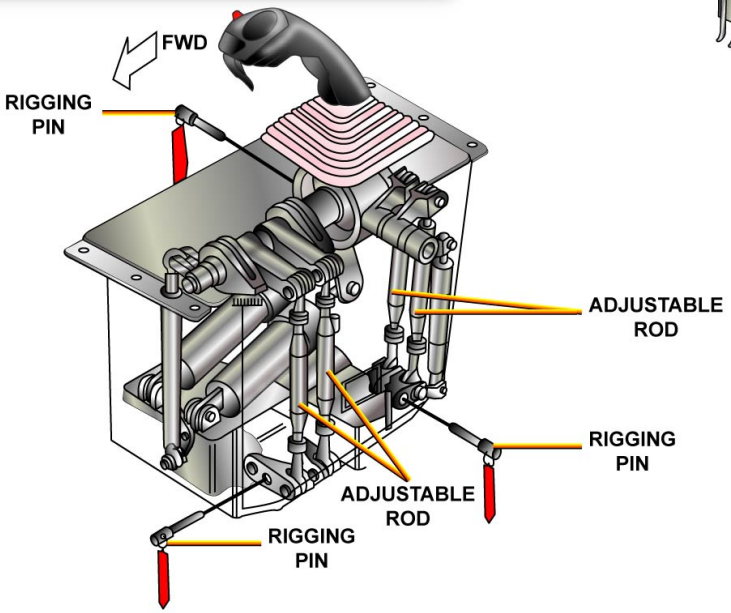
FWD
RIGGING
PIN
ADJUSTABLE
ROD
RIGGING
PIN
ADJUSTABLE
ROD
RIGGING
PIN

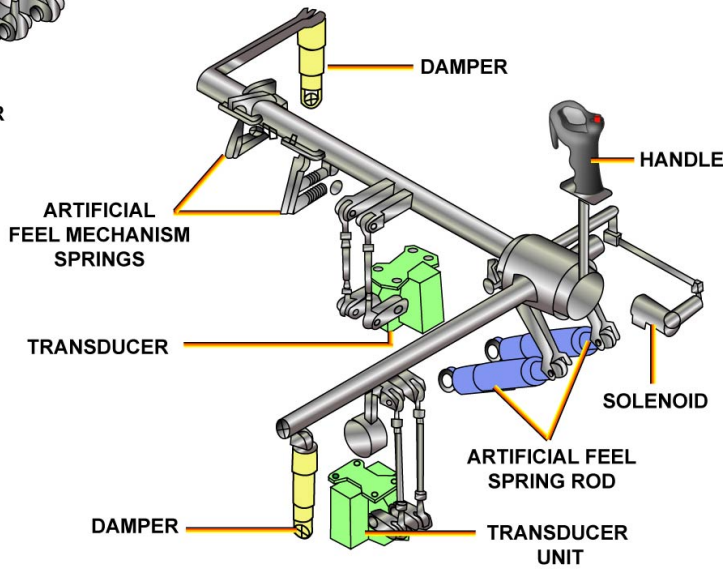
DAMPER
HANDLE
ARTIFICIAL
FEEL MECHANISM
SPRINGS
TRANSDUCER
SOLENOID
ARTIFICIAL FEEL
SPRING ROD
DAMPER
TRANSDUCER
UNIT

GENERAL

SIDE STICK D/O (3)

SIDESTICK AND PRIORITY LOGIC

Sidesticks, one on each lateral console, are used for manual pitch and roll control. They are springloaded to neutral. When the autopilot is engaged, a solenoid-operated detent locks both sidesticks in the neutral position. If the pilot applies a force above a given threshold (5daN in pitch, 3.5 daN in roll), the autopilot disengages and the sidestick unlocks and sends an input to the computers. The hand grip includes 2 P/Bs: An autopilot disconnect/sidestick priority P/B and a push-to-talk button. Sidestick priority logic: When only one pilot operates the sidestick, his demand is sent to the computers. When the other pilot operates his sidestick, in the same or opposite direction, both pilot inputs are algebraically added. The addition is limited to single-stick maximum deflection.

NOTE: In the event of simultaneous inputs on both sidesticks (2° deflection off the neutral position in any direction), the two green SIDE STICK PRIORITY lights, on the glareshield, come on and the "DUAL INPUT" voice message activates.

A pilot can deactivate the other sidestick, and take full control by pressing and keeping pressed his takeover P/B. For latching the priority condition, it is recommended that the takeover P/B be pressed for more than 40 seconds. The takeover pushbutton can then be released without losing priority. However, a deactivated sidestick can be reactivated at any time, by momentarily pressing either takeover P/B. If both pilots press their takeover P/Bs, the last pilot to press their P/B will have priority.

NOTE: If an autopilot is engaged, any action on a takeover P/B will disengage it.

In a priority situation, a red light will come on, in front of the pilot whose sidestick is deactivated. A green light will come on, in front of the pilot who has taken control, if the other sidestick is not in the neutral position (to indicate a potential and unwanted control demand).

NOTE: If one stick is deactivated on ground, at takeoff thrust application, the takeoff «CONFIG» warning is triggered.

G7508471 - G3NT1T0 - FM27DB000000001

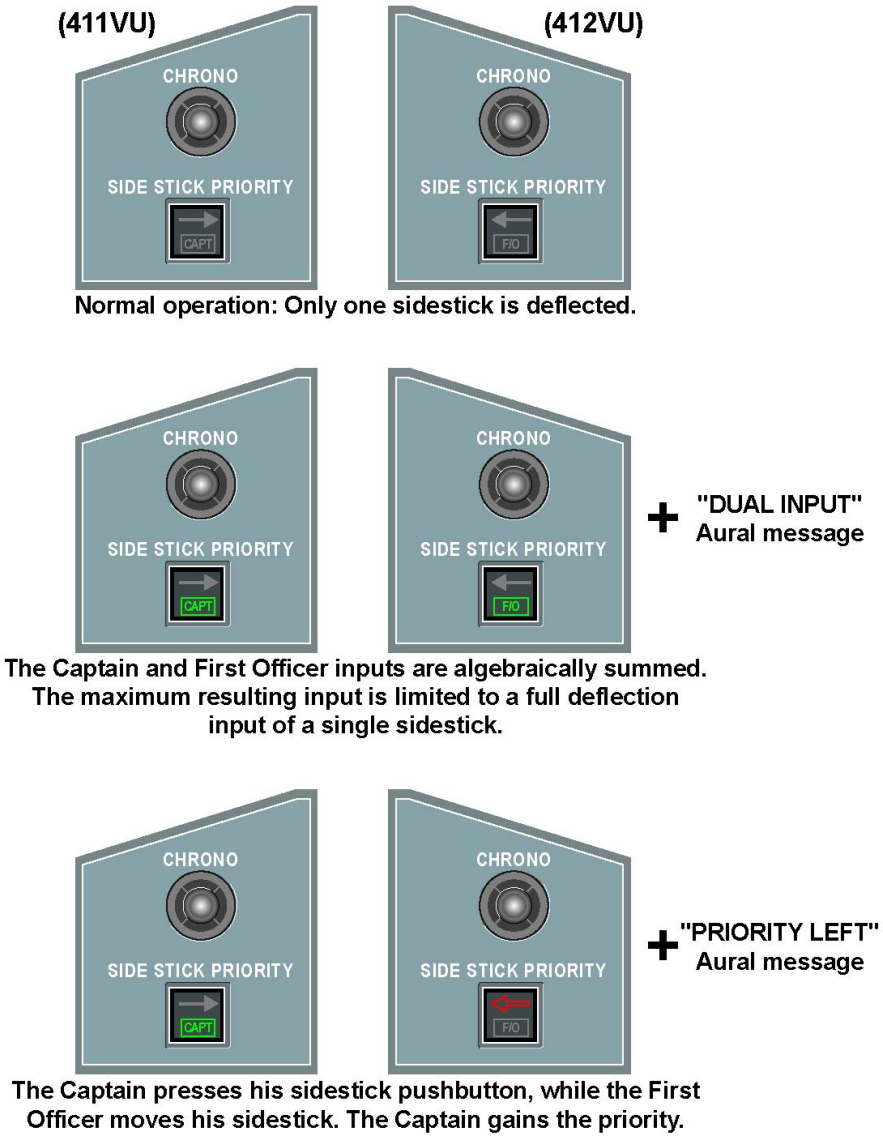

SIDESTICK AND PRIORITY LOGIC

ROLL D/O (3)

GENERAL

The ailerons in conjunction with the roll spoilers (spoilers2 to 6) do the aircraft roll control.
The rudder (Yaw control) carries out automatically the turn coordination and the dutch roll damping.
In MANUAL CONTROL MODE:
the side stick roll transducers send roll inputs to the Flight Control Primary Computers (FCPCs) and Flight Control Secondary Computer (FCSCs).
In AUTOPILOT CONTROL MODE:
the Flight Management Guidance and Envelope Computers (FMGECs) send guidance orders to the FCPCs only.
When Autopilot (AP) is engaged the side sticks are locked by solenoid operated load threshold device. If a pilot overrides such a force threshold, he will cause the AP disengagement.
The master computer (normally FCPC1 computation part) calculates the roll deflection orders.
and sends it to all the FCPCs and FCSCs (execution part). These computers achieve the servoing of aileron and roll spoiler servocontrols.
The Flight Control Computers need signals from the Air Data/Inertial Reference Units (ADIRUs) to establish the aircraft response (roll attitude, roll rate...),
AT HIGH SPEED (Vc higher than 190 kts), in clean configuration (slats/flaps retracted) the outboard ailerons are servoed to zero.
In autopilot mode and in some failure cases, the outboard ailerons are used up to 300 kts.
AILERONS DROOP:
This function is used to deflect symmetrically the ailerons downwards when the flaps are extended.

AILERONS-PRESENTATION

Each aileron is actuated by two interchangeable electro-hydraulic servocontrols powered by different hydraulic systems.
The servocontrols on the inboard aileron and the servocontrols on the outboard aileron are not interchangeable.

AILERONS-NORMAL OPERATION

Each servocontrol is connected to:
- 2 computers for the inboard aileron (1 FCPC and 1FCSC),
- 1 computer for the outboard aileron (1 FCPC or 1 FCSC),
for servoloop and to satisfy the servoloop reconfiguration order shown by the reconfiguration arrows.
The aileron servocontrols have two control modes, active and damping.
In normal configuration, the outer servocontrol of each aileron is in active mode, the inner servo control is in damping mode.

AILERONS-ABNORMAL OPERATIONS

HYDRAULIC OR ELECTRIC FAILURE:
- if a servocontrol in active mode is not hydraulically powered or not electrically controlled anymore, the faulty servocontrol falls in the damping mode and the adjacent one becomes active.
- if both servocontrols of an aileron are faulty, both servocontrols are in damping mode which prevents the appearance of flutter.

AILERONS/SPOILERS-SPECIAL CASES

. When the Ram Air Turbine (RAT) is extended, the outboard ailerons are not used, the related servocontrols are switched to the damping mode in order to minimize the hydraulic consumption.
On ground, with hydraulic systems depressurized, it is acceptable to see the ailerons droop due to their weight.
MLA MANEUVER LOAD ALLEVIATION:

G7508471 - G3NT1T0 - FM27D300000003

The function of the MLA is to redistribute the lift over the wing to relieve structural loads on the outer wing surfaces and so reducing the bending moment of the wing. The MLA function raises symmetrically the ailerons and the spoilers 4,5,and 6.The deflection is proportional to load factor in excess of 2 g.
An elevator demand is simultaneously applied to compensate the pitching moment induced by the spoilers and the ailerons.

ROLL SPOILERS-GENERAL

Each spoiler is actuated by an electro-hydraulic servocontrol. All the servocontrols are of the same size, but have different lengths of travel. The Spoiler servocontrol principles will be detailed later in the modules Primary Control Speed Brake and Lift Dumping.

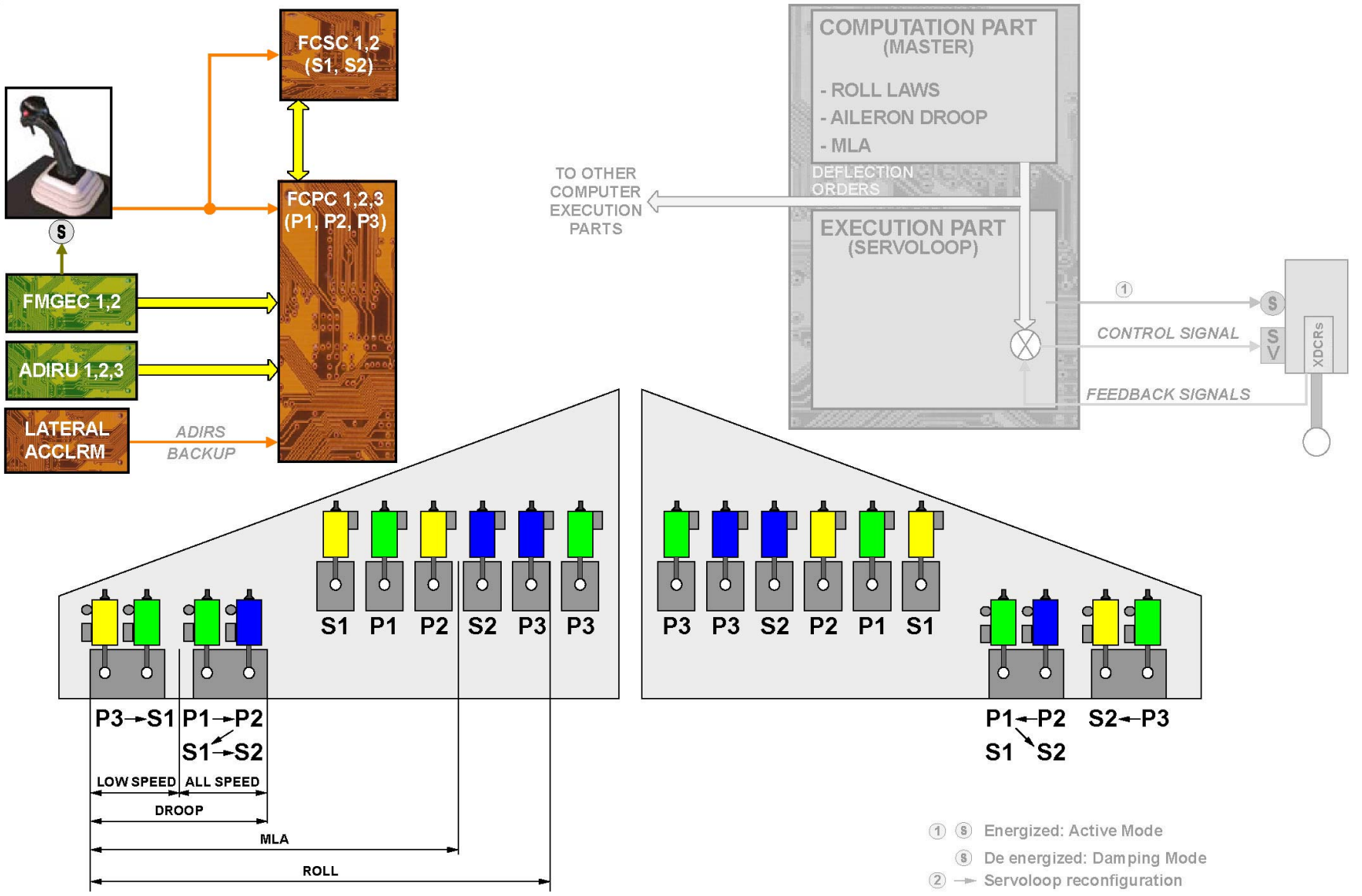

GENERAL ... ROLL SPOILERS-GENERAL

G7508471 - G3NT1T0 - FM27D300000003

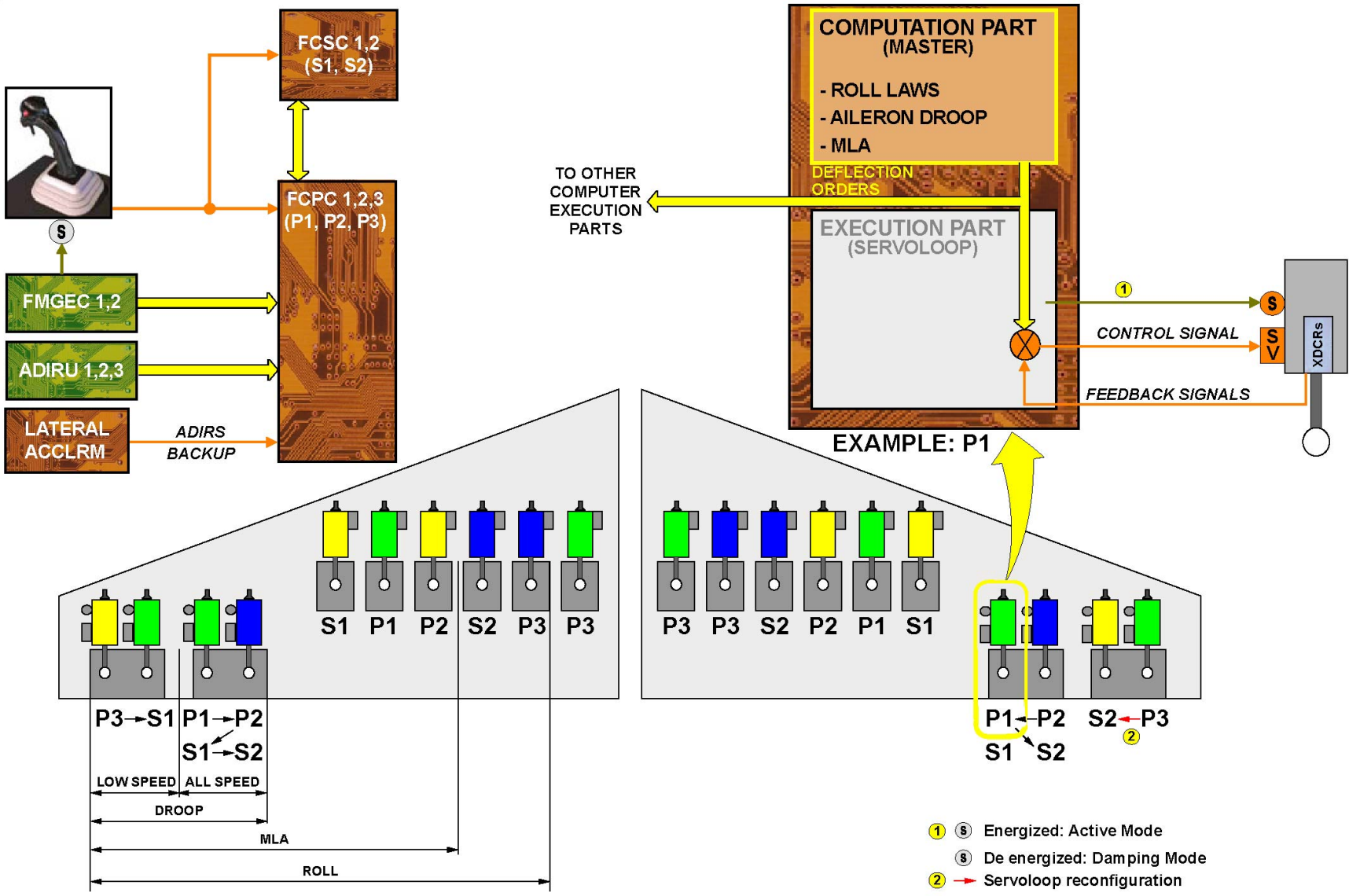

GENERAL ... ROLL SPOILERS-GENERAL

G7508471 - G3NT1T0 - FM27D300000003

ROLL D/O (3)

AILERON SERVO CONTROL PRINCIPLES

ACTIVE MODE

In the active mode, the aileron servo-control actuator is pressurized and the solenoid valve energized by the computer.

G7508471 - G3NT1T0 - FM27D300000003

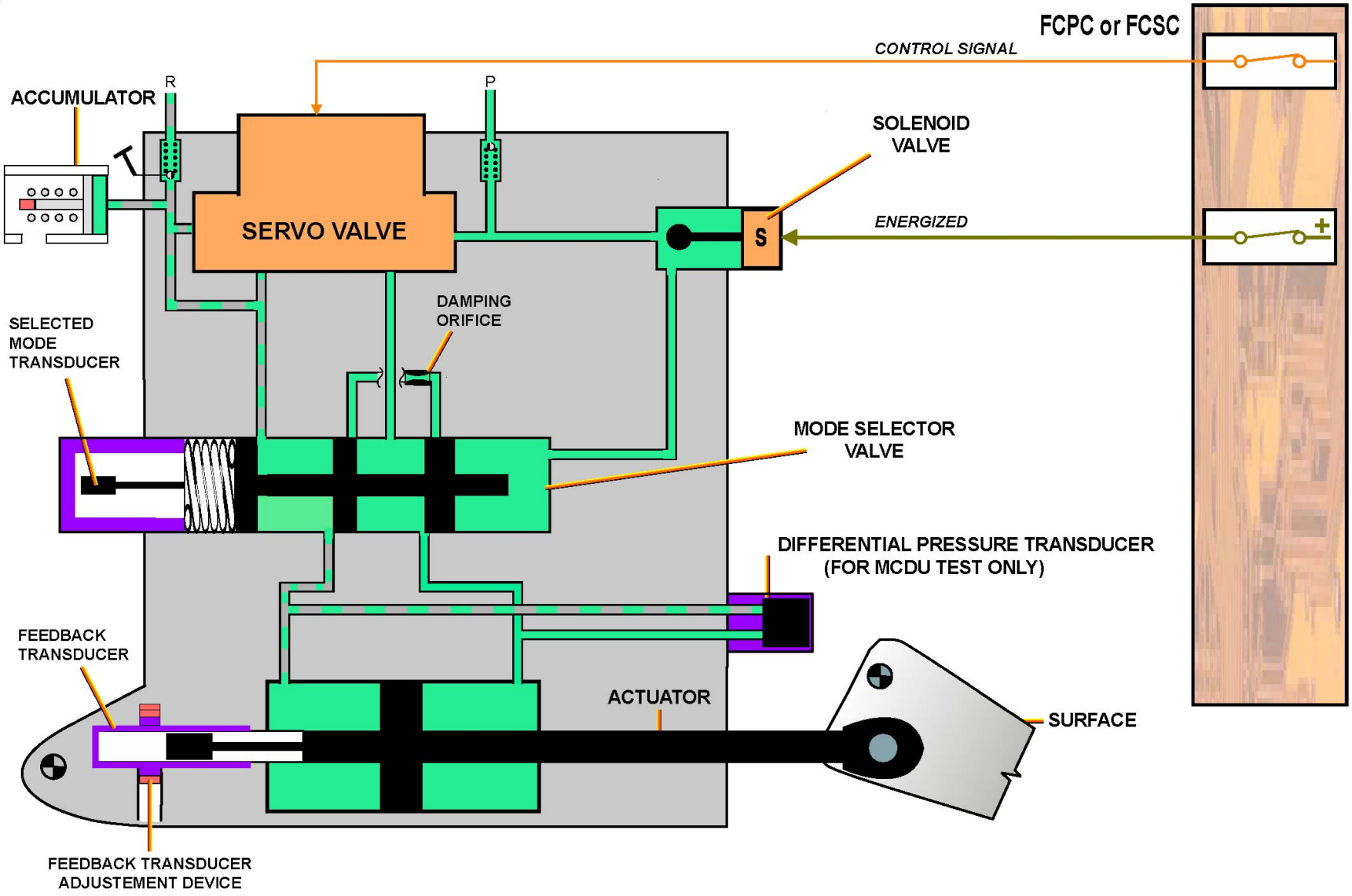

AILERON SERVO CONTROL PRINCIPLES - ACTIVE MODE

G7508471 - G3NT1T0 - FM27D300000003

ROLL D/O (3)

AILERON SERVO CONTROL PRINCIPLES (continued)

DAMPING MODE

If the solenoid valve is de-energized or the servo-control actuator is not pressurized, the servo control actuator is in damping mode. In damping mode, the actuator follows the control surface movements.

G7508471 - G3NT1T0 - FM27D300000003

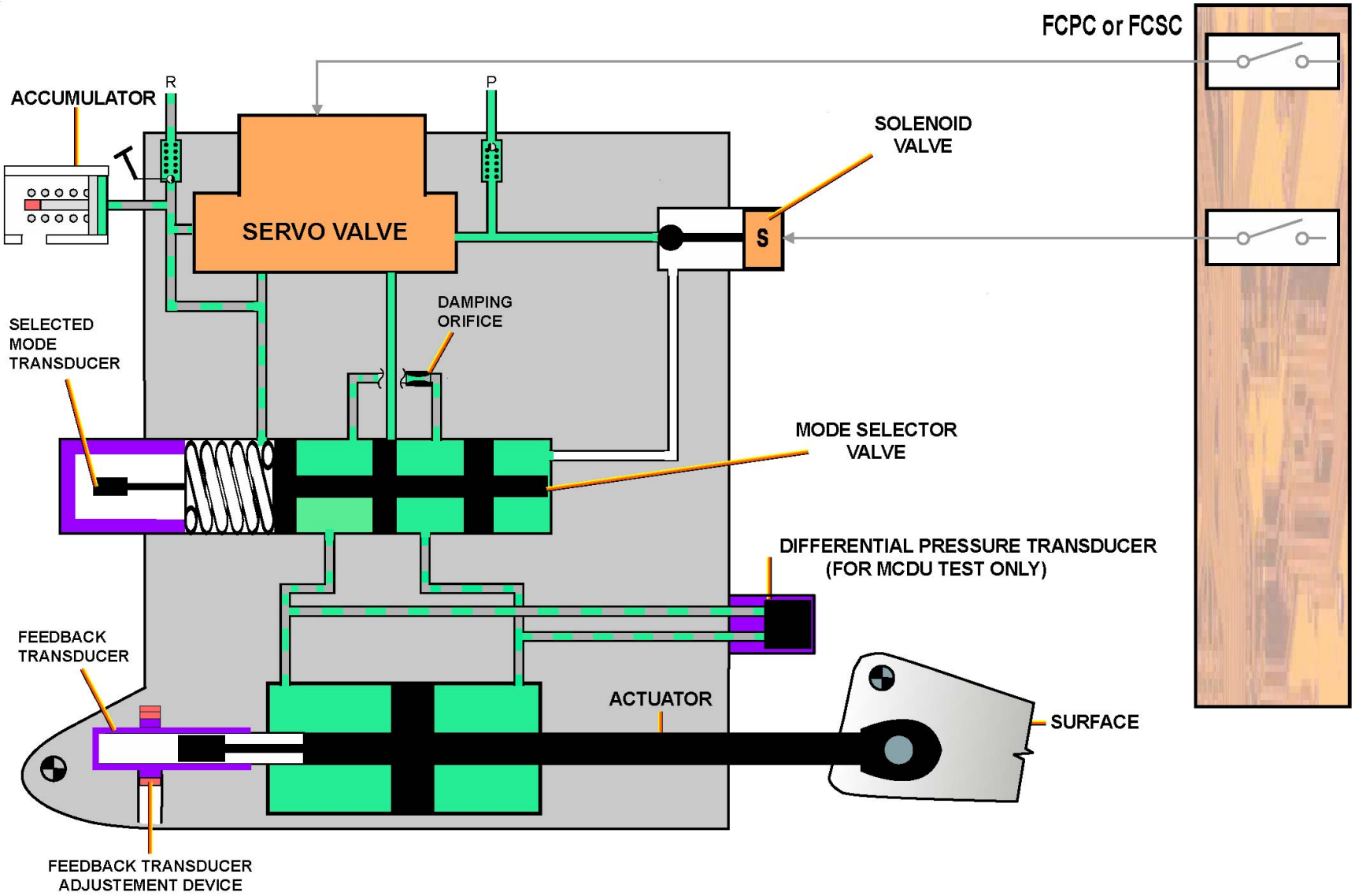

AILERON SERVO CONTROL PRINCIPLES - DAMPING MODE

G7508471 - G3NT1T0 - FM27D300000003

ROLL D/O (3)

AILERON SERVO CONTROL PRINCIPLES (continued)

TEST/ADJUSTMENT

The servo control design enables the test of the accumulator and internal valves using the accumulator sight indicator and a test finger.
The test finger is manually operated by using an hexagon socket wrench.
The adjustment is possible by acting on the position feedback device.

G7508471 - G3NT1T0 - FM27D300000003

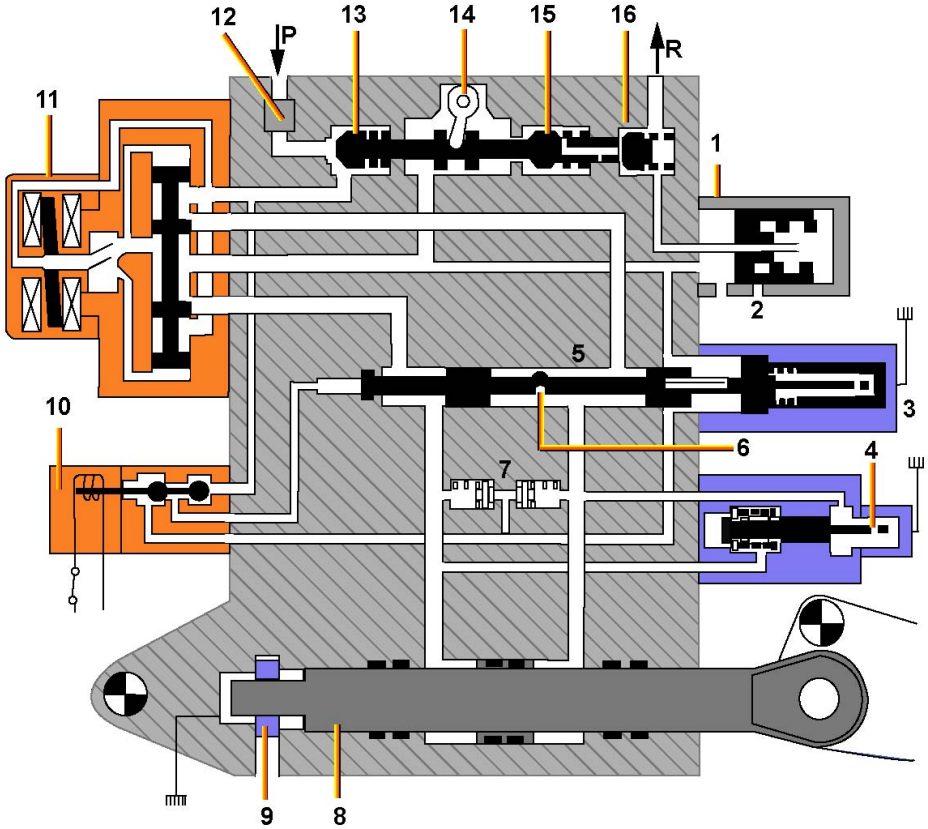

1 ACCUMULATOR
2 ACCUMULATOR SIGHT INDICATOR
3 MODE SELECTOR VALVE POSITION TRANSDUCER
4 DIFFERENTIAL PRESSURE TRANSDUCER
5 MODE SELECTOR VALVE
6 DAMPING RESTRICTION
7 ANTICAVITATION VALVES
8 FEEDBACK TRANSDUCER
9 FEEDBACK TRANSDUCER ADJUSTEMENT DEVICE
10 SOLENOID VALVE
11 SERVO VALVE
12 FILTER
13 INLET ALOCKING VALVE
14 TEST FINGER
0 = ZERO
1 = LEAK CHECK
2 = DISCHARGE
15 RETURN BLOCKING VALVE
16 RETURN RELIEF VALVE

AILERON SERVO CONTROL PRINCIPLES - TEST/ADJUSTMENT

G7508471 - G3NT1T0 - FM27D300000003

PITCH D/O (ELEVATOR) (3)

GENERAL

The pitch control is achieved by two elevators and Trimmable Horizontal Stabilizer (THS). The elevators are used for short-term pitch control, the THS for long-term pitch control.
In MANUAL CONTROL MODE:
the pitch is controlled from the side stick pitch transducers which send electrical signals to the Flight Control Primary Computers (FCPCs) and Flight Control Secondary Computers (FCSCs).
In AUTOPILOT (AP) CONTROL MODE,
the Flight Management Guidance and Envelope Computers (FMGECs) send guidance orders to the FCPCs only.
When the AP is engaged, the side sticks are locked by a solenoid-operated load threshold device energized by the FMGECs.
The master computer (normally FCPC 1 computation part) calculates the elevators and the THS deflection orders and sends them to all the computer execution parts that achieve the servoing of the elevator servocontrols and THS actuator.
The Flight Control Computers also need signals from:
- Air Data Reference Units (ADIRUs) to establish the A/C response (pitch attitude, load factor, etc)
- two vertical accelerometers for turbulence damping function and in case of ADIRU failure.

ELEVATORS PRESENTATION

Each elevator is actuated by two interchangeable hydraulic servocontrols.
Each servocontrol has three operating modes:
active mode, damping mode and re-centering mode.

G7508471 - G3NT1T0 - FM27D200000003

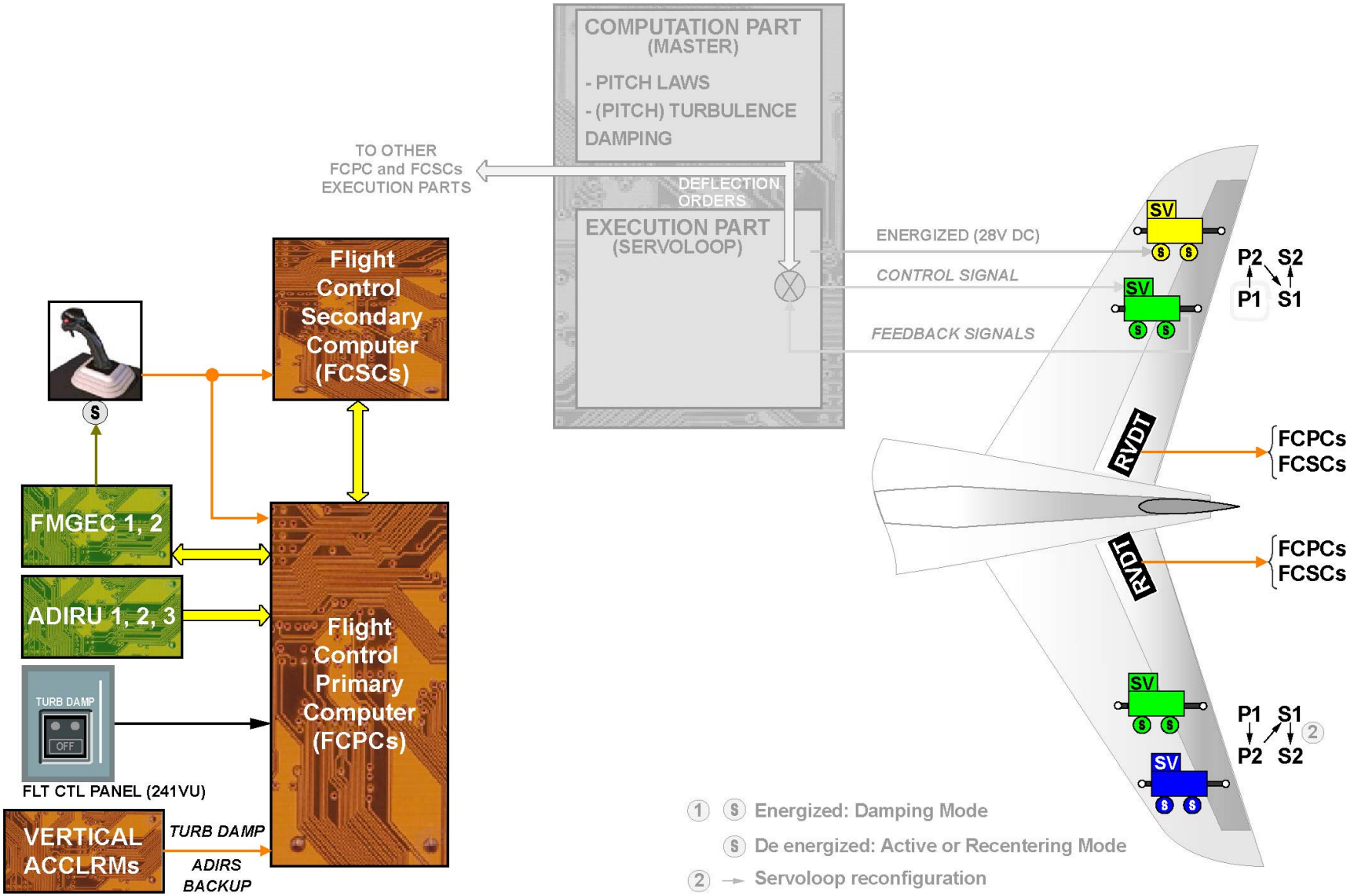

GENERAL & ELEVATORS PRESENTATION

G7508471 - G3NT1T0 - FM27D200000003

PITCH D/O (ELEVATOR) (3)

ELEVATORS NORMAL OPERATION

Each elevator servocontrol is connected to two computers (one FCPC and one FCSC).
In the normal configuration, the inboard servocontrol is in active mode while the outboard is in damping mode.
FCPC 1 having the servo-loop control priority:
- sets its dedicated servocontrol in active mode and ensures the servoloop control,
- commands the damping mode on the adjacent servocontrol (one solenoid valve (S) energized).
For the elevator servolooping computation the computers need to acquire:
- the elevator surface position,
- the elevator servocontrol piston position.
This information is sent by servocontrol transducers (XDCRs) units and the surface position transducer (RVDT).
In the event of large deflection demands, the two servo-controls can become active to avoid the saturation of one servocontrol.

ELEVATORS ABNORMAL OPERATIONS

HYDRAULIC OR ELECTRICAL FAILURE
If a servocontrol being in active mode is either not hydraulically powered or not electrically controlled anymore,
the faulty servocontrol falls in damping mode and the adjacent one becomes active according the servoloop reconfiguration.
If both servocontrols of one elevator are depressurized, both servocontrols are in damping mode which prevents fluttering.
When P1, P2, S1 and S2 are no longer able to control their dedicated servocontrol (ie: inputs missing, electrical failure, etc...), the servocontrols fall in re-centering mode.

G7508471 - G3NT1T0 - FM27D200000003

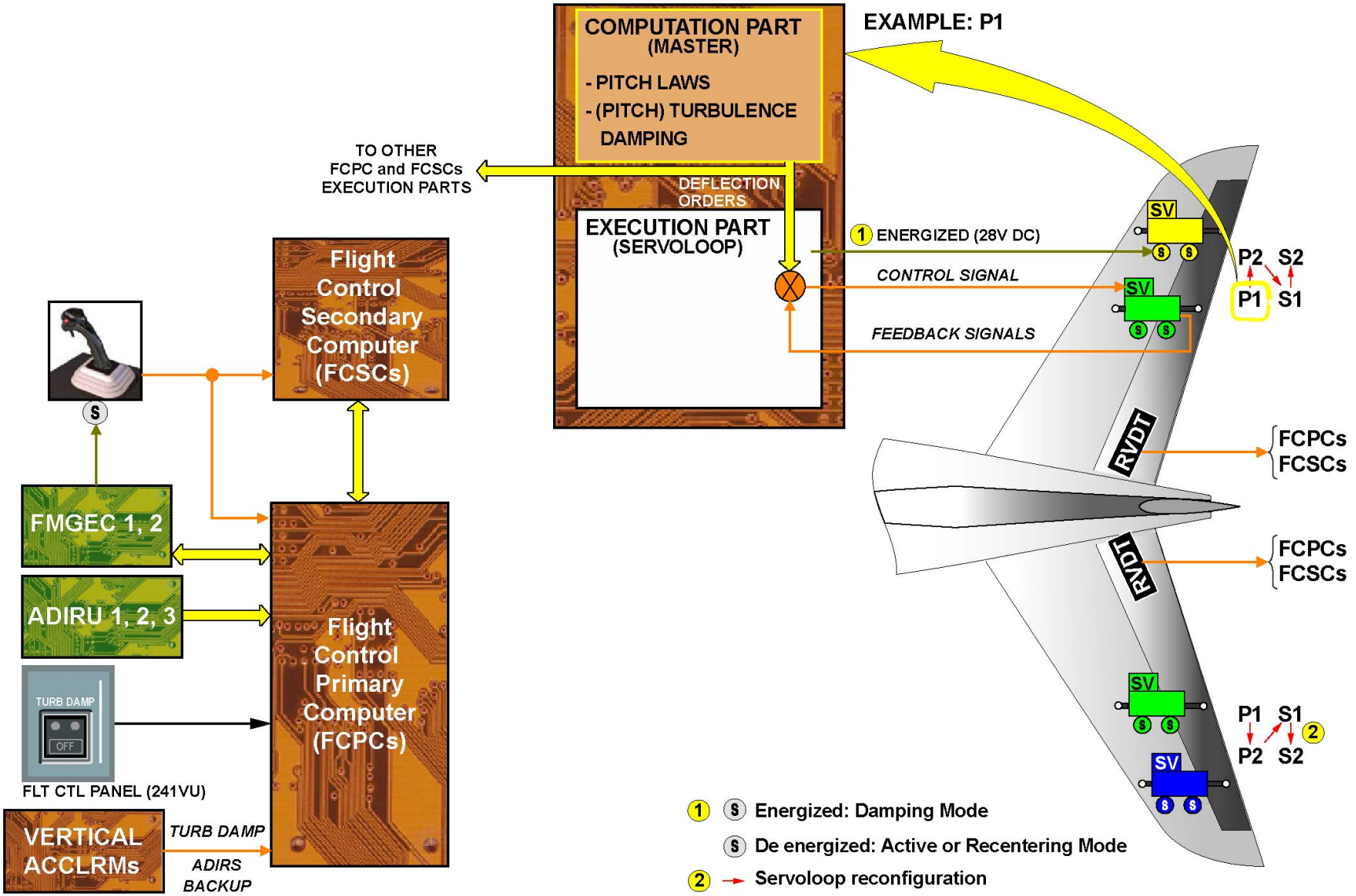

ELEVATORS NORMAL OPERATION & ELEVATORS ABNORMAL OPERATIONS

G7508471 - G3NT1T0 - FM27D200000003

PITCH D/O (ELEVATOR) (3)

ELEVATORS SERVO CONTROL PRINCIPLES

ACTIVE MODE

When the elevator servo control is in the active mode, both solenoid valves are de-energized. The servovalve is controlled by its dedicated computer and the solenoid valves by other computers.
The servo control is pressurized.

G7508471 - G3NT1T0 - FM27D200000003

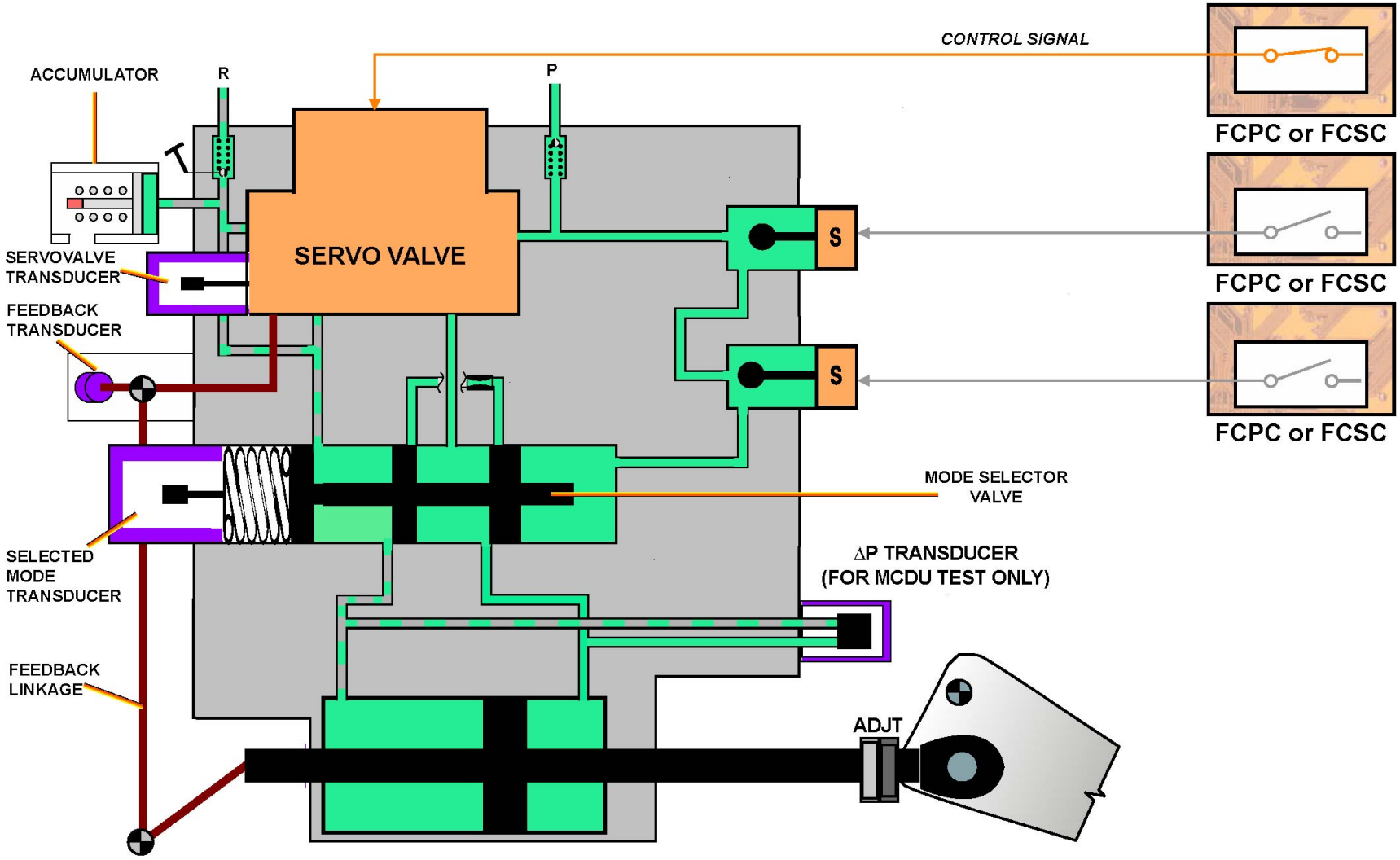

ELEVATORS SERVO CONTROL PRINCIPLES - ACTIVE MODE

G7508471 - G3NT1T0 - FM27D200000003

PITCH D/O (ELEVATOR) (3)

ELEVATORS SERVO CONTROL PRINCIPLES (continued)

DAMPING MODE

In damping mode, one of the two solenoid valves is energized by the computer controlling the adjacent servocontrol.
The servo control is also considered in damping mode if not hydraulically pressurized.

G7508471 - G3NT1T0 - FM27D200000003

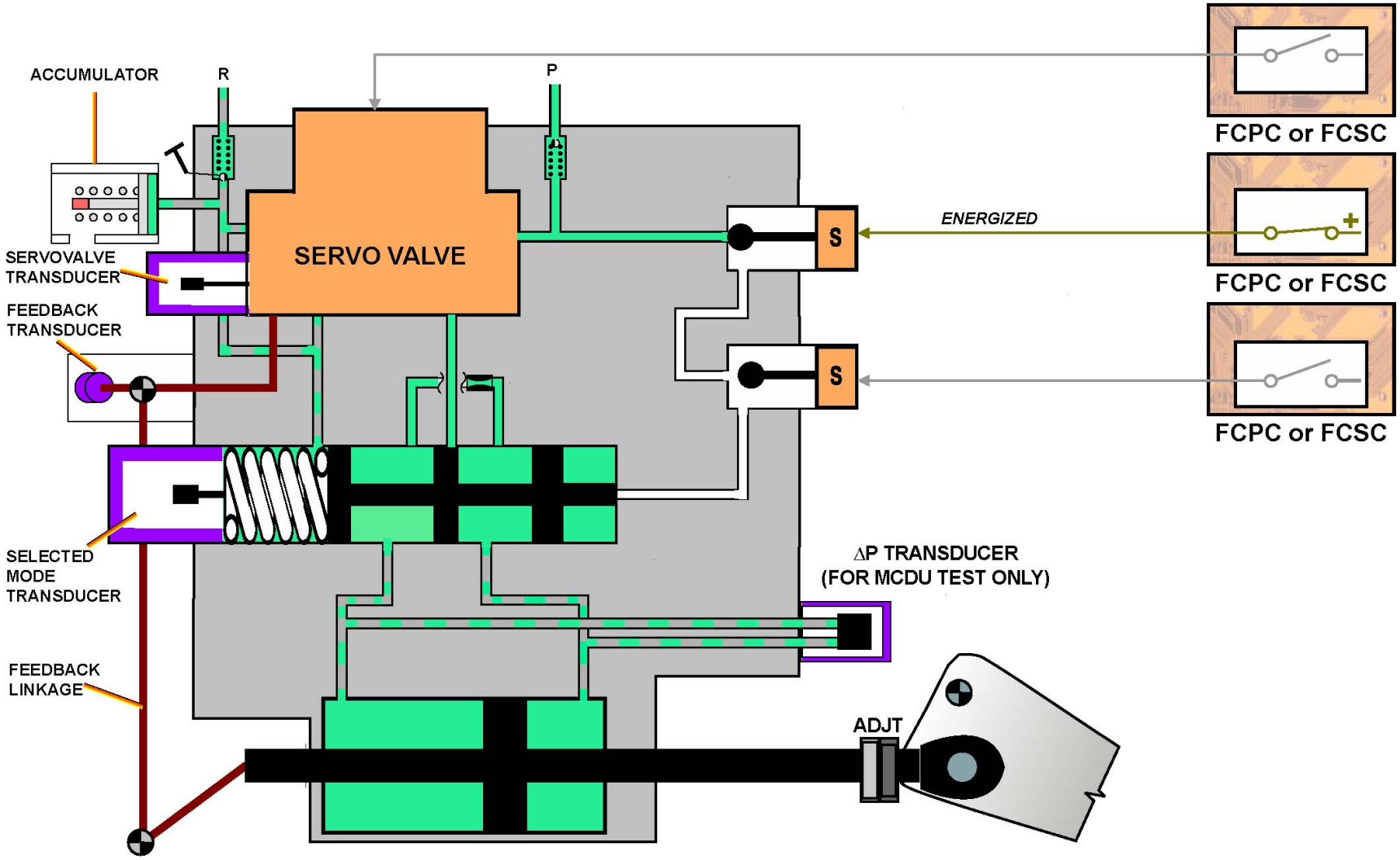

ELEVATORS SERVO CONTROL PRINCIPLES - DAMPING MODE

G7508471 - G3NT1T0 - FM27D200000003

PITCH D/O (ELEVATOR) (3)

ELEVATORS SERVO CONTROL PRINCIPLES (continued)

RE-CENTERING MODE

When the elevator servo control is in the re-centering mode, both solenoid valves are de-energized and no command signals are sent to the servo valve. The servocontrol is hydraulically powered.
Thanks to the mechanical feedback linkage, the servo control is mechanically controlled in its neutral position.

G7508471 - G3NT1T0 - FM27D200000003

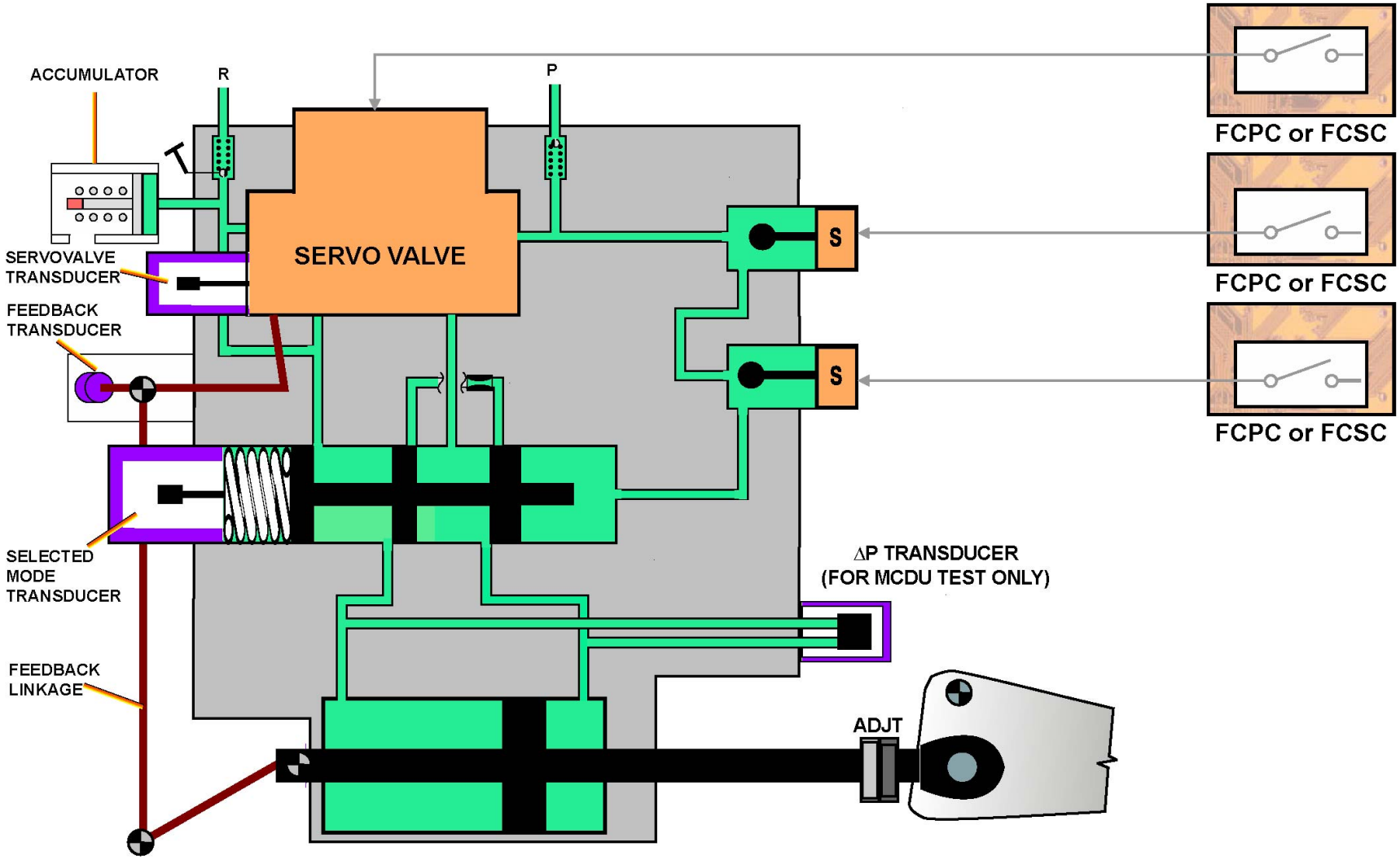

ELEVATORS SERVO CONTROL PRINCIPLES - RE-CENTERING MODE

G7508471 - G3NT1T0 - FM27D200000003

PITCH D/O (ELEVATOR) (3)

ELEVATORS SERVO CONTROL PRINCIPLES (continued)

TEST/ADJUSTMENT

The servo control design enables the test of the accumulator, the inlet blocking valve, the return blocking valve and the return relief valve using the accumulator sight indicator and a test finger.
The test finger is manually operated by using an hexagon socket wrench (see maintenance manual).
Rigging of the servocontrol is done by adjusting the piston rod length.

G7508471 - G3NT1T0 - FM27D200000003

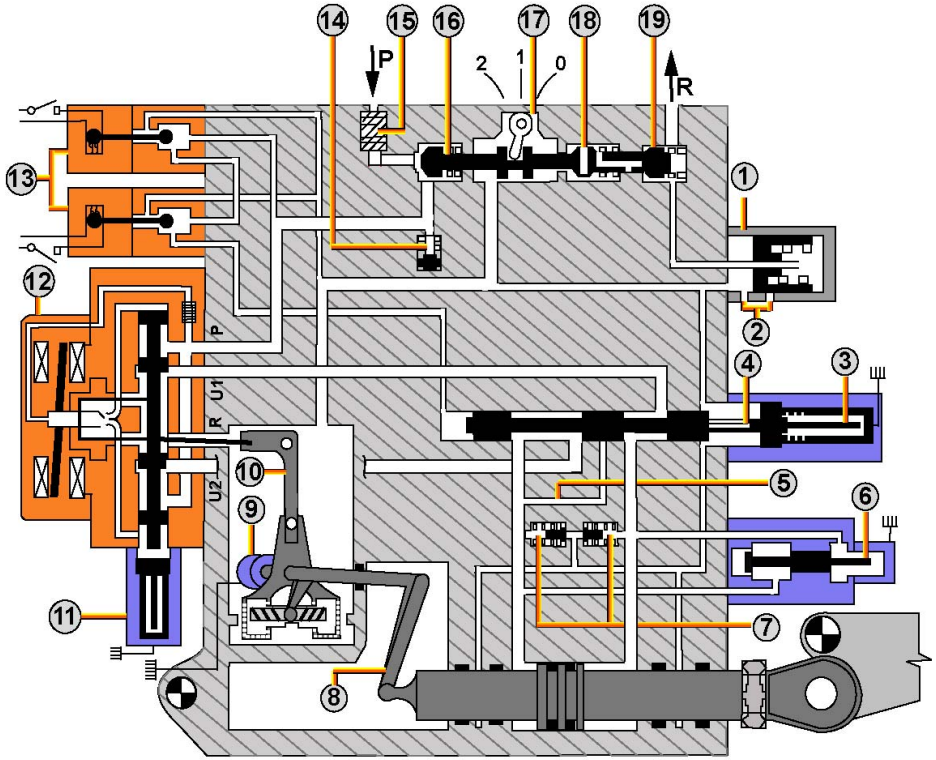

1 ACCUMULATOR
2 ACCUMULATOR SIGHT INDICATOR
3 MODE SELECTOR VALVE POSITION TRANSDUCER
4 MODE SELECTOR VALVE
5 DAMPING ORIFICE
6 DIFFERENTIAL PRESSURE TRANSDUCER
7 ANTICAVITATION VALVES
8 FEEDBACK LINKAGE
9 FEEDBACK TRANSDUCER
10 MECHANICAL INPUT
11 SERVOVALVE TRANSDUCER
12 SERVOVALVE
13 SOLENOID VALVES
14 TEST CHECK VALVE
15 FILTER
16 INLET BLOCKING VALVE
17 TEST FINGER
0 = ZERO
1 = LEAK CHECK
2 = DISCHARGE
18 RETURN BLOCKING VALVE
19 RETURN RELIEF VALVE

ELEVATORS SERVO CONTROL PRINCIPLES - TEST/ADJUSTMENT

PITCH D/O (THSA) (3)

GENERAL

In conjunction with the two elevators, a Trimmable Horizontal Stabilizer (THS) is used to control the pitch of the aircraft.

TRIMMABLE HORIZONTAL STABILIZER (THS)

The THS is attached to a ball nut which is actuated by a ball screw jack and powered by two hydraulic motors linked through a differential.
The ball screw jack has a fail safe design. It consists of a double load path.

THS MECHANICAL CONTROL

The THS mechanical control can be used:
- on ground, for maintenance or take off trim setting.
- in flight, as a standby system if automatic control (autotrim) is not available.

When an input is made, the feedback differential gearbox comparator compares the input with the movement of the ball screw jack (feedback gear). The difference between the two mechanical signals is shown as the control differential output.
The control differential output moves the control valve.
The control valve opens and lets hydraulic fluid go into the hydraulic motors. Both hydraulic motors operate at the same time and drive the ball screw jack, which in turn, moves the THS.
During operation with Electric pump, when the flow rate is low, the pressure maintaining device keeps the pressure-off brakes released.
When the THS actuator gets to the demanded position the feedback gear moves the control differential input, which decreases the control valve opening. The control valve closes and stops the hydraulic flow to the motors. The ball screw jack stops at the commanded position.

G7508471 - G3NT1T0 - FM27DC000000002

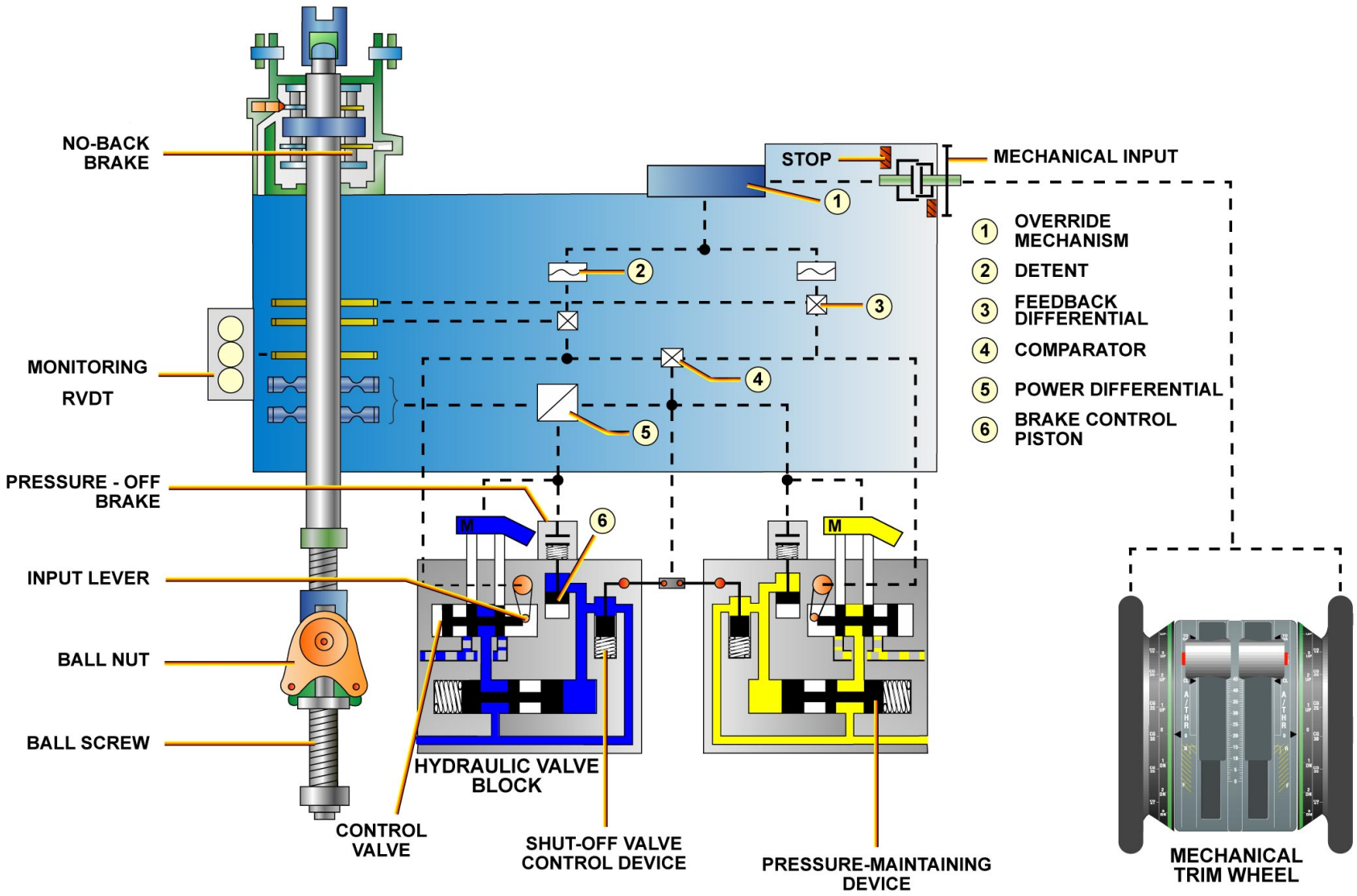

GENERAL ... THS MECHANICAL CONTROL

G7508471 - G3NT1T0 - FM27DC000000002

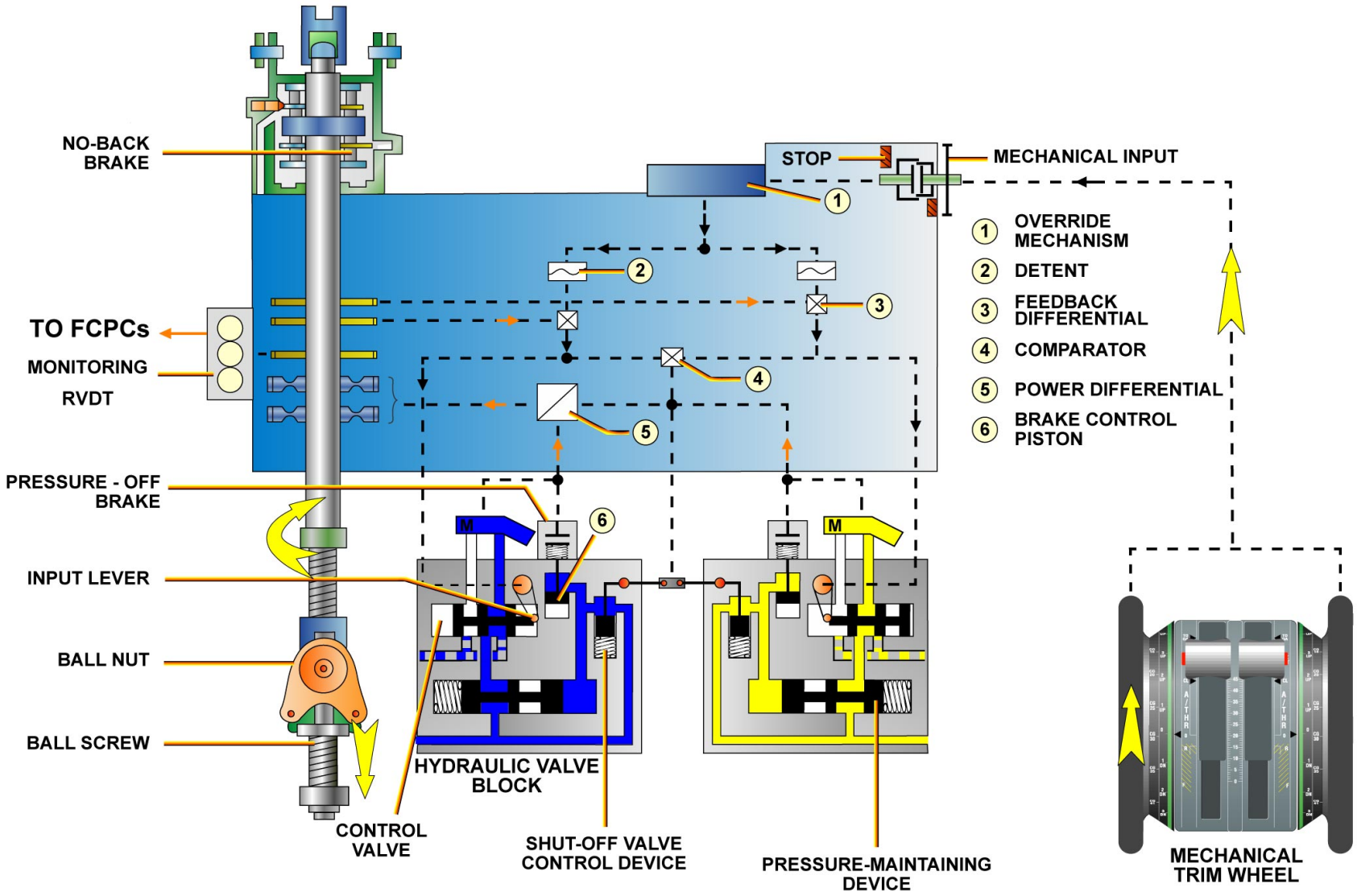

GENERAL ... THS MECHANICAL CONTROL

This Page Intentionally Left Blank

G7508471 - G3NT1T0 - FM27DC000000002

PITCH D/O (THSA) (3)

THS ELECTRICAL CONTROL

The Pitch Trim Actuator (PTA) consists of three Digital Electronic Modules (DEMs) and their associated electrical motors.
An override mechanism, which is installed in the PTA, makes sure that the mechanical control through the trim wheels cancels the electrical control.
The FCPCs transmit a deflection order to the pitch trim actuator. Among the FCPCs able to control the THS, the computer having the servoloop control priority transmits the deflection order to its associated digital electronic modules. This digital electronic module controls its associated electrical motor. The two other motors are in standby.
For the THS servolooping computation, the computers need to acquire the pitch trim actuator output position and the screw jack position. This information is sent by transducer units, which are of the RVDT type. The electrical control achieves the autotrim function. The command Rotary Variable Differential Transducers (RVDTs) transmit the PTA output position to the DEMs. The monitor RVDTs transmit the ball screw position to the FCPCs monitor channels.
When a manual command is made with the trim wheels, the override mechanism gives priority over the electrical command from the FCPCs. It mechanically disconnects the PTA output from the mechanical input (via electro-magnetic clutch) and also operates the overriding detection switches which in turn signal the FCPC's to stop any electrical command from the FCPC's.
ONE HYDRAULIC SUPPLY FAILURE:
If one hydraulic supply to the THS actuator becomes unserviceable, the related Pressure Off Brake (POB) is applied. The POB stops and holds the hydraulic motor shaft. The power differential operates at a reduced speed. The THS actuator is driven at half speed by the motor that stays in operation.
DUAL HYDRAULIC SUPPLY FAILURE:
If there is a complete loss of hydraulic power to the THS actuator, the POBs and the no-back brake operate. They hold the THS actuator ball screw jack in its last signalled position.
THS CONTROL VALVE JAMMING:
If the control valve stops between the fully open and the fully closed positions:
- the control valve opening in the defective circuit lets the hydraulic motor continue to operate,
- the ball screw jack continues to operate and moves the feedback gear after the serviceable control valve reaches its neutral position,
- the comparator which is connected to both control valves operates,
- the comparator piston operates both shutoff valves,
- the shutoff valves stop the hydraulic supply to both hydraulic motors,
- the POBs stop the hydraulic motors and the ball screw-jack stops.

G7508471 - G3NT1T0 - FM27DC000000002

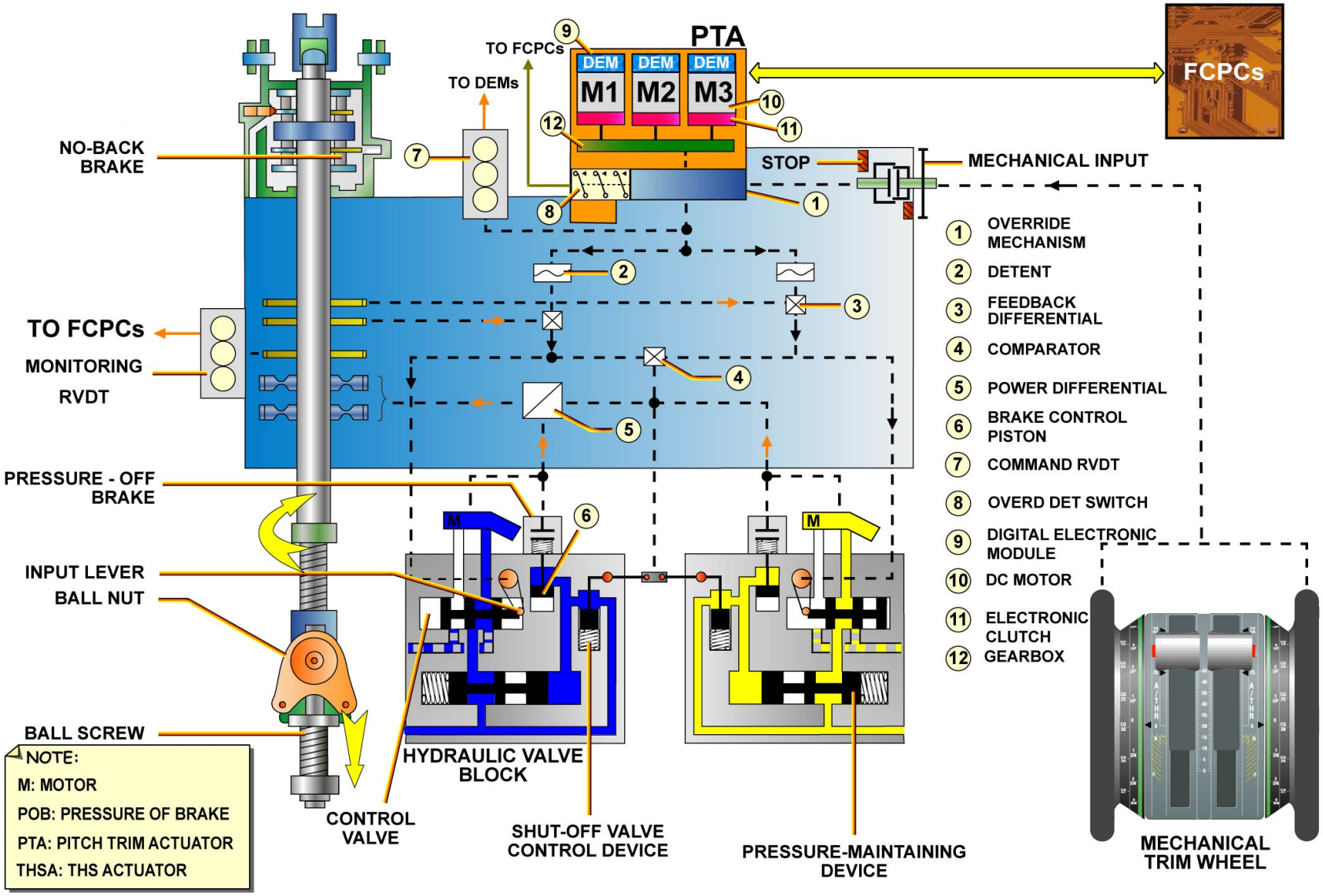

THS ELECTRICAL CONTROL

G7508471 - G3NT1T0 - FM27DC00000002

PITCH D/O (THSA) (3)

OPERATION

The computers also need the aircraft response from the Air Data Inertial Reference Units (ADIRUs).
For the computation of the surface deflection orders, the FCPCs acquire additional information.
The data are from:
- accelerometer units,
- radio altimeters.

The FCDC receives the THS and elevators positions and sends them to the EIS for display on the Flight Controls (F/CTL) ECAM page.

G7508471 - G3NT1T0 - FM27DC000000002

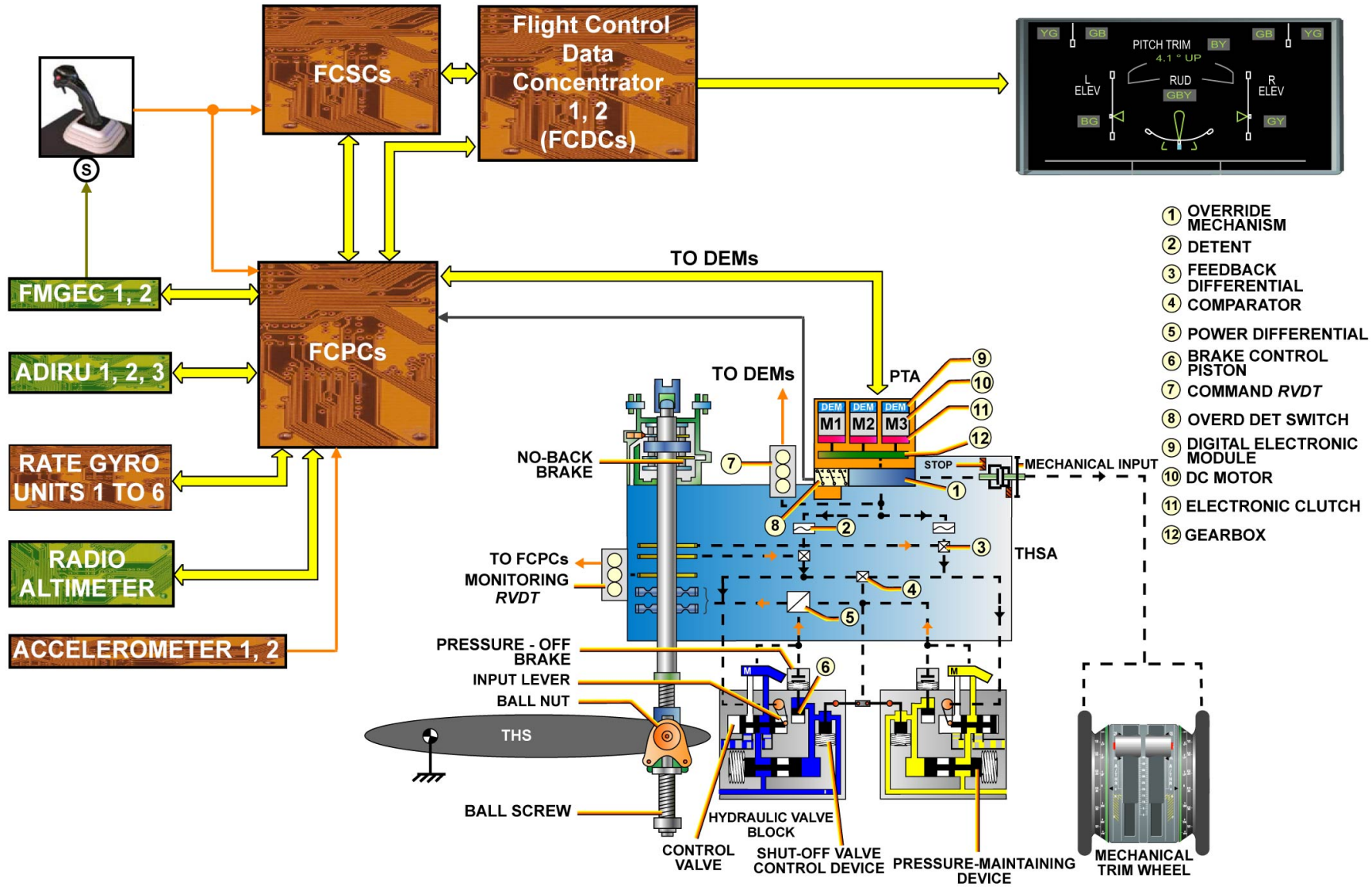

OPERATION

G7508471 - G3NT1T0 - FM27DC00000002

PITCH D/O (THSA) (3)

CHECKABLE SHEAR PIN DESCRIPTION

The lower attachment of the THSA is composed of a permanently loaded Primary Load Path (PLP) and an unloaded Secondary Load Path (SLP).
If the PLP fails, a Checkable Shear Pin (CSP) is installed on the lower attachment of the THSA to give an indication of an SLP engagement.
The CSP is composed of:
- a piston,
- an internal spring,
- 2 switches assigned to the two RVDTs monitoring,
- a check button.

In case of SLP engagement, the spring pops out the piston and the two switches are triggered.
Then, the RVDT circuit is opened so that the FCPCs detect the failure, the THSA electrical control is inhibited and a failure message is displayed on the ECAM.
Following an SLP engagement, the CSP cannot be reset to prevent from inadvertent operation. Maintenance action is required to trouble shoot the THSA before the next flight.
To verify the correct operation of the CSP:
- push the check button in order to activate the switches and to display the related ECAM warning messages,
- then, release the check button to get the switches deactivated and the messages disappeared.

G7508471 - G3NT1T0 - FM27DC000000002

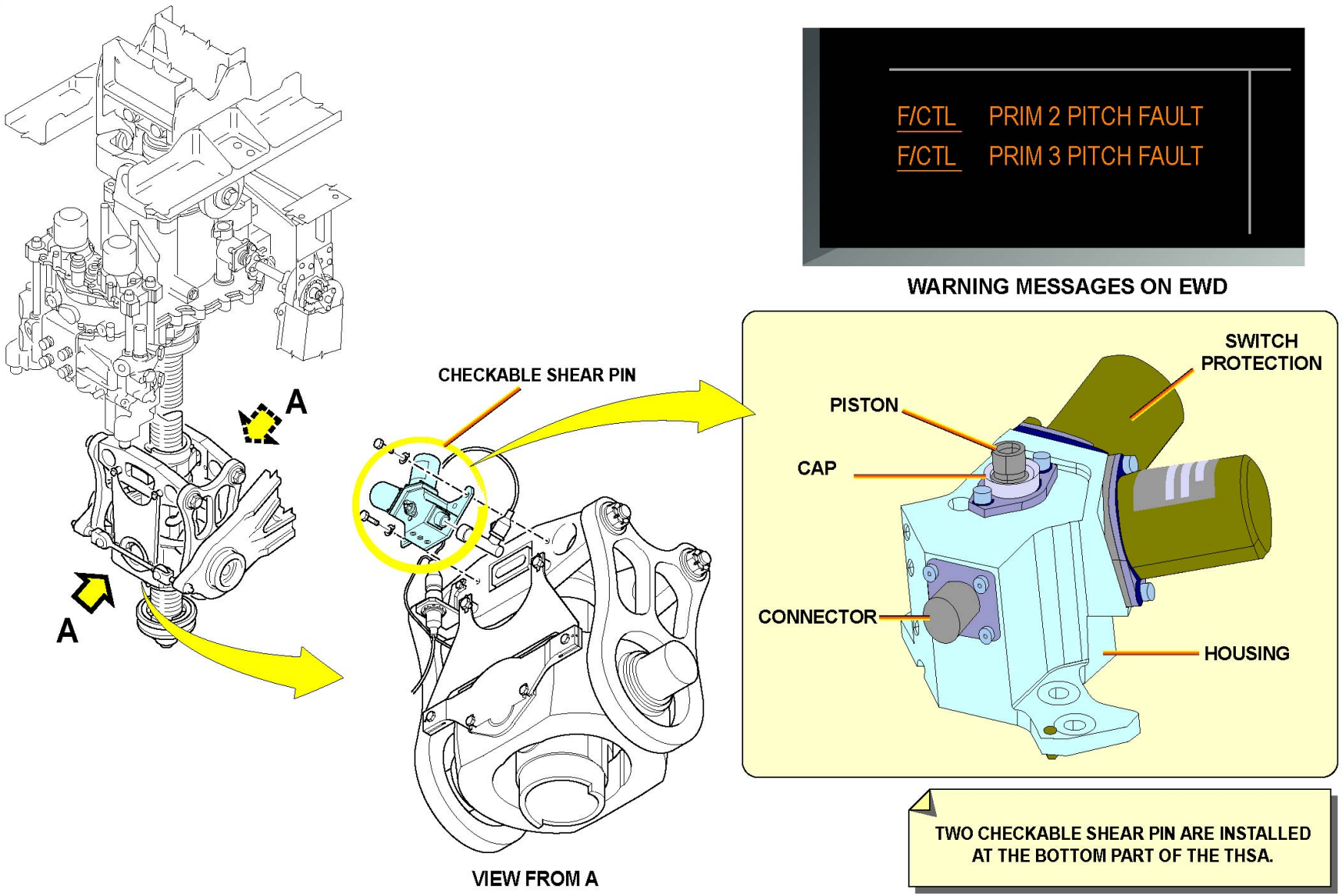

CHECKABLE SHEAR PIN DESCRIPTION

YAW D/O (3)

GENERAL

The rudder gives the yaw control.
The rudder can be controlled (rudder pedals) and trimmed (rudder trim control panel) manually.
It also carries out automatically the dutch roll damping and the turn coordination.
The rudder is electrically controlled by the Flight Control Computers and hydraulically actuated by three synchronized servocontrols.
In case of total loss of the normal servoing, an electrical backup (BPSs and BCM) also permits the yaw control (see page 17/23).

G7508471 - G3NT1T0 - FM27D400000003

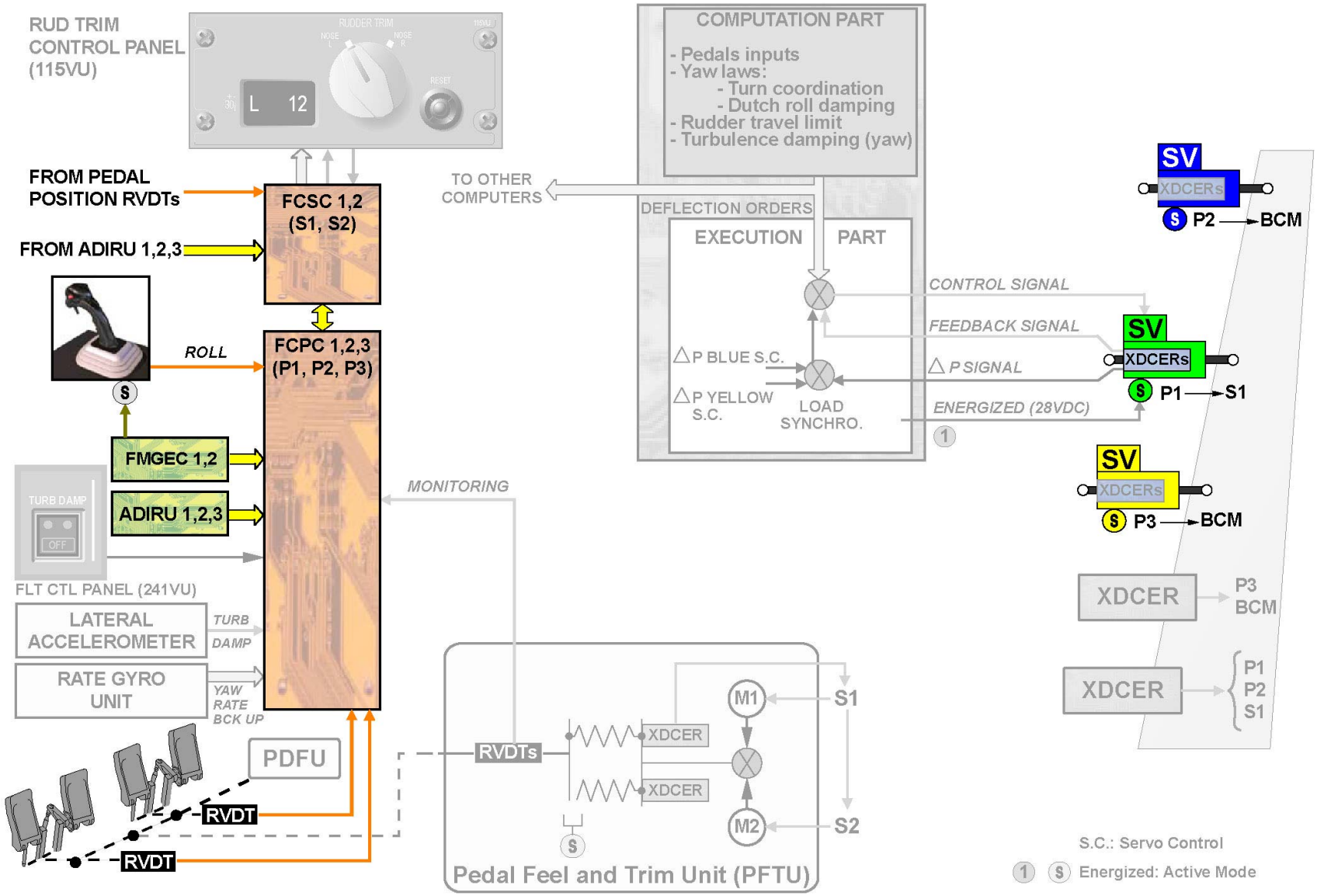
RUD TRIM CONTROL PANEL (115VU)
RUDDER TRIM
L 12
RESET
FROM PEDAL POSITION RVDTs
FROM ADIRU 1,2,3
FCSC 1,2 (S1, S2)
FCPC 1,2,3 (P1, P2, P3)
ROLL
FMGEC 1,2
ADIRU 1,2,3
TURB DAMP
OFF
FLT CTL PANEL (241VU)
LATERAL ACCELEROMETER
TURB DAMP
RATE GYRO UNIT
YAW RATE BCK UP
PDFU
RVDT
RVDT
MONITORING
TO OTHER COMPUTERS
COMPUTATION PART
- Pedals inputs
- Yaw laws:
- Turn coordination
- Dutch roll damping
- Rudder travel limit
- Turbulence damping (yaw)
DEFLECTION ORDERS
EXECUTION
PART
CONTROL SIGNAL
FEEDBACK SIGNAL
P BLUE S.C.
P YELLOW S.C.
LOAD SYNCHRO.
P SIGNAL
ENERGIZED (28VDC)
SV
XDCERs
P2 BCM
SV
XDCERs
P1 S1
SV
XDCERs
P3 BCM
XDCER
P3 BCM
XDCER
P1 P2 S1
RVDTs
XDCER
XDCER
M1
M2
S1
S2
Pedal Feel and Trim Unit (PFTU)
S.C.: Servo Control
Energized: Active Mode

GENERAL

YAW D/O (3)

MANUAL MODE

In manual mode, the rudder achieves the yaw control from the rudder pedals, the Rudder Trim (RUD TRIM) control panel, or the side sticks. The master computer, Flight Control Primary Computer 1 (FCPC1) in normal configuration, elaborates the yaw deflection order taking into account:
- yaw orders from the pedals,
- roll orders from the side sticks combined to ADIRU inputs (lateral acceleration) for turn coordination,
- ADIRU inputs (lateral acceleration) for dutch roll damping.

IN CASE OF ADIRUS FAILURE:
The rate gyro unit signals the master computer for dutch roll damping in alternate.
The yaw deflection orders are sent to the other FCPCs and to the Flight Control Secondary Computer (FCSC) 1 for servocontrols actuation. Each rudder servocontrol is connected to one FCPC.
In case of failure of the three primary computers, the middle servocontrol is automatically signaled by the FCSC1.
The three electro-hydraulic servocontrols operate simultaneously. They are controlled via a closed loop. The feedback signals are sent from feedback transducers in the rudder servocontrol. Additionally, transducers send the actual rudder position for monitoring functions.
SERVO CONTROL LOAD SYNCHRONIZATION
A differential pressure transducer located on each servocontrol sends P signals to the FCPCs.
This allows load synchronization between the three servocontrols by adjusting the servovalve current.
RUDDER TRAVEL LIMITATION
Depending on the aircraft speed, the rudder and pedal travels are limited in order to avoid excessive loads on the aircraft structure. This limitation function is integrated in the control laws computed by FCPCs and FCSCs.

The rudder position is displayed on the Flight Control (F/CTL) Electronic Centralized Aircraft Monitoring (ECAM) page via the Flight Control Data Concentrators (FCDCs). Only, the lower RVDT is used for indicating on the ECAM.

G7508471 - G3NT1T0 - FM27D400000003

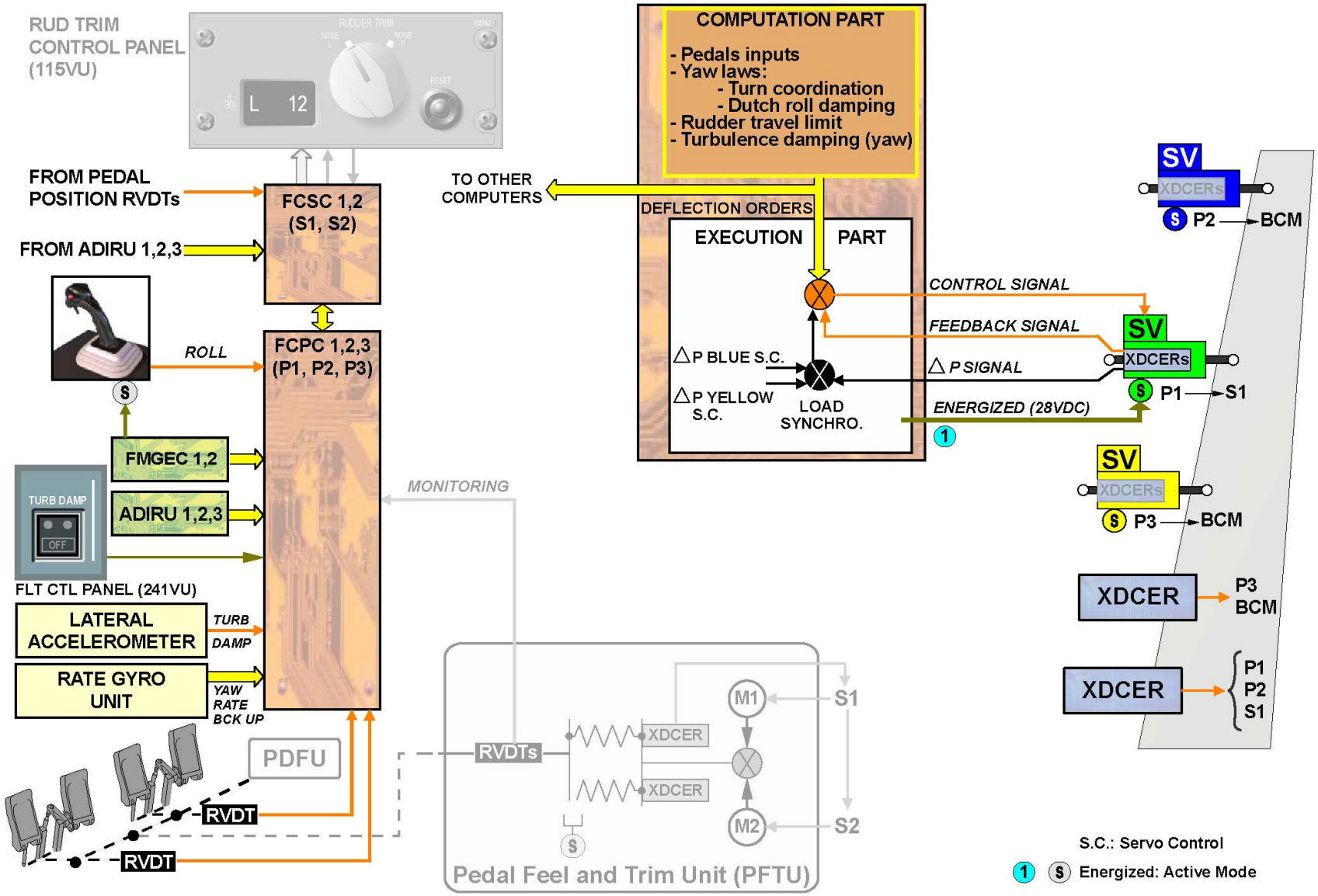

MANUAL MODE

G7508471 - G3NT1T0 - FM27D400000003

YAW D/O (3)

TRIM MODE

Artificial feel and trim forces are generated through the Pedal Feel and Trim Unit (PFTU). The unit includes two springs to give the artificial feel and the increased loading in Autopilot (AP) mode. The unit also includes two trim motors each controlled by one FCSC.
The Pedal Damper and Friction Unit (PDFU) improves the pilot feeling, by generating resisting torques into the Co-Pilot pedals.
In manual trimming, when the crew operates the RUD TRIM control switch, orders are sent to the FCSCs. FCSC 1 (priority) signals its dedicated trim motor, which produces a mechanical feedback to the rudder pedals. The pedal RVDTs will send signals to the FCPCs and FCSC1 to operate the rudder servocontrols for rudder trim. Trim RVDTs, located in the PFTU, send the trim position to the FCSCs for the servoing of the trim motors and for display on the RUD TRIM control panel. Lever RVDTs, located in the PFTU, send the pedal positions to FCPC2 and FCPC3 for monitoring functions.

G7508471 - G3NT1T0 - FM27D400000003

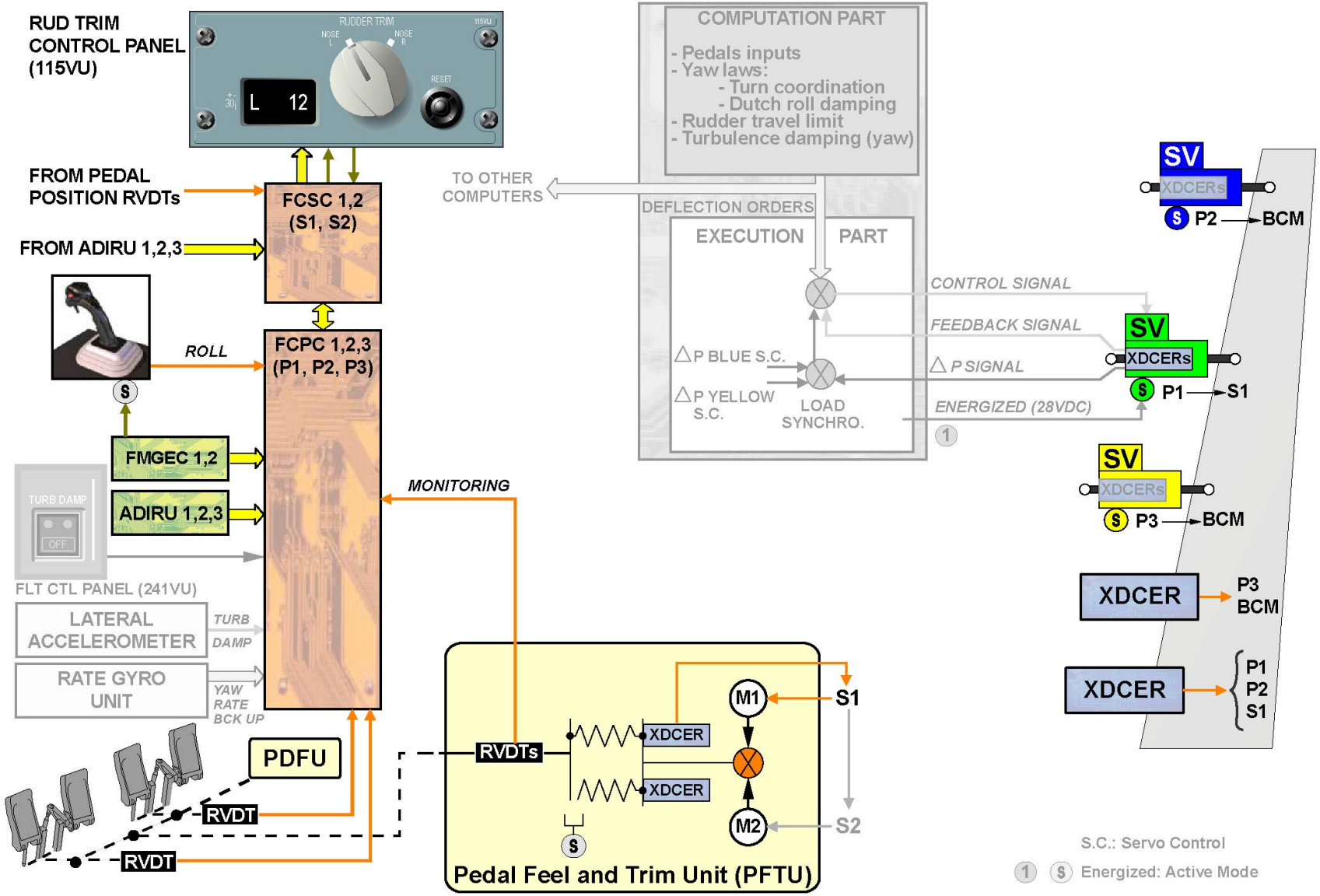
RUD TRIM CONTROL PANEL (115VU)
RUDDER TRIM
NOSE L
NOSE R
115VU
RESET
L 12
FROM PEDAL POSITION RVDTs
FROM ADIRU 1,2,3
FCSC 1,2 (S1, S2)
FCPC 1,2,3 (P1, P2, P3)
ROLL
FMGEC 1,2
ADIRU 1,2,3
TURB DAMP
OFF
FLT CTL PANEL (241VU)
LATERAL ACCELEROMETER
TURB DAMP
RATE GYRO UNIT
YAW RATE BCK UP
PDFU
RVDT
RVDT
MONITORING
RVDTs
XDCER
XDCER
M1
M2
S1
S2
Pedal Feel and Trim Unit (PFTU)
TO OTHER COMPUTERS
COMPUTATION PART
- Pedals inputs
- Yaw laws:
- Turn coordination
- Dutch roll damping
- Rudder travel limit
- Turbulence damping (yaw)
DEFLECTION ORDERS
EXECUTION
PART
CONTROL SIGNAL
FEEDBACK SIGNAL
P BLUE S.C.
P YELLOW S.C.
LOAD SYNCHRO.
P SIGNAL
ENERGIZED (28VDC)
SV
XDCERs
P2
BCM
SV
XDCERs
P1
S1
SV
XDCERs
P3
BCM
XDCER
P3
BCM
XDCER
P1
P2
S1
S.C.: Servo Control
Energized: Active Mode

TRIM MODE

YAW D/O (3)

AUTOPILOT MODE

In Autopilot (AP) mode the Flight Management Guidance and Envelope Computers (FMGECs) send guidance orders to the FCPCs. The master FCPC sends an AP trim order to the FCSC to command the PFTU to move the rudder pedals, and thus, the rudder moves as in manual mode. When the autopilot is engaged, a solenoid operated load threshold device, energized by FMGECs locks the side sticks. In addition, the FMGECs energize a solenoid on the rudder pedal artificial mechanism in order to lock the rudder pedals. In this case spurious commands at the rudder pedals are prevented, but AP overridden by the flight crew is still available.

G7508471 - G3NT1T0 - FM27D400000003

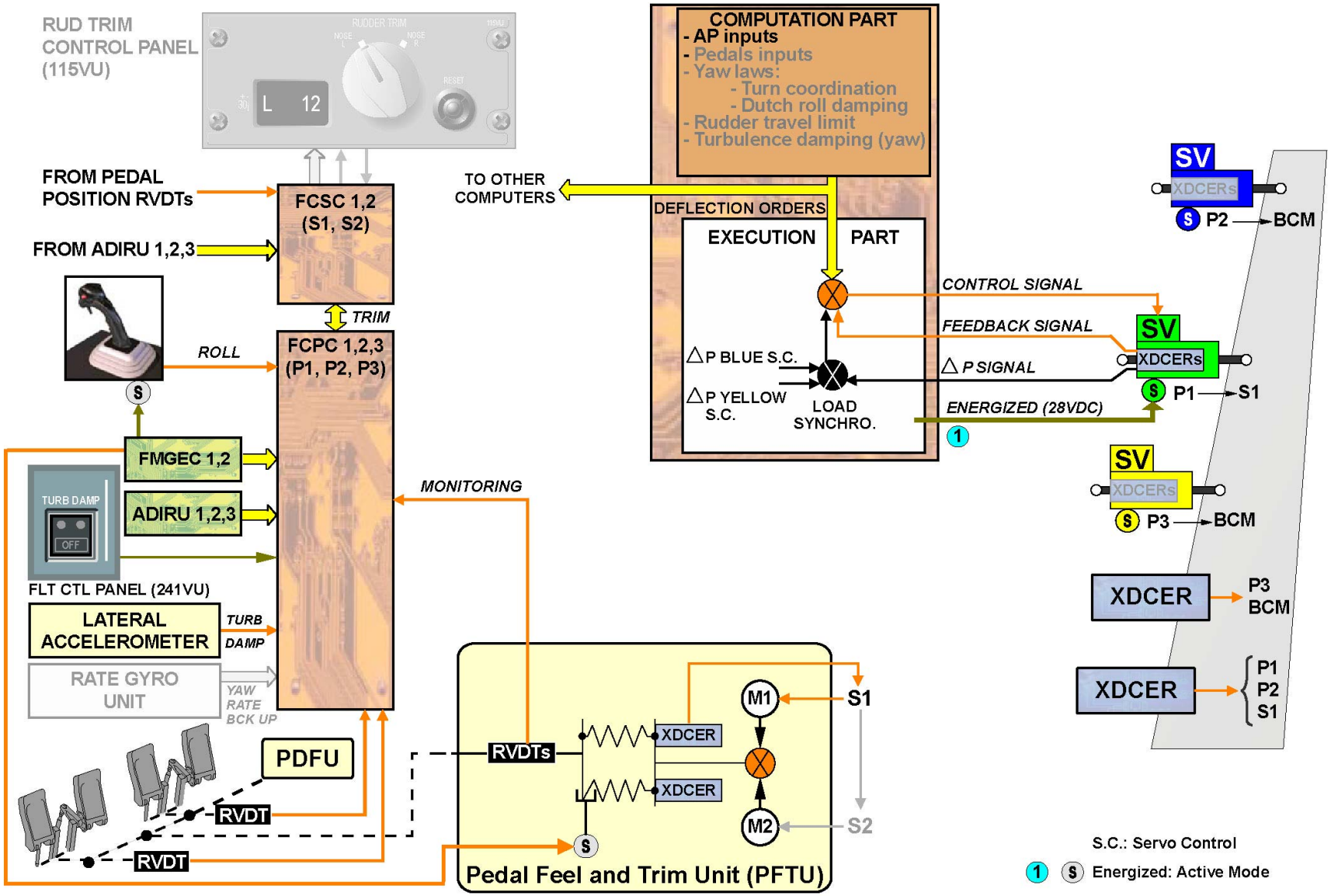

AUTOPILOT MODE

G7508471 - G3NT1T0 - FM27D400000003

YAW D/O (3)

ELECTRICAL BACKUP

If the normal electrical servoing is not operational, an electrical backup automatically takes over. The electrical backup has:
- two Backup Power Supplies (BPSs),
- and one Backup Control Module (BCM).

The two BPSs supply electrical power to the BCM. The BCM can operate the yellow or blue rudder servocontrols.

BACKUP POWER SUPPLY

Each BPS mainly has:
- an electrical power generator,
- a hydraulic motor which drives the rotor of the electrical generator,
- a solenoid valve with two separate windings.

In active mode, both inhibition signals from FCPC1 AND FCSC1 are lost, thus both windings of the solenoid valve are de-energized. The hydraulic flow supplies the hydraulic motor. The electrical generator is driven and delivers electrical power to the BCM. The BPS sends a 3-phase variable frequency AC voltage signal.

BACKUP CONTROL MODULE

The BCM operates automatically in the absence of inhibition signal from FCPC2 and FCPC3 and if at least one BPS is active. The BCM selects and controls one rudder servocontrol at a time (yellow servocontrol in priority). The middle servocontrol and one of the other two servocontrols switch to the damping mode.
It has the following functions:
- acquisition of signals from the pedal position RVDT in the PFTU,
- measuring of the yaw rate through its own rate gyro,
- computation of yaw orders calculated on the basis of pedal position and yaw rate via its own control law,
- servoing of the yellow (or blue) rudder servocontrol with acquisition of the feedback signal from the rudder upper RVDT.

NOTE: Note: Loss of P1, P2, P3, S1 can be caused by computer failure, electrical failure, P/BSW selected OFF or hydraulic system pressure information missing.

The BCM interfaces with the FCDC1 for Built-in Test Equipment (BITE) status.
A test of the electrical backup system is available through the Multipurpose Control & Display Unit (MCDU).

G7508471 - G3NT1T0 - FM27D400000003

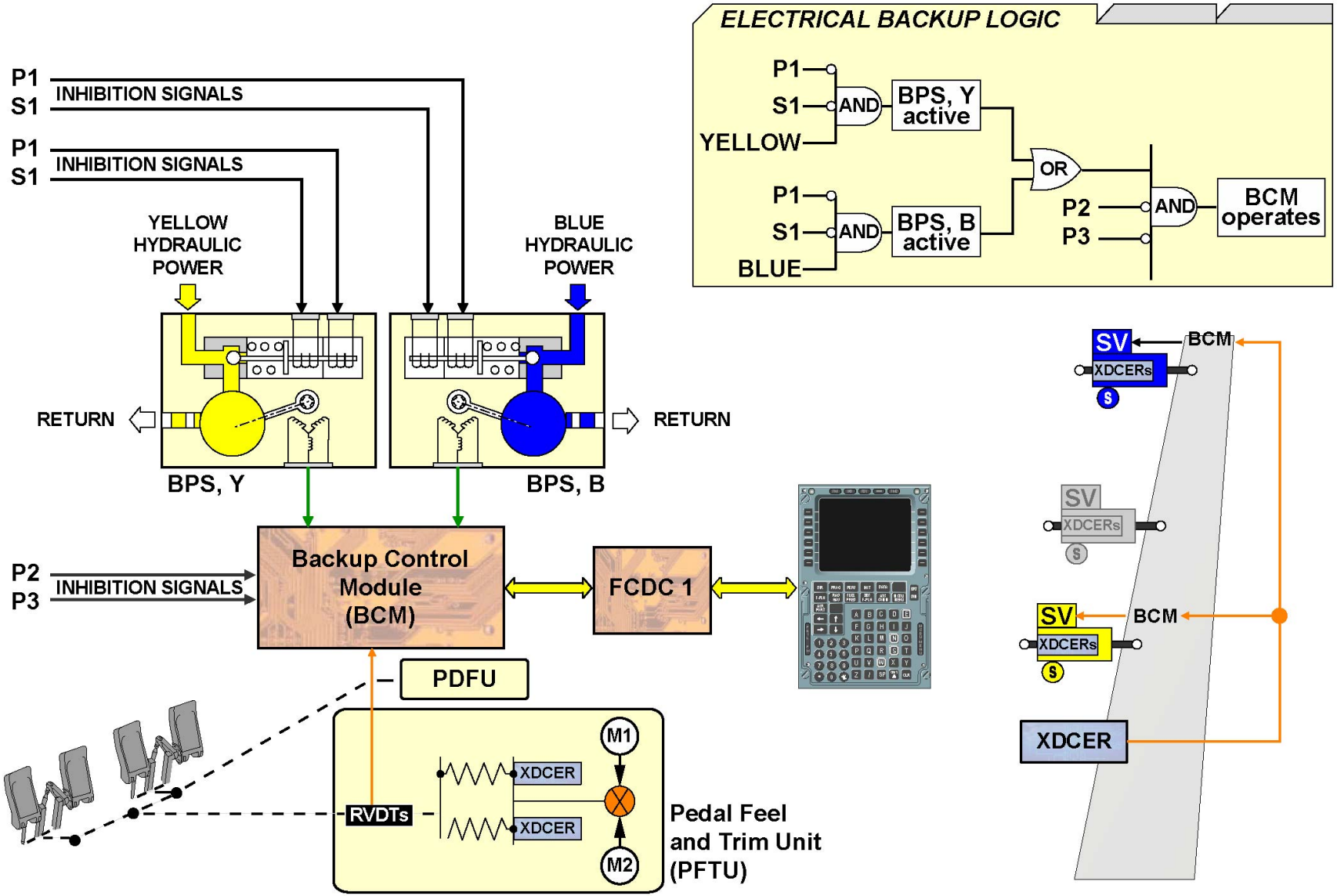

ELECTRICAL BACKUP - BACKUP POWER SUPPLY & BACKUP CONTROL MODULE

G7508471 - G3NT1T0 - FM27D400000003

YAW D/O (3)

SERVO CONTROL PRINCIPLES

ACTIVE MODE

In the active mode, the rudder servo-control actuator is pressurized and the solenoid valve energized by the computer.

G7508471 - G3NT1T0 - FM27D400000003

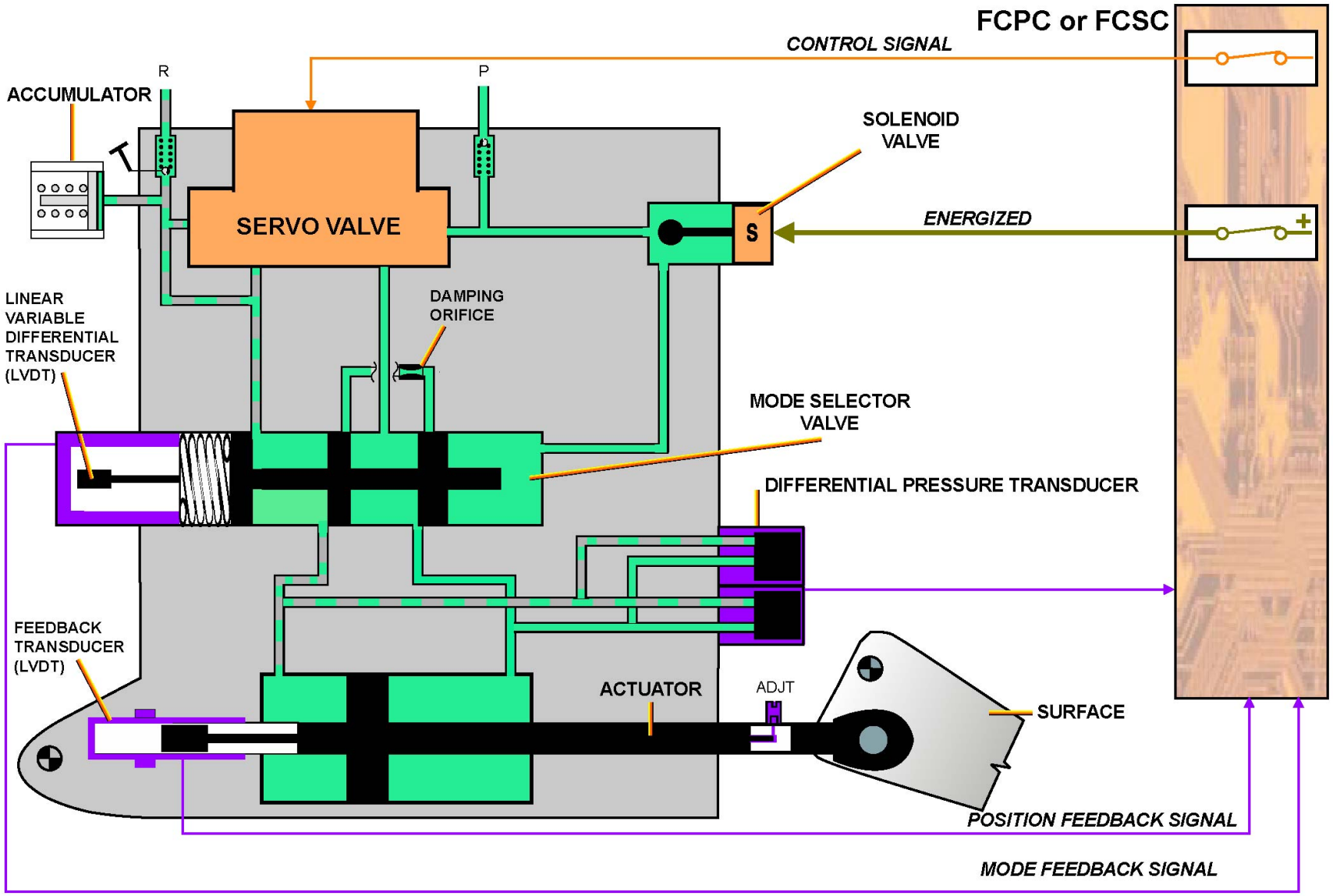

SERVO CONTROL PRINCIPLES - ACTIVE MODE

G7508471 - G3NT1T0 - FM27D400000003

YAW D/O (3)

SERVO CONTROL PRINCIPLES (continued)

DAMPING MODE

If the solenoid valve is de-energized or the servo-control actuator is not pressurized, the servo control actuator is in damping mode. In damping mode, the actuator follows the control surface movements.

G7508471 - G3NT1T0 - FM27D400000003

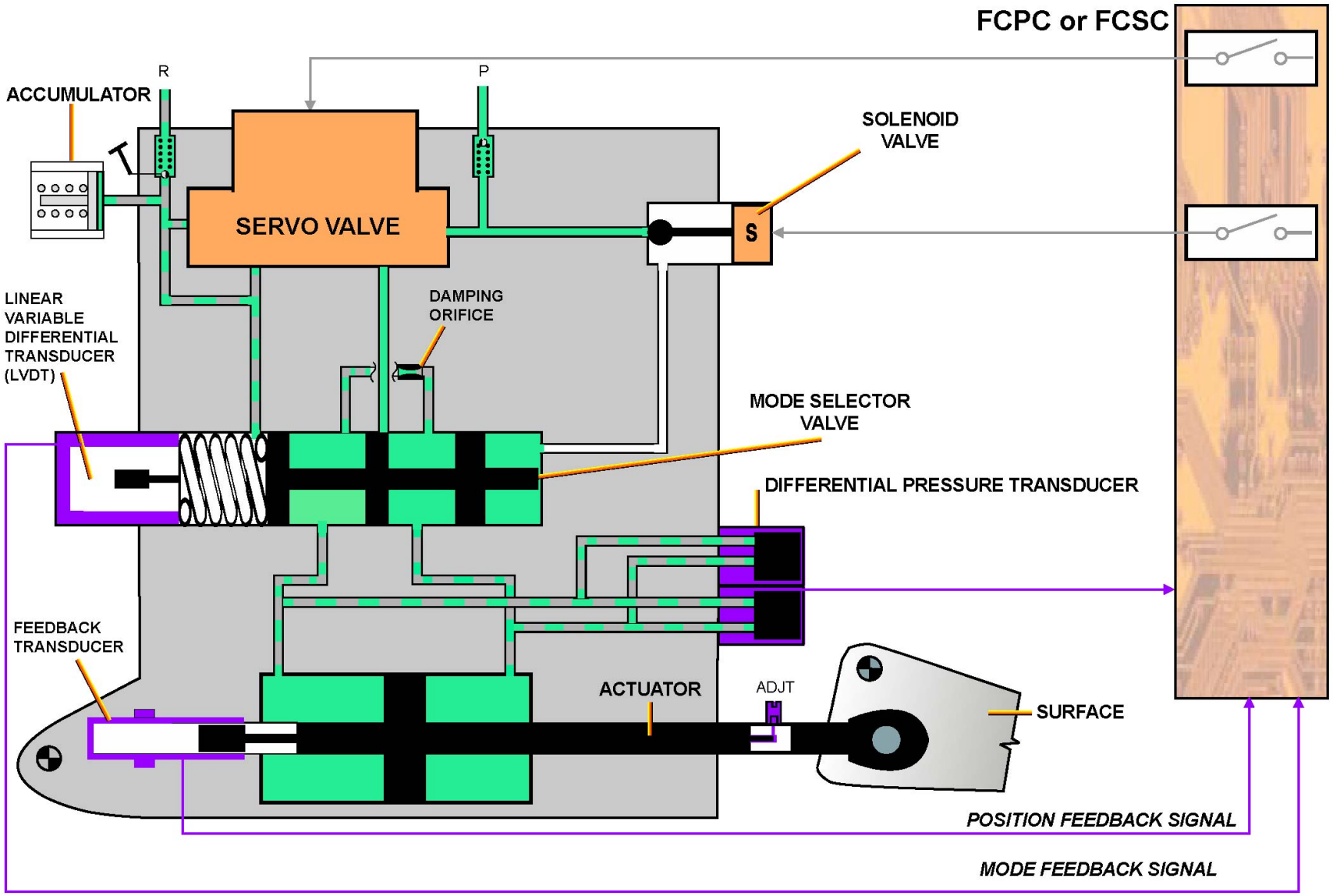

SERVO CONTROL PRINCIPLES - DAMPING MODE

G7508471 - G3NT1T0 - FM27D400000003

YAW D/O (3)

SERVO CONTROL PRINCIPLES (continued)

MAINTENANCE/ADJUSTMENT

No accumulator and valves test is given. Only a discharge point is installed.
The adjustment is possible by acting on the position feedback device.

G7508471 - G3NT1T0 - FM27D400000003

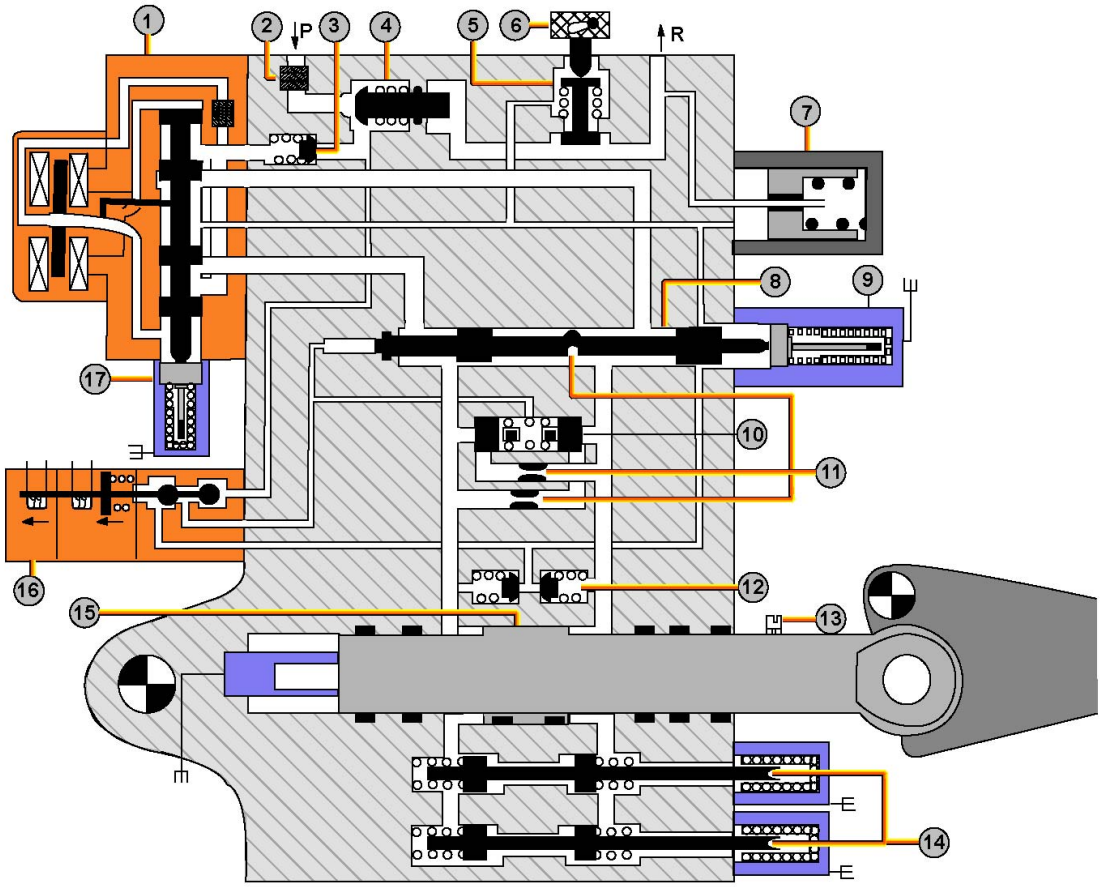

1 SERVOVALVE
2 FILTER
3 CHECK VALVE
4 INLET BLOCKING VALVE
5 RETURN BLOCKING VALVE
6 DISCHARGE DEVICE
7 ACCUMULATOR
8 MODE SELECTOR VALVE
9 MODE SELECTOR VALVE PUSHBUTTON TRANSDUCER UNIT
10 OVERPRESSURE VALVE
11 DAMPING RESTRICTORS
12 ANTICAVITATION VALVES
13 FEEDBACK TRANSDUCER ADJUSTMENT DEVICE
14 DIFFERENTIAL PRESSURE TRANSDUCER
15 FEEDBACK TRANSDUCERS
16 SOLENOID VALVE
17 SERVOVALVE POSITION TRANSDUCER

SERVO CONTROL PRINCIPLES - MAINTENANCE/ADJUSTMENT

G7508471 - G3NT1T0 - FM27D400000003

PRIMARY CTL SPEED BRAKE & LIFT DUMPING D/O (3)

SPEED BRAKE FUNCTION AND LOGIC

The speed brake function is commanded in the flight phase following a pilot's action on the speed brake lever. The surfaces ensuring this function are spoilers 1 through 6, being deflected depending on the lever position. The roll order has priority over the speed brake function. When the sum of roll and speed brake commands, relative to one surface, is greater than the maximum possible deflection, the symmetrical surface is retracted until the difference between the two surfaces is equal to the roll order.
If the Angle Of Attack (AOA) protection, or the Alpha Floor protection, or the Low Speed protection, or if the Maneuver Load Alleviation (MLA) function are activated or if one the Thrust lever is above MCT with speed brakes extended, the speed brakes are automatically retracted. The retraction is announced by an ECAM message. After inhibition, to extend speed brakes again, the lever must be reset for at least 5 seconds. The pitching moment associated to speed brake extension or retraction is compensated by the pitch control laws and the switching made to alternate or direct laws does not affect the speed brake function.
For spoilers 1, 2, 3 and 5, when one surface is not available on one wing, the symmetrical one is inhibited. For spoilers 4 and 6, the faulty servo-control is inhibited while the symmetrical one remains active for the roll control only.

G7508471 - G3NT1T0 - FM27D5F27FM0403

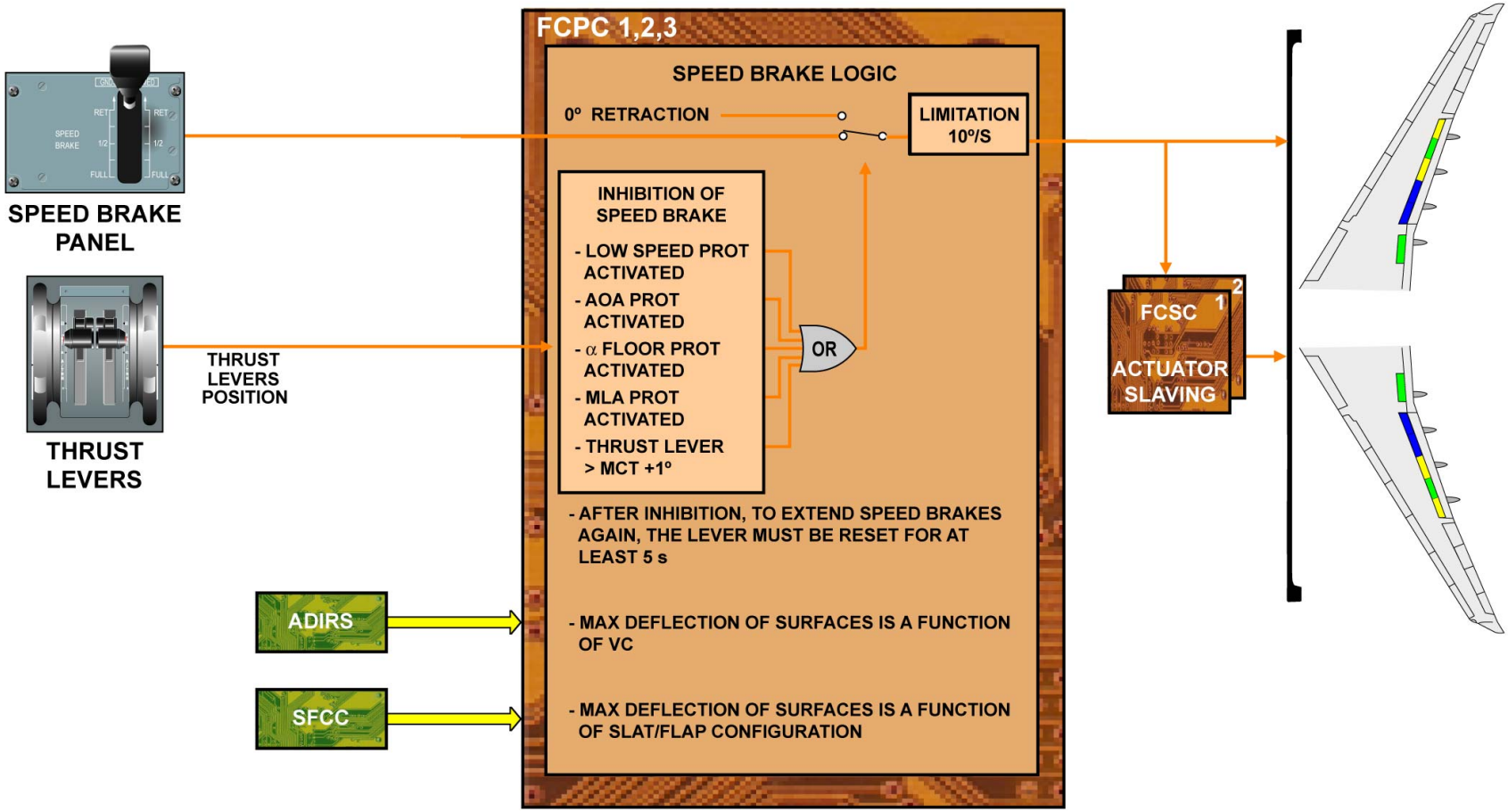

SPEED BRAKE FUNCTION AND LOGIC

G7508471 - G3NT1T0 - FM27D5F27FM0403

PRIMARY CTL SPEED BRAKE & LIFT DUMPING D/O (3)

LIFT DUMPING (GROUND SPOILERS) FUNCTION AND LOGIC

The lift dumping function is automatic and it is activated upon landing to increase the breaking efficiency. Extension of all spoilers is achieved when the A/C is on ground with ground spoilers armed or reverse selected. Ground spoilers are ARMED when the speed brake control lever is pulled up. When the logic conditions which determine the lift dumper extension are fulfilled, a deflection order is sent to spoilers 1 to 6. If only one MLG shock absorber is compressed, the phased lift dumping function is activated at reverse selection.

G7508471 - G3NT1T0 - FM27D5F27FM0403

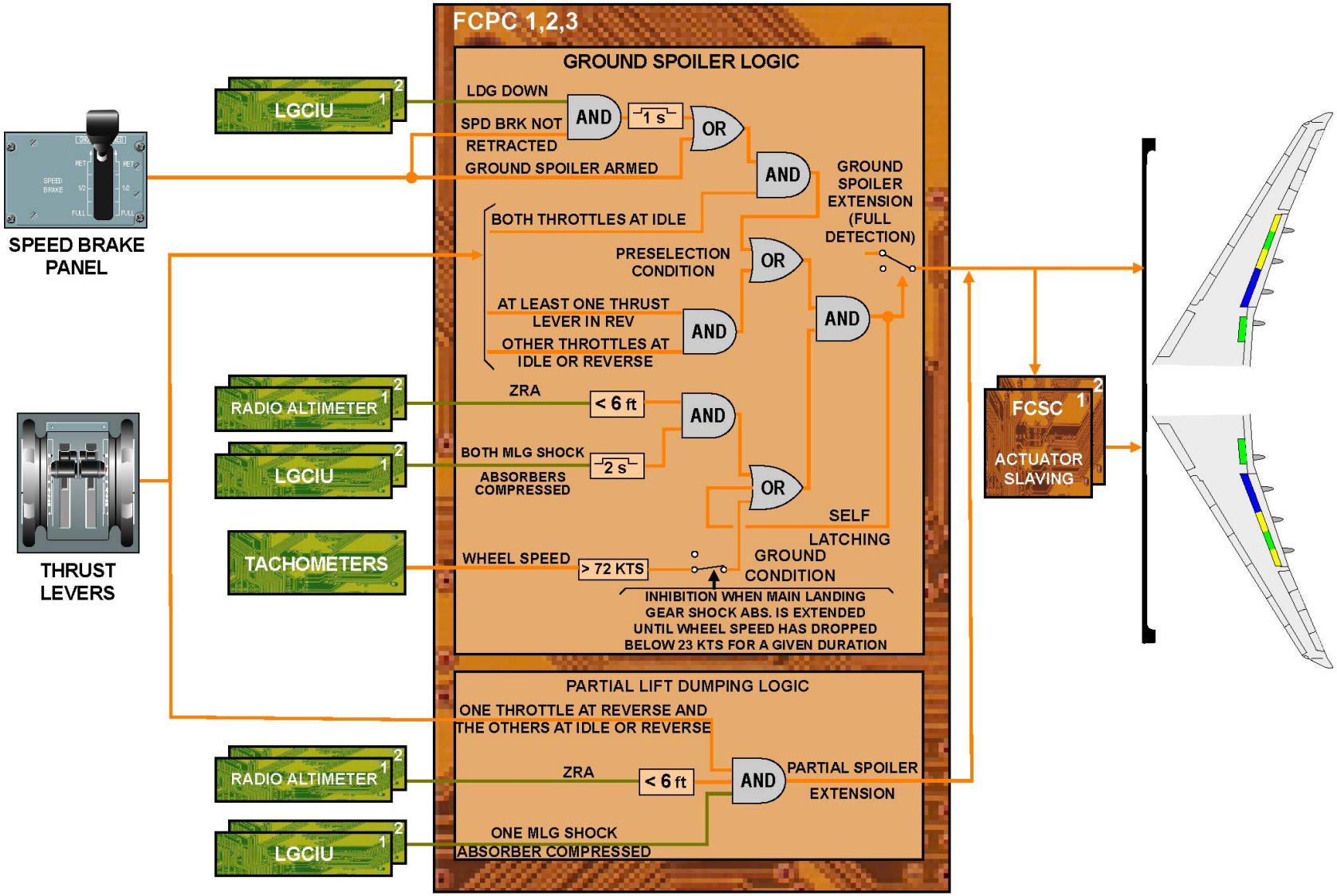

LIFT DUMPING (GROUND SPOILERS) FUNCTION AND LOGIC

G7508471 - G3NT1T0 - FM27D5F27FM0403

PRIMARY CTL SPEED BRAKE & LIFT DUMPING D/O (3)

SERVO CONTROL PRINCIPLES

ACTIVE MODE

In active mode, the spoiler servo control actuator is hydraulically supplied. According to the command signal to the servo valve, the spoiler surface will extend or retract.

G7508471 - G3NT1T0 - FM27D5F27FM0403

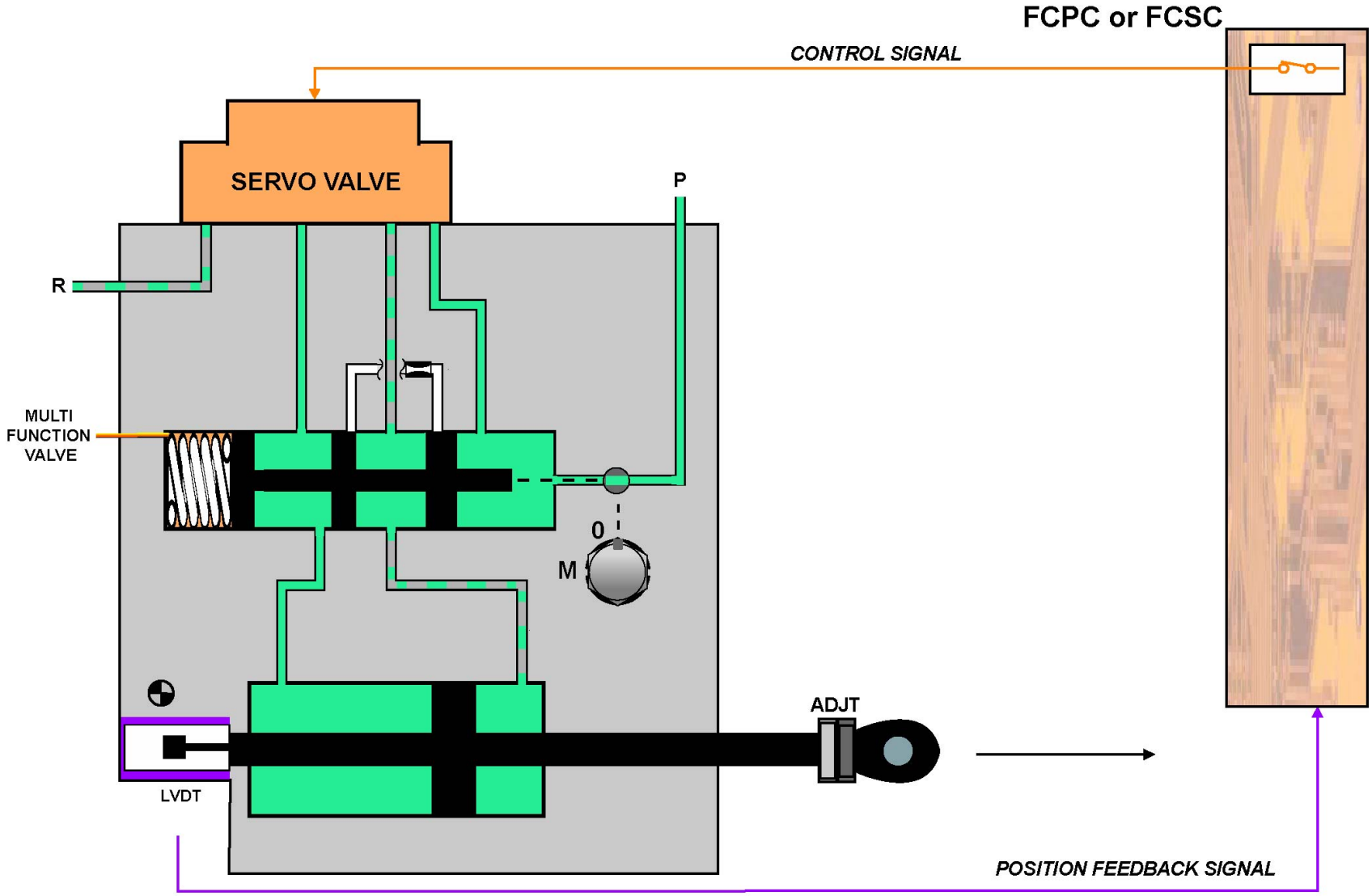

SERVO CONTROL PRINCIPLES - ACTIVE MODE

G7508471 - G3NT1T0 - FM27D5F27FM0403

PRIMARY CTL SPEED BRAKE & LIFT DUMPING D/O (3)

SERVO CONTROL PRINCIPLES (continued)

BIASED MODE

The servo control actuator is pressurized. Due to an electrical failure, the command signal is lost. The biased servo valve pressurizes the retraction chamber. The spoiler actuator stays pressurized and the spoiler remains retracted.

G7508471 - G3NT1T0 - FM27D5F27FM0403

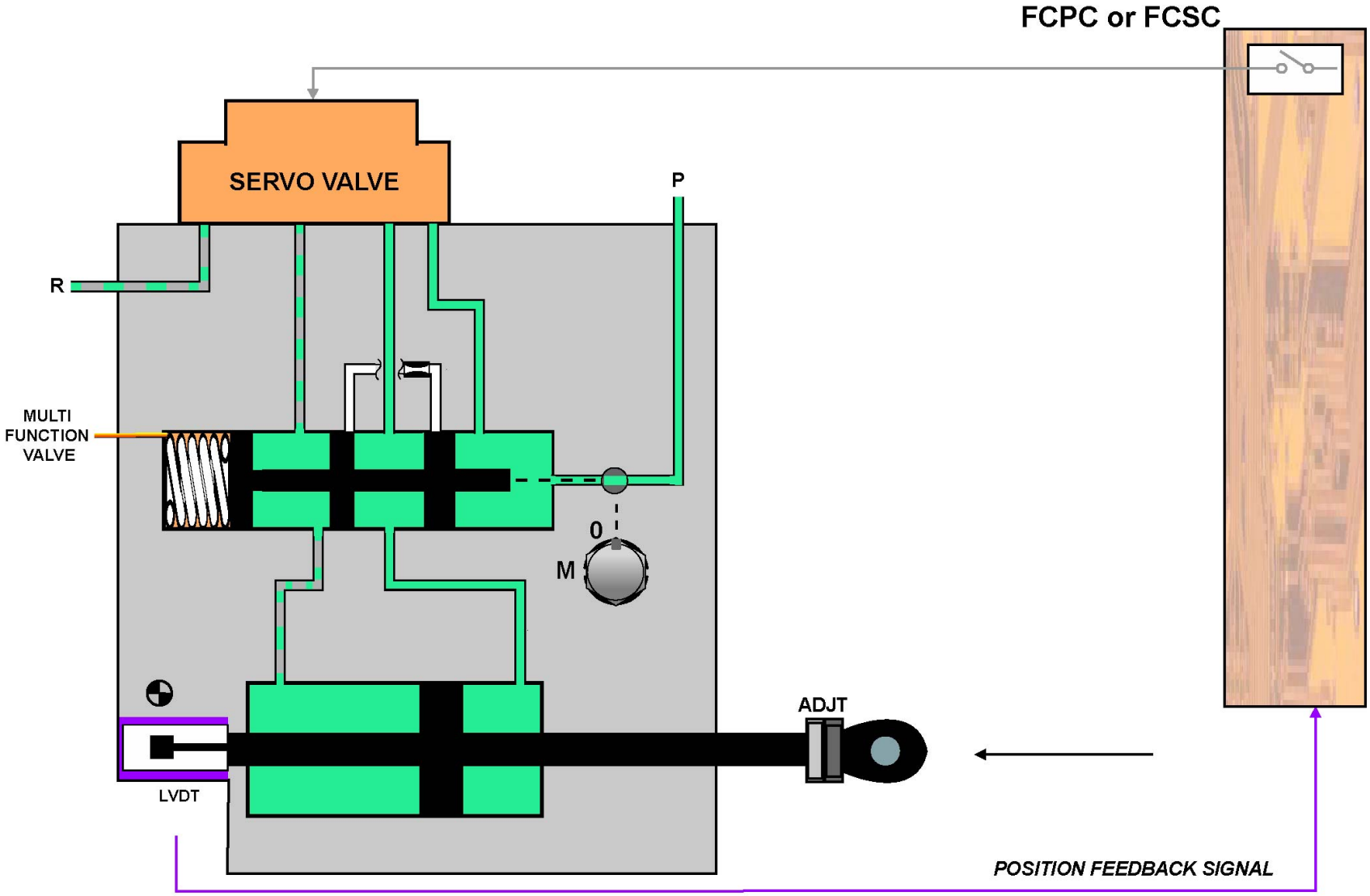

SERVO CONTROL PRINCIPLES - BIASED MODE

G7508471 - G3NT1T0 - FM27D5F27FM0403

PRIMARY CTL SPEED BRAKE & LIFT DUMPING D/O (3)

SERVO CONTROL PRINCIPLES (continued)

LOCKED MODE

In locked mode, the hydraulic pressure is lost. The surface can only be moved towards the retracted position, pushed by aerodynamic forces.

G7508471 - G3NT1T0 - FM27D5F27FM0403

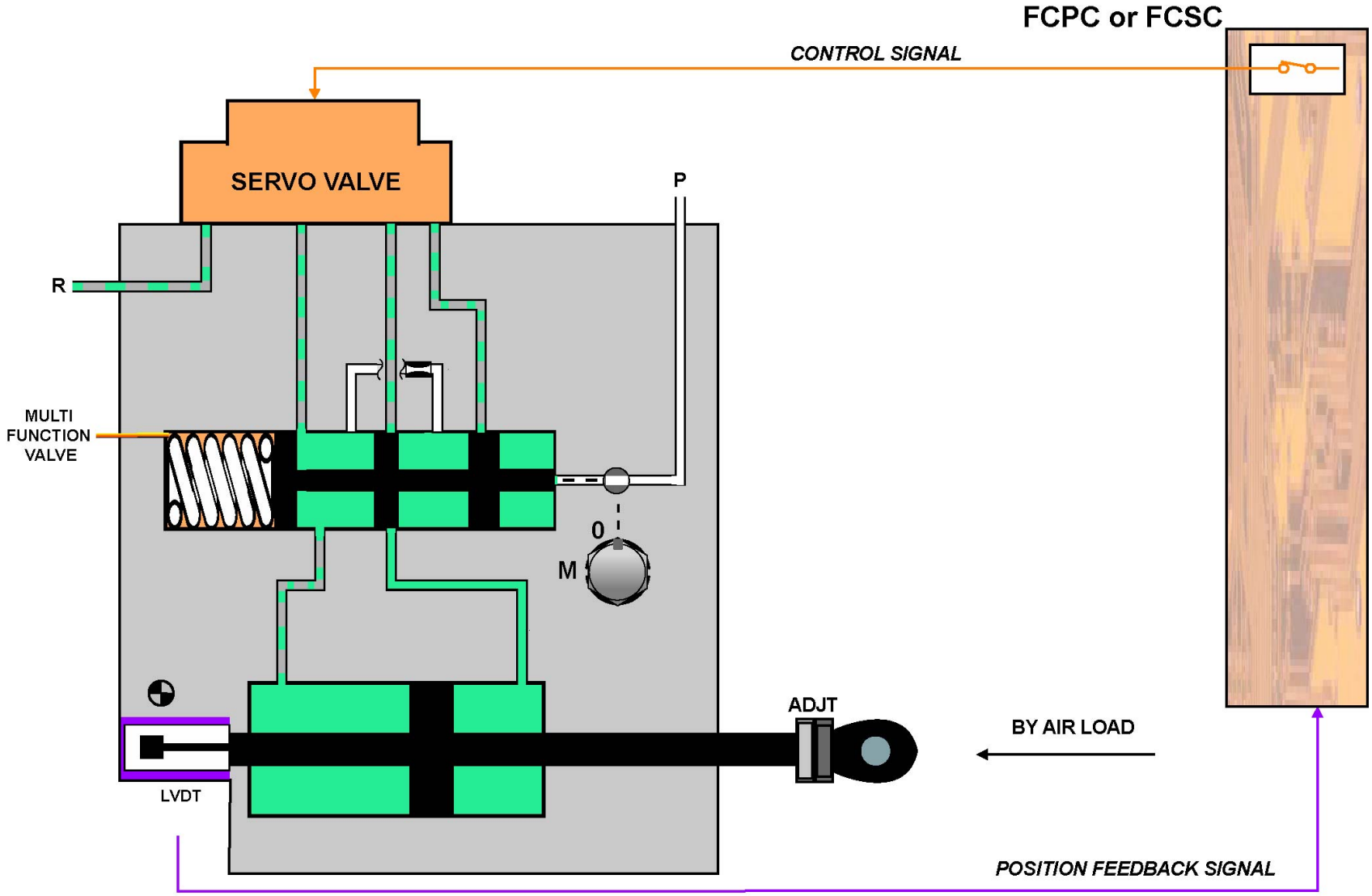

SERVO CONTROL PRINCIPLES - LOCKED MODE

G7508471 - G3NT1T0 - FM27D5F27FM0403

PRIMARY CTL SPEED BRAKE & LIFT DUMPING D/O (3)

SERVO CONTROL PRINCIPLES (continued)

MANUAL MODE

To be unlocked, the servo control actuator must be pressurized. The maintenance unlocking device can be engaged thanks to a key equipped with a red flame. This tool cannot be removed when the servo control is in maintenance mode. Once the maintenance unlocking device is engaged the spoiler surface can be raised manually for inspection purposes.
Servo cut-out

G7508471 - G3NT1T0 - FM27D5F27FM0403

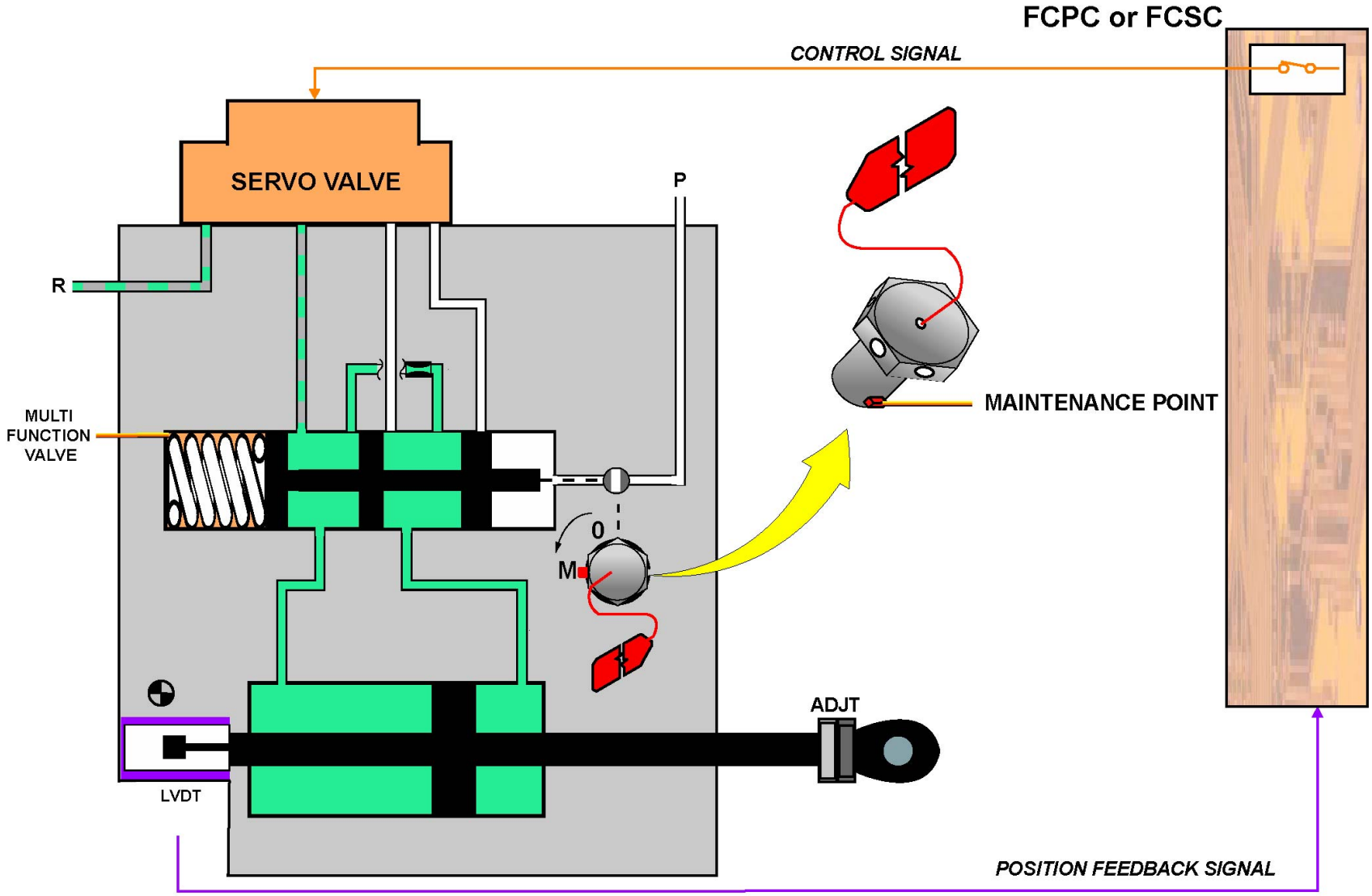

SERVO CONTROL PRINCIPLES - MANUAL MODE

G7508471 - G3NT1T0 - FM27D5F27FM0403

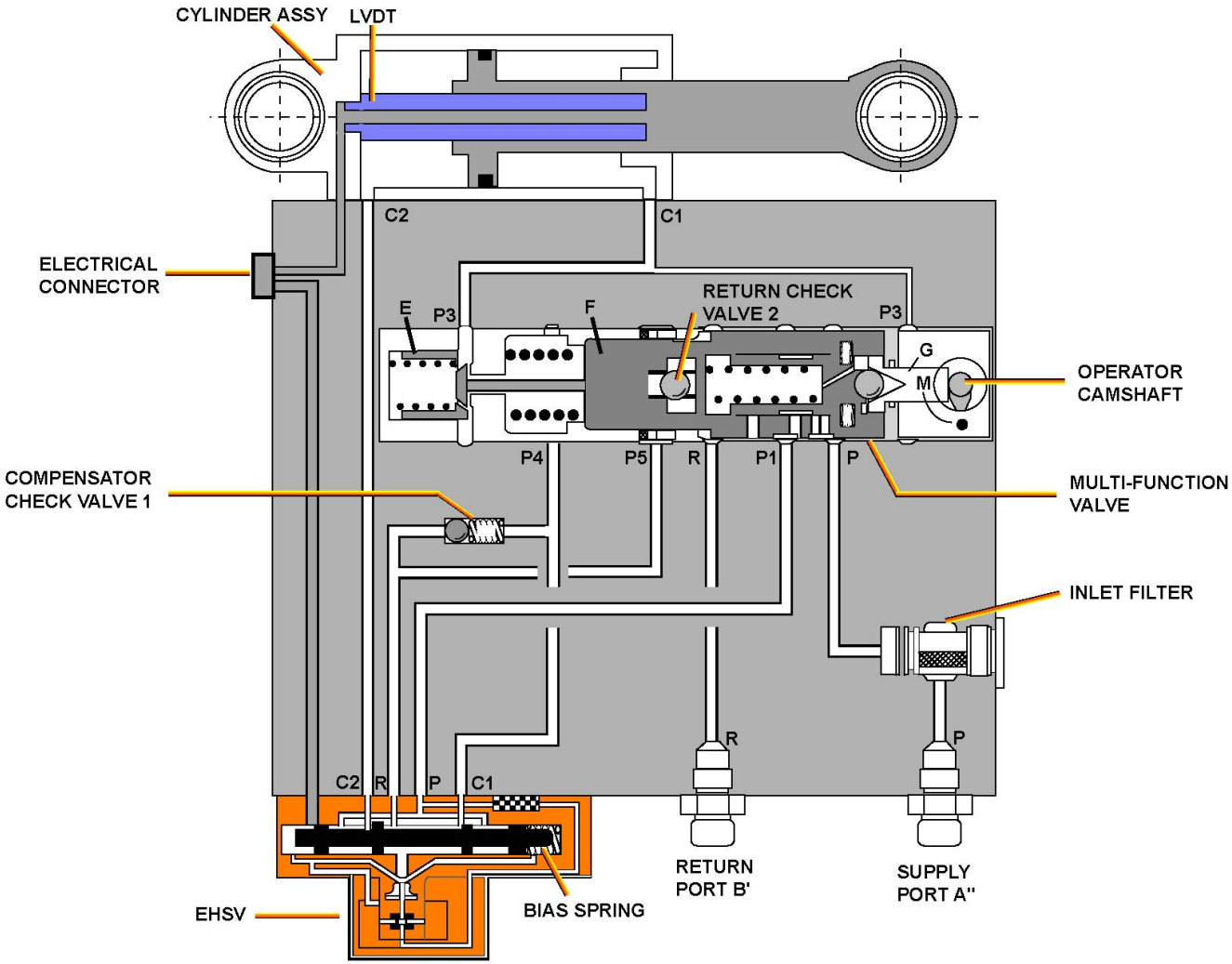

SERVO CONTROL PRINCIPLES - MANUAL MODE

G7508471 - G3NT1T0 - FM27D5F27FM0403

This Page Intentionally Left Blank

G7508471 - G3NT1T0 - FM27D5F27FM0403

SECONDARY CTL SLAT & FLAP TRANSMISSION D/O (3)

GENERAL

The secondary control SLAT and FLAP transmission includes
- SLATS
- FLAPS
- APPUs
- FPPUs
- IPPUs
- SFCCs
- WTBs
- Valve blocks
- Motors
- POBs
- Differencial gearboxes
- Rotary actuators

G7508471 - G3NT1T0 - FM27D600000002

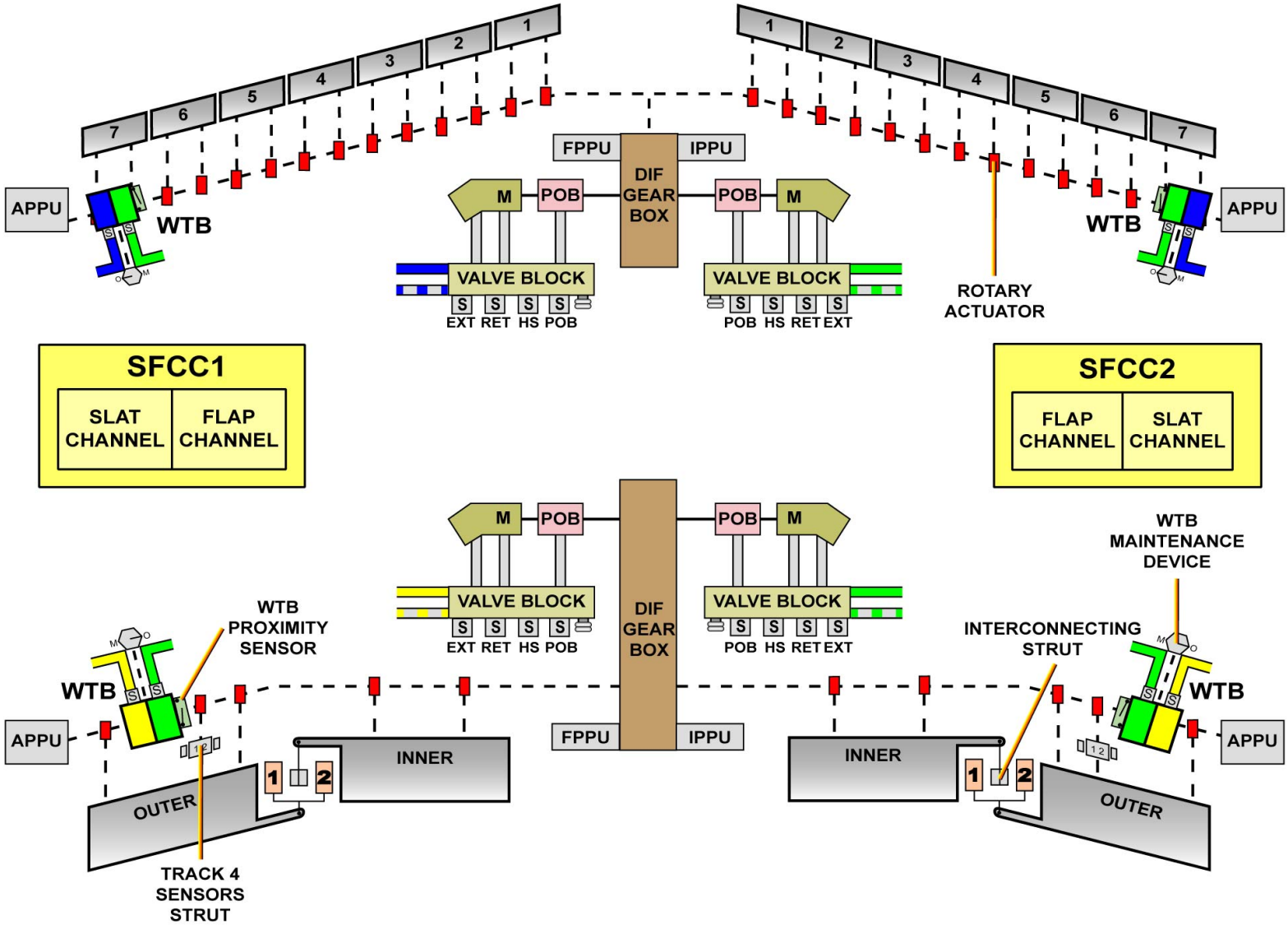
1
2
3
4
5
6
7
APPU
WTB
FPPU
IPPU
DIF GEAR BOX
M
POB
VALVE BLOCK
S S S S
EXT RET HS POB
POB HS RET EXT
ROTARY ACTUATOR
SFCC1
SLAT CHANNEL
FLAP CHANNEL
SFCC2
FLAP CHANNEL
SLAT CHANNEL
WTB MAINTENANCE DEVICE
WTB PROXIMITY SENSOR
INTERCONNECTING STRUT
INNER
OUTER
TRACK 4 SENSORS STRUT

GENERAL

SECONDARY CTL SLAT & FLAP TRANSMISSION D/O (3)

CONTROL LEVER/COMMAND SENSOR UNIT (CSU)

The lever assembly with the quadrant and the spring-loaded plunger has five-position gate (0, 1, 2, 3, FULL). A plate above the first and third notches gives two stops, which determines the take-off and landing range selections

To move the lever, lift the collar against the spring pressure. The pin comes clear of the notch. To move the lever past the stop, lower the collar again. This prevents full travel of the lever in one movement.

The CSU is a sealed unit below the control lever, which changes the mechanical commands from the slat/flap control lever to electrical commands to the SFCCs.

G7508471 - G3NT1T0 - FM27D600000002

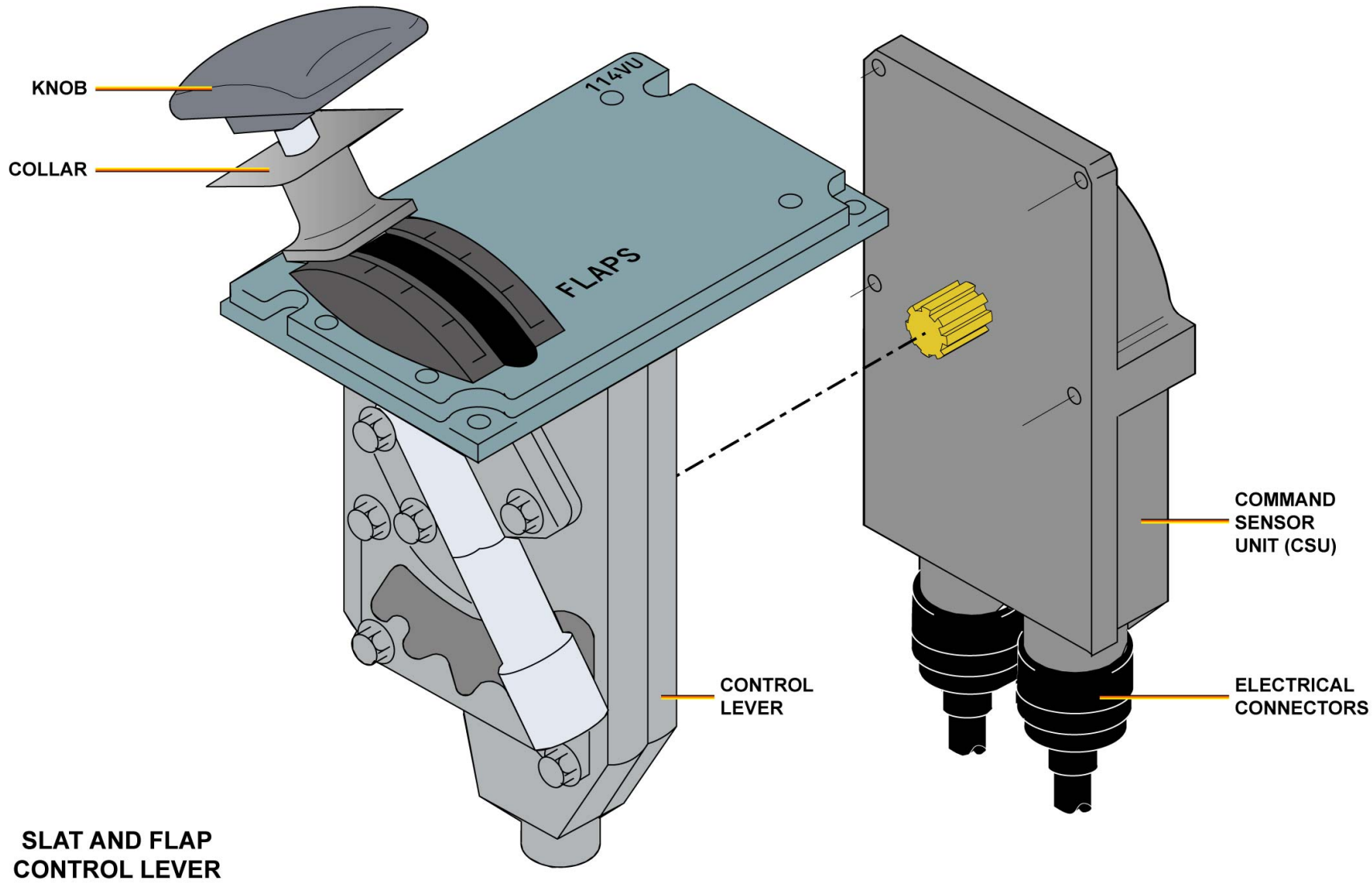

CONTROL LEVER/COMMAND SENSOR UNIT (CSU)

G7508471 - G3NT1T0 - FM27D600000002

SECONDARY CTL SLAT & FLAP TRANSMISSION D/O (3)

SLAT AND FLAP CONTROL COMPUTER (SFCC)

Located in the avionic bay, each computer has two channels, one for the slats, one for the flaps. Each channel has two lanes (lane A and lane B).
Each channel has its own 28 V DC power unit.
Each channel of both SFCCs permanently cross talk to validate their inputs.
SFCC1 is in charge of the Slat channel using the Green hydraulic system and the Flap channel using the Yellow hydraulic system. SFCC 2 is in charge of the Slat channel using the Blue hydraulic system and the Flap channel using the Green hydraulic system.

G7508471 - G3NT1T0 - FM27D600000002

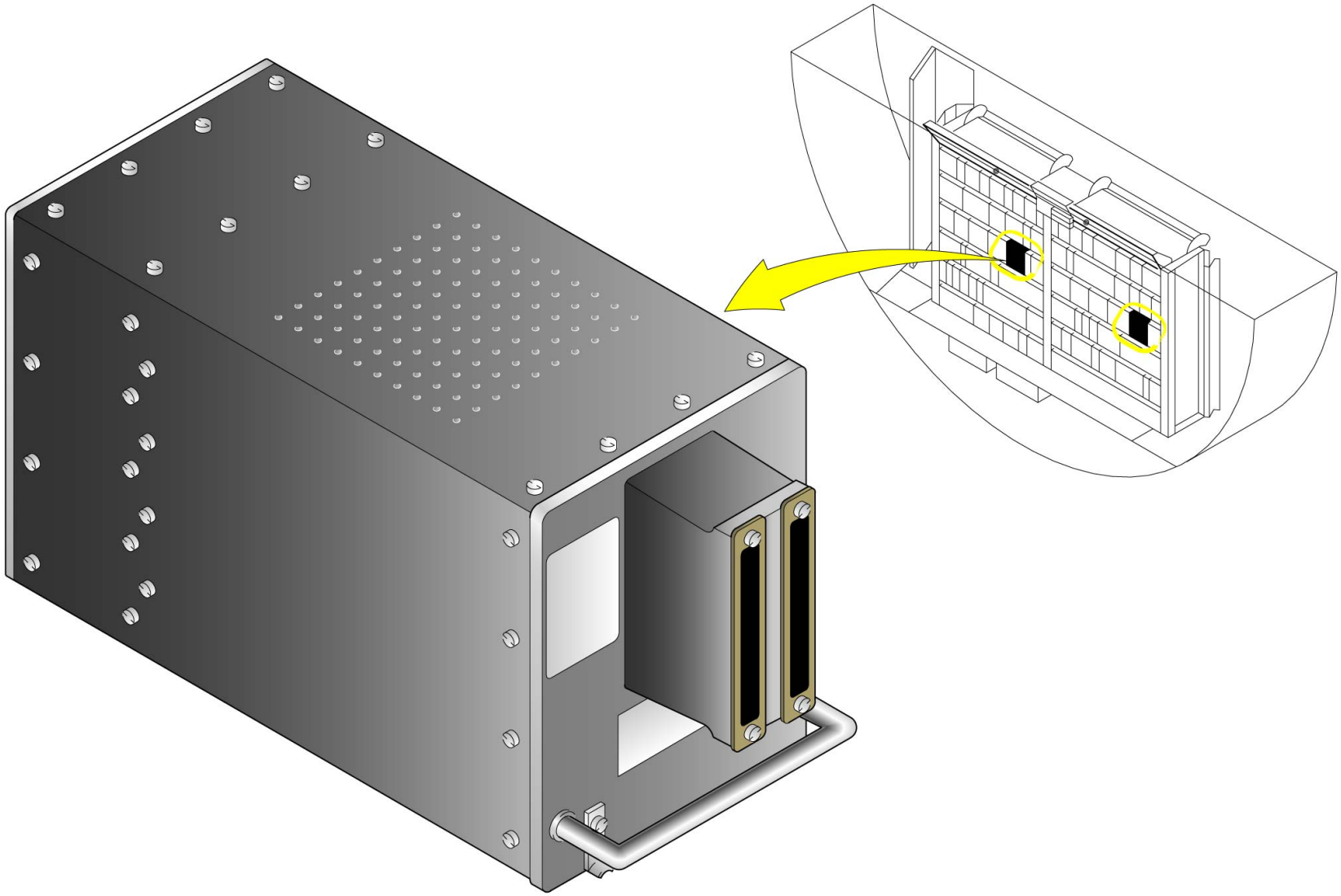

SLAT AND FLAP CONTROL COMPUTER (SFCC)

G7508471 - G3NT1T0 - FM27D600000002

SECONDARY CTL SLAT & FLAP TRANSMISSION D/O (3)

POWER CONTROL UNIT (PCU)

The PCUs drive the transmission system and transmit power through the torque shafts down to the Wing Tip Brakes/APPUs.
The PCU incorporates two differentially coupled hydraulic motors, supplied by two separate hydraulic sources via two individual electrically supplied valve blocks.
If one motor is inoperative, the remaining one provides full output torque but the transmission system operates at half of the normal operation speed.
PCUs have two valve blocks, which are electrically controlled.
Each valve block controls the flow of hydraulic fluid to its related hydraulic motor and POB. The two valve blocks are the same and interchangeable.
The valve blocks of the flap PCU have the same components as those of the slat PCU. The flap PCU valve blocks are interchangeable with those of the slat PCU.
The primary components of a valve block are:
- four solenoid valves,
- a pressure switch,
- a pressure maintain valve,
- a main control valve,
- an inlet filter,
- a pressure port,
- a return port,
- an electrical connector.

The four solenoid valves are referred to as:
- extend solenoid valve,
- retract solenoid valve,
- high-speed solenoid valve,
- POB solenoid valve.

The four solenoid valves of the PCUs are the same and interchangeable. They are not interchangeable with the solenoid valves of the wing tip brakes.

G7508471 - G3NT1T0 - FM27D600000002

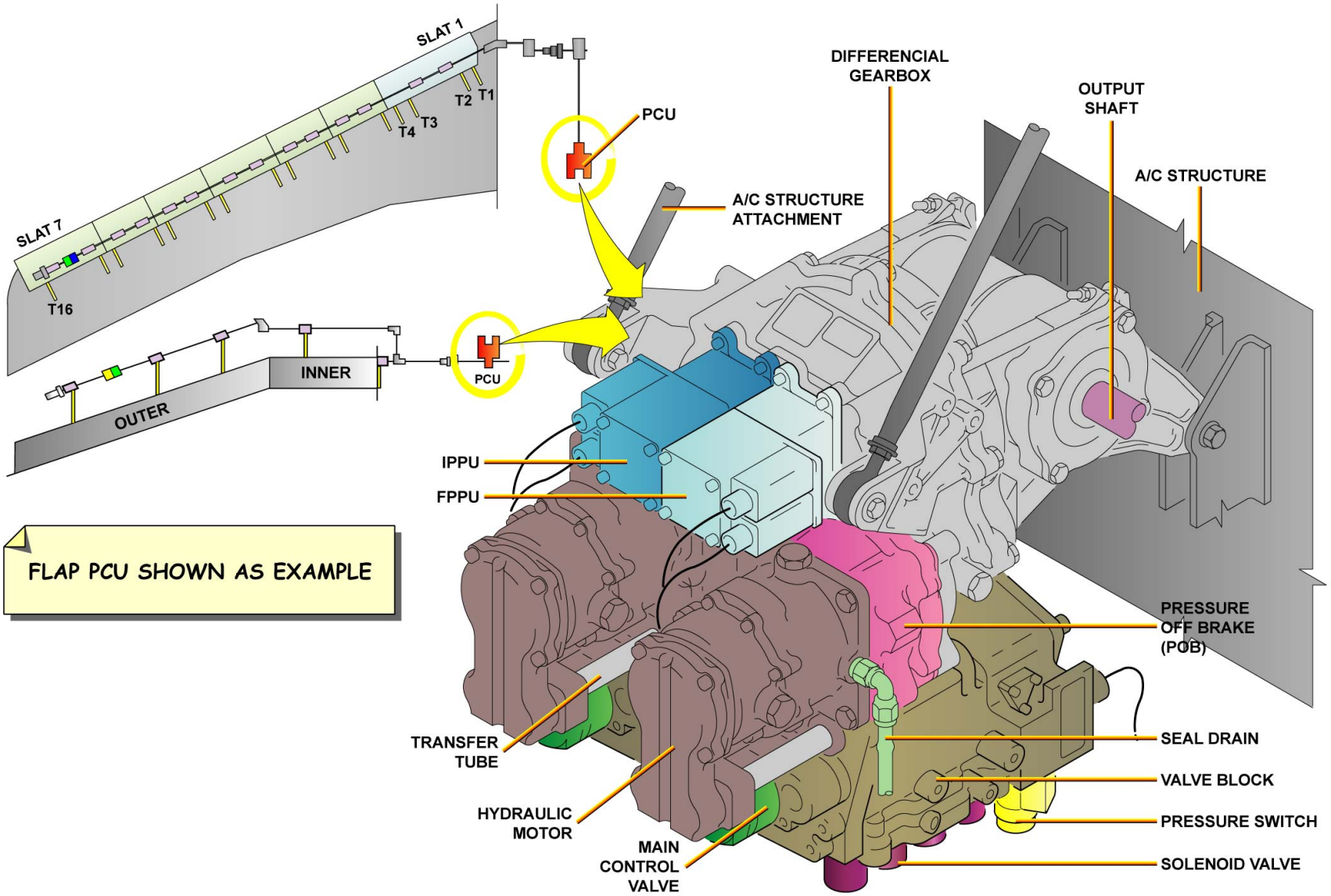

POWER CONTROL UNIT (PCU)

G7508471 - G3NT1T0 - FM27D600000002

SECONDARY CTL SLAT & FLAP TRANSMISSION D/O (3)

POSITION PICK OFF UNITS (IPPU/FPPU/APPU)

Position Pick-off Units (PPU) consist of duplicated synchro transmitters driven by a single input shaft through a reduction gearing. A Feedback Position Pick off Unit (FPPU) and an Instrumentation Position Pick off Unit (IPPU) are mounted on each PCU gearbox casing. Asymmetry Position Pick-off Units (APPU) are mounted on the aircraft structure via adaptator assemblies at the LH and RH ends of the transmissions.
FPPUs and APPUs send transmission position data to the SFCCs. These data are used for system monitoring. IPPU send position data to the Flight Warning Computers (FWC) for display on the ECAM.
PPUs are hermetically sealed and their internal gearing is lubricated for life. A transparent window, located in the cover plate allows zero adjustment through a system of matching marker lines, in the casing and on the rotating shaft. A spring-loaded locking plate holds the splined input shaft when PPU is removed. When installed on aircraft, PPU mounting pushes the locking plate clear of the spline shaft.
FPPUs, IPPUs and APPUs are identical and interchangeable.

G7508471 - G3NT1T0 - FM27D600000002

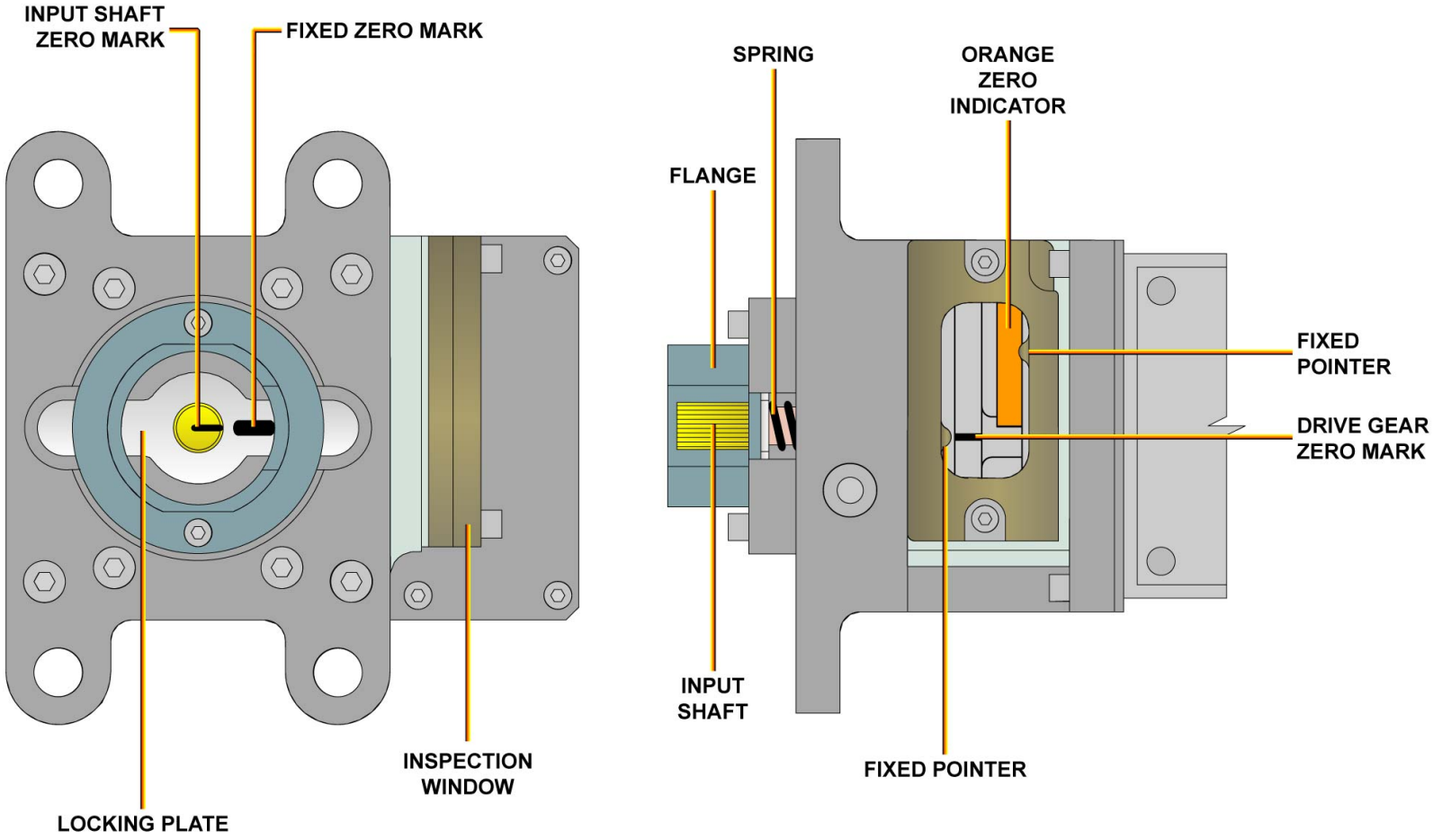

POSITION PICK OFF UNITS (IPPU/FPPU/APPU)

G7508471 - G3NT1T0 - FM27D600000002

SECONDARY CTL SLAT & FLAP TRANSMISSION D/O (3)

SYSTEM TORQUE LIMITERS

In order to prevent too much load from being transmitted to the structure, system torque limiters are installed in the torque shaft assemblies. A lockout indicator senses relative motion between the input and output shafts and pops out when an over torque occurs.

G7508471 - G3NT1T0 - FM27D600000002

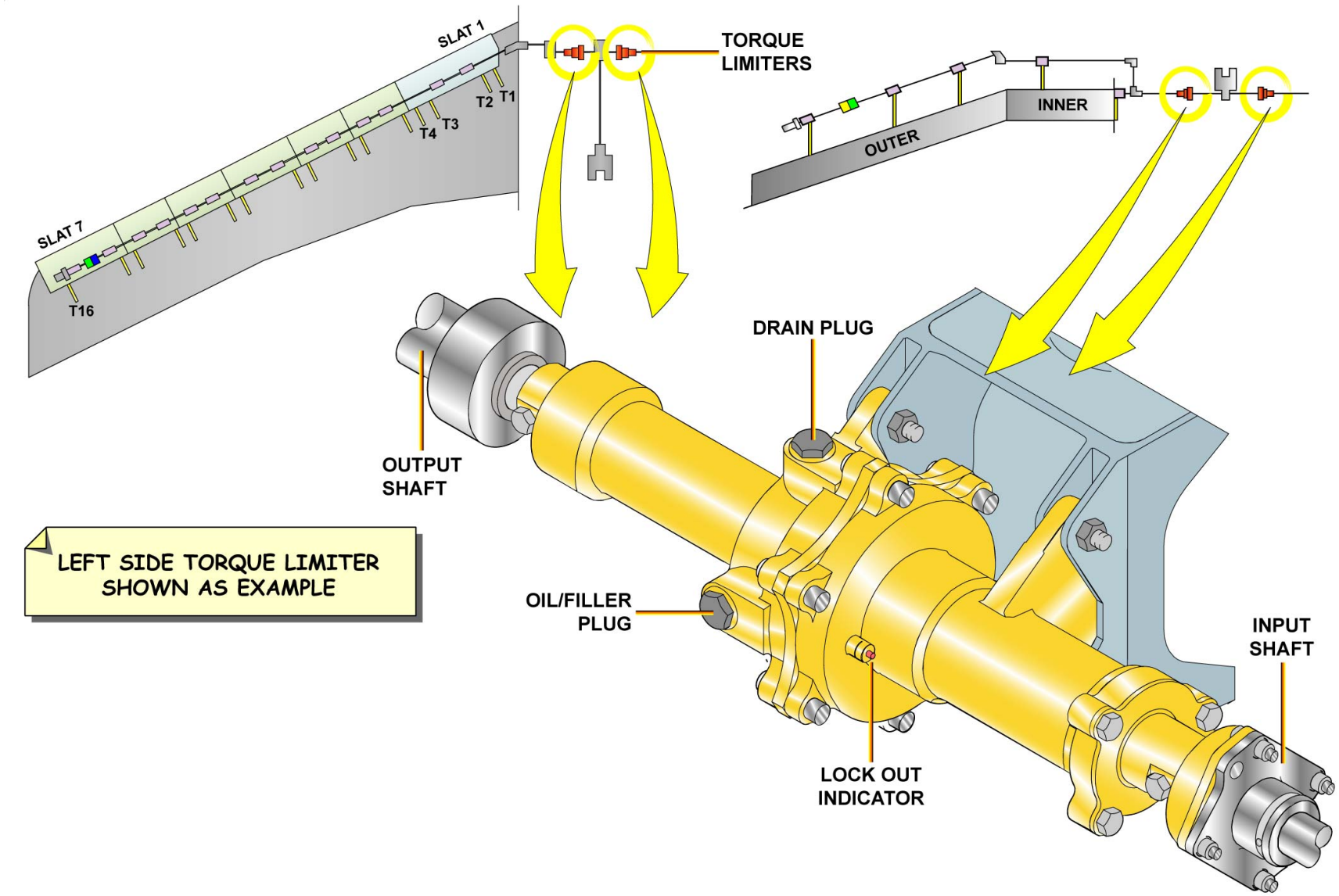

SYSTEM TORQUE LIMITERS

G7508471 - G3NT1T0 - FM27D600000002

SECONDARY CTL SLAT & FLAP TRANSMISSION D/O (3)

TORQUE SHAFTS/SLAT TRACKS

The gearboxes and actuators are driven from the PCU by the torque shafts, which are connected through universal joints and supported in steady bearings. The universal joints permit small angular changes of alignment. Slat 1 is supported by four tracks but only tracks 2 and 3 are driven. Slats numbers two to seven are supported by two driven tracks.
All tracks are guided in vertical-load and side-load rollers. The tracks are of inverted U section type. They retract through holes in the front spar into a sealed container, which makes a projection into the fuel tank.

G7508471 - G3NT1T0 - FM27D600000002

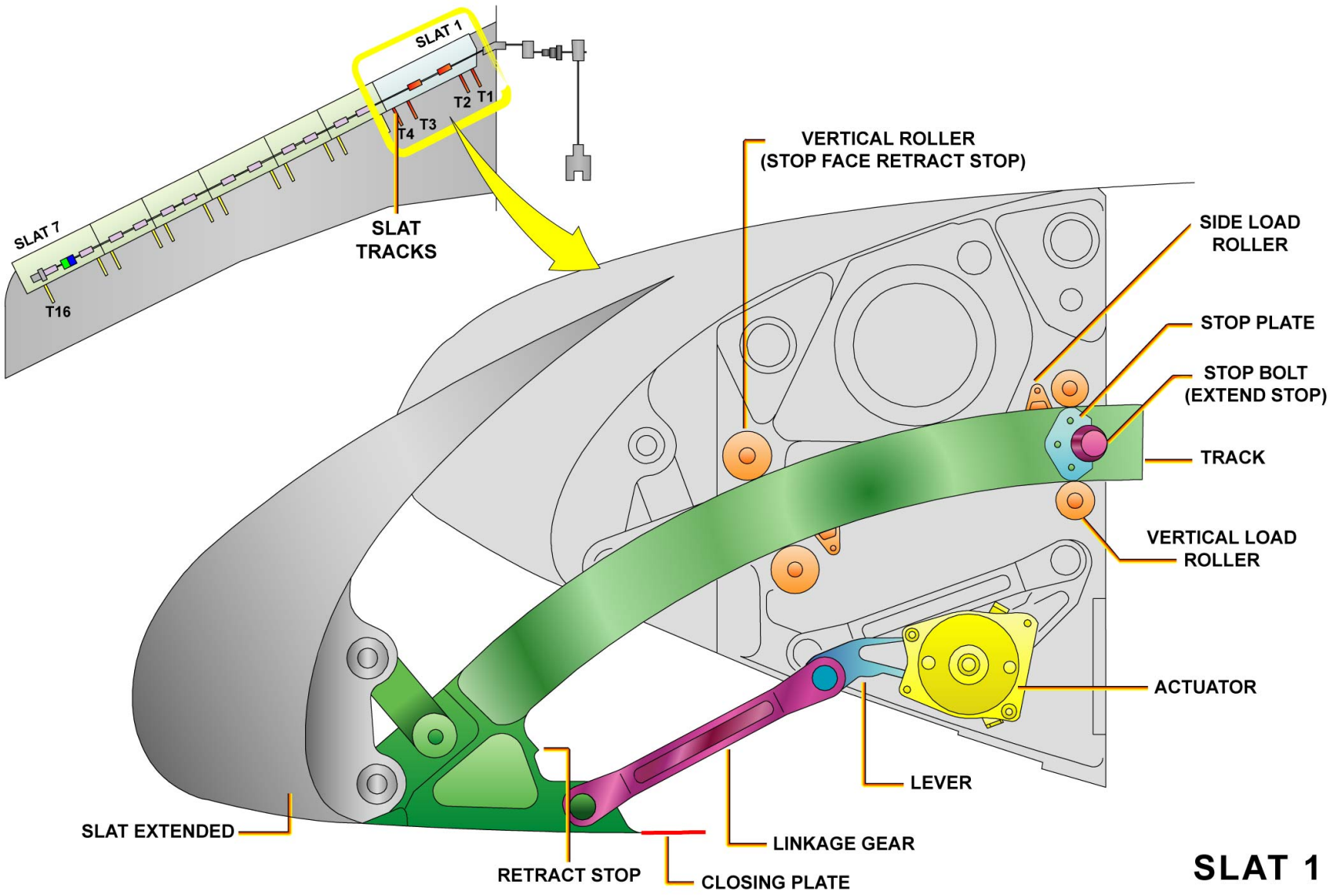

TORQUE SHAFTS/SLAT TRACKS

G7508471 - G3NT1T0 - FM27D600000002

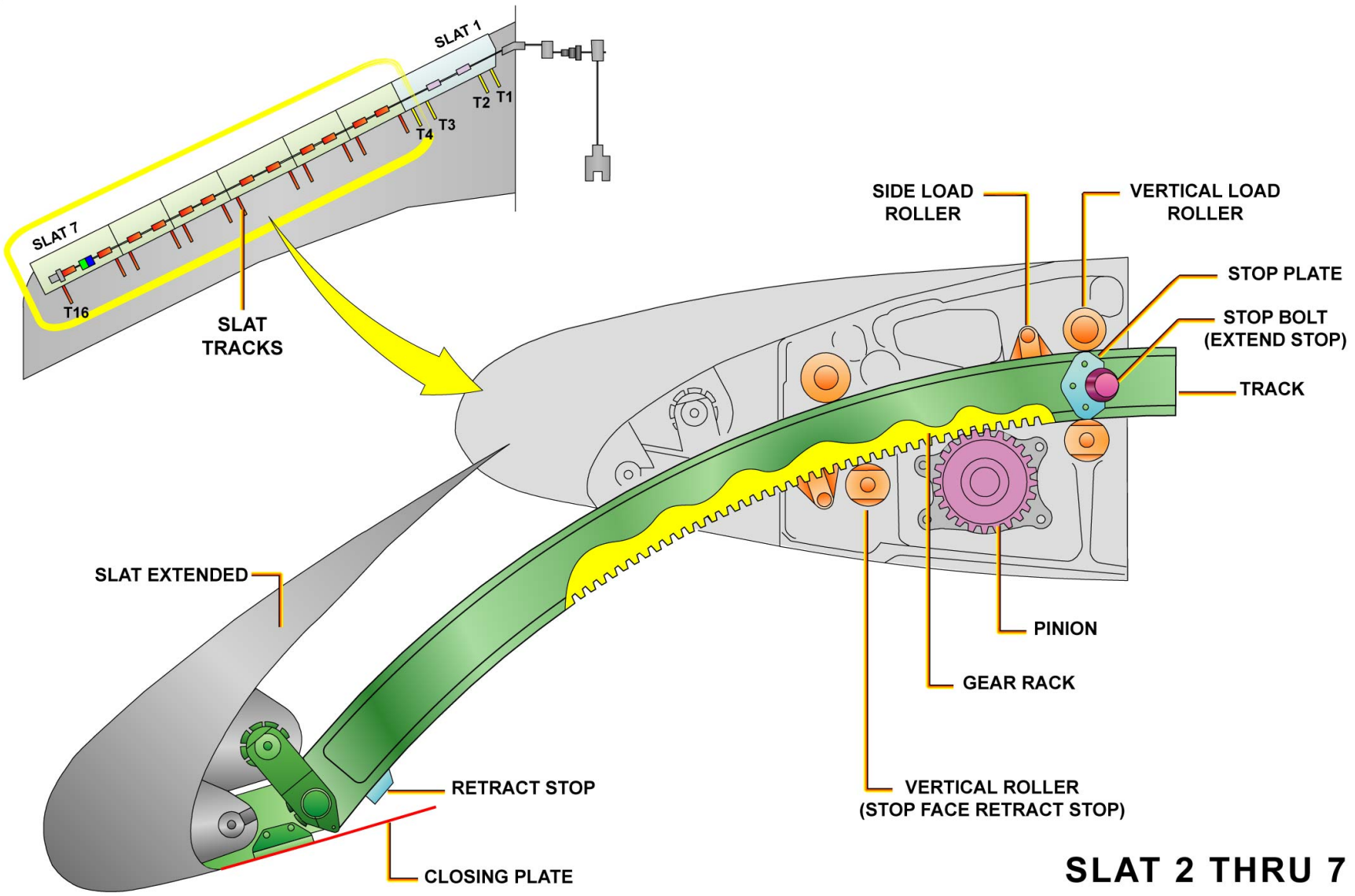

TORQUE SHAFTS/SLAT TRACKS

G7508471 - G3NT1T0 - FM27D600000002

This Page Intentionally Left Blank

G7508471 - G3NT1T0 - FM27D600000002

SECONDARY CTL SLAT & FLAP TRANSMISSION D/O (3)

SLAT TYPE A ACTUATOR

Type A actuators, installed on tracks 2 and 3, are coupled to the inboard slat section 1, via a lever/linkage mechanism.
They are larger in size and torque capacity than type B and have an additional stage reduction gear assembly.
An integrated torque limiting assembly protects the structure against torque generated during a system locking or jamming.
It is built with a preloaded setting value related to actuator type and loading requirement and a lock out indicator is provided.
Actuator A is designed for lubrication of the gear stages only, via a grease nipple, the torque limiter section remaining grease free.
A vent assembly allows surplus grease to exude.
It can be interchanged with the blanking plug to be in the lowest point when installing the actuator.
Inspection plugs are provided in the housing, two on the torque limiter chamber and two on the input-gearing chamber, so that whatever the installed position on aircraft, the drainage is at the lowest point. Lubricant condition can also be checked.

G7508471 - G3NT1T0 - FM27D600000002

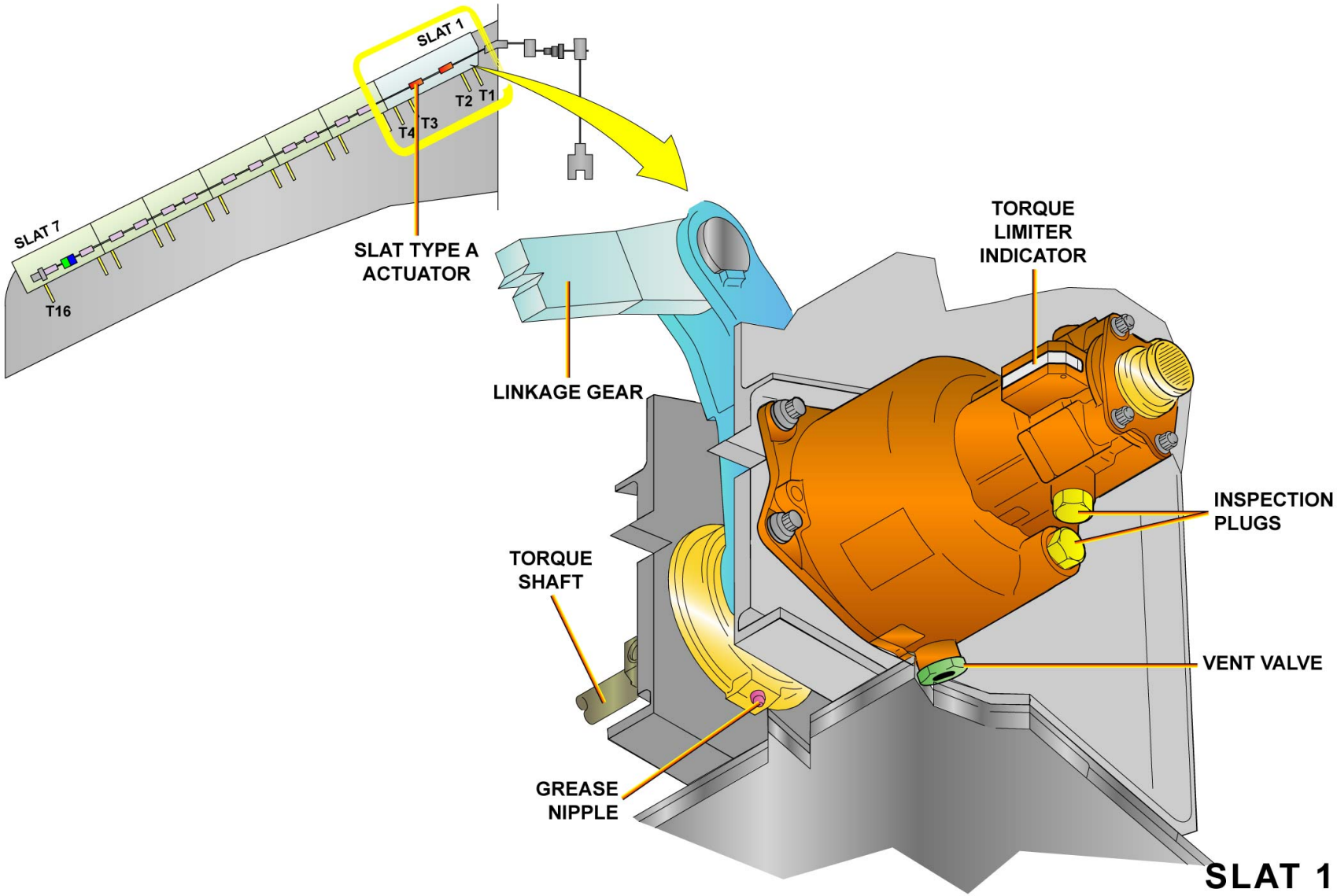

SLAT TYPE A ACTUATOR

G7508471 - G3NT1T0 - FM27D600000002

SECONDARY CTL SLAT & FLAP TRANSMISSION D/O (3)

SLAT TYPE B ACTUATOR

Type B actuators are coupled in pairs to the remaining slat surfaces 2 to 7, via a rack and pinion mechanism.
As type A actuators, they are pure torque devices but are of a different design configuration, being smaller in size and torque capacity and having a simplified gearing arrangement.
As type A actuators, an integrated torque limiter assembly is provided to protect the structure in case of over torque or system jamming.
Actuator B is designed for lubrication of the gear stages only, via a grease nipple, the torque limiter section remaining grease free.
A vent assembly allows surplus grease to exude.
In the torque limiter housing, drainage holes are provided to prevent condensation to collect inside. Drainage points are also provided at the flange-mounting end of the actuator.

G7508471 - G3NT1T0 - FM27D600000002

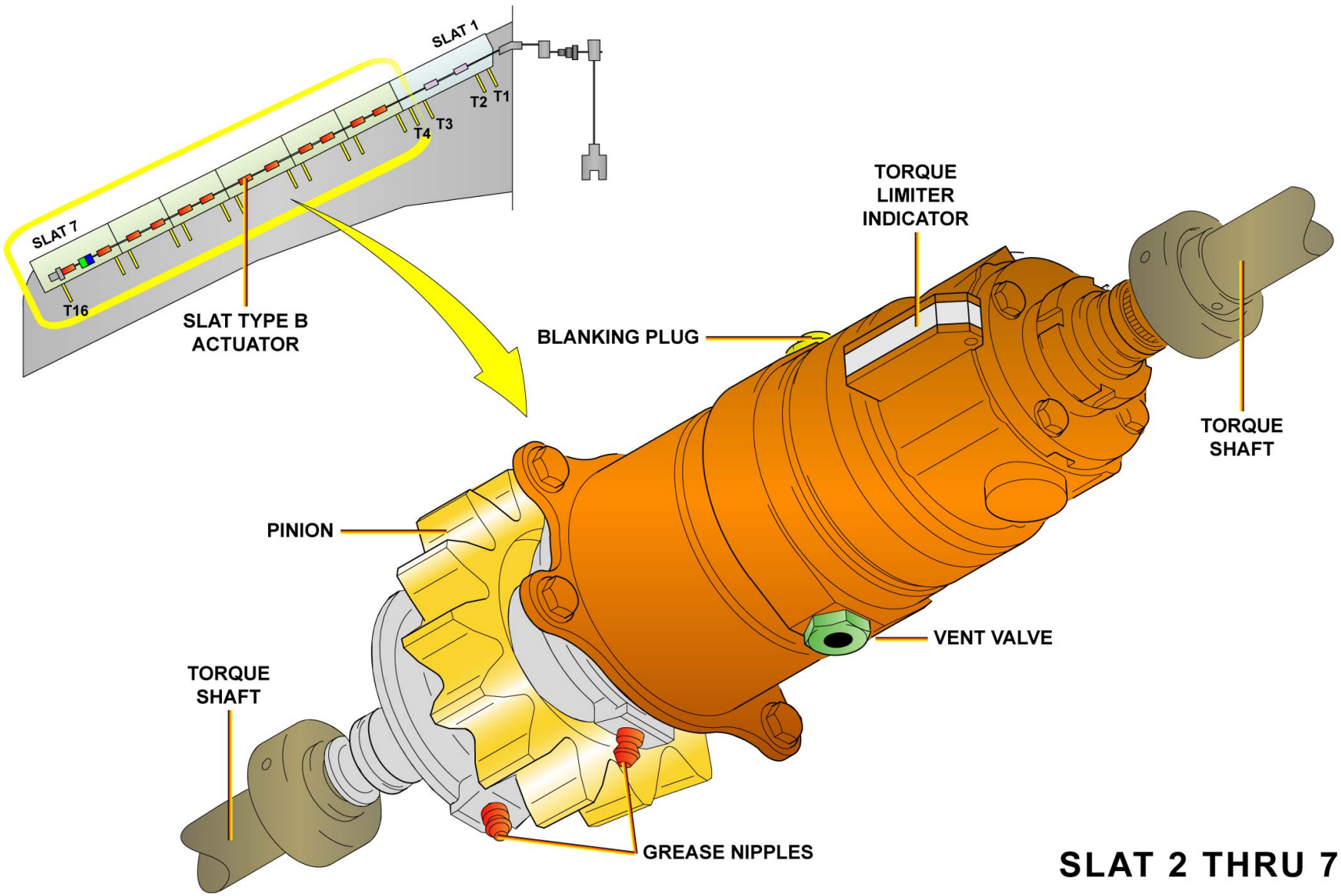

SLAT TYPE B ACTUATOR

G7508471 - G3NT1T0 - FM27D600000002

SECONDARY CTL SLAT & FLAP TRANSMISSION D/O (3)

FLAP TRACKS/FLAP ROTARY ACTUATORS

The flaps are supported on carriages traveling on straight tracks.
The inboard flap is supported on 2 tracks, the outer one on three.
The tracks are connected, with drive arms, to the carriages.
They are of a similar construction except track 1 which is attached to the fuselage and located in the wheel well.
The reduction ratio rotary actuators mounted on the track beams drive the flaps.
Each actuator has an output arm attached either directly to the flap drive linkage (station 1), or to an extension arm connected to the drive linkage.
There are two types of rotary actuator:
- Type A is used at stations 1 and 5.
- Type B, which is of a larger diameter is installed at stations 2, 3 and 4 because of higher aerodynamic loads at these points.

Each actuator has also two possible vent positions, the unused one being blanked off.
The vent position depends on the actuator and each actuator casing is marked appropriately.
The actuators are designed to be "re greased" periodically through a grease nipple after removal of the vent/drain plug.

G7508471 - G3NT1T0 - FM27D600000002

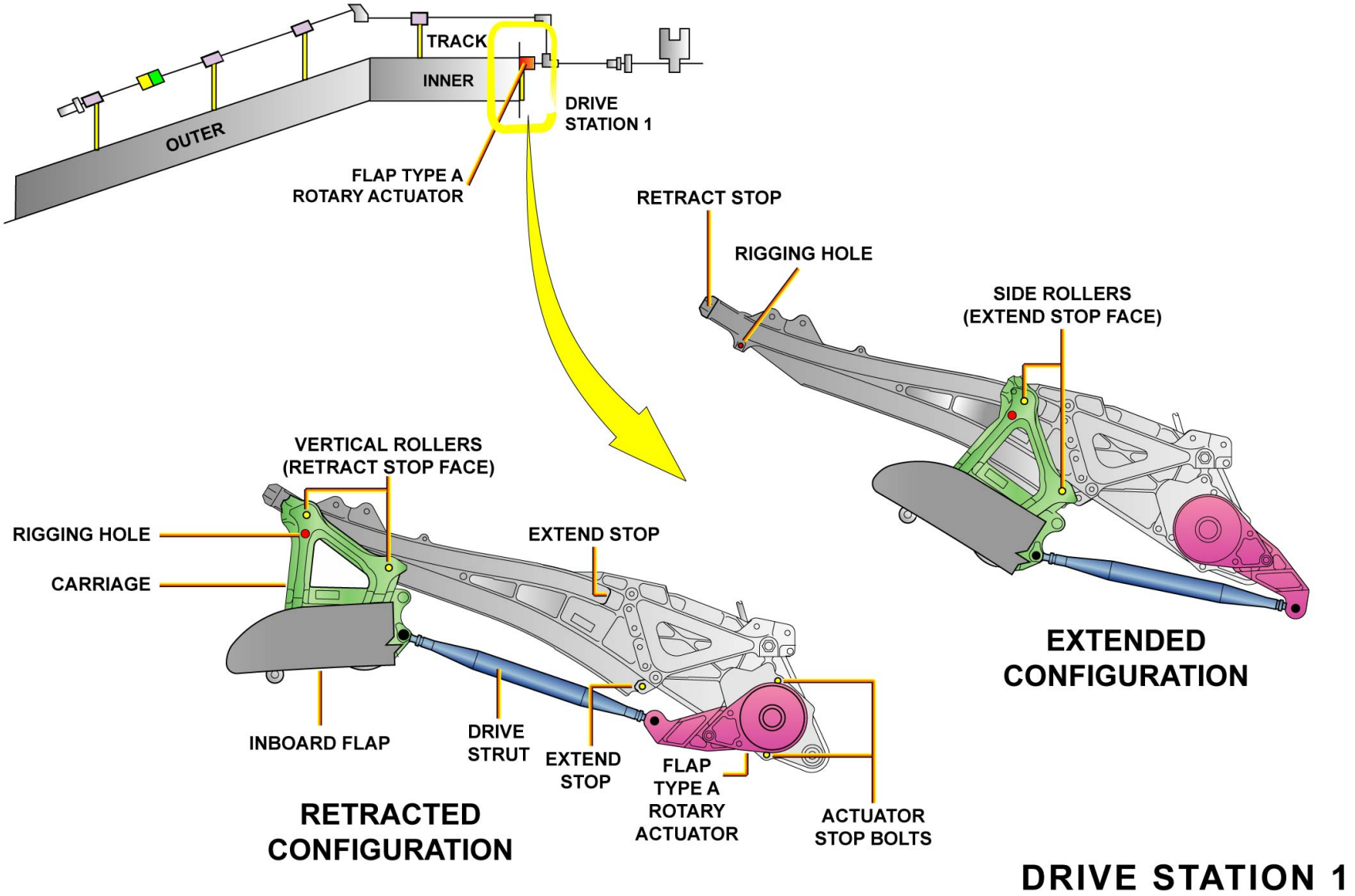

FLAP TRACKS/FLAP ROTARY ACTUATORS

G7508471 - G3NT1T0 - FM27D600000002

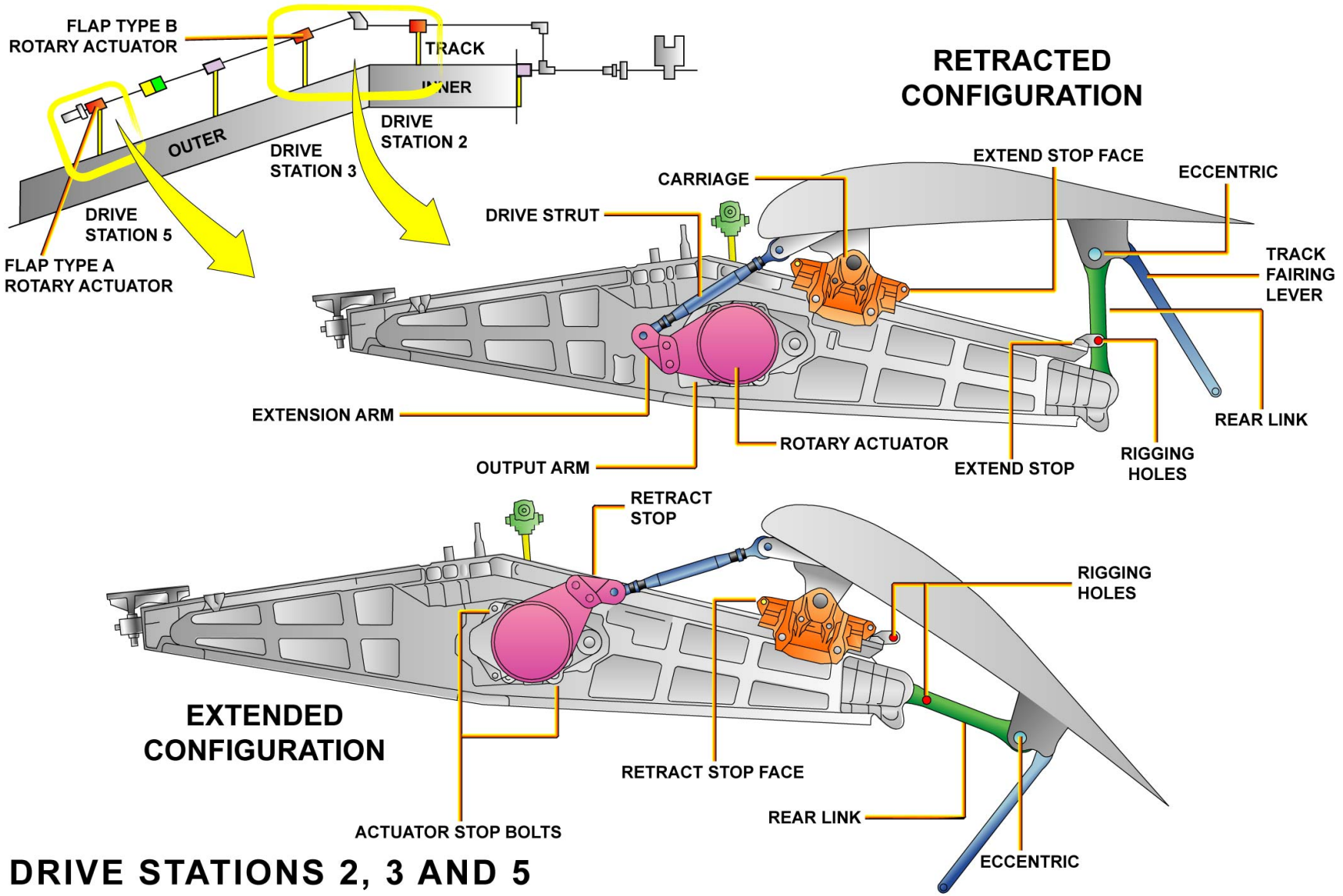

FLAP TRACKS/FLAP ROTARY ACTUATORS

G7508471 - G3NT1T0 - FM27D600000002

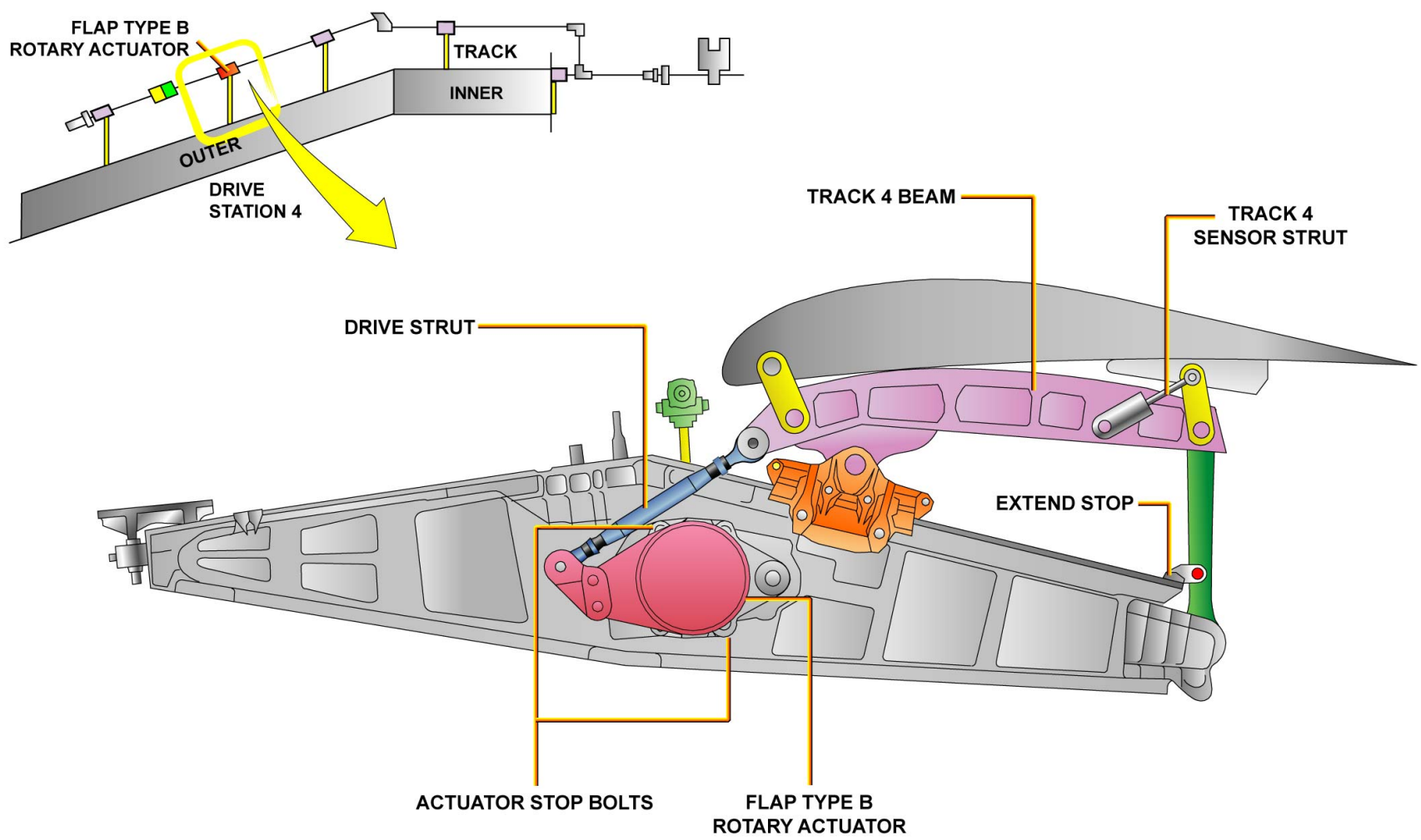

DRIVE STATION 4

FLAP TRACKS/FLAP ROTARY ACTUATORS

G7508471 - G3NT1T0 - FM27D600000002

SECONDARY CTL SLAT & FLAP TRANSMISSION D/O (3)

FLAP INTERCONNECTING STRUT

The interconnecting strut takes up the differential movement between the inner and outer flaps.
In the event of a disconnect (attach breakdown) in drive stations 1, 2 or 3, the disconnect sensors send data to the SFCCs, to indicate that the limit of differential movement has been exceeded.
In that case, the interconnecting strut gives an alternative load path for the flap drive.
The flap interconnecting strut has:
- a housing
- an actuating rod
- a target
- a ball piece
- a sleeve

The target is at the end of the actuating rod.
The two sensors are on the housing to agree with the normal position of the target.
If the target moves out of the normal limits, the sensors send a target far signal to their related SFCCs.

G7508471 - G3NT1T0 - FM27D600000002

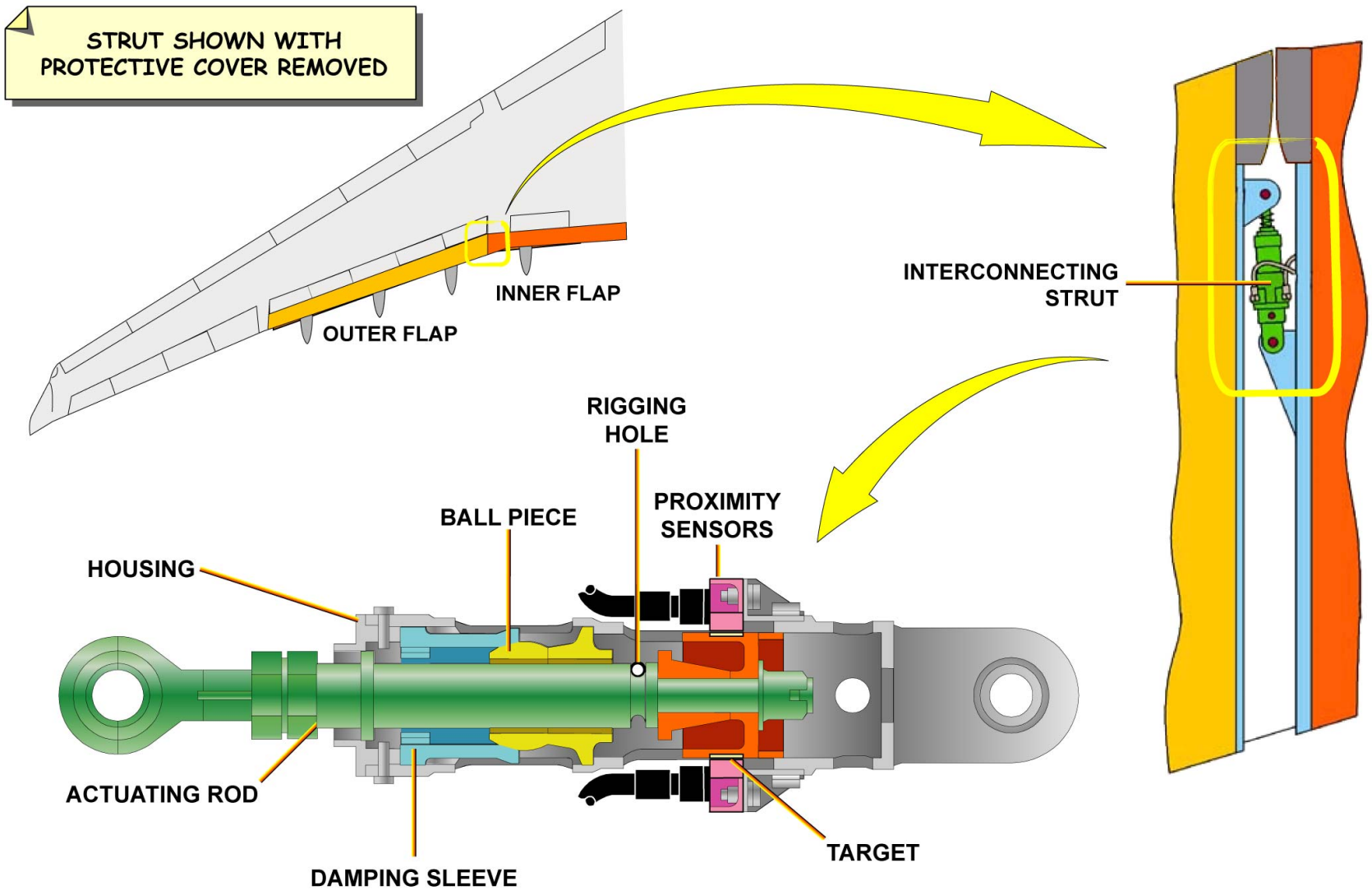

FLAP INTERCONNECTING STRUT

G7508471 - G3NT1T0 - FM27D600000002

SECONDARY CTL SLAT & FLAP TRANSMISSION D/O (3)

FLAP TRACK 4 SENSOR STRUT

The track 4 sensor strut provides information about the relative position of the outer flap to the SFCCs.
Flap track 4 fault is defined as the exceeding of the normal relative movement between the track 4 beam assembly and the flap.
If the drive at station 4 or 5 becomes disconnected, the beam assembly is displaced relative to the flap.
This causes a relative movement in the extend or compression direction between the actuating rod and the sensor housing.
If the target moves out of the normal limits, the sensors send a target far signal to their related SFCCs.

G7508471 - G3NT1T0 - FM27D600000002

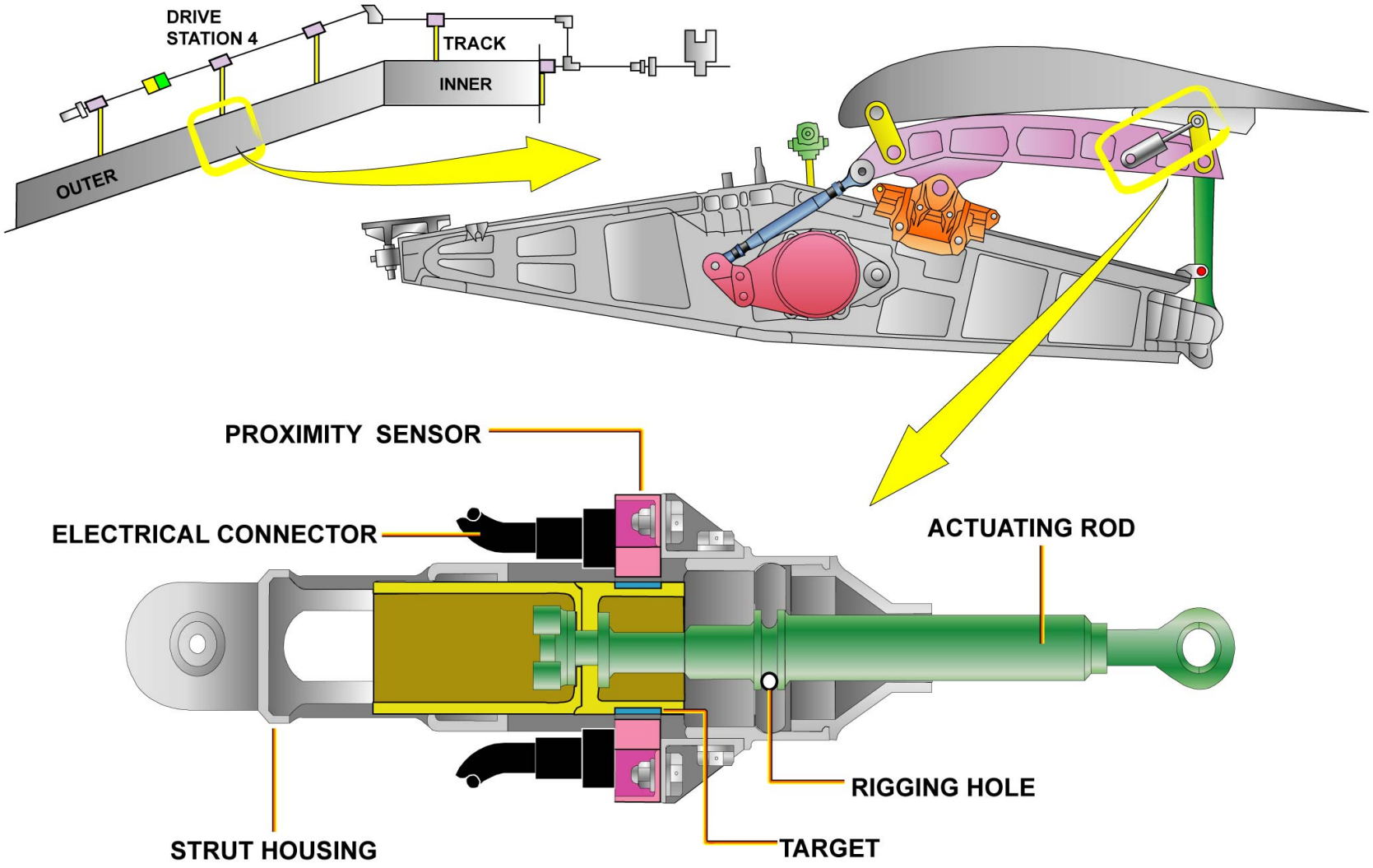

FLAP TRACK 4 SENSOR STRUT

G7508471 - G3NT1T0 - FM27D600000002

SECONDARY CTL SLAT & FLAP TRANSMISSION D/O (3)

WING TIP BRAKE (WTB)

GENERAL VIEW

This is a general view of a Wing Tip Brake (WTB).

G7508471 - G3NT1T0 - FM27D600000002

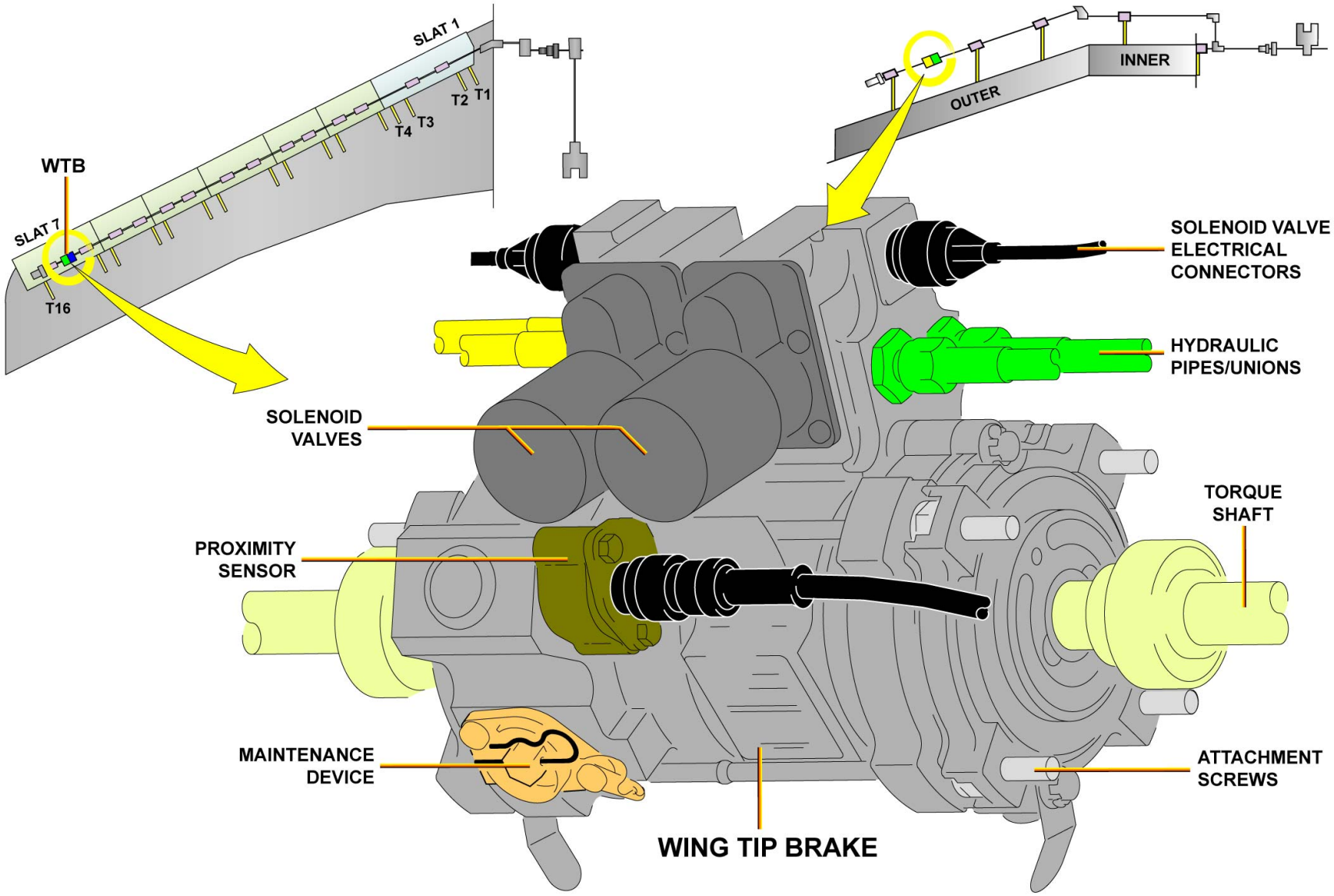

WING TIP BRAKE (WTB) - GENERAL VIEW

G7508471 - G3NT1T0 - FM27D600000002

SECONDARY CTL SLAT & FLAP TRANSMISSION D/O (3)

WING TIP BRAKE (WTB) (continued)

DESCRIPTION

The brake is a "pressure off brake" using a multi plate friction device operated by a spring pack.
Dual hydraulic pistons controlled by two electro hydraulic solenoid valves perform brake release.
The two hydraulic circuits are separated and either one can release the brake.
Brake position is monitored by a proximity sensor used on ground for the WTB engagement test performed from the MCDU.

G7508471 - G3NT1T0 - FM27D600000002

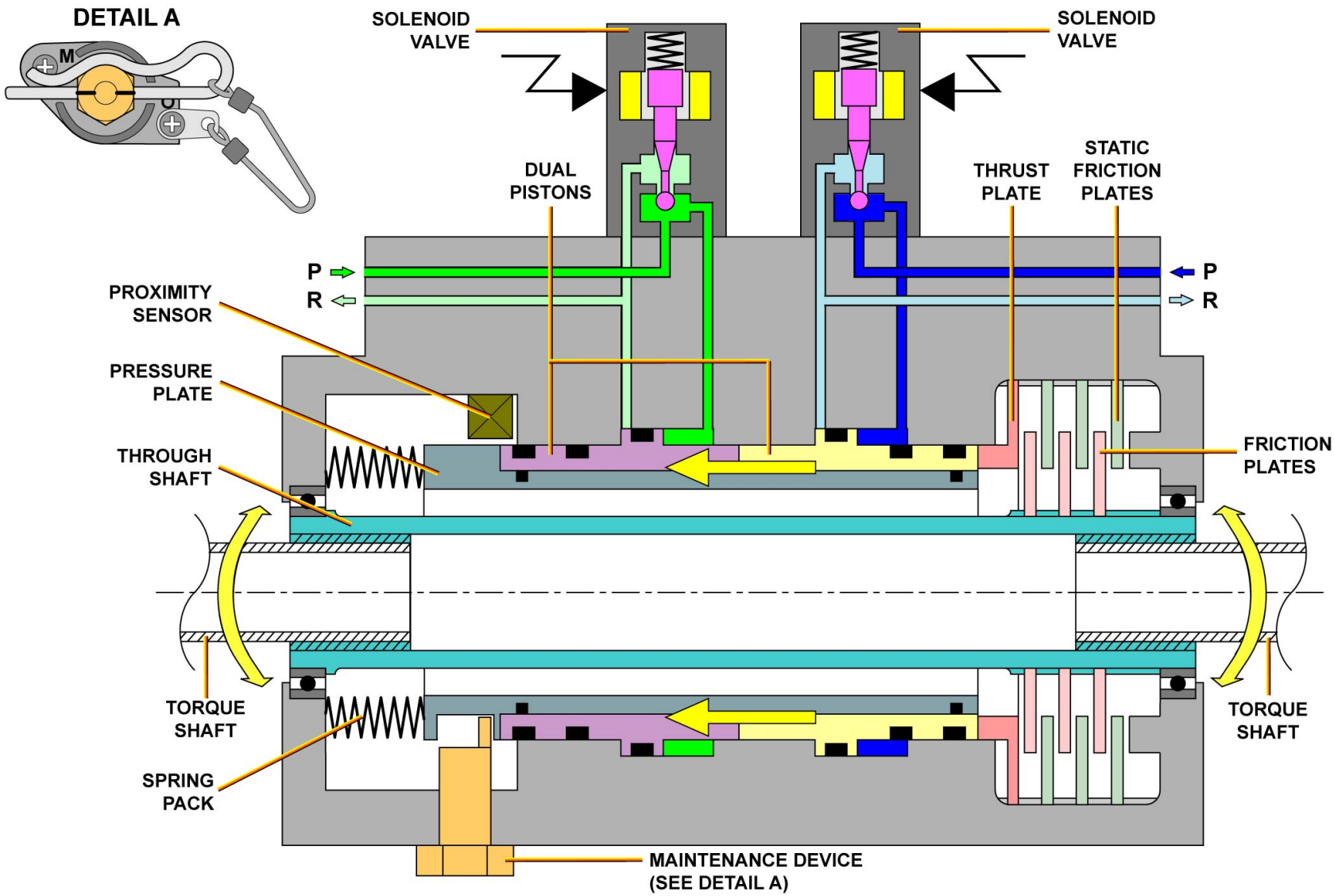

WING TIP BRAKE (WTB) - DESCRIPTION

G7508471 - G3NT1T0 - FM27D600000002

SECONDARY CTL SLAT & FLAP TRANSMISSION D/O (3)

WING TIP BRAKE (WTB) (continued)

MAINTENANCE DEVICE

A manual brake release mechanism is provided for maintenance operation.
Manual release is achieved by rotating the manual release shaft in an anticlockwise direction.
- first withdraw the spring cotter pin, then rotate the release shaft until the indicator arm moves to the "M" (Maintenance) position.
At this point, the brake is off and the transmission through shaft can be rotated.
-Setting the brake to the operational position again is performed by rotating the release shaft clockwise, until the indicator arm is in the "0" (Operational) position.
The release shaft must be in the correct operational position, so that the spring cotter pin can be re-inserted.

G7508471 - G3NT1T0 - FM27D600000002

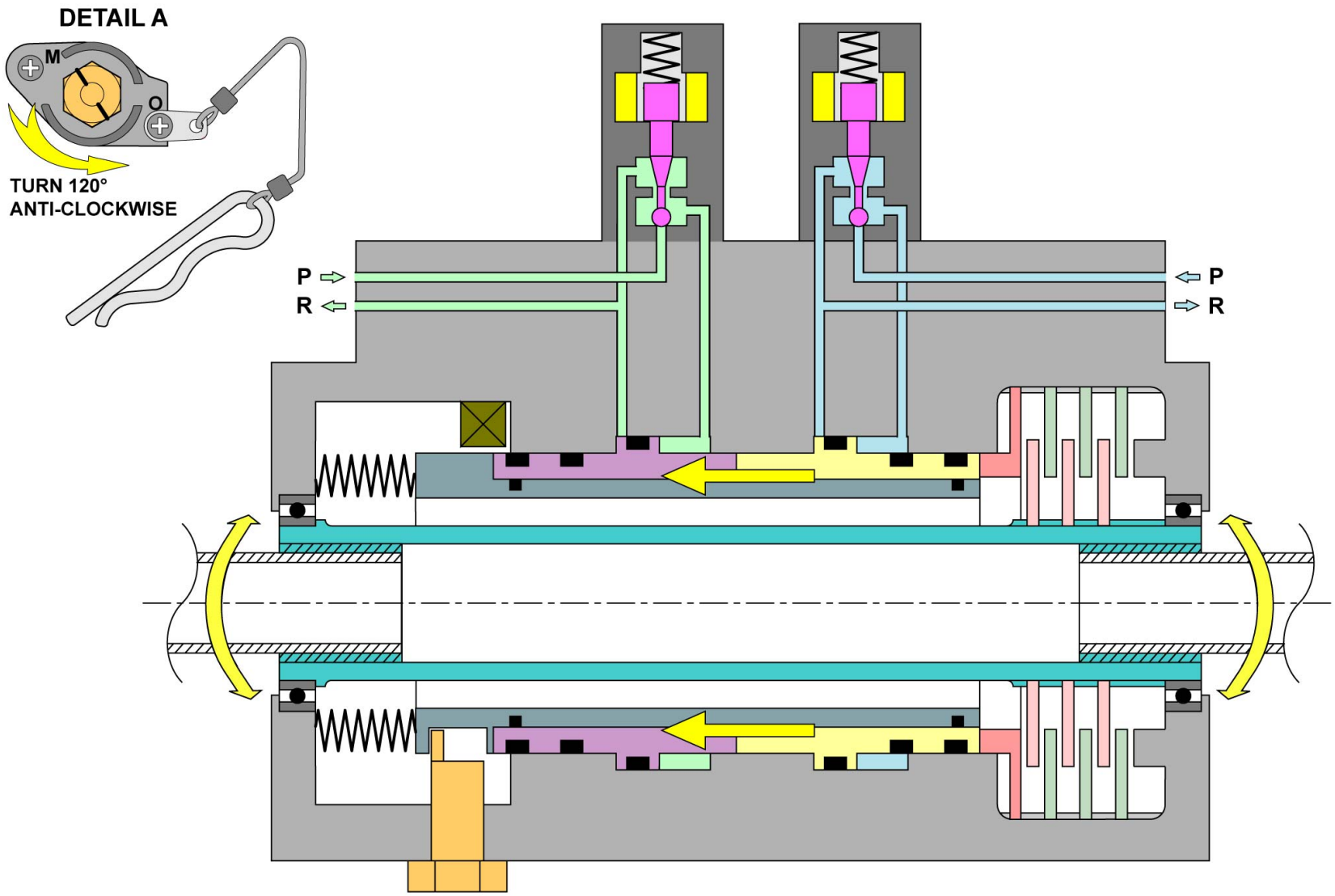

WING TIP BRAKE (WTB) - MAINTENANCE DEVICE

G7508471 - G3NT1T0 - FM27D600000002

SECONDARY CTL SLAT & FLAP NORM OPERATION D/O (3)

GENERAL

The racks in the forward avionics compartment contain the two SFCCs. The SFCCs have power supplies with no relation to each other. Each SFCC has the same function and includes one flap channel and one slat channel. Each channel has 2 lanes. Each valve block has its own different hydraulic supply.
The requirements for normal operation are: aircraft electrical network available, circuit breakers closed and corresponding hydraulic systems pressurized. Thus SFCCs energize the WTB solenoids and WTB are released.
Flaps operation will be explained, Slats operation is similar in principle.
The slat/flap control lever is located in the cockpit. There are five possible positions for the lever (identified as 0, 1, 2, 3 and FULL) which correspond to different slat/flap positions.
When the slat/flap control lever is set to an extended position, The CSU changes the mechanical command signal from the slat/flap control lever into an electrical signal to SFCC1 and SFCC2.

G7508471 - G3NT1T0 - FM27D700000002

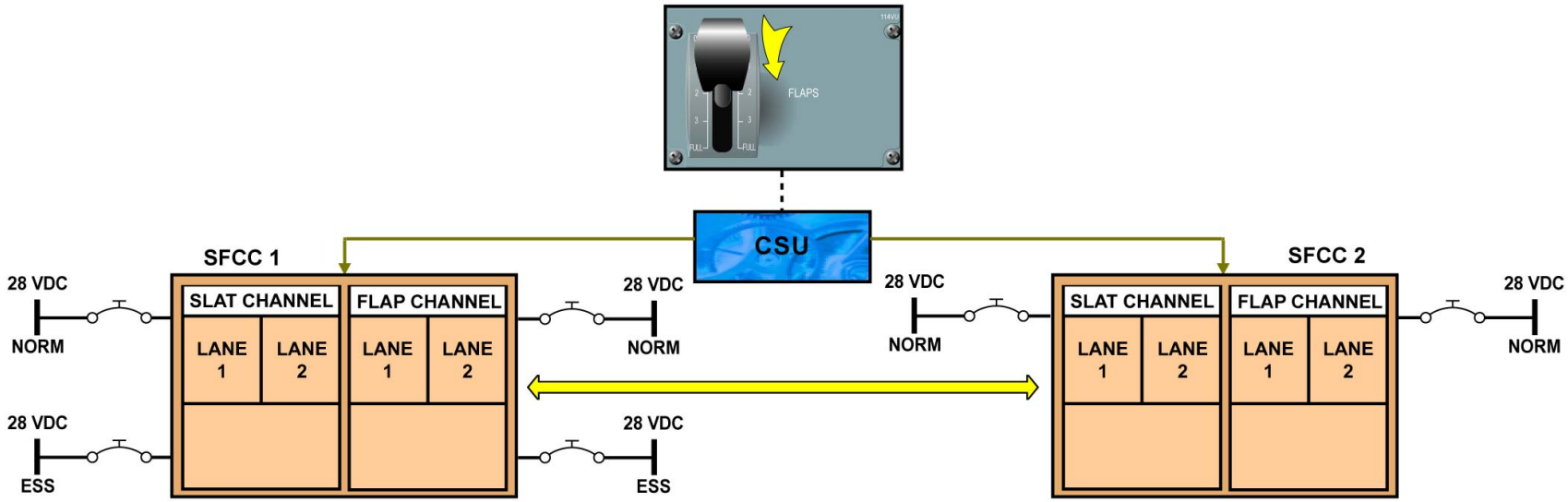
FLAPS
CSU
SFCC 1
SFCC 2
28 VDC
NORM
28 VDC
ESS
SLAT CHANNEL
FLAP CHANNEL
LANE 1
LANE 2
LANE 1
LANE 2
28 VDC
NORM
28 VDC
ESS
28 VDC
NORM
SLAT CHANNEL
FLAP CHANNEL
LANE 1
LANE 2
LANE 1
LANE 2
28 VDC
NORM

GENERAL

SECONDARY CTL SLAT & FLAP NORM OPERATION D/O (3)

PCU STANDBY MODE

During the normal operation SFCC1 and SFCC2 compare the position signals from the CSU and FPPU. The FPPU installed on the PCU, gives information on the position of the transmission to both SFCCs.

G7508471 - G3NT1T0 - FM27D7000000002

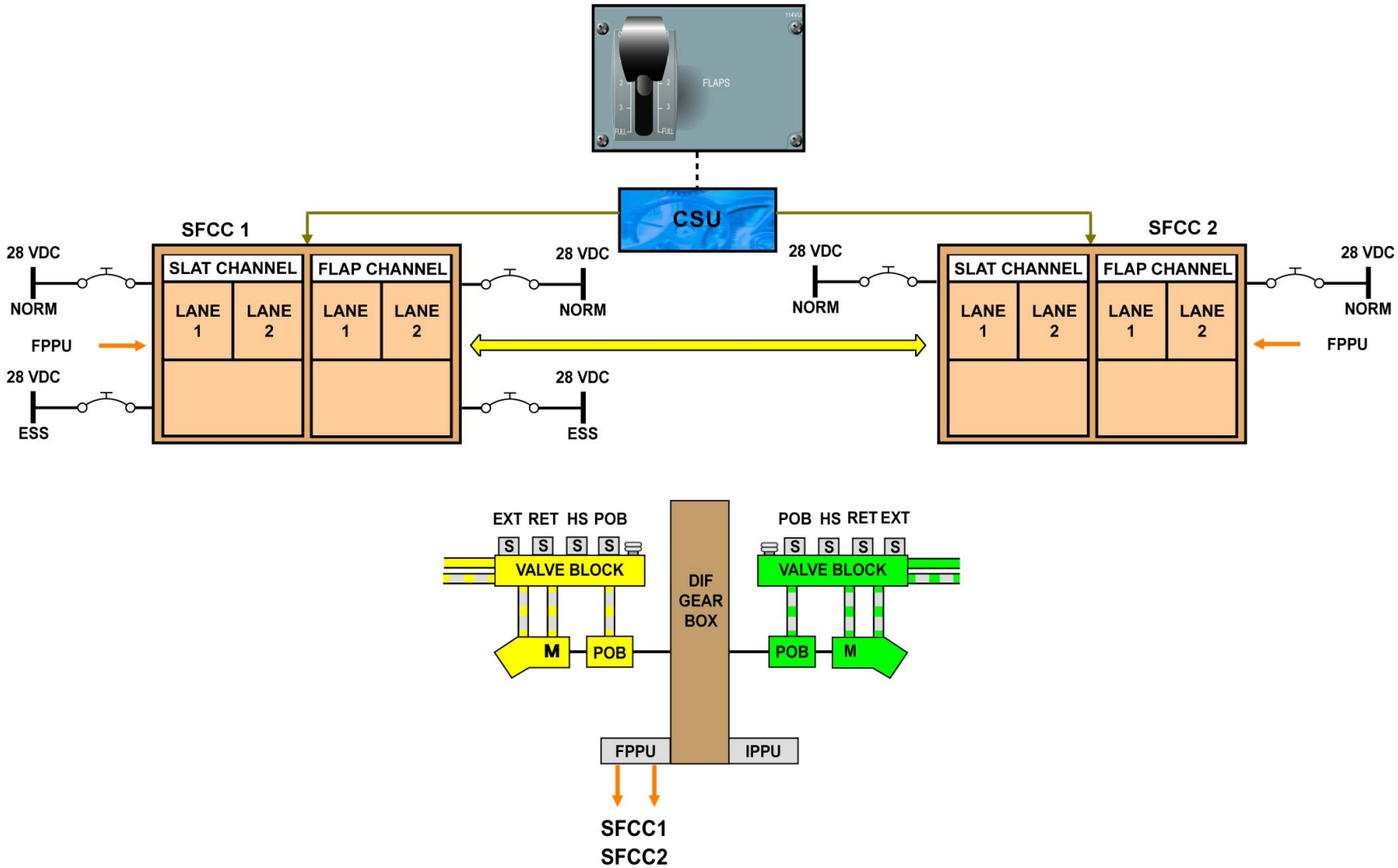

PCU STANDBY MODE

G7508471 - G3NT1T0 - FM27D700000002

SECONDARY CTL SLAT & FLAP NORM OPERATION D/O (3)

PCU START-UP SEQUENCE

When there is a difference between the CSU and FPPU signals, SFCCs send discrete signals to their related solenoid valves mounted on the PCU valve block to achieve movement. The SFCCs take also into account the APPUs and ADIRS inputs. Both lanes in a channel must agree to send signals to their valve blocks.

G7508471 - G3NT1T0 - FM27D7000000002

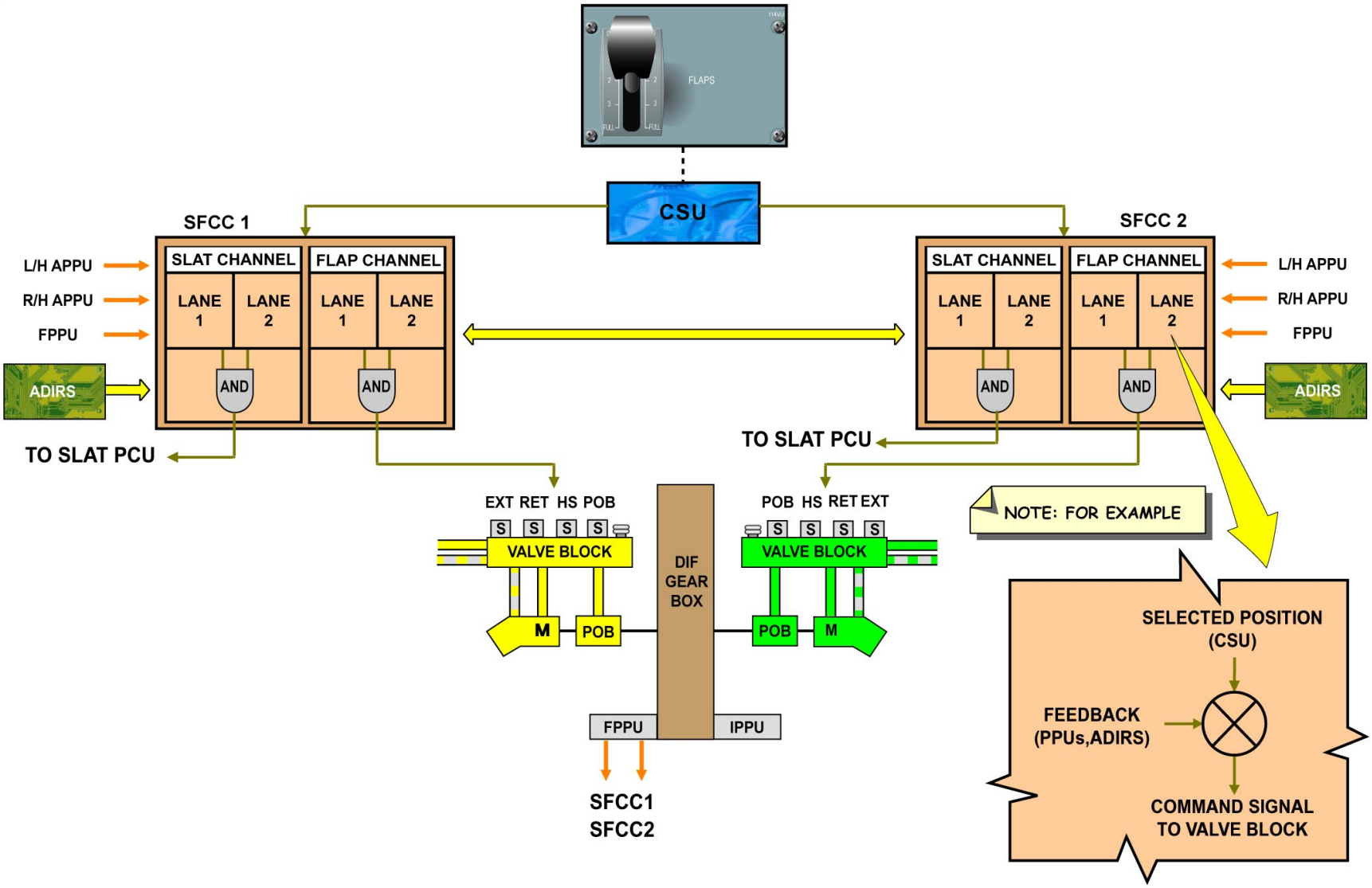

PCU START-UP SEQUENCE

G7508471 - G3NT1T0 - FM27D700000002

SECONDARY CTL SLAT & FLAP NORM OPERATION D/O (3)

POWER CONTROL UNIT SHUT-DOWN SEQUENCE

The two SFCCs monitor:
- the operation of the transmission system,
- the condition of the PCU and WTBs
- the position of the flaps and slats.

They get signals from:
- the FPPU, the two APPU,
- the PCU valve blocks pressure switches,
- the interconnecting strut switches,
- the track 4 proximity switches.

They identify component failures of the transmission and the control systems.

When the SFCCs receive a command to extend the flaps, they energize the extend solenoid valve of each PCU valve blocks. A pressure switch mounted on each valve block monitors the main control valve operation. After this, the POB solenoid valves are energized. The POBs are released and the motors run.

Torque shafts and gearboxes transmit the power from the PCU to the drive stations. Down drive gearboxes, downdrive shafts, input gearboxes and cross shafts at the drive stations transmit the power to rotary actuators. The torque limiters in the input gearboxes prevent the transmission of too much torque to the rotary actuators and the aircraft structure. The rotary actuators move the carriages on which the flaps are installed. When the motor operates with a certain speed the High-speed solenoid valves are energized.

As the flaps get near to the selected position, the High-speed solenoid valves are de-energized. When the flaps get to the specified position, the POB and Extend solenoid valves are de-energized. The POBs are applied and the motors stop.

The IPPU installed on the PCU indicates the position and correct operation. It sends signals to the Flight Warning Computers. The FWCs transmit this information to the Electronic Instrument System (EIS). The EIS displays the position of the flaps on the EWD.

G7508471 - G3NT1T0 - FM27D700000002

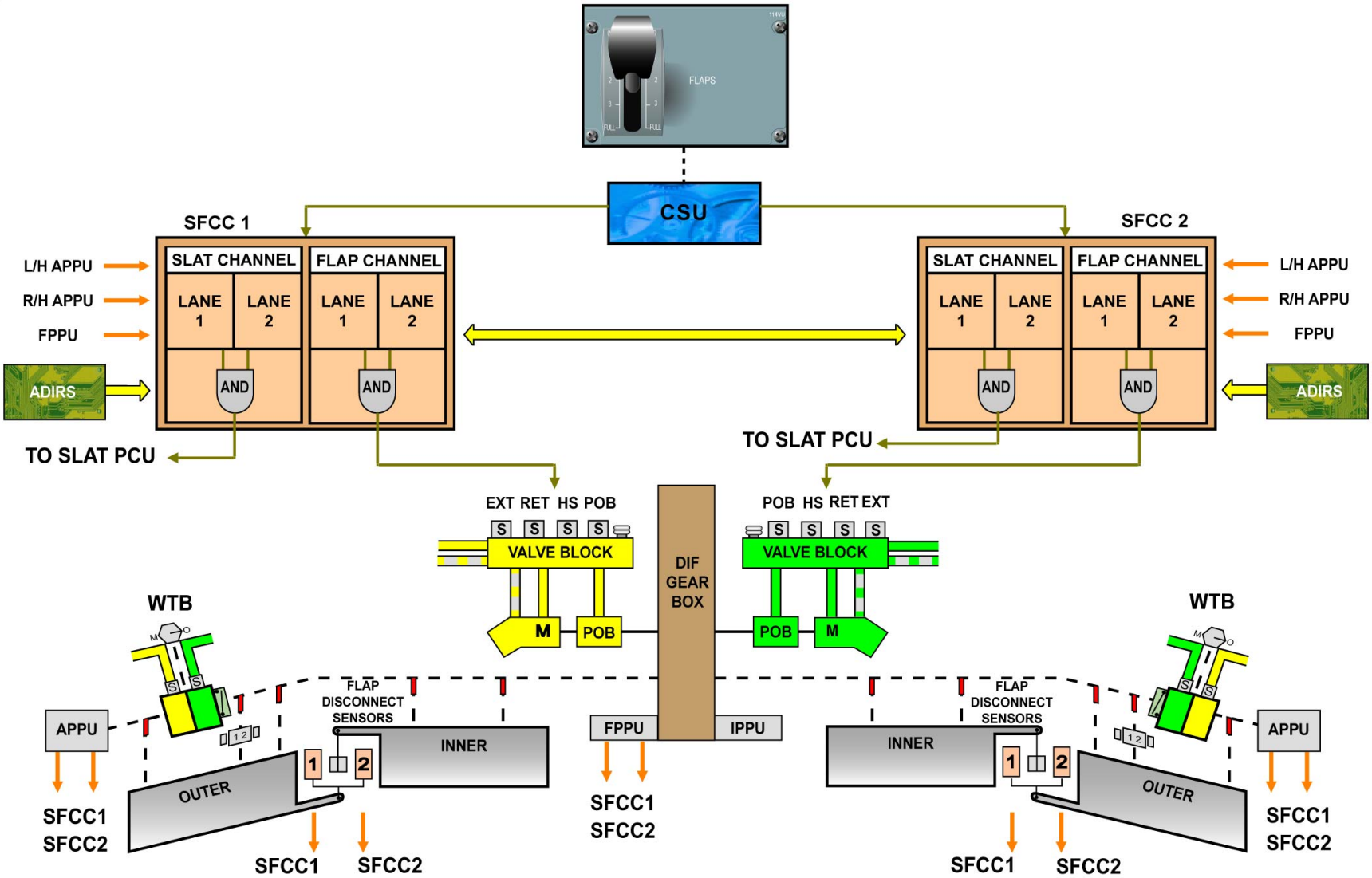

POWER CONTROL UNIT SHUT-DOWN SEQUENCE

SECONDARY CTL SLAT & FLAP NORM OPERATION D/O (3)

VALVE BLOCK OPERATION

When the SFCCs receive a command to extend the flaps:
They energize the extend solenoid valve of each PCU valve blocks
The energized extend solenoid valve let hydraulic fluid flow to one end of the spool of the PCU control valves (referred to the spool control valve).
The control valve moves from the neutral position and lets hydraulic fluid flow to:
-the POB solenoid valve,
-the pressure switch,
-the extend side of the motor.
A signal from each pressure switch to the SFCCs starts another signal which energize the POB solenoid valves:
- the POB releases,
- the motor moves the differential gearbox in the low-speed mode,
-the flaps extend.
When the motor operates with a certain speed, SFCCs energize each high-speed solenoid valves and the subsequent actions occur:
- the pressure maintaining valves are turned on,
- the control valves move further from the neutral position,
- the flow of hydraulic fluid to the motor increases,
-the motors operate at high speed.
As the flaps get near to the selected position:
- SFCCs de-energize each high-speed solenoid valve,
- the control valves move in the direction of the neutral position,
- the flow of hydraulic fluid to the motors decrease,
- the motors return to the low-speed mode,
- the flaps operate at a lower speed.
When the flaps get to the selected position:
- SFCCs de-energize each POB solenoid valve,
- the motors and the input shaft of the differential gearbox (and thus the flaps) are stopped.
- SFCCs de-energize each retract solenoid valves,
the spring moves each control valves to the neutral position.
For retraction, the operation is similar in principle

G7508471 - G3NT1T0 - FM27D700000002

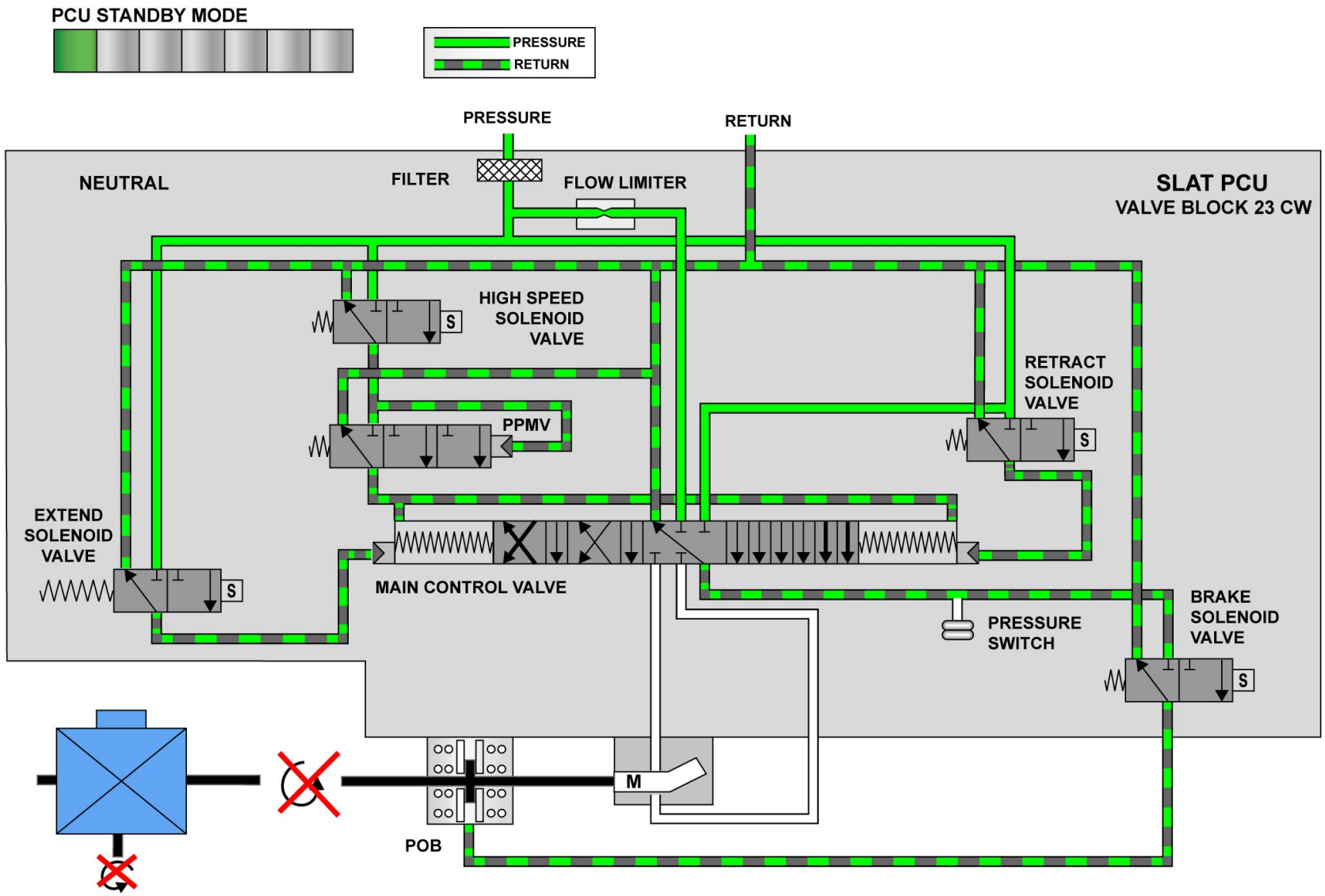

VALVE BLOCK OPERATION

G7508471 - G3NT1T0 - FM27D700000002

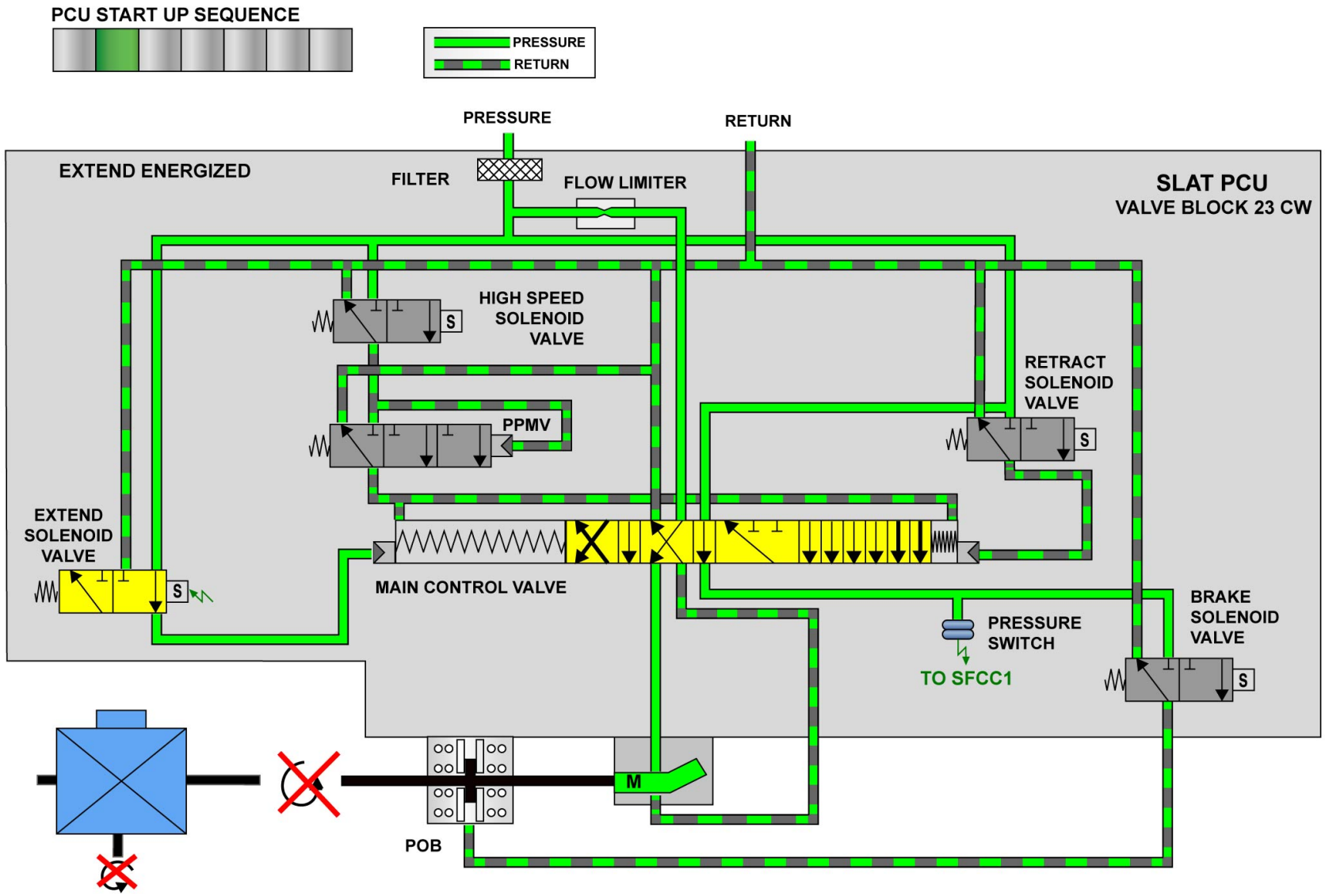

VALVE BLOCK OPERATION

G7508471 - G3NT1T0 - FM27D700000002

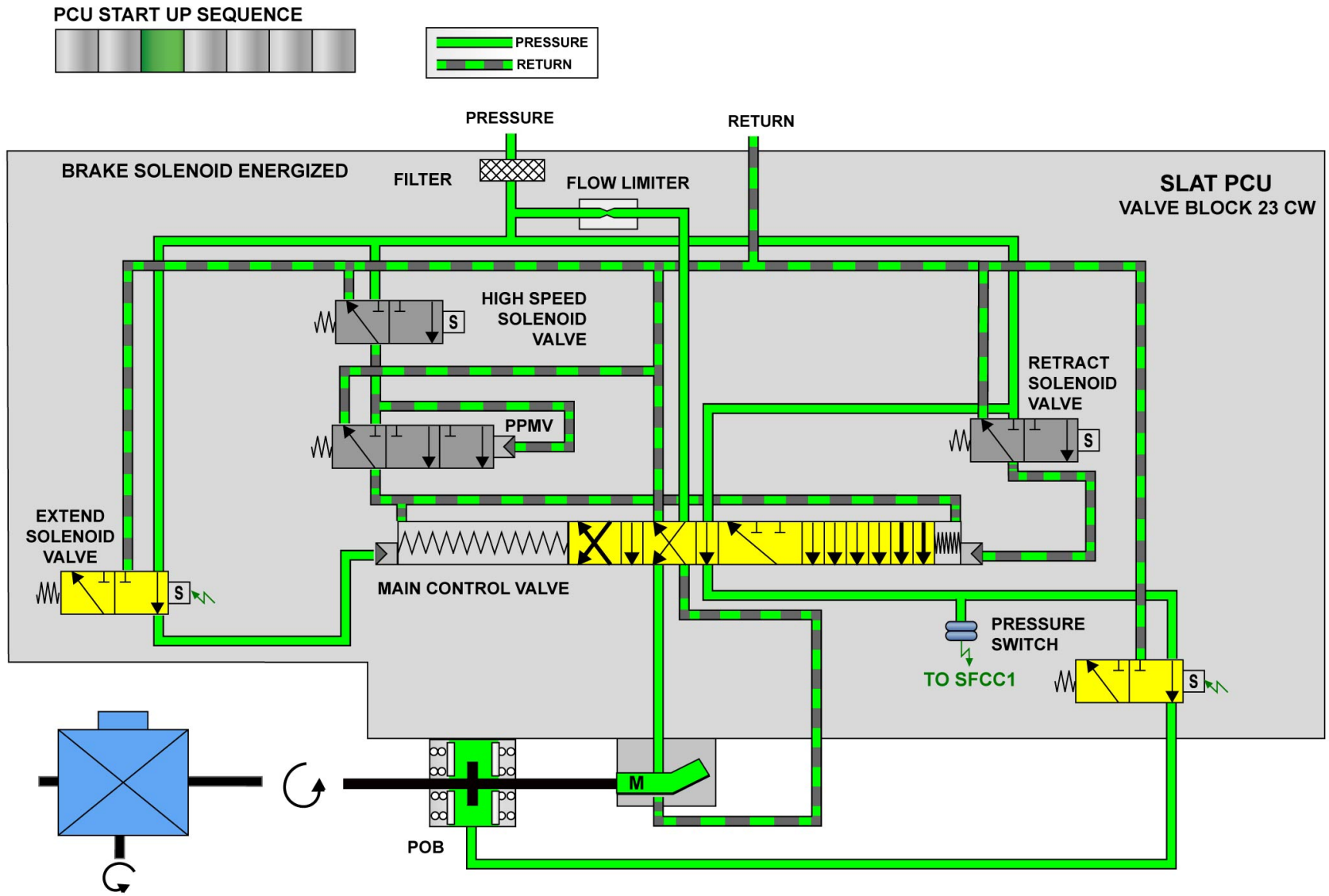

VALVE BLOCK OPERATION

G7508471 - G3NT1T0 - FM27D700000002

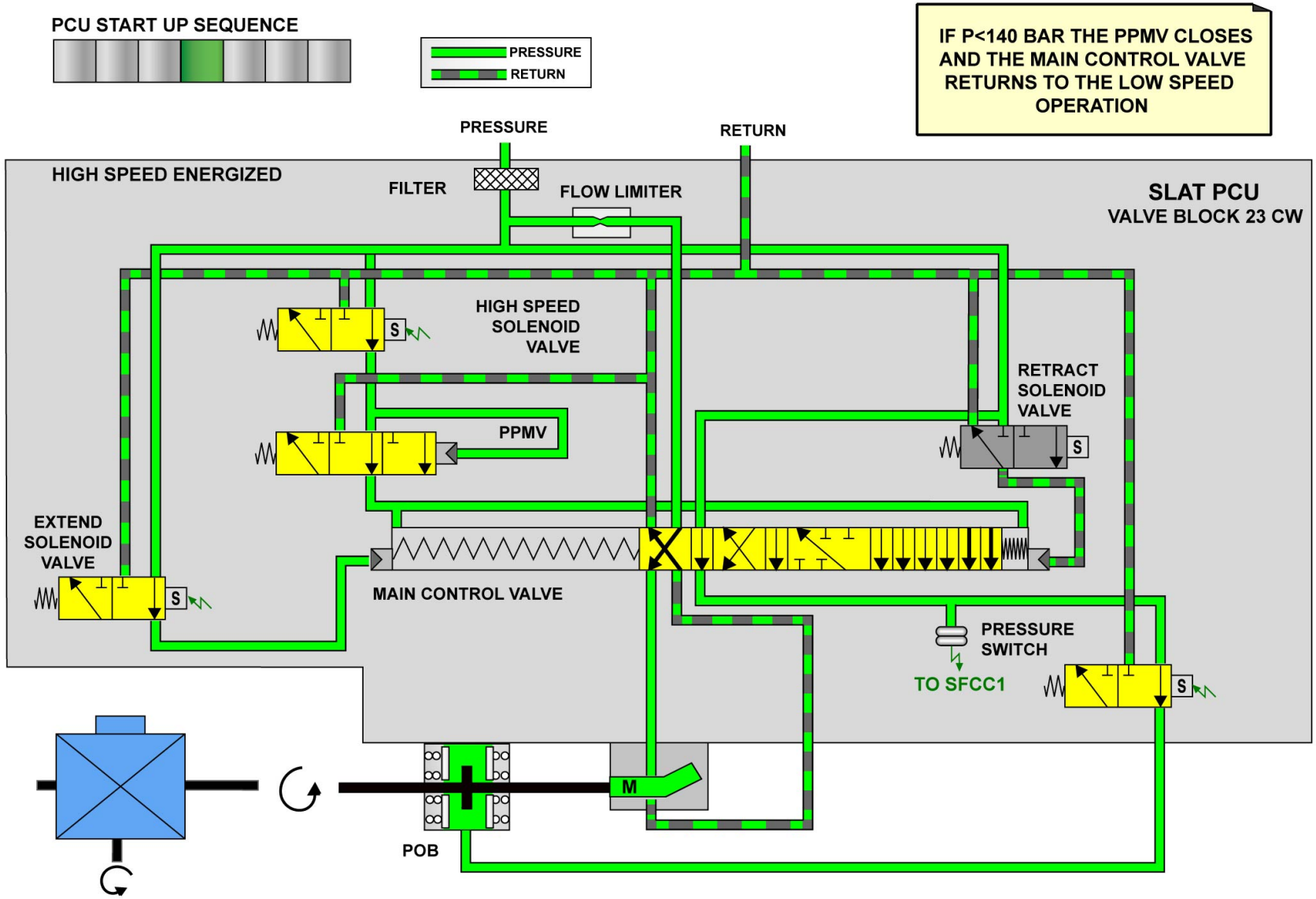

VALVE BLOCK OPERATION

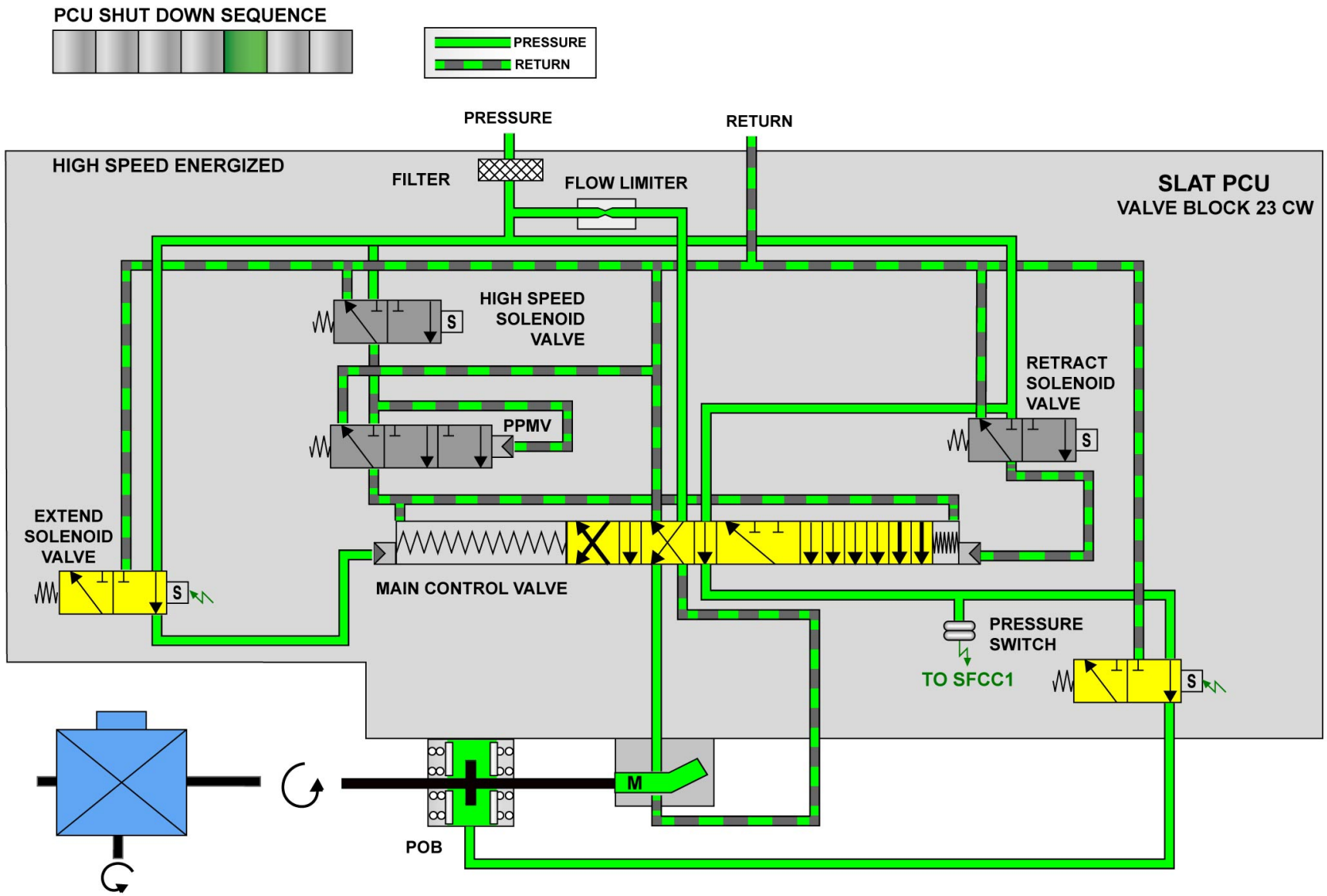

VALVE BLOCK OPERATION

G7508471 - G3NT1T0 - FM27D700000002

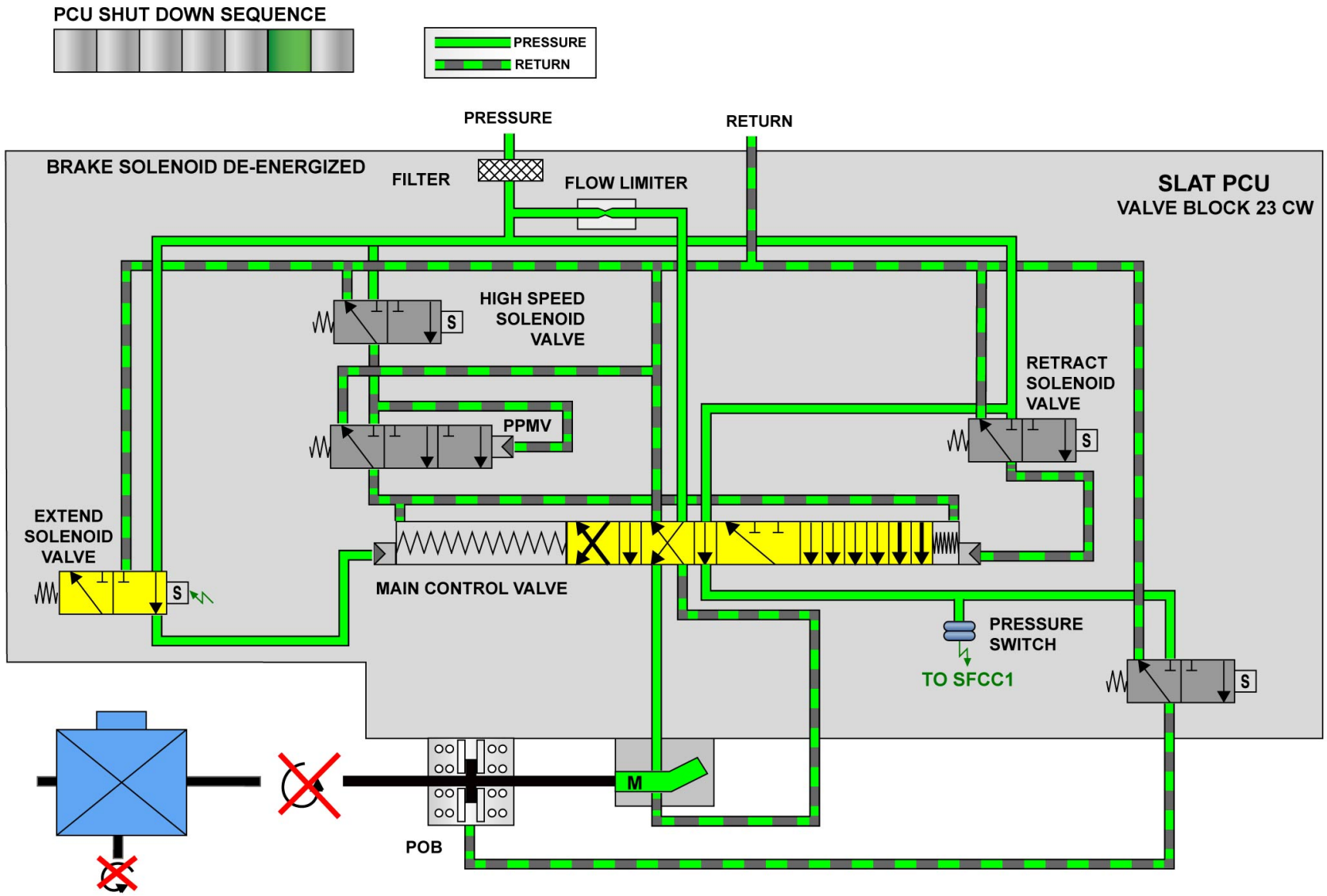

VALVE BLOCK OPERATION

G7508471 - G3NT1T0 - FM27D700000002

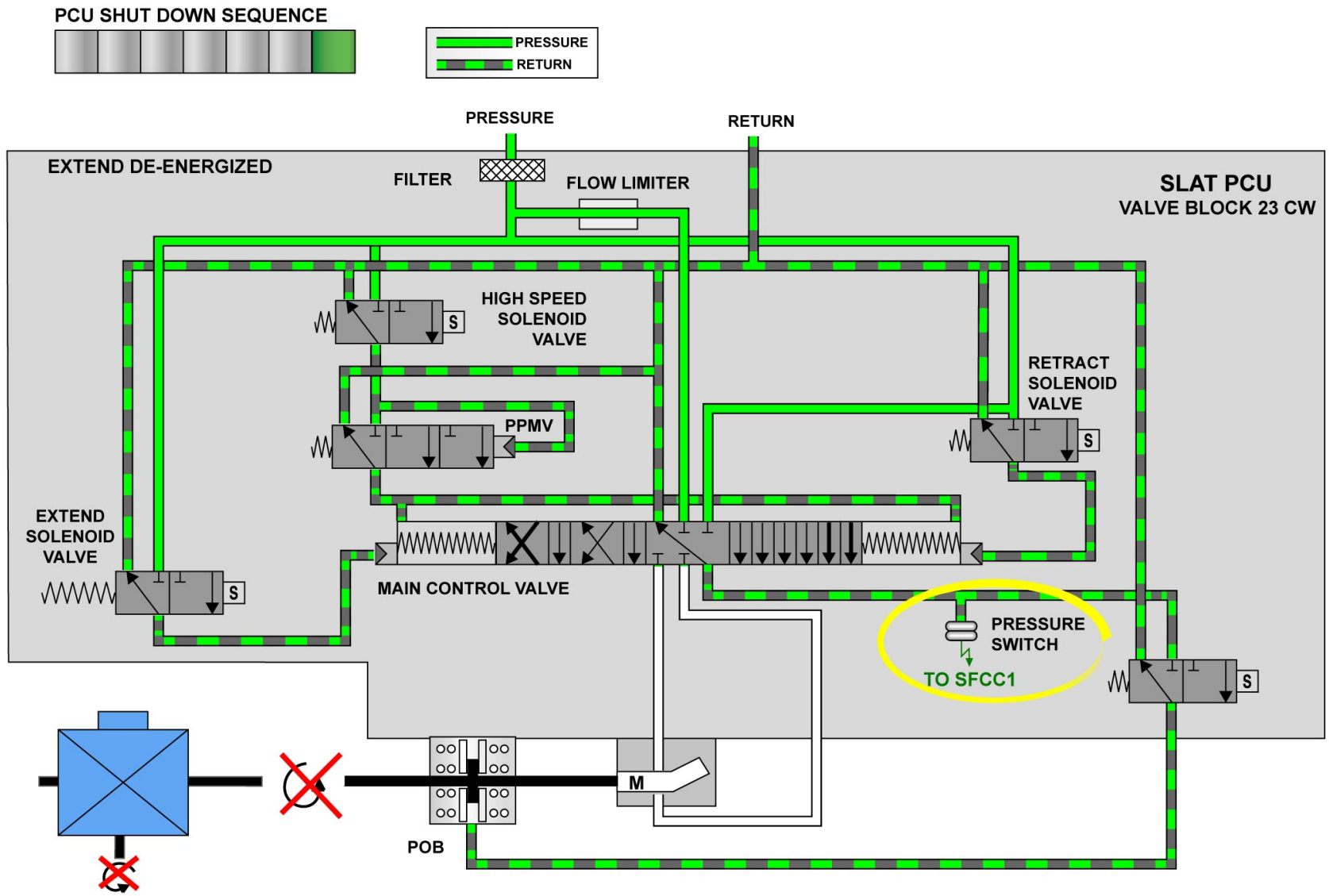

VALVE BLOCK OPERATION

G7508471 - G3NT1T0 - FM27D700000002

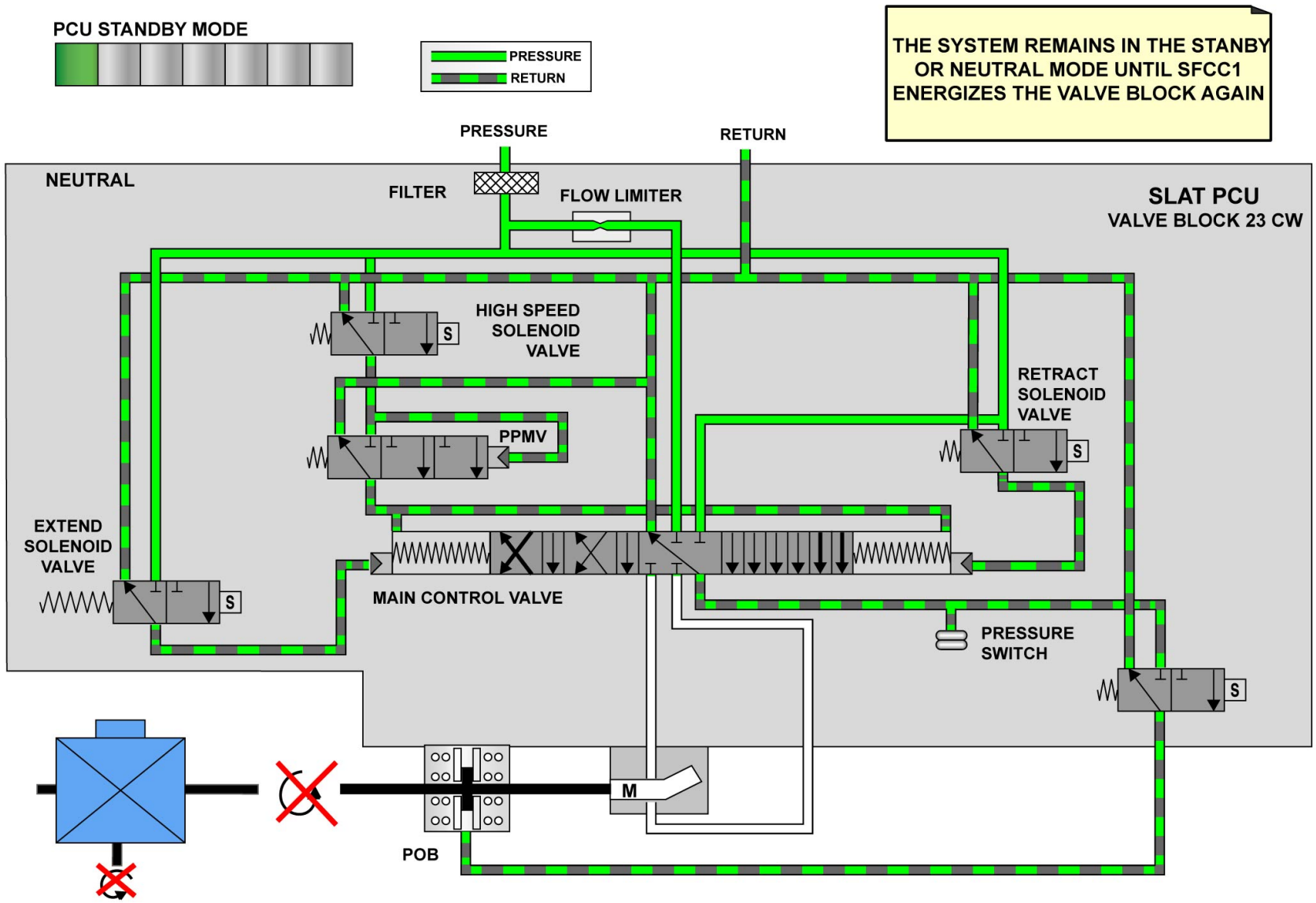

VALVE BLOCK OPERATION

G7508471 - G3NT1T0 - FM27D700000002

This Page Intentionally Left Blank

G7508471 - G3NT1T0 - FM27D7000000002

SECONDARY CTL SLAT & FLAP NORM OPERATION D/O (3)

WING TIP BRAKE (WTB) NORMAL OPERATION

During normal system operation WTB are released. In this configuration both solenoids are energized, one by SFCC 1 the other one by SFFC 2. Both corresponding hydraulic circuits are pressurized. The pressure force applied to the dual pistons compresses the spring pack through the pressure plate. The friction plates and the through shaft are free in rotation.

G7508471 - G3NT1T0 - FM27D700000002

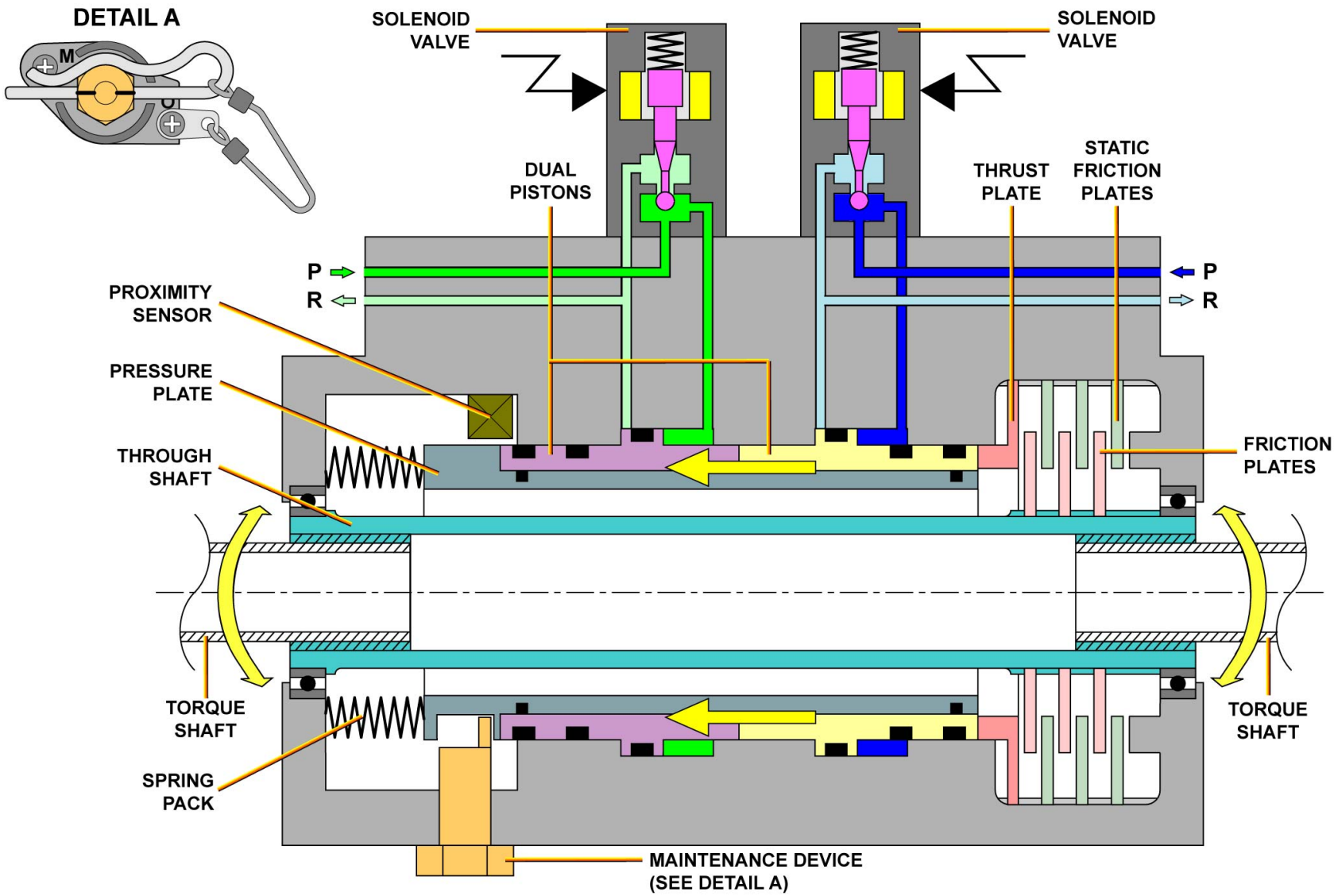

WING TIP BRAKE (WTB) NORMAL OPERATION

G7508471 - G3NT1T0 - FM27D700000002

SECONDARY CTL SLAT & FLAP NORM OPERATION D/O (3)

AUTOMATIC WING TIP BRAKE (WTB) ENGAGEMENT TEST

Engagement test of the WTBs is performed automatically by the SFCCs on a daily basis during flight phase 9 (after landing).
Slat WTBs are tested by the slat channel of SFCC 1 only. Flap WTBs are tested by the flap channel of SFCC 2 only.
During automatic engagement test of a given WTB, solenoids are de-energized by the SFCCs , then actual engagement of the WTB is checked by the SFCC from the proximity sensor feed-back signal.
For a given WTB, engagement test is successful if the SFCC get a "target far" signal from the proximity sensor.
If the test is successful the day counter of the SFCC is set to zero.
If the test is not done (test conditions not met) or unsuccessful for 10 consecutive days, depending on the affected system, warning "FLAP TIP BRAKE FAULT" or "SLAT TIP BRAKE FAULT" is displayed on ECAM associated to the maintenance message "PERFORM WTB ENGAGEMENT TEST".
In this case the WTB engagement test has to be done manually by maintenance personnel through the MCDU.

G7508471 - G3NT1T0 - FM27D7000000002

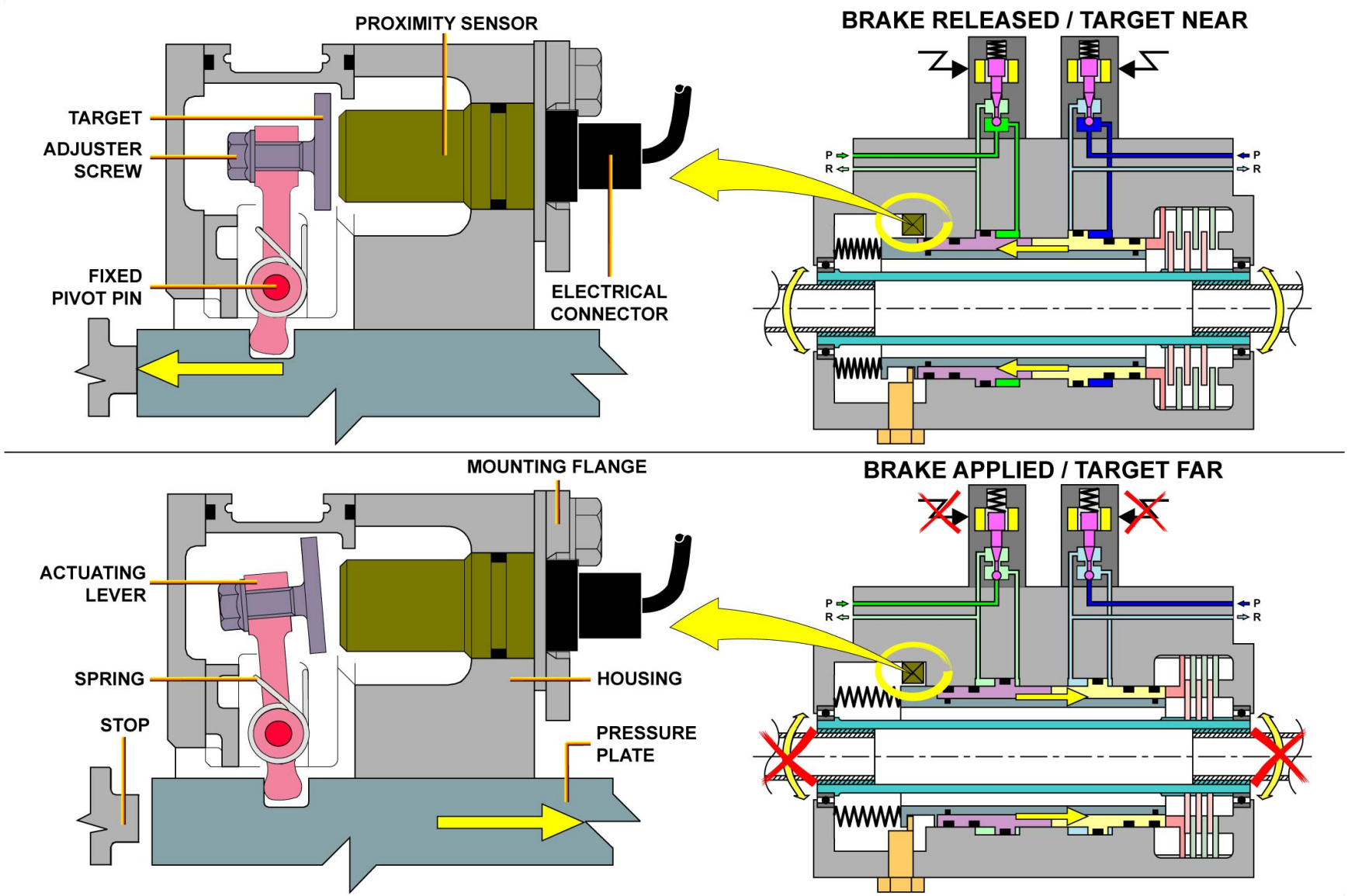

AUTOMATIC WING TIP BRAKE (WTB) ENGAGEMENT TEST

G7508471 - G3NT1T0 - FM27D700000002

SECONDARY CTL SLAT & FLAP ABNORM OPER D/O (3)

HALF SPEED OPERATION (ELECTRICAL FAILURE)

When an SFCC detects some failure(s) on its related channel, an abnormal valve block shutdown occurs:
- the electrical power is removed from the related PCU solenoid valves,
- the POBs are applied and stop their related hydraulic motors,

Operation is possible with the other valve block, but only with half speed.
A message is shown on the SD STATUS page.

G7508471 - G3NT1T0 - FM27D800000002

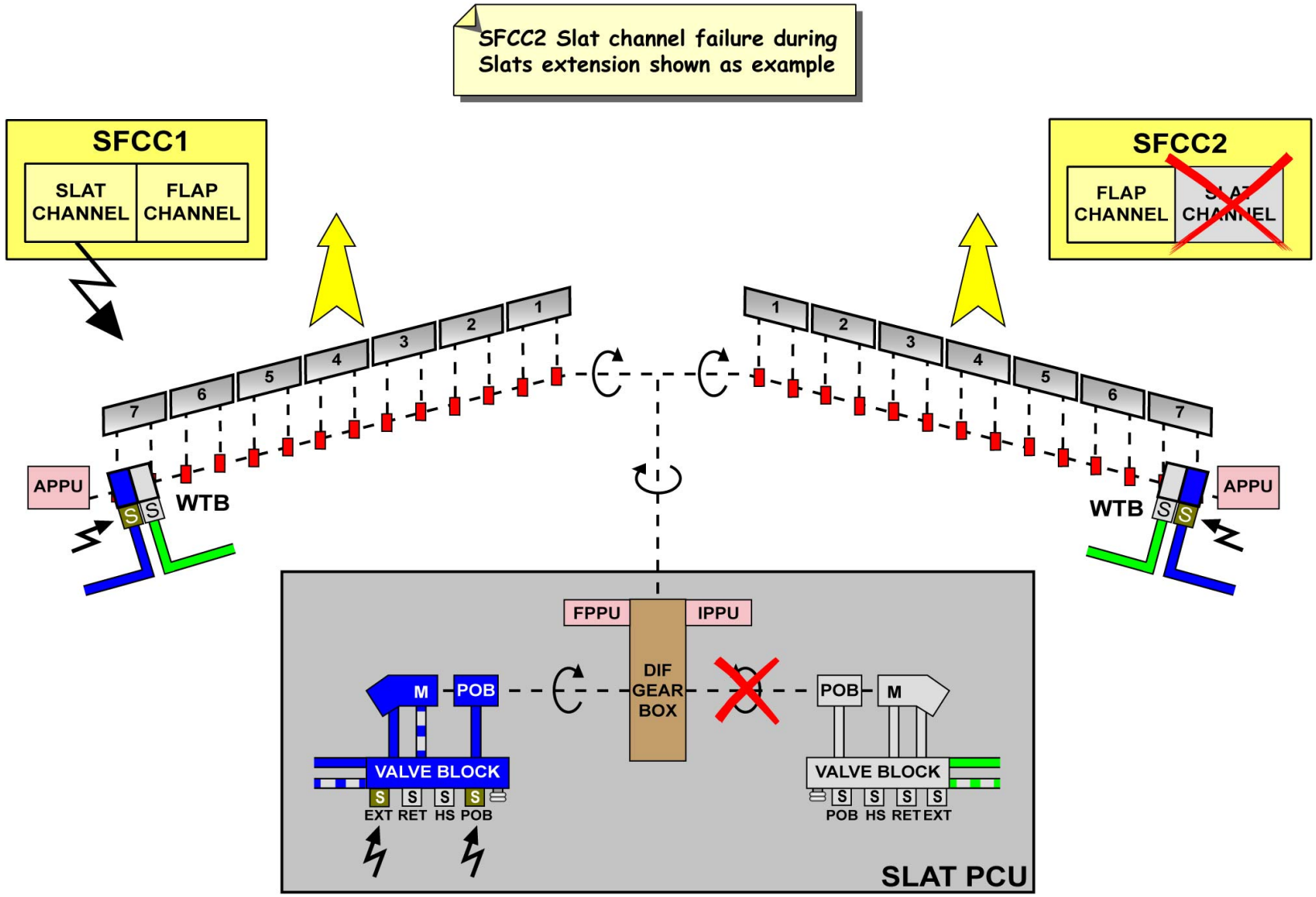

HALF SPEED OPERATION (ELECTRICAL FAILURE)

G7508471 - G3NT1T0 - FM27D800000002

SECONDARY CTL SLAT & FLAP ABNORM OPER D/O (3)

HALF SPEED OPERATION (HYDRAULIC FAILURE)

When one of the hydraulic supplies is missing, the following occurs:
- the electrical power is removed by the SFCC from their related PCU solenoid valves.
- POBs mounted on PCUs are applied and stop their related hydraulic motors.

Due to the presence of the differential gearbox, operation is possible with the other valve block, but only with half speed. A message is shown on the SD STATUS page.
If both hydraulic supplies are missing, the transmission system is stopped.

G7508471 - G3NT1T0 - FM27D800000002

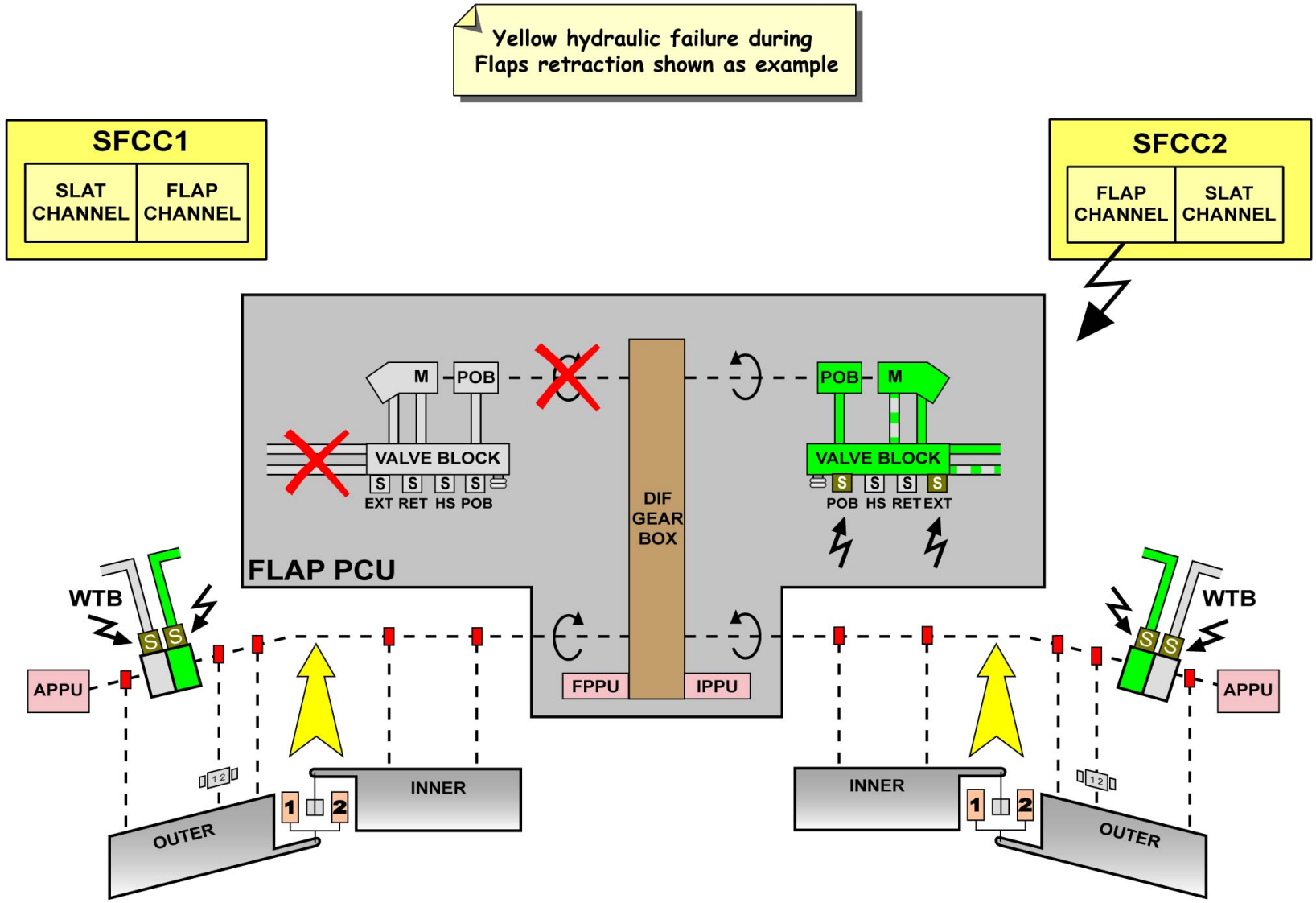

HALF SPEED OPERATION (HYDRAULIC FAILURE)

G7508471 - G3NT1T0 - FM27D800000002

SECONDARY CTL SLAT & FLAP ABNORM OPER D/O (3)

SYSTEM JAM

If the combined operational speed of the two hydraulic motors falls below the jam threshold, the SFCCs detect a jam and perform a shutdown of the PCU valve block and stop more start-ups of the PCU valve block.
The SFCCs transmit a warning signal " RECYCLE " to the EIS.
Then if a reverse lever selection is made, the SFCCs receive a new correct CSU command. It cancels the PCU start-up inhibition thus move the surfaces to the opposite direction (reset). Depending on the severity of the jam, reverse selection (reset) is possible or not.
A system jam can be caused by foreign object damage (FOD), ice formation on tracks or a lack of grease, oil, lubricant or semi-fluid in actuators/gearboxes.
If the transmission is mechanically jammed and cannot be reset from the cockpit, maintenance troubleshooting is necessary: First, look at the system torque limiters indicator to know on which side is located the problem. A red pop-out indicator protrudes on the jammed side. Then, move from each actuator torque limiter indicator to the other. If an indicator is popped out, the problem is located around its vicinity. Several locations may be affected.

G7508471 - G3NT1T0 - FM27D800000002

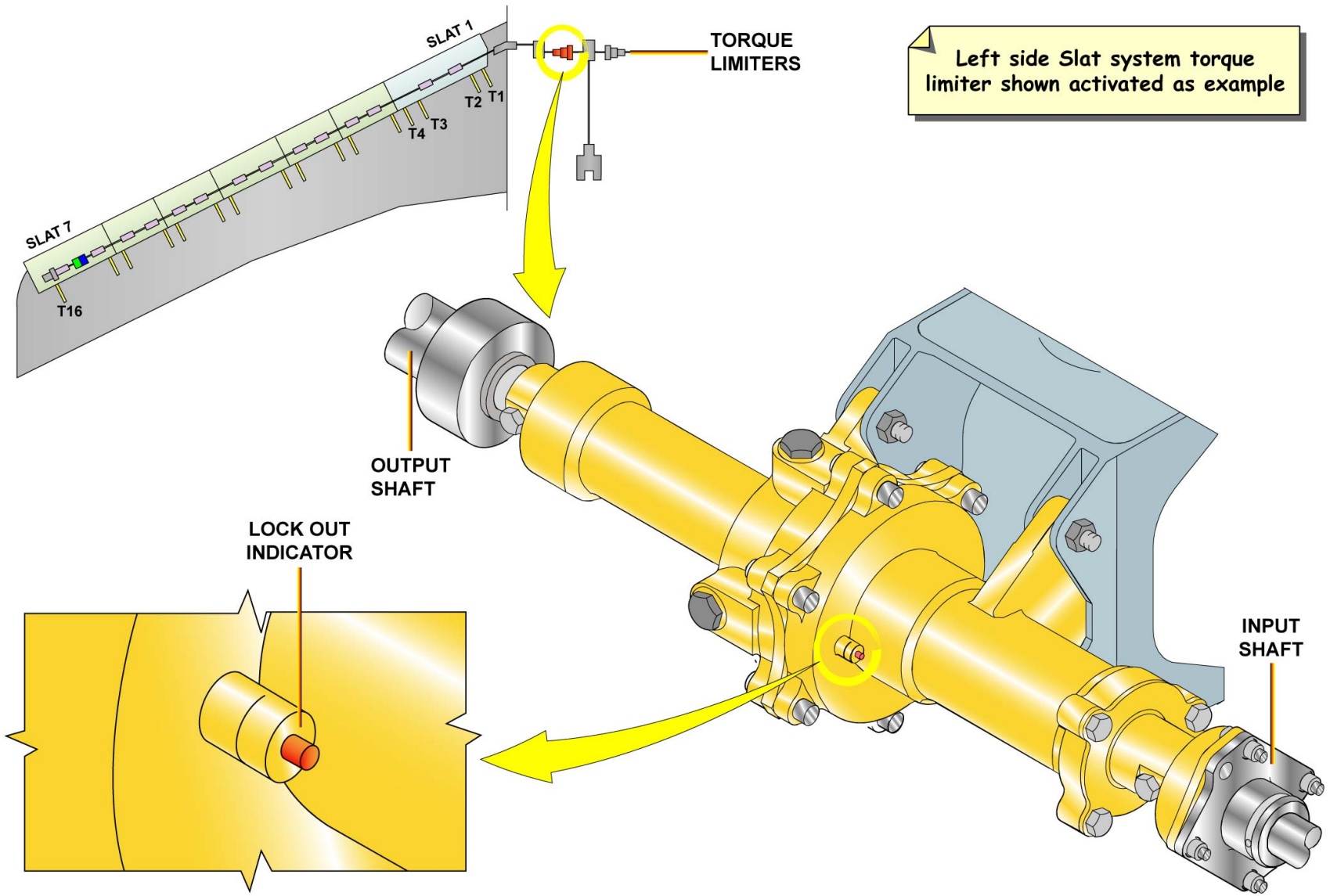

SYSTEM JAM

G7508471 - G3NT1T0 - FM27D800000002

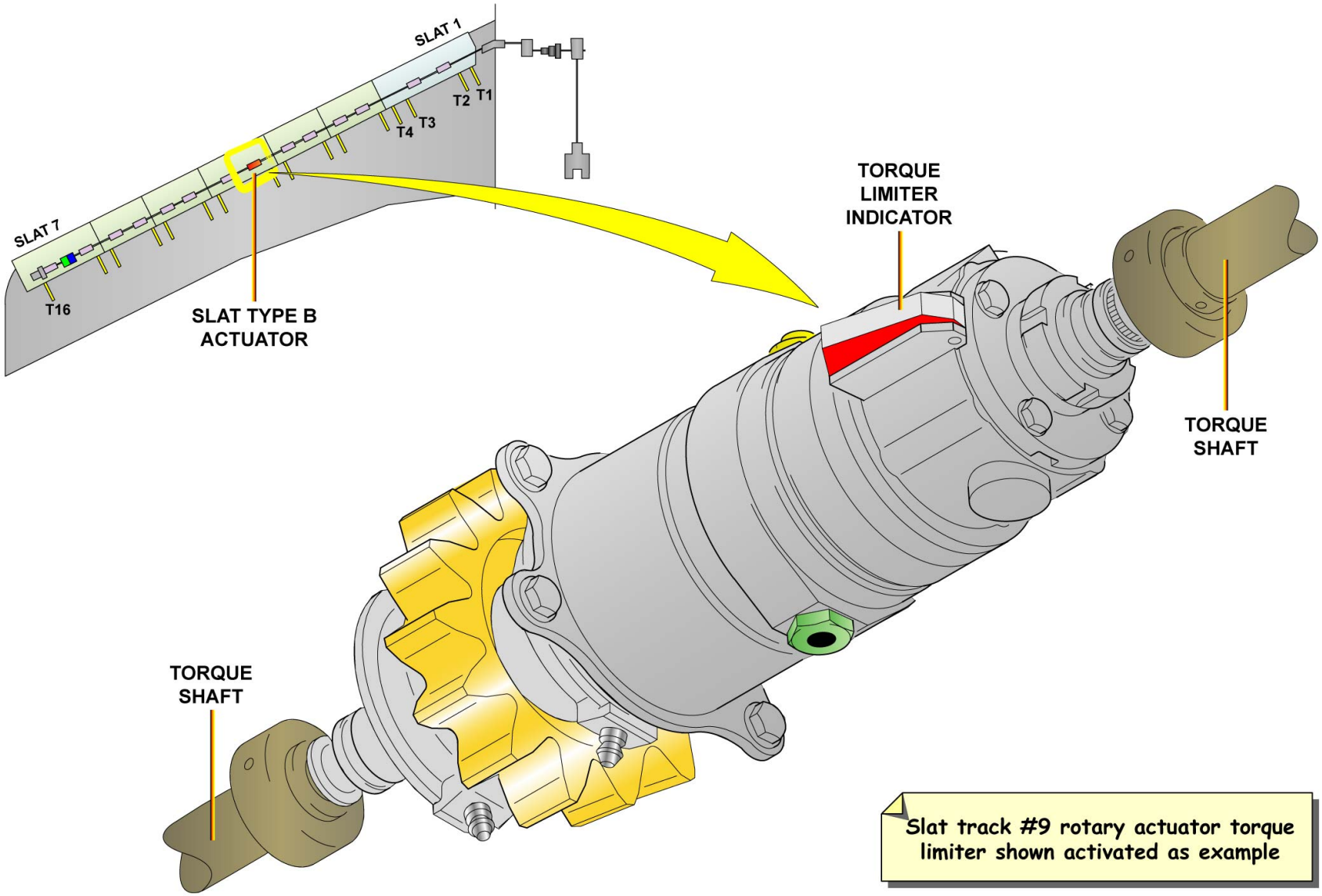

SYSTEM JAM

G7508471 - G3NT1T0 - FM27D800000002

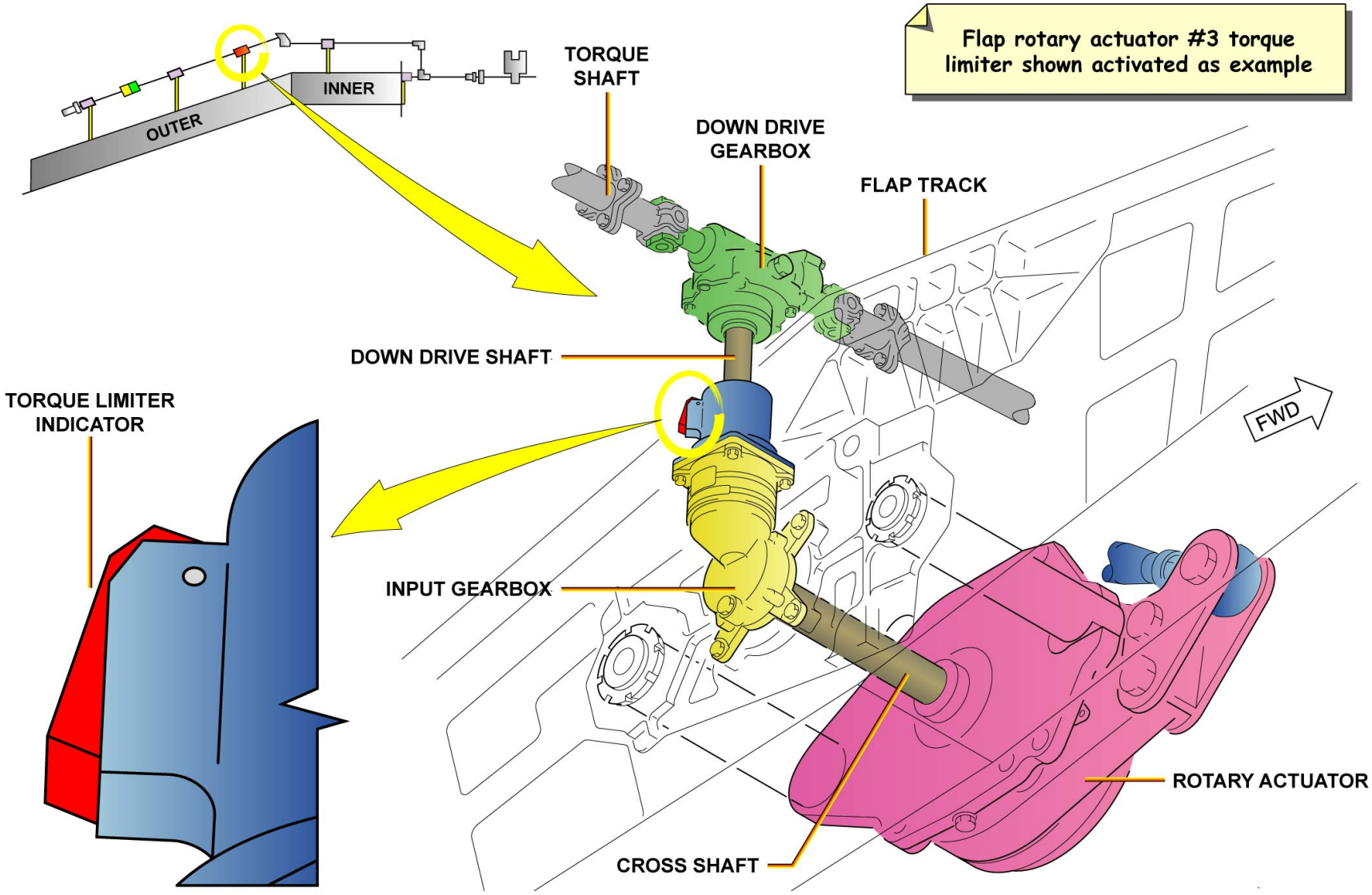

SYSTEM JAM

G7508471 - G3NT1T0 - FM27D800000002

SECONDARY CTL SLAT & FLAP ABNORM OPER D/O (3)

FLAP ATTACHMENT FAILURE (INTERCONNECTING STRUT)

The SFCCs monitor the disconnect switches in the flap interconnecting struts for a flap disconnect at the drive station 1, 2 or 3. If a SFCC detects a flap disconnect it performs an abnormal shutdown of the related PCU valve block, stops more start-ups of the related valve block (reset only on ground or SFCC power-up) and transmits a failure message to the second SFCC.
If the second SFCC confirms the failure it confirms the valve block start-up inhibition. The SFCCs transmit a warning signal to the EIS.

G7508471 - G3NT1T0 - FM27D800000002

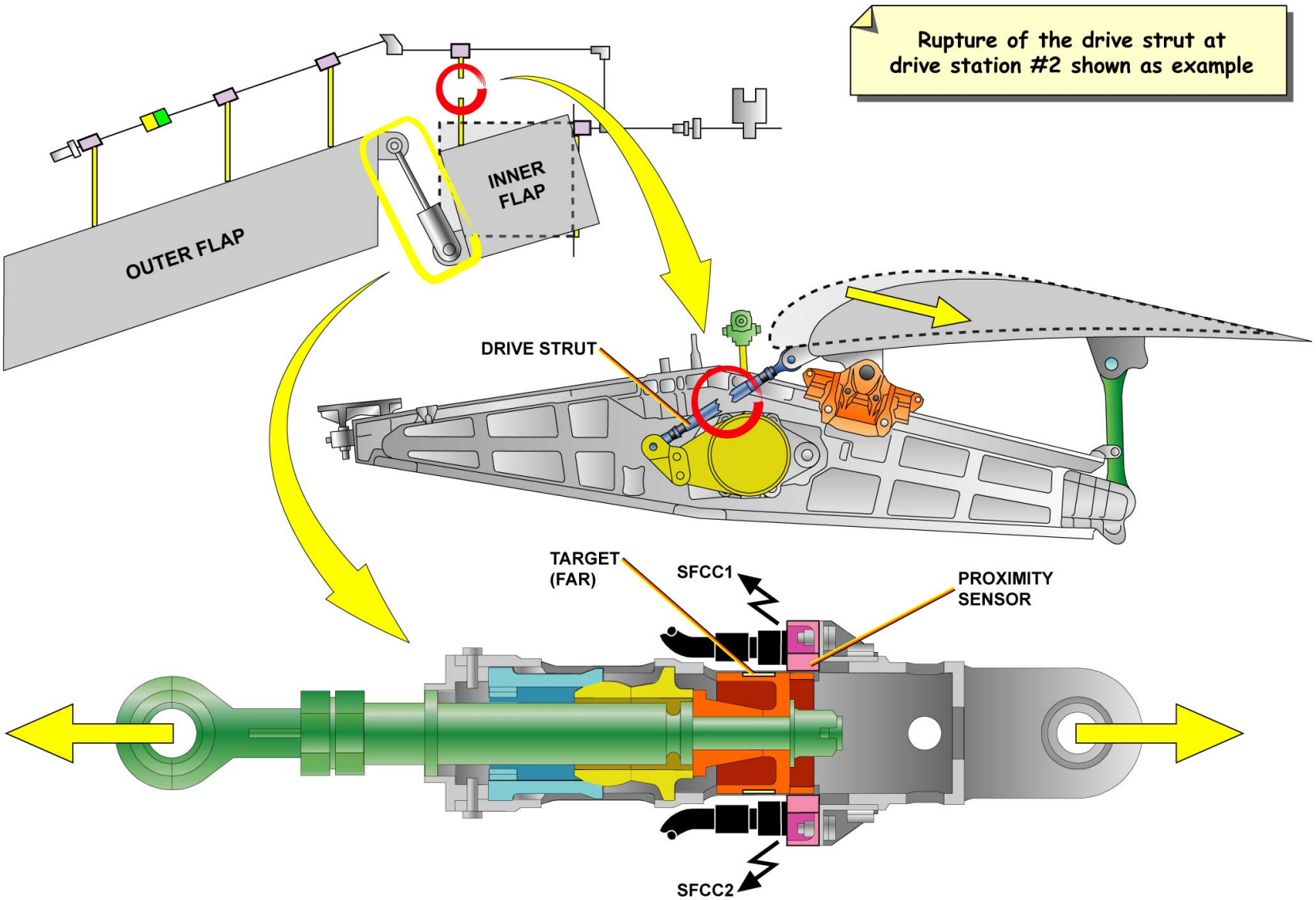

FLAP ATTACHMENT FAILURE (INTERCONNECTING STRUT)

G7508471 - G3NT1T0 - FM27D800000002

SECONDARY CTL SLAT & FLAP ABNORM OPER D/O (3)

FLAP ATTACHMENT FAILURE (TRACK 4 SENSOR STRUT)

The same occurs if a Flap Track 4 sensor detects a flap disconnect.

G7508471 - G3NT1T0 - FM27D800000002

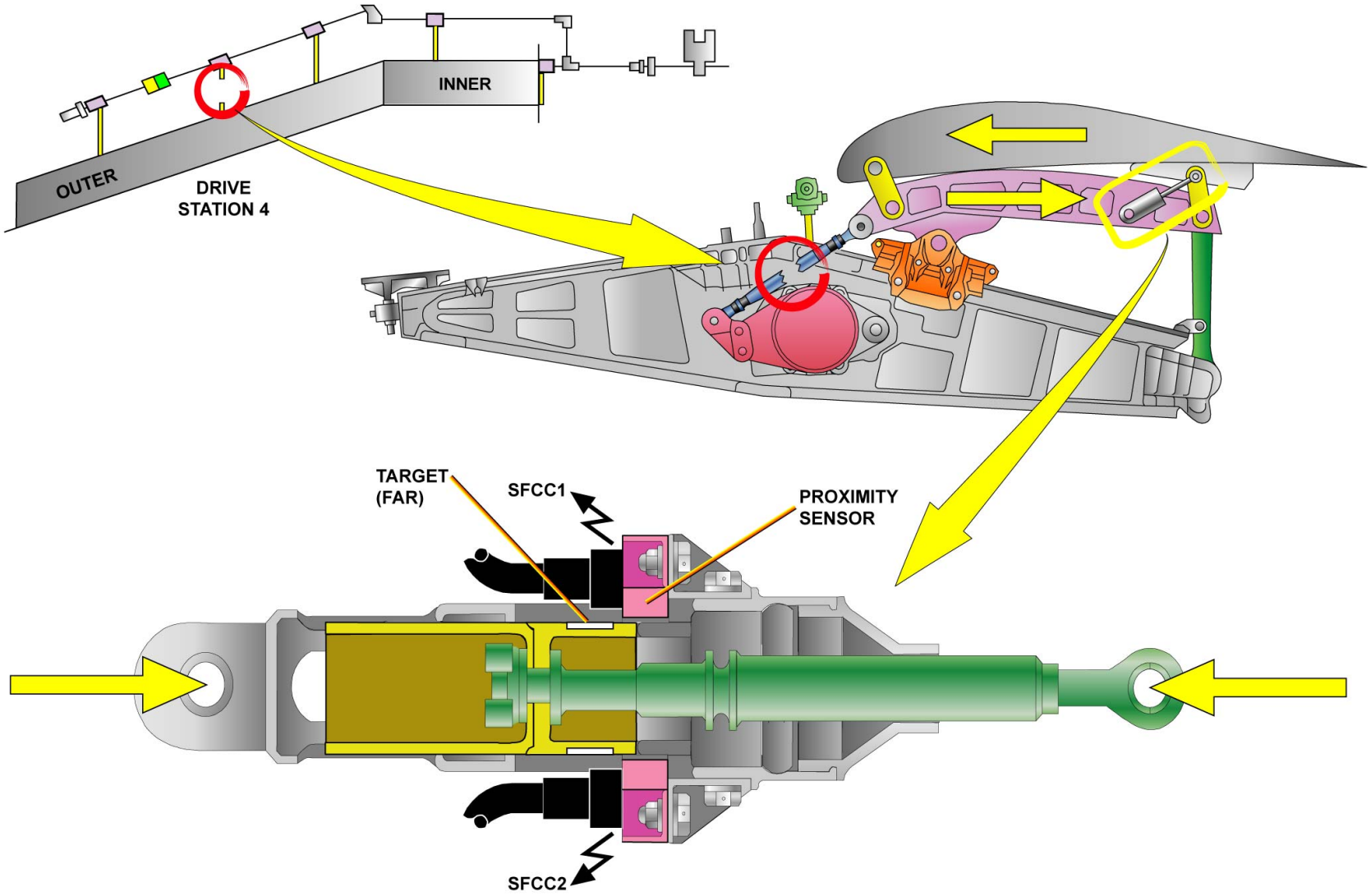

FLAP ATTACHMENT FAILURE (TRACK 4 SENSOR STRUT)

G7508471 - G3NT1T0 - FM27D800000002

SECONDARY CTL SLAT & FLAP ABNORM OPER D/O (3)

FAILURE

An electro hydraulic pressure-off brake (referred to as a WTB) is located near the end of the slat and flap transmission systems in each wing. The WTBs stop and hold the transmission if the SFCC detects some given types of failures such as asymmetry, runaway, over speed or uncommanded movement. Each WTB has two solenoid valves. The WTB solenoid valves receive power through their related SFCCs.
When WTBs are applied, no further movement of the affected system is possible; reset is only possible on the ground via the MCDU by the SFCC/WTB RESET menu page.

ASYMMETRY

An asymmetry is a position difference between the left and right APPUs of the transmission system (i.e: broken left torque tube) . A failure is given as valid if the recorded value is outside the limit.
If an SFCC detects an asymmetry it:
- de-energizes its related WTB circuits,
- performs an abnormal shutdown of the related PCU valve block,
- stops more start-ups of its related PCU valve block,
- transmit a warning signal to the EIS.
- transmits a failure message to the other SFCC flap channel.

If the flap channel of the other SFCC confirms the failure it:
- software latches the WTBs,
- confirms the valve-block start-up inhibition,

If the second SFCC does not confirm the failure the system gives a PPU failure message and holds the failure message in the nonvolatile memory.
If an unconfirmed asymmetry disappears from the first flap channel, and the flight crew select a new CSU position, the SFCC:
- energizes the WTB solenoids,
- cancels the PCU valve-block start-up inhibition,
- cancels the warning signal to the EIS,
- cancels the second SFCC flap-channel failure message.

RUNAWAY

A runaway is given as a positional difference between both APPUs and the FPPU (i.e: broken output shaft) The SFCCs monitor the system for runaway. If a SFCC detects a runaway it does the same actions as an asymmetry.

UNCOMMANDED MOVEMENT

If the system moves from its last commanded position or in the wrong direction, the SFCCs calculates the direction in which the system moves with data from the Air Data/Inertial Reference Unit (ADIRU) and the CSU.
If a SFCC finds an uncommanded movement it does the same actions as an asymmetry.

OVERSPEED

An overspeed is given when the speed of the flap torque shafts, measured at the APPU, is too high (ie: high speed solenoid failure). If a SFCC detects a valid overspeed it does the same actions as an asymmetry.

WTB MANUAL RELEASE

The SFCCs monitor the WTB proximity switches and the hydraulic system pressure. It finds a WTB manual release condition when the maintenance device of the WTB is in the "M" position, the hydraulic system pressure switch finds a low system pressure and the WTB proximity switch indicates target FAR.
If the SFCCs find a manual release, it:
- de-energizes and hardware latches the WTBs,
- performs an abnormal shutdown of the related PCU valve block,
- stops more start-ups of the related PCU valve block,
- transmits a warning signal to the EIS (SLAT/FLAP TIP BRK FAULT), transmits a failure message to the second SFCC,

G7508471 - G3NT1T0 - FM27D800000002

- keeps the failure data in the nonvolatile memory.

G7508471 - G3NT1T0 - FM27D800000002

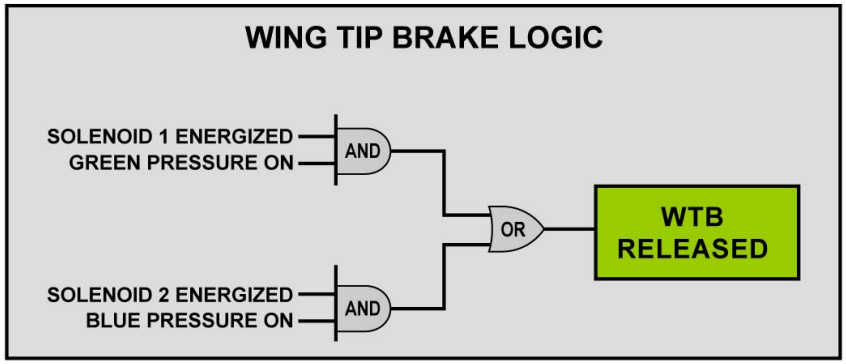

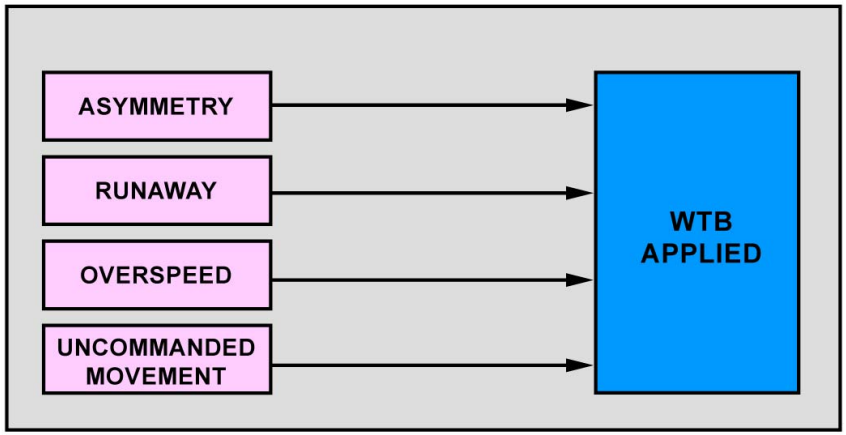

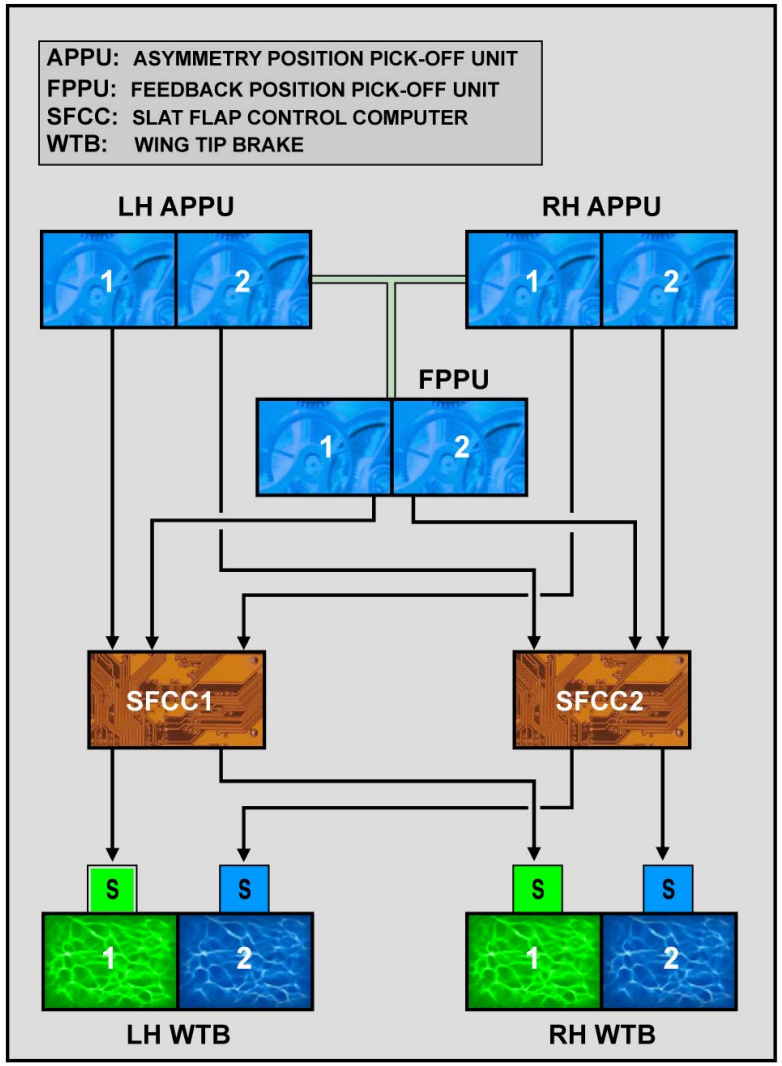

FAILURE - ASYMMETRY ... WTB MANUAL RELEASE

This Page Intentionally Left Blank

G7508471 - G3NT1T0 - FM27D800000002

SECONDARY CTL SLAT & FLAP ABNORM OPER D/O (3)

WING TIP BRAKE (WTB) OPERATION

SOLENOIDS DE-ENERGIZED

In case of an asymmetry, runaway, over speed or uncommanded movement being detected by SFCC 1 and SFCC 2 on the slat or flap systems, both LH and RH Wing Tip Brakes of the affected system are applied: on each WTB the two solenoids are de-energized by the SFCCs.

G7508471 - G3NT1T0 - FM27D800000002

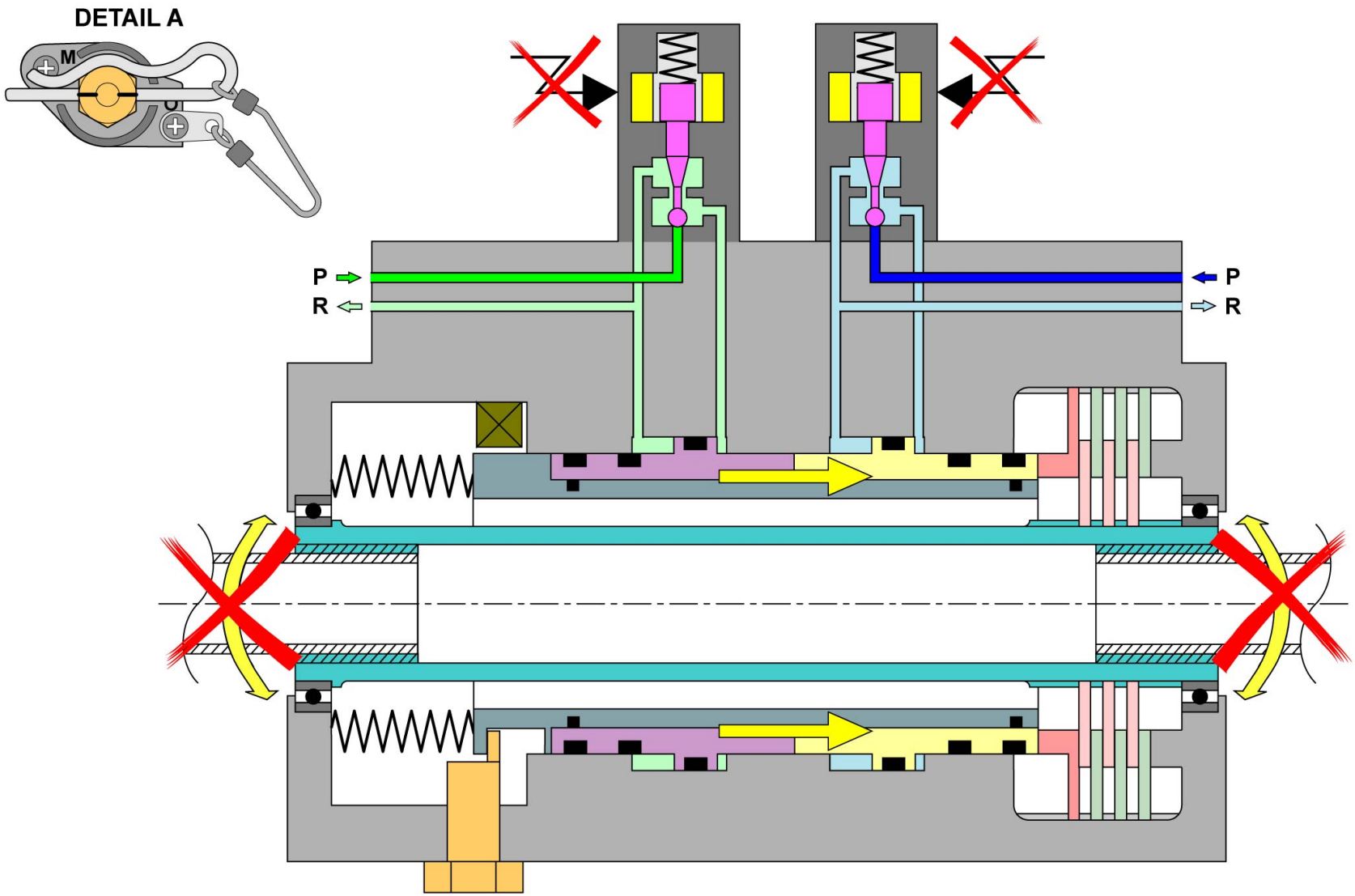

WING TIP BRAKE (WTB) OPERATION - SOLENOIDS DE-ENERGIZED

G7508471 - G3NT1T0 - FM27D800000002

SECONDARY CTL SLAT & FLAP ABNORM OPER D/O (3)

WING TIP BRAKE (WTB) OPERATION (continued)

ONLY ONE SOLENOID ENERGIZED

In case of an asymmetry, runaway, over speed or uncommanded movement being detected by only one SFCC, only the corresponding solenoid is de-energized; the other one remains energized by the SFCC having not detected the fault. In this configuration the WTB remains released.

G7508471 - G3NT1T0 - FM27D800000002

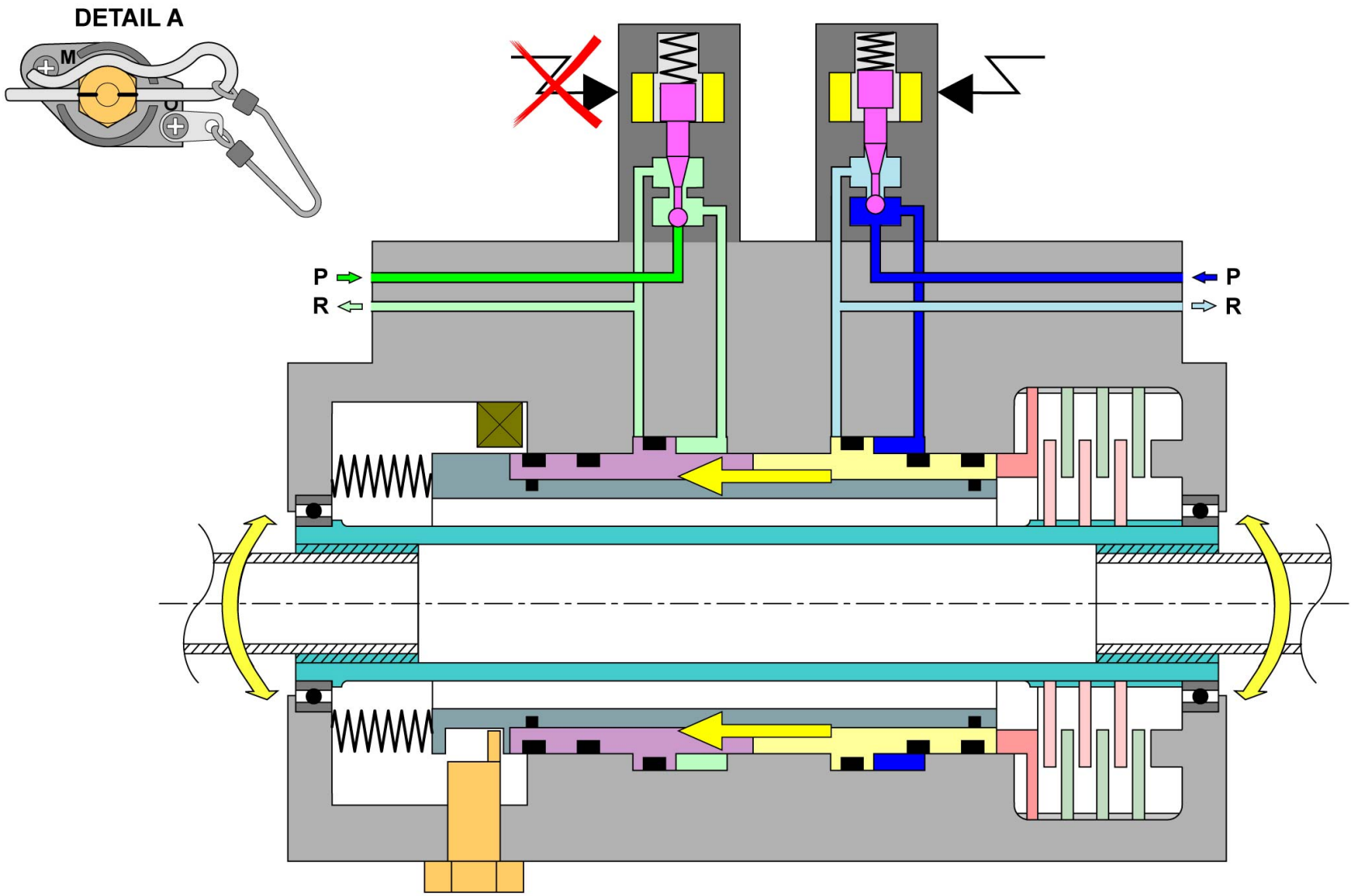

WING TIP BRAKE (WTB) OPERATION - ONLY ONE SOLENOID ENERGIZED

G7508471 - G3NT1T0 - FM27D800000002

SECONDARY CONTROL LAWS D/O (3)

SLAT FLAP CONTROL LEVER

The slat flap position indication is displayed on the ECAM EWD.
The slat flap control lever is installed in the cockpit on the center pedestal panel 114VU, and is connected to the Command Sensor Unit (CSU) which transforms the mechanical demand into electrical signals to the Slat Flap Control Computers (SFCCs).
The lever selects simultaneous operation of the slats and flaps and must be pulled out of the detent before selection of any position. The relationship between the lever position, flight phase and slat flap angles is shown in the following table.

G7508471 - G3NT1T0 - FM27D9F27CE0203

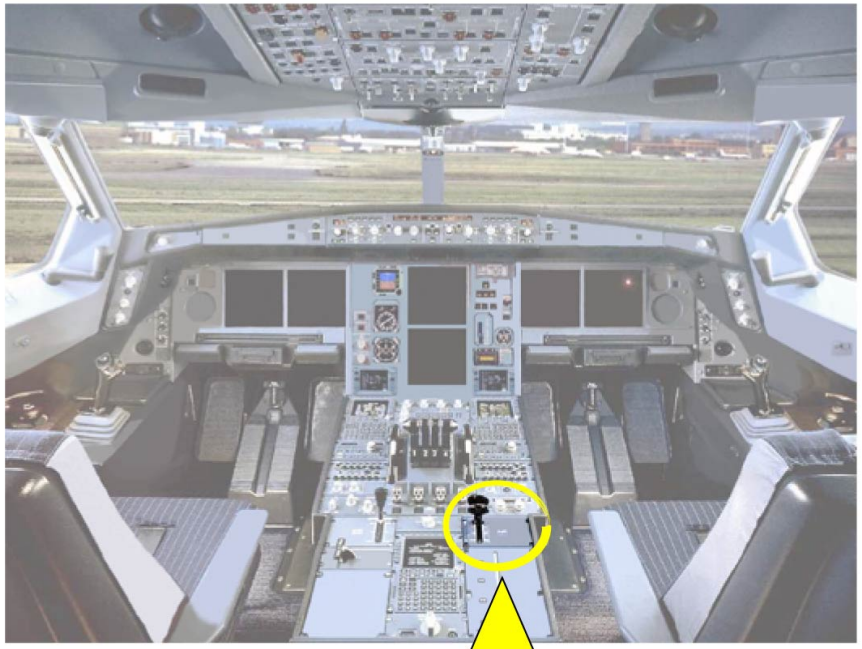

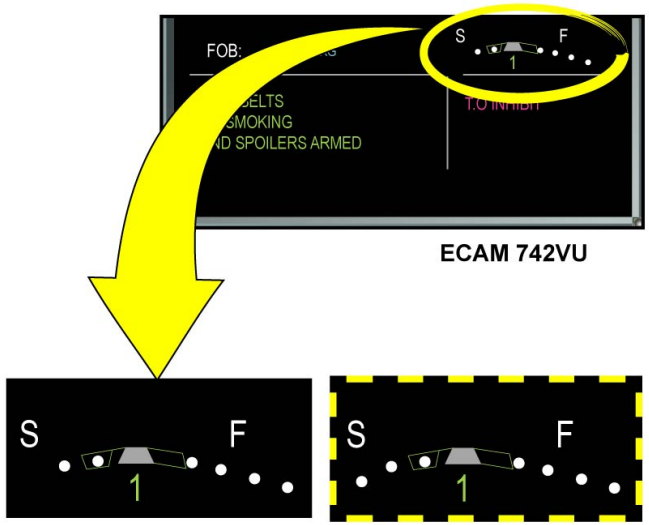

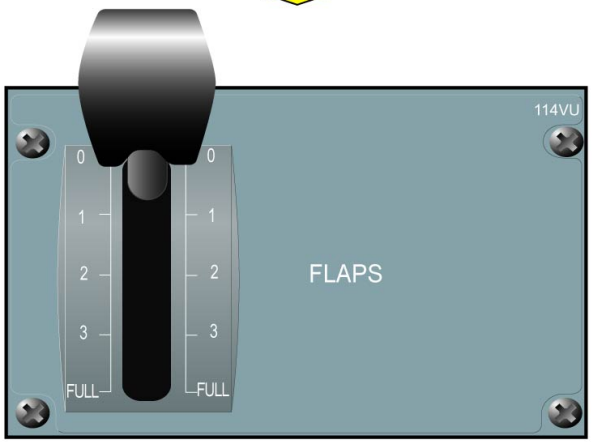

A330 ONLY

LEVER POSITION	FLIGHT PHASE	SLAT ANGLE		FLAP ANGLE	
		A330	A340	A330	A340
0	CRUISE	0°	0°	0°	0°
1	HOLD	17°	21°	0°	0°
1+F	TAKE-OFF	17°	21°	8.5°	17.5°
2	TAKE-OFF 1	21°	24°	14.5°	22.5°
3	TAKE-OFF 2 APPROACH	24°	24°	22.5°	26.5°
FULL	LAND	24°	24°	32°	32°

SLAT FLAP CONTROL LEVER

G7508471 - G3NT1T0 - FM27D9F27CE0203

SECONDARY CONTROL LAWS D/O (3)

EXTENSION ON GROUND

First slats and flaps are fully retracted and the clean configuration is displayed on the ECAM. On ground, when position 1 is selected, both slats and flaps extend. The take-off configuration is 1+F. Then 2 and 3 will be selected, and consecutively the FULL position.
In the FULL position slats and flaps are fully extended.

RETRACTION ON GROUND

The retraction sequence is the same as the extension sequence in inverse order.
With the A/C on ground and before both slats and flaps begin to retract, the configuration is 1+F.
Once the surfaces have reached the fully retracted position, the clean configuration is displayed on the ECAM.

EXTENSION IN FLIGHT

First slats and flaps are fully retracted and the clean configuration is displayed on the ECAM. In flight, when position 1 is selected, only slats extend. For positions 2, 3 and FULL, the deflection angles are the same as those for extension on ground.

RETRACTION IN FLIGHT

Retraction, from fully extended to position 3 and from position 3 to position 2, is identical to surface retraction on ground.
There are two flap configurations, depending on the Computed Air Speeds (CAS), for retraction to position 1 in flight:
- when the speed is below 200 Kts,
- when the speed is above 200 Kts.

G7508471 - G3NT1T0 - FM27D9F27CE0203

EXTENSION AND RETRACTION SEQUENCES

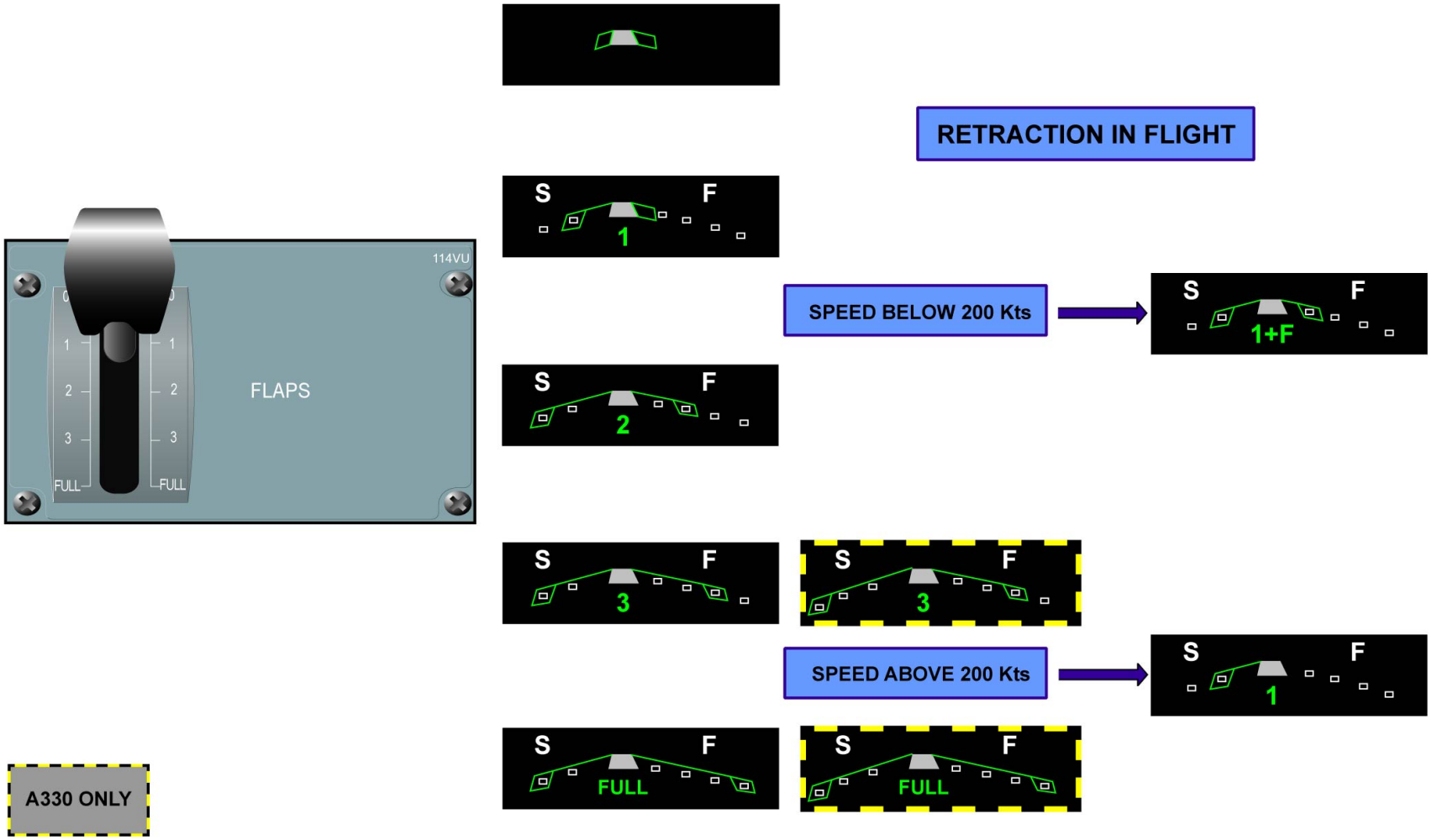

EXTENSION ON GROUND ... RETRACTION IN FLIGHT

SECONDARY CONTROL LAWS D/O (3)

AUTOMATIC RETRACTION IN FLIGHT

The current speed must be lower than 200 Kts, the configuration 1+F and the flap auto function are engaged.
When the CAS reaches 200 Kts, the flaps retract automatically to 0 and the new slat flap configuration is 1.

NOTE: Note that, when take-off is done in configuration 1+F, flaps fully retract automatically at 200 Kts if configuration 0 is not selected after take-off.

After an automatic flap retraction, there is no automatic re-extension if the speed drops below 200 Kts.

G7508471 - G3NT1T0 - FM27D9F27CE0203

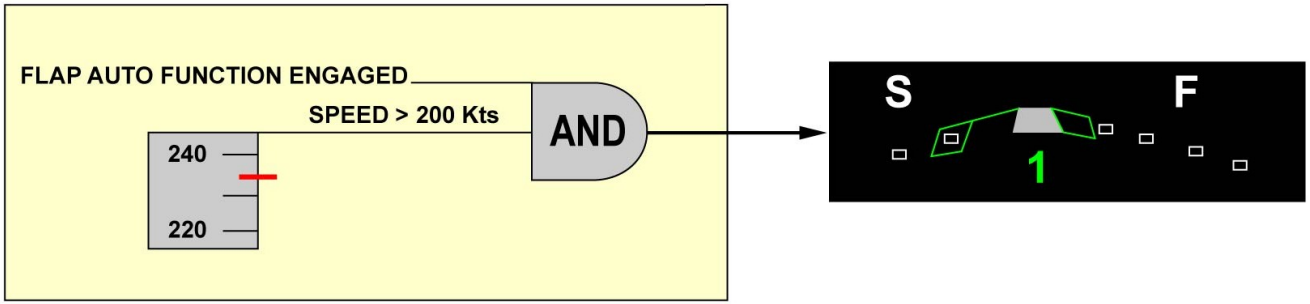

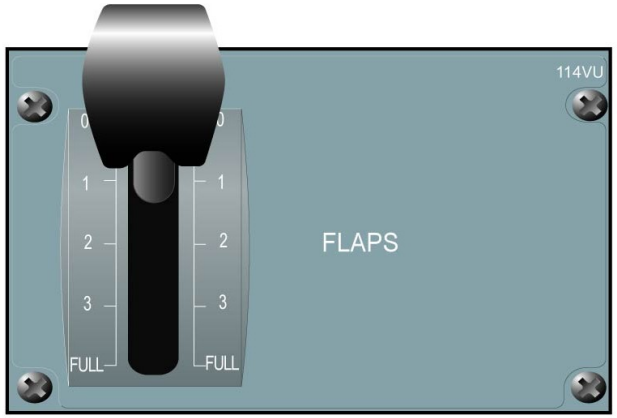

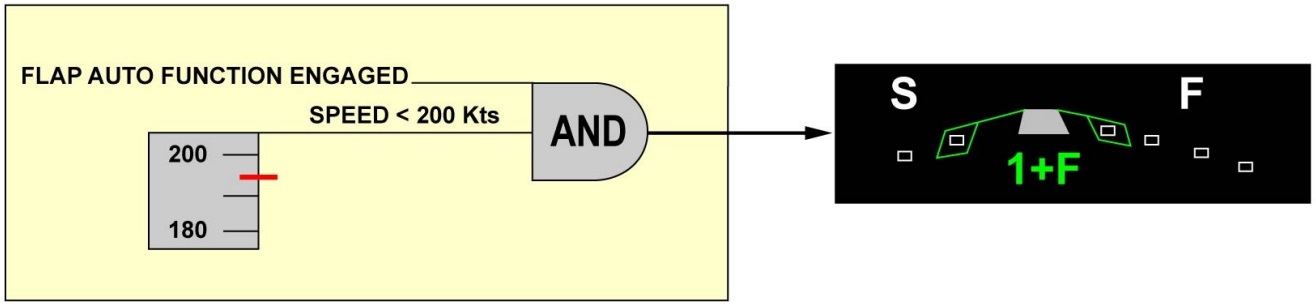

AUTOMATIC RETRACTION IN FLIGHT

G7508471 - G3NT1T0 - FM27D9F27CE0203

SECONDARY CONTROL LAWS D/O (3)

FLAP RELIEF

The flap relief and slat alpha lock functions will be shown in these last two topics.
The relief function limits flap surface extension to a relief angle as airspeed increases and exceeds Velocity Flap Extended (VFE).
When activated, the flap load relief system retracts the flaps to the deflection corresponding to the lever position just below the present one.
In that case, a green pulse F RELIEF message is displayed on the ECAM.
When the airspeed drops below VFE, the flaps automatically extend again to a larger angle.

SLAT ALPHA LOCK

The slat channels of the SFCCs receive Corrected Angle Of Attack (CAOA) and CAS provided by the Air Data Inertial Reference Units (ADIRUs) for the use of alpha lock computation.
When the angle of attack is high (alpha lock) or the speed is too low (slat baulk) slat retraction from position 1 to 0 is inhibited to prevent the A/C from stalling. A green pulse A LOCK message is displayed to indicate the retraction inhibition.
Slat retraction from position 1 to 0 is prevented if CAOA > 8.5º or CAS < 148 kts. The alpha lock function is reset if CAOA < 7.6 º or CAS > 154 Kts.
The function is not active if:
- the A/C is on ground with CAS < 60 Kts,
- alpha exceeds 8.5º or CAS drops below 148 Kts while retraction from position 1 to 0 has already started.

G7508471 - G3NT1T0 - FM27D9F27CE0203

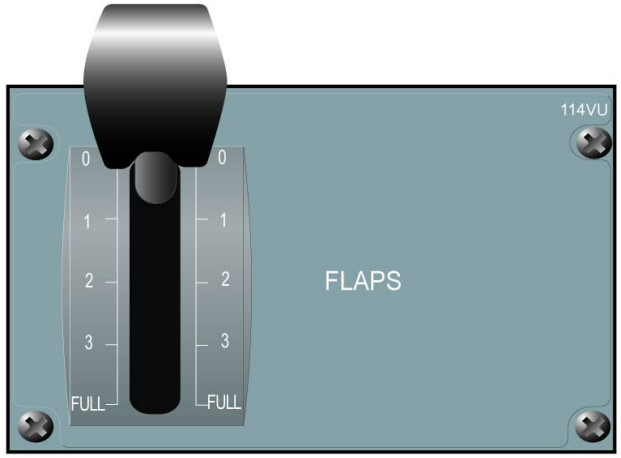

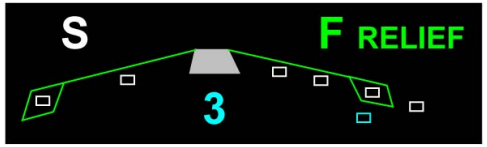

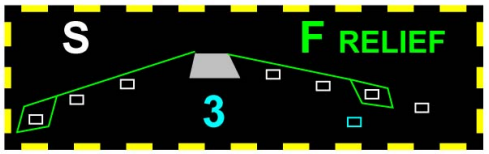

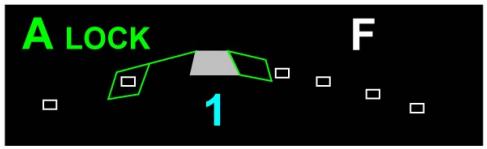

A330 ONLY

FLAP RELIEF & SLAT ALPHA LOCK

FLIGHT CONTROLS MCDU PAGES (2)

GENERAL

The flight controls architecture is built around the following computers:
- 3 Flight Control Primary Computers (FCPCs),
- 2 Flight Control Secondary Computers (FCSCs),
- 2 Flight Control Data Concentrators (FCDCs),
- 2 Slat/Flap Control Computers (SFCCs).
- 1 Back up Control Module (BCM).

The FCPCs, FCSCs and BCM send failure information to the FCDCs which analyze, store and send maintenance messages to the Central Maintenance Computers (CMCs). This is the Electrical Flight Control System (EFCS) part (primary flight controls).
For the high lift part, the SFCCs send failure data directly to the CMCs.
Maintenance message interrogation is done using the MCDU. The SYSTEM REPORT/TEST function of the Central Maintenance System (CMS) ground menu gives access to an interactive mode which allows the retrieval of flight control system troubleshooting data and can initiate EFCS and SFCC system tests.

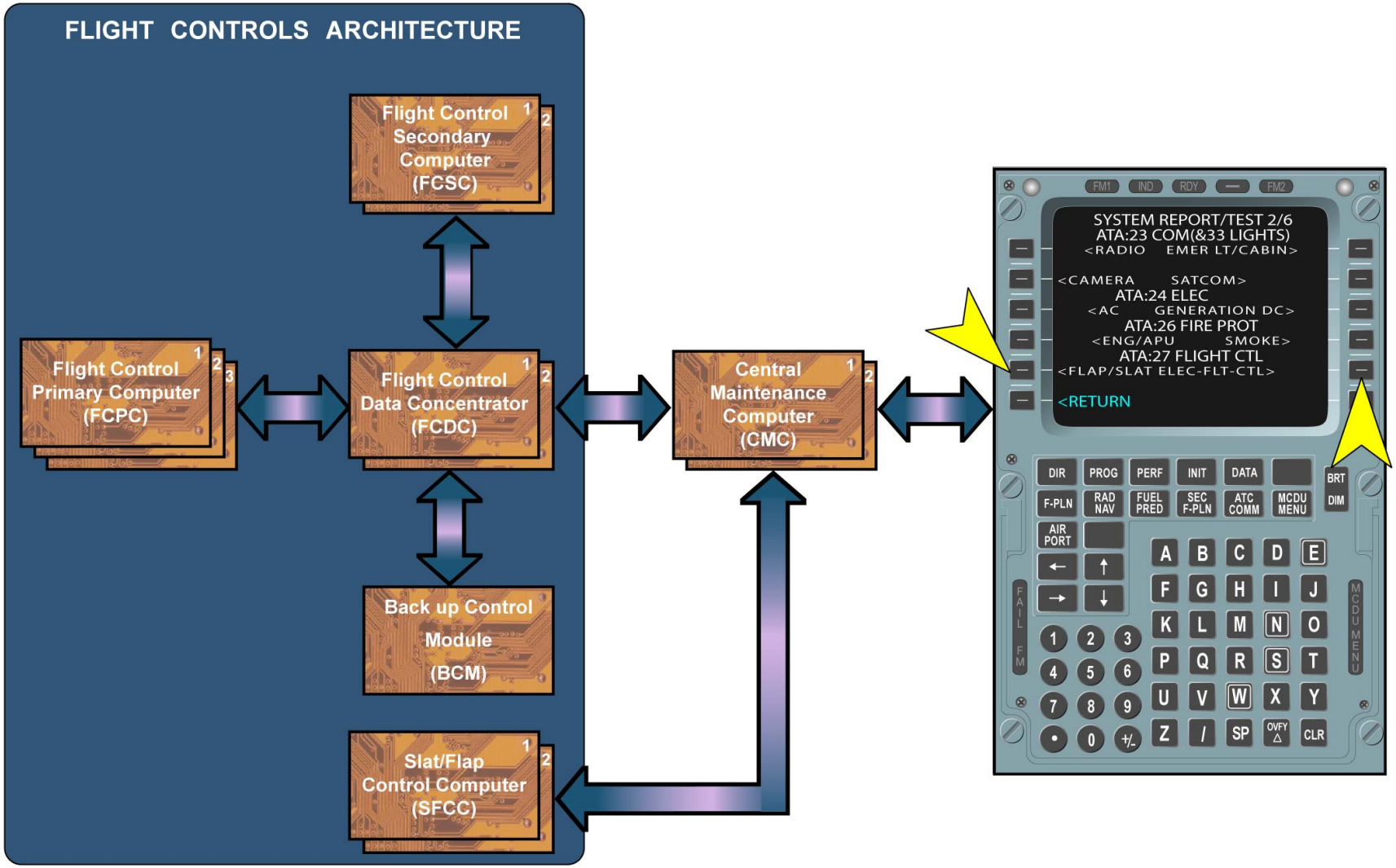

GENERAL

G7508471 - G3NT1T0 - FM27P4MCDUTST02

FLIGHT CONTROLS MCDU PAGES (2)

ELECTRONIC FLIGHT CONTROL SYSTEM

From the main menu of the SYSTEM REPORT/TEST page, it is possible to select the ELEC-FLT-CTL system menu. EFCS 1 and 2 permit access to the system tests managed by the FCDCs. EFCS 1 main menu is linked to FCDC 1, EFCS 2 to FCDC 2.
Both EFCS menus give access to a classic type 1 computer menu with GND SCANNING capability and specific functions as follows.
The SYSTEM TEST checks failures affecting the EFCS present at the time of request. This test forces the FCPCs, FCSCs and the opposite FCDC to run their power-up self-tests.
The SCTL TEST menu accesses the damping tests for the elevator, aileron and rudder servo controls.
The SCTL TEST menu also permits a test of the rudder electrical backup with the BCM.

NOTE: On the A340-500/600 only, the two Enhanced Runaway Protection (ERP) devices fitted on the THS actuator can also be tested through the SCTL TEST menu.

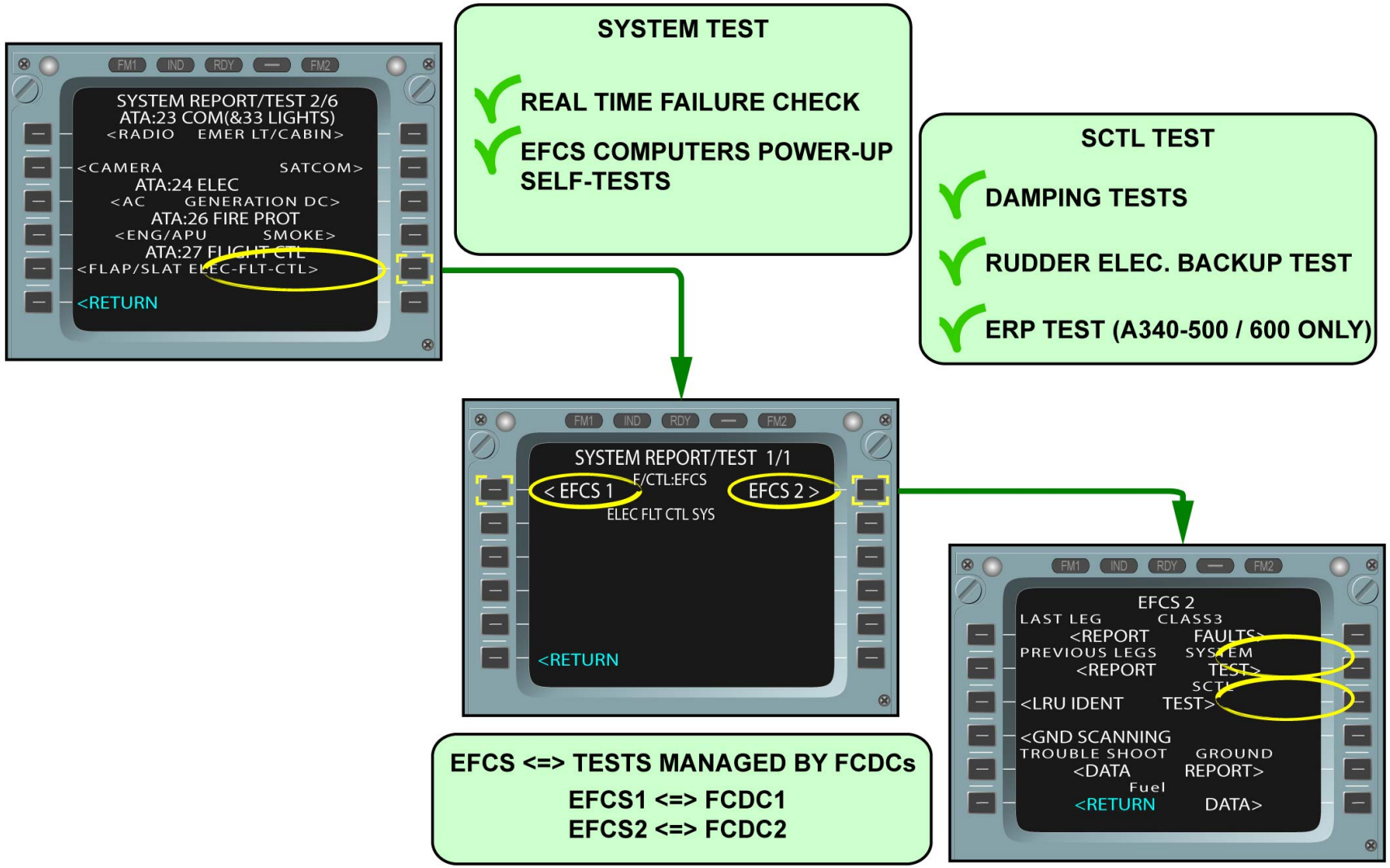

ELECTRONIC FLIGHT CONTROL SYSTEM

FLIGHT CONTROLS MCDU PAGES (2)

SLAT FLAP CONTROL COMPUTER

From the main menu of the SYSTEM REPORT/TEST page, it is possible to select the FLAP/SLAP system menu.
Tests can be performed from SFCC 1 or 2. Each computer permits access to two dedicated menus. One for the SLAT system and one for the FLAP system.
The SLAT menu gives access to a classic type 1 computer menu with GND SCANNING capability and specific functions.
The SFCC TEST menu checks for internal SFCC failures and internal or external system failures.
The PCU/WTB TEST/RESET menu enables you to perform several interactive tests:
- check of the performance of the Pressure Off Brakes (POB) of the Wing Tip Brake (WTB) and the slat Power Control Unit (PCU),
- test of the WTB engagement,
- slat PCU failure search,
- reset of the slat WTBs after a system failure.

The SPECIFIC DATA menu gives data about slat system signals transmitted to the SFCC.
The FLAP menu gives access to a classic type 1 computer menu with GND SCANNING capability and specific functions.
The SYSTEM TEST menu checks for internal SFCC failures and internal or external system failures.
The PCU/WTB TEST/RESET menu enables you to perform several interactive tests:
- check of the performance of the POB of the WTB and the flap PCU,
- test of the WTB engagement,
- flap PCU failure search,
- reset of the flap WTBs after a system failure.

The SPECIFIC DATA menu gives data about flap system signals transmitted to the SFCC.

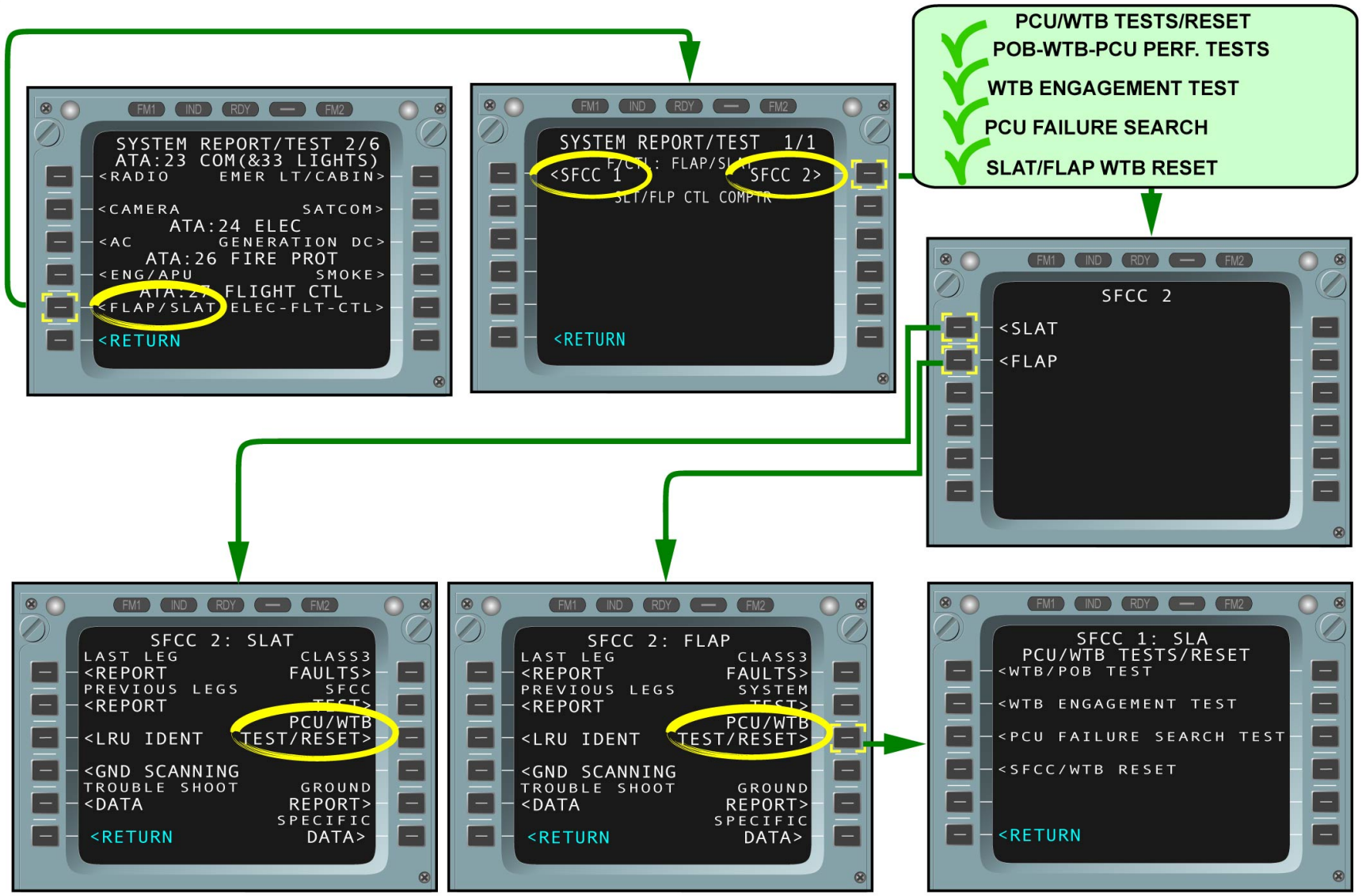

SLAT FLAP CONTROL COMPUTER

G7508471 - G3NT1T0 - FM27P4MCDUTST02

FLIGHT CONTROLS SYSTEM BASE MAINTENANCE (3)

INTRODUCTION

To highlight the adjustment principle applicable to the "fly by wire" flight controls, three maintenance tasks have been chosen:
- adjustment of the ailerons,
- adjustment of the rudder,
- adjustment of the elevators.

WARNING: MAKE SURE THAT THE SAFETY DEVICES AND THE WARNING NOTICES ARE IN POSITION BEFORE YOU START A TASK ON OR NEAR:
- THE FLIGHT CONTROLS,
- THE FLIGHT CONTROL SURFACES,
- THE LANDING GEAR AND THE RELATED DOORS,
- COMPONENTS THAT MOVE.

MOVEMENT OF COMPONENTS CAN KILL OR INJURE PERSONS.
MAKE SURE THAT THE TRAVEL RANGES OF THE FLIGHT CONTROLS ARE CLEAR. MOVEMENT OF FLIGHT CONTROLS CAN CAUSE INJURY TO PERSONS AND/OR DAMAGE.

WARNING

WARNING: MAKE SURE THAT THE SAFETY DEVICES AND THE WARNING NOTICES ARE IN POSITION BEFORE YOU START A TASK ON OR NEAR:
- THE FLIGHT CONTROLS,
- THE FLIGHT CONTROL SURFACES,
- THE LANDING COMPONENTS THAT MOVE.
MOVEMENT OF COMPONENTS CAN KILL OR INJURE PERSONS;

WARNING

WARNING: MAKE SURE THAT THE TRAVEL RANGES OF THE FLIGHT CONTROLS ARE CLEAR. MOVEMENT OF FLIGHT CONTROLS CAN CAUSE INJURY TO PERSONS AND/OR DAMAGE.

INTRODUCTION

FLIGHT CONTROLS SYSTEM BASE MAINTENANCE (3)

ADJUSTMENT OF THE AILERONS

Each aileron surface is actuated by two identical servocontrols. The inboard and outboard ailerons do not have the same servocontrols. Nevertheless, the adjustment procedure is identical for all aileron surfaces.
The first step consists in pressurizing the green hydraulic circuit. Also make sure that the blue and the yellow hydraulic circuits are depressurized.
On the FLT CTL sections of the overhead panel, make sure that all flight controls computer P/BSWs are pressed in (the OFF and FAULT legends are not illuminated).
Make sure that the flaps and slats are in the fully retracted position.
Install the side stick locking pin on the CAPT and F/O side sticks. Do not forget to put warning notices on the side sticks to tell personnel not to use them.
Gain access to the green servocontrol which is in the active mode. Put a straight edge on the adjacent structure of the aileron and measure the position of the aileron with a graduated scale.
If the position of the aileron is not satisfactory, adjust the green servocontrol as follows:
-remove the screws and the protective plate on A340-500/600, remove the plug from the servocontrol on A330 and A340-300,
-operate the adjustment device of the Linear Variable Differential Transducer (LVDT) unit until the aileron trailing edge is within the tolerances,
-install the protective plate and the screws on A340-500/600, remove the plug from the servocontrol on A330 and A340-300,
-note the position of the aileron trailing edge.
Pressurize the blue or yellow hydraulic system depending on the aileron you are working on. Blue is for the inboard ailerons and yellow for outboard ailerons. Depressurize the green hydraulic system.
Measure the new position of the aileron with the other servocontrol in active mode. If the distance between the two positions is not within the tolerance (refer to Aircraft Maintenance Manual (AMM) for correct value), adjust the active servocontrol as previously explained.
Remove the straight edge and the graduated scale. Remove the safety pins and the warning notices on the side sticks.
Do the operational test of the aileron and hydraulic actuation.
If no other tasks have to be completed, the area can be closed ensuring all tools, test and support used during this procedure are removed.

ADJUSTMENT OF THE AILERONS

...
Job set-up
...

Make sure that:

...
Procedure
...

Adjustment of the ailerons:

...
Close-up
...

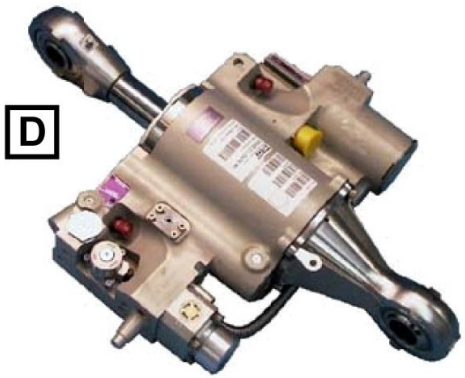

OUTBOARD AILERON SERVOCONTROL

INBOARD AILERON SERVOCONTROL

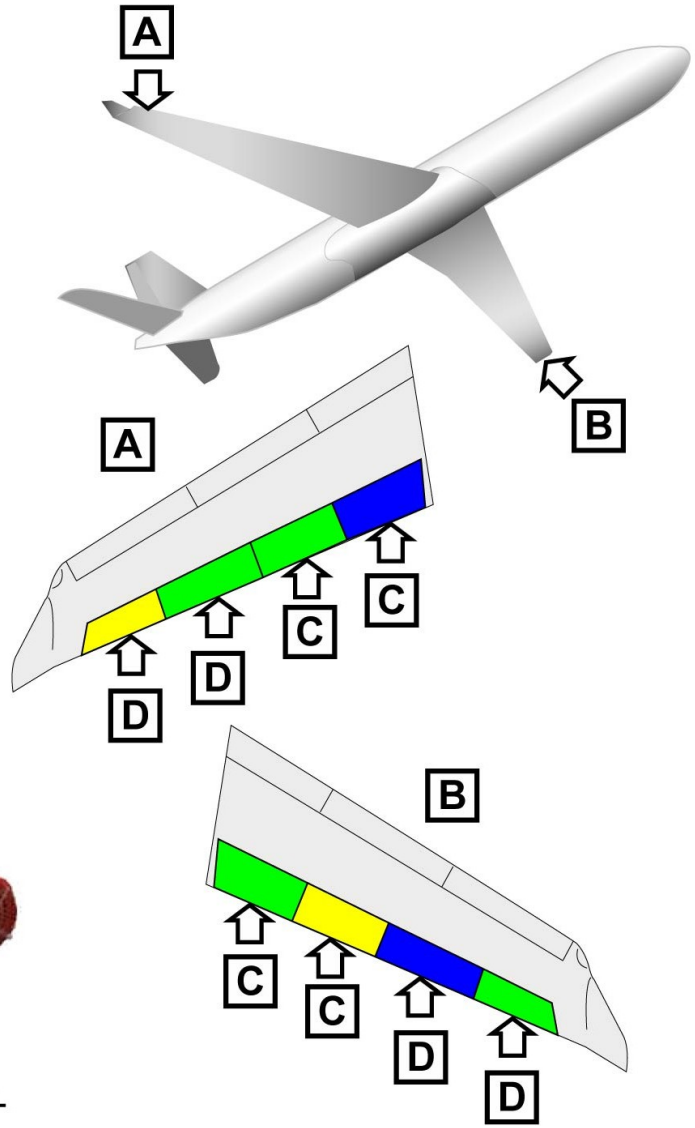

ADJUSTMENT OF THE AILERONS

ADJUSTMENT OF THE AILERONS

...

Job set-up

...

Make sure that:

- Green hydraulic system pressurized and Blue and Yellow hydraulic systems depressurized.
- Flight controls computer P/BSW pressed in.
- Flaps and Slats fully retracted.
- Safety pin and warning notice on side sticks.

...

Procedure

...

Adjustment of the ailerons:

...

Close-up

...

LOCKING PIN

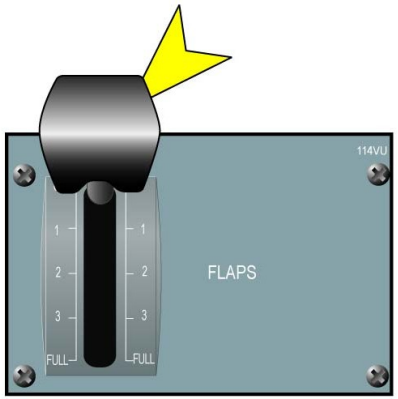

FOR A340-500/600

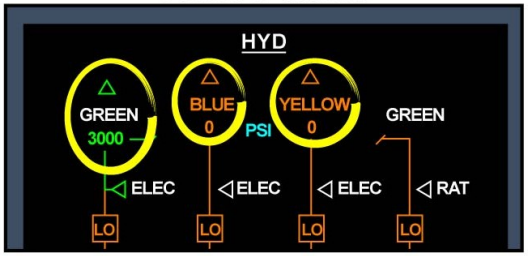

FOR A330 AND A340

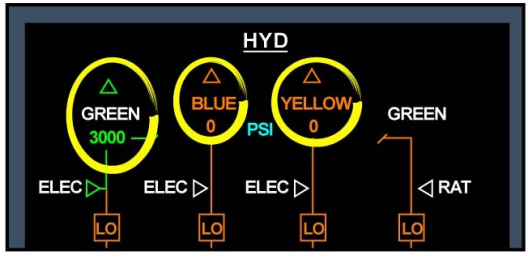

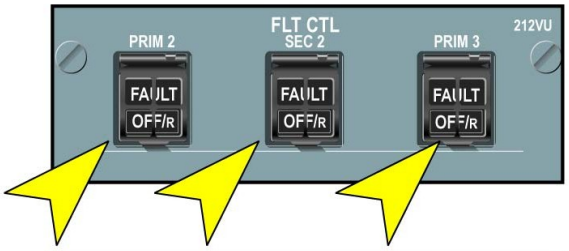

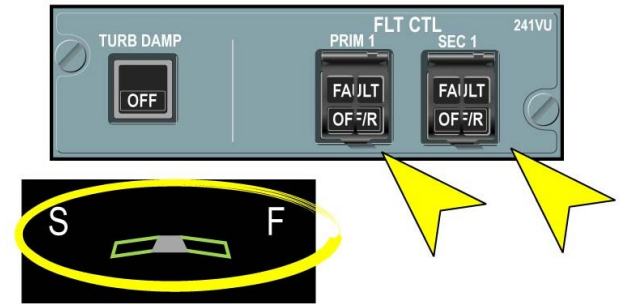

ADJUSTMENT OF THE AILERONS

ADJUSTMENT OF THE AILERONS

...

✓ **Job set-up**

...

✓ **Make sure that:**

...

⇨ **Procedure**

...

⇨ **Adjustment of the ailerons:**

⇨ - Measure the aileron position.

- Adjust the pressurized servocontrol if necessary.
- Pressurize the adjacent servocontrol (Blue or Yellow). Depressurize the Green hydraulic system.
- Measure the new aileron position. Adjust the active servocontrol if necessary.
- Remove the tool.
- Do the operational test.

...

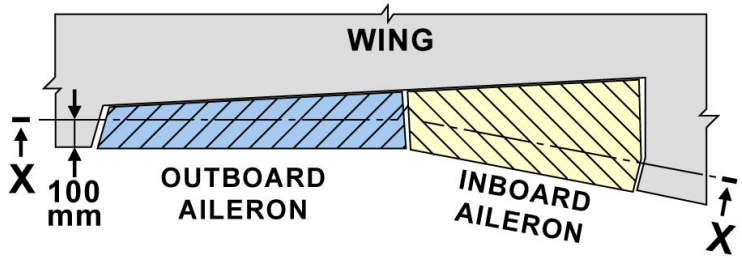

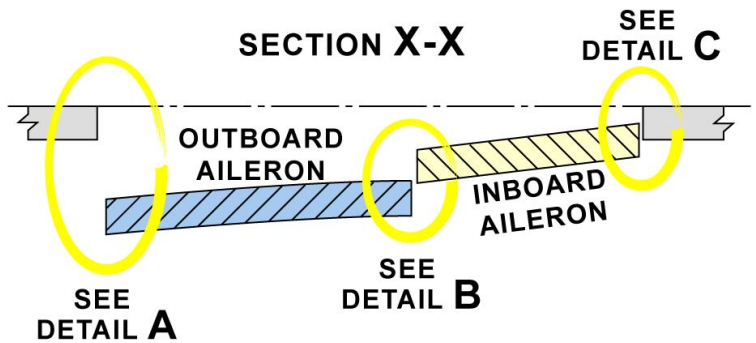

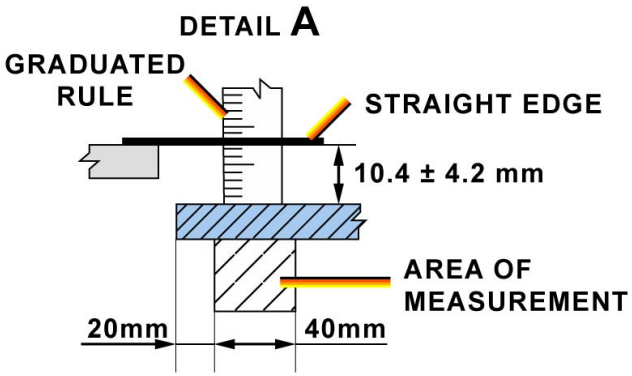

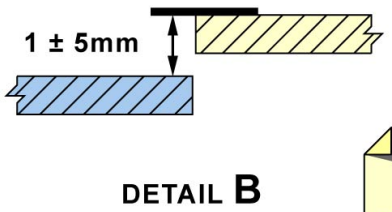

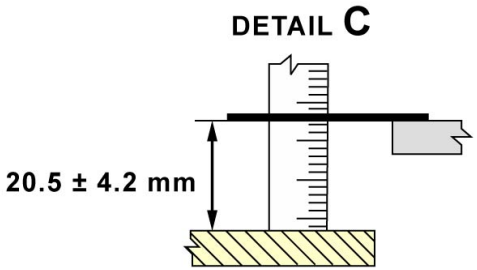

DIMENSIONS APPLICABLE ONLY ON A340-500/600 (REFER TO AMM FOR A330, A340-200/300)

ADJUSTMENT OF THE AILERONS

ADJUSTMENT OF THE AILERONS

...
✓ **Job set-up**
...

✓ **Make sure that:**

...
⇨ **Procedure**
...

⇨ **Adjustment of the ailerons:**

✓ - Measure the aileron position.

⇨ - Adjust the pressurized servocontrol if necessary.

- Pressurize the adjacent servocontrol (Blue or Yellow). Depressurize the Green hydraulic system.

- Measure the new aileron position. Adjust the active servocontrol if necessary.

- Remove the tool.

- Do the operational test.

...

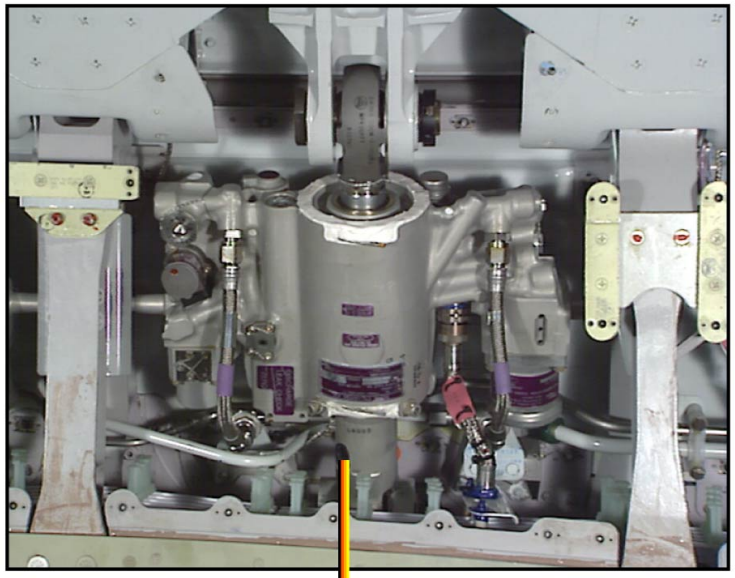

ADJUSTMENT DEVICE

A340-600 ONLY

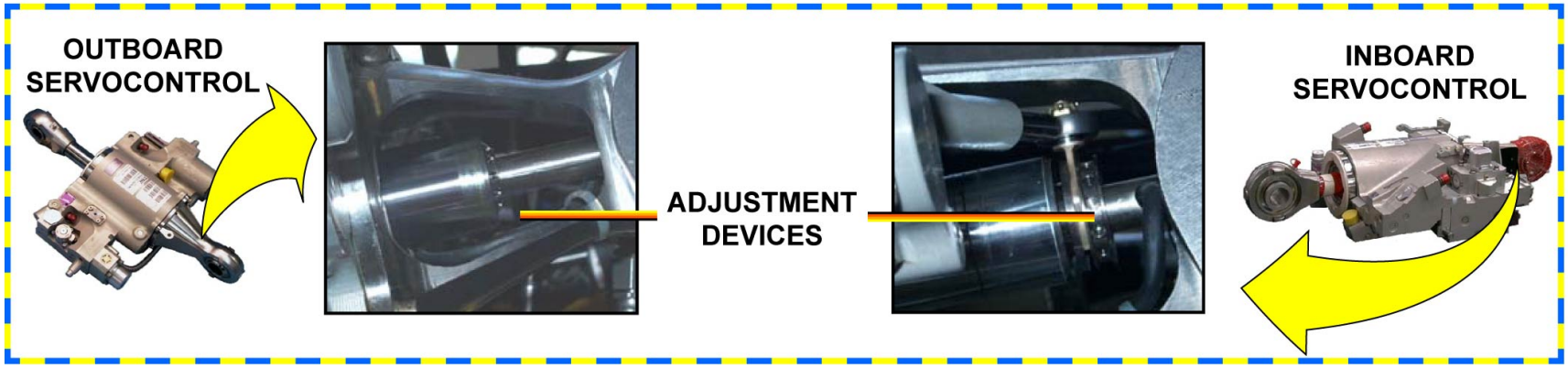

ADJUSTMENT OF THE AILERONS

ADJUSTMENT OF THE AILERONS

...

Job set-up

...

Make sure that:

...

Procedure

...

Adjustment of the ailerons:

- Measure the aileron position.
- Adjust the pressurized servocontrol if necessary.
- Pressurize the adjacent servocontrol (Blue or Yellow). Depressurize the Green hydraulic system.
- Measure the new aileron position. Adjust the active servocontrol if necessary.
- Remove the tool.
- Do the operational test.

...

FOR A340-500/600

FOR A330 AND A340

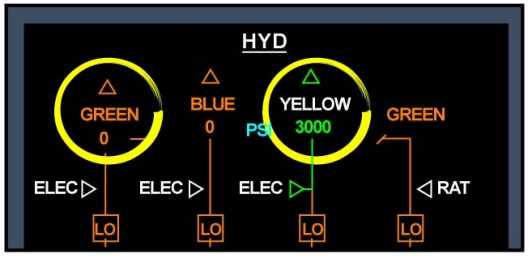

THE OUTBOARD AILERONS HAVE BEEN CHOSEN AS AN EXAMPLE. THEREFORE, THE YELLOW HYDRAULIC SYSTEM MUST BE PRESSURIZED. THE OUTBOARD AILERONS ARE ACTUATED BY ONE GREEN AND ONE YELLOW SERVOCONTROLS.

THE PROCEDURE IS IDENTICAL FOR THE INBOARD AILERONS WITH THE BLUE HYDRAULIC SYSTEM PRESSURIZED.

ADJUSTMENT OF THE AILERONS

ADJUSTMENT OF THE AILERONS

...
✓ **Job set-up**
...
✓ **Make sure that:**
...
⇨ **Procedure**
...
⇨ **Adjustment of the ailerons:**
- ✓ - Measure the aileron position.
- ✓ - Adjust the pressurized servocontrol if necessary.
- ✓ - Pressurize the adjacent servocontrol (Blue or Yellow). Depressurize the Green hydraulic system.
- ⇨ - Measure the new aileron position. Adjust the active servocontrol if necessary.
- Remove the tool.
- Do the operational test.

...

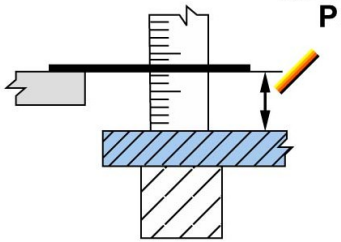

PREVIOUS AILERON POSITION
XX.X mm

NEW AILERON POSITION
YY.Y mm

IF DIFFERENCE > 1mm ⇨ ADJUST

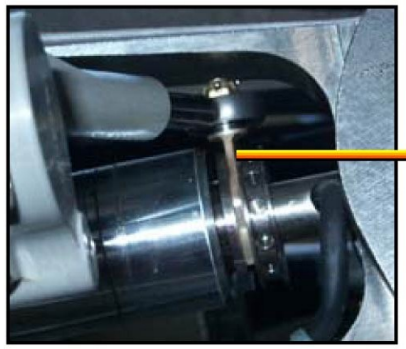

INBOARD AILERON

ADJUSTMENT DEVICES

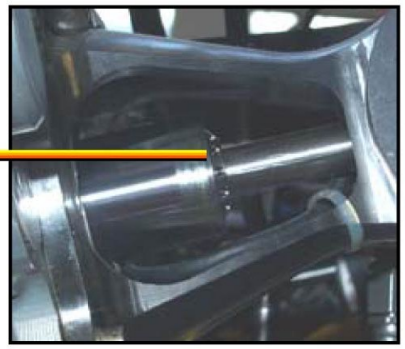

OUTBOARD AILERON

ADJUSTMENT OF THE AILERONS

ADJUSTMENT OF THE AILERONS

...

Job set-up

...

Make sure that:

...

Procedure

...

Adjustment of the ailerons:

- Measure the aileron position.
- Adjust the pressurized servocontrol if necessary.
- Pressurize the adjacent servocontrol (Blue or Yellow). Depressurize the Green hydraulic system.
- Measure the new aileron position. Adjust the active servocontrol if necessary.
- Remove the tool.
- Do the operational test.

...

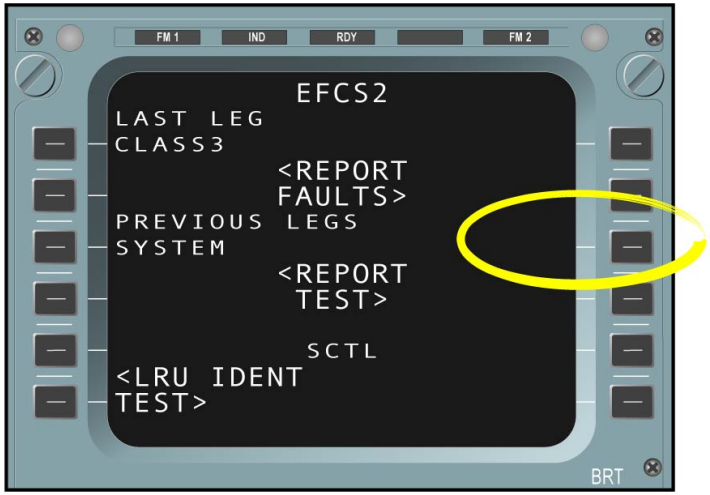

ADJUSTMENT OF THE AILERONS

ADJUSTMENT OF THE AILERONS

...
✓ **Job set-up**
...

✓ **Make sure that:**

...
✓ **Procedure**
...

✓ **Adjustment of the ailerons:**

...
⇨ **Close-up**
...

⇨ - Make sure the work area is clean and clear.

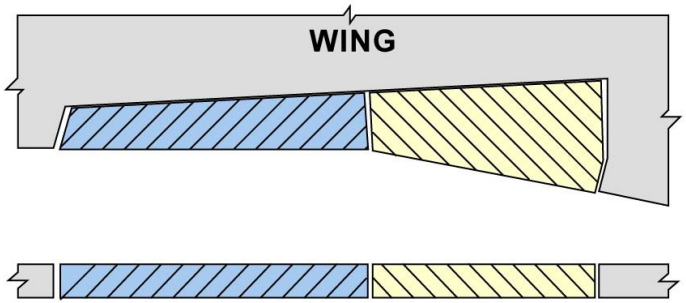

TASK COMPLETED

ADJUSTMENT OF THE AILERONS

This Page Intentionally Left Blank

G7508471 - G3NT1T0 - FM27Y2BASEMCE02

FLIGHT CONTROLS SYSTEM BASE MAINTENANCE (3)

ADJUSTMENT OF THE RUDDER

The rudder is actuated by 3 servocontrols. The following procedure gives the adjustment of one servocontrol. The green servocontrol has been chosen as an example, the procedure is identical for the other servocontrols.
On the FLT CTL sections of the overhead panel, make sure that all flight control computer P/BSWs are pressed in (the OFF and FAULT legends are not illuminated).
Install the locking pins and the warning notices on the side sticks and on the rudder pedals.
On the RUD TRIM control panel, make sure that the indicator shows 0.
You also have to place warning notices to tell personnel not to use the rudder trim control panel.
Pressurize the hydraulic system corresponding to the servocontrol to be adjusted. For this example the green one has been chosen.
Make sure that the rudder trailing edge is aligned with the reference triangle on the tail cone. The scale of tolerance is a few millimeters (refer to AMM for precise value).
If the rudder trailing edge is not aligned, you must operate the adjustment device on the rudder servocontrol. Operate this device until the rudder trailing edge is aligned with the reference triangle.
You also have to check that the rigging pins of the rudder position transducers can be inserted and removed freely.
Repeat the adjustment procedure for the two other servocontrols.
Remove the locking pins on the side sticks and the rigging pin on the rudder pedals. Perform the operational test of the rudder hydraulic actuation.
If no other tasks have to be performed, the area can be closed ensuring all tools, test and support used during this procedure are removed.

ADJUSTMENT OF THE RUDDER

...
Job set-up
...

Make sure that:

...
Procedure
...

Adjustment of the rudder:

...
Close-up
...

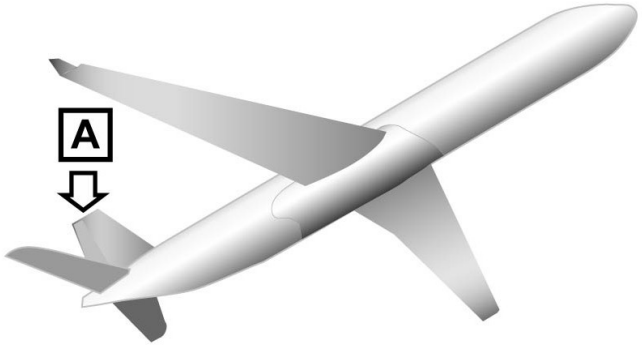

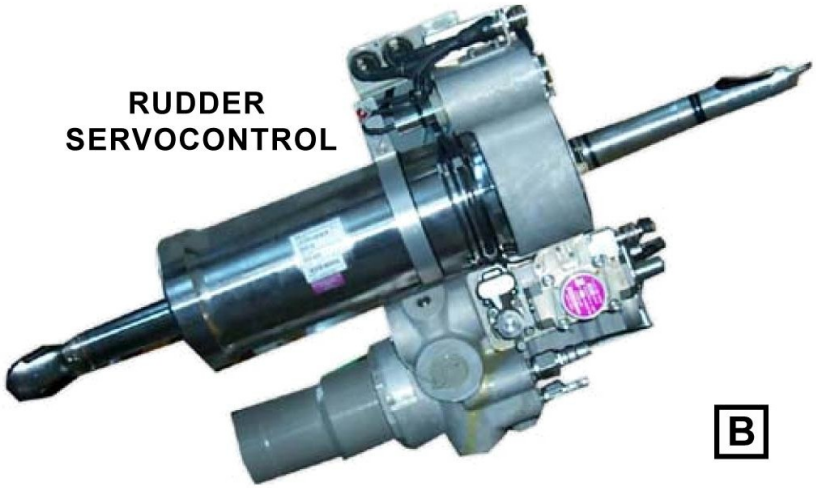

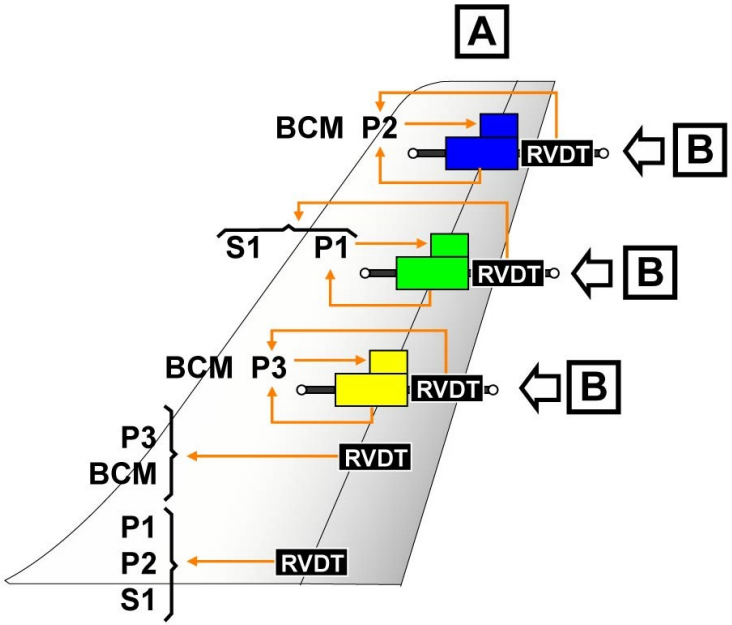

ADJUSTMENT OF THE RUDDER

ADJUSTMENT OF THE RUDDER

...
Job set-up
...

Make sure that:

- Flight controls computers P/BSW pressed in.
- Locking pins and warning notices in position.
- RUD TRIM at 0 and warning notice.
- Green hydraulic system pressurized.

...
Procedure
...

Adjustment of the rudder:

...
Close-up
...

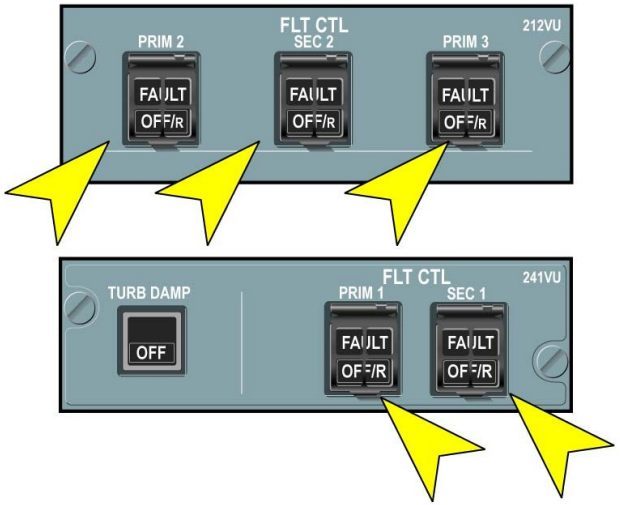

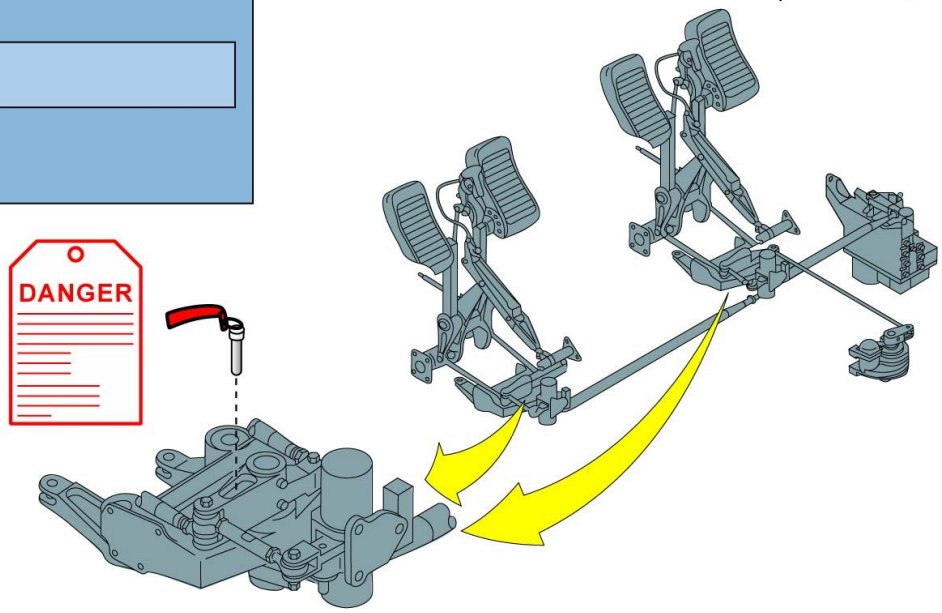

ADJUSTMENT OF THE RUDDER

ADJUSTMENT OF THE RUDDER

...
Job set-up
...

Make sure that:

- ✓ - Flight controls computers P/BSW pressed in.
- ✓ - Locking pins and warning notices in position.
- ✓ - RUD TRIM at 0 and warning notice.
- ⇨ - Green hydraulic system pressurized.

...
Procedure
...

Adjustment of the rudder:

...
Close-up
...

FOR A340-500/600

FOR A330 AND A340

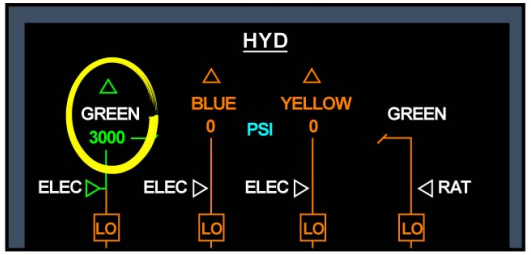

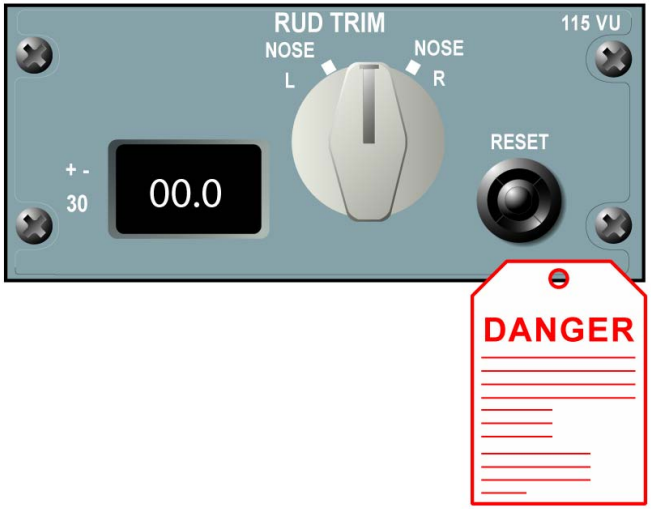

ADJUSTMENT OF THE RUDDER

ADJUSTMENT OF THE RUDDER

...
✓ **Job set-up**
...

✓ **Make sure that:**

...
⇨ **Procedure**
...

⇨ **Adjustment of the rudder:**

- ✓ - Check rudder alignment.
- ✓ - Adjust the pressurized servocontrol if necessary.
- ✓ - Check the transducers rigging pin.
- ⇨ - Repeat the operation with the two other servocontrols.
- - Remove the tools. Perform operational test.

...
Close-up
...

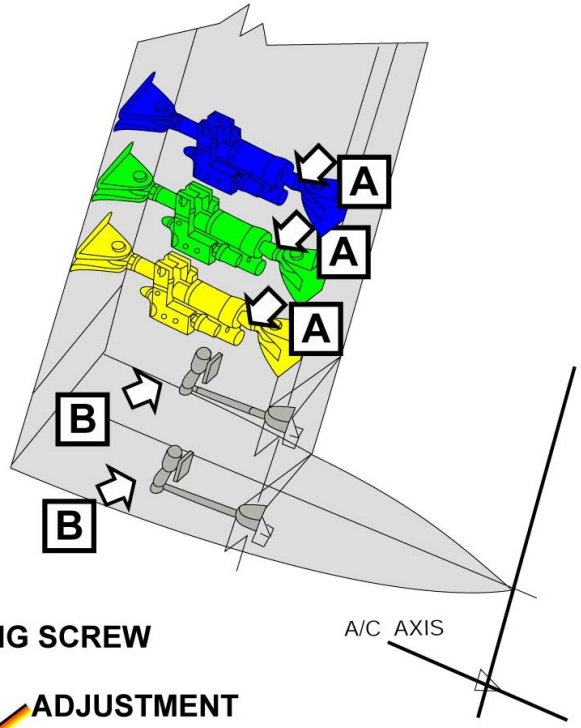

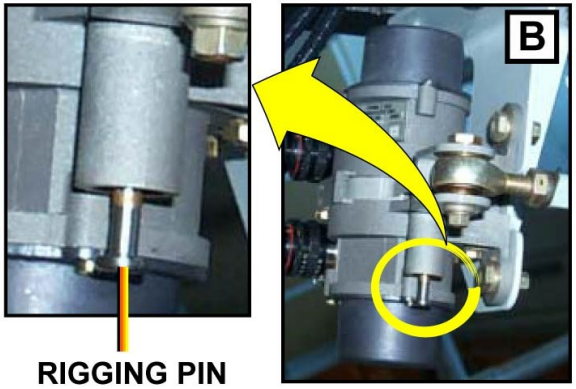

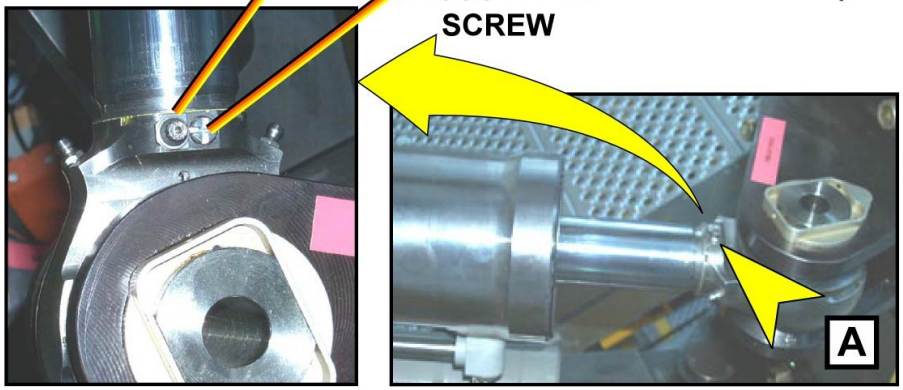

ADJUSTMENT OF THE RUDDER

ADJUSTMENT OF THE RUDDER

...
✓ **Job set-up**
...

✓ **Make sure that:**

...
⇨ **Procedure**
...

⇨ **Adjustment of the rudder:**

- ✓ - Check rudder alignment.
- ✓ - Adjust the pressurized servocontrol if necessary.
- ✓ - Check the transducers rigging pin.
- ✓ - Repeat the operation with the two other servocontrols.
- ⇨ - Remove the tools. Perform operational test.

...
Close-up
...

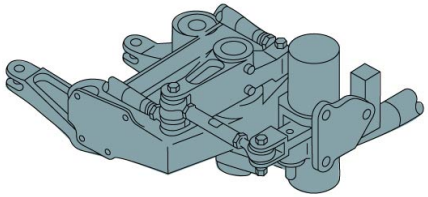

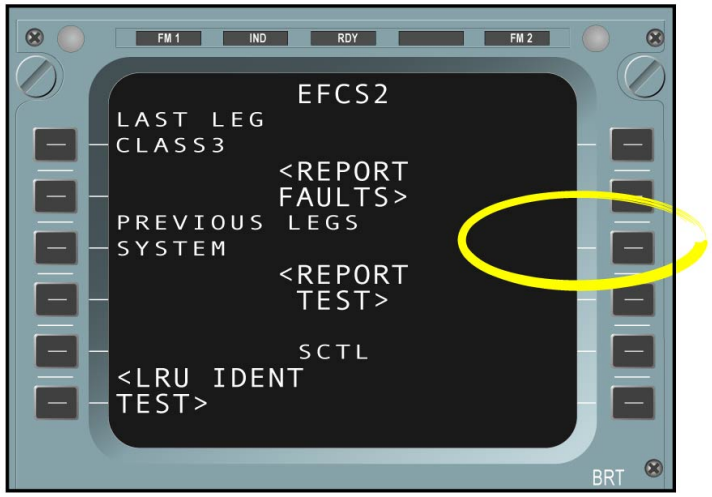

ADJUSTMENT OF THE RUDDER

ADJUSTMENT OF THE RUDDER

...
✓ **Job set-up**
...

✓ **Make sure that:**

...
✓ **Procedure**
...

✓ **Adjustment of the rudder:**

...
⇨ **Close-up**
...

⇨ - Make sure the work area is clean and clear.

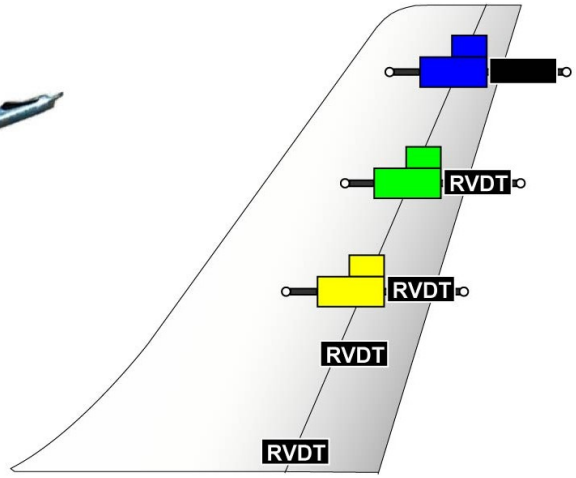

TASK COMPLETED

ADJUSTMENT OF THE RUDDER

This Page Intentionally Left Blank

G7508471 - G3NT1T0 - FM27Y2BASEMCE02

FLIGHT CONTROLS SYSTEM BASE MAINTENANCE (3)

ADJUSTMENT OF THE ELEVATORS

The A/C is fitted with two elevators. Each elevator is actuated by two servocontrols. The following procedure deals with the adjustment of the left elevator. The procedure is the same for the RH one.
On the FLT CTL sections of the overhead panel, make sure that all flight controls computer P/BSWs are pressed in (the OFF and FAULT legends are not illuminated).
Trim control wheel for A340. Install the locking pins on the side sticks. You also have to put warning notices in position to tell personnel not to use the side sticks and the pitch trim wheels.
Pressurize the hydraulic systems.
Release out the green LEAK MEASUREMENT VALVE P/BSW (the OFF legend comes on) and note the position of the elevator trailing edge.
Check that the rigging pin of the elevator position transducer unit can be inserted and removed freely.
If not, set the green LEAK MEASUREMENT VALVE to normal (P/BSW pressed in) and set the blue LEAK MEASUREMENT VALVE to "OFF" (P/BSW released out).
For the A330-200/300 and the A340-200/300, loosen the nut and disengage the lock washer. Turn the rod in the correct direction until the transducer unit rigging pin can be inserted and removed freely.
For the A340-500/600, remove the protective plate to gain access to the LVDT adjustment device. Adjust the LVDT until the transducer unit rigging pin can be inserted and removed freely.
Check the new trailing edge position with that recorded earlier. If it is different by more than 3 mm, the servo actuator must be adjusted using the elevator neutral-setting gauge. If the distance between the two positions is less than 3 mm, the servocontrol is correctly adjusted.
Now, adjust the adjacent servocontrol. The procedure is the same as the one done previously.
Once both servocontrols are adjusted, check that all LEAK MEASUREMENT VALVES are pressed in (no OFF legends). Remove the locking pins on the side sticks. Perform the operational test of the elevator and hydraulic actuation.
If no other tasks have to be performed, the area can be closed ensuring all tools, test and support used during this procedure are removed.

ADJUSTMENT OF THE ELEVATORS

...
Job set-up
...

Make sure that:

...
Procedure
...

Adjustment of the elevators:

...
Close-up
...

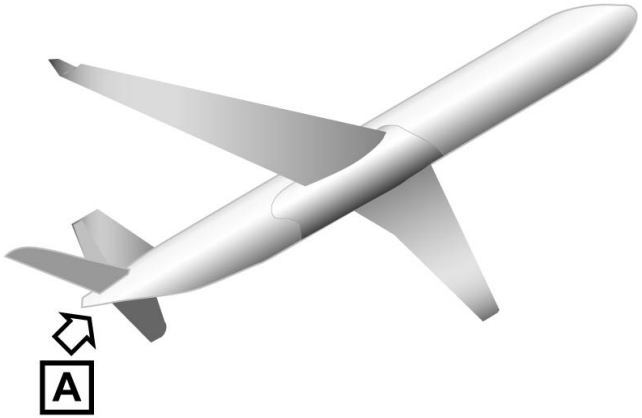

ELEVATOR SERVOCONTROLS

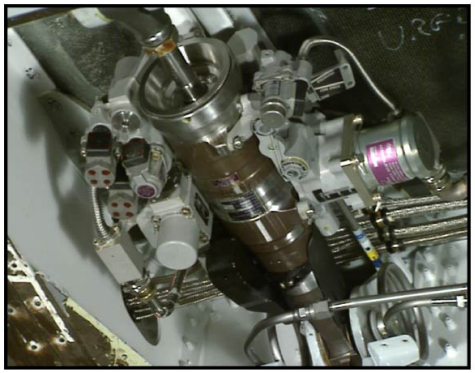

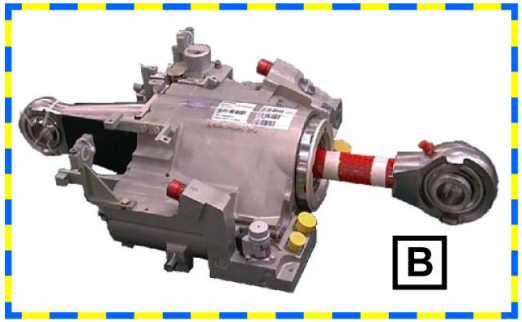

B

A340-600 ONLY

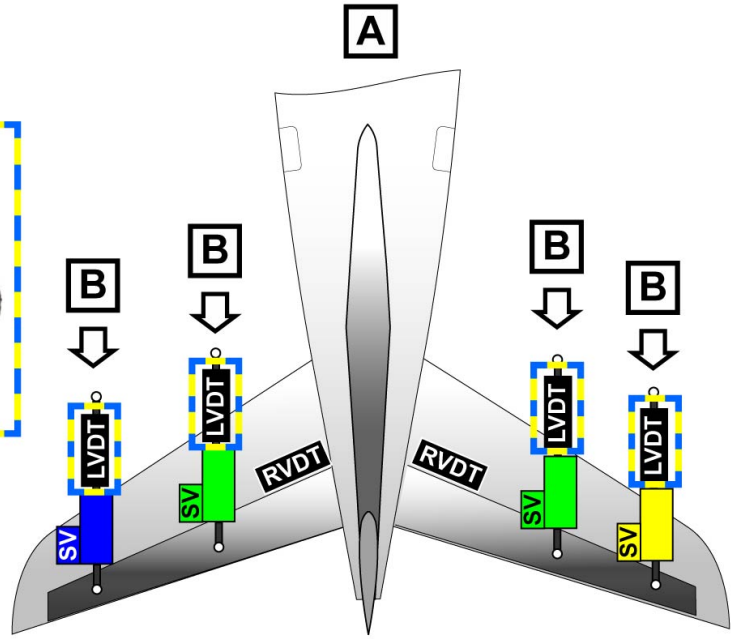

ADJUSTMENT OF THE ELEVATORS

ADJUSTMENT OF THE ELEVATORS

...

Job set-up

...

Make sure that:

- Flight controls computers P/BSW pressed in.
- Locking pins and warning notices in position.
- Hydraulic systems pressurized.

...

Procedure

...

Adjustment of the elevators:

...

Close-up

...

FOR A340-500/600

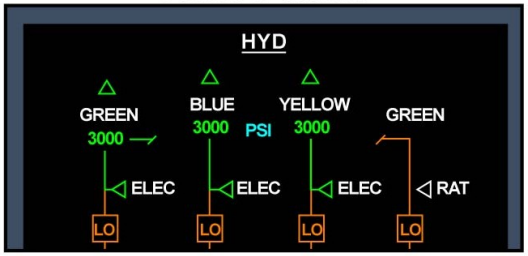

FOR A330 AND A340

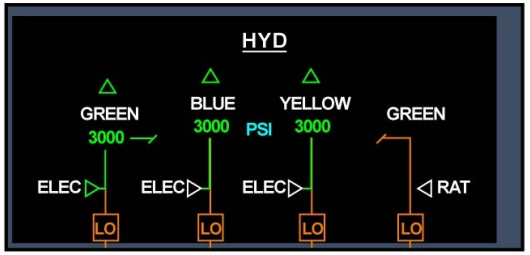

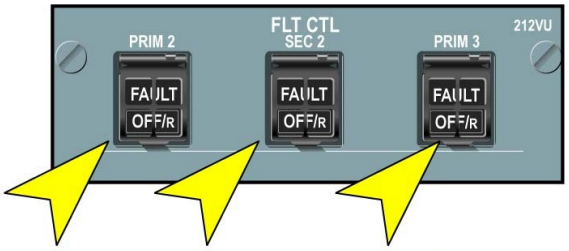

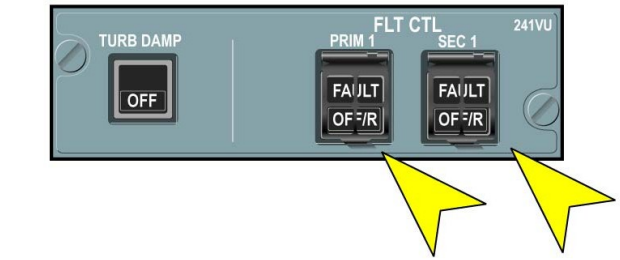

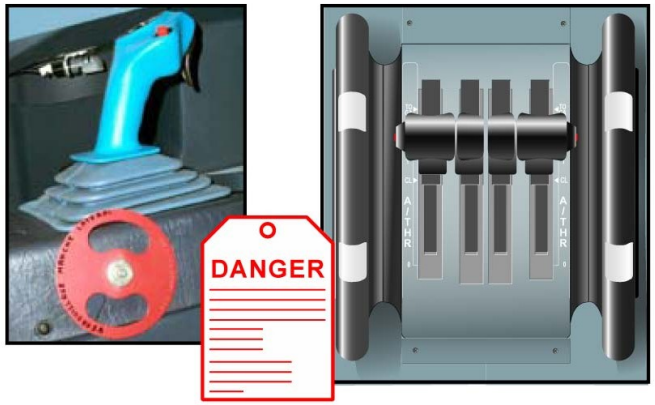

TRIM CONTROL WHEEL FOR A340

ADJUSTMENT OF THE ELEVATORS

ADJUSTMENT OF THE ELEVATORS

...

✓ **Job set-up**

...

✓ **Make sure that:**

...

⇨ **Procedure**

...

⇨ **Adjustment of the elevators:**

✓ - Green LEAK MEASUREMENT VALVE pbsw release out. Note the elevator position.

⇨ - Check the transducer rigging pin free insertion and removal.

- If not, Green back to normal and Blue "OFF".
- Operate the elevator adjustment device.
- Check the new elevator position.
- Repeat the operation for the adjacent servocontrol.
- Check LEAK MEASUREMENT VALVES pressed in. Remove the tools. Perform operational test.

...

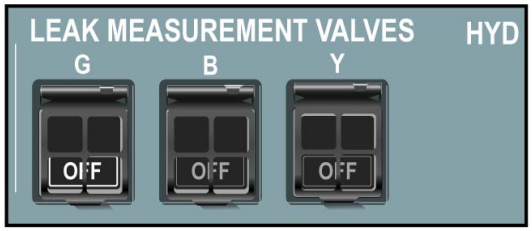

(285VU)

ELEVATOR POSITION

XX.X mm

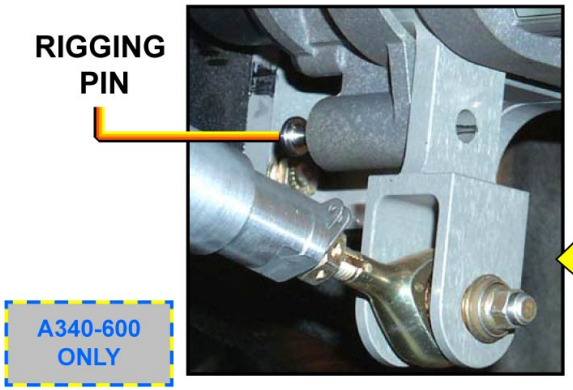

A340-600 ONLY

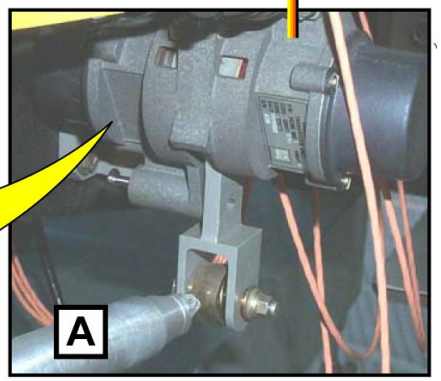

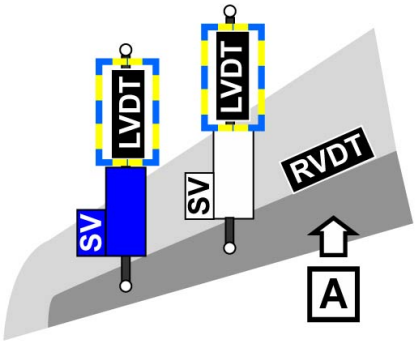

LEFT ELEVATOR

ADJUSTMENT OF THE ELEVATORS

ADJUSTMENT OF THE ELEVATORS

...
✓ **Job set-up**
...
✓ **Make sure that:**
...
⇨ **Procedure**
...
⇨ **Adjustment of the elevators:**
- ✓ - Green LEAK MEASUREMENT VALVE pbsw release out. Note the elevator position.
- ✓ - Check the transducer rigging pin free insertion and removal.
- ✓ - If not, Green back to normal and Blue "OFF".
- ✓ - Operate the elevator adjustment device.
- ⇨ - Check the new elevator position.
- - Repeat the operation for the adjacent servocontrol.
- - Check LEAK MEASUREMENT VALVES pressed in. Remove the tools. Perform operational test.

...

PREVIOUS ELEVATOR POSITION
XX.X mm

NEW ELEVATOR POSITION
YY.Y mm

IF DIFFERENCE > 3 mm ⇨ Neutral setting gauge

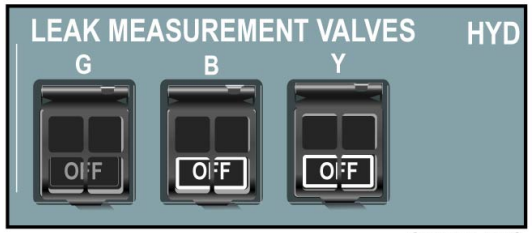

(285VU)

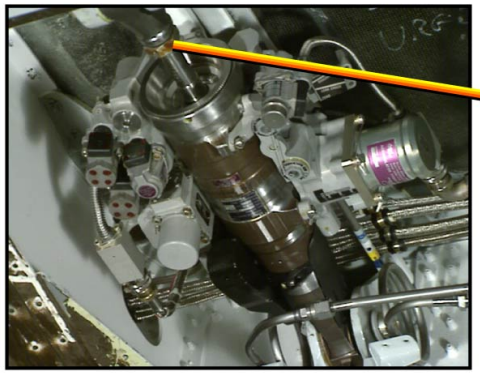

ADJUSTMENT DEVICES

A340-600 ONLY

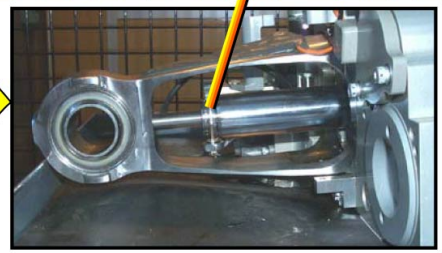

GREEN SERVOCONTROL

ADJUSTMENT OF THE ELEVATORS

ADJUSTMENT OF THE ELEVATORS

...
✓ **Job set-up**
...
✓ **Make sure that:**
...
⇨ **Procedure**
...
⇨ **Adjustment of the elevators:**
- ✓ - Green LEAK MEASUREMENT VALVE pbsw release out. Note the elevator position.
- ✓ - Check the transducer rigging pin free insertion and removal.
- ✓ - If not, Green back to normal and Blue "OFF".
- ✓ - Operate the elevator adjustment device.
- ✓ - Check the new elevator position.
- ⇨ - Repeat the operation for the adjacent servocontrol.
- - Check LEAK MEASUREMENT VALVES pressed in. Remove the tools. Perform operational test.

...

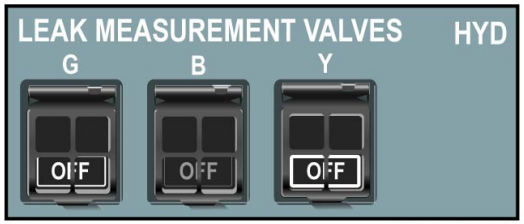

(285VU)

TRANSDUCER RIGGING PIN

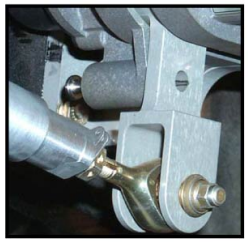

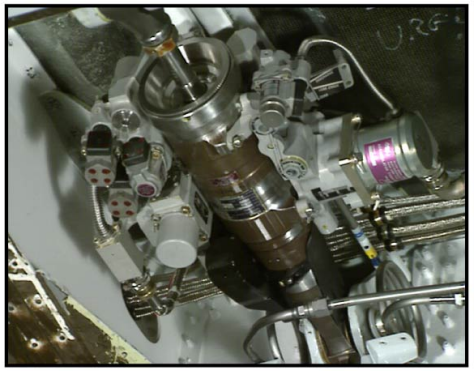

PREVIOUS ELEVATOR POSITION

XX.X mm

NEW ELEVATOR POSITION

YY.Y mm

IF DIFFERENCE > 3 mm ⇨ Neutral setting gauge

BLUE SERVOCONTROL

A340-600 ONLY

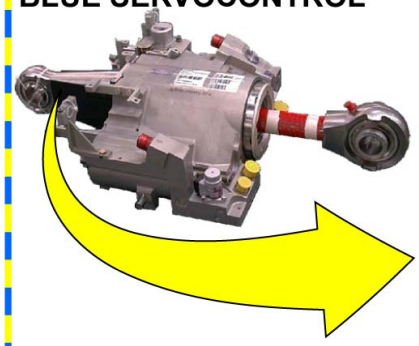

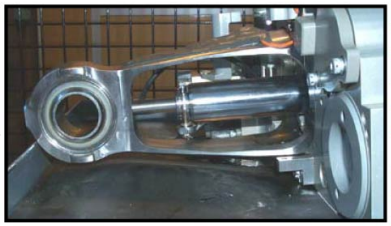

ADJUSTMENT OF THE ELEVATORS

ADJUSTMENT OF THE ELEVATORS

...
✓ **Job set-up**
...
✓ **Make sure that:**
...
⇨ **Procedure**
...
⇨ **Adjustment of the elevators:**
- ✓ - Green LEAK MEASUREMENT VALVE pbsw release out. Note the elevator position.
- ✓ - Check the transducer rigging pin free insertion and removal.
- ✓ - If not, Green back to normal and Blue "OFF".
- ✓ - Operate the elevator adjustment device.
- ✓ - Check the new elevator position.
- ✓ - Repeat the operation for the adjacent servocontrol.
- ⇨ - Check LEAK MEASUREMENT VALVES pressed in. Remove the tools. Perform operational test.

...

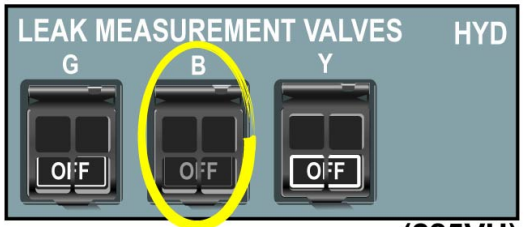

(285VU)

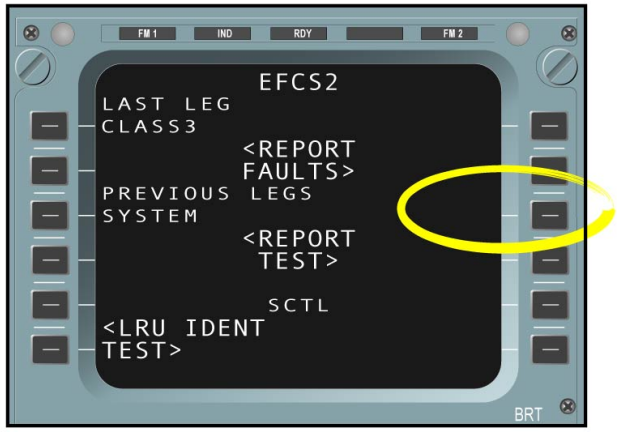

ADJUSTMENT OF THE ELEVATORS

ADJUSTMENT OF THE ELEVATORS

...
✓ **Job set-up**
...

✓ **Make sure that:**

...
✓ **Procedure**
...

✓ **Adjustment of the elevators:**

...
⇨ **Close-up**
...

⇨ - Make sure the work area is clean and clear.

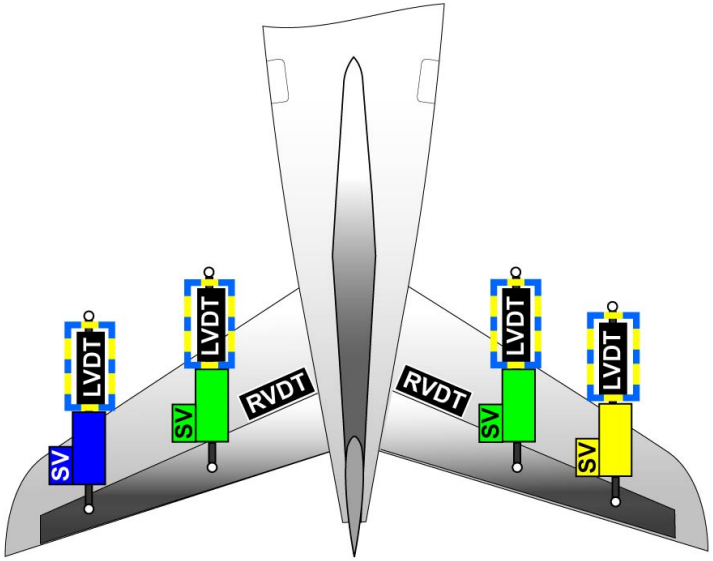

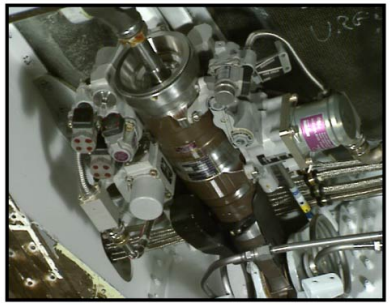

TASK COMPLETED

A340-600 ONLY

ADJUSTMENT OF THE ELEVATORS

AIRBUS S.A.S.
31707 BLAGNAC cedex, FRANCE
STM
REFERENCE G7508471
NOVEMBER 2008
PRINTED IN FRANCE
AIRBUS S.A.S. 2008
ALL RIGHTS RESERVED

AN EADS COMPANY

A330-200/300
TECHNICAL TRAINING MANUAL
MAINTENANCE COURSE - T1 (LVL 2&3) (RR Trent 700)
FUEL (Metric Units)

This document must be used for training purposes only

Under no circumstances should this document be used as a reference

It will not be updated.

All rights reserved
No part of this manual may be reproduced in any form,
by photostat, microfilm, retrieval system, or any other means,
without the prior written permission of AIRBUS S.A.S.

AIRBUS Environmental Recommendation
Please consider your environmental responsability before printing this document.

FUEL (METRIC UNITS)

Fuel Line Maintenance Briefing (2) 2

TANK, VENTING, SCAVENGE AND INDICATING

Fuel Tank D/O (3) 24
Fuel Tank Venting D/O (3) 32
Fuel Tank Indicating D/O (3) 36

FUEL FEED

Engine Feed D/O (3) 56
APU Feed D/O (3) 78

FUEL TRANSFERS

Main Transfer D/O (A330-200) 92
Main Transfer D/O (A330-300) 112
Trim Transfer D/O (A330-200) 124
Trim Transfer D/O (A330-300) 158

REFUEL/DEFUEL

Automatic Refuel (2) 184
Refuel/Defuel D/O (A330-200) 186
Refuel/Defuel D/O (A330-300) 224

JETTISON

Jettison D/O (A330-200) 260

MAINTENANCE PRACTICE

Fuel Tank Safety Procedures (2) 268
Fuel System Base Maintenance (3) 308

FUEL LINE MAINTENANCE BRIEFING (2)

SYSTEM OVERVIEW

The fuel system has different functions, which are:
- storage, venting and scavenge,
- engine feed,
- APU feed,
- main and trim transfers,
- refuel/defuel,
- jettison as an option,
- and the maintenance/test facilities.

A330-200 OVERVIEW

The fuel is stored in six tanks. In each wing, there is an outer tank, and an inner tank divided into two parts: the forward inner tank, and the aft inner tank. There is also a center tank, and a trim tank. Each inner tank section has one closed area called the collector cell, which is a reservoir for the booster pumps. A dedicated jet pump is only used to fill the collector cell of the main booster pumps. A vent surge tank is installed outboard of each outer tank in the wing and on the RH side of the trim tank. They vent the fuel tanks and collect fuel split from the tanks. Each tank has one or more water drain valves located at low points.

Engine Feed:

An independent fuel feed system supplies each engine. For each engine, there are two main fuel pumps, and one stand-by pump. In the normal configuration the main pumps are running and the stand-by pump is there as a back up when a main pump has a too low output pressure. A LP valve isolates its related engine from the fuel supply. The crossfeed system enables any engine to be fed from any tank. It is used to correct fuel imbalance between tanks or during gravity feeding of the engines.

APU Feed:

Fuel is supplied to the APU from the LH inner tank collector cell with the forward APU pump through the trim transfer line. If a low pressure is detected in the trim transfer line, the aft APU pump stars. The APU fuel isolation valve controls the fuel flow from the FWD inner tank to the trim transfer line. If an APU fire is detected, the APU LP valve closes. The fuel/air separator, installed in the trim tank fuel transfer line, keeps sufficient fuel for APU operation if air enters the transfer line.

Main Transfer:

The main transfer system controls the fuel flow from the center tank and the outer tanks to the two inner tanks for engine feeding. The two transfers are usually controlled automatically by the Fuel Control & Monitoring Computers (FCMCs), but they can be manually controlled if necessary. The trim transfer system controls the A/C center of gravity by forward and aft transfers. Trim transfers are controlled automatically by the FCMCs, but a manual forward transfer can be initiated from the fuel panel if a failure occurs.

G7508471 - G3NT1T0 - FM28B100000003

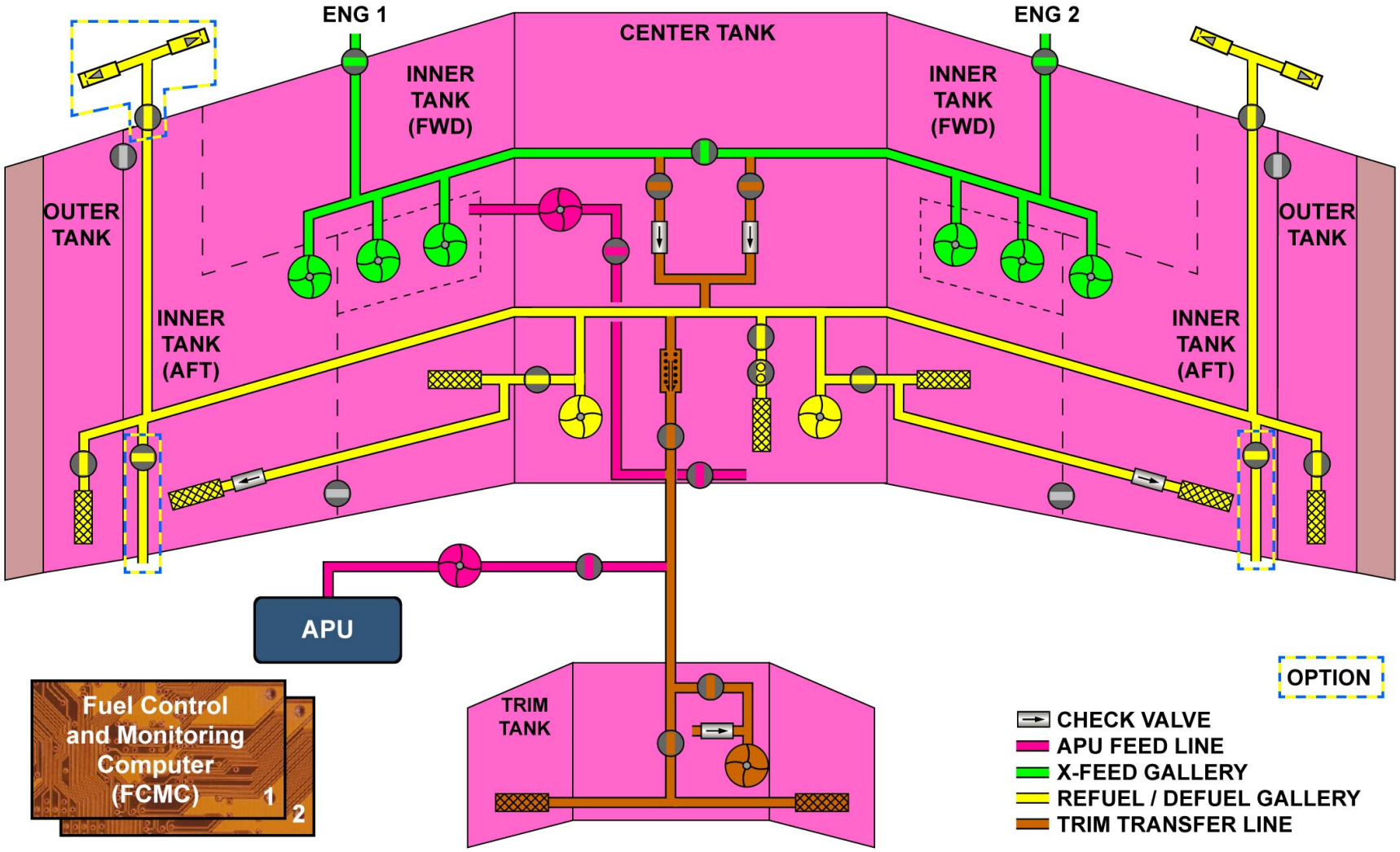

SYSTEM OVERVIEW - A330-200 OVERVIEW

G7508471 - G3NT1T0 - FM28B100000003

FUEL LINE MAINTENANCE BRIEFING (2)

SYSTEM OVERVIEW (continued)

A330-300 OVERVIEW

The fuel is stored in five tanks. In each wing, there is an outer tank, and an inner tank divided into two parts: the forward inner tank, and the aft inner tank. There is also a trim tank. Each inner tank section has one closed area called the collector cell, which is a reservoir for the booster pumps. A dedicated jet pump is only used to fill the collector cell of the main booster pumps. A vent surge tank is installed outboard of each outer tank in the wing and on the RH side of the trim tank. They vent the fuel tanks and collect fuel split from the tanks. Each tank has one or more water drain valves located at low points.

Engine Feed:

An independent fuel feed system supplies each engine. For each engine, there are two main fuel pumps, and one stand-by pump. In the normal configuration the main pumps are running and the stand-by pump is there as a back up when a main pump has a too low output pressure. A LP valve isolates its related engine from the fuel supply. The crossfeed system lets any engine be fed from any tank. It is used to correct fuel imbalance between tanks or during gravity feeding of the engines.

APU Feed:

Fuel is supplied to the APU from the LH inner tank collector cell with the forward APU pump through the trim transfer line. If a low pressure is detected in the trim transfer line, the aft APU pump starts. The APU fuel isolation valve controls the fuel flow from the FWD inner tank to the trim transfer line. If an APU fire is detected, the APU LP valve closes. The fuel/air separator, installed in the trim tank fuel transfer line, keeps sufficient fuel for APU operation if air enters the transfer line.

Main Transfer:

The main transfer system controls the fuel flow from the outer tanks to the two inner tanks for engine feeding. The FCMCs usually control automatically the transfers, but they can be manually controlled if necessary. The trim transfer system controls the A/C center of gravity by forward and aft transfers. The FCMCs automatically control trim transfers, but a manual forward transfer can be initiated from the fuel panel if a failure occurs.

G7508471 - G3NT1T0 - FM28B100000003

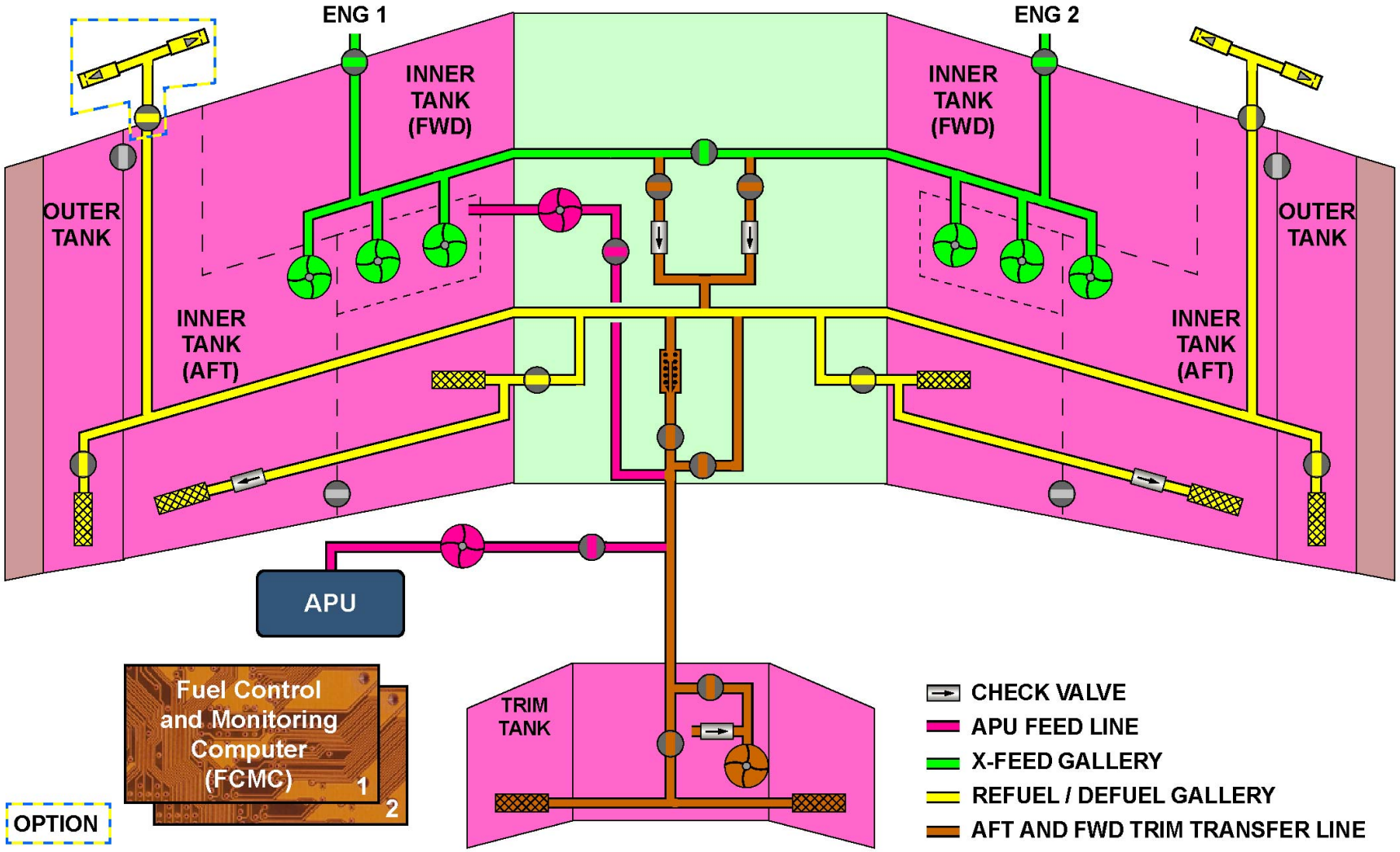

SYSTEM OVERVIEW - A330-300 OVERVIEW

G7508471 - G3NT1T0 - FM28B100000003

FUEL LINE MAINTENANCE BRIEFING (2)

SERVICING

Automatic refueling may be accomplished with normal electrical power established or with battery power only.

NOTE: On battery power only, the ADIRS does not send attitude information to the FCMS, so there could be a difference up to 750kg. between the PRESELECTED and ACTUAL fuel quantity after refueling.

Procedure:
- set parking brake,
- put chocks in position. Make sure that the chocks do not touch the tires. The additional fuel weight can cause the tires to contact the chocks,
- connect 2 or 4 hoses to the fuel couplings,
- put ADIRU 1, 2, 3 in NAV position on the overhead panel,
- open the Refuel panel access door on the lower fuselage,
- if necessary, set the PoWeR SUPPLY to BATtery,
- do the hi level test - hi-level & overflow lights change condition, CocKPiT & END lights come on, fuel quantity, preselected & actual displays show all 8's,
- operate the load switch to INC to set the preselected value to the total fuel quantity required,
- check refuel valve switches are in norm and guarded position,
- set the mode select switch to REFUEL - make sure that the fuel quantity and ACTUAL values increase,
- the end light comes on steady when refueling is complete - The actual and preselected values agree within ± 200 kg.

G7508471 - G3NT1T0 - FM28B100000003

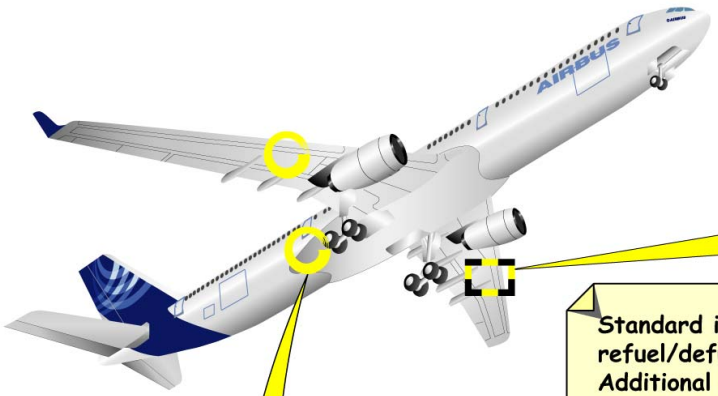

Standard installation is refuel/defuel coupling on right wing. Additional coupling on left wing is optional on A330-300 only.

REFUEL COUPLING

As an option, the refuel/defuel panel may be located at the wing leading edge.

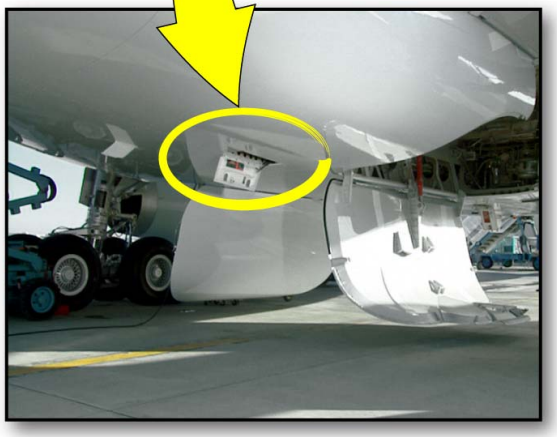

OPTIONAL REFUEL PANEL LOCATION

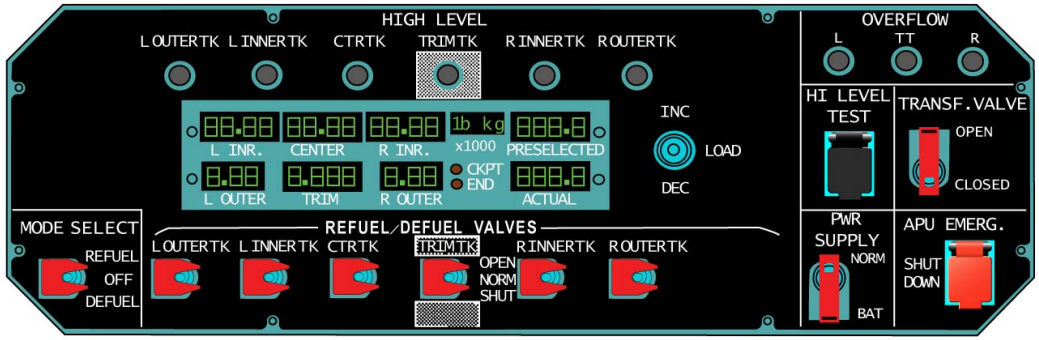

REFUEL/DEFUEL PANEL (990VU)

SERVICING

FUEL LINE MAINTENANCE BRIEFING (2)

DAILY CHECKS

Years of operational experience have shown that regular draining of the fuel tank water content will prevent many fuel system problems. The Maintenance Planning Document (MPD) recommends that operators do this procedure every 7 days or less.

DRAIN WATER CONTENT

The water drain valves are installed in the center tank, in the wing, and in trim tanks. All drains should be operated to carry out proper water removal from the fuel. There are 2 drains in the center tank, 7 in each wing, and 3 in the trim tank.
If possible, the best time to drain the water from the tanks is prior to the refueling. If that is not possible, wait one hour after refueling for the fuel to stabilize. The center tank drain valves are found in an access panel on either side of the fuselage. The wing drain valves are accessible from the underside of the wing. For gravity purging, the center and wing tanks need > 10% tank content and the trim tank needs at least 1,000 kg (2200 lb). The THS should also be moved to 0° trim. To operate the drain valves, use the PURGER tool and push up on the valve. Make sure to drain at least one liter of fuel for proper water removal. When draining is complete, remove the PURGER tool and make sure that there is no leakage at the drain valve. If the drain valve leaks, set correctly the valve by pushing up and releasing the drain valve again.

ENVIRONMENTAL PRECAUTIONS

Do not discharge products such as oil, fuel, solvent, lubricant either in trash bins, soil or into the water network (drains, gutters, rain water, waste water, etc...).
Sort waste fluids and use specific waste disposal containers.
Each product must be stored in an appropriate and specific cabinet or room such as a fire-resistant and sealed cupboard.

This is the water drain valve operation video.

G7508471 - G3NT1T0 - FM28B100000003

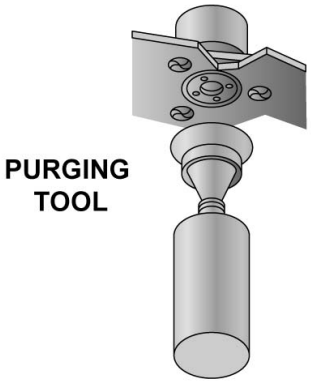

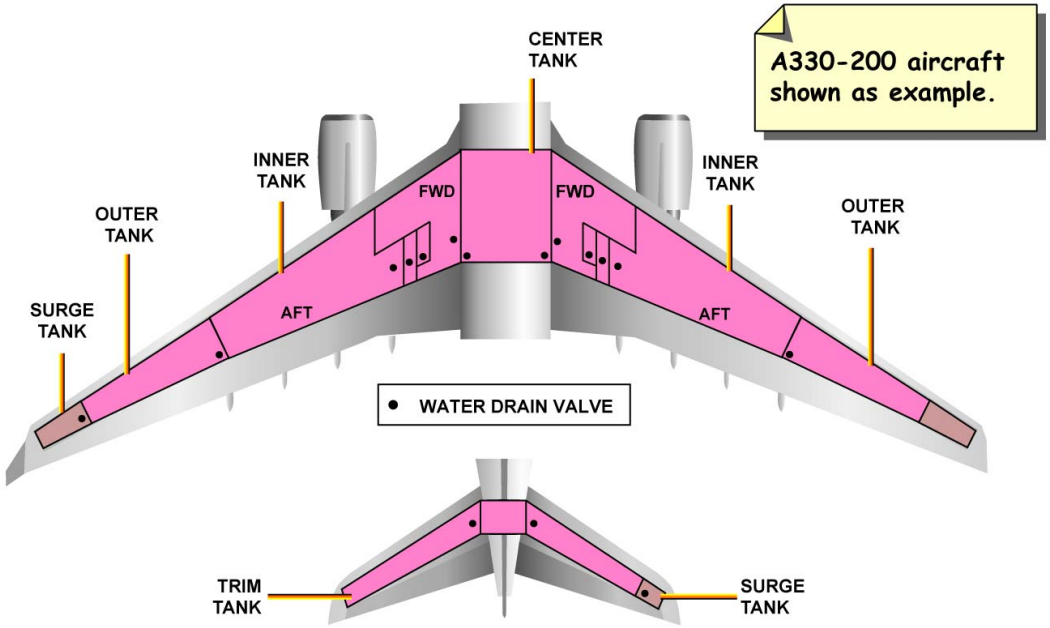

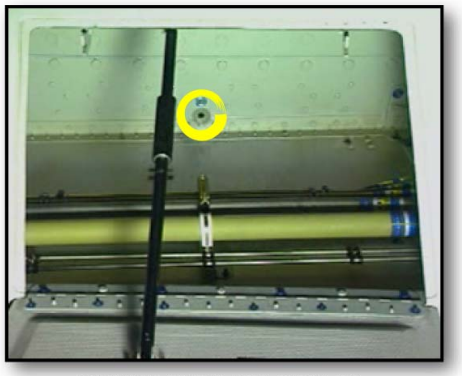

CENTER TANK DRAIN VALVE ACCESS

TYPICAL WING WATER DRAIN VALVE

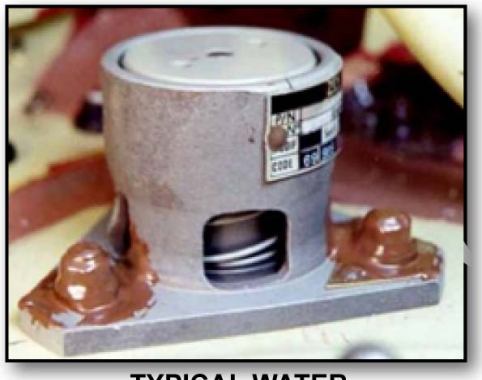

TYPICAL WATER DRAIN VALVE

DAILY CHECKS - DRAIN WATER CONTENT & ENVIRONMENTAL PRECAUTIONS

FUEL LINE MAINTENANCE BRIEFING (2)

MEL/DEACTIVATION

CROSSFEED VALVE FAILURE

In case of a crossfeed valve failure, and if we are not in Extended Range operations the aircraft may be dispatched referring to the MEL with valve inoperative in the CLOSED position. In addition, the inner and outer tank inlet valves, all fuel quantity indications and both center tank transfer pumps (A330-200) must be operational. The cross feed valve is deactivated by removing the actuator and installing a locking tool.

WARNING: Obey all safety procedures related to flight controls, landing gear and the fuel system when following this procedure

Procedure:
- on the ECAM FUEL page, check that the crossfeed valve is in the green/crossline position (closed),
- open XFEED VaLVe MOTor C/B's,
- do an operational test of the outer and inner tank inlet valves from the MCDU/FCMC Fuel Valves Test menu,
- (A330-200 only) do an operational test of the center tank transfer pumps. Transfer fuel from the center tank using each pump independently,
- at the applicable valve, check the OPEN/CLOSED indicator and remove the actuator,
- if the valve was open, use an applicable tool to fully close the valve,
- install DUMMY plug and receptacle on the connectors removed from the actuator,
- align dowel and install the valve locking tool. Secure with the v-band clamp.

CROSSFEED VALVE

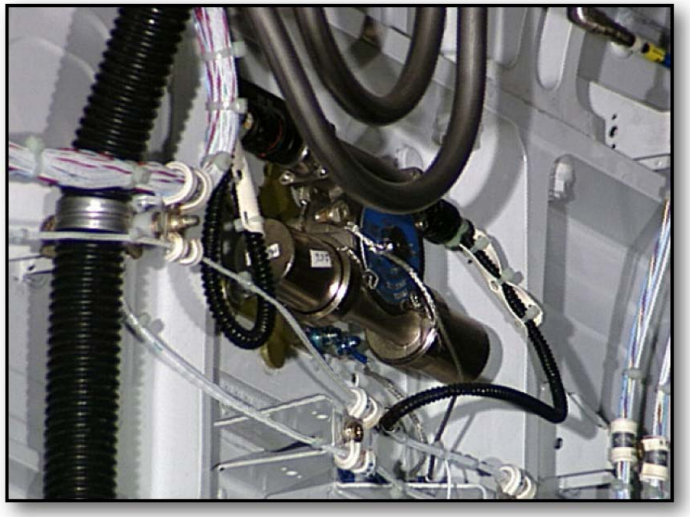

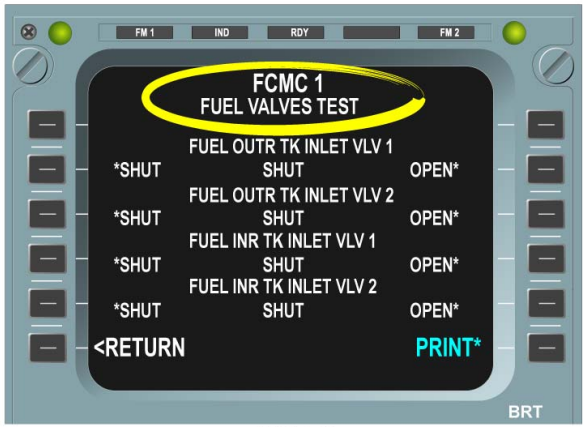

MCDU

VALVE LOCKING TOOL

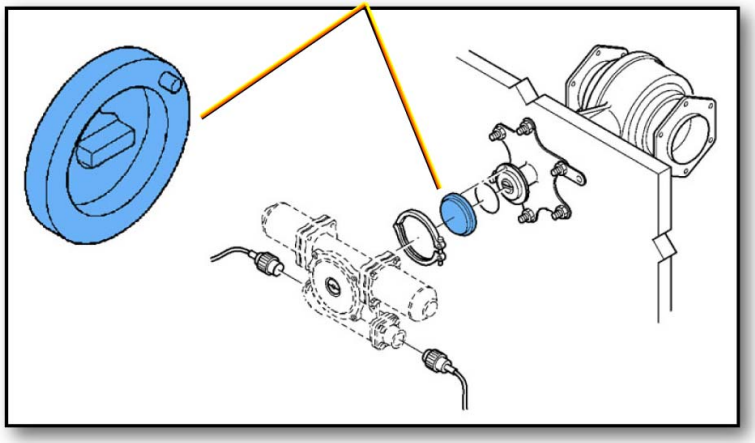

	28-23 CROSSFEED SYSTEM					
R R R R R R R R R R R	23-01 Crossfeed Valve	B	1	0	*(o)(m)	Except for ER operations, may be inoperative in closed position provided: 1) Both outer tank inlet valves are operative, and 2) Both inner tank inlet valves are operative, and 3) All fuel quantity indications are operative on ECAM FUEL page, and 4) Both center tank transfer pumps are operative when there is fuel in center tank.

MEL

MEL/DEACTIVATION - CROSSFEED VALVE FAILURE

G7508471 - G3NT1T0 - FM28B100000003

FUEL LINE MAINTENANCE BRIEFING (2)

MEL/DEACTIVATION (continued)

REFUEL ISOLATION VALVE FAILURE

During refueling, the refuel isolation valve solenoid is energized and fuel pressure from the tanker/pump unit opens the valve. If the solenoid fails or if the electrical control of the solenoid fails, the valve may be operated by a manual plunger. To refuel the aircraft, PUSH and HOLD the plunger on the valve. The fuel pressure from the tanker/pump unit will open the valve. Be sure to monitor the fuel quantity carefully using the normal indication system. When the desired quantity is reached, release the plunger to close the valve.

G7508471 - G3NT1T0 - FM28B100000003

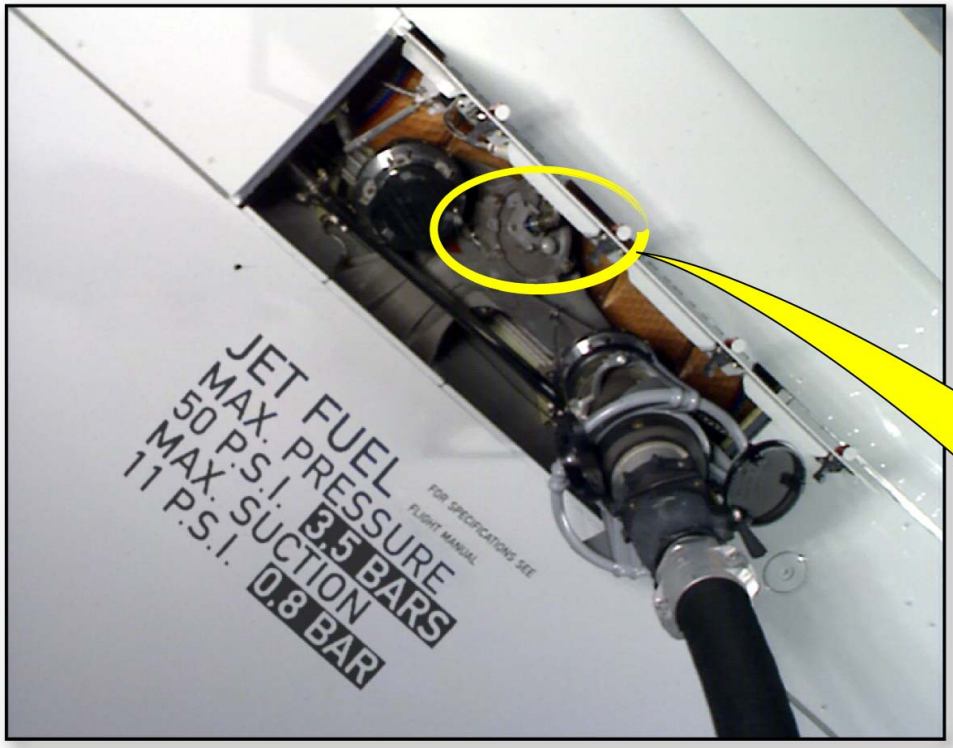

REFUEL COUPLING

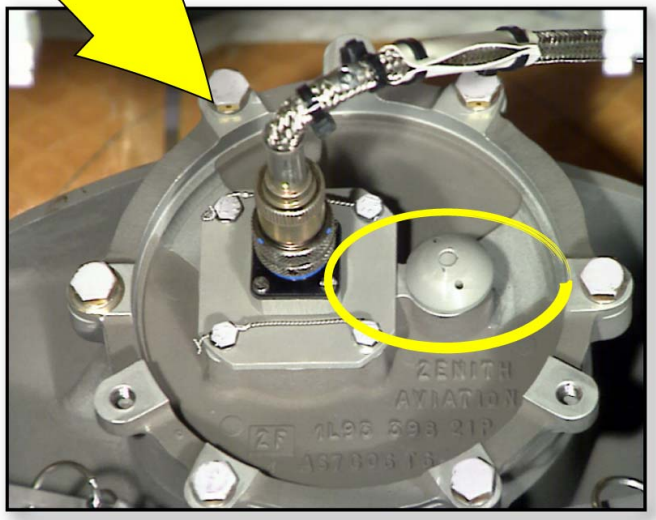

REFUEL ISOLATION VALVE

MEL/DEACTIVATION - REFUEL ISOLATION VALVE FAILURE

G7508471 - G3NT1T0 - FM28B100000003

FUEL LINE MAINTENANCE BRIEFING (2)

MEL/DEACTIVATION (continued)

FUEL QUANTITY INDICATION FAILURE

The aircraft may be dispatched with unserviceable fuel quantity indications. One OUTER, one INNER, or the CENTER tank quantity indication may be inop as per the MEL. The TRIM tank indication may be inop as long as there is no fuel in the TRIM tank.

NOTE: An indication with dashes on the two last digits is considered operative. The loss of accuracy must be taken into account for fuel planning.

The conditions for dispatch with an OUTER quantity inop are:
- after refueling, check fuel quantity in the related tank using the manual MLIs,
- the FUEL used indication must be operational,
- adjacent INNER tank fuel quantity is operational,
- low Level sensing system test OK (check on MCDU/FCMC menu).

The conditions for dispatch with an INNER quantity inop are:
- after refueling, check fuel quantity in the related tank using the manual MLIs,
- the FUEL used indication must be operational,
- left and right INTERTANK valves are closed (check on MCDU/FCMC menu),
- low Level sensing system test OK (check on MCDU/FCMC menu).

The conditions for dispatch with a CENTER quantity inop are:
- after refueling, check fuel quantity in the related tank using the manual MLIs,
- the FUEL used indication must be operational,
- all INNER and OUTER tank fuel quantities are operational.

G7508471 - G3NT1T0 - FM28B100000003

A330-300 RIGHT INNER "DASHED" (SERVICEABLE)

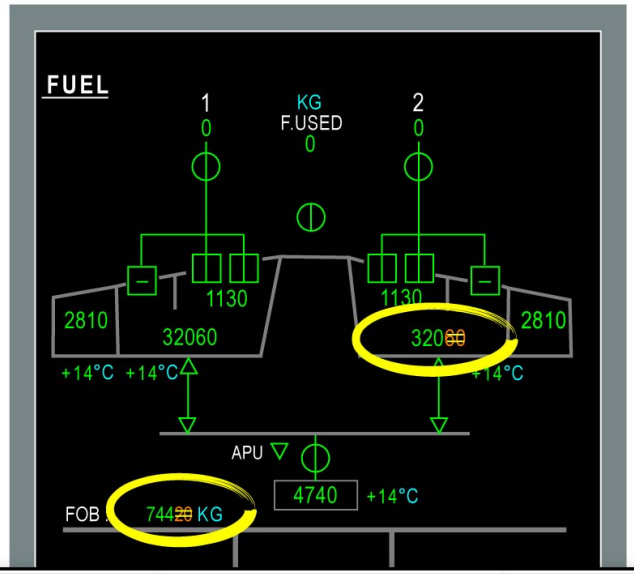

	MASTER MINIMUM EQUIPMENT LIST	01-28	P 18
	FUEL	SEQ 001	REV 17

1. SYSTEM AND SEQUENCE NUMBERS / ITEM	2. RECTIFICATION INTERVAL	3. NUMBER INSTALLED	4. NUMBER REQUIRED FOR DISPATCH	5. REMARKS OR EXCEPTIONS
28-42 QUANTITY INDICATING 42-01 Indication on ECAM FUEL Page				*NOTE* *An indication with dashes on the two last digits is considered operative. The loss of accuracy must be taken into account for the fuel planning (see associated operational procedure in section 02).*

A330-200 CENTER TANK INDICATION INOP

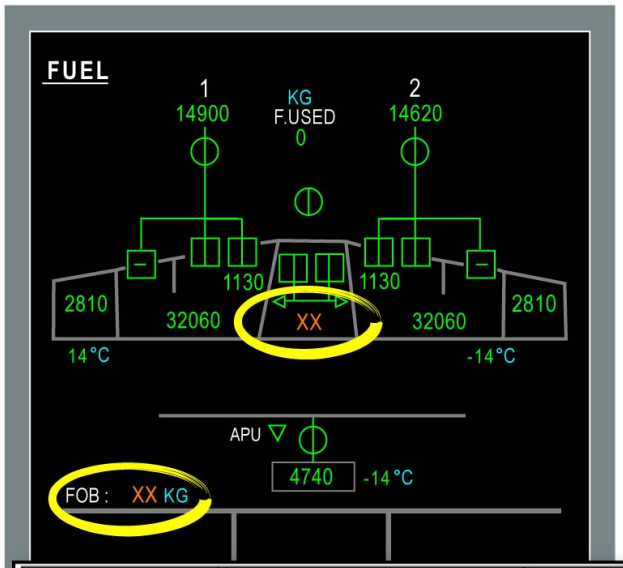

	MASTER MINIMUM EQUIPMENT LIST	01-28	P 19
	FUEL	SEQ 001	REV 17

1. SYSTEM AND SEQUENCE NUMBERS / ITEM	2. RECTIFICATION INTERVAL	3. NUMBER INSTALLED	4. NUMBER REQUIRED FOR DISPATCH	5. REMARKS OR EXCEPTIONS
C) Center	C	1	0	*(o)(m) May be inoperative provided : 1) Fuel quantity is checked after each refueling by manual magnetic indicators, and 2) All wing tanks fuel quantity indications are operative on ECAM FUEL page, and 3) All F. USED indications are operative on ECAM FUEL page, and 4) Manual forward transfer from trim tank to center tank is carried out as soon as possible after takeoff when positive pitch angle is less than 3 degrees.

MEL/DEACTIVATION - FUEL QUANTITY INDICATION FAILURE

G7508471 - G3NT1T0 - FM28B100000003

FUEL LINE MAINTENANCE BRIEFING (2)

MEL/DEACTIVATION (continued)

USE OF MAGNETIC LEVEL INDICATORS (MLIs)

Each fuel tank has one or more MLIs. In case of an indication malfunction, the MLIs may be used to check fuel quantity. There is one MLI in the CenTeR tank (A330-200 only), 4 in each INNER tank and 2 in each OUTER tank.
The aircraft attitude will determine which fuel table to use. The Air Data Inertial Reference Unit (ADIRU) will be used to find the aircraft attitude. The air data inputs to the ADIRU can be read by using the alpha call-up function in the Aircraft Condition Monitoring System (ACMS). With the ADIRU's in the NAV position, select the ACMS menu in the Central Maintenance System (CMS). From this menu, select CALL UP PARAM ALPHA. Type ROLL to access roll data and type PTCH to access pitch data.
To use the MLI, extend the indicator rod and read the UNITS mark nearest the bottom surface of the wing. Each tank is separately checked. To determine wing volume, use the most outboard MLI, which indicates fuel in the tank. To check the total fuel quantity on the aircraft determine the total in each tank (CTR, INNER, OUTER) and add them together.

NOTE: A small correction for the COLLECTOR cells may be applied to the INNER tank volume based on the time since the boost pumps were shut off.

Using the attitude reference + MLI number + MLI reading, find the correct fuel table in the AMM and read the fuel volume. The MLI No identifies the tables. Make sure to identify LEFT or RIGHT MLI on the table to avoid miscalculations. The final step is to convert the volume to weight. Multiply the volume by the fuel specific gravity.

NOTE: The fuel specific gravity reading may be from a fuel sample or from the FCMS INPUT PARAMETERS (MCDU/FCMC menu)

For example:
RIGHT wing MLI number - 6
Attitude: P= -1,0, R= 0,5
UNITS reading - 10
Volume in liters - 720
Sp. Gravity - 0.81
Fuel weight = 583 Kg.

NOTE: Only even-numbered MLI units are listed in the tables. To calculate the volume of fuel for odd numbers, interpolate (divide the difference) between the nearest even numbers in the table.

G7508471 - G3NT1T0 - FM28B100000003

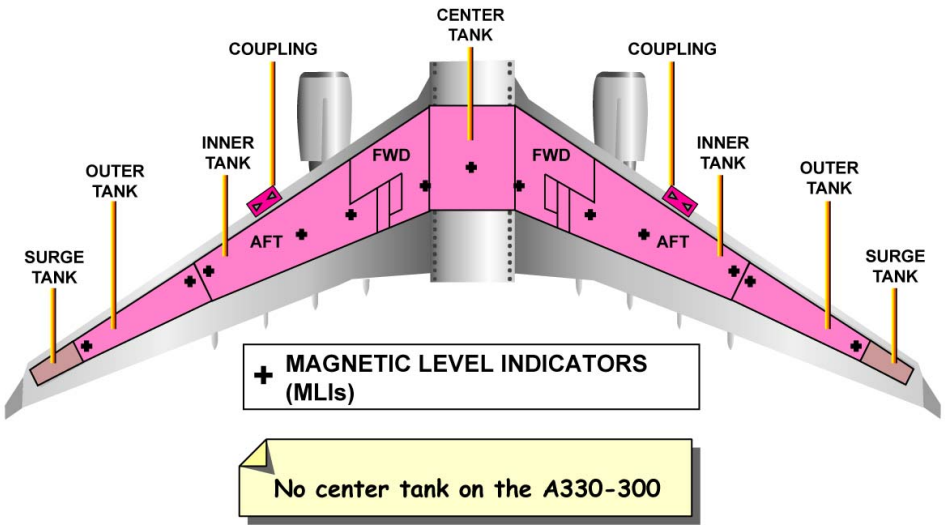

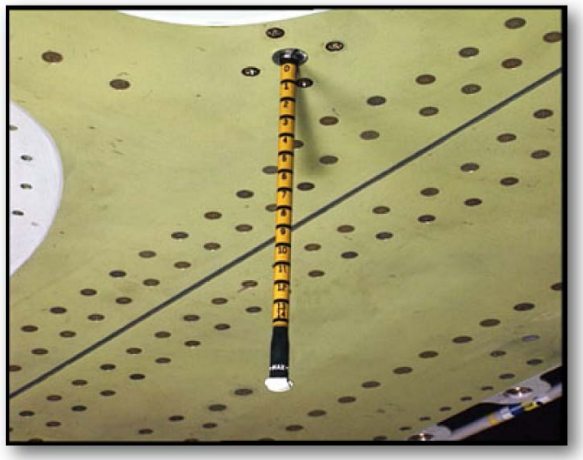

MLI EXTENDED

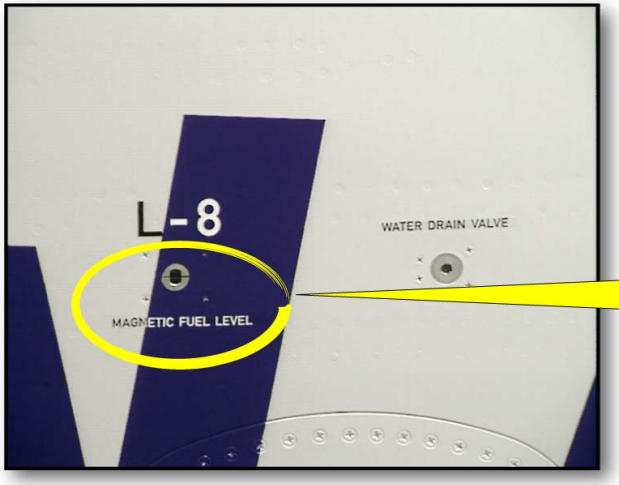

MLI RETRACTED AND LOCKED

MEL/DEACTIVATION - USE OF MAGNETIC LEVEL INDICATORS (MLIS)

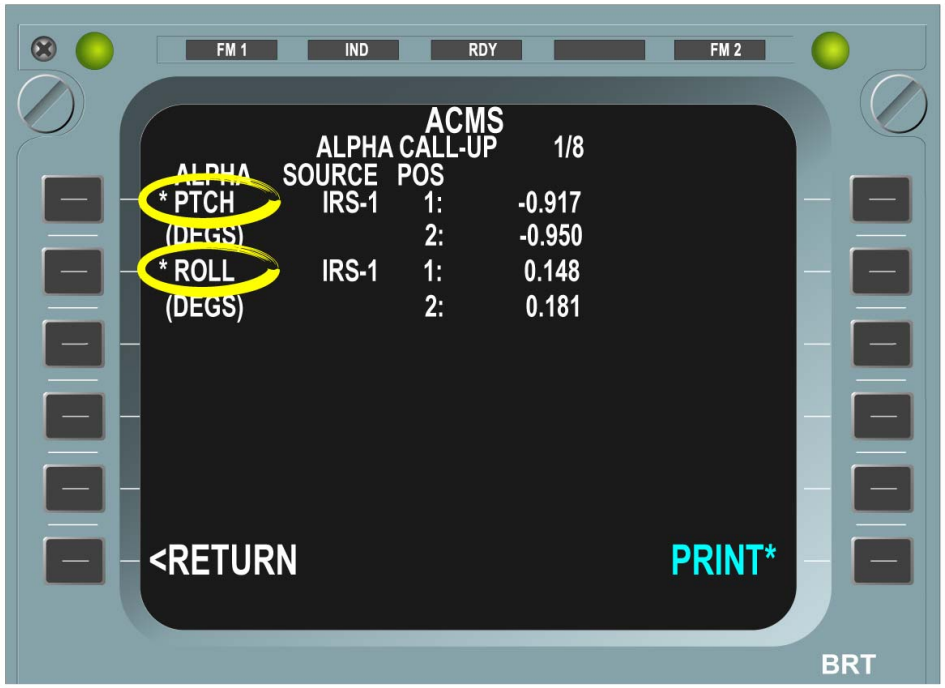

AIRCRAFT ATTITUDE

MEL/DEACTIVATION - USE OF MAGNETIC LEVEL INDICATORS (MLIS)

MLI No. 6

ADIRS P	ADIRS R	STICK HEIGHT 0	2	4	6	8	10	12	14	16	18
		LITERS									
-2.5	-1.5	290	370	450	550	660	770	900	1030	1180	1330
-2.5	-1.0	290	370	450	540	640	750	870	990	1120	1270
-2.5	-0.5	300	370	450	540	630	740	840	960	1090	1220
-2.5	0.0	310	390	460	540	630	730	830	940	1060	1180
-2.5	0.5	320	390	460	540	630	720	820	930	1040	1150
-2.5	1.0	330	400	470	550	630	720	810	920	1020	1130
-2.5	1.5	340	410	480	550	630	720	810	910	1010	1120
-2.0	1.5	330	400	470	550	630	720	810	910	1010	1120
-2.0	1.0	320	390	460	540	630	720	810	920	1030	1140
-2.0	0.5	310	390	460	540	630	720	820	930	1040	1160
-2.0	0.0	300	370	450	540	630	730	830	950	1070	1200
-2.0	-0.5	290	370	450	540	630	740	850	970	1100	1240
-2.0	-1.0	290	360	450	540	640	760	880	1010	1150	1290
-2.0	-1.5	280	360	450	550	660	780	910	1050	1210	1370
-1.5	-1.5	270	350	450	550	670	800	930	1080	1240	1410
-1.5	-1.0	280	360	440	540	650	780	890	1030	1170	1320
-1.5	-0.5	290	360	440	530	630	740	860	980	1120	1260
-1.5	0.0	290	370	450	530	630	730	840	960	1080	1210
-1.5	0.5	300	370	450	530	620	720	820	930	1050	1180
-1.5	1.0	310	380	460	540	620	720	820	920	1030	1150
-1.5	1.5	320	390	460	540	630	710	810	910	1020	1130
-1.0	1.5	320	380	460	540	620	710	810	910	1020	1140
-1.0	1.0	310	370	450	530	620	[illegible]	820	920	1040	1160
-1.0	0.5	300	370	440	530	620	720	830	940	1060	1180
-1.0	0.0	290	360	440	530	630	[illegible]	840	970	1100	1230
-1.0	-0.5	280	350	440	530	640	750	870	1000	1140	1290
-1.0	-1.0	270	350	440	540	650	770	910	1050	1200	1360
-1.0	-1.5	260	350	450	550	660	810	960	1120	1290	1470
-0.5	-1.5	260	350	450	560	690	840	990	1160	1340	1530
-0.5	-1.0	260	350	440	540	660	790	930	1080	1240	1410
-0.5	-0.5	270	350	440	530	640	760	880	1020	1170	1320
-0.5	0.0	280	350	440	530	630	740	850	980	1110	1260
-0.5	0.5	290	360	440	530	620	720	830	950	1080	1210
-0.5	1.0	300	370	450	530	620	720	820	930	1050	1170
-0.5	1.5	310	380	450	530	620	710	810	920	1030	1150
0.0	1.5	300	370	450	530	620	710	810	920	1040	1160
0.0	1.0	290	360	440	530	620	720	820	940	1060	1190
0.0	0.5	280	350	440	530	620	730	840	960	1090	1230
0.0	0.0	270	350	430	530	630	740	860	1000	1140	1290
0.0	-0.5	260	340	430	530	640	770	900	1040	1200	1360
0.0	-1.0	260	340	440	550	670	810	950	1110	1280	1460
0.0	-1.5	250	340	450	570	710	870	1040	1220	1410	1610
0.5	-1.5	250	350	460	590	740	910	1090	1280	1490	1690
0.5	-1.0	250	340	440	560	690	830	990	1160	1340	1530
0.5	-0.5	260	340	430	540	650	780	920	1070	1240	1410
0.5	0.0	270	340	430	530	630	750	880	1020	1180	1320
0.5	0.5	270	350	430	520	620	730	850	980	1110	1250
0.5	1.0	280	360	440	520	620	720	830	950	1070	1210
0.5	1.5	300	370	440	530	620	710	820	930	1050	1170

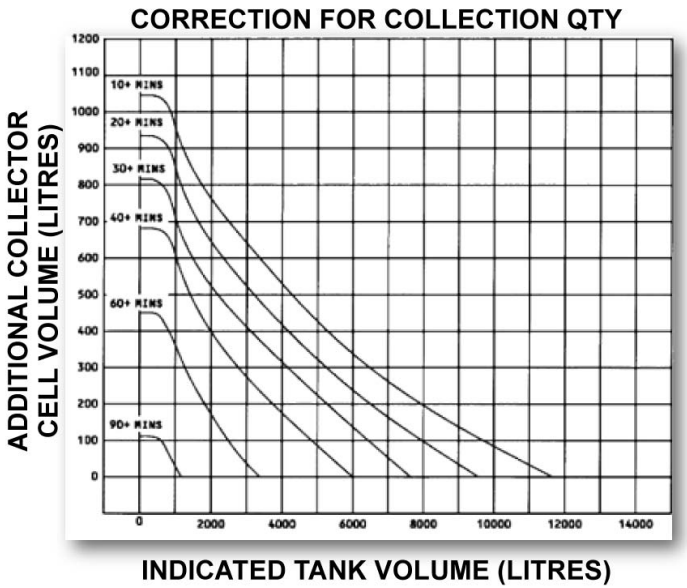

Each curve shows the collector cell volume at specific times after the pumps have been switched off.

MEL/DEACTIVATION - USE OF MAGNETIC LEVEL INDICATORS (MLIS)

FUEL LINE MAINTENANCE BRIEFING (2)

MAINTENANCE TIPS

During a walk-around inspection, it is important to check the surge tank burst disc on the wing lower surface. A white cross should be visible on a black background. If it is not visible, it may indicate a problem with the tank venting system.
During refueling operations, connect a bonding cable between the fuel tanker and a grounding point on the aircraft, typically on the nose or main gear. Connect a grounding cable from a grounding point on the aircraft to the ground.
In case of refueling process abort, information regarding system status can be retrieved via the MCDU in the FCMC REFUEL PARAMETERS menu.

G7508471 - G3NT1T0 - FM28B100000003

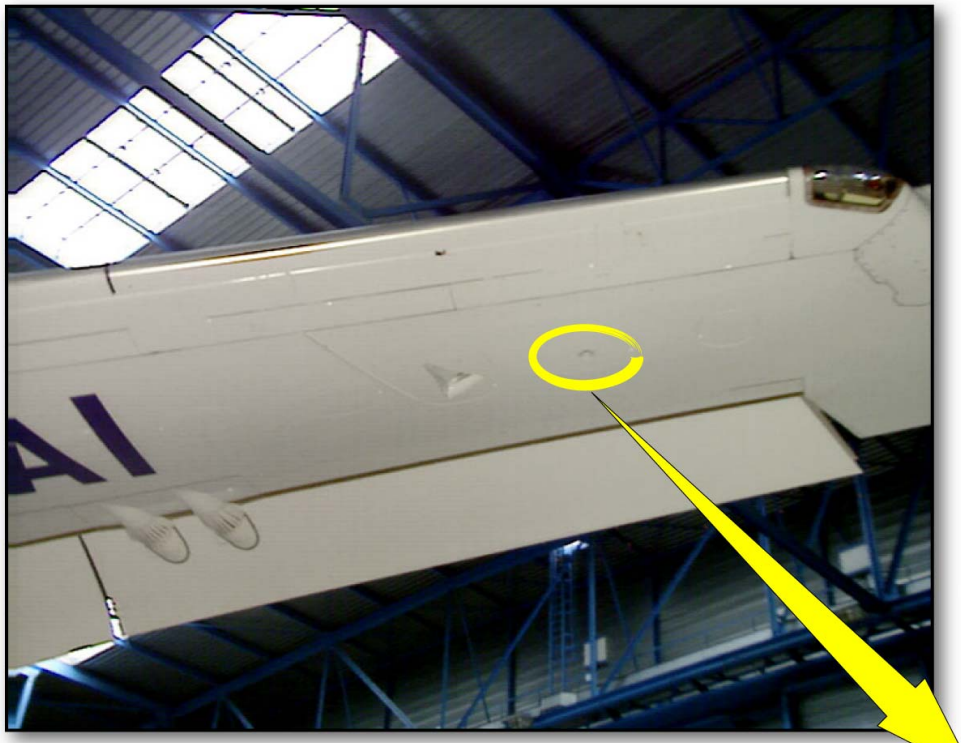

LEFT WING

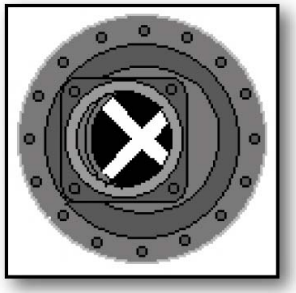

WHITE CROSS ON DISC

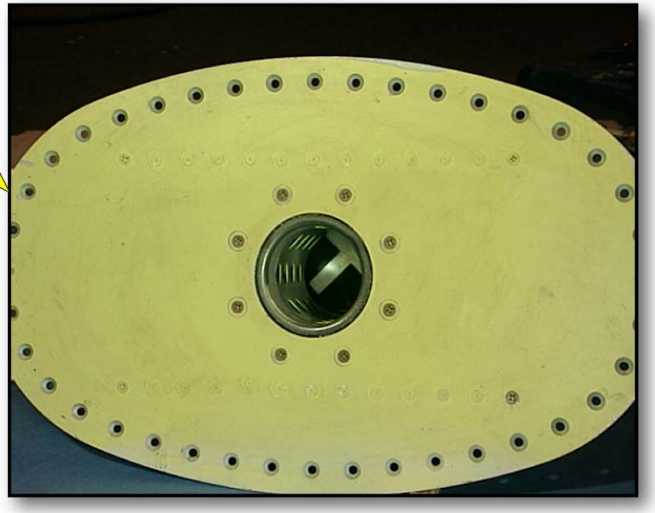

PAINTED CROSS ON DISC

MAINTENANCE TIPS

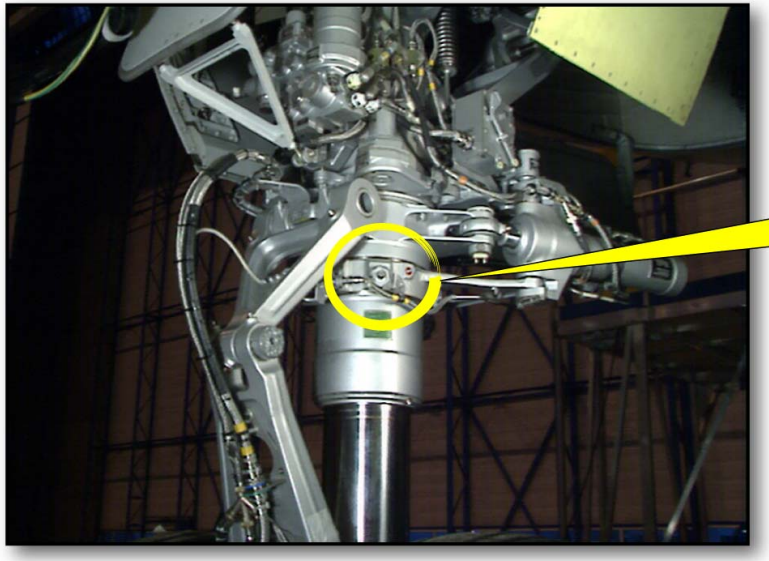

NLG

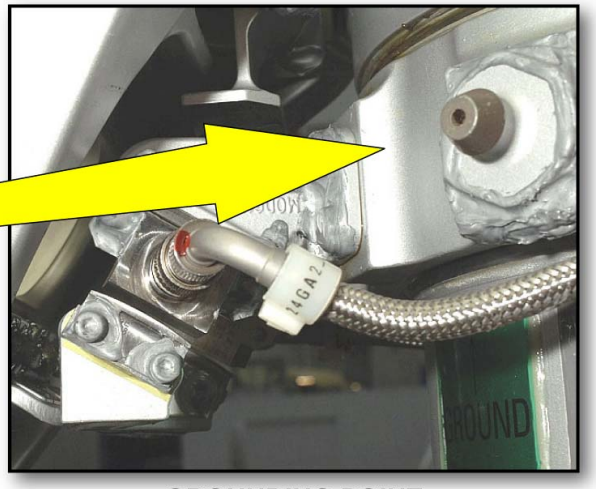

GROUNDING POINT

MLG GROUNDING POINT

MAINTENANCE TIPS

G7508471 - G3NT1T0 - FM28B100000003

REFUEL COUPLING

REFUEL/DEFUEL PANEL

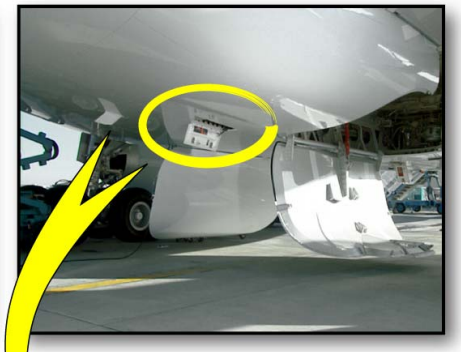

(EWD)

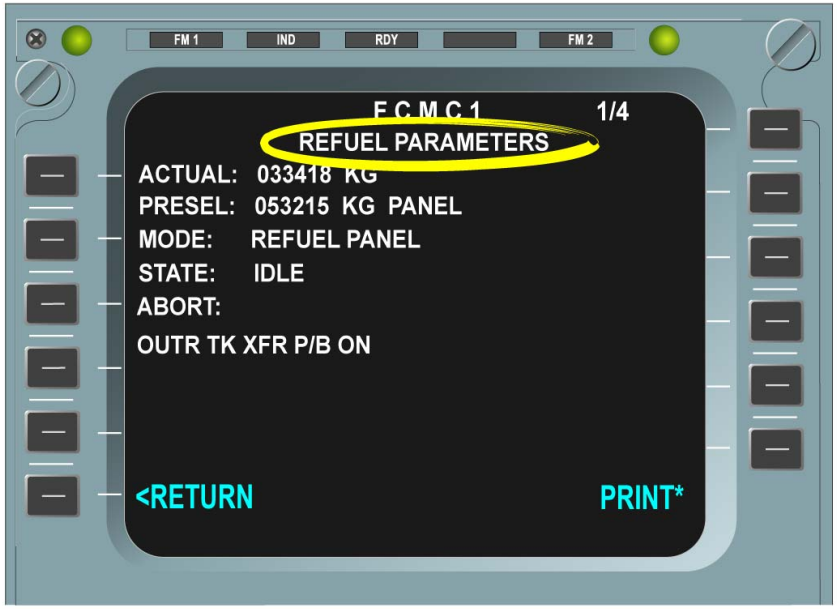

MCDU

MAINTENANCE TIPS

FUEL TANK D/O (3)

GENERAL

Each fuel tank is a part of the A/C structure. The inside of each tank is coated with a paint that contains leachable chromate. This chromate helps to prevent microbiological contamination of the fuel tanks. All the materials used to seal the tanks are fully resistant to all fuels and fuel additives.

G7508471 - G3NT1T0 - FM28D1000000003

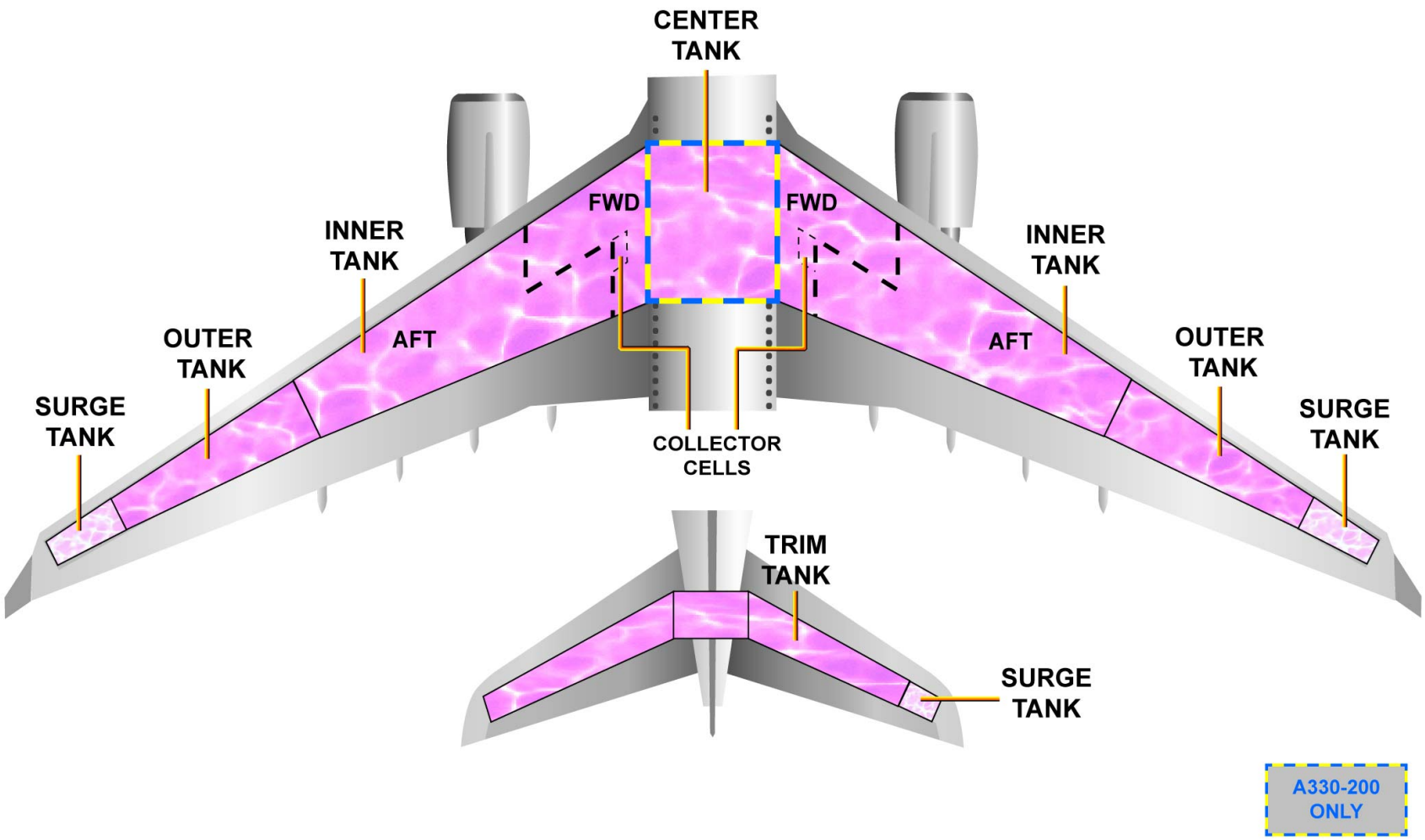

GENERAL

G7508471 - G3NT1T0 - FM28D1000000003

FUEL TANK D/O (3)

TANKS

The fuel is stored in six tanks:
- a center tank (only on the A330-200),
- in each wing: an inner tank divided into two parts, (the FWD inner tank, the aft inner tank) and an outer tank,
- a trim tank.

Vent surge tanks are installed outboard of each outer tank in the wing and on the RH side of the trim tank.

TANKS

The fuel tanks and surge tanks are located as follows:
- the center tank is between the LH rib 1 and the RH rib 1 (only on the A330-200),
- the inner tank is between rib 1 and rib 23,
- the LH (RH) outer tank is between rib 23 and rib 33,
- the LH (RH) surge tank is between rib 33 and rib 39.

The trim tank is made from carbon fiber composite material in the THS main box structure between rib 20 (LH) (19 for the A330-200) and rib 18 (RH). The THS surge tank is at the RH side of the THS between rib 18 and rib 20 (RH).
Access to the tanks is gained through manhole panels.

COLLECTOR CELLS

Each inner tank contains a fuel collector cell which is built between ribs, the center spar and sealed diaphragms FWD of the rear spar. The bottom of ribs 2 is equipped with three flap-type check valves. They let fuel flow into each collector cell and prevent it from flowing out. The top of the collector cell is equipped with openings which let fuel fall back into the inner tanks.

WATER DRAIN VALVES

Each tank has one or more water drain valves. The drain valves are used to:
- drain the water which could possibly come out of the fuel in the tank,
- drain all the remaining fuel out of a tank (for maintenance).

G7508471 - G3NT1T0 - FM28D100000003

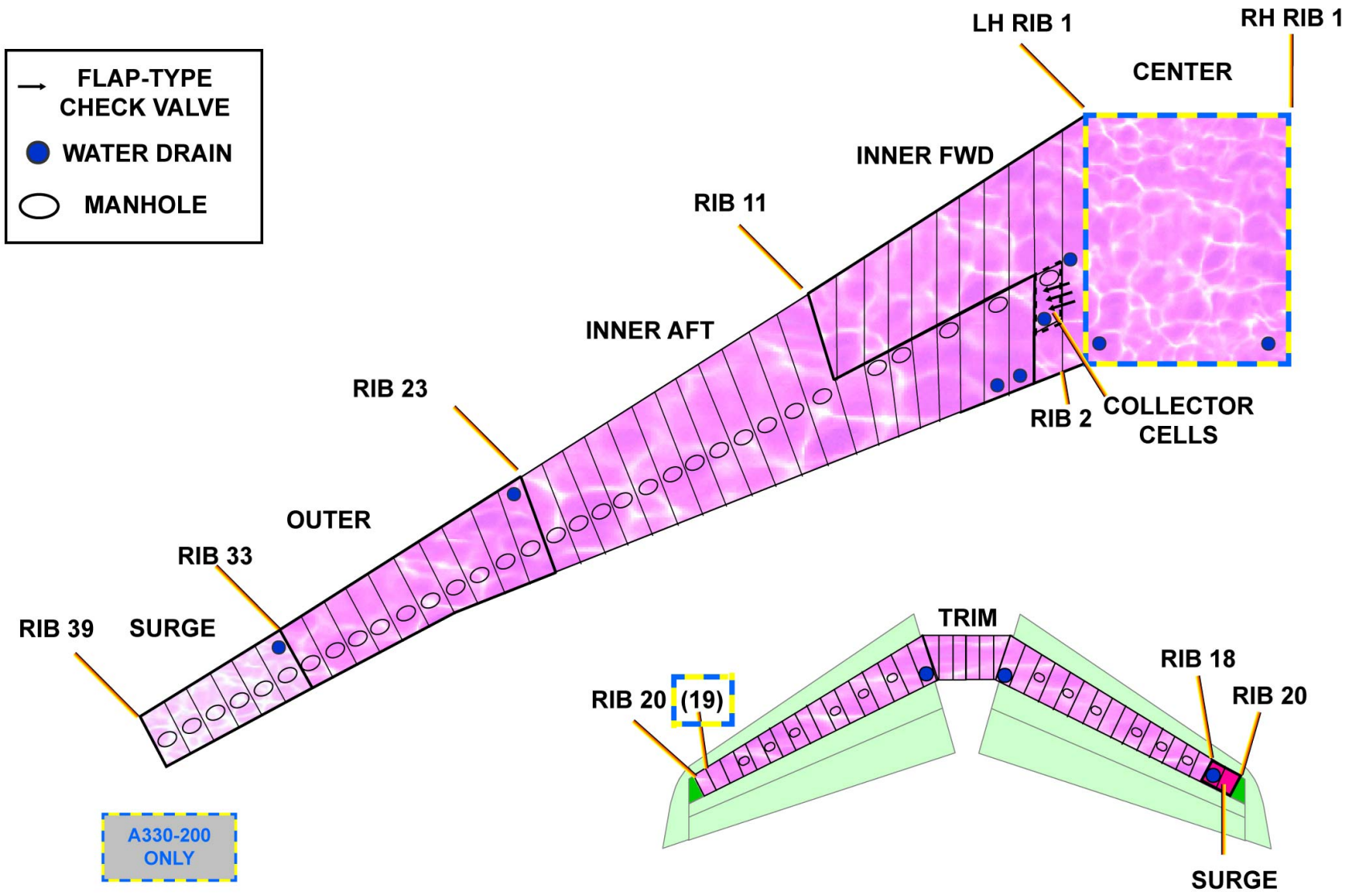

TANKS - TANKS ... WATER DRAIN VALVES

G7508471 - G3NT1T0 - FM28D100000003

FUEL TANK D/O (3)

TANKS (continued)

EMERGENCY ISOLATION VALVES

The valves are installed between the AFT and FWD inner tanks.
During normal operation the emergency isolation valves are open.
The crew has to close the split valves to isolate a fuel leak.
An action on the L or R INR TK SPLIT P/BSWs on the FUEL control panel enables manual control of the emergency isolation valves. The fuel is transferred by gravity. When you press one of the INR TK SPLIT P/BSWs, the valves will close ("ON" legend comes on the P/B) and when they are confirmed closed, the "SHUT" legend comes on the P/B.

G7508471 - G3NT1T0 - FM28D100000003

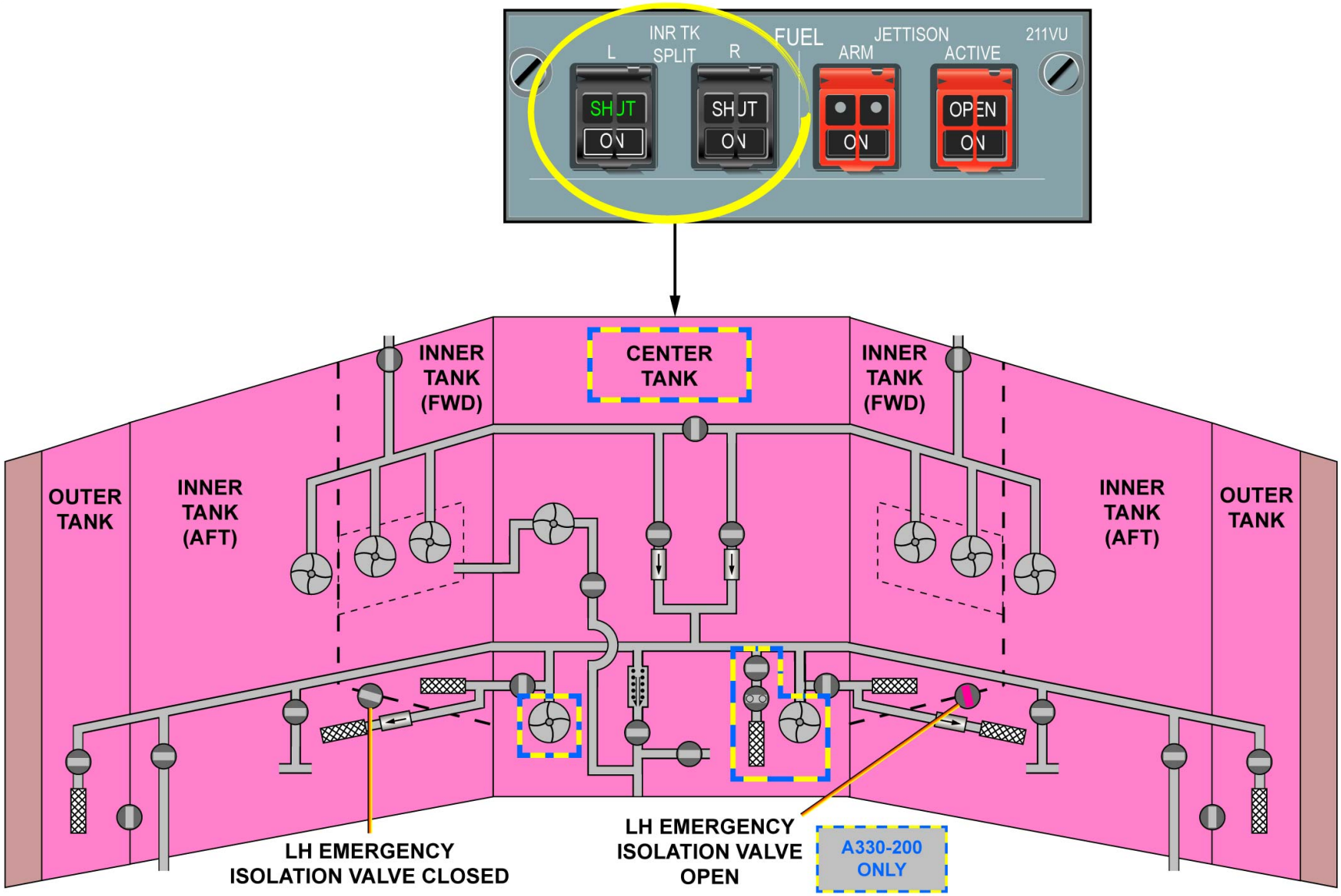

TANKS - EMERGENCY ISOLATION VALVES

G7508471 - G3NT1T0 - FM28D100000003

FUEL TANK D/O (3)

TANKS (continued)

TRIM PIPE SHROUD

The trim fuel pipe has an outer shroud. If the trim pipe has a fuel leak, the shroud contains the fuel leakage. The shroud has a fluid drain at its lowest point (FR 47). This drain is a small diameter pipe that connects the shroud to a drain mast. The drain mast is installed on the lower fuselage at FR 53.4.

G7508471 - G3NT1T0 - FM28D100000003

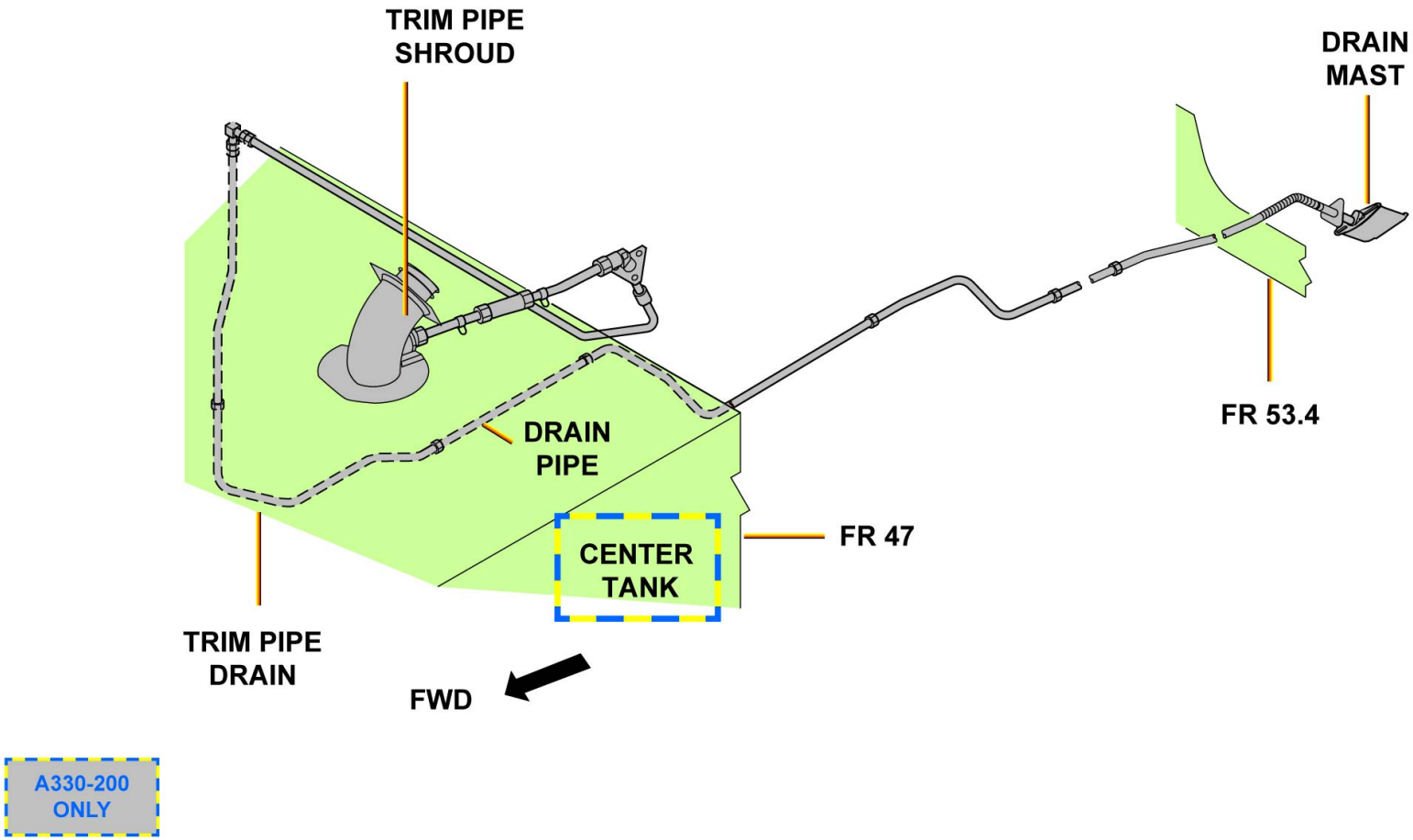

TANKS - TRIM PIPE SHROUD

G7508471 - G3NT1T0 - FM28D1000000003

FUEL TANK VENTING D/O (3)

GENERAL

The tank venting system keeps the air pressure in the fuel tanks near the external air pressure. This function prevents a large difference between these pressures, which could cause damage to the fuel tank structure. This function is particularly necessary during the refuel or defuel operations and when the A/C climbs or descends. Each vent surge tank keeps its related fuel tanks open to the ambient air pressure. The operation of the tank venting system is fully automatic. There are no manual controls. The tank venting system is divided into two systems. These are:
- the wing and center tanks venting system,
- the trim tank venting system.

G7508471 - G3NT1T0 - FM28D200000003

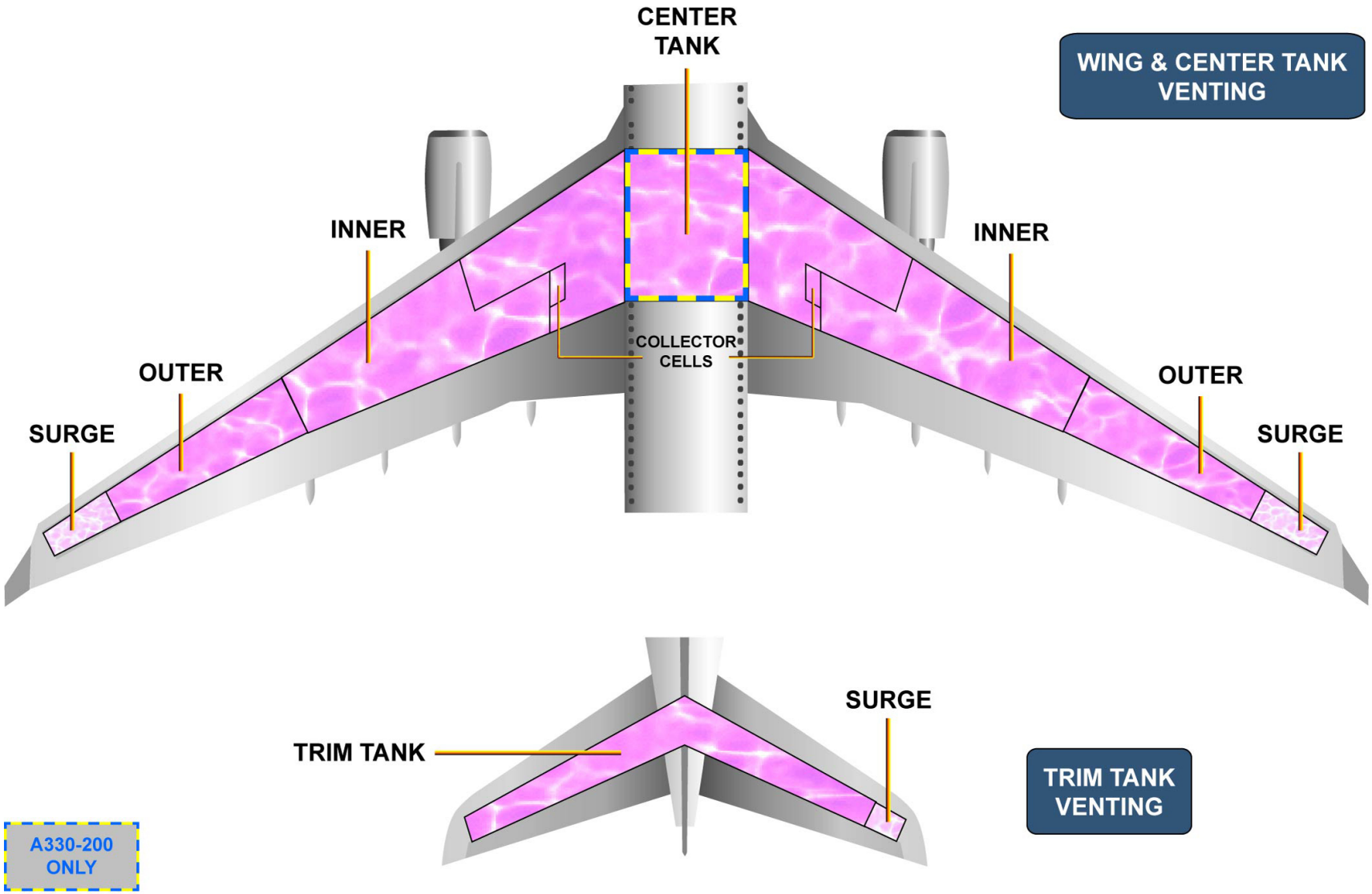

GENERAL

G7508471 - G3NT1T0 - FM28D200000003

FUEL TANK VENTING D/O (3)

VENTING

Let's see in details the venting system.

WING & CENTER TANKS VENTING

For the A330-200 A/C, the center tank vent pipe has an open-end fitting at each end. The pipe connects the middle of the center tank to the LH surge tank at rib 33.
The LH (RH) inner tank vent pipe connects the inboard end of the tank to the surge tank. The pipe has two open-end fittings at its inboard end. A weir duct is installed between rib 22 and rib 23. The weir duct makes sure that the fuel does not go to the vent valve during a refuel operation.
The outer tank vent pipe connects the open-end fitting, inboard of rib 33 to the inner tank vent pipe, between the weir duct and rib 22.
The surge tank has a drain pipe which connects the bottom of the surge tank, at rib 33, to the inner tank vent pipe, outboard of rib 29.
The bottom of each vent pipe includes a breather assembly at different locations. If fuel goes into the vent pipe, the breather assembly lets the fuel drain back into the tank.
The inner and outer tanks each have vent valves which are connected to the related vent pipe. The vent valves close when the fuel level near them increases, and open when the fuel level decreases. This function helps to make sure that fuel does not get into the vent pipes.
Overpressure protectors are installed in the center tank and in the bottom of the surge tank. They make sure the pressure in the center tank or in the surge tank, and thus the inner and outer tanks, does not exceed the design limits. They prevent too high differential pressure.
If the pressure in the center tank increases to a specified value the overpressure protectors break open to release the pressure into the inner tank. If the flow of air into or out of the surge tank is blocked, the overpressure protector breaks open to release the pressure. If fuel enters the surge tank and causes the overpressure protector to operate, then this fuel will go overboard.
A NACA intake is mounted on the access panel of each surge tank. The stack pipe connected to the NACA duct is equipped with a flame arrestor. If a ground fire occurs, it prevents the ignition of the fuel vapor in the surge tank. It also lets air flow freely through it in both directions. If fuel comes out of the overpressure protector, it could go inboard along the wing. A wing fence makes sure that such fuel falls off the wing.

TRIM TANK VENTING

The trim tank is composed of a main vent pipe and a secondary vent pipe. At different locations, a breather assembly is attached to the bottom of each vent pipe and lets the fuel drain back into the trim tank.
The vent valve installed on the inboard-face of RH rib 18 and connected to the main vent pipe makes sure the RH part of the trim tank is open to the surge tank in level flight and during refuel/defuel operations.
The two inner vent valves connected to the main vent pipe make sure the trim tank is open to the surge tank when the A/C climbs.
The LH outer tank vent valve connected to the secondary vent pipe and attached inboard of LH rib 20 closes when the fuel level near to the valve increases.
In the trim surge tank, the NACA intake, flame arrestor and overpressure protector are of the same type as for the wing venting system. If fuel gets into the trim surge vent tank, a check valve installed on the inboard face of RH rib 18 lets this fuel flow back into the trim tank.

G7508471 - G3NT1T0 - FM28D200000003

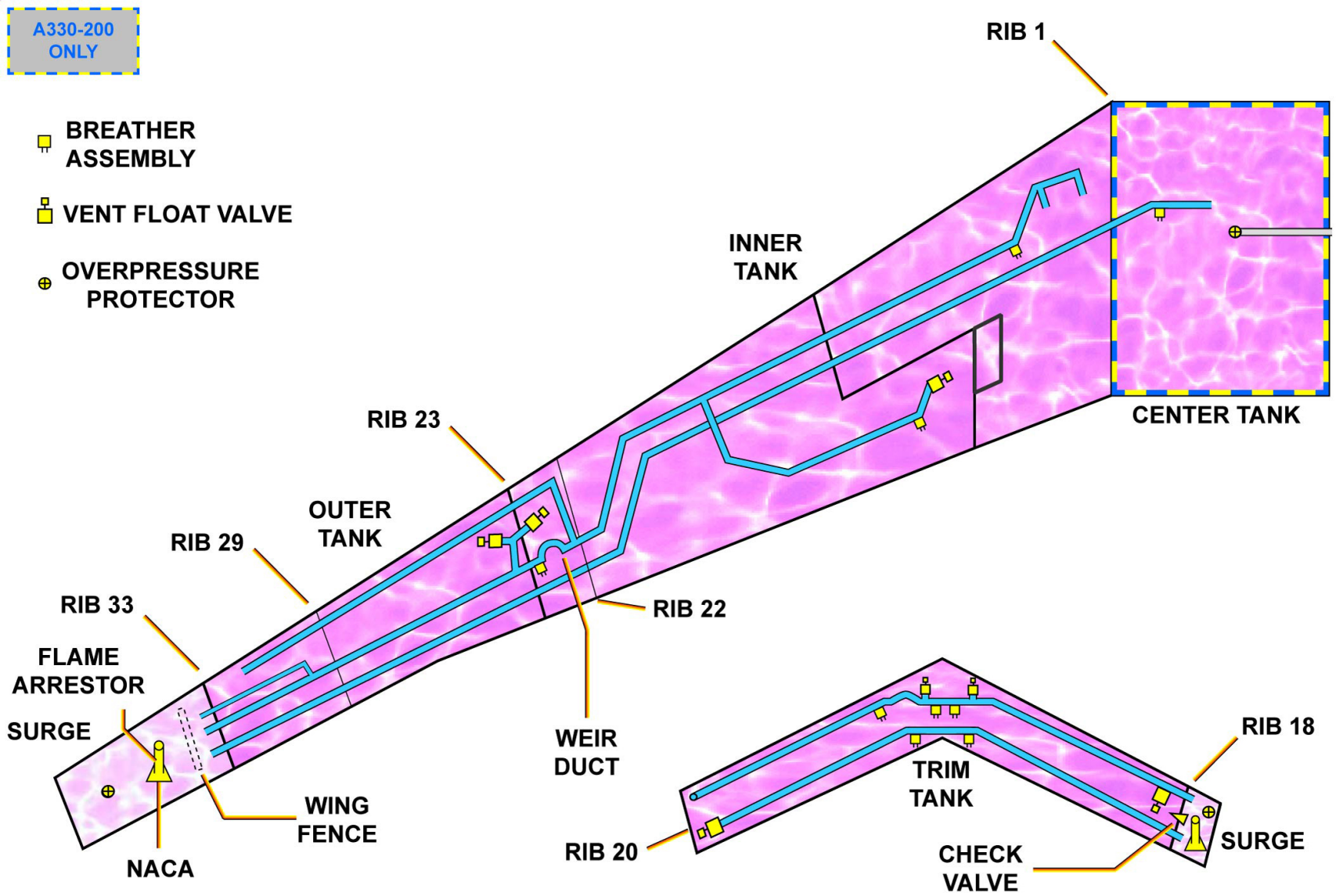

VENTING - WING & CENTER TANKS VENTING & TRIM TANK VENTING

G7508471 - G3NT1T0 - FM28D200000003

FUEL TANK INDICATING D/O (3)

GENERAL

The indicating systems are: Fuel Quantity Indicating (FQI), tank level sensing and temperature measurement.
All this data is sent to the Fuel Control and Monitoring Computers (FCMCs), which transmit it to the ECAM FUEL page and the refuel/defuel control panel.
In case of fuel quantity indication failure, the fuel quantity in the outer tanks, the inner tanks and the center tank can be measured using Manual Magnetic Indicators (MMIs).

G7508471 - G3NT1T0 - FM28D300000003

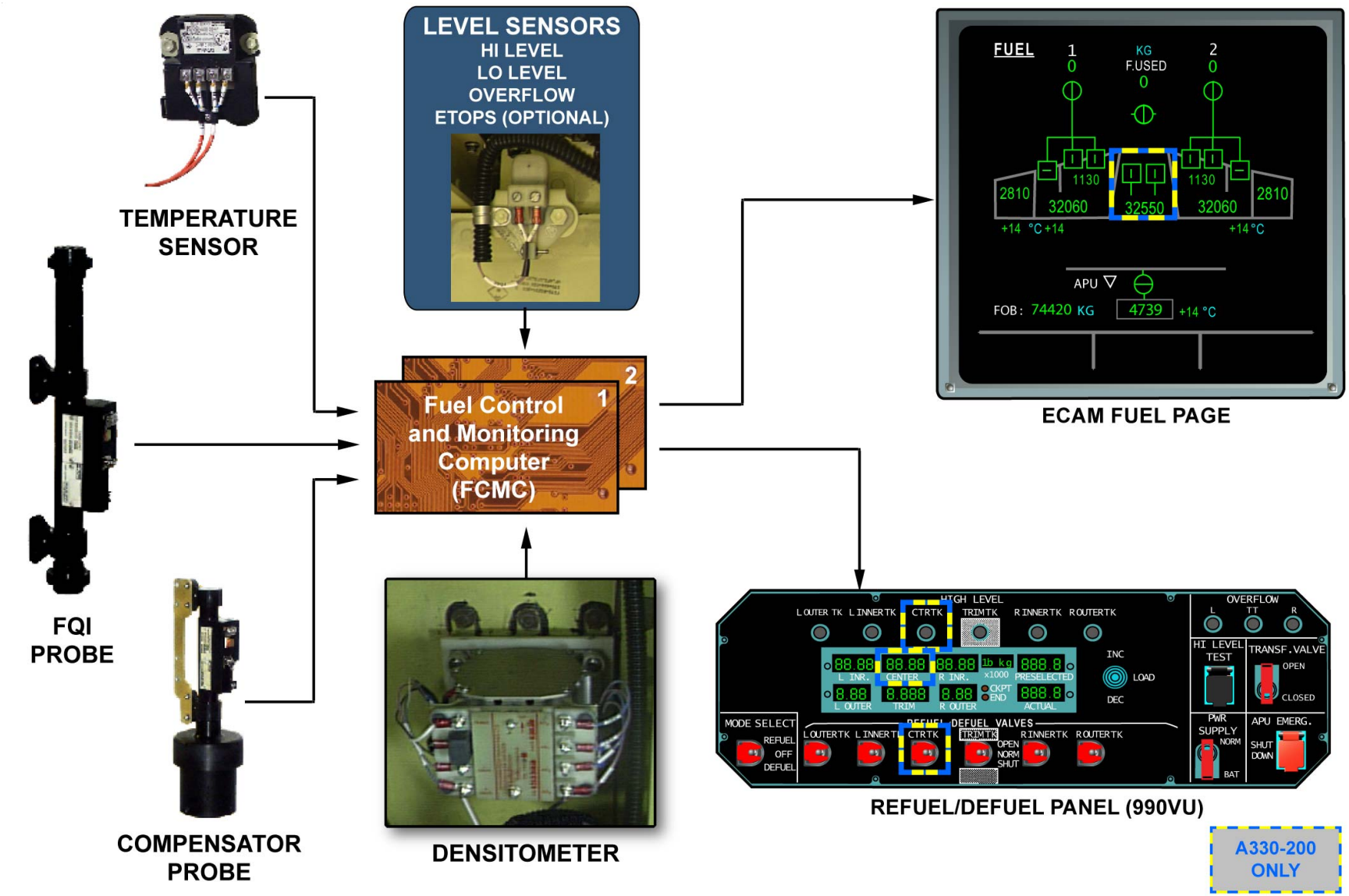
TEMPERATURE SENSOR
LEVEL SENSORS
HI LEVEL
LO LEVEL
OVERFLOW
ETOPS (OPTIONAL)
FQI PROBE
Fuel Control and Monitoring Computer (FCMC)
1
2
COMPENSATOR PROBE
DENSITOMETER
FUEL
KG
F.USED
1130
2810
32060
32550
+14 °C
APU
FOB : 74420 KG
4739
ECAM FUEL PAGE
HIGH LEVEL
OVERFLOW
MODE SELECT
REFUEL
OFF
DEFUEL
DEFUEL VALVES
HI LEVEL TEST
TRANSF.VALVE
OPEN
CLOSED
PWR SUPPLY
NORM
BAT
APU EMERG.
SHUT DOWN
REFUEL/DEFUEL PANEL (990VU)
A330-200 ONLY

GENERAL

FUEL TANK INDICATING D/O (3)

INDICATING

In this topic we shall describe the indicating functions.

FQI PROBES

A set of capacitive probes is installed in each fuel tank. Each probe has a capacitance value which changes in proportion to the depth of fuel in the related tank. The FCMCs continuously measure the capacitance values of all the FQI probes. They then use each set of probes capacitance values to determine the quantity (volume) of fuel in the tank.

COMPENSATORS

The fuel compensators are installed near to the lowest point in the inner tanks with another in the center tank for A330-200 configuration only. The compensator probes operate only when they are fully immersed in fuel and have a capacitance, which is in proportion to the dielectric constant of the fuel. They are used for fuel permittivity determination.

DENSITOMETERS

One densitometer is installed near the lowest point of each inner tank. The densitometersare used by the FCMCs to determine the density of the fuel. After having calculated the volumes of fuel using the FQI probes, the FCMCs are now able to calculate the weight of fuel in each tank

TEMPERATURE SENSORS

6 temperature sensors interface with the FCMCs and are arranged as follows:
- 1 fitted in the LH outer tank,
- 1 fitted in each collector cell,
- 1 fitted in the trim tank.

Each temperature sensor is installed near the lowest part of the tank. This makes sure that the temperature sensor is kept in the fuel most of the time. The electrical resistance of the temperature sensors changes in proportion to the fuel temperature. These sensors are to give the fuel temperature of the different tanks on the ECAM Fuel page and also for fuel LO TEMP or HI TEMP warning activation.

G7508471 - G3NT1T0 - FM28D300000003

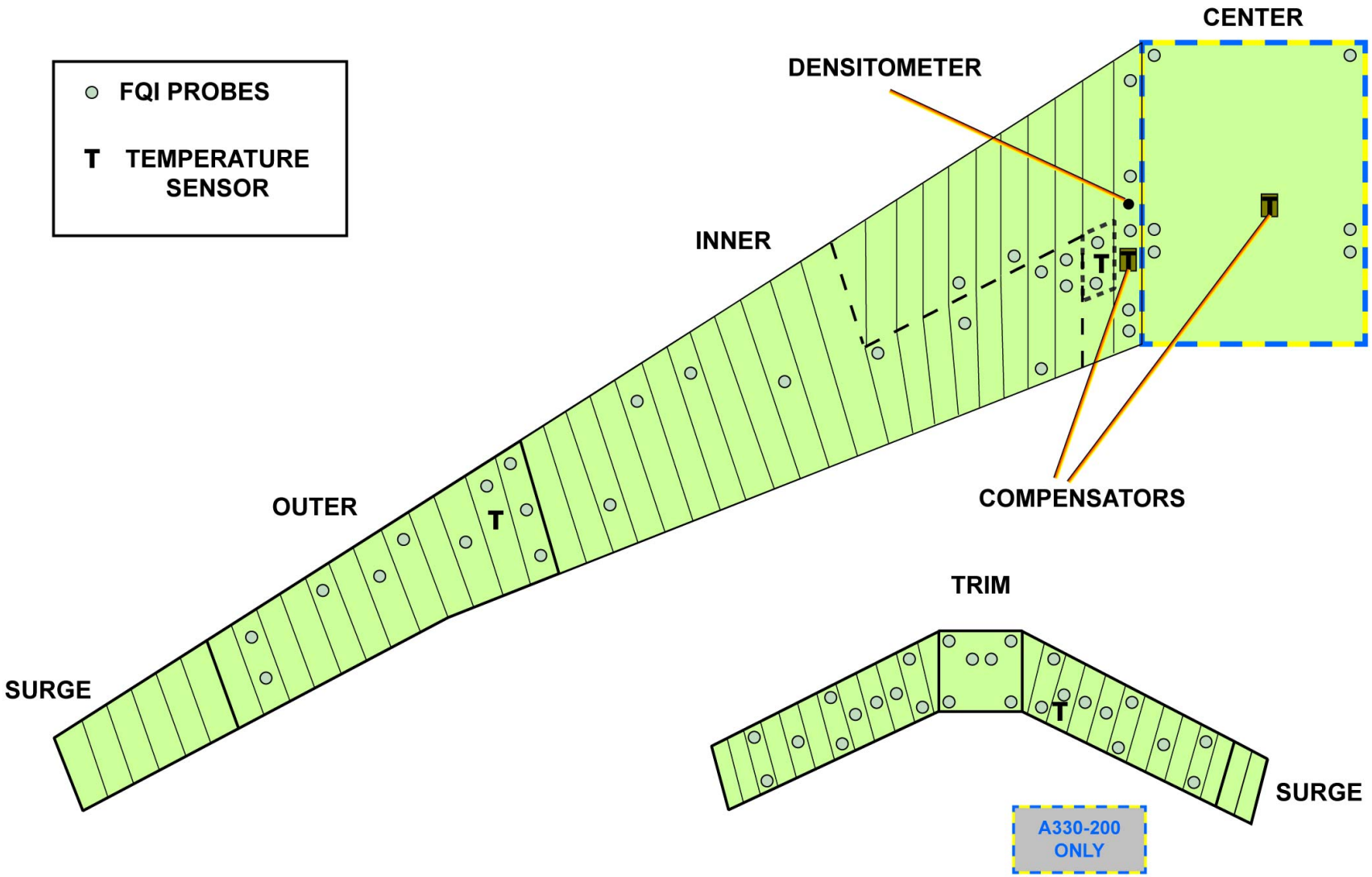

INDICATING - FQI PROBES ... TEMPERATURE SENSORS

G7508471 - G3NT1T0 - FM28D300000003

FUEL TANK INDICATING D/O (3)

INDICATING (continued)

FUEL LEVEL SENSING

Each FCMC uses fuel level sensing data coming from the following sensors:
- High level sensors,
- Low level sensors,
- Overflow sensors,
- ETOPS sensors (optional).

For each FCMC applicable level sensing area, one probe is connected to FCMC 1 and the other to FCMC 2. FCMC 1 or 2 receives the opposite FCMC level sensing by cross-wired discretes.
Each level sensor is fitted with a thermistor. The FCMC measures the difference in resistance of the thermistor to determine when the sensor is in the fuel or out of the fuel.
All high level sensors and overflow sensors have a fail state "WET" whereas the low level sensors have a fail state "DRY"
The high level sensors are installed by pairs in each tank. Each sensor of a pair sends signal to a different FCMC. When both high level sensors of a fuel tank become wet, the FCMC that is in control closes the related tank inlet valve.
The high level sensors of the center tank (A330-200 only) are installed at a different height. During refueling, when the lowest sensor becomes wet, the FCMC closes the center tank inlet restrictor valve. Then when the highest sensor becomes wet, the FCMC closes the center tank inlet valve. This permits to get a smooth end of refueling of the center tank.
The low level sensors are fitted in each tank except in the outer tanks. Two sensors are installed in each inner tank, one sensor in the center tank (A330-200 only) and one sensor in the trim tank. They are used to control fuel operations and to trigger low level warnings.
- When any inner tank low level sensor becomes dry, the FCMC stops the jettison operation, if selected. The inner tank low level quantity is 1600 kg (3520 lb).
- When the center tank low level sensor is dry, the FCMC stops the operation of the center tank transfer pumps.
- When the trim tank low level sensor is dry, the FCMC closes the trim tank isolation valve to make sure the trim tank and the trim pipe do not drain.

One overflow sensor is installed in each surge tank. The overflow sensor may become wet during refueling. In such a case the FCMC closes all inlet valves, the refuel isolation valve and triggers an ECAM warning.
A wing overflow sensor becomes wet when there are 450 liters in the surge tank.
Optionally, one ETOPS warning sensor can be fitted in each inner tank. These sensors are installed at a height corresponding to a fuel quantity that is sufficient for 180 minutes flying. When one of the ETOPS warning sensors becomes dry, the FCMC sends a FUEL ETOPS RESERVE / FOB BELOW 17T warning.

G7508471 - G3NT1T0 - FM28D300000003

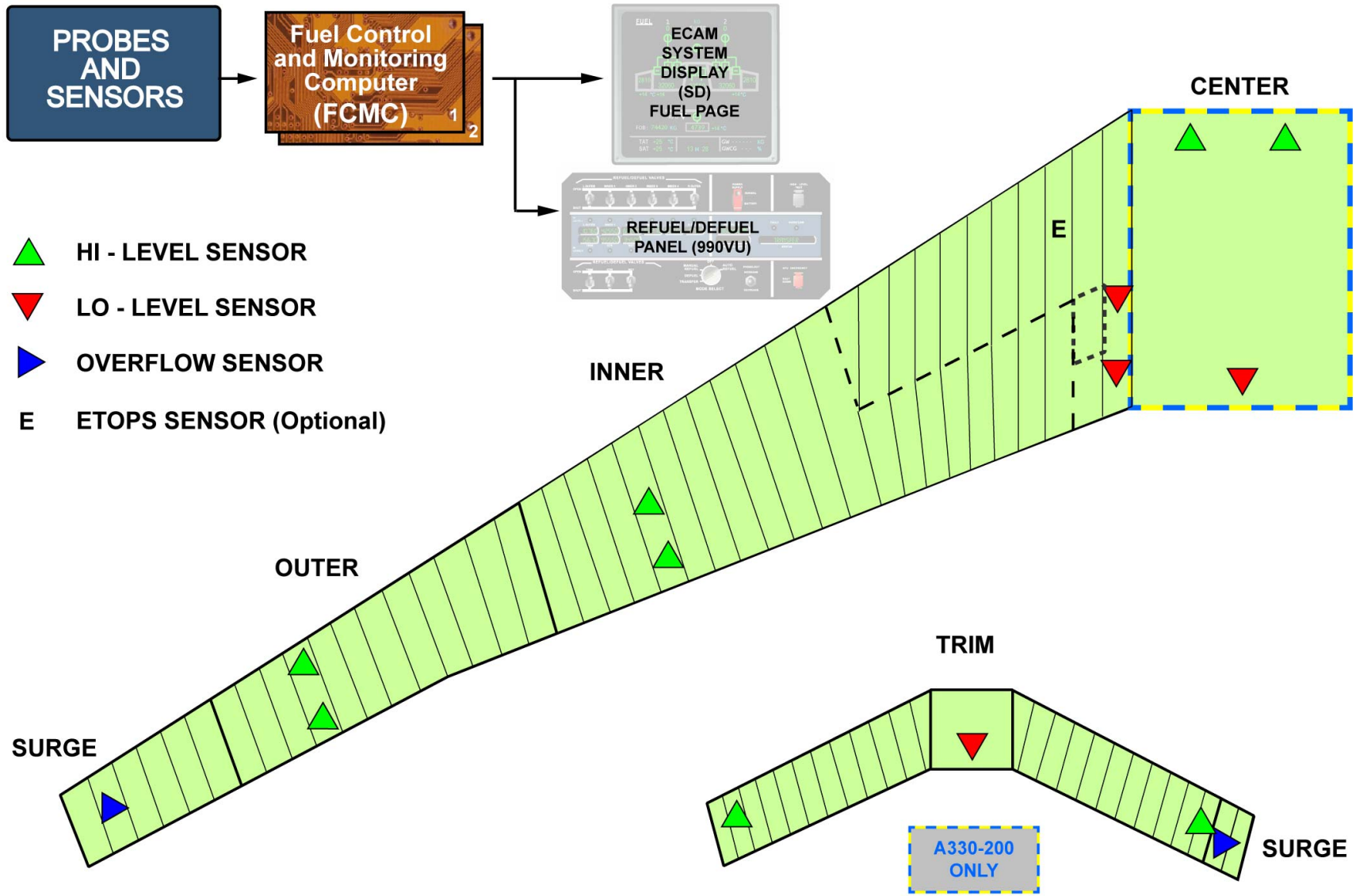

INDICATING - FUEL LEVEL SENSING

FUEL TANK INDICATING D/O (3)

INDICATING (continued)

FCMC MEASUREMENT

Both FCMCs receive:
- fuel data from the different probes,
- THS position from both Flight Control Data Concentrators (FCDCs),
- aircraft attitude, acceleration and pitch and roll angles from the 3 Air Data and Inertial Reference Units (ADIRUs).

With this data, each FCMC performs all fuel quantity and temperature measurements and indications.

Each FCMC contains the COMmand, MONitor and integrity checker processors. Each processor concurrently computes fuel quantity and temperature measurements using different software and different information sources to provide reliable data.

COM and MON processors compute usable fuel quantity in the tank using computed fuel surface attitude derived from FQI probe capacitance values and the fuel permittivity. They use the fuel volume calculation together with the density data to find the fuel mass (fuel quantity), which is more appropriate than volume. The data is then transmitted to the ECAM FUEL page and to the refuel panel indicator.

The refuel panel indicator is slave to the FCMCs displaying the ARINC 429 received data.

The level sensing operates independently inside the FCMC. Each FCMC has an independent level sensing board interfacing with a maximum of 14 level sensing channels. Each FCMC uses all level sensing data for command computation and warning activation.

For each FCMC applicable level sensing area, one sensor is connected to FCMC 1 and the other to FCMC 2. FCMC 1 (or 2) receives the opposite FCMC level sensing status by cross-wired discretes.

The FUEL QUANTITIES menu enables to access the fuel quantities of any fuel tanks. The INPUT PARAMETERS menu gives access to the fuel permittivity, density and temperature data.

G7508471 - G3NT1T0 - FM28D300000003

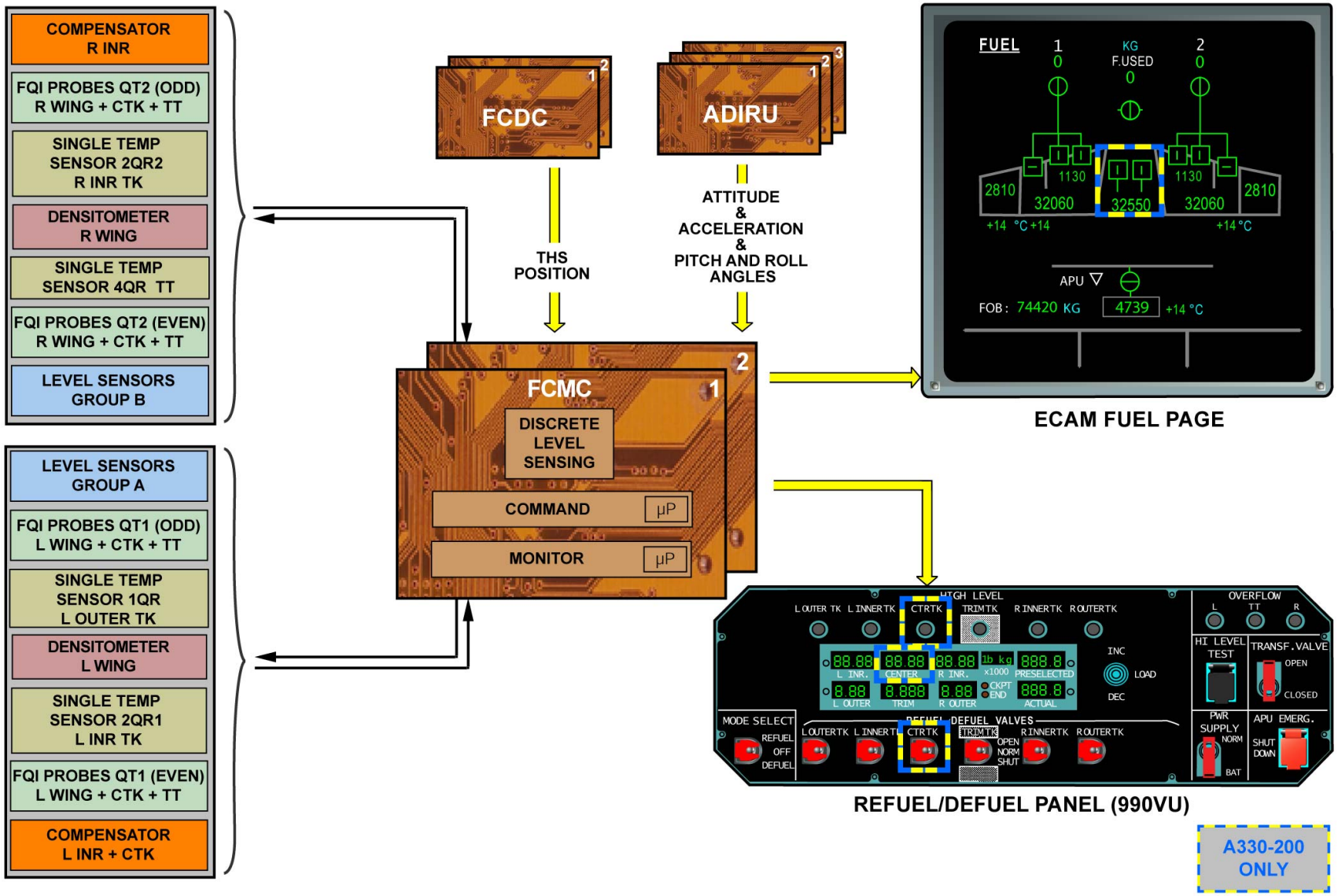

INDICATING - FCMC MEASUREMENT

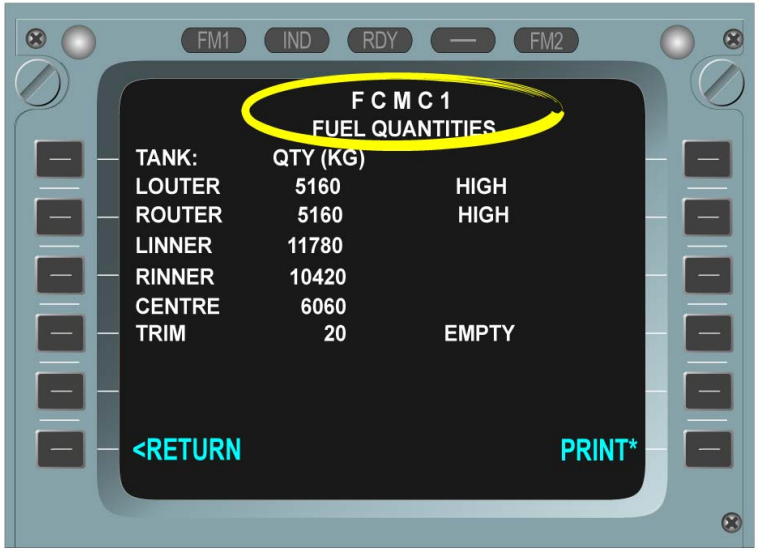

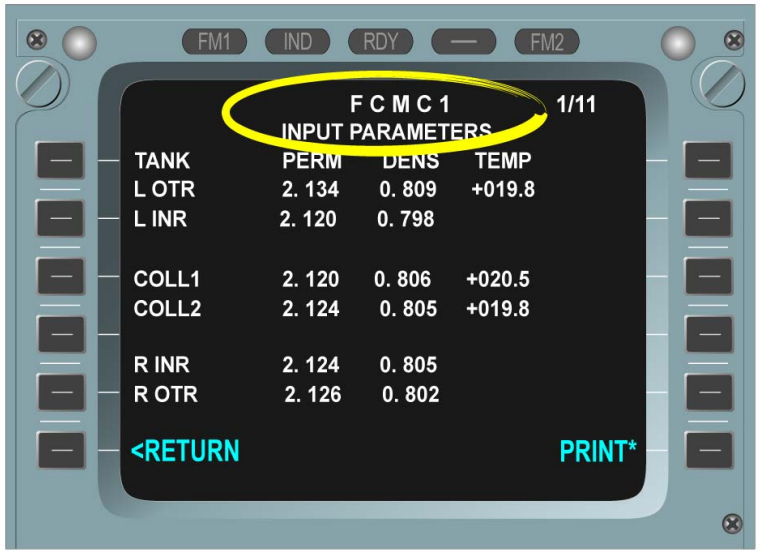

INDICATING - FCMC MEASUREMENT

This Page Intentionally Left Blank

G7508471 - G3NT1T0 - FM28D300000003

FUEL TANK INDICATING D/O (3)

INDICATING (continued)

REFUEL/DEFUEL PANEL INDICATIONS

The fuel quantity indicator of the Refuel/Defuel panel displays the quantity of fuel in each tank, the actual total fuel quantity in the aircraft, and the preselected fuel quantity used for automatic refueling. The high level lights come on blue when the related fuel tank high level sensors are wet. An amber overflow light comes on if the associated surge tank sensor becomes wet. Each light has a filament press-to-test facility that permits to check the integrity of the lamp. The HI-LEVEL TEST P/BSW is used to test the high level and overflow sensors and their associated circuits. When this P/BSW is pressed, the status of all high level lights and overflow lights is inverted. In addition, the fuel quantity indicator shows "8s", the CKPT and END lights come on.

G7508471 - G3NT1T0 - FM28D300000003

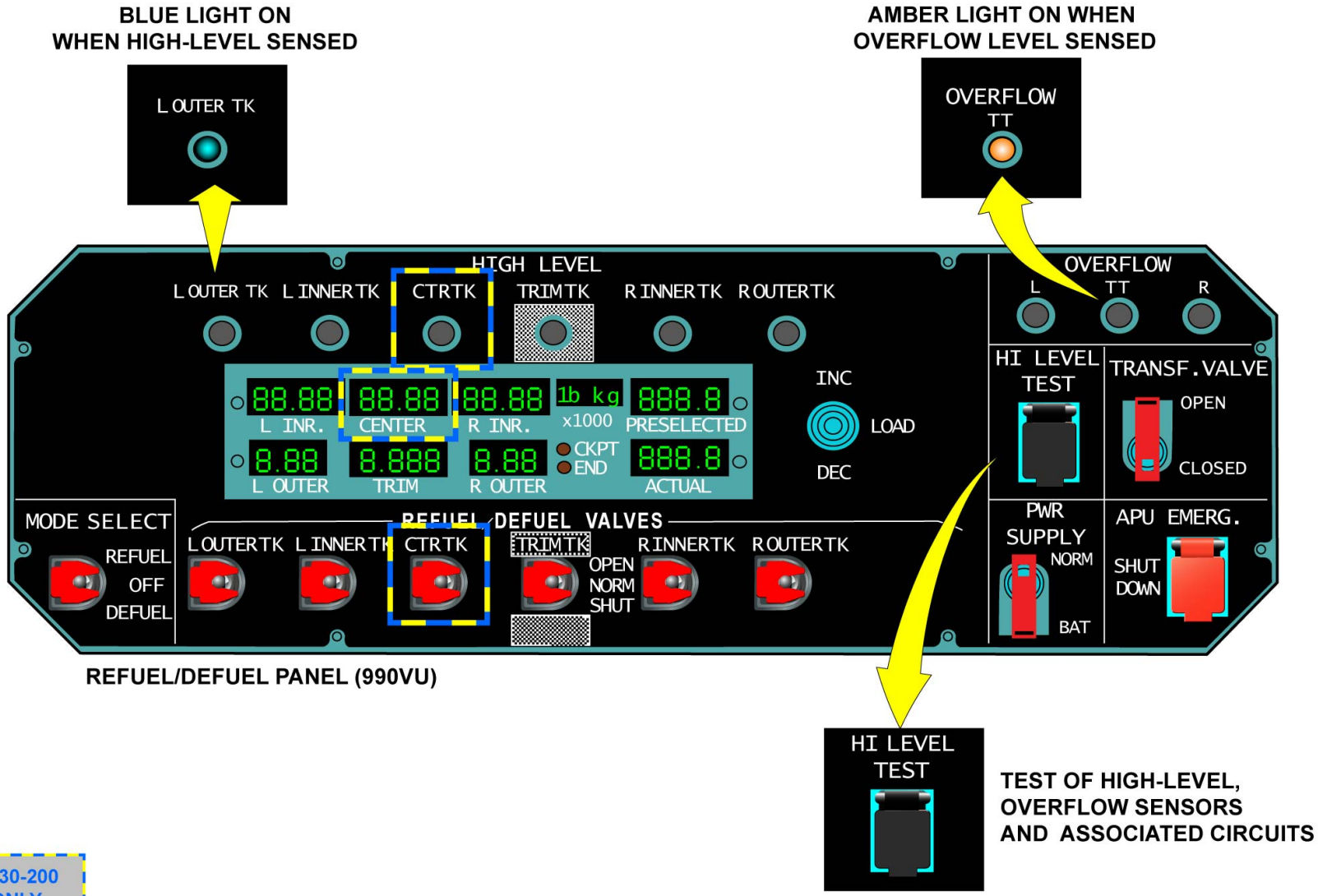

INDICATING - REFUEL/DEFUEL PANEL INDICATIONS

G7508471 - G3NT1T0 - FM28D300000003

FUEL TANK INDICATING D/O (3)

INDICATING (continued)

FUEL QUANTITY INDICATION DEGRADATION/FAILURE

A degraded fuel quantity indication is identified by amber dashes on the last two digits of tank quantity and total fuel quantity indications on ECAM and on the Refuel panel. It is detected by the FCMC when the fuel quantity in any tank cannot be determined with the nominal accuracy, but remains within an acceptable accuracy level. A degraded fuel quantity indication does not impact the aircraft dispatch conditions.

A failed fuel quantity indication is identified by amber XX in place of the failed tank quantity and total fuel quantity indications on ECAM and on the Refuel panel. It is detected by the FCMC when the fuel quantity in any tank cannot be determined within an acceptable accuracy level. A dedicated MEL item gives the corresponding aircraft dispatch conditions, including a manual calculation of tank quantity after refueling using the Magnetic Level Indicators (MLI), except for the trim tank.

A failed or mis-reading probe can be identified via the FCMC INPUT PARAMETERS menu on the MCDU. Any degraded or failed quantity indication is respectively signaled by "?" or "---.-" indications in place of the corresponding probe capacitance value. The identification and Functional Item Number (FIN) of the affected probe can be retrieved using dedicated tables in AMM 28-51-00 chapter.

G7508471 - G3NT1T0 - FM28D300000003

A330-300 RIGHT INNER "DASHED" (SERVICEABLE)

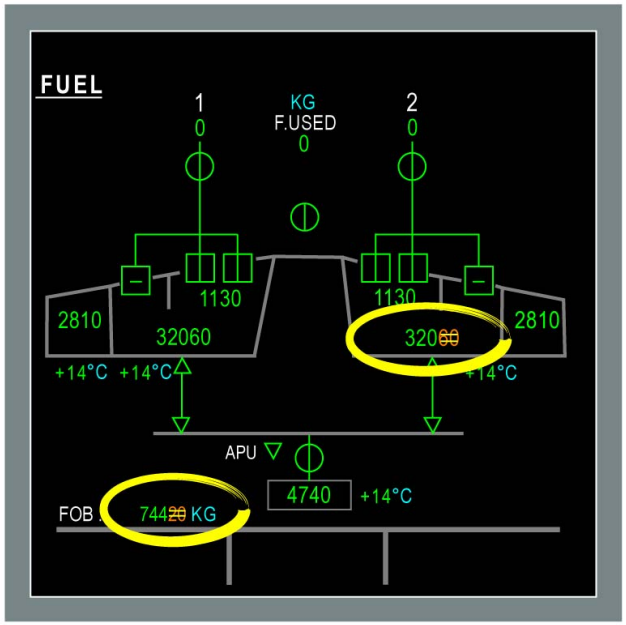

REFUEL/DEFUEL PANEL (990VU)

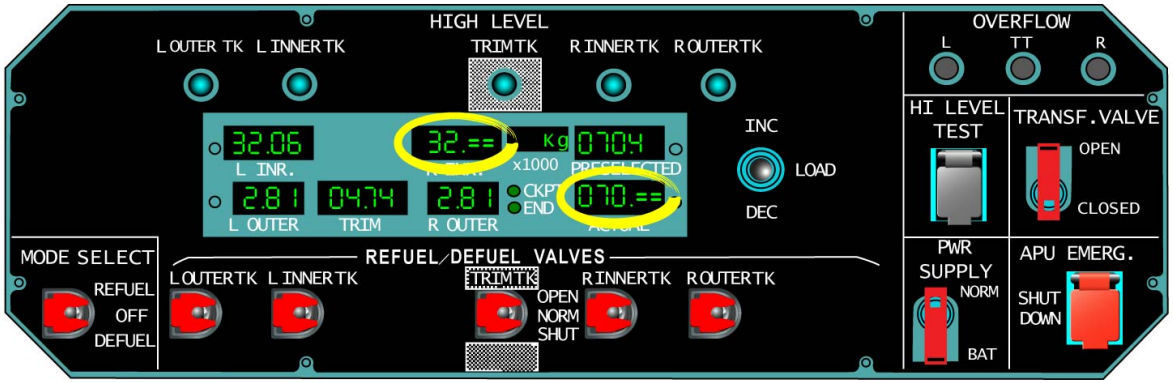

INDICATING - FUEL QUANTITY INDICATION DEGRADATION/FAILURE

G7508471 - G3NT1T0 - FM28D300000003

A330-200 CENTER TANK INDICATION INOP

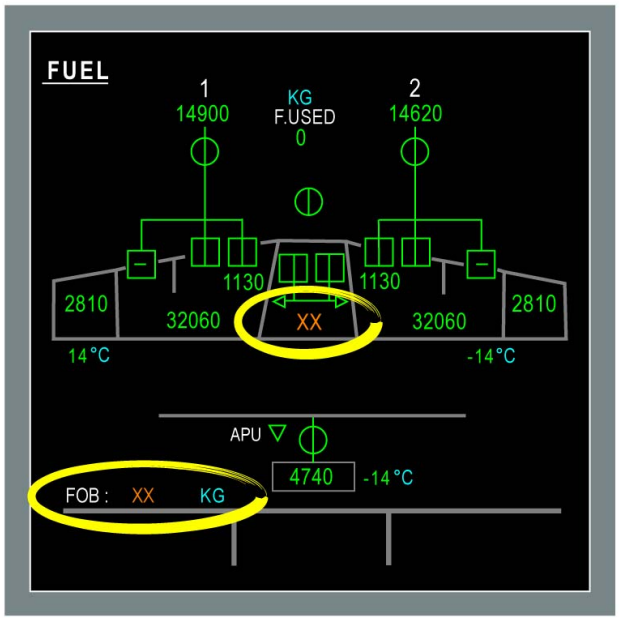

REFUEL/DEFUEL PANEL (990VU)

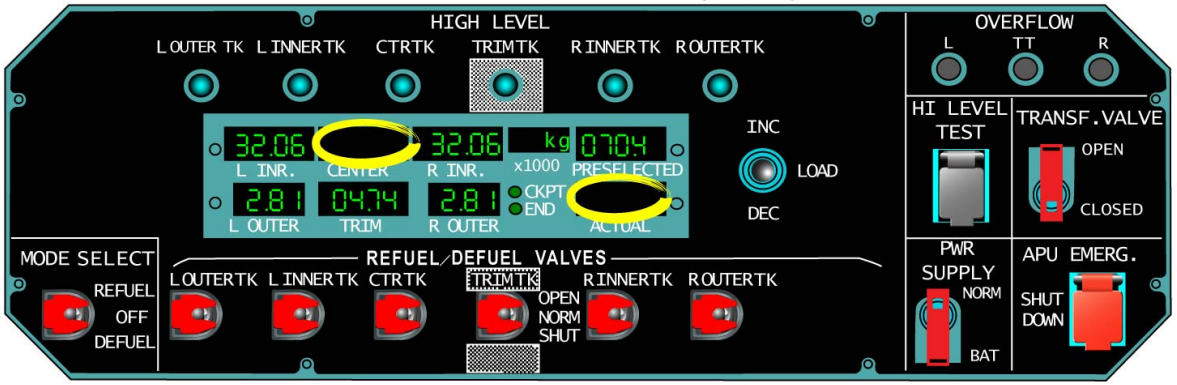

INDICATING - FUEL QUANTITY INDICATION DEGRADATION/FAILURE

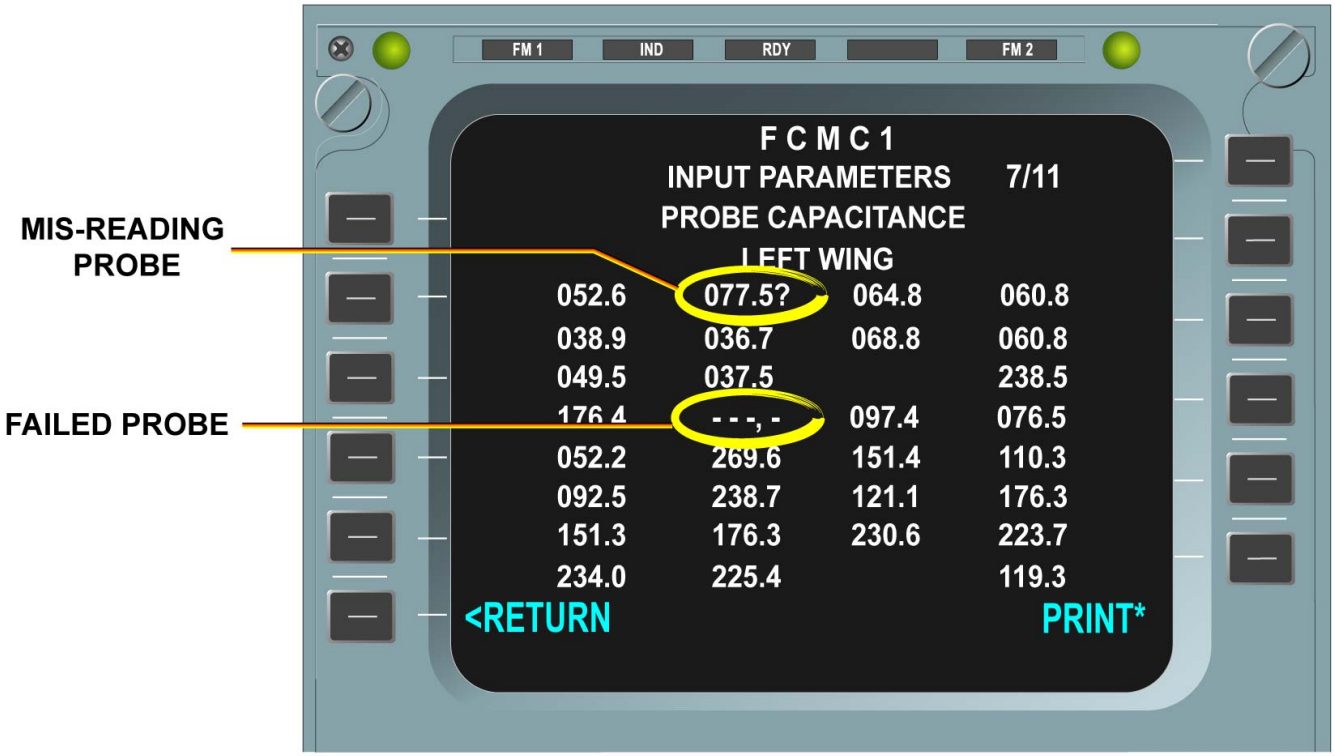

INDICATING - FUEL QUANTITY INDICATION DEGRADATION/FAILURE

G7508471 - G3NT1T0 - FM28D300000003

NOTES: 1. IF THE FCMC CALCULATES THAT A PROBE IS UNSERVICEABLE, THE APPLICABLE DISPLAY WILL SHOW A '-' (DASH).

NOTES: 2. THE WET MAX VALUE IS WITH THE PROBE FULLY IMMERSED AND WITH 'K' = 2.3.

AMM 28-51-00 used to retrieve indentification of faulty probes.

GRID:		A	B	C	D	
	01		FCMC 1			
	02		INPUT PARAMETERS 7/11			
L1	03		PROBE CAPACITANCE			R1
	04		LEFT WING			
L2	05	052.6	077.5	064.8	060.8	R2
	06	038.9	036.7	068.8	060.8	
L3	07	049.5	037.5		238.5	R3
	08	176.4	121.0	097.4	076.5	
L4	09	052.2	289.6	151.4	110.3	R4
	10	092.5	238.7	121.1	176.3	
L5	11	151.3	176.3	230.6	223.7	R5
	12	234.0	225.4		119.3	
L6	13	<RETURN			PRINT*	R6
	14					

			CAPACITANCE VALUES		
GRID REF	FIN	LRU IDENTIFICATION	DRY	TOLERANCE	WET MAX
A05	17QT1	LEFT OUTER TANK PROBE 1	24.91	+/- 0.51	57.81
B05	15QT1	LEFT OUTER TANK PROBE 2	38.44	+/- 0.57	85.10
C05	13QT1	LEFT OUTER TANK PROBE 3	30.60	+/- 0.54	71.27
D05	11QT1	LEFT OUTER TANK PROBE 4	28.79	+/- 0.53	67.00
A06	9QT1	LEFT OUTER TANK PROBE 5	24.91	+/- 0.51	57.81
B06	16QT1	LEFT OUTER TANK PROBE 6	17.36	+/- 0.47	40.14
C06	14QT1	LEFT OUTER TANK PROBE 7	32.54	+/- 0.55	75.69
D06	12QT1	LEFT OUTER TANK PROBE 8	28.79	+/- 0.53	67.00
A07	10QT1	LEFT OUTER TANK PROBE 9	27.06	+/- 0.52	62.90
B07	8QT1	LEFT OUTER TANK PROBE 10	24.91	+/- 0.51	57.81

INDICATING - FUEL QUANTITY INDICATION DEGRADATION/FAILURE

G7508471 - G3NT1T0 - FM28D300000003

This Page Intentionally Left Blank

G7508471 - G3NT1T0 - FM28D300000003

FUEL TANK INDICATING D/O (3)

INDICATING (continued)

MANUAL MAGNETIC INDICATORS

All the wing Manual Magnetic Indicators (MMIs) are installed in the bottom surface of the fuel tanks. Access to the Magnetic Level Indicators (MLIs) is from below the wing. The MMIs are installed as follows:
- 4 in each inner tank,
- 1 in the center tank,
- 2 in each outer tank.

Each MMI has an MLI contained in its related Magnetic Level Indicator Housing (MLIH).
The center tank has two MLIHs. The upper housing is installed in the bottom skin of the center tank. The lower housing is installed in the belly fairing immediately below the upper housing. The center tank MMI extends from the fuel tank bottom to the A/C bottom skin. When an MLI is extended from its related housing, the fuel level in that area of the fuel tank can be measured. To measure the quantity of fuel in the wing tanks it is necessary to:
- extend and read the MLIs,
- use the ADIRS to read the attitude of the A/C (in pitch and roll),
- measure the specific gravity of the fuel.

A set of mathematical tables is then used to make the fuel quantity calculation.

G7508471 - G3NT1T0 - FM28D300000003

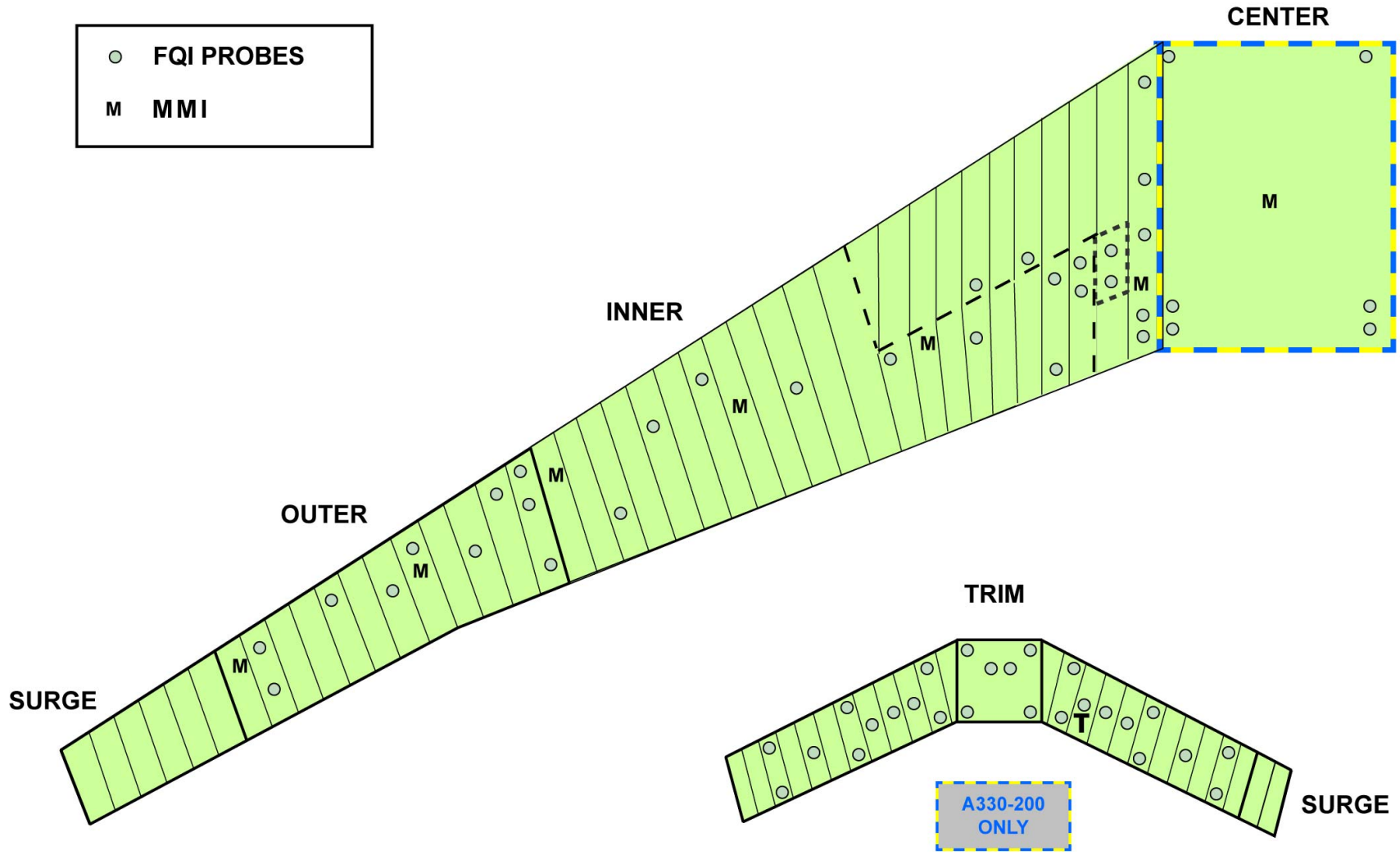

INDICATING - MANUAL MAGNETIC INDICATORS

G7508471 - G3NT1T0 - FM28D300000003

ENGINE FEED D/O (3)

GENERAL

The engine fuel pump system supplies the fuel from the inner tank collector cells to the engines. Each LP valve isolates the engine fuel feed supply at any shutdown or in case of emergency. The crossfeed system divides the engine feed system into two independent feed systems.

G7508471 - G3NT1T0 - FM28D400000003

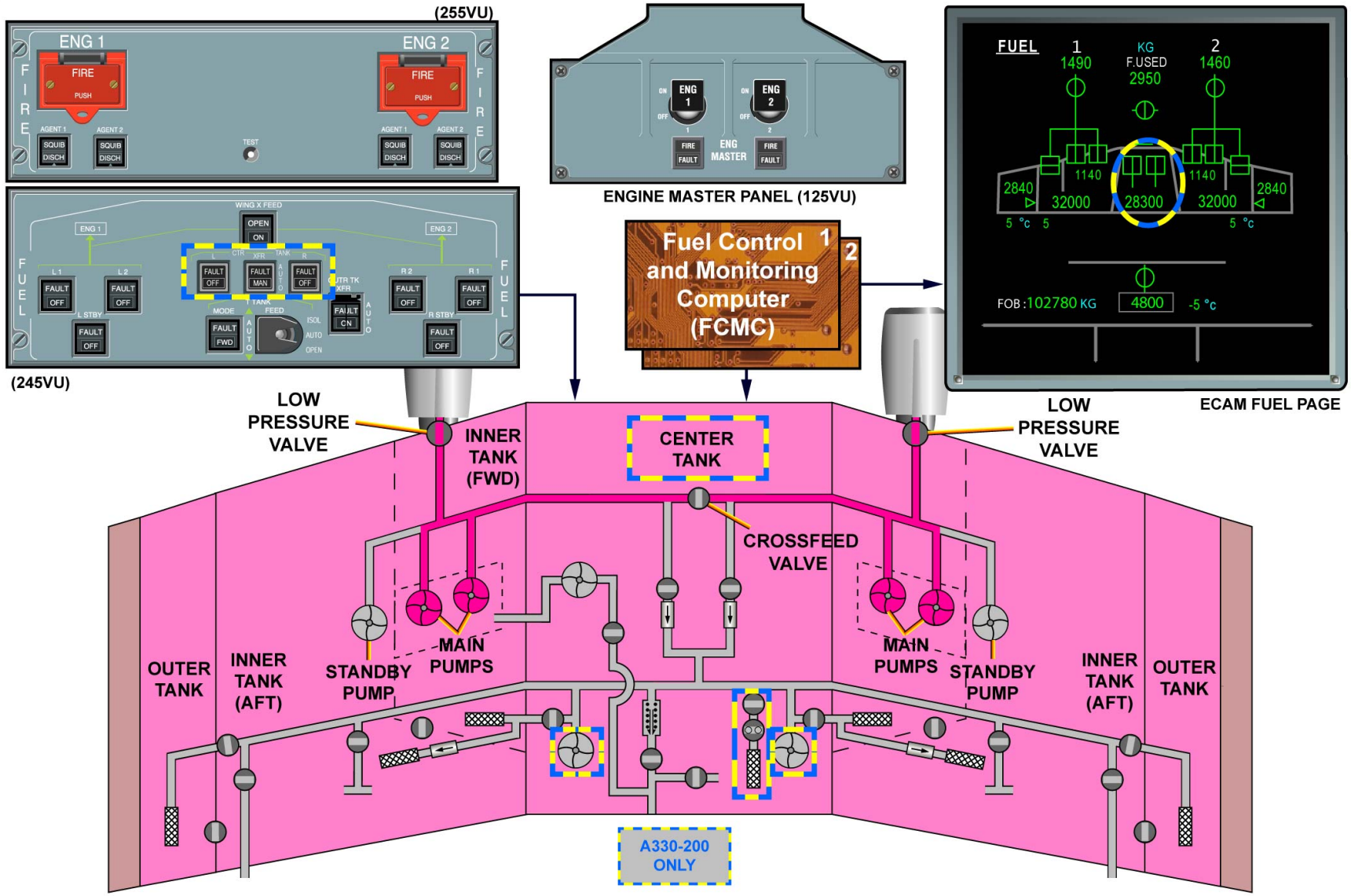
(255VU)
ENG 1
ENG 2
FIRE
PUSH
AGENT 1
AGENT 2
SQUIB DISCH
TEST
(245VU)
WING X FEED
OPEN
ON
FAULT
OFF
MAN
FWD
CN
MODE
FEED
ISOL
AUTO
OPEN
ENGINE MASTER PANEL (125VU)
ENG MASTER
Fuel Control and Monitoring Computer (FCMC)
1
2
FUEL
KG
F.USED
2950
1490
1460
1140
2840
32000
28300
5 °c
FOB :102780 KG
4800
-5 °c
ECAM FUEL PAGE
LOW PRESSURE VALVE
INNER TANK (FWD)
CENTER TANK
CROSSFEED VALVE
OUTER TANK
INNER TANK (AFT)
STANDBY PUMP
MAIN PUMPS
A330-200 ONLY

GENERAL

ENGINE FEED D/O (3)

DESCRIPTION

This topic describes the main components of the engine feed.

FUEL PUMPS

Installed in each collector cell are:
- a fuel pump canister and its related fuel pump element which together make the two main pumps,
- a fuel pump canister and its related fuel pump element which together make the standby pump,

The canister, attached to the wing bottom skin, makes the replacement of the fuel pump element possible when there is fuel in the collector cell.
Pumps and canisters are all assembled in the same way and are interchangeable. The centrifugal-type pump is driven by a 3-phase 115 VAC motor. The pumps get their fuel supply from the lowest part of the collector cell. When they are in operation, each pump has two outlets, one outlet for the engine feed pipe, and the other for jet pump.

CHECK VALVES

A check valve is installed in each pump canister outlet. When the fuel pumps are not in operation, the two check valves prevent a reverse flow either from the engine feed line or the jet pumps.

MAIN JET PUMPS

Also installed in each collector cell is a jet pump to keep the collector cell full of fuel.
The fuel supply from the pump through the jet pump nozzle causes suction. This suction causes fuel to be moved from the inner cell to the collector cell. The rate of flow makes sure that the collector cell is kept full of lightly pressurized fuel to prevent fuel pump cavitations during negative 'G' load conditions.

STANDBY JET PUMP

A Water Scavenge Jet Pump is installed in rib 3 area of the wing in the vicinity of the standby fuel pump. This Jet Pump has an induced flow line to the rib bay 3-4 tank sump and receives motive flow from the Standby Pump. Water accumulated in rib bay 3-4 will then be scavenged as long as the Standby Pump operates.

PRESSURE SWITCHES

Each fuel pump has an output monitoring LP switch installed on the rear face of the wing spar. It operates between 6 and 8 psi depending on pressure increase or decrease.

THERMAL RELIEF VALVES

To prevent excessive pressure a thermal relief valve is installed on each engine feed line and installed near the main pump of engine feed outlet in the collector cell. In case of fuel temperature increase and engine not running, this thermal relief valve will prevent fuel pipe damage due to fuel expansion between closed LP and crossfeed valve. This valve is of the ball and spring type.

AIR RELEASE VALVES

Air release valves release air caught in the engine fuel feed line and crossfeed line. There is one air release valve located near each LP valve; another one is installed on the crossfeed line in the center tank. They are used to decrease the quantity of air which could go to an engine during engine feed or crossfeed operation. They are of the float type.

LP VALVES AND ACTUATORS

Each LP valve and associated actuator isolates its related engine from the engine fuel feed-line. The LP valve is installed on the inner tank wing front spar in the engine feed line. The interface between the actuator and the LP valve is a valve spindle that goes through the front

G7508471 - G3NT1T0 - FM28D400000003

spar. When the actuator is energized, it moves the LP valve to the open or closed position. The LP valves are of the ball type. The actuators include 2 electrical motors and a visual position indicator.

CROSSFEED VALVE AND ACTUATORS

The crossfeed valves, of the ball-valve type, make the interconnection of engine feed systems. The crossfeed valve is operated with a twin motor actuator. It is installed in the center fuselage area or in the center tank for the A330-200 system. The actuator is mounted on the rear spar and has a visual indicator.

G7508471 - G3NT1T0 - FM28D400000003

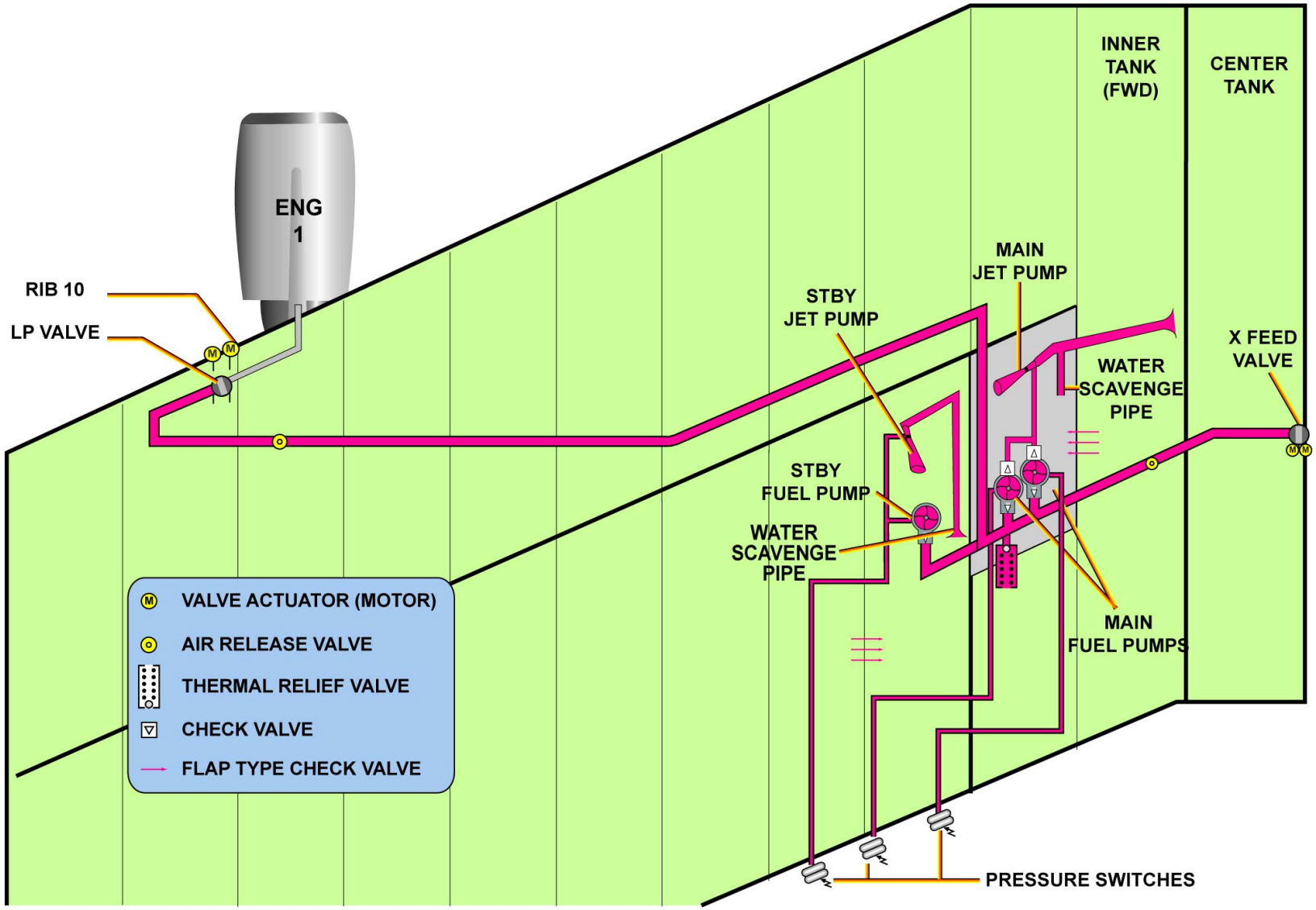

DESCRIPTION - FUEL PUMPS ... CROSSFEED VALVE AND ACTUATORS

G7508471 - G3NT1T0 - FM28D400000003

This Page Intentionally Left Blank

G7508471 - G3NT1T0 - FM28D400000003

ENGINE FEED D/O (3)

OPERATION

This topic describes the main operation of the engine feed. As the engine feed systems are almost the same for each engine, only the operation of the left engine feed system is given here.

ENGINE FEED OPERATION

The main fuel pump system is manually controlled from the fuel panel through A/C relay logic. For the system to operate it is necessary to:
- energize the 115 VAC bus and the 28 VDC bus,
- close the main and standby fuel pump C/Bs.

Main and standby power supplies are from different sources.
The main and standby pumps P/BSWs are usually set to ON together. The main pumps then operate continuously. The standby pump only operates when the main pumps become defective or are set to OFF.
When the two main pumps are in operation, their pressure switches provide a ground for the STBY FUEL PUMP AUTO CTL 1. Then the contactor connects a 115 VAC supply to energize the main fuel pumps. If a main fuel pump fails or is set to OFF, the pressure from the pump decreases. When the pressure is less than 0.41 bar (6 psi) its pressure switch removes the ground to the STBY FUEL PUMP AUTO CTL 1 and supply the standby fuel pump contactor. Then the standby fuel pump supply the engine.
An improved water scavenge function in the rib bay 3-4 area (Standby Pump location) is ensured by the Standby Fuel Jet Pump fed by the Standby Pump operation.
This function is controlled automatically by the FCMC (via relay control logic not shown on the slide) by operating automatically the Standby Pump when :
- aircraft is on the ground (LGCIU signal),
- both main fuel pumps have been selected on the corresponding wing
- engines are confirmed in IDLE thrust after engine start procedure (EIVMU signal).

Water accumulated in rib bay 3-4 will then be scavenged and the FCMC will stop automatically the Standby Pump after Take Off (aircraft in FLT). This water scavenge function will not be re-engaged by the FCMC during the rest of the flight and it will not interfere the normal pump control system.
The Flight Control and Monitoring Computers (FCMCs) receive discretes from the P/BSWs, from the pressure switches and from the fuel pump contactors. This data is used for system status monitoring, fault reporting and indication through the ECAM system.

G7508471 - G3NT1T0 - FM28D400000003

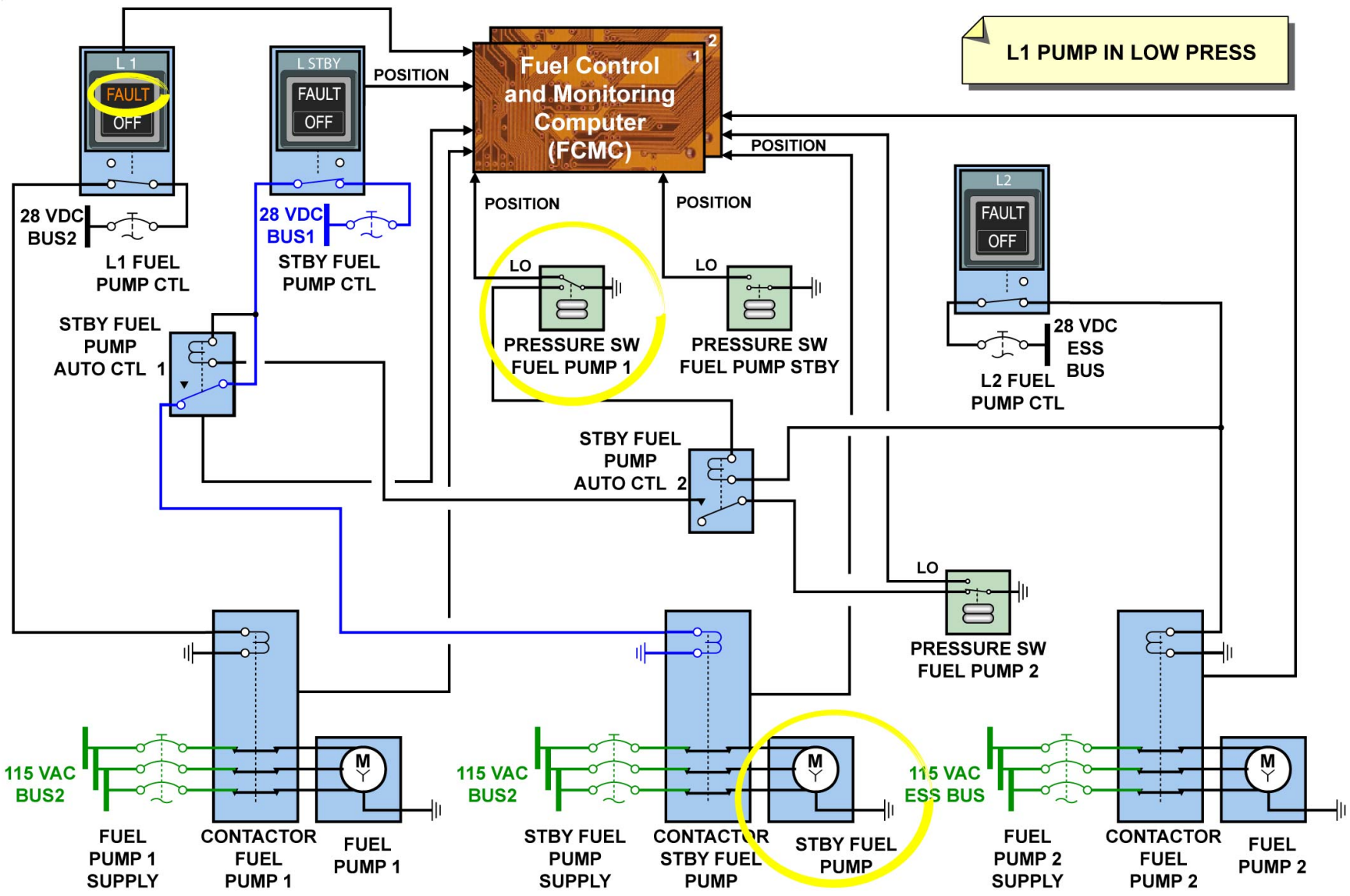

OPERATION - ENGINE FEED OPERATION

G7508471 - G3NT1T0 - FM28D400000003

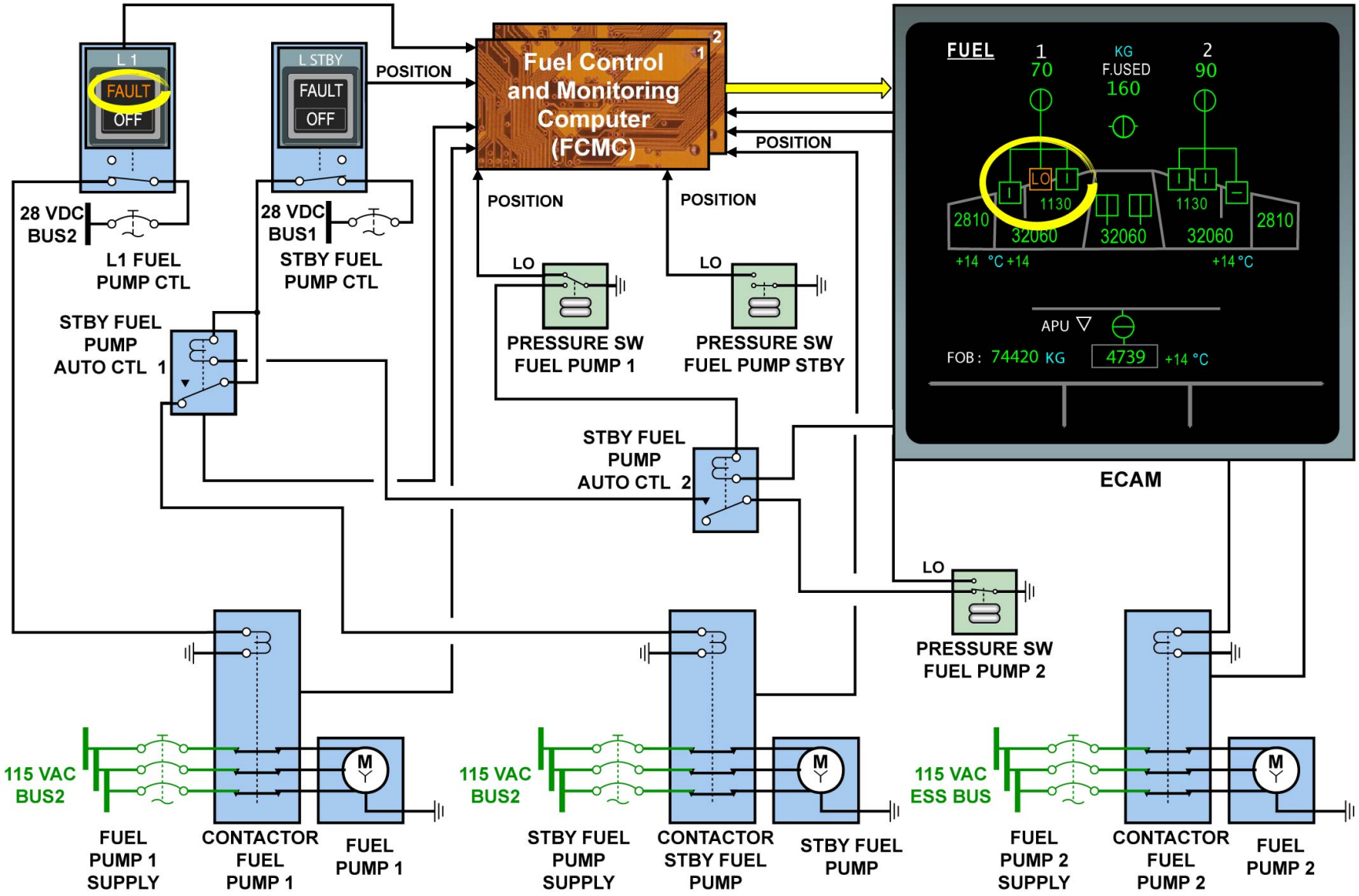

OPERATION - ENGINE FEED OPERATION

G7508471 - G3NT1T0 - FM28D400000003

This Page Intentionally Left Blank

G7508471 - G3NT1T0 - FM28D400000003

ENGINE FEED D/O (3)

OPERATION (continued)

ENGINE FEED ABNORMAL OPERATION

If a main pump becomes defective or is set to OFF, the fuel pressure from the pump decreases. When the pressure is 0.41 bar (6 psi) the fuel pump pressure switch removes the ground to the standby fuel pump automatic-control 1 relay. The relay connects a 28 VDC supply to the standby fuel pump control contactor which connects a 115 VAC supply to energize the standby pump. Following the failure detection, an ECAM message is triggered and the FUEL SD page is displayed. If the main and standby pumps do not operate, engine gravity feed is still available through the pumps. The engine causes a suction that pulls fuel through the fuel pump inlet, through the outlet check valve and into the engine feed line.

In case of emergency electrical configuration, only the left main pump 2 is electrically supplied from the Constant Speed Motor/Generator (CSM/G), in order to restart or supply fuel to any of the two engines. If the left main pump 2 is set to OFF or FAULT, the right main pump 2 will operate. If the LAND RECOVERY P/BSW is pushed, the running pump stops automatically and the two engines are then gravity fed.

G7508471 - G3NT1T0 - FM28D400000003

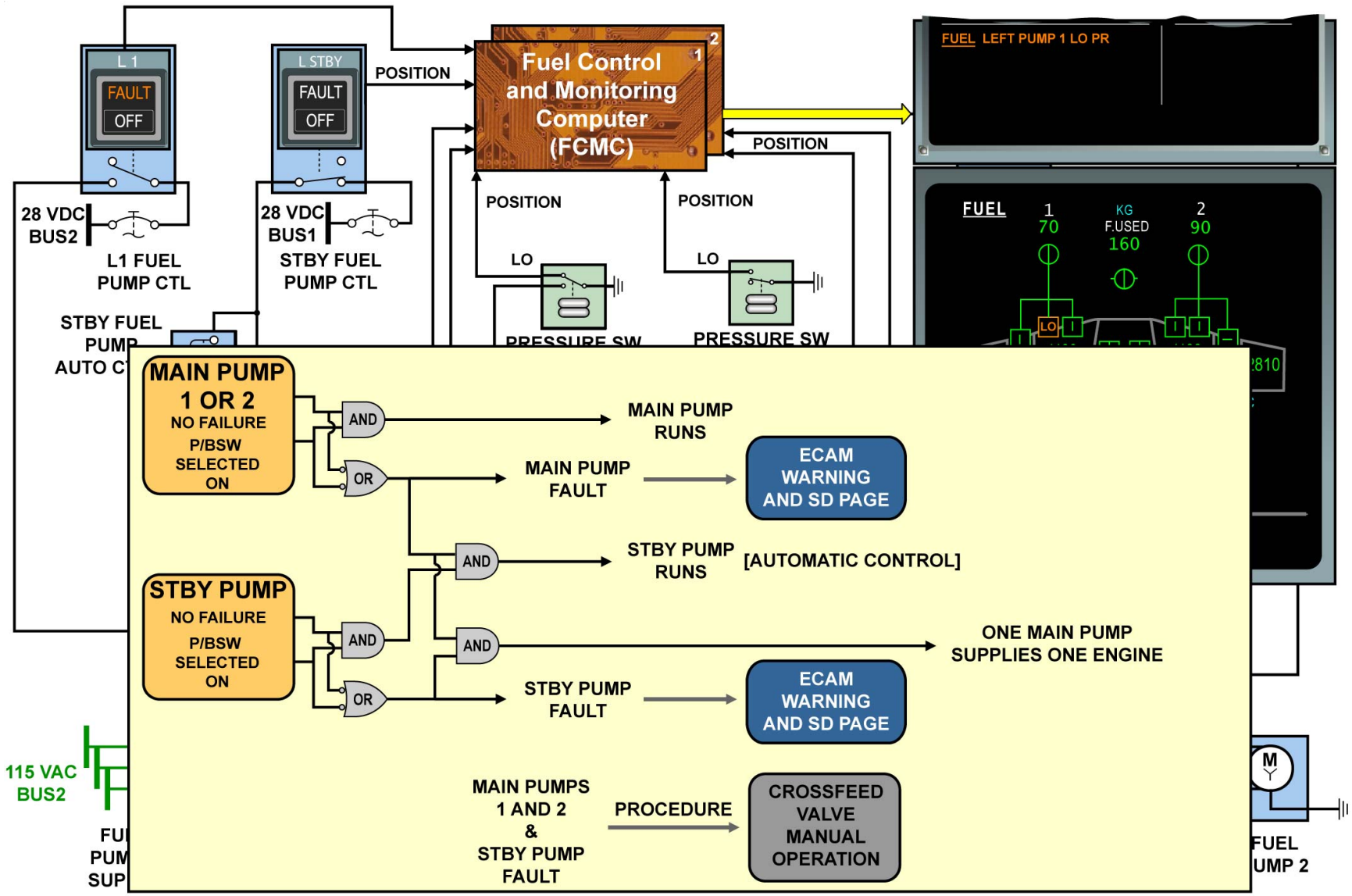

OPERATION - ENGINE FEED ABNORMAL OPERATION

G7508471 - G3NT1T0 - FM28D400000003

ENGINE FEED D/O (3)

OPERATION (continued)

LP VALVE OPERATION

There is one LP valve for each engine, and each engine has an equivalent circuit. Thus as each LP valve circuit is the same, only the operation of the No. 1 engine circuit is described here. Each actuator has two motors, which get their power supply from different sources:
- the 28 VDC ESS bus supplies motor 1,
- the 28 VDC bus 2 supplies motor 2.

The engine LP fuel shut-off system is controlled manually.
When the ENG 1 FIRE P/BSW is in and guarded, the ENG 1 MASTER switch selection to ON disconnect the 28VDC supply from the master switch slave ENG 1 relay. The relay de-energizes and connects a 28 VDC supply (through the ENG 1 FIRE P/BSW) to the LP valve actuator. The actuator then opens the LP valve.
When the No. 1 ENG MASTER switch is set to OFF, it connects a 28 VDC supply to the relay. The relay energizes and connects a 28 VDC supply through the ENG 1 FIRE P/BSW to the LP valve actuator. The actuator then closes the LP valve.

G7508471 - G3NT1T0 - FM28D400000003

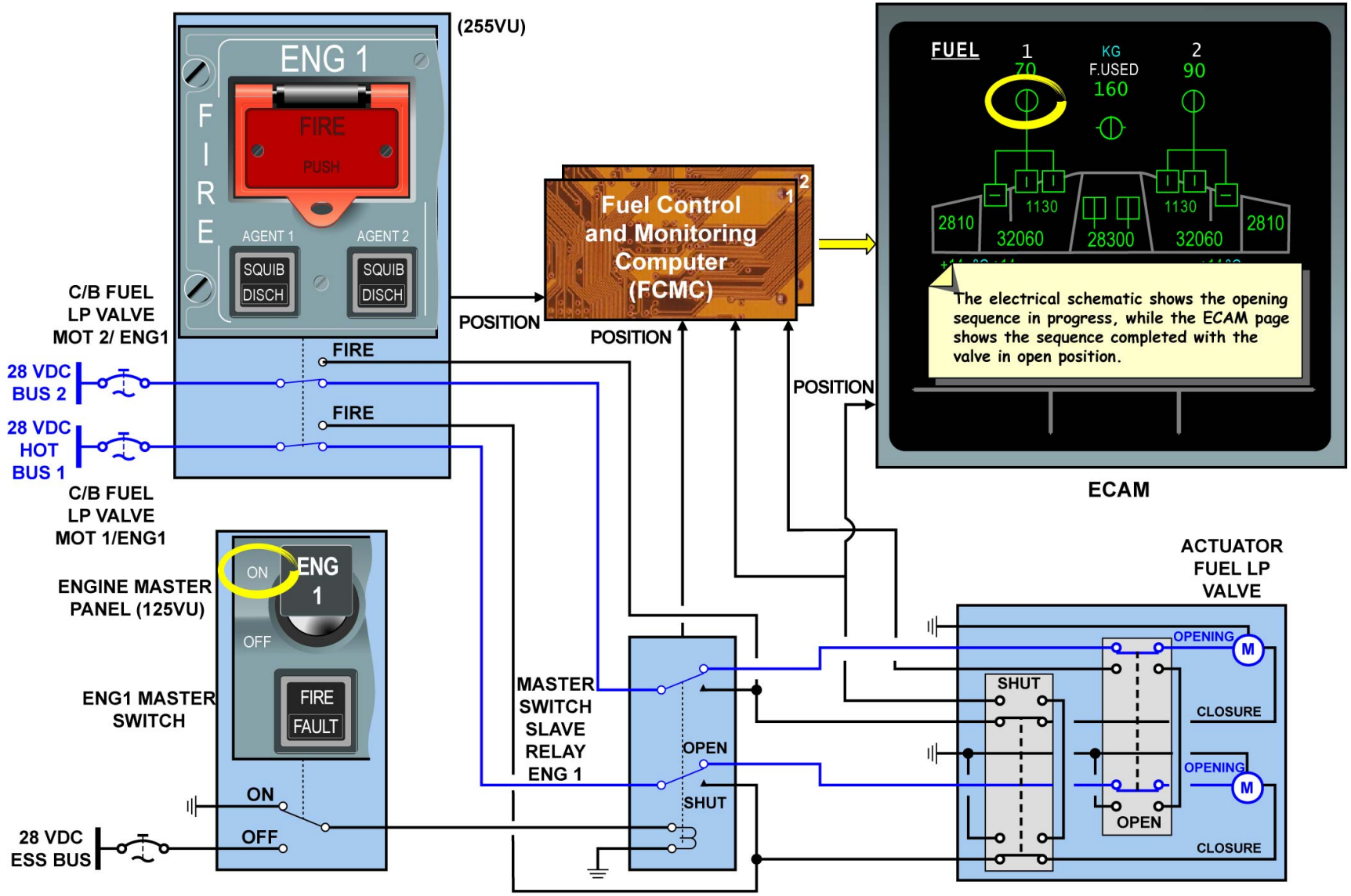

OPERATION - LP VALVE OPERATION

G7508471 - G3NT1T0 - FM28D400000003

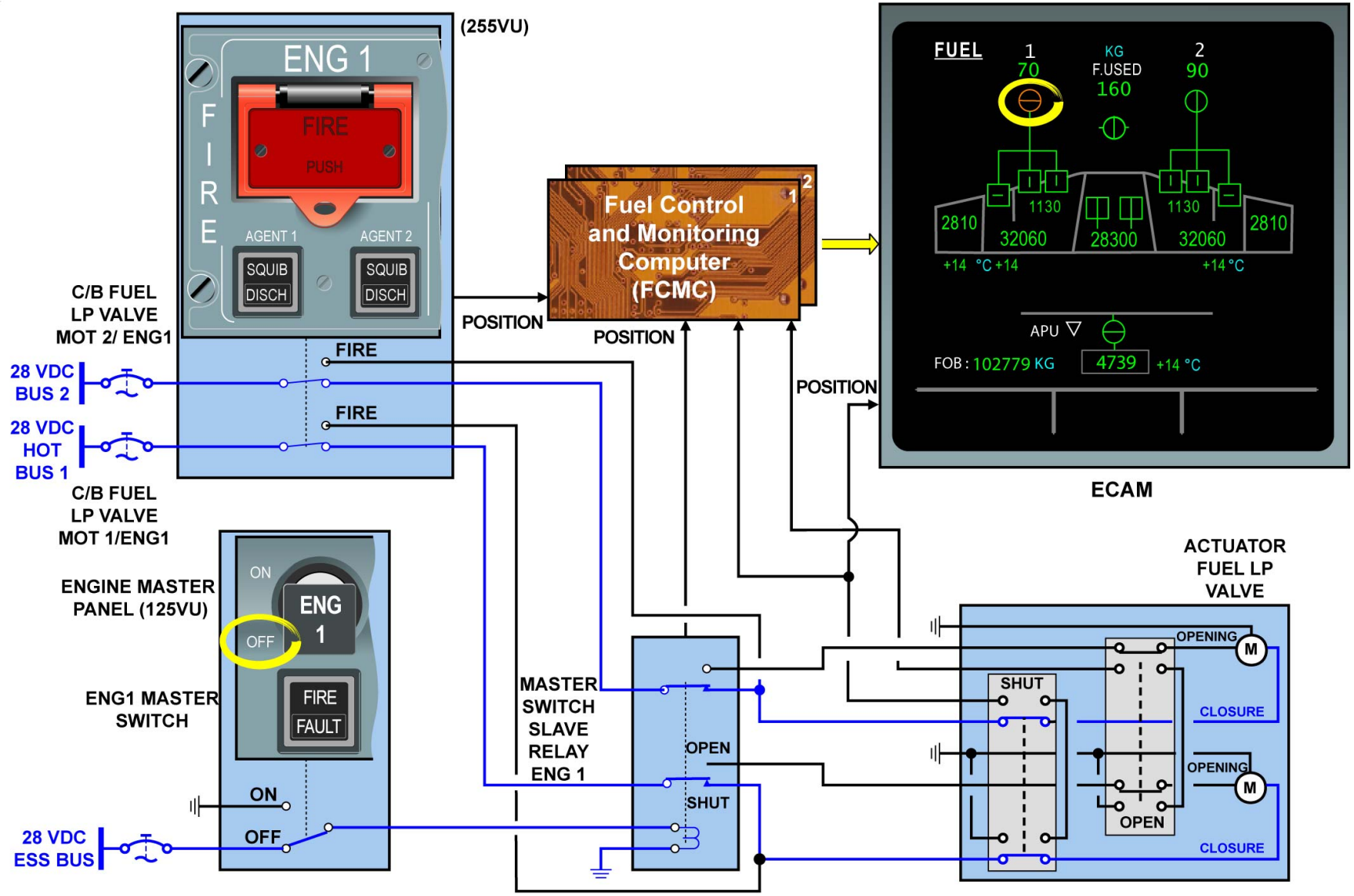

OPERATION - LP VALVE OPERATION

G7508471 - G3NT1T0 - FM28D400000003

This Page Intentionally Left Blank

G7508471 - G3NT1T0 - FM28D400000003

ENGINE FEED D/O (3)

OPERATION (continued)

LP VALVE OPERATION IN CASE OF ENGINE FIRE

If the ENG 1 FIRE P/BSW is released when the master switch is on:
- it disconnects the 28 VDC supply from the 'open' side of the actuator,
- it connects a 28 VDC supply to the 'close' side of the actuator, the LP valve moves to the closed position.

Operation of the ENG 1 FIRE P/BSW always overrides an ON selection and closes the valve.

G7508471 - G3NT1T0 - FM28D400000003

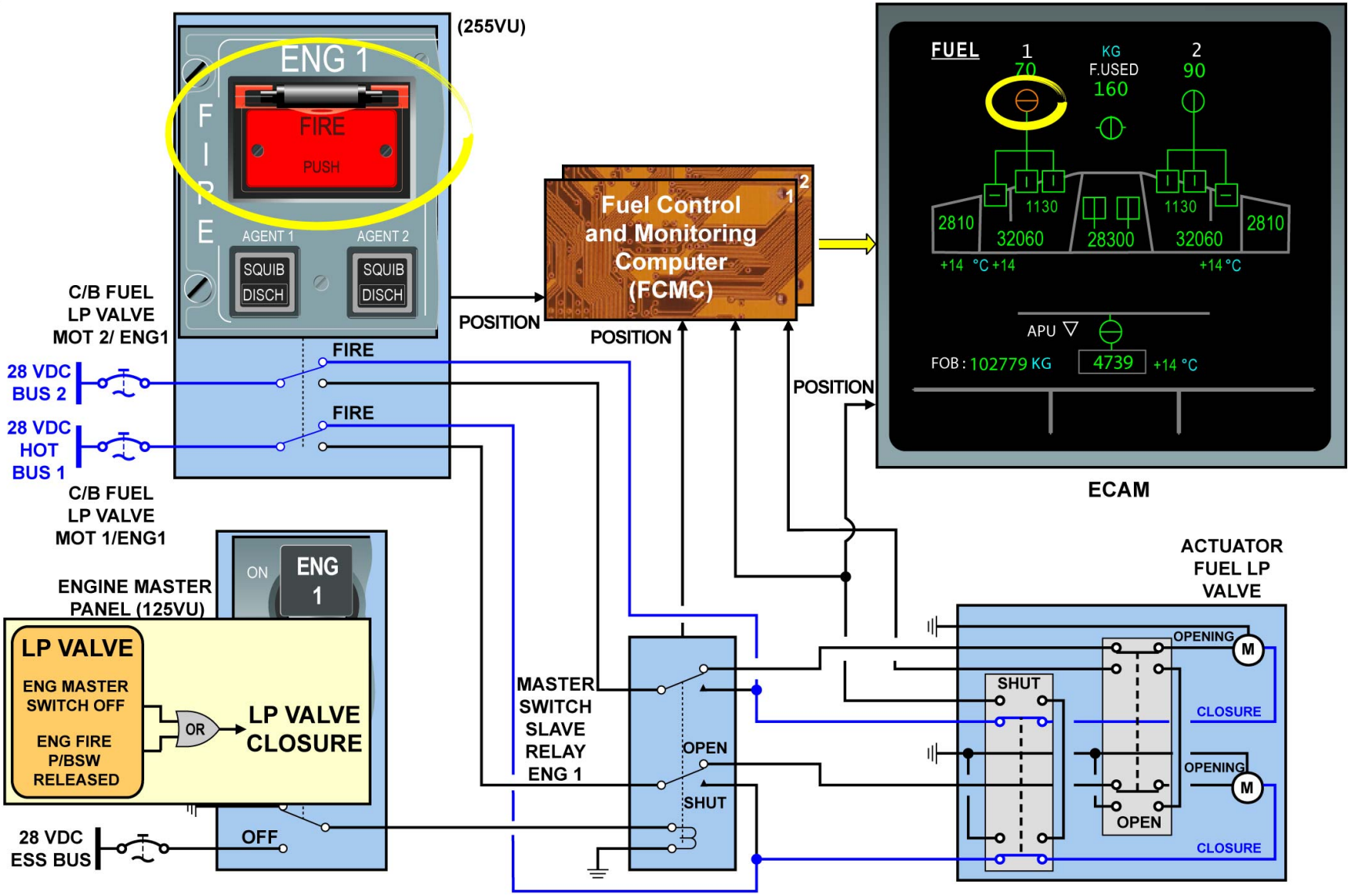

OPERATION - LP VALVE OPERATION IN CASE OF ENGINE FIRE

G7508471 - G3NT1T0 - FM28D400000003

ENGINE FEED D/O (3)

OPERATION (continued)

MANUAL CROSSFEED OPERATION

Following an ECAM warning, related to an engine pump system failure, manual crossfeed valve operation is requested by the procedure. The crossfeed valve has a dual motor actuator:
- motor 1 is supplied from 28 VDC ESS bus,
- motor 2 is supplied from 28 VDC NORM bus.

When the X FEED P/BSW is pushed in:
- the ON white light comes on in the P/B,
- the 28 VDC supply energizes the two electrical motors of the actuator,
- the crossfeed valve turns to the open position,
- the green OPEN light comes on, on the P/B,
- the crossfeed valve signal is shown open on the ECAM FUEL page.

When the same P/BSW is released out:
- on the P/B the ON and OPEN lights go off,
- the 28 VDC supply energizes the two electrical motors of the actuator,
- the crossfeed valve turns to the closed position,
- the crossfeed valve is shown closed on the ECAM FUEL.

The crossfeed valve P/B, X FEED CTL relay and actuator feedback discretes are sent to the FCMCs for indication, system status and fault reporting purposes.

G7508471 - G3NT1T0 - FM28D400000003

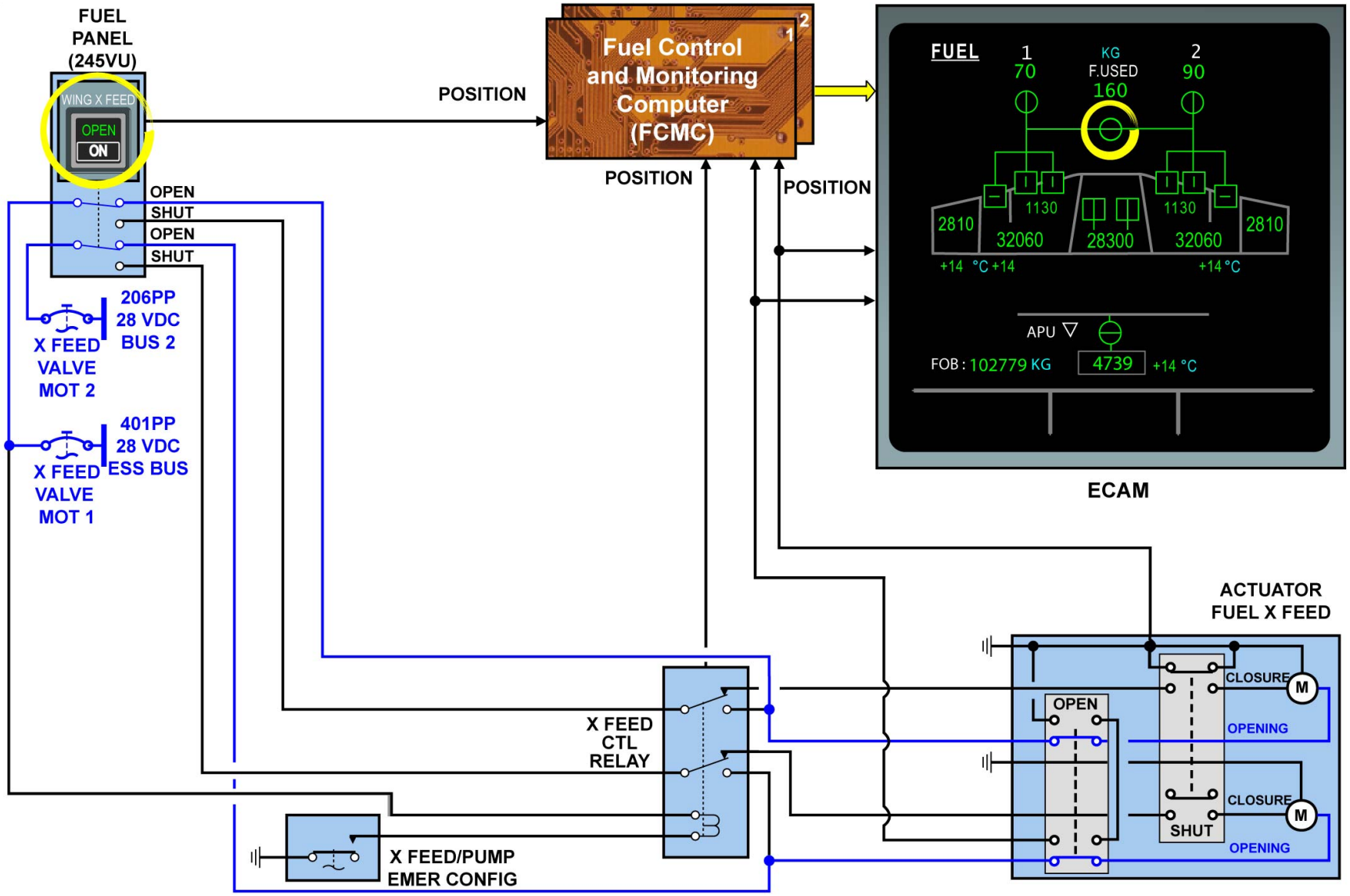

OPERATION - MANUAL CROSSFEED OPERATION

G7508471 - G3NT1T0 - FM28D400000003

ENGINE FEED D/O (3)

OPERATION (continued)

AUTOMATIC CROSSFEED OPERATION IN CASE OF EMERGENCY ELECTRICAL CONFIGURATION

The crossfeed valve opens automatically by relay logic control when the A/C is in an emergency electrical configuration, in order to supply any engine. The crossfeed valve can be also opened automatically while operating the jettison system (if installed).
In an emergency electrical configuration, only LH MAIN PUMP 2 (inboard pump) remains powered ON. RH MAIN PUMP 2 (inboard pump) remains in hot standby. It will be energized by relay logic if LH MAIN PUMP 2 is in LOW PRESS or if LH MAIN PUMP 2 PB/SW is selected OFF.
All the others pumps will be de-energized to save electrical power onboard.
During final approach in an emergency electrical configuration, flight crew will have to select the LAND RECOVERY PB/SW. This action will leave the crossfeed valve opened and de-energize all fuel pumps onboard (engine gravity feeding) until landing.

G7508471 - G3NT1T0 - FM28D400000003

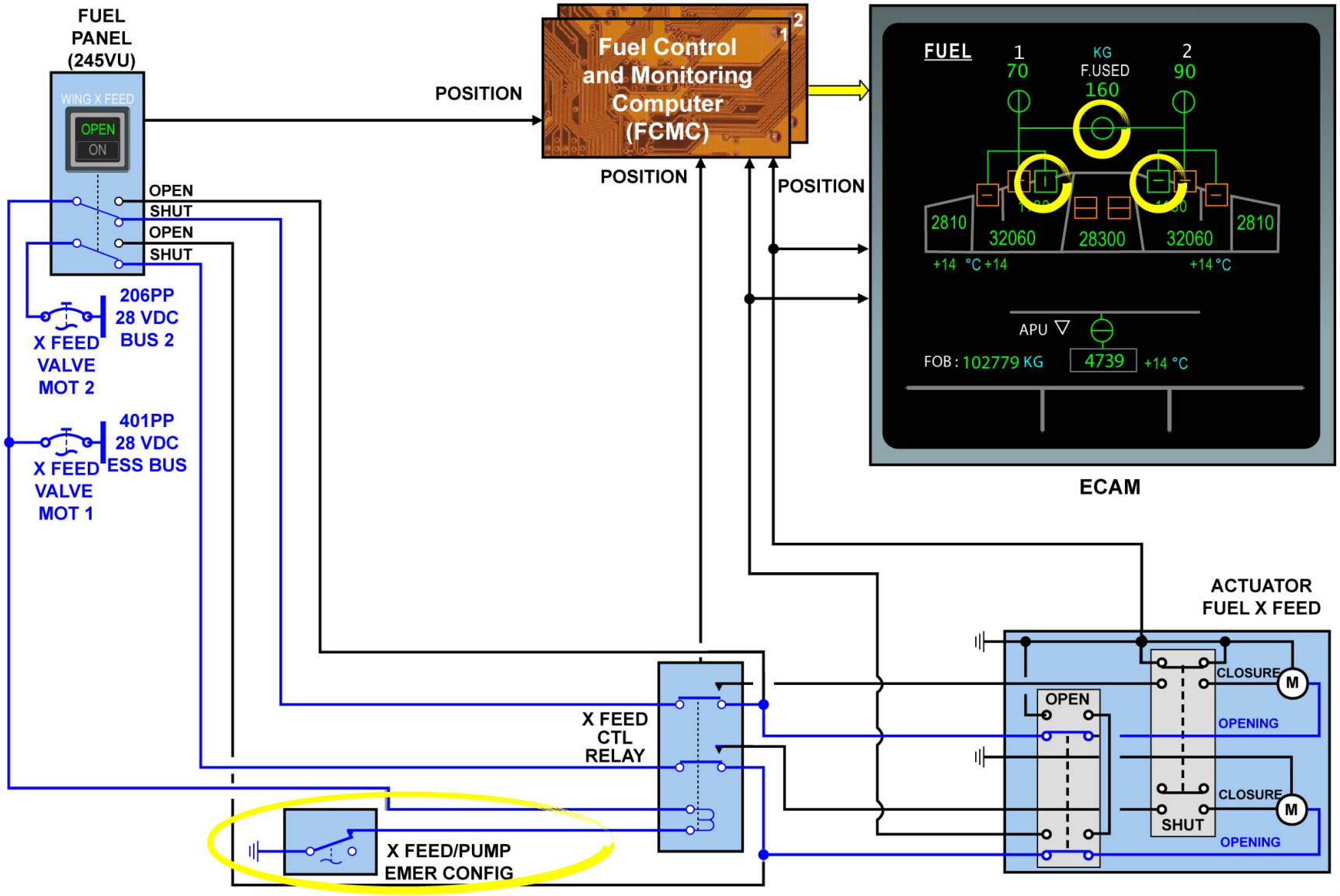

OPERATION - AUTOMATIC CROSSFEED OPERATION IN CASE OF EMERGENCY ELECTRICAL CONFIGURATION

G7508471 - G3NT1T0 - FM28D400000003

APU FEED D/O (3)

GENERAL

The APU fuel pump system supplies the necessary fuel to operate the APU in all operating conditions. The fuel is supplied to the APU from the LH inner tank through the trim tank transfer line with the FWD APU pump when the trim tank fuel transfer system does not operate. The aft APU pump runs when the trim tank fuel transfer system operates. A fuel isolation valve and an LP fuel shut-off valve control the fuel flow to the APU.

G7508471 - G3NT1T0 - FM28D500000003

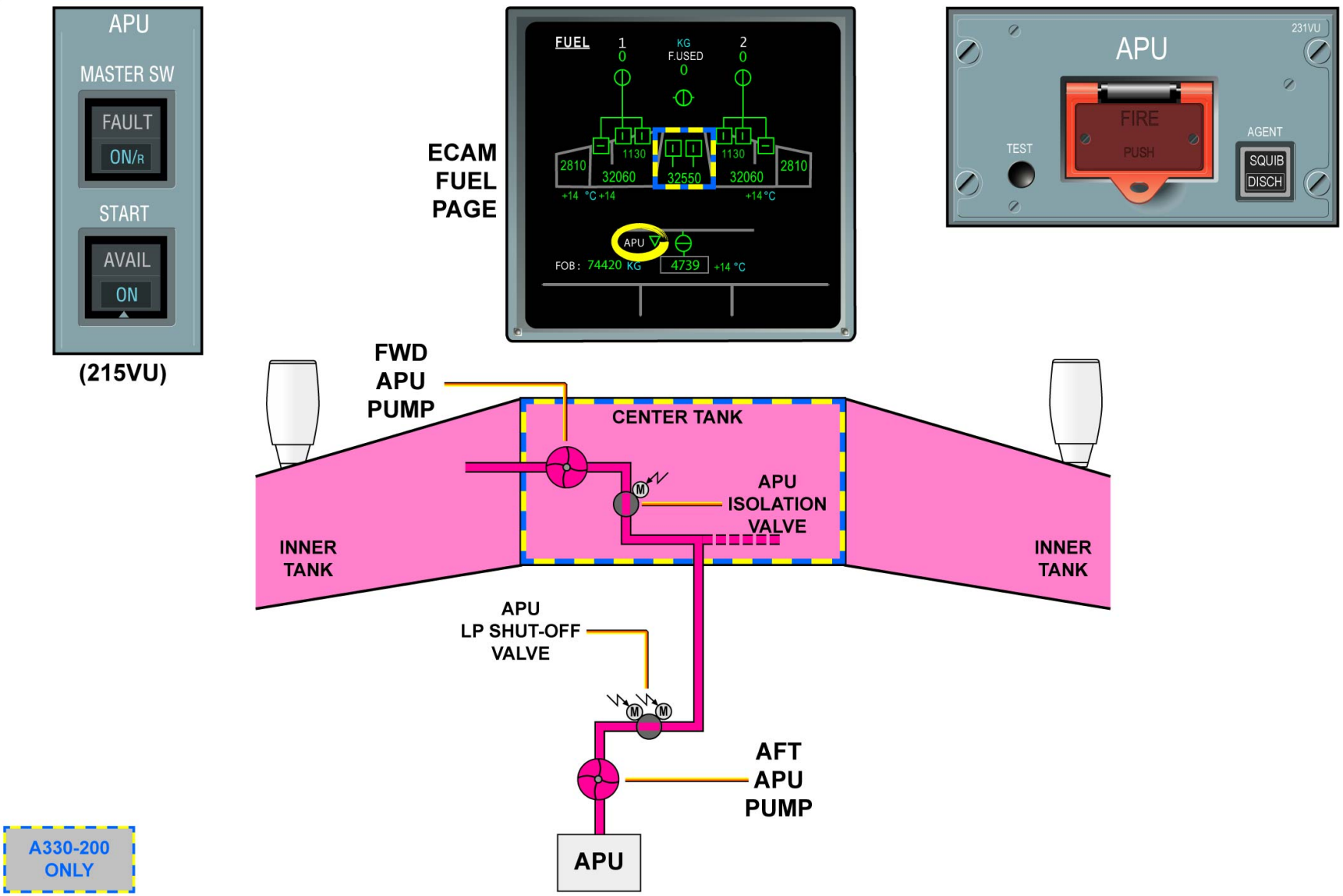

GENERAL

G7508471 - G3NT1T0 - FM28D500000003

APU FEED D/O (3)

DESCRIPTION

Here is a detailed description of the APU feed system.

FUEL FEED LINE

A double shrouded tube system extends along the trim transfer line and the APU fuel line. A venting outlet connected to the fuselage skin next to frame 95, allows any leaking fuel to drain at the lowest end through the drain mast. There is also the APU fuel line vent and drain valve, between APU and aft APU pump.

APU FUEL FEED PUMPS

The FWD APU fuel feed pump is installed on the rear spar of the wing center section. The pump is of the centrifugal type and is driven by a 115V AC single-phase motor, supplied from the NORM BUS. The pump can supply 288 kg/h (635 lbs/h) at a pressure increase of 1.2 bar (17.4 PSI). The operation of the pump is fully automatic.
The aft APU fuel feed pump is installed in the THS compartment. It is a vane type pump with a single-phase 115V AC motor, supplied from the STATIC INV BUS A. The pump is self-priming with sufficient capacity to cope with released air.

FUEL/AIR SEPARATOR

The fuel/air separator is installed in the THS compartment, at the junction between the APU fuel feed line and the trim tank. It keeps sufficient fuel for APU operation if air enters the transfer line.

PRESSURE SWITCH

The fuel pressure switch is installed on the fuel/air separator. It closes when the absolute pressure in the fuel/air separator is less than 22 PSI. Consequently the aft APU pump is energized through a relay logic.

VENT P/BSW

At the FWD firewall of the APU compartment is a vent P/BSW. It is used for the line maintenance to examine or to refuel the APU fuel system.

APU FUEL ISOLATION VALVE AND ACTUATOR

The fuel isolation valve is installed in the wing center section rear spar and controls fuel flow from the LH inner tank to the trim tank fuel transfer line. The valve position is monitored by the FCMCs.

APU LP SHUT-OFF VALVE

The APU LP shut-off valve is installed in the APU fuel line between the fuel/air separator and the aft fuel feed pump. The valve position is monitored by the FCMCs.

G7508471 - G3NT1T0 - FM28D500000003

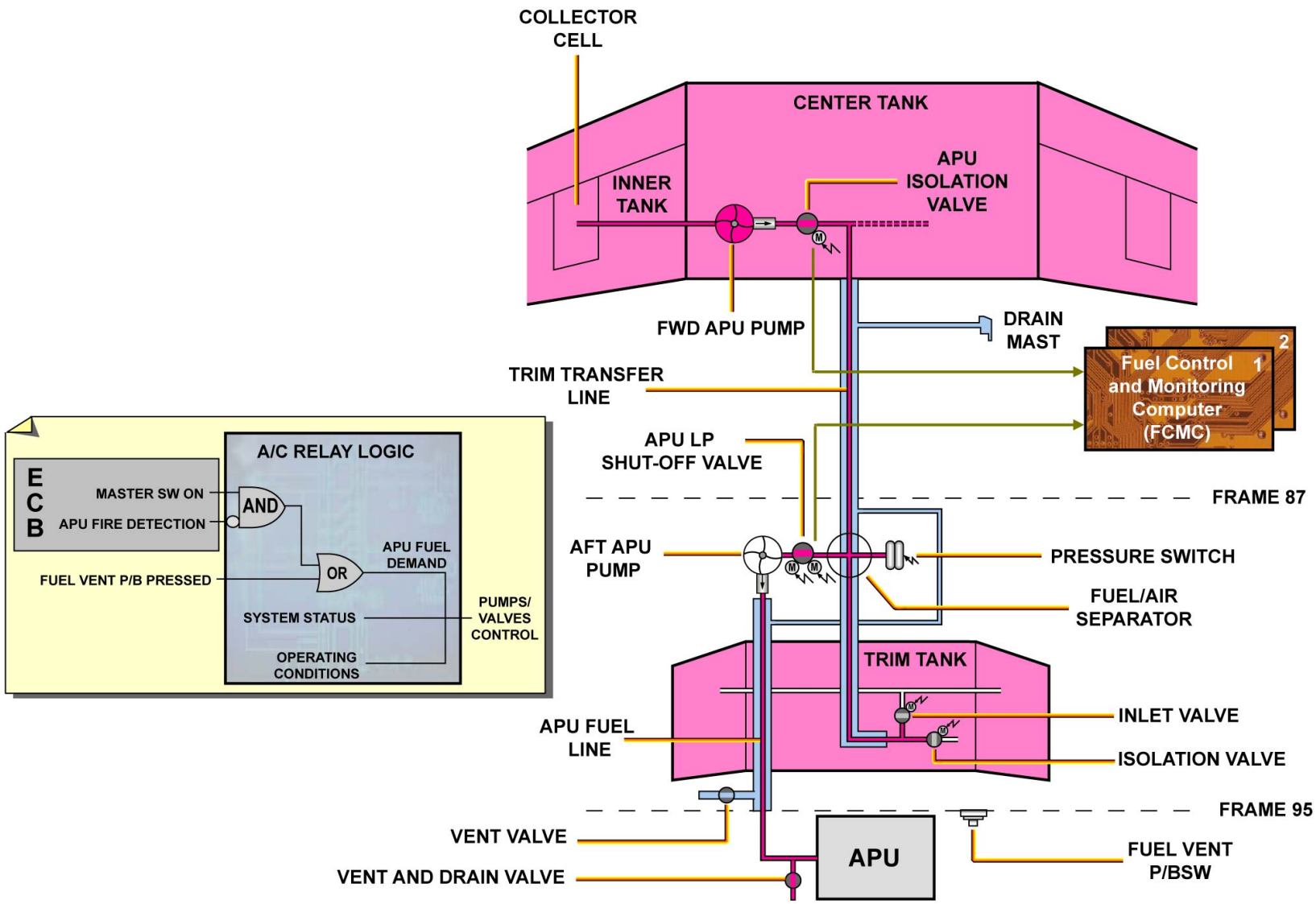

DESCRIPTION - FUEL FEED LINE ... APU LP SHUT-OFF VALVE

G7508471 - G3NT1T0 - FM28D500000003

APU FEED D/O (3)

OPERATION

The following information is a detailed description of the APU feed normal operation, shutdown operation, emergency shut-off operation, and the fuel line purging.

APU FEED NORMAL OPERATION

When the APU operates, the Electronic Control Box (ECB) opens the LP fuel shut-off valve and the isolation valve. It energizes the forward APU pump, which supplies the fuel to the APU fuel system. To check the operation of the aft APU pump during APU start sequence, a 2-minutes time delay relay prevents the operation of the forward APU pump, resulting in a low pressure condition in the line and the automatic switching to the aft APU pump through a relay logic.
If the pressure switch detects a low-pressure condition, it starts the aft pump which then supplies the fuel from the fuel/air separator to the APU.

G7508471 - G3NT1T0 - FM28D500000003

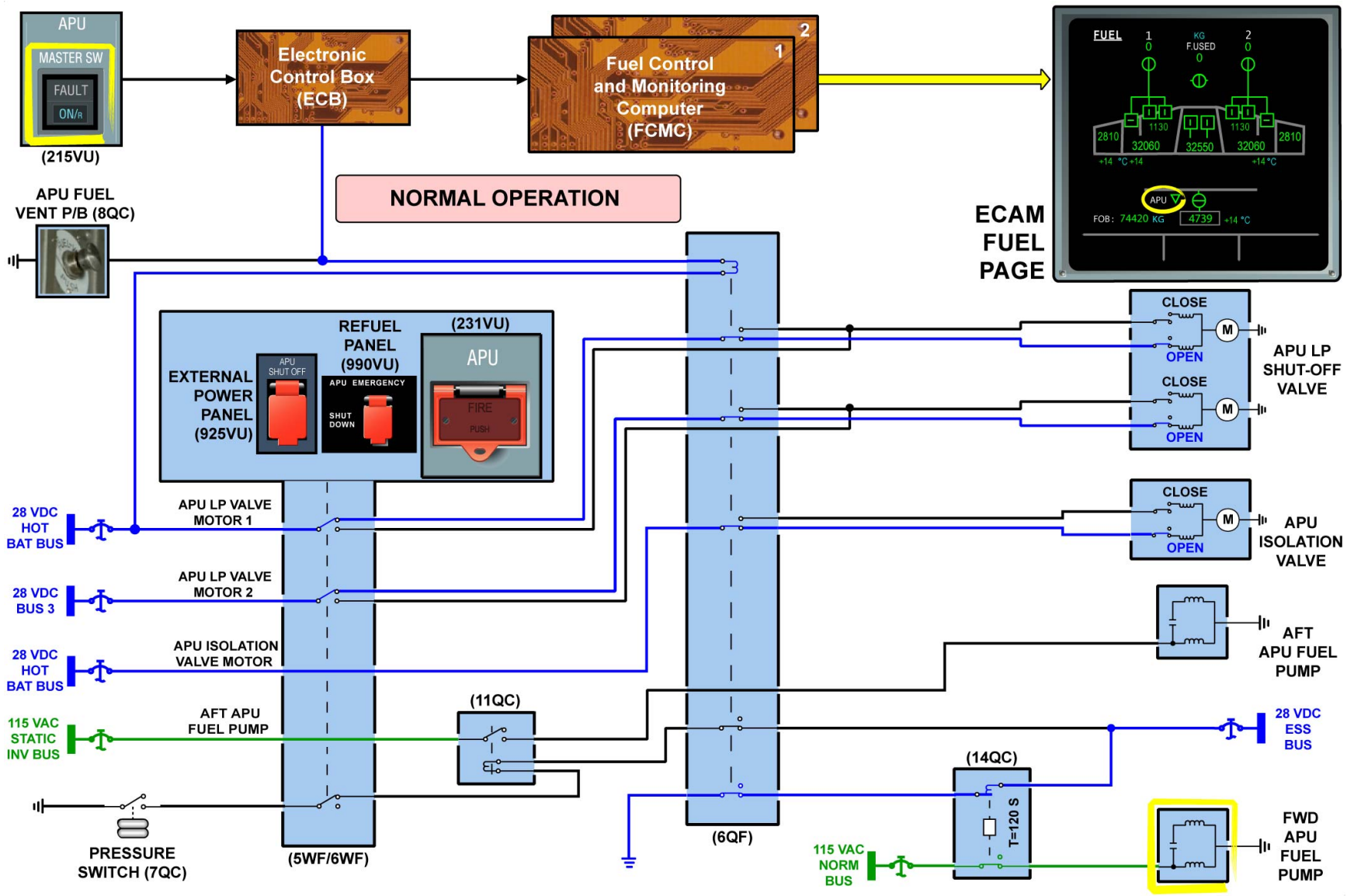

OPERATION - APU FEED NORMAL OPERATION

G7508471 - G3NT1T0 - FM28D500000003

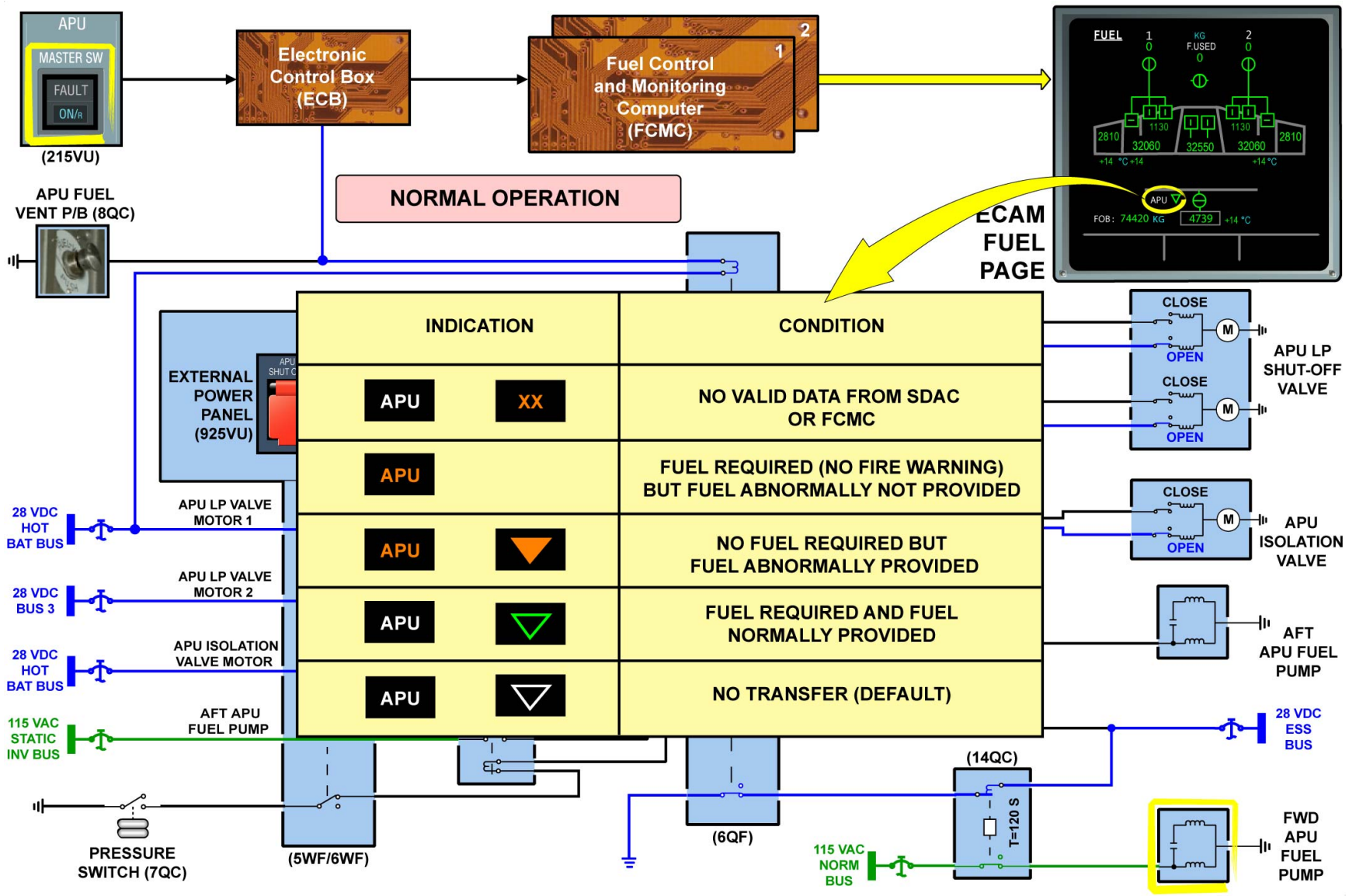

OPERATION - APU FEED NORMAL OPERATION

G7508471 - G3NT1T0 - FM28D500000003

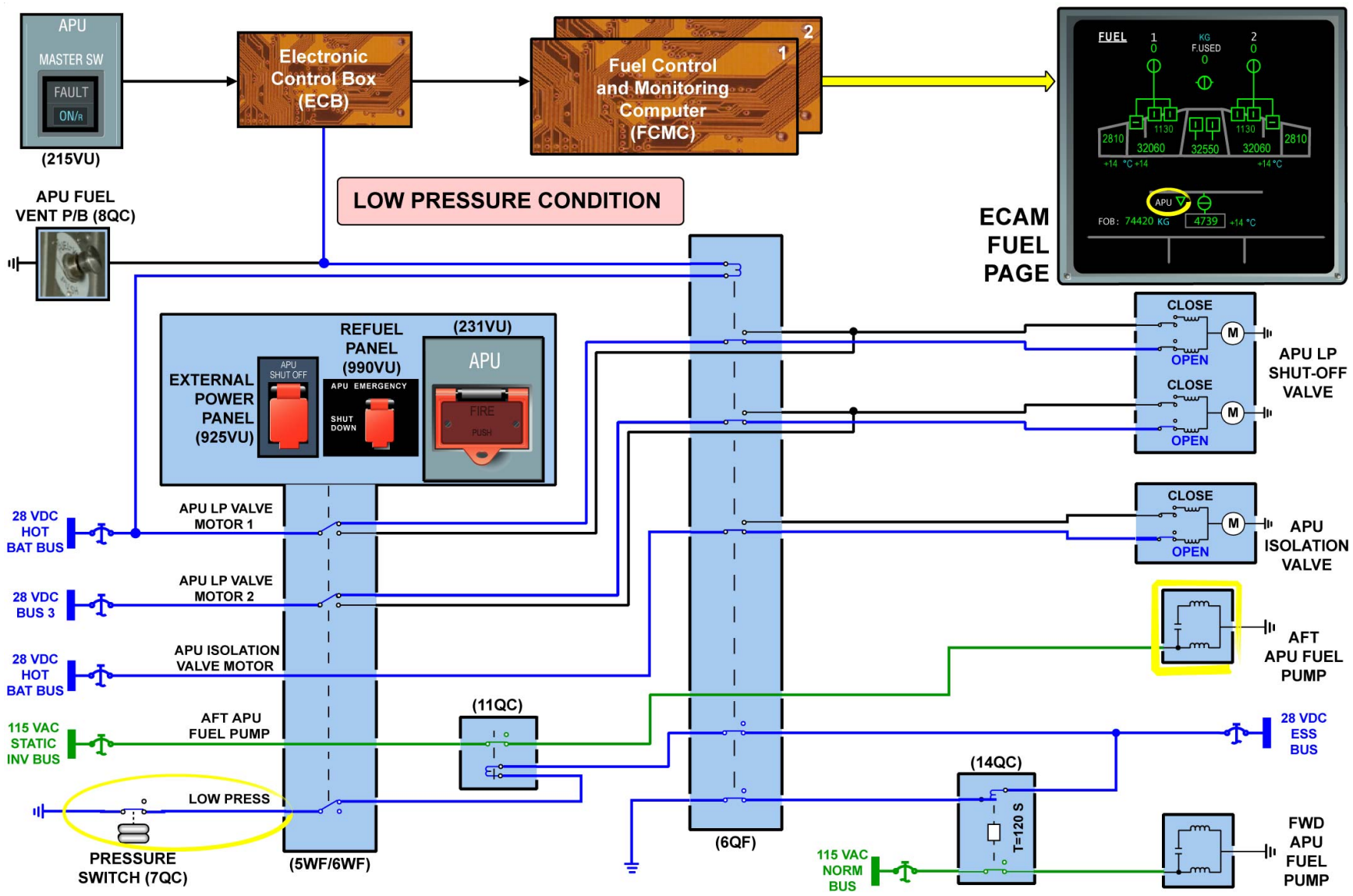

OPERATION - APU FEED NORMAL OPERATION

G7508471 - G3NT1T0 - FM28D500000003

APU FEED D/O (3)

OPERATION (continued)

APU SHUTDOWN OPERATION

When the APU shuts down, the ECB closes the APU fuel isolation valve and APU LP fuel shut-off valve and de-energizes the FWD and aft APU fuel pumps.

G7508471 - G3NT1T0 - FM28D500000003

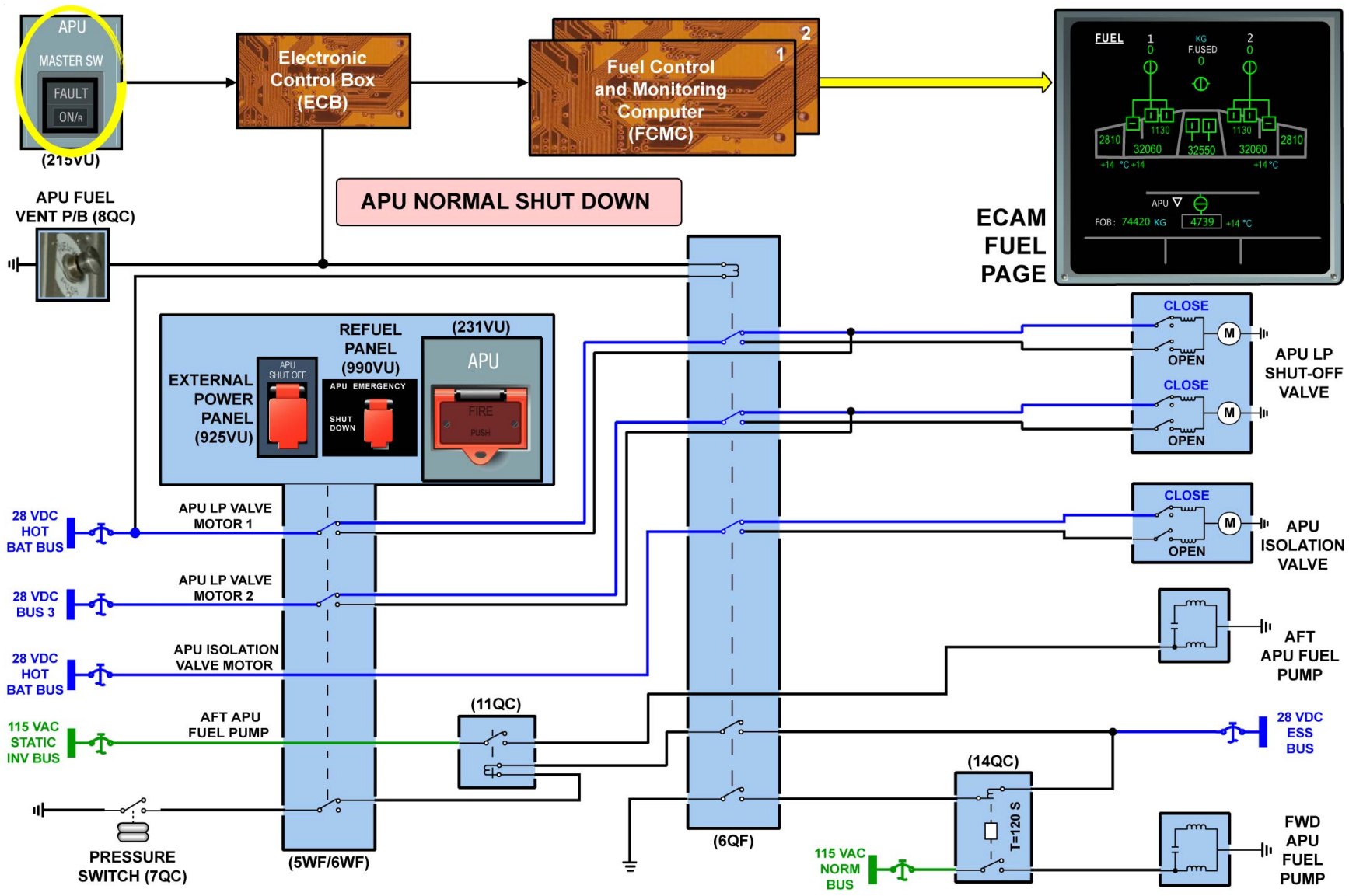

OPERATION - APU SHUTDOWN OPERATION

G7508471 - G3NT1T0 - FM28D500000003

APU FEED D/O (3)

OPERATION (continued)

APU EMERGENCY SHUT-OFF OPERATION

A manual emergency APU fuel supply isolation will be done if:
- the APU FIRE P/B is released following an APU fire procedure,
- the APU EMERGENCY SHUT-DOWN P/B is pressed on the refuel/defuel panel on ground,
- the APU SHUT-OFF P/B is pressed on the external power panel on ground.

G7508471 - G3NT1T0 - FM28D500000003

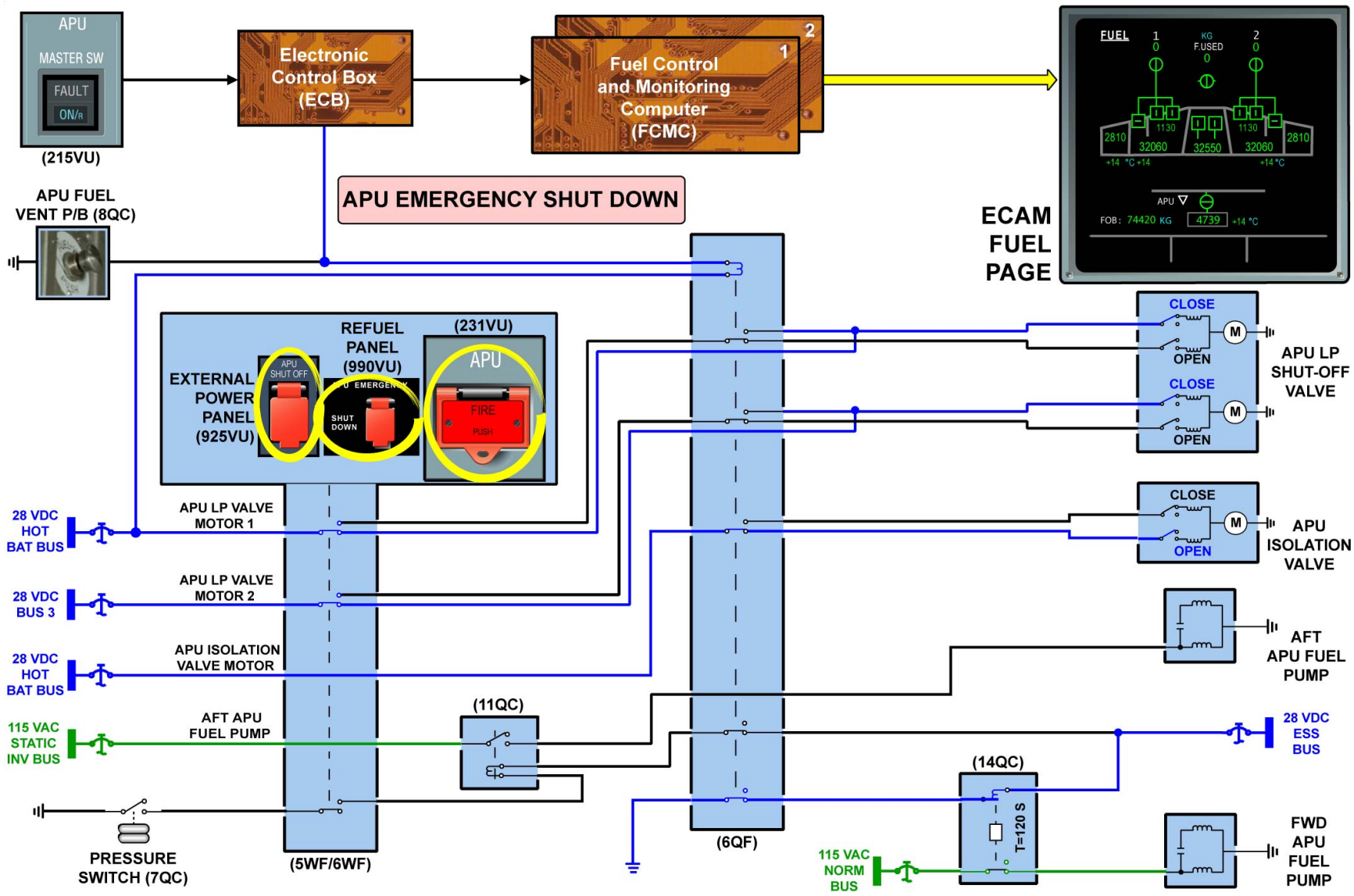

OPERATION - APU EMERGENCY SHUT-OFF OPERATION

G7508471 - G3NT1T0 - FM28D500000003

APU FEED D/O (3)

OPERATION (continued)

APU FUEL LINE PURGING

By pressing and holding the APU fuel line vent P/B in the APU compartment, the APU fuel feed system will be controlled in the same way as the APU MASTER SWitch selection does. This function is used by line maintenance to drain or bleed the APU fuel line. For this procedure we have to use a special vent adapter.

G7508471 - G3NT1T0 - FM28D500000003

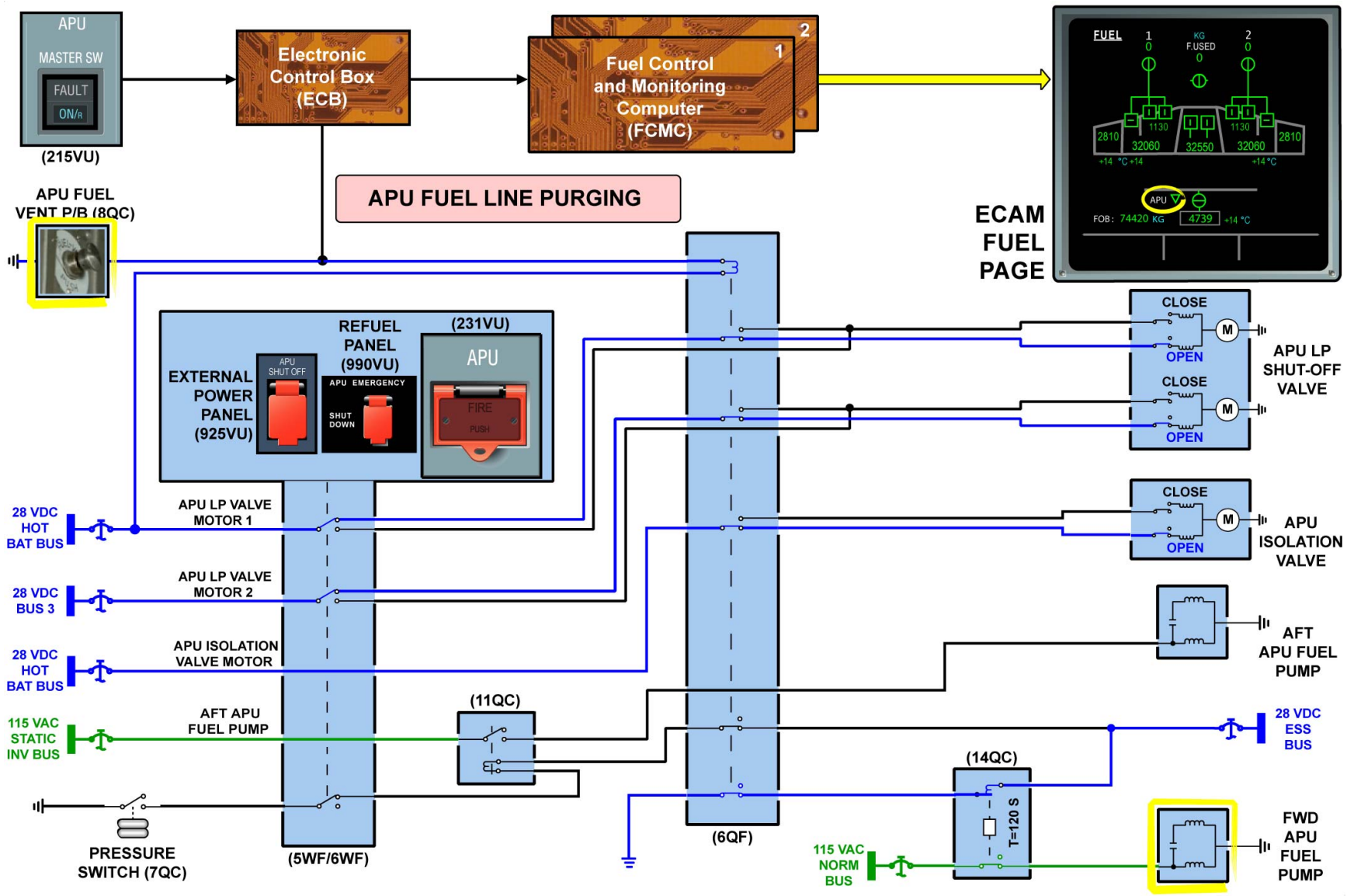

OPERATION - APU FUEL LINE PURGING

G7508471 - G3NT1T0 - FM28D500000003

MAIN TRANSFER D/O (A330-200)

GENERAL

The main transfer is automatically controlled by the Fuel Control and Monitoring Computers (FCMCs) but if necessary, the crew can manually override it from the cockpit FUEL panel. It controls the fuel flow from the center and the outer tanks to the two inner tanks. A fuel transfer system involves two steps:
- step 1: center tank to inner tanks, provided there is fuel in the center tank,
- step 2: outer tanks to inner tanks, when the related inner fuel content decreases to a specified level.
The operations are displayed on the ECAM FUEL page.

G7508471 - G3NT1T0 - FM28D600000003

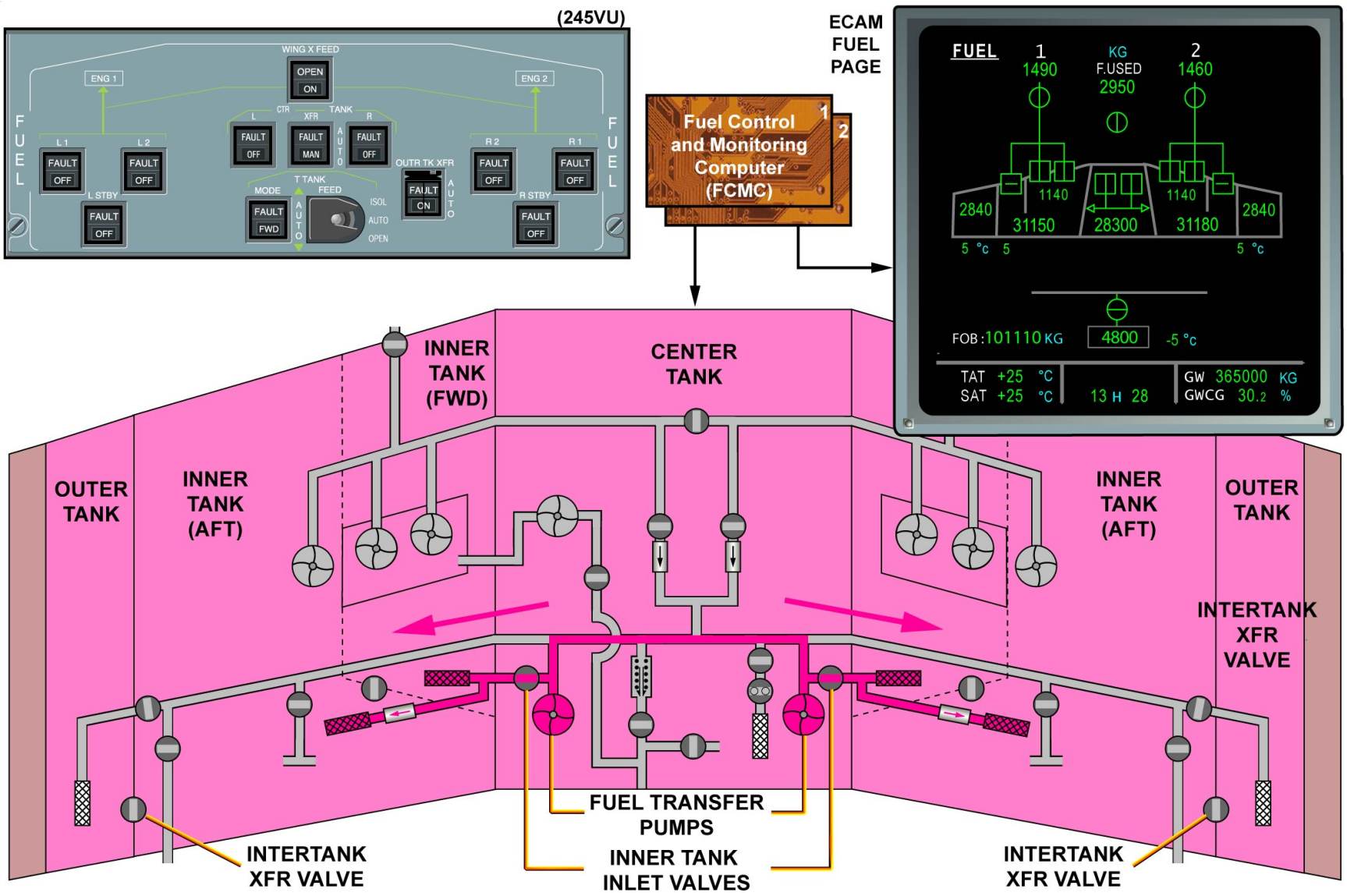
(245VU)
WING X FEED
OPEN
ON
ENG 1
ENG 2
CTR TANK
L XFR R
FAULT OFF
FAULT MAN
FAULT OFF
AUTO
OUTR TK XFR
FAULT ON
T TANK
MODE FEED
FAULT FWD
ISOL
AUTO
OPEN
L 1
L 2
L STBY
R 2
R 1
R STBY
FUEL
ECAM
FUEL
PAGE
FUEL
1
1490
KG
F.USED
2950
2
1460
2840
31150
1140
28300
1140
31180
2840
5 °c 5
5 °c
FOB :101110 KG
4800
-5 °c
TAT +25 °C
SAT +25 °C
13 H 28
GW 365000 KG
GWCG 30.2 %
Fuel Control
and Monitoring
Computer
(FCMC)
1
2
INNER
TANK
(FWD)
CENTER
TANK
OUTER
TANK
INNER
TANK
(AFT)
INNER
TANK
(AFT)
OUTER
TANK
INTERTANK
XFR
VALVE
FUEL TRANSFER
PUMPS
INNER TANK
INLET VALVES
INTERTANK
XFR VALVE
INTERTANK
XFR VALVE

GENERAL

MAIN TRANSFER D/O (A330-200)

DESCRIPTION

This topic describes the components of the main transfer.

FUEL TRANSFER PUMP AND CANISTER

Two centrifugal type fuel transfer pumps are installed in the bottom of the center tank, so that almost all of the fuel can be transferred when necessary. Each pump is driven by a 3-phase 115 VAC motor and is enclosed in a canister that makes it possible to replace the fuel pump element when there is fuel in the center tank. Pumps and canisters are all assembled in the same way and are interchangeable.

TRANSFER CHECK VALVES

The outlet pipe from each fuel transfer pump contains a check valve. This prevents an opposite fuel flow through the pump when it is not in operation.

PRESSURE SWITCHES

Each center tank transfer fuel pump has an output monitoring LP switch attached to the rear spar of the center box. It operates at 6 psi depending on pressure decrease.

INNER TANK INLET VALVES AND ACTUATORS

The inner tank inlet valves, of the ball-valve type, are installed in the fuel supply line of each inner tank. They independently control the flow of fuel from the refuel gallery to the inner tanks. The valves are installed in the center tank and have a spindle which goes through the rear spar to engage with the actuator. The actuator is a single electrical motor and is equipped with a visual position indicator.

INTER-TANK TRANSFER VALVES AND ACTUATORS

Inter-tank transfer valves, of the ball-valve type, are installed in the inner tanks and supply the fuel from the outer tanks to the inner tanks. They are operated by a single electrical motor actuator attached to the wing front spar and equipped with a visual position indicator.

OUTER TANK INLET VALVES AND ACTUATORS

Each outer tank inlet valve is an interface between the refuel gallery and the outer tank. Its primary function is to control the flow of fuel into the outer tank. However, during suction defuel or transfer it controls the fuel flow out of the outer tank.

G7508471 - G3NT1T0 - FM28D600000003

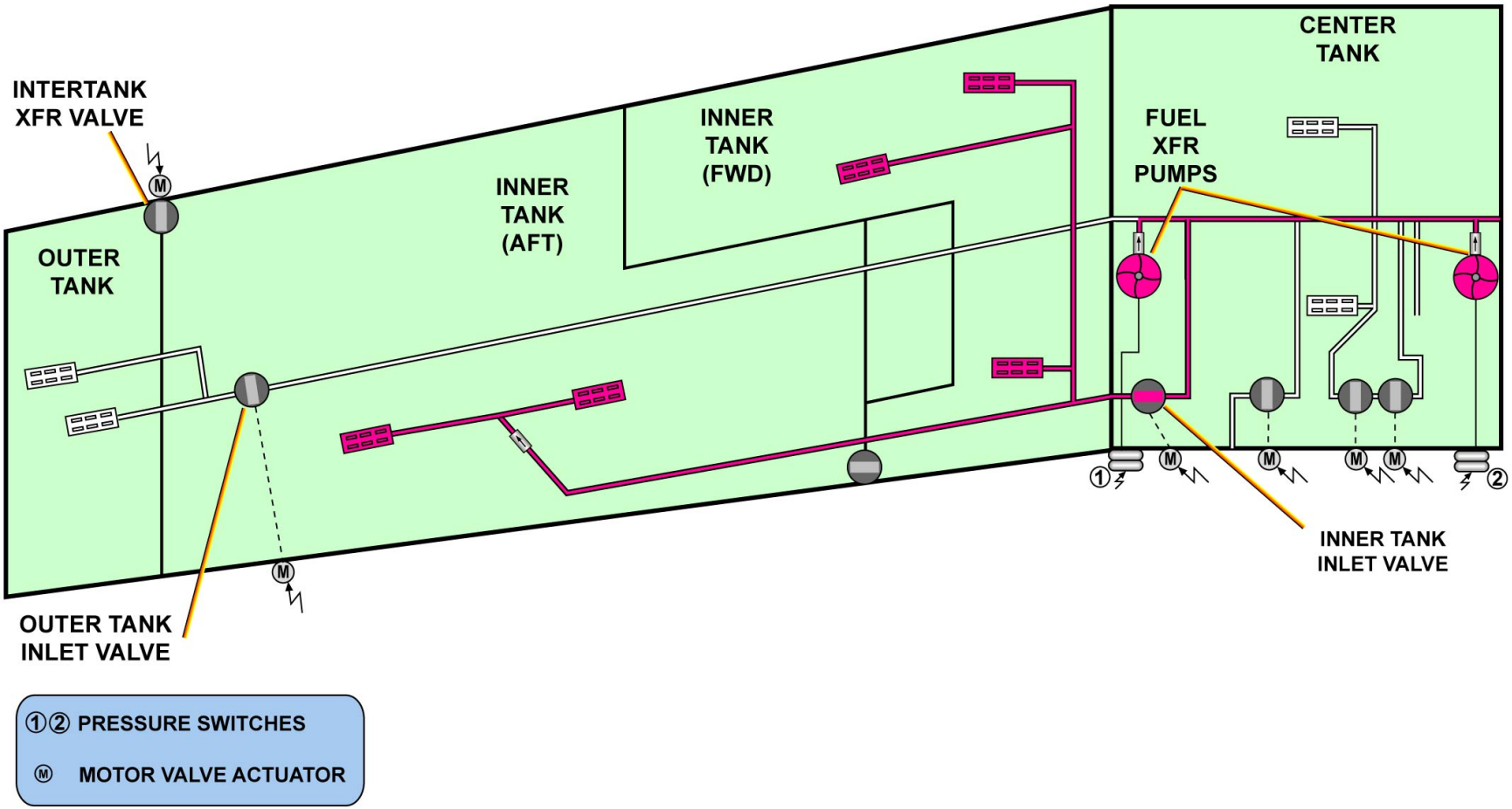

DESCRIPTION - FUEL TRANSFER PUMP AND CANISTER ... OUTER TANK INLET VALVES AND ACTUATORS

G7508471 - G3NT1T0 - FM28D600000003

MAIN TRANSFER D/O (A330-200)

OPERATION

This topic describes how the main transfer operates.

AUTOMATIC TRANSFER: CENTER TANK TO INNER TANKS

The system uses fuel pump pressure to move fuel from the center tank to the inner tanks.
When the L and R CTR TANK XFR P/Bs are on, the center tank transfer pumps are controlled by the master FCMC to run, provided the center tank contains fuel and the CTR TANK XFR P/Bs are not in the MANual position. The two transfer pumps then operate continuously until the center tank is empty.
Depending on the center tank and inner tank quantities, the FCMC will start center tank to inner tank transfers by controlling the related inner tank inlet valves. One center tank transfer pump selected and operative is sufficient to do a center tank to inner tank transfer.

G7508471 - G3NT1T0 - FM28D600000003

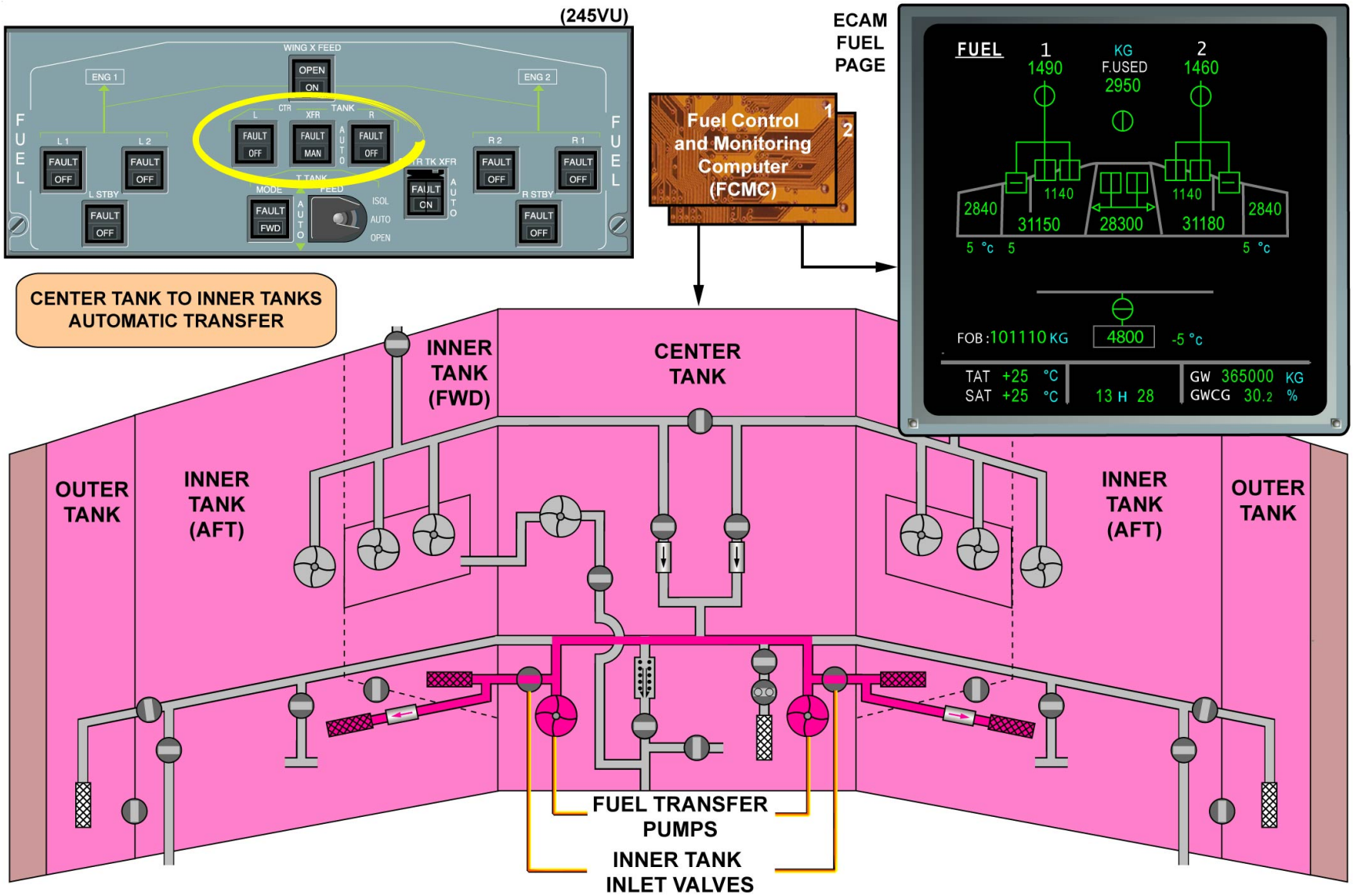

OPERATION - AUTOMATIC TRANSFER: CENTER TANK TO INNER TANKS

G7508471 - G3NT1T0 - FM28D600000003

MAIN TRANSFER D/O (A330-200)

OPERATION (continued)

CENTER TANK TO INNER TANKS TRANSFER LOGIC

When the fuel content of the inner tanks decreases to underfull (approximately 2000 kg below the hi-level), the Fuel Quantity Indicating (FQI) sends a signal to the FCMC which opens the inner tank inlet valves and starts the center tank to inner tank transfer. When the hi-level in the inner tanks becomes wet, the transfer stops. When the fuel content of the inner tanks decreases to underfull, the center tank to inner tank transfer restarts. This start-and-stop cycle continues until the center tank is empty, the low level is dry and the pumps are at Low Pressure (LP). The FCMC then:
- de-energizes both transfer pumps,
- closes both inner tank inlet valves.

The following process determines whether the center tank is empty:
- when the center tank quantity is low and Low Pressure (LP) is detected in both center tank transfer pumps for more than 5 minutes, the FCMC stops the pumps and closes the inner tank inlet valves.

G7508471 - G3NT1T0 - FM28D600000003

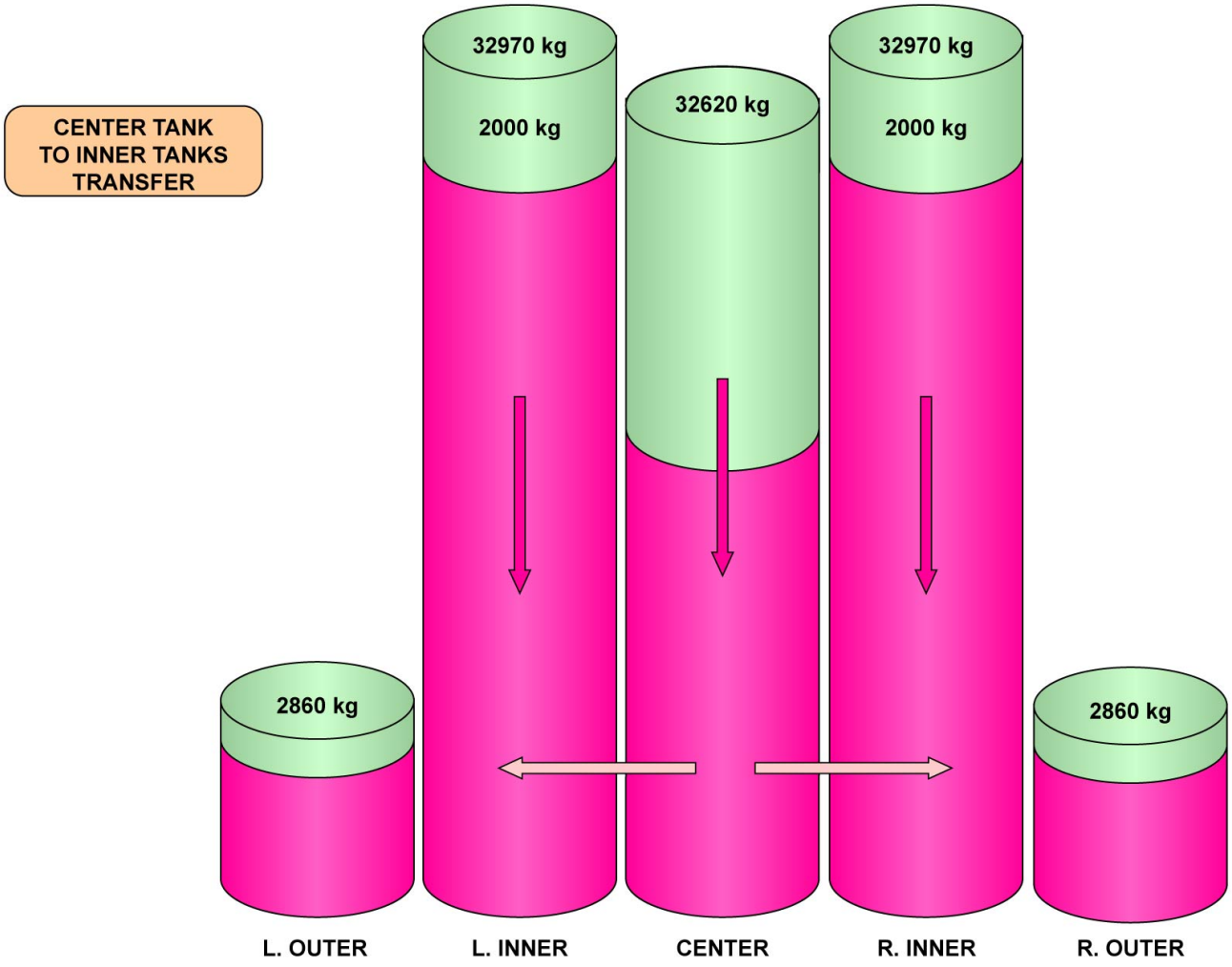

OPERATION - CENTER TANK TO INNER TANKS TRANSFER LOGIC

G7508471 - G3NT1T0 - FM28D600000003

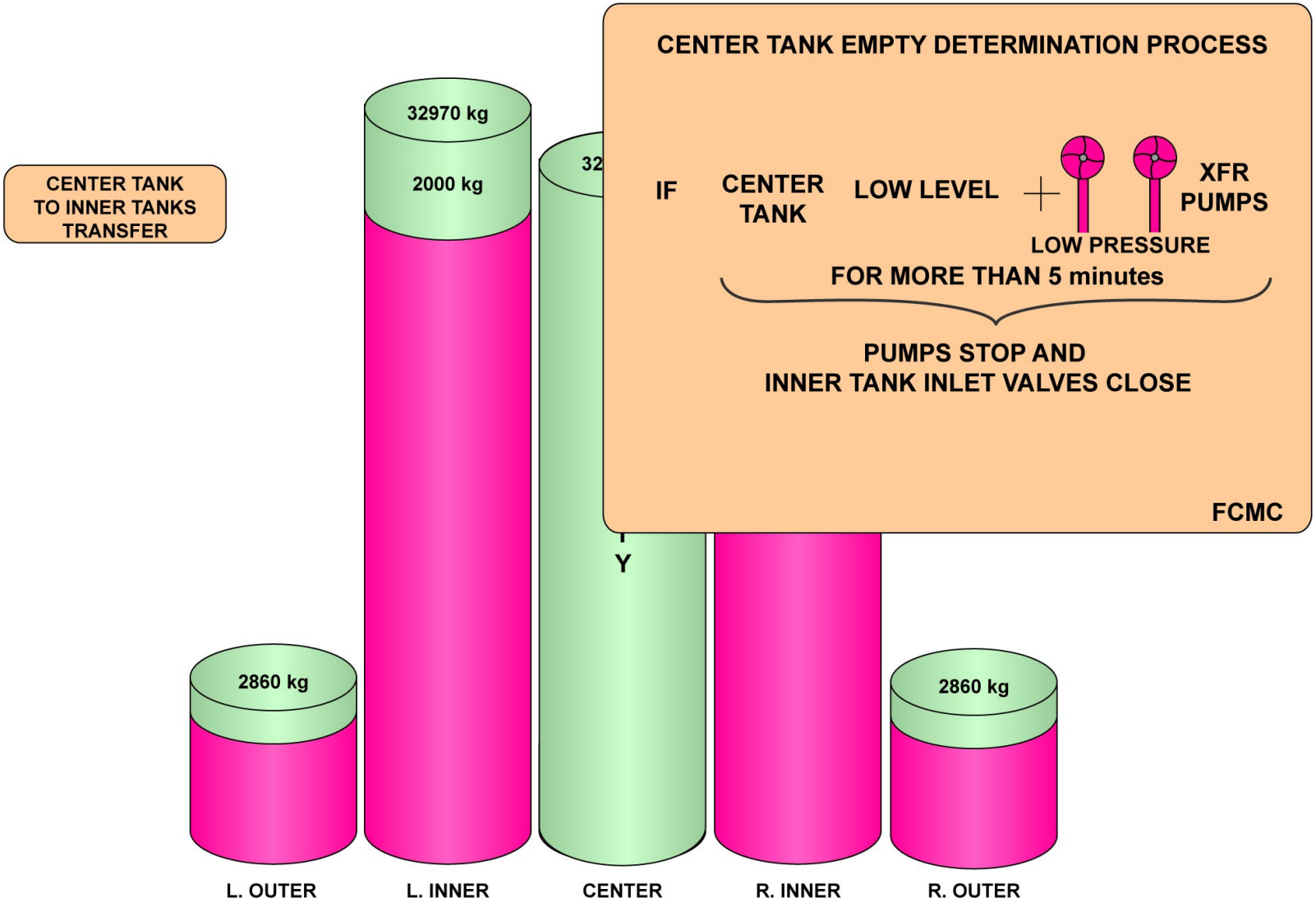

OPERATION - CENTER TANK TO INNER TANKS TRANSFER LOGIC

G7508471 - G3NT1T0 - FM28D600000003

This Page Intentionally Left Blank

G7508471 - G3NT1T0 - FM28D600000003

MAIN TRANSFER D/O (A330-200)

OPERATION (continued)

MANUAL TRANSFER: CENTER TANK TO INNER TANKS

The CTR TANK XFR P/B on the FUEL control panel gives manual control of the center tank to inner tank transfer. The switch controls the operation of:
- the transfer pumps,
- the inner tank inlet valves.

G7508471 - G3NT1T0 - FM28D600000003

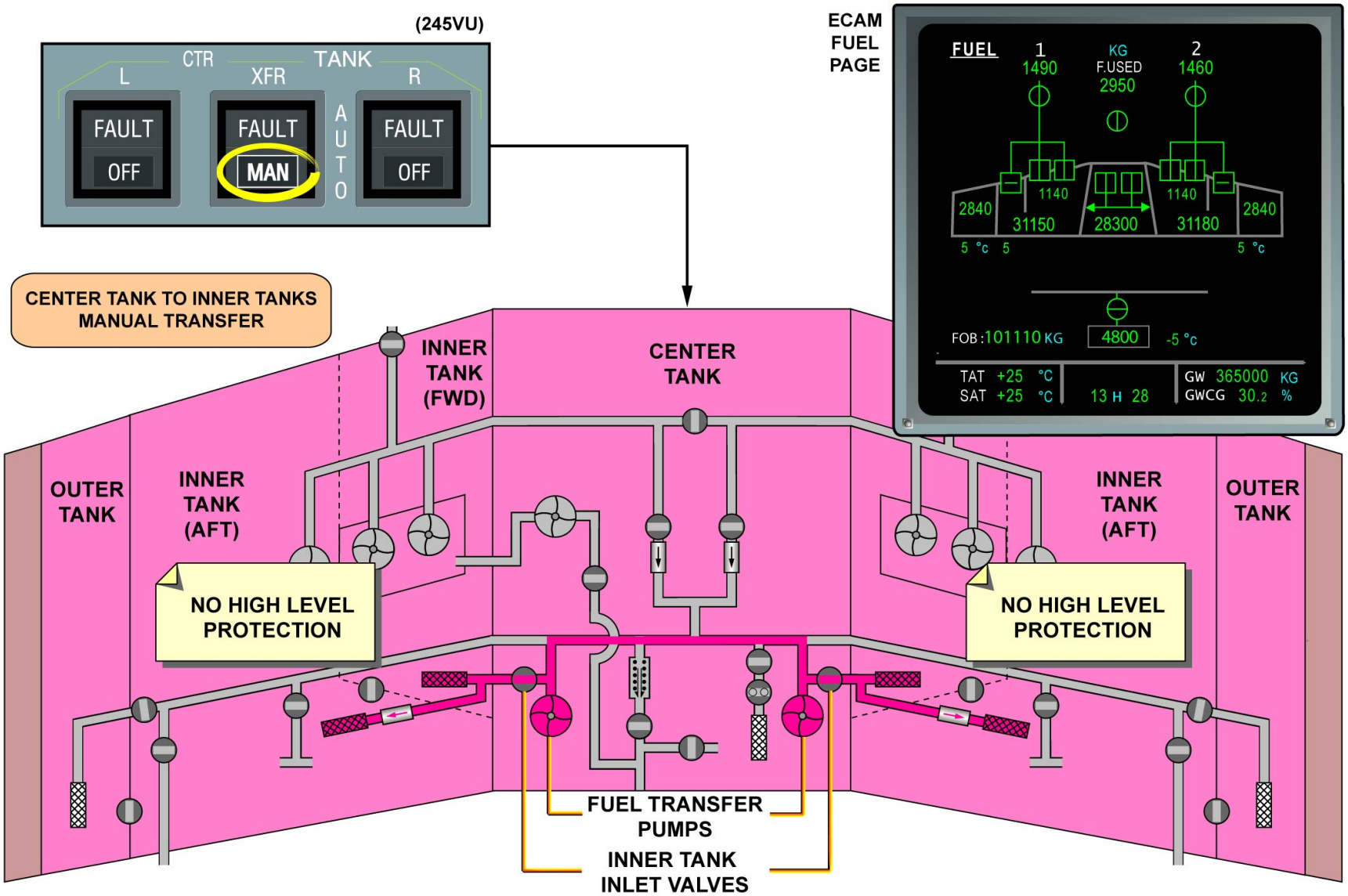

OPERATION - MANUAL TRANSFER: CENTER TANK TO INNER TANKS

G7508471 - G3NT1T0 - FM28D600000003

MAIN TRANSFER D/O (A330-200)

OPERATION (continued)

AUTOMATIC TRANSFER: OUTER TANKS TO INNER TANKS

Gravity is used to move fuel from the outer tanks to the inner tanks under the automatic control of the master FCMC when the OUTR TK XFR P/B is not in the MANual position.
Outer tank to inner tank transfer is activated by the FCMC via 2 inter-tank transfer valves, opening and closing at the same time, depending on the fuel level of the inner tanks.
The operation is displayed on the ECAM FUEL page.

G7508471 - G3NT1T0 - FM28D600000003

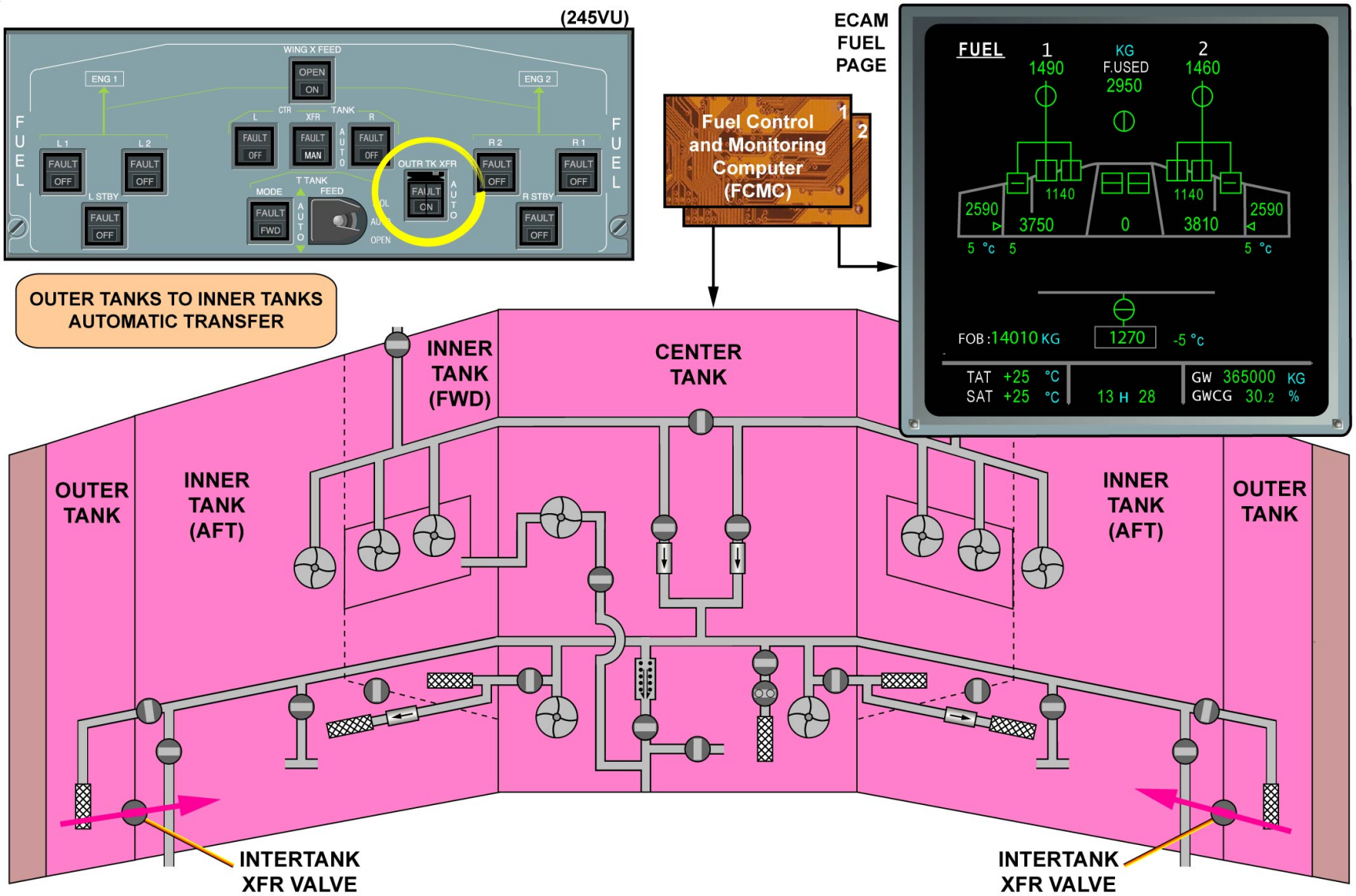

OPERATION - AUTOMATIC TRANSFER: OUTER TANKS TO INNER TANKS

G7508471 - G3NT1T0 - FM28D600000003

MAIN TRANSFER D/O (A330-200)

OPERATION (continued)

OUTER TANKS TO INNER TANKS TRANSFER LOGIC

As the fuel is burned, the fuel content of one of the two inner tanks decreases to low level, which is 3500 kg, on the FQI indication. When this occurs, the two inter-tank transfer valves open and gravity causes the fuel to flow from the outer tanks to the inner tanks. The fuel transfer continues until the fuel content of the inner tanks increases to 4000 kg, and the inter-tank transfer valves close. They open together again when the fuel level in one of the two inner tanks decreases again to 3500 kg.

This transfer cycle continues until the two outer tanks are empty. An outer tank empty condition is met when the outer tank fuel quantity is less than 10 kg for 5 minutes.

G7508471 - G3NT1T0 - FM28D600000003

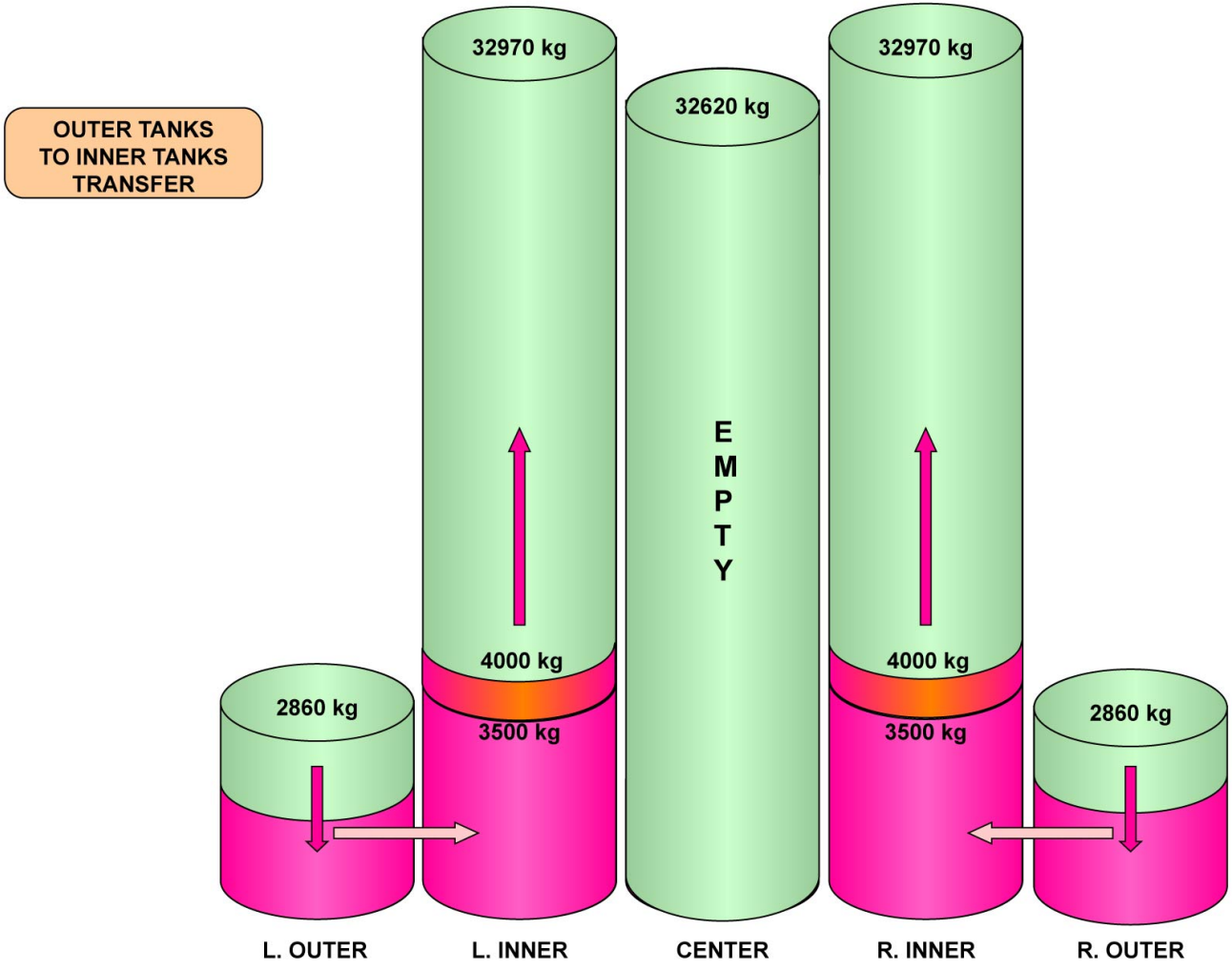

OPERATION - OUTER TANKS TO INNER TANKS TRANSFER LOGIC

G7508471 - G3NT1T0 - FM28D600000003

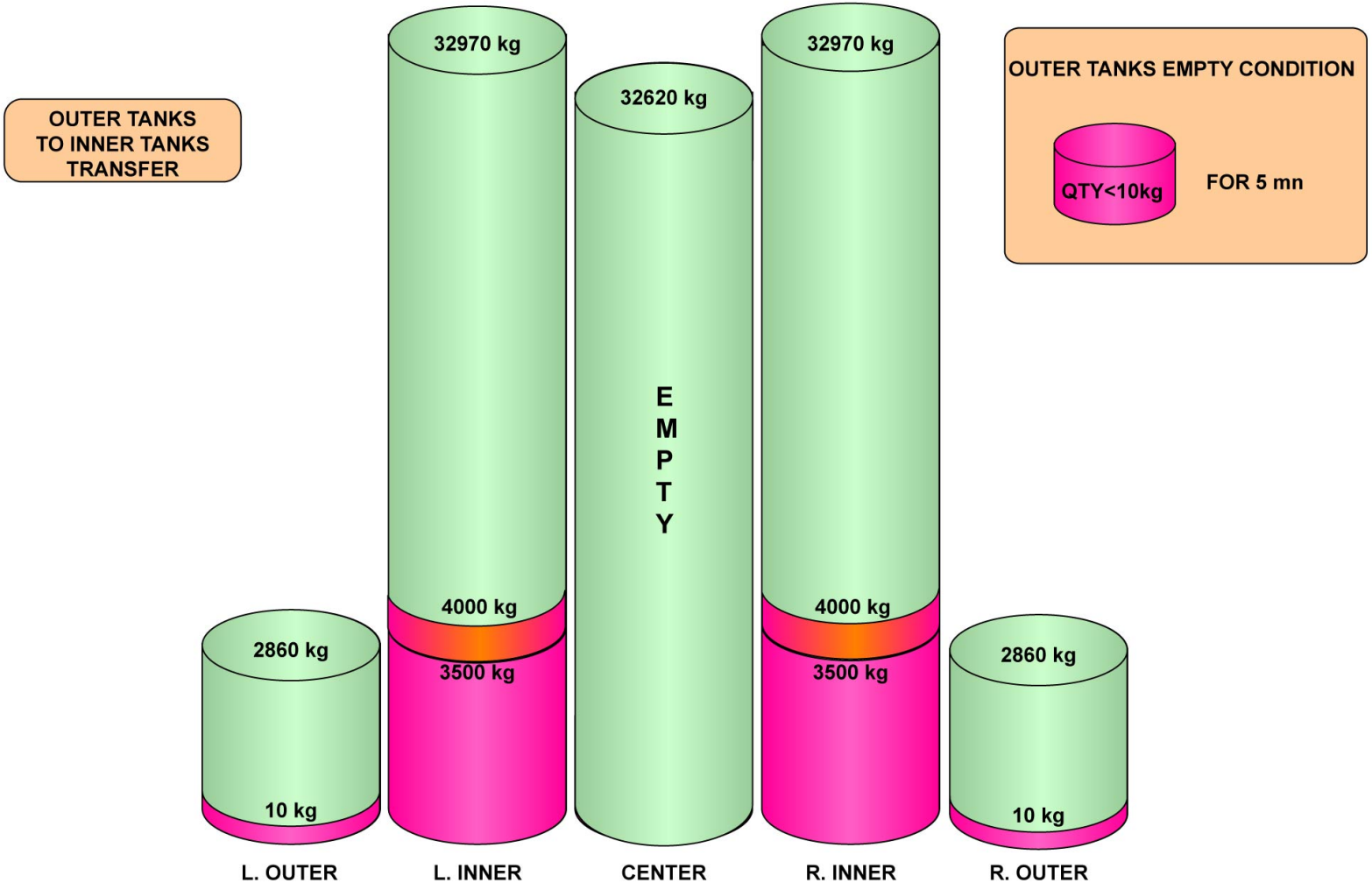

OPERATION - OUTER TANKS TO INNER TANKS TRANSFER LOGIC

G7508471 - G3NT1T0 - FM28D600000003

This Page Intentionally Left Blank

G7508471 - G3NT1T0 - FM28D600000003

MAIN TRANSFER D/O (A330-200)

OPERATION (continued)

MANUAL TRANSFER: OUTER TANKS TO INNER TANKS

If any failure is detected during automatic transfer from outer tanks to inner tanks, the FCMCs trigger a FAULT light on the OUTR TK XFR P/B, and a message on the ECAM requesting outer tank to inner tank selection.
When the OUTR TK XFR P/B is set to, the inter-tank transfer valves, the outer tank inlet valves and the inner tank inlet valves will be controlled to open.

G7508471 - G3NT1T0 - FM28D600000003

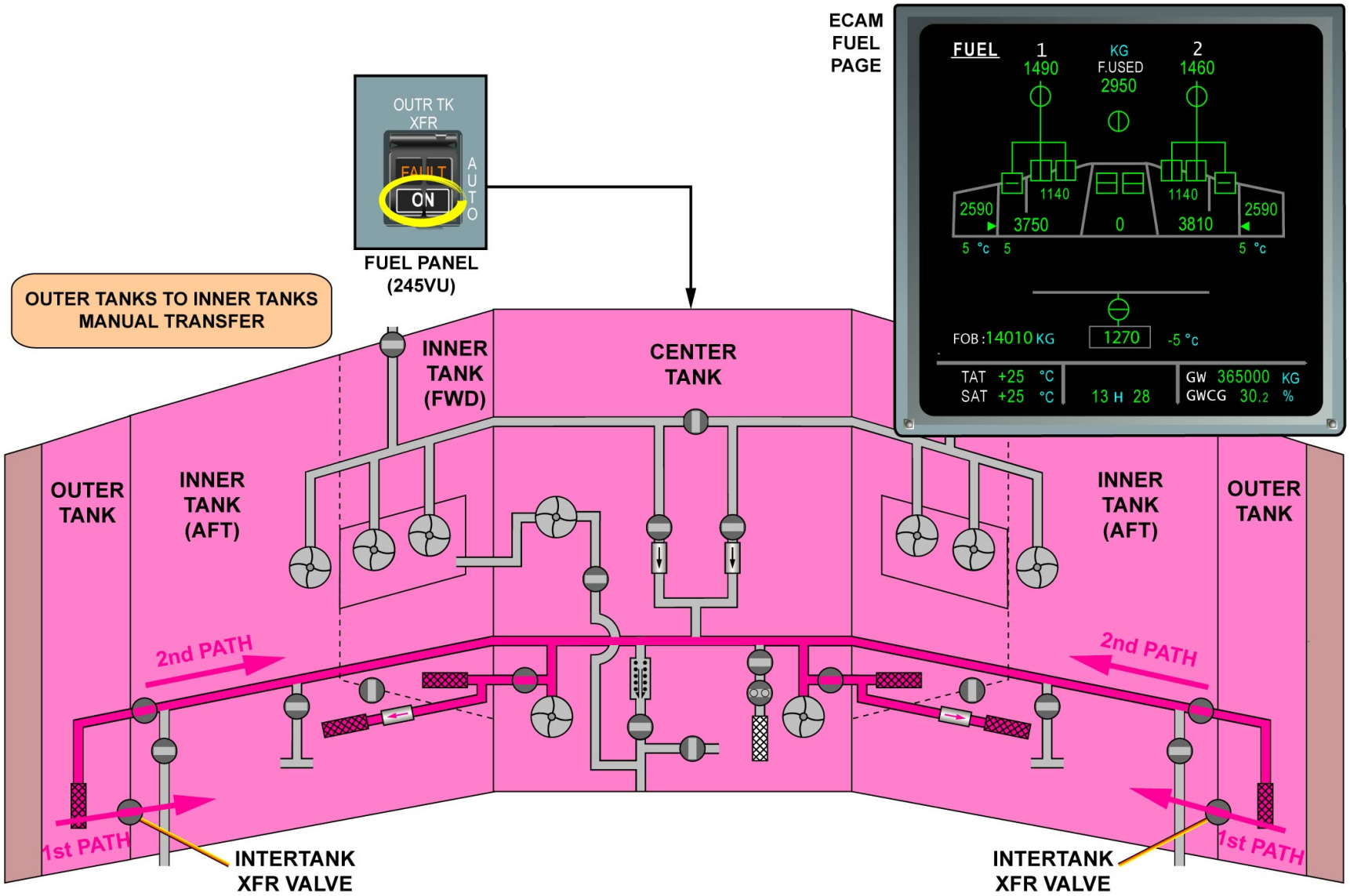

OPERATION - MANUAL TRANSFER: OUTER TANKS TO INNER TANKS

G7508471 - G3NT1T0 - FM28D600000003

MAIN TRANSFER D/O (A330-300)

GENERAL

The main transfer is automatically controlled by the Fuel Control and Monitoring Computers (FCMCs) but if necessary, the crew can manually override it from the cockpit FUEL panel. It controls the fuel flow from the outer tanks to the two inner tanks. This transfer occurs when the related inner fuel content decreases to a specified level. The operations are displayed on the ECAM FUEL page.

G7508471 - G3NT1T0 - FM28D600000009

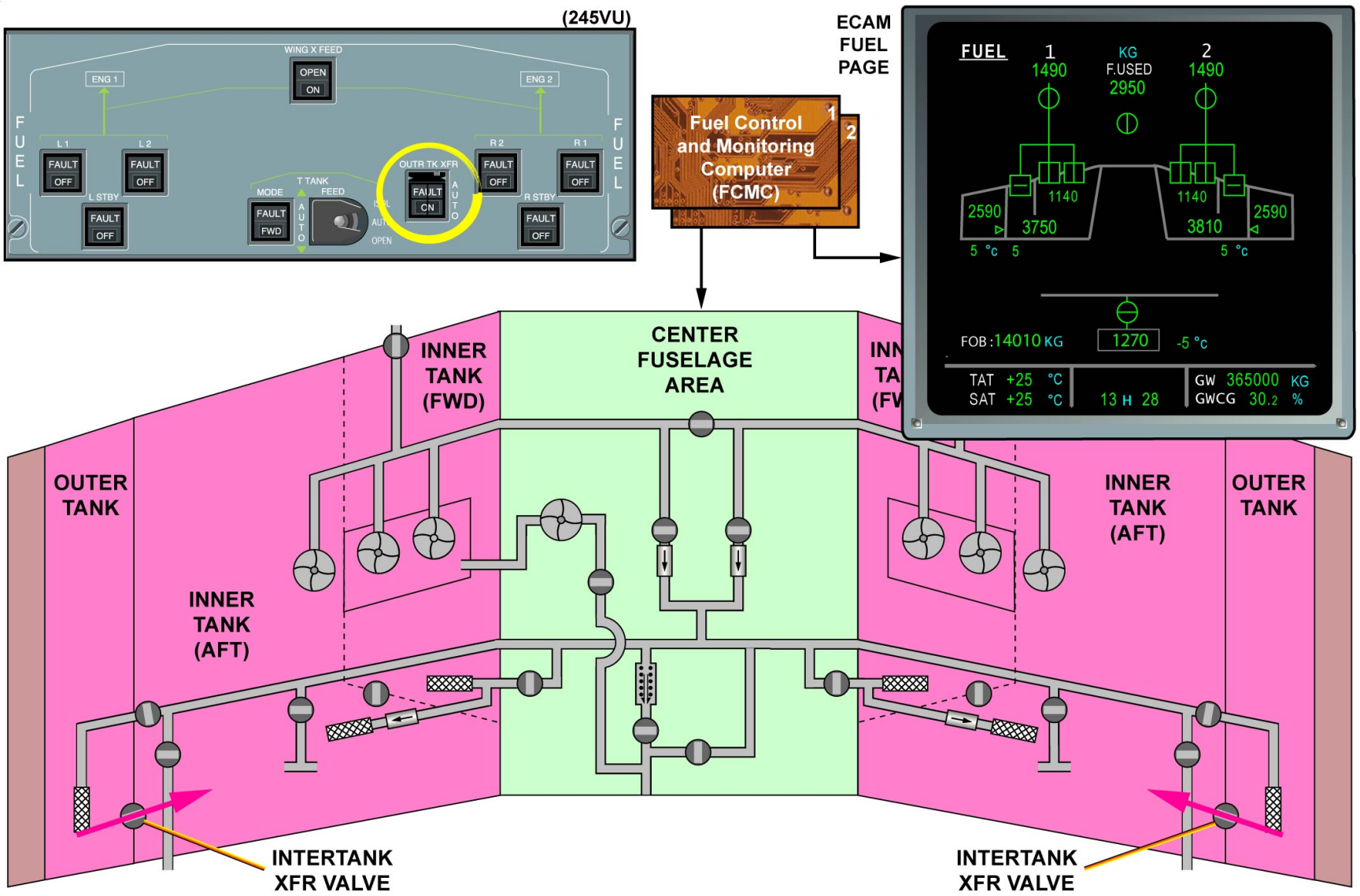
(245VU)
WING X FEED
OPEN
ON
ENG 1
ENG 2
FUEL
L 1
L 2
R 2
R 1
FAULT
OFF
L STBY
R STBY
T TANK
MODE
FEED
FWD
AUTO
OUTR TK XFR
CN
ECAM
FUEL
PAGE
Fuel Control
and Monitoring
Computer
(FCMC)
FUEL
1
1490
KG
F.USED
2950
2
1490
1140
2590
3750
3810
5 °c 5
5 °c
FOB : 14010 KG
1270
-5 °c
TAT +25 °C
SAT +25 °C
13 H 28
GW 365000 KG
GWCG 30.2 %
CENTER
FUSELAGE
AREA
INNER
TANK
(FWD)
OUTER
TANK
INNER
TANK
(AFT)
INNER
TANK
(AFT)
OUTER
TANK
INTERTANK
XFR VALVE
INTERTANK
XFR VALVE

GENERAL

MAIN TRANSFER D/O (A330-300)

DESCRIPTION

This topic describes the components of the main transfer.

OUTER TANK INLET VALVES AND ACTUATORS

Each outer tank inlet valve is an interface between the refuel gallery and outer tank. Its primary function is to control the flow of fuel into the outer tank. But during suction defuel or transfer, it controls the fuel flow out of the outer tank.

INNER TANK INLET VALVES AND ACTUATORS

The inner tank inlet valves, of the ball-valve type, are installed in the fuel supply line of each inner tank. They independently control the flow of fuel from the refuel gallery to the inner tanks. The valves are installed in the center tank and have a spindle which goes through the rear spar to engage with the actuator. The actuator is a single electrical motor and has a visual position indicator.

INTERTANK TRANSFER VALVES AND ACTUATORS

Intertank transfer valves, of the ball-valve type, are installed in the inner tanks and supply the fuel from the outer tanks to the inner tanks. A single electrical motor actuator attached to the wing front spar with a visual position indicator operates them.

G7508471 - G3NT1T0 - FM28D6000000009

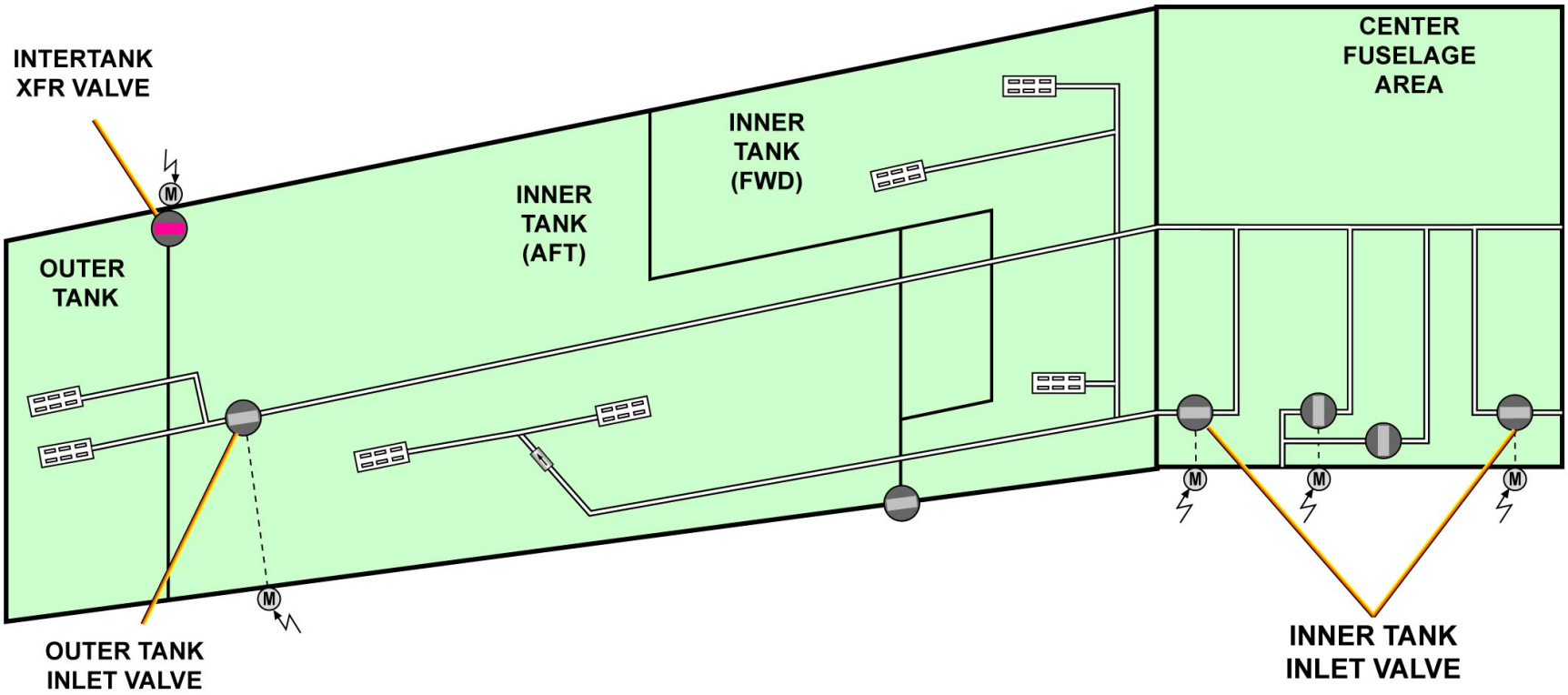

Ⓜ MOTOR VALVE ACTUATOR

DESCRIPTION - OUTER TANK INLET VALVES AND ACTUATORS ... INTERTANK TRANSFER VALVES AND ACTUATORS

G7508471 - G3NT1T0 - FM28D600000009

MAIN TRANSFER D/O (A330-300)

OPERATION

This topic describes the operation of the main transfer.

OUTER TANKS TO INNER TANKS AUTOMATIC TRANSFER

Gravity is used to move fuel from the outer tanks to the inner tanks under automatic control of the master FCMC when the OUTR TK XFR P/B is not in MANual position.
Outer tanks to inner tanks transfer is activated by the FCMC via 2 intertank transfer valves, opening and closing at the same time, depending on inner tanks fuel level.
The operation is displayed on the ECAM FUEL page.

G7508471 - G3NT1T0 - FM28D600000009

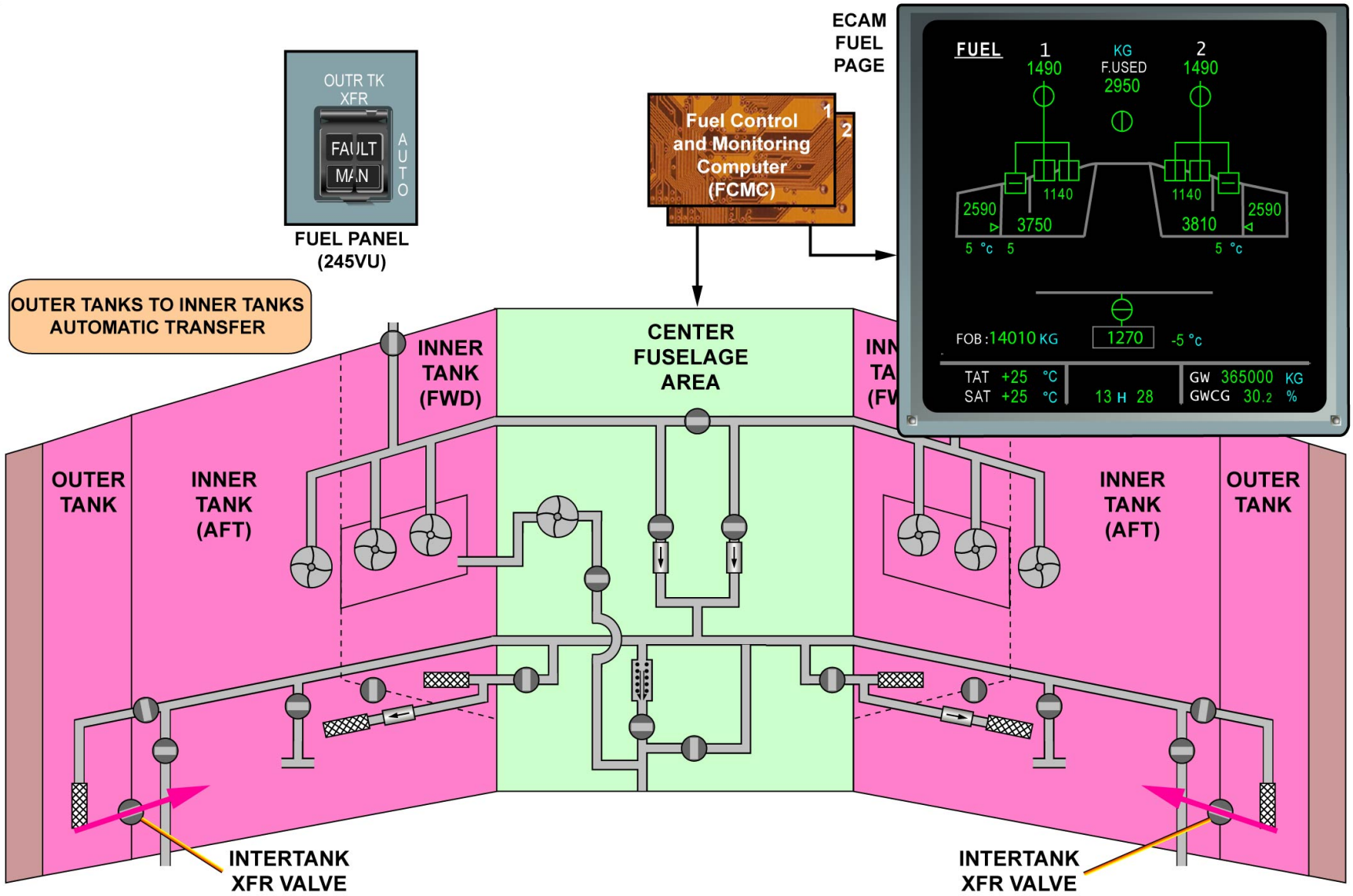

OPERATION - OUTER TANKS TO INNER TANKS AUTOMATIC TRANSFER

G7508471 - G3NT1T0 - FM28D600000009

MAIN TRANSFER D/O (A330-300)

OPERATION (continued)

OUTER TANKS TO INNER TANKS TRANSFER LOGIC

As the fuel is burned, the fuel contents of one of the two inner tanks decreases to low level which is 3500 kg, on the Fuel Quantity Indicating (FQI) indication. When this occurs, the two intertank transfer valves open and gravity causes the fuel to flow from the outer tanks to the inner tanks. The fuel transfer goes on until the fuel contents of the inner tanks increase to 4000 kg, and the intertank transfer valves close. They open together again when the fuel level in one of the two inner tanks decreases again to 3500 kg.
This transfer cycle continues until the two outer tanks are empty. An outer tank empty condition is met when the outer tank fuel quantity is less than 10 kg for 5 minutes.

G7508471 - G3NT1T0 - FM28D600000009

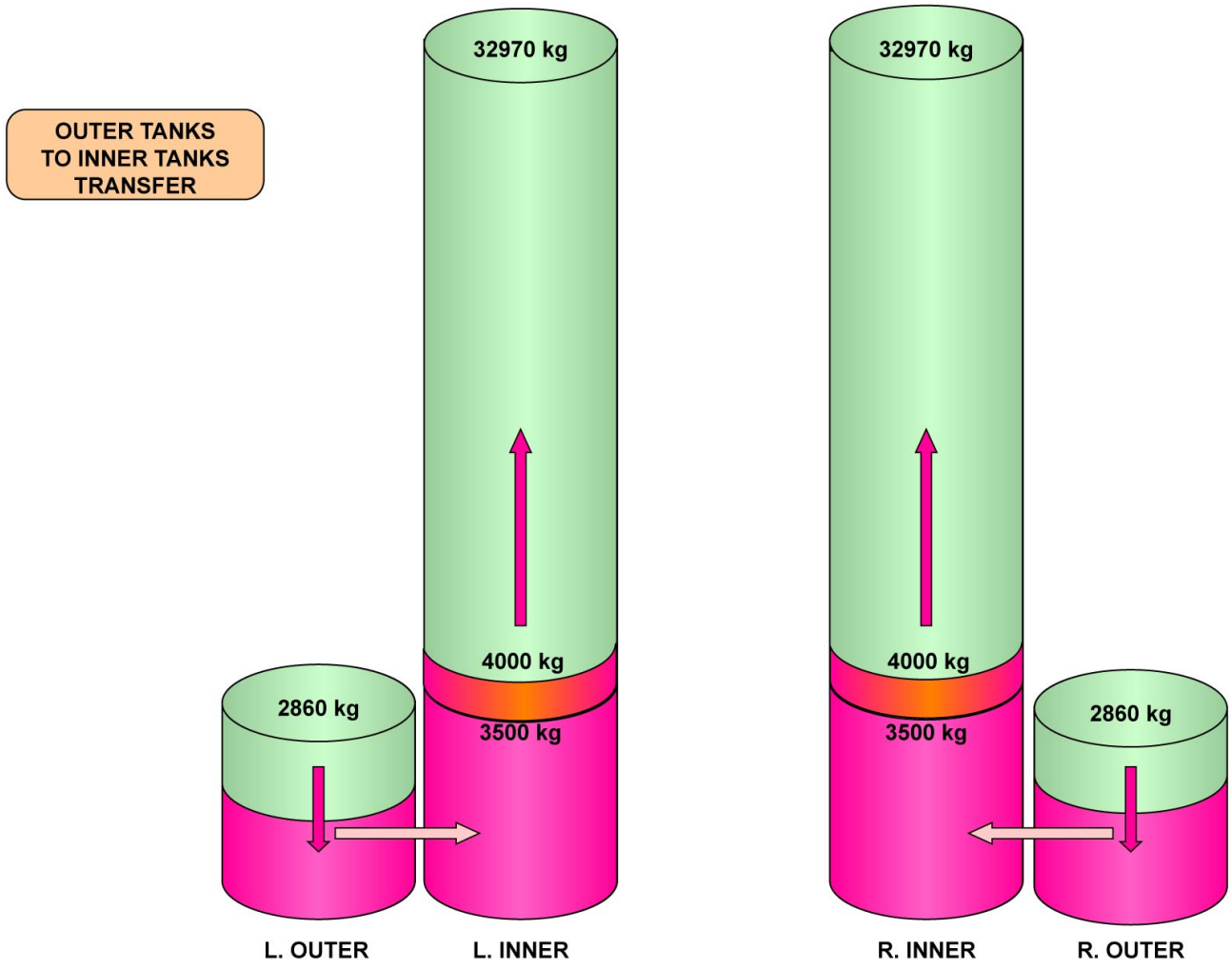

OPERATION - OUTER TANKS TO INNER TANKS TRANSFER LOGIC

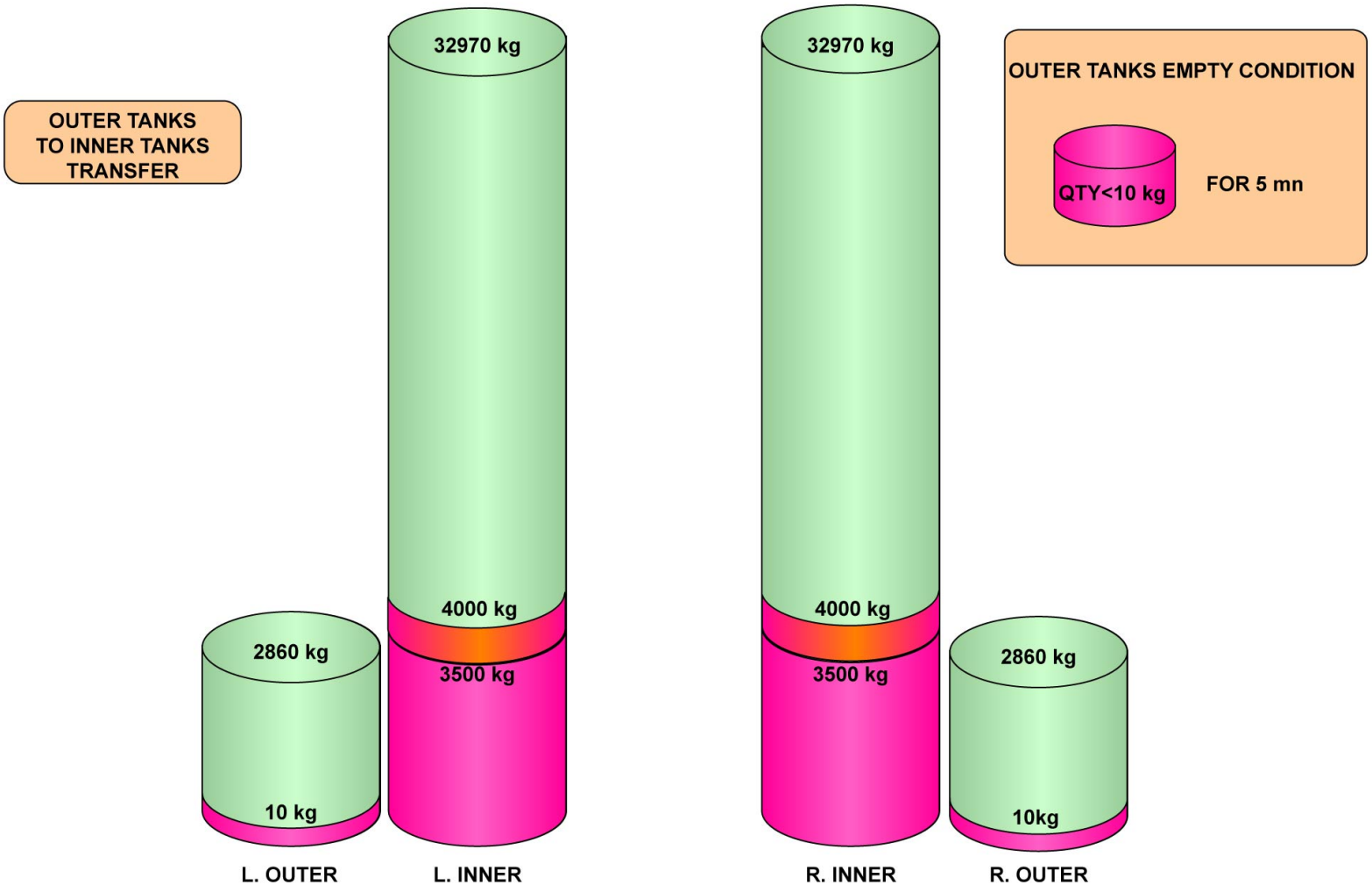

OPERATION - OUTER TANKS TO INNER TANKS TRANSFER LOGIC

G7508471 - G3NT1T0 - FM28D600000009

This Page Intentionally Left Blank

G7508471 - G3NT1T0 - FM28D6000000009

MAIN TRANSFER D/O (A330-300)

OPERATION (continued)

OUTER TANKS TO INNER TANKS MANUAL TRANSFER

If any failure is detected during outer tanks to inner tanks automatic transfer, the FCMCs trigger a FAULT light on the OUTR TK XFR P/B, and a message on the ECAM requesting outer tanks to inner tanks MANual selection.
When the OUTR TK XFR P/B is set to MANual, the intertank transfer valves, the outer tank inlet valves and the inner tank inlet valves will be controlled open.

G7508471 - G3NT1T0 - FM28D600000009

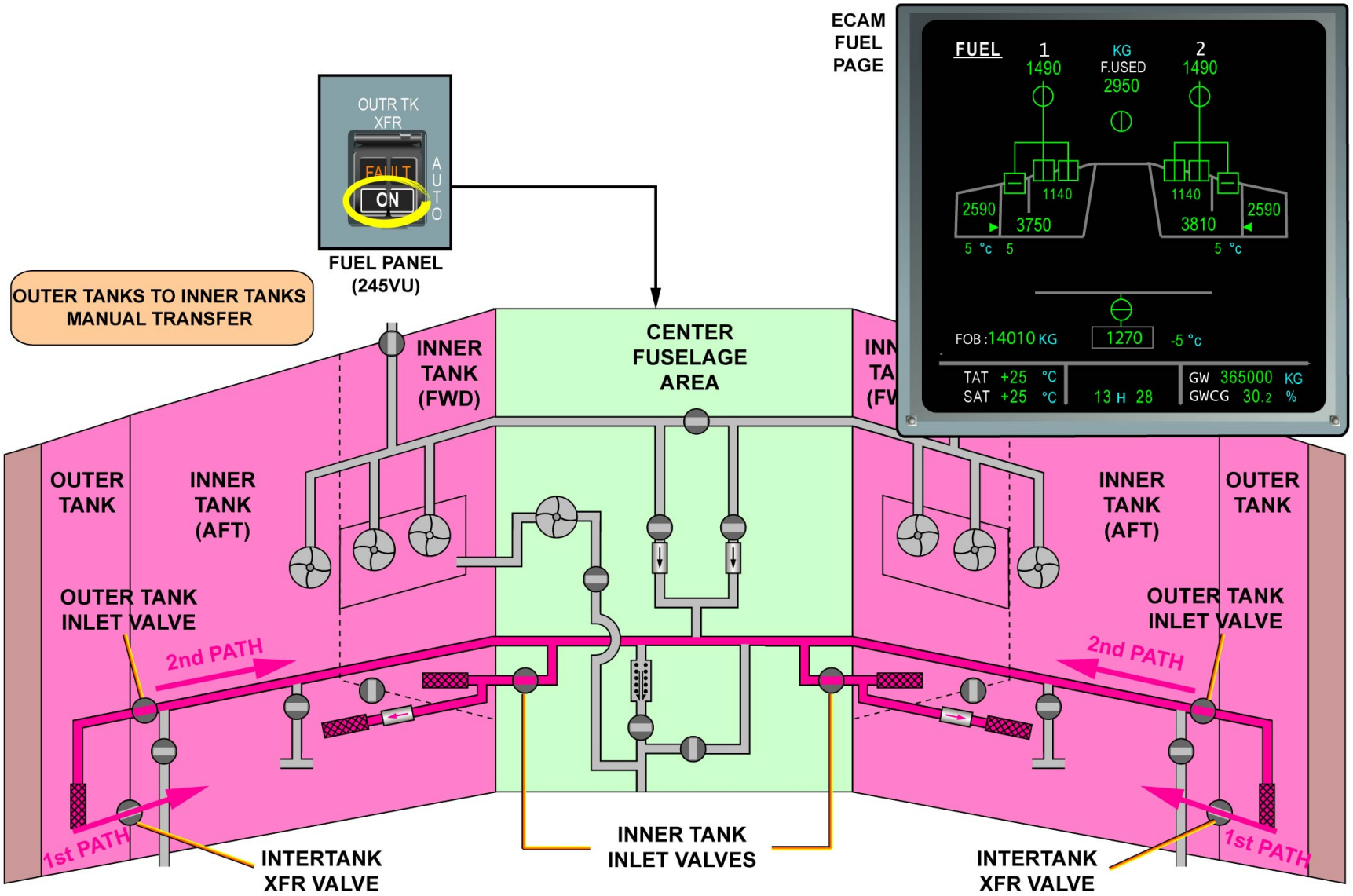

OPERATION - OUTER TANKS TO INNER TANKS MANUAL TRANSFER

G7508471 - G3NT1T0 - FM28D600000009

TRIM TRANSFER D/O (A330-200)

GENERAL

The trim transfer system controls the Center of Gravity (CG) of the A/C during flight in order to reduce the THS aerodynamic drag and consequently to minimize the fuel consumption.
The Fuel Control and Monitoring Computers (FCMCs) calculate the CG of the A/C and compare the result to a memorized target value. If necessary, the FCMCs then make a decision to move fuel aft or FWD to control the CG. Usually only one aft transfer is made during each flight. But, as the fuel burns, many small FWD transfers are made.
The ECAM gives trim transfer system information to the crew.

G7508471 - G3NT1T0 - FM28D7000000003

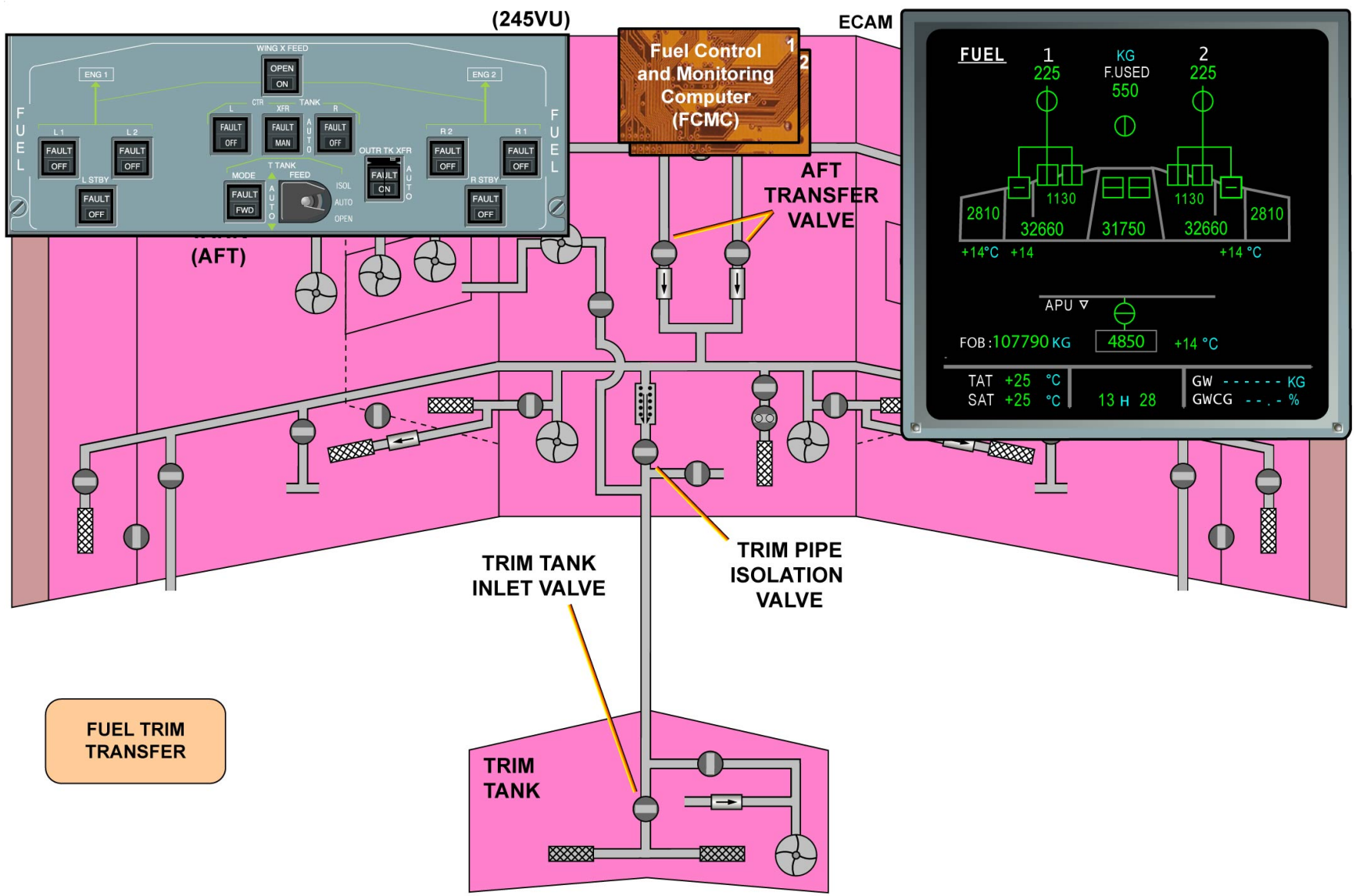
(245VU)
ECAM
Fuel Control and Monitoring Computer (FCMC)
1
2
WING X FEED
OPEN
ON
ENG 1
ENG 2
FUEL
L 1
L 2
L STBY
R 2
R 1
R STBY
FAULT
OFF
CTR TANK
XFR
L
R
MAN
OUTR TK XFR
ON
T TANK
MODE
FEED
FWD
ISOL
AUTO
OPEN
(AFT)
AFT TRANSFER VALVE
FUEL
1
225
KG
F.USED
550
2
225
2810
1130
32660
31750
+14°C
+14
+14 °C
APU
FOB : 107790 KG
4850
TAT +25 °C
SAT +25 °C
13 H 28
GW - - - - - - KG
GWCG - - . - %
TRIM TANK INLET VALVE
TRIM PIPE ISOLATION VALVE
FUEL TRIM TRANSFER
TRIM TANK

GENERAL

TRIM TRANSFER D/O (A330-200)

DESCRIPTION

TRIM PIPE ISOLATION VALVE, AUXILIARY FORWARD TRANSFER VALVE AND ACTUATORS

A trim pipe isolation valve and an auxiliary FWD transfer valve, both of the ball valve type, are installed in the center tank and attached to the FWD face of the rear spar in the center tank. The trim pipe isolation valve is installed at the FWD end of the fuel supply pipe to the trim tank to control all the aft transfers and the FWD transfers to the wings. The auxiliary FWD transfer valve is installed in the trim pipe, in the center tank, to control the fuel flow from the trim tank to the center tank.
Each one is operated with a single electrical motor actuator attached to the rear face of the center tank rear spar and equipped with a visual position indicator.

TRIM TANK ISOLATION VALVE AND ACTUATOR

A trim tank isolation valve, of the ball valve type, is installed in the fuel line from the trim tank to the trim pipe in order to control the FWD transfer of fuel from the trim tank to the trim pipe. It is installed at the bottom of the trim tank. It is operated with an electrical motor actuator attached to the bottom skin of the trim tank and equipped with a visual position indicator.

TRIM TANK INLET VALVE AND ACTUATOR

A trim tank inlet valve, of the ball valve type, is installed in the fuel supply pipe to the trim tank in order to control the flow of fuel into the trim tank. The valve is in the trim tank and is attached to the bottom skin of the trim tank. It is operated with an electrical motor actuator attached to the bottom skin of the trim tank and equipped with a visual position indicator.

AFT TRANSFER PUMPS AND CANISTERS

The aft transfer pumps are installed in the center tank and inner tanks 1, 2. When in operation, each pump supplies fuel from its related fuel tank to the trim transfer system and the jettison system. Each pump is driven by a 3-phase 115 VAC motor and is enclosed in a canister attached to the tank bottom skin. Pumps and canisters are all assembled in the same way and are interchangeable.

TRIM TRANSFER PUMP, PRESSURE SWITCH AND JET PUMPS

The fuel trim transfer pump is installed horizontally and attached to the FWD and right side face of the trim tank. The pump unit is enclosed in a removable sealing case externally bolted onto the trim tank FWD face. The impeller type pump element is driven by a 3-phase 115 VAC motor and installed in the pump housing. A 6 to 8 psi pump pressure switch is also installed on the pump housing. Inside the tank, the 2 outlets on the pump housing are connected to the trim pipe.

TRANSFER PUMPS CHECK VALVES

The outlet pipe from fuel transfer pump contains a check valve. It prevents an opposite fuel flow through the pump when it is not in operation.

TRIM TRANSFER PUMP PRESSURE SWITCH

The trim transfer pump has an output monitoring LP switch which operates between 6 and 8 psi depending on pressure increase or decrease.

G7508471 - G3NT1T0 - FM28D700000003

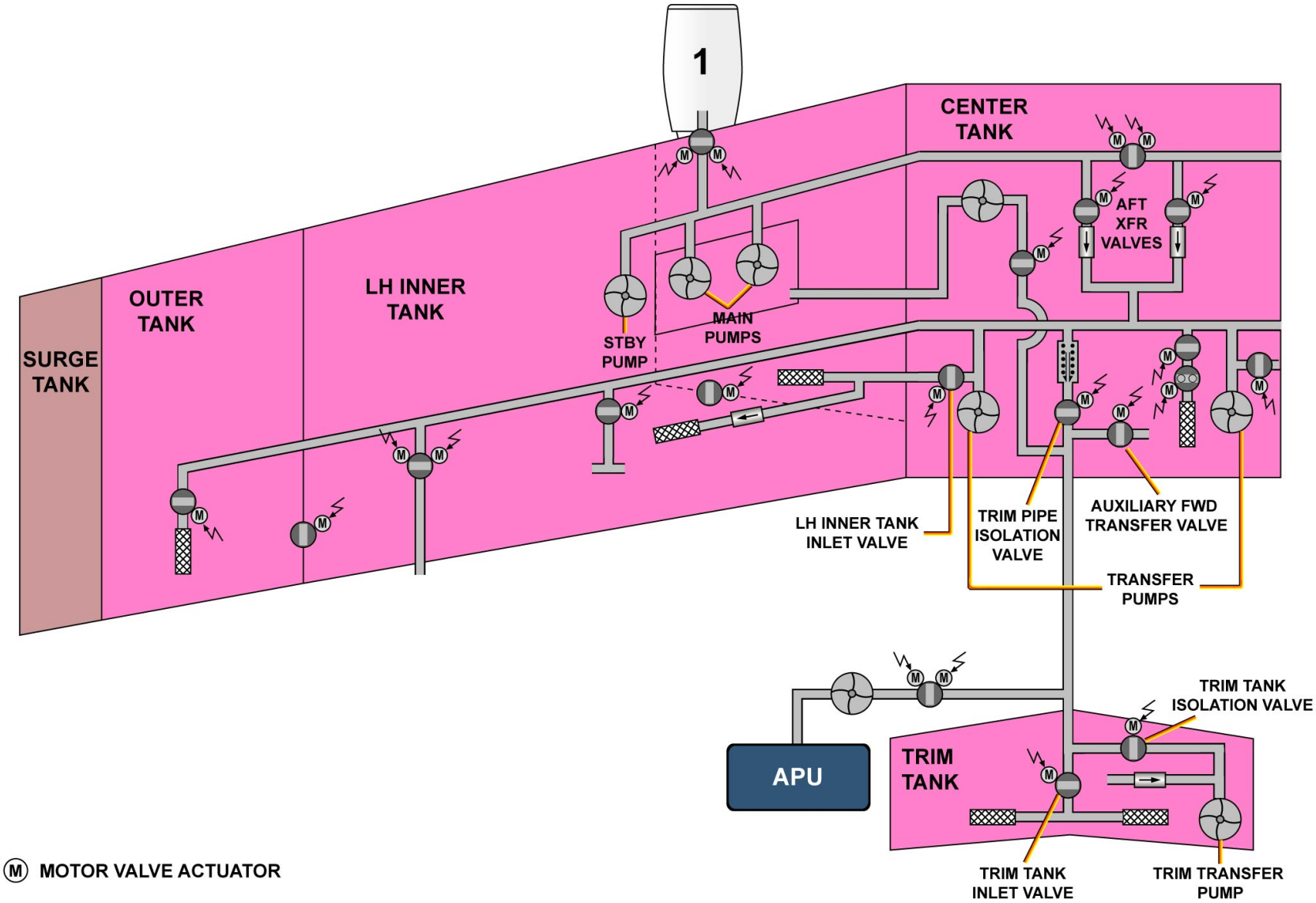

DESCRIPTION - TRIM PIPE ISOLATION VALVE, AUXILIARY FORWARD TRANSFER VALVE AND ACTUATORS ... TRIM TRANSFER PUMP PRESSURE SWITCH

G7508471 - G3NT1T0 - FM28D700000003

TRIM TRANSFER D/O (A330-200)

TRIM TRANSFER CONTROL

Before each flight, the crew inputs the A/C Zero Fuel Center of Gravity (ZFCG) and Zero Fuel Weight (ZFW) data into the Flight Management Guidance and Envelope Computers (FMGECs) via the MCDU. The two FMGECs independently transmit this data to the FCMCs.
Each FCMC uses the ZFW from the FMGECs and the tanks fuel weight to calculate the A/C Gross Weight (GW). This GW is output to the ECAM FUEL page, and is used, in the FCMCs, to obtain the target CG from the memorized CG versus percentage of Mean Aerodynamic Chord (MAC) CG table.
In the same time, the FCMCs calculate the fuel weight CG using the FQI, the pitch, roll and acceleration data from the Air Data Inertial Reference Units (ADIRUs) 1 and 2, and the THS position from the Flight Control Data Concentrators (FCDCs). Then, with the ZFWCG transmitted by the FMGECs and the fuel weight CG, the FCMCs calculate the Gross Weight Center of Gravity (GWCG). This GWCG is output to the ECAM FUEL page. The FCMCs, in their transfer logic part, compare the GWCG with the target CG to determine if a FWD transfer or an aft transfer is needed.
CG control during automatic operation:
The FMGEC independently monitors the CG of the A/C. If it detects that the A/C CG is too far aft, it sends a signal "CG target FWD" to the FCMCs. The master FCMC moves the target CG forward 2.0% MAC. This is latched until the end of the flight. If the FMGEC detects that the CG is still aft of the new target CG, it sends a signal to the FCMCs. The FCMCs then move the target CG forward 0.5% MAC for 10 minutes. After 10 minutes the system goes back to normal operation.
This procedure can occur twice more until the target CG is first 4.0% then 6.0% MAC forward of the initial position. If the error is detected again, the FCMC stops the CG control and shows an ECAM warning to the crew. The crew then manually sets a forward transfer.

G7508471 - G3NT1T0 - FM28D700000003

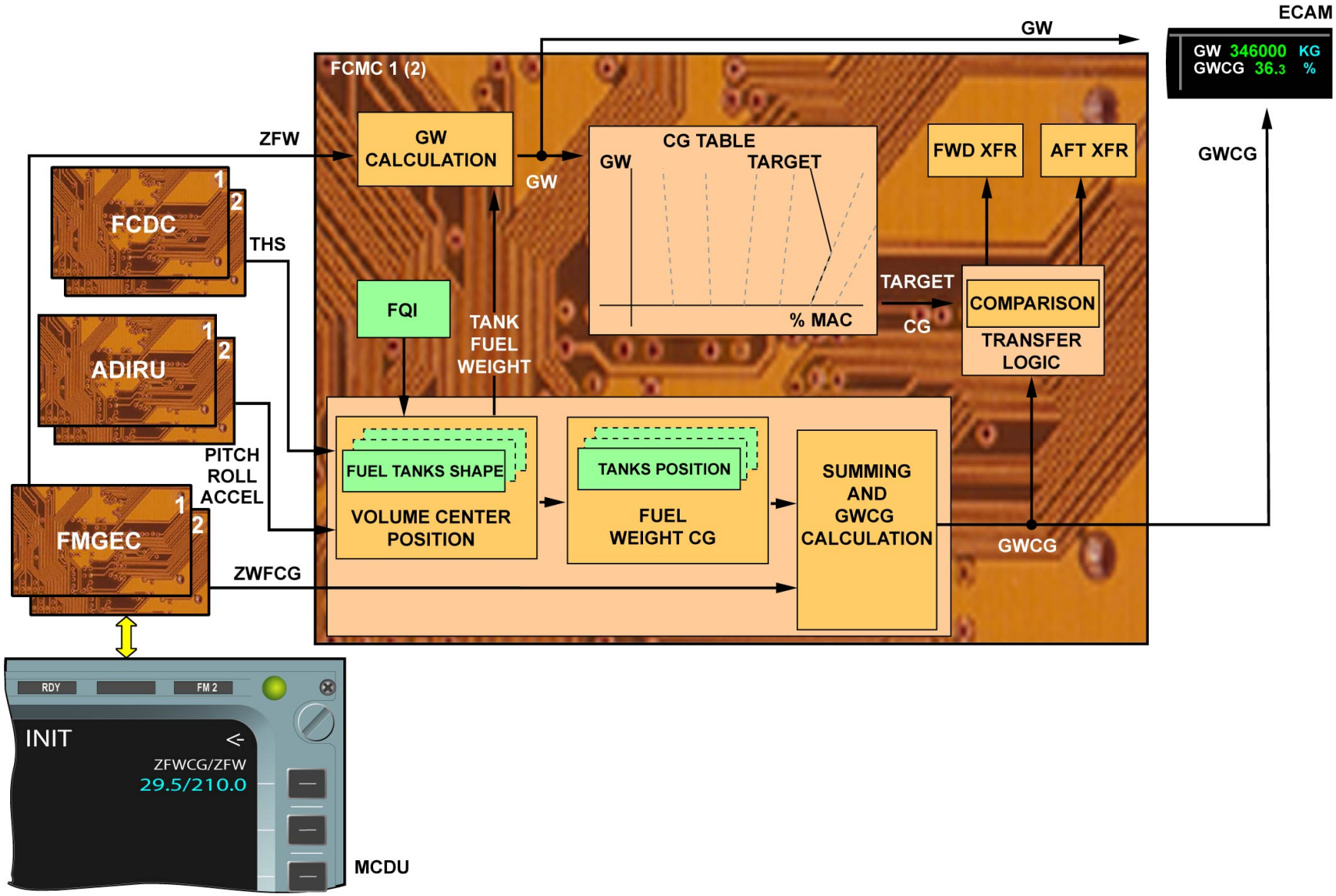

TRIM TRANSFER CONTROL

G7508471 - G3NT1T0 - FM28D700000003

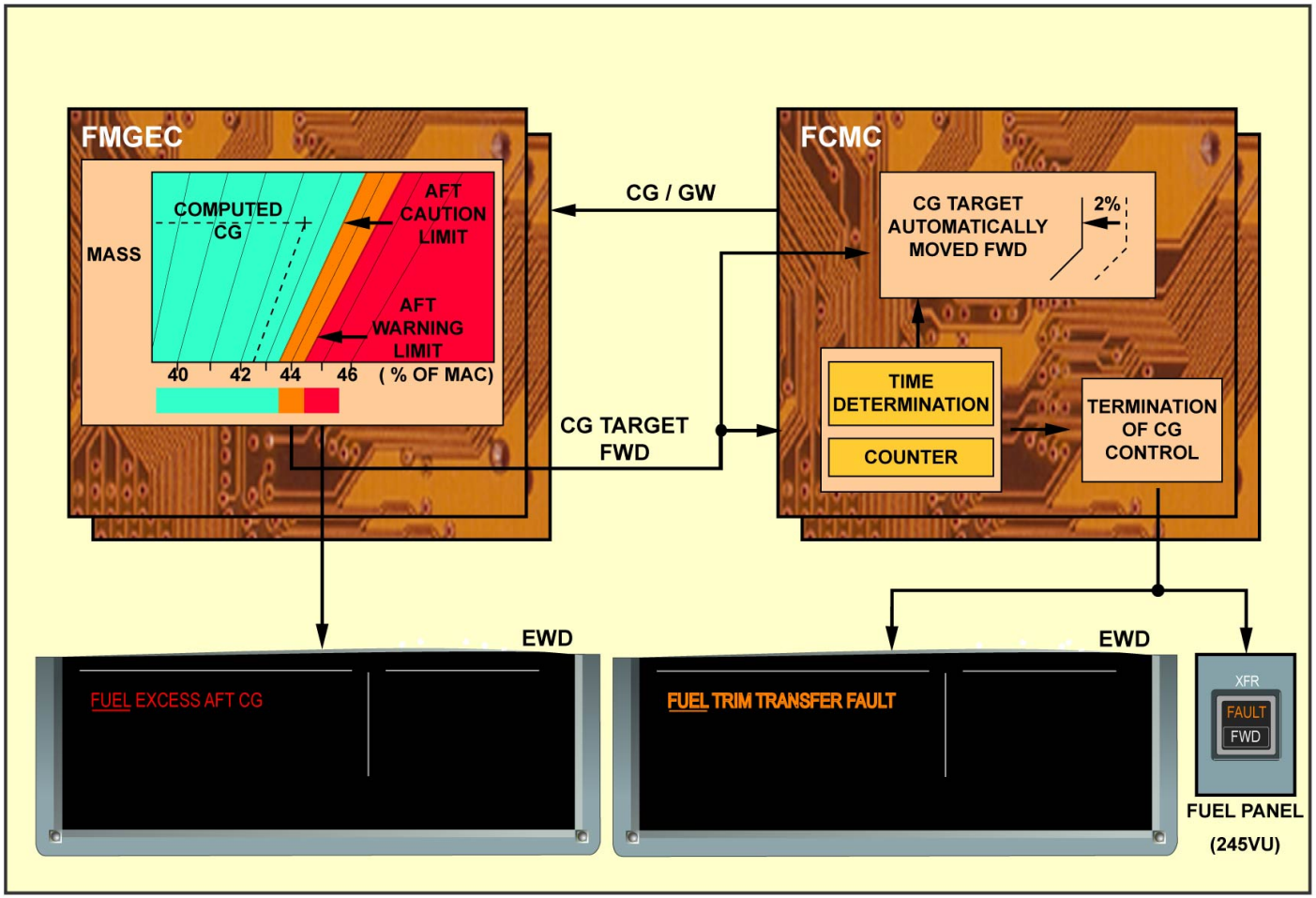

TRIM TRANSFER CONTROL

This Page Intentionally Left Blank

G7508471 - G3NT1T0 - FM28D7000000003

TRIM TRANSFER D/O (A330-200)

AFT TRANSFER AUTOMATIC OPERATION

The master FCMC has full control of the A/C CG when the A/C is above FL255, until the A/C descends below FL245. An aft transfer can only start when all of these conditions occur at the same time:
- the calculated CG is less than the target CG minus 1.0% MAC for more than 60 seconds,
- the L/G is retracted,
- the slats are retracted,
- the trim tank is not full,
- an aft transfer is not prevented,
- the inner tanks fuel contents are more than 6250 kg.

The aft transfer stops if one of these conditions occurs:
- the trim tank becomes full,
- the calculated CG is greater than the target CG by 0.5% MAC,
- the fuel quantity in the inner tank decreases to less than 6250 kg,
- the T TK FEED switch is not on AUTO,
- the crew sets the T TANK MODE P/BSW to FWD,
- the jettison system is set to ON,
- the CTR TANK XFR P/BSW is set to MAN,
- the OUTER TK XFR P/BSW is set to MAN,
- the A/C descends below 7468 m,
- the time-to-destination is less than 35 minutes.
- the FQI system shows fuel in the trim surge tank,
- the FQI system shows fuel in the wing surge tank,

Usually only one aft transfer is made during each flight. This transfer stops when the aft CG target is reached or the trim tank is full.

G7508471 - G3NT1T0 - FM28D7000000003

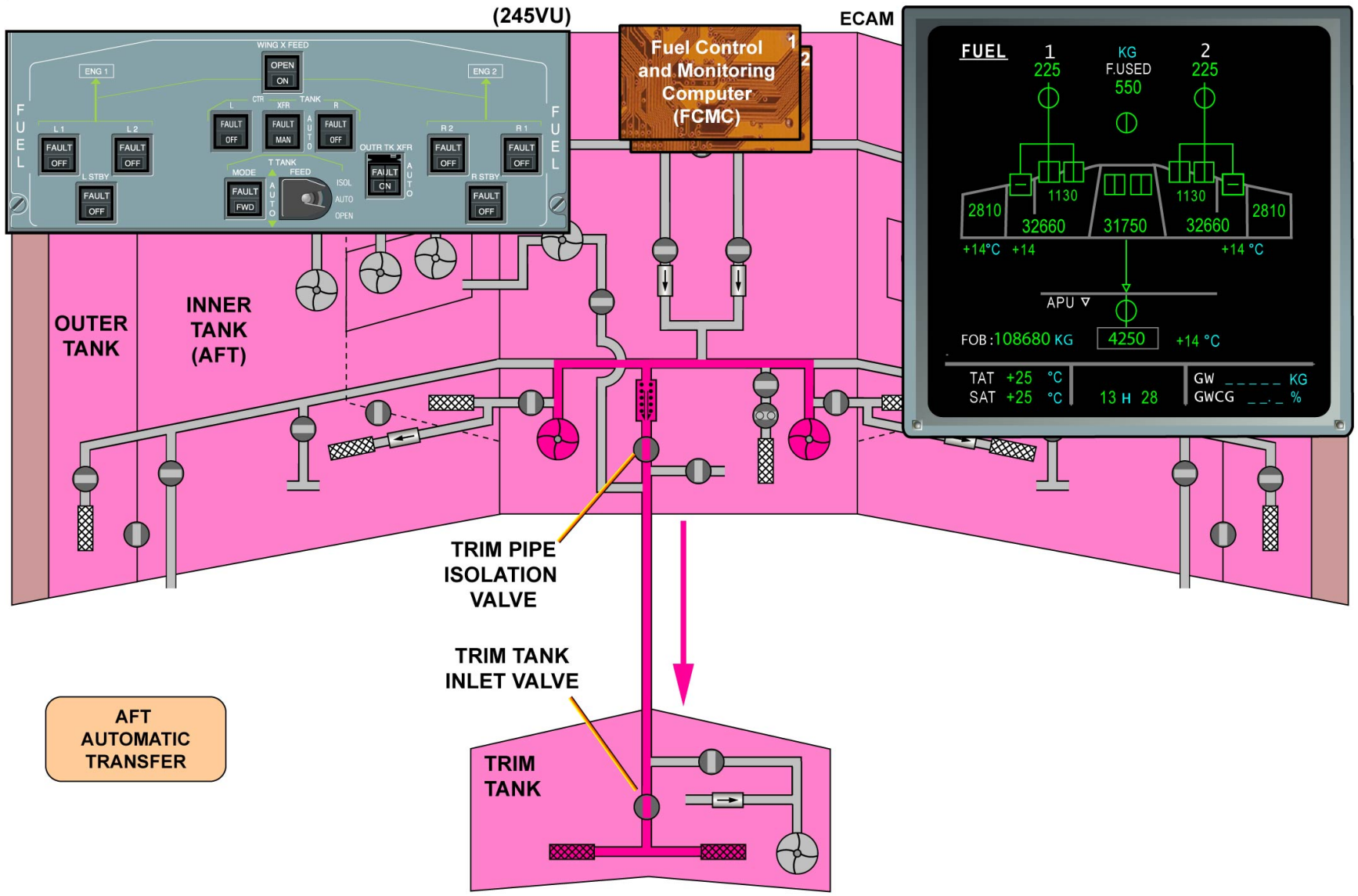

AFT TRANSFER AUTOMATIC OPERATION

G7508471 - G3NT1T0 - FM28D700000003

TRIM TRANSFER D/O (A330-200)

AFT TRANSFER AUTOMATIC OPERATION (continued)

CENTER TANK TO TRIM TANK FUEL TRANSFER

The center tank to trim tank fuel transfer uses the fuel pressure of the 2 center left and right aft transfer pumps, the trim pipe isolation valve and the trim tank inlet valve.

When the L or R CENTER TANK XFR P/BSW is set to on, the related transfer pump is able to operate. The selection of one of the two switches also gives the FCMCs control of the center tank to trim tank fuel transfer. Usually the two P/BSWs are set to on at the same time and, when the FCMCs start an aft transfer, they have control of the trim pipe isolation valve and the trim tank inlet valve. The transfer indication is shown on the FUEL ECAM page.

G7508471 - G3NT1T0 - FM28D7000000003

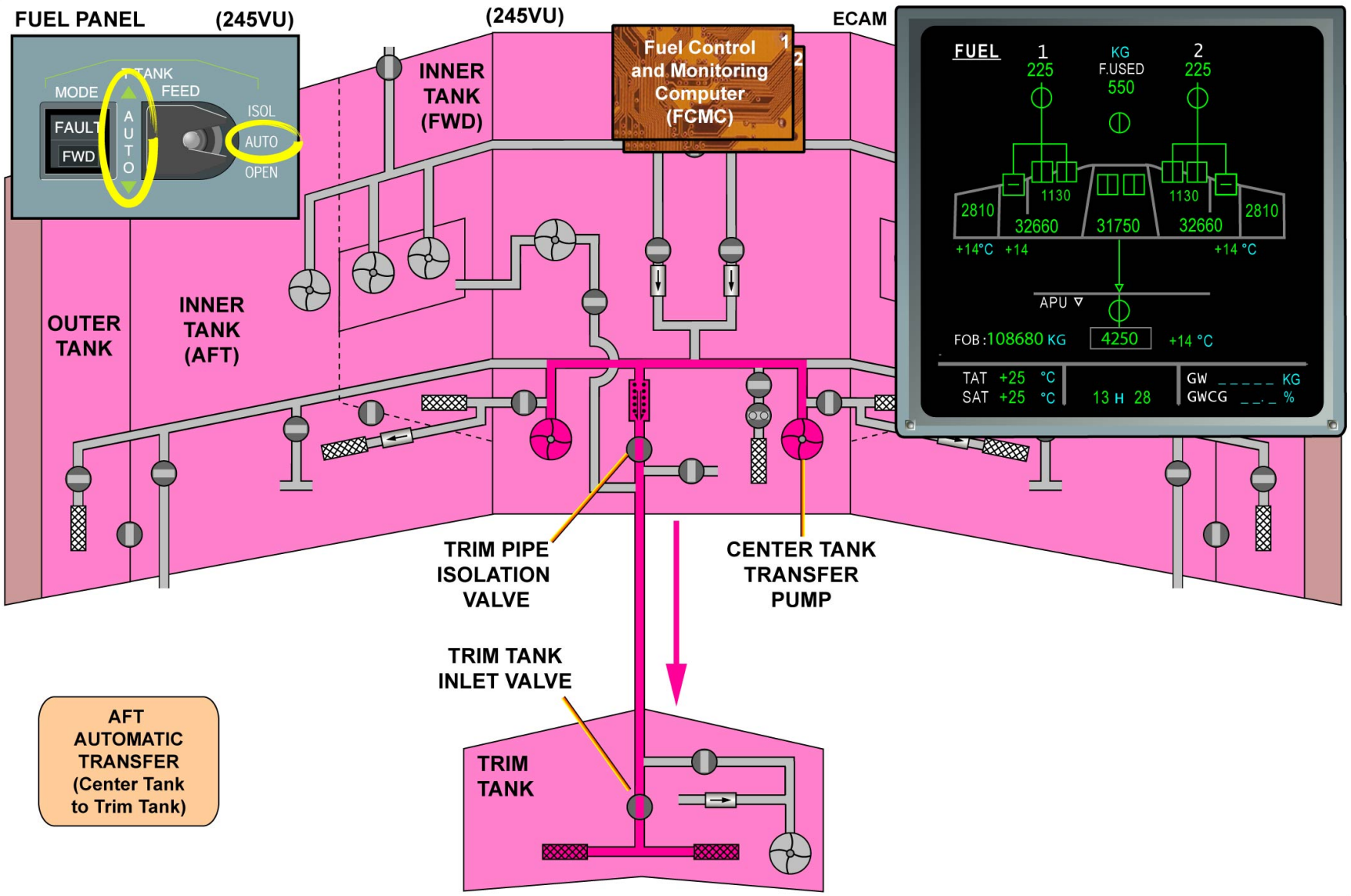

AFT TRANSFER AUTOMATIC OPERATION - CENTER TANK TO TRIM TANK FUEL TRANSFER

G7508471 - G3NT1T0 - FM28D700000003

TRIM TRANSFER D/O (A330-200)

AFT TRANSFER AUTOMATIC OPERATION (continued)

CENTER TO TRIM TRANSFER LOGIC

The aft transfer to the trim tank is done from the center tank if not empty.

G7508471 - G3NT1T0 - FM28D7000000003

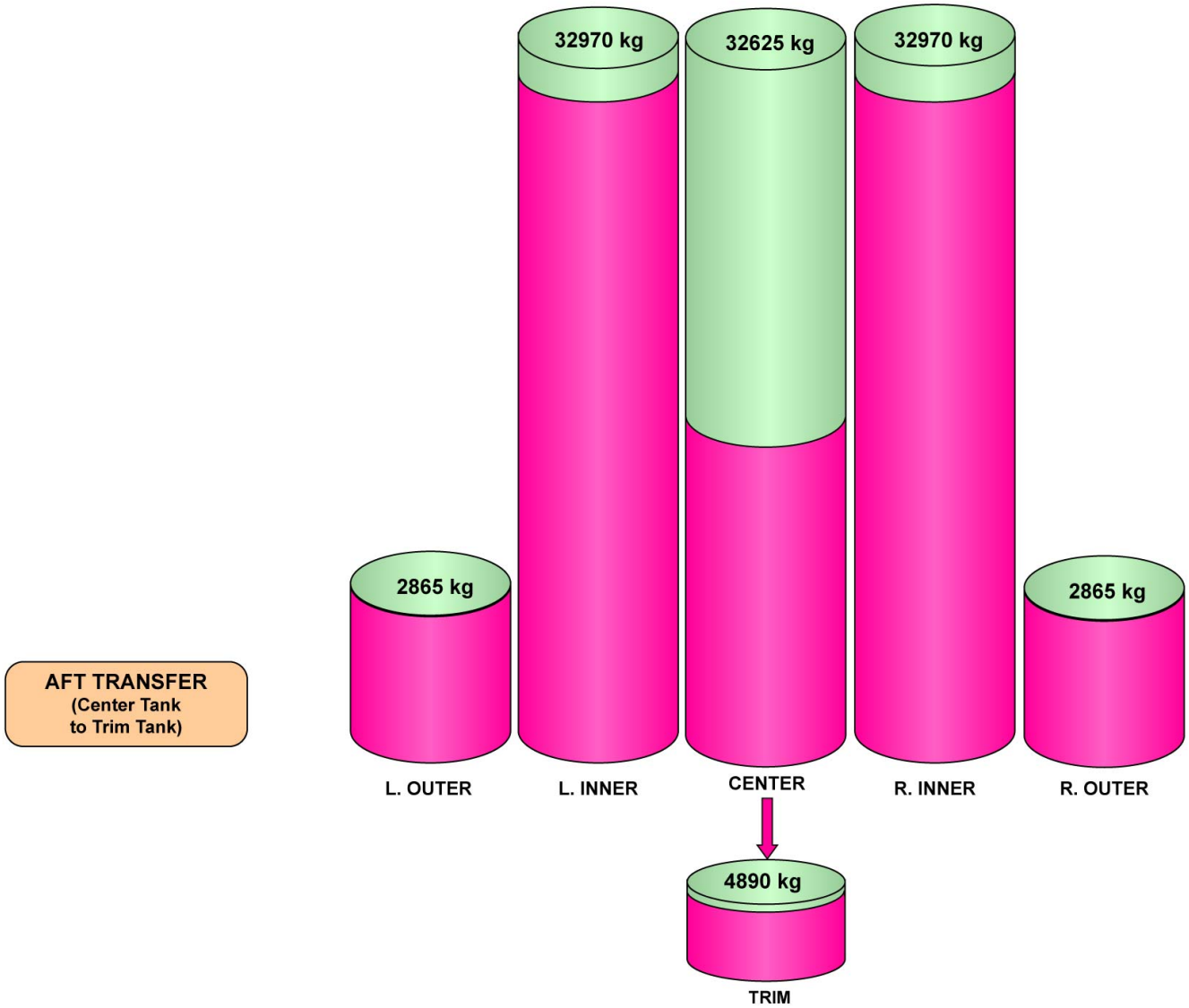

AFT TRANSFER AUTOMATIC OPERATION - CENTER TO TRIM TRANSFER LOGIC

G7508471 - G3NT1T0 - FM28D700000003

TRIM TRANSFER D/O (A330-200)

AFT TRANSFER AUTOMATIC OPERATION (continued)

INNER TANKS TO TRIM TANK TRANSFER

The inner tanks to trim tank transfer uses the fuel pressure of the main pumps, the trim pipe isolation valve and the trim tank inlet valve. When the related inner L1 P/BSW is set to on, the related pump is able to operate. The selection of one of the four fuel pumps switches also gives the FCMCs control of the inner tanks to trim tank fuel transfer. Usually the four P/BSWs are set to on at the same time and, when the FCMCs start an aft transfer, the computers have control of the trim pipe isolation valve and the trim tank inlet valve.
The transfer indication is displayed on the FUEL ECAM page.

G7508471 - G3NT1T0 - FM28D7000000003

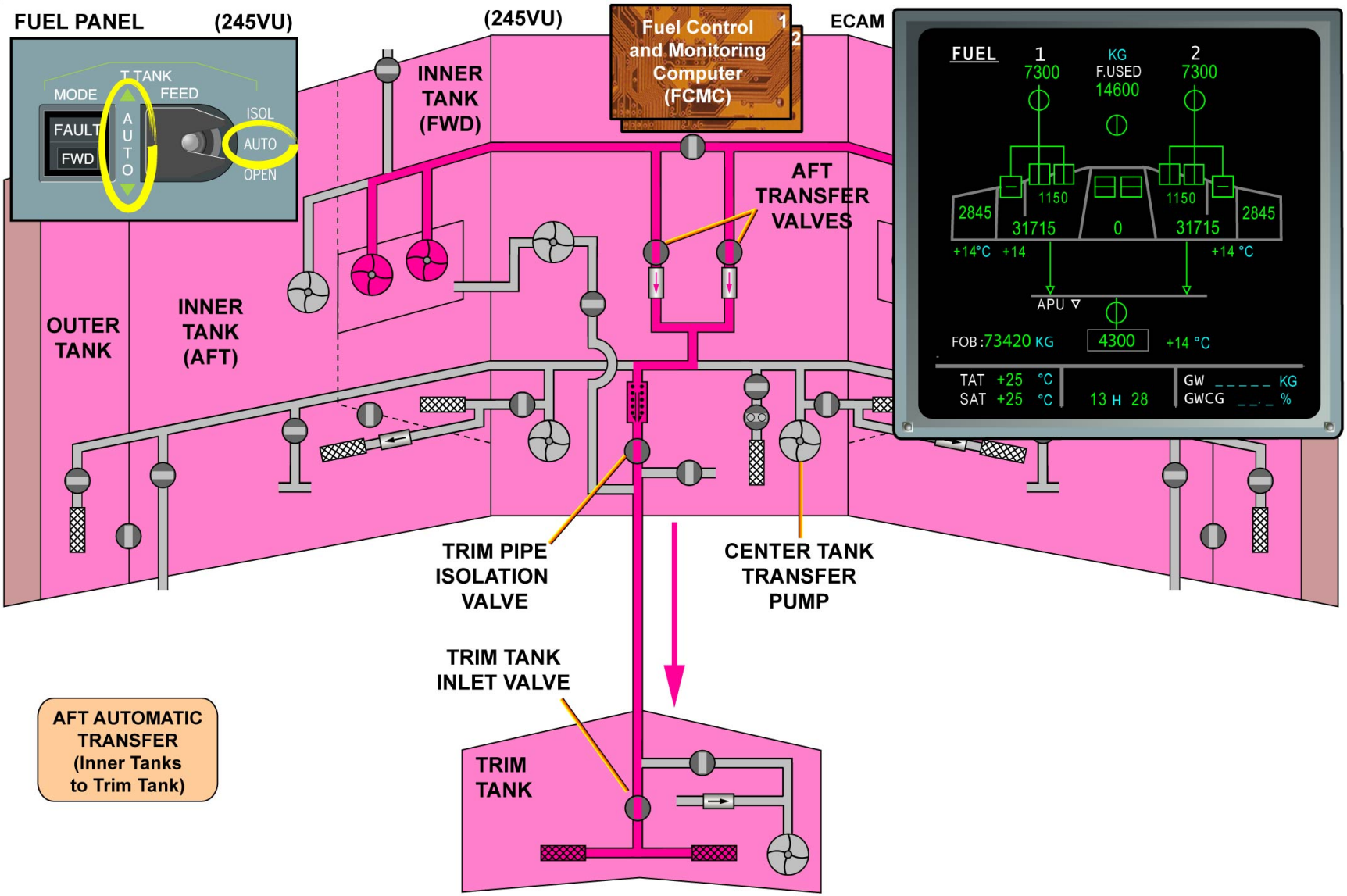

AFT TRANSFER AUTOMATIC OPERATION - INNER TANKS TO TRIM TANK TRANSFER

G7508471 - G3NT1T0 - FM28D700000003

TRIM TRANSFER D/O (A330-200)

AFT TRANSFER AUTOMATIC OPERATION (continued)

INNER TANKS TO TRIM TANK TRANSFER LOGIC

When the center tank is empty and the difference between the inner tanks 1 & 2 is more than 500 kg, the AFT transfer will stop on the lightest side, and the related AFT transfer valve will automatically close until fuel balance is restored.

G7508471 - G3NT1T0 - FM28D7000000003

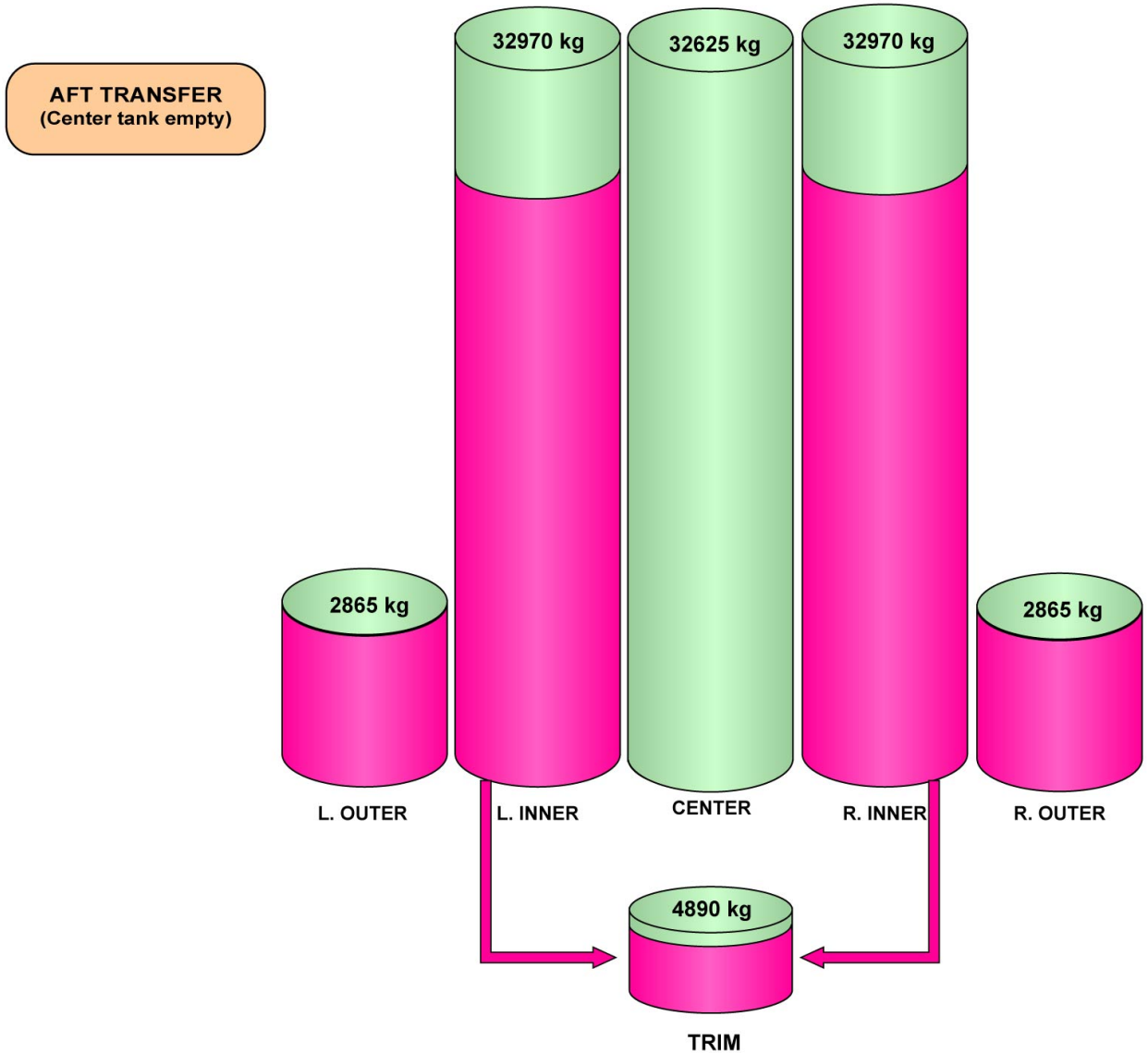

AFT TRANSFER AUTOMATIC OPERATION - INNER TANKS TO TRIM TANK TRANSFER LOGIC

G7508471 - G3NT1T0 - FM28D700000003

TRIM TRANSFER D/O (A330-200)

FWD TRANSFER AUTOMATIC OPERATION

The master FCMC sends a FWD transfer signal if one of these conditions occurs:
- the calculated CG is greater than the target CG (the FWD transfer continues until the calculated CG is less than the target CG minus 0.5% MAC),
- the fuel contents of one of the two inner tanks decrease to 4000 kg,
- the FCMCs receive a 35 minutes to destination signal,
- the jettison system is set to ON,
- the A/C descends below FL 245.

The FWD transfer stops if one of these conditions occurs:
- one of the inner tanks fuel contents increases to 4000 kg,
- when the L/G lever is selected down,
- when the trim tank is empty.

Trim tank empty determination is made following this process:
- when trim tank low level sensors have been detected dry for more than 60 seconds, the FCMC stops the trim tank pump.

G7508471 - G3NT1T0 - FM28D7000000003

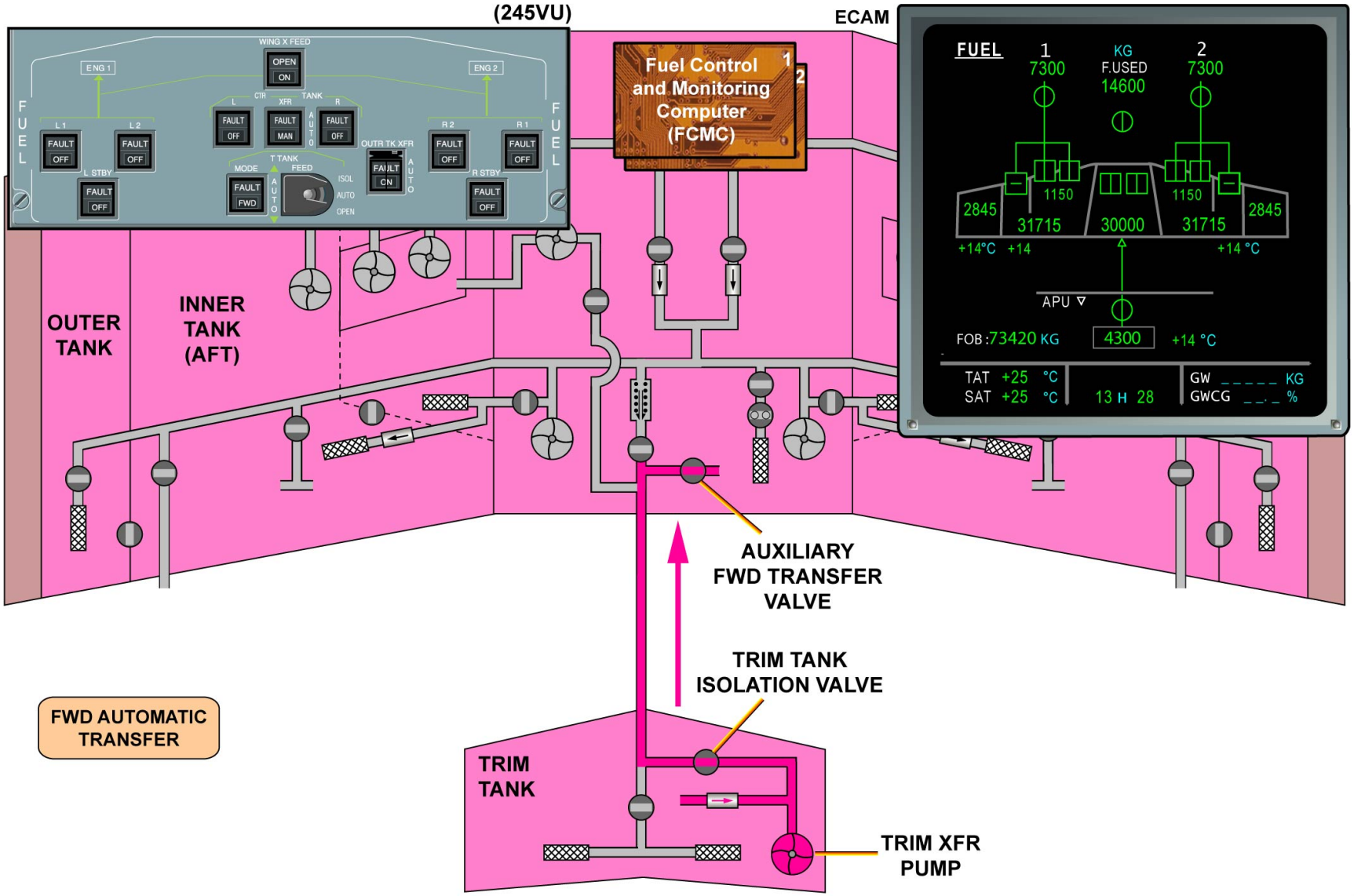

FWD TRANSFER AUTOMATIC OPERATION

G7508471 - G3NT1T0 - FM28D700000003

TRIM TRANSFER D/O (A330-200)

FWD TRANSFER AUTOMATIC OPERATION (continued)

TRIM TANK TO CENTER TANK TRANSFER

If the center tank is not empty, the FWD transfer is from the trim tank to the center tank.
The trim tank to the center tank fuel transfer uses the fuel pressure of the trim transfer pump, the trim tank isolation valve and the auxiliary FWD transfer valve.
When the MODE T TK P/BSW is set to on, the related transfer pump is controlled to operate by the FCMCs for water scavenging purposes, provided the trim tank is not empty. When the FCMCs start a FWD transfer, the computers have control of the trim tank isolation valve and the auxiliary FWD transfer valve.
The transfer indication and pumps status are shown on the FUEL ECAM page.

G7508471 - G3NT1T0 - FM28D7000000003

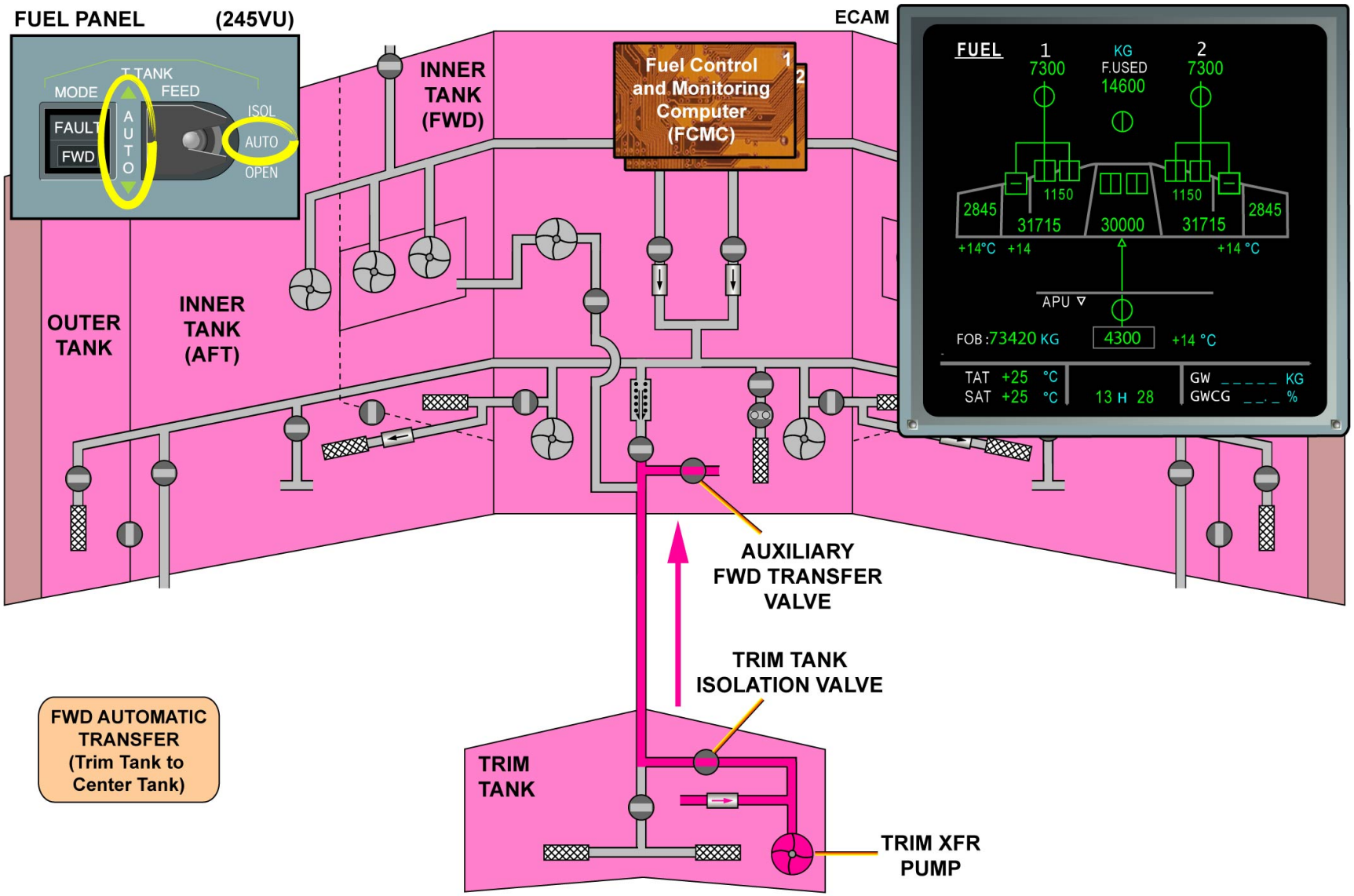

FWD TRANSFER AUTOMATIC OPERATION - TRIM TANK TO CENTER TANK TRANSFER

G7508471 - G3NT1T0 - FM28D700000003

TRIM TRANSFER D/O (A330-200)

FWD TRANSFER AUTOMATIC OPERATION (continued)

TRIM TANK TO CENTER TANK FWD TRANSFER LOGIC

When the center tank is not empty, the FWD transfer is done towards the center tank.

G7508471 - G3NT1T0 - FM28D7000000003

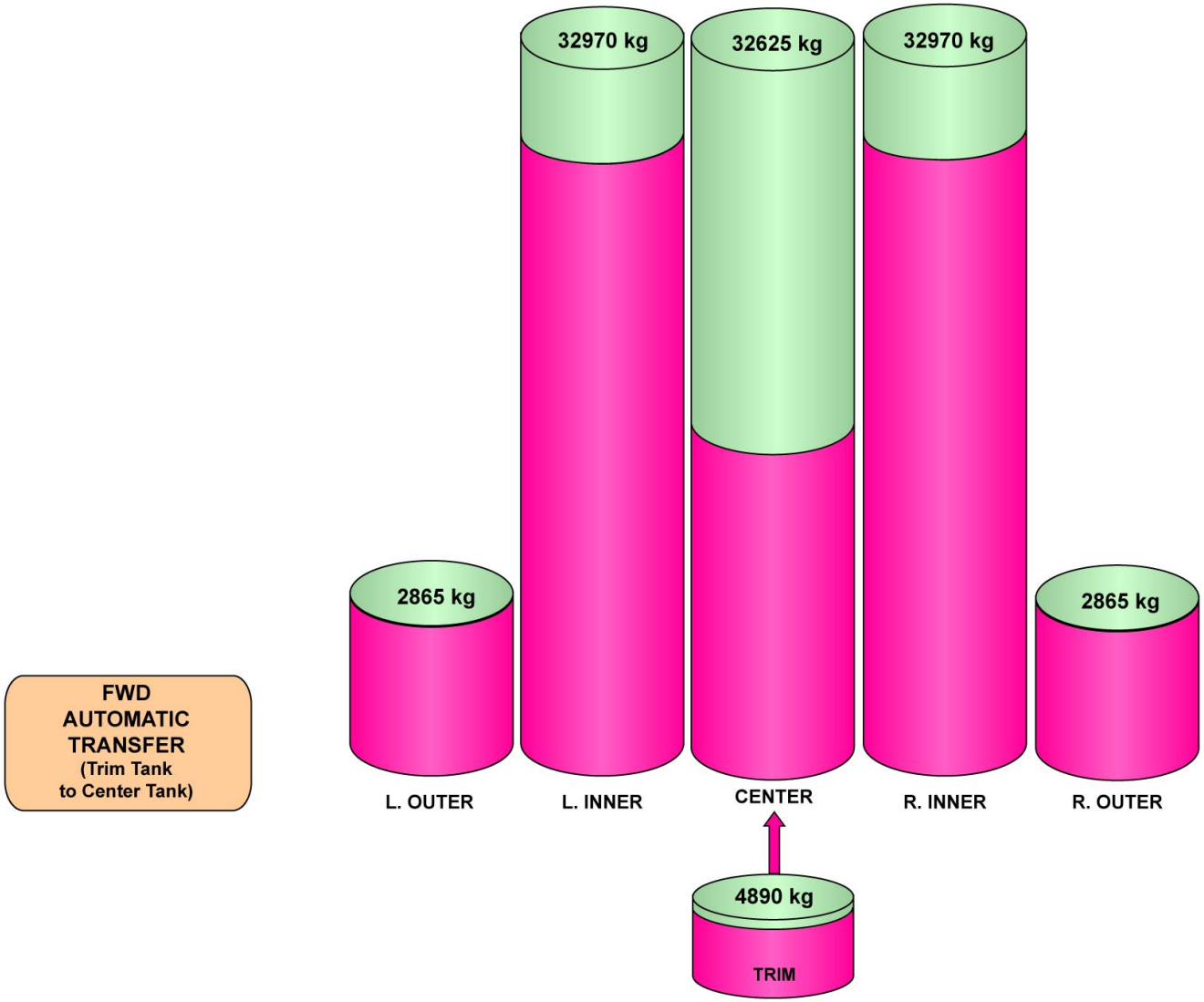

FWD TRANSFER AUTOMATIC OPERATION - TRIM TANK TO CENTER TANK FWD TRANSFER LOGIC

G7508471 - G3NT1T0 - FM28D700000003

TRIM TRANSFER D/O (A330-200)

FWD TRANSFER AUTOMATIC OPERATION (continued)

TRIM TANK TO INNER TANKS TRANSFER

If the center tank is empty, the FWD transfer is from the trim tank to the inner tanks.
It uses the fuel pressure of the trim transfer pump, the trim tank isolation valve, the trim pipe isolation valve, the inner tank transfer valve.
When the T TK MODE P/BSW is set to AUTO, the related trim transfer pump is controlled to operate by the FCMCs for water scavenging purposes, provided the trim tank is not empty. Usually, when the FCMCs start a FWD transfer, the computers have control of the trim tank isolation valve, the trim pipe isolation valve, the auxiliary refuel valve and the inner transfer valves.
The transfer indication and pumps status are shown on the FUEL ECAM page.
The trim transfer pump stops when one of these conditions occurs:
- the aircraft is in flight and the landing gear is extended,
- there is less than 200 kg of fuel in trim tank and the trim tank lo-level sensor id dry for more than 60 seconds,
- the trim transfer pump pressure-switch has low pressure for more than 10 minutes.

G7508471 - G3NT1T0 - FM28D7000000003

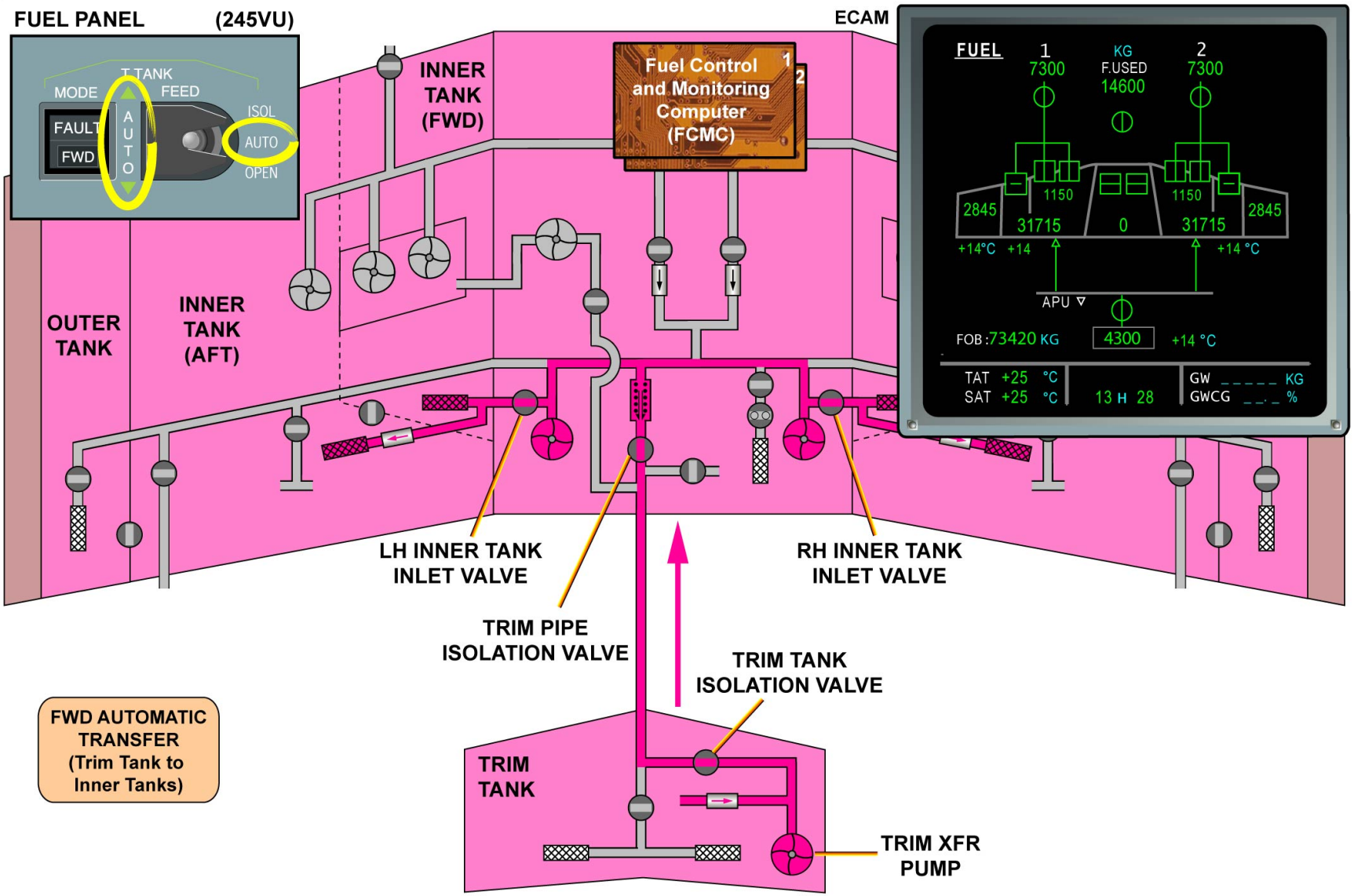

FWD TRANSFER AUTOMATIC OPERATION - TRIM TANK TO INNER TANKS TRANSFER

G7508471 - G3NT1T0 - FM28D700000003

TRIM TRANSFER D/O (A330-200)

FWD TRANSFER AUTOMATIC OPERATION (continued)

TRIM TANK TO INNER TANKS FWD TRANSFER LOGIC

When the center tank is empty, the FWD transfer is done towards the inner tanks.

G7508471 - G3NT1T0 - FM28D7000000003

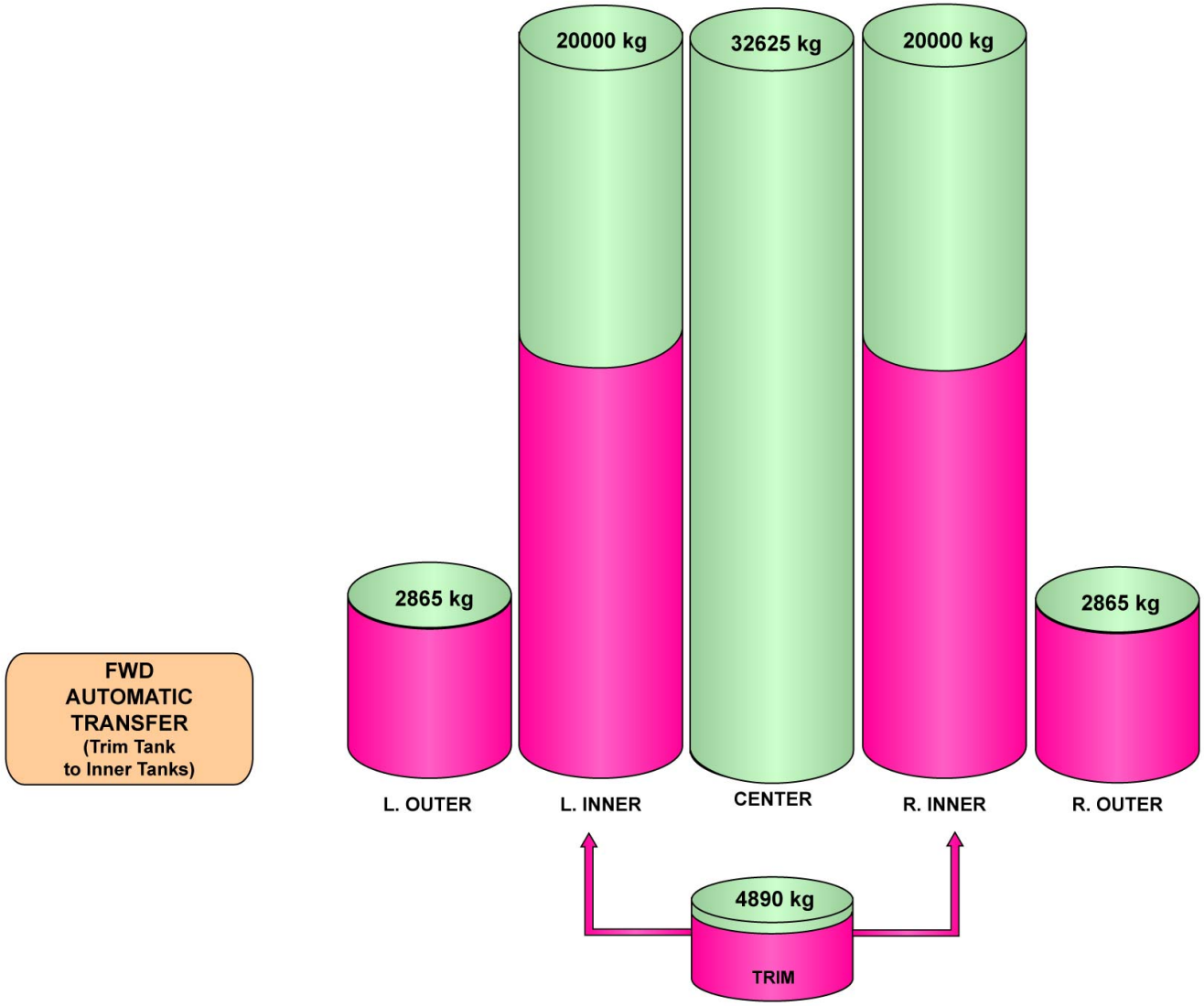

FWD TRANSFER AUTOMATIC OPERATION - TRIM TANK TO INNER TANKS FWD TRANSFER LOGIC

G7508471 - G3NT1T0 - FM28D700000003

TRIM TRANSFER D/O (A330-200)

MANUAL OPERATION

MODE "FWD" P/B SELECTION

When a failure is detected during the automatic CG control the FCMC triggers the FAULT light lighting on the MODE T TK P/BSW.
When the MODE T TK P/BSW is set to FWD, the FWD light comes on white, the automatic FCMC CG control stops and a manual FWD transfer into the center tank starts. The FWD transfer has to be monitored to make sure that the center tank is not overfilled, since the center tank high level protection is not active.
The following components are controlled by wiring:
- the trim transfer pumps to run,
- the trim pipe isolation valve to close,
- the auxiliary FWD transfer and trim tank isolation valves to open.

When the trim tank becomes empty, the trim pumps have to be switched off from the related P/BSWs since automatic shut-off is not active.

G7508471 - G3NT1T0 - FM28D7000000003

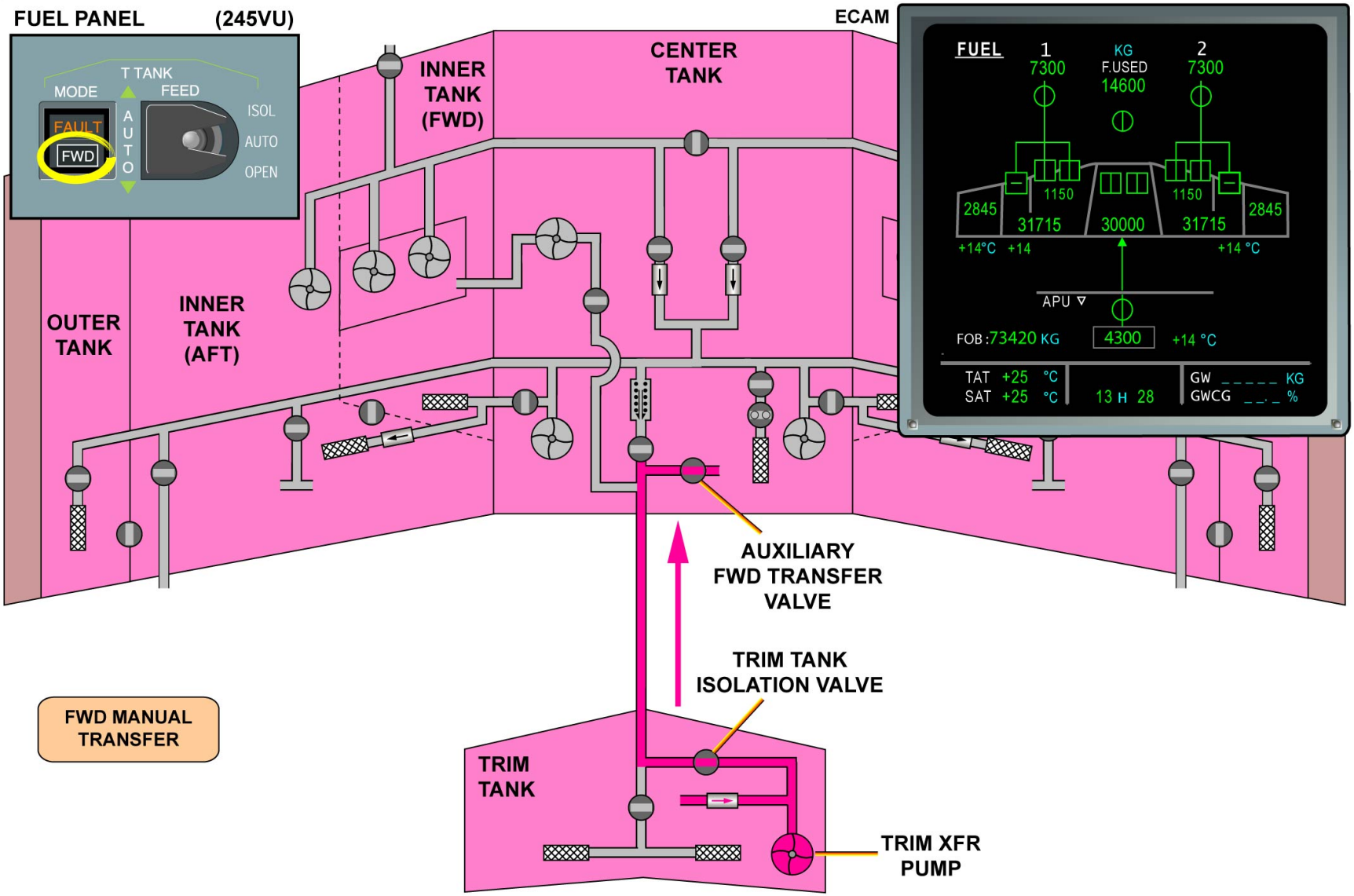

MANUAL OPERATION - MODE "FWD" P/B SELECTION

G7508471 - G3NT1T0 - FM28D700000003

TRIM TRANSFER D/O (A330-200)

MANUAL OPERATION (continued)

TRIM TANK FEED SWITCH SELECTIONS

The T TANK FEED switch has three positions AUTO, ISOL and OPEN.
AUTO is the usual position of the switch, which gives the FCMCs full control of the trim transfer system, provided that the "FWD" mode switch is in the OFF position.
In an abnormal situation, following an ECAM warning, trim transfer system isolation can be requested by selecting the T TK FEED switch to ISOL. In this position, the switch overrides the FCMC trim transfer control and the manual FWD transfer P/BSW.
By the wiring, the following valves are controlled to close:
- the trim tank inlet,
- the trim tank isolation,
- the auxiliary FWD transfer,
- the trim pipe isolation,

causing the trim pipe to be isolated at both ends.

NOTE: Note : If T TK FEED switch is set to ISOL, it is still possible to use the APU.

G7508471 - G3NT1T0 - FM28D7000000003

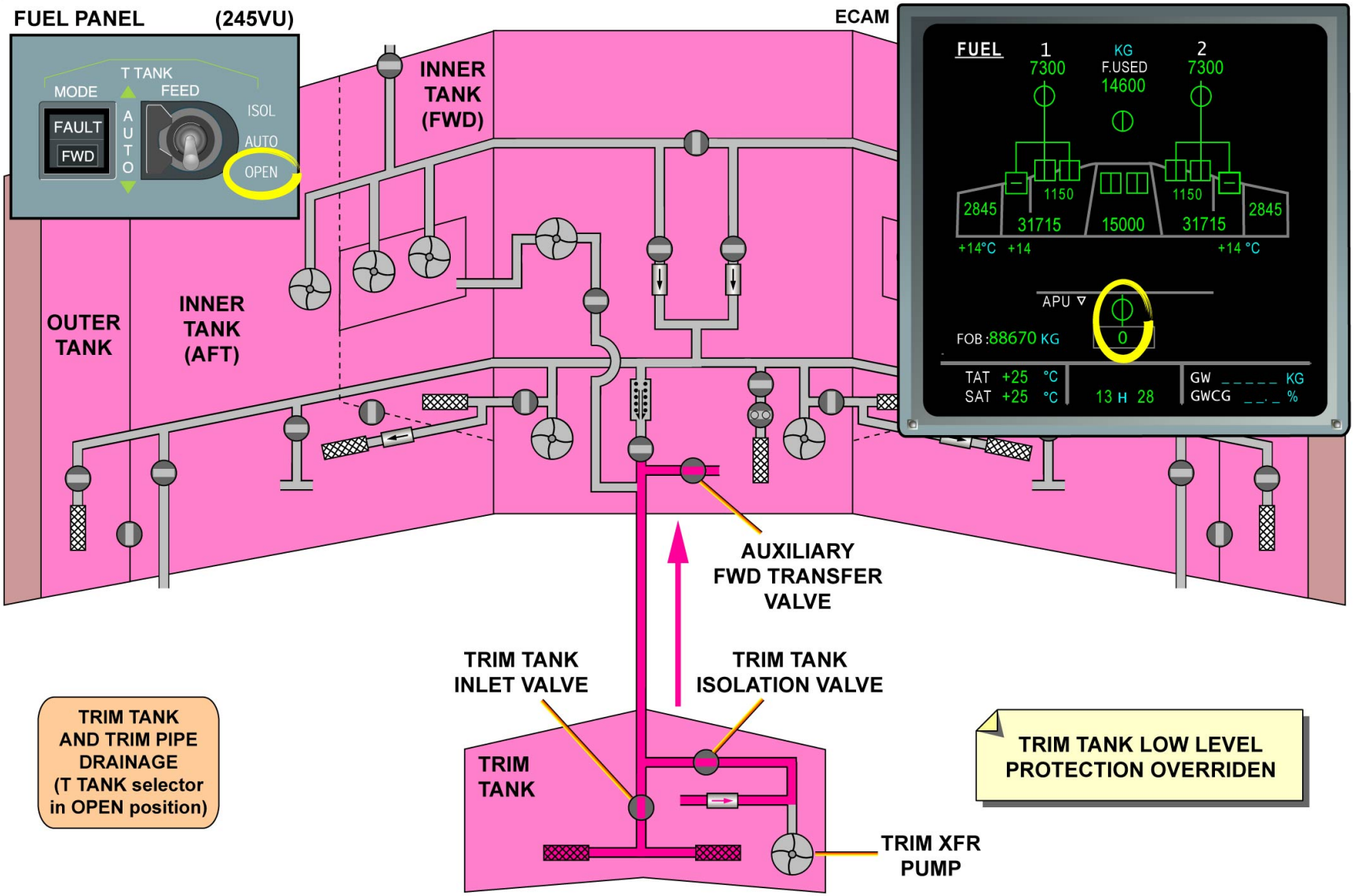

MANUAL OPERATION - TRIM TANK FEED SWITCH SELECTIONS

G7508471 - G3NT1T0 - FM28D700000003

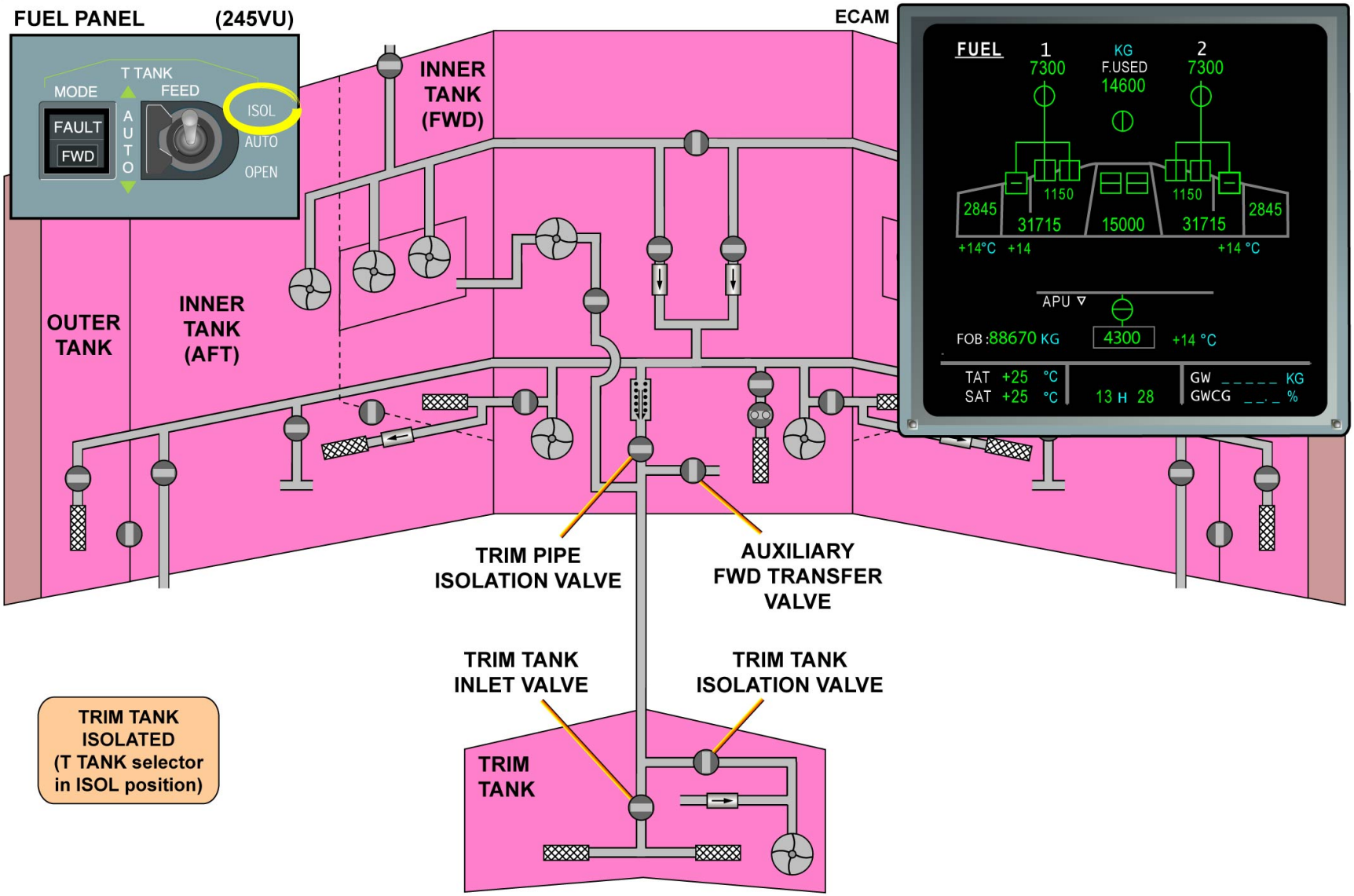

MANUAL OPERATION - TRIM TANK FEED SWITCH SELECTIONS

G7508471 - G3NT1T0 - FM28D700000003

This Page Intentionally Left Blank

G7508471 - G3NT1T0 - FM28D7000000003

TRIM TRANSFER D/O (A330-300)

GENERAL

The trim transfer system controls the Center of Gravity (CG) of the A/C during flight in order to reduce the THS aerodynamic drag and consequently to minimize the fuel consumption.
The Fuel Control and Monitoring Computers (FCMCs) calculate the CG of the A/C and compare the result to a memorized target value. If necessary, the FCMCs then make a decision to move fuel aft or FWD to control the CG. Usually only one aft transfer is made during each flight. But, as the fuel burns, many small FWD transfers are made.
The ECAM gives trim transfer system information to the crew.

G7508471 - G3NT1T0 - FM28D7000000009

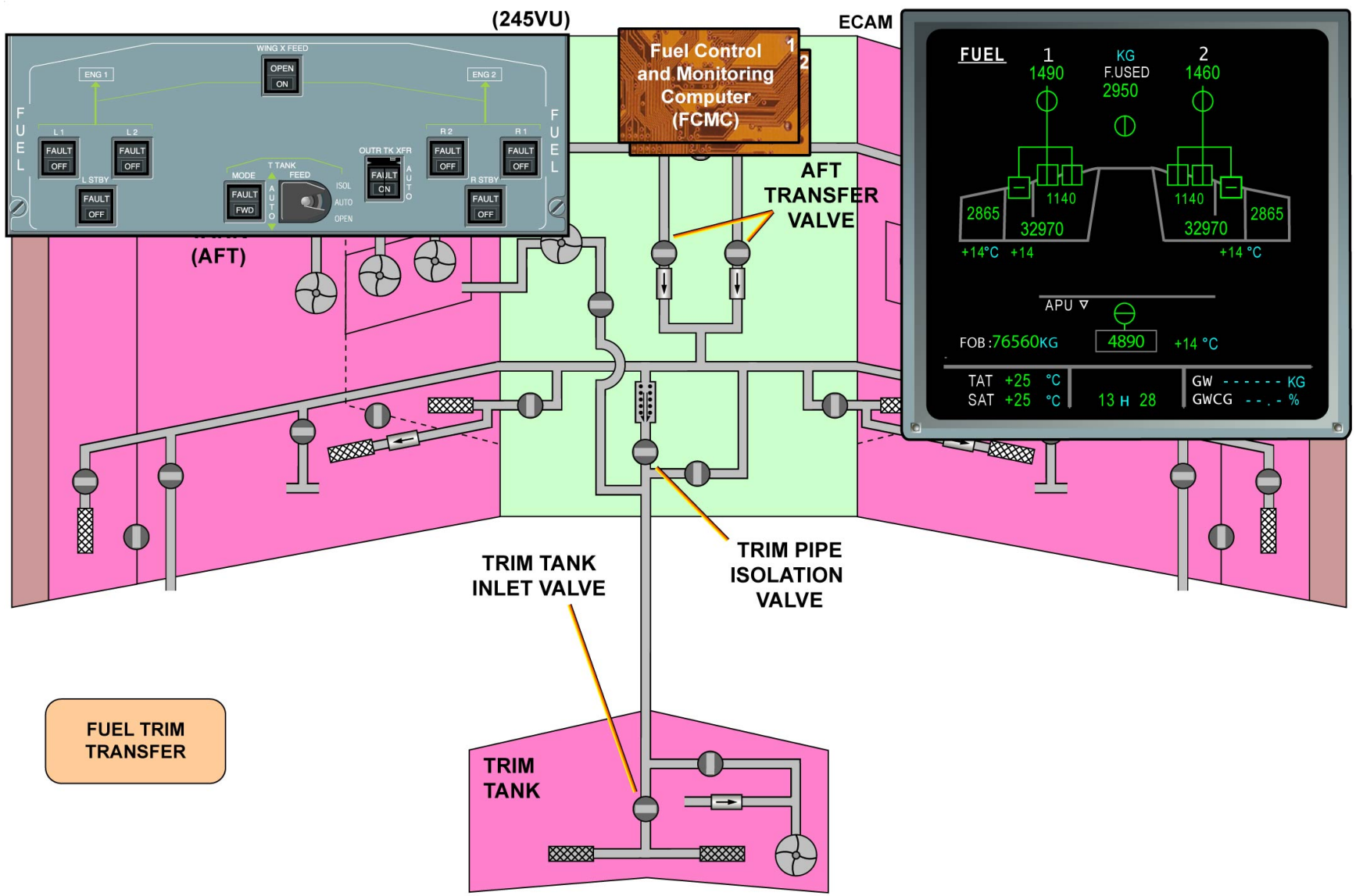

GENERAL

G7508471 - G3NT1T0 - FM28D7000000009

TRIM TRANSFER D/O (A330-300)

DESCRIPTION

TRIM PIPE ISOLATION VALVE, AUXILIARY FORWARD TRANSFER VALVE AND ACTUATORS

A trim pipe isolation valve and an auxiliary FWD transfer valve, both of the ball valve type, are installed in the center tank area and attached to the FWD face of the rear spar in the center tank area. The trim pipe isolation valve is installed at the FWD end of the fuel supply pipe to the trim tank to control all the aft transfers and the FWD transfers to the wings. The auxiliary FWD transfer valve is installed in the trim pipe, in the center fuselage area, to control the fuel flow from the trim tank to the inner tank.
Each one is operated with a single electrical motor actuator attached to the rear face of the center tank rear spar and equipped with a visual position indicator.

TRIM TANK ISOLATION VALVE AND ACTUATOR

A trim tank isolation valve, of the ball valve type, is installed in the fuel line from the trim tank to the trim pipe in order to control the FWD transfer of fuel from the trim tank to the trim pipe. It is installed at the bottom of the trim tank. It is operated with an electrical motor actuator attached to the bottom skin of the trim tank and equipped with a visual position indicator.

TRIM TANK INLET VALVE AND ACTUATOR

A trim tank inlet valve, of the ball valve type, is installed in the fuel supply pipe to the trim tank in order to control the flow of fuel into the trim tank. The valve is in the trim tank and is attached to the bottom skin of the trim tank. It is operated with an electrical motor actuator attached to the bottom skin of the trim tank and equipped with a visual position indicator.

AFT TRANSFER PUMPS AND CANISTERS

The inner tanks pumps supply fuel to the engines, the trim transfer and the jettison system. Each pump is driven by a 3-phase 115 VAC motor and is enclosed in a canister attached to the tank bottom skin. Pumps and canisters are all assembled in the same way and are interchangeable.

TRIM TRANSFER PUMP, PRESSURE SWITCH AND JET PUMPS

The fuel trim transfer pump is installed horizontally and attached to the FWD Right side face of the trim tank. The pump unit is enclosed in a removable sealing case externally bolted onto the trim tank FWD face. The impeller type pump element is driven by a 3-phase 115 VAC motor and installed in the pump housing.
A 6 to 8 psi pump low pressure switch is also installed on the pump housing. Inside the tank, there are 2 outlets on the pump housing which connect the pump to the trim tank and to the trim pipe.

TRANSFER PUMPS CHECK VALVES

The outlet pipe from the fuel transfer pump contains a check valve. It prevents an opposite fuel flow through the pump when it is not in operation.

TRIM TRANSFER PUMP PRESSURE SWITCH

The trim transfer pump has an output monitoring LP switch which operates between 6 and 8 psi depending on pressure increase or decrease.

G7508471 - G3NT1T0 - FM28D7000000009

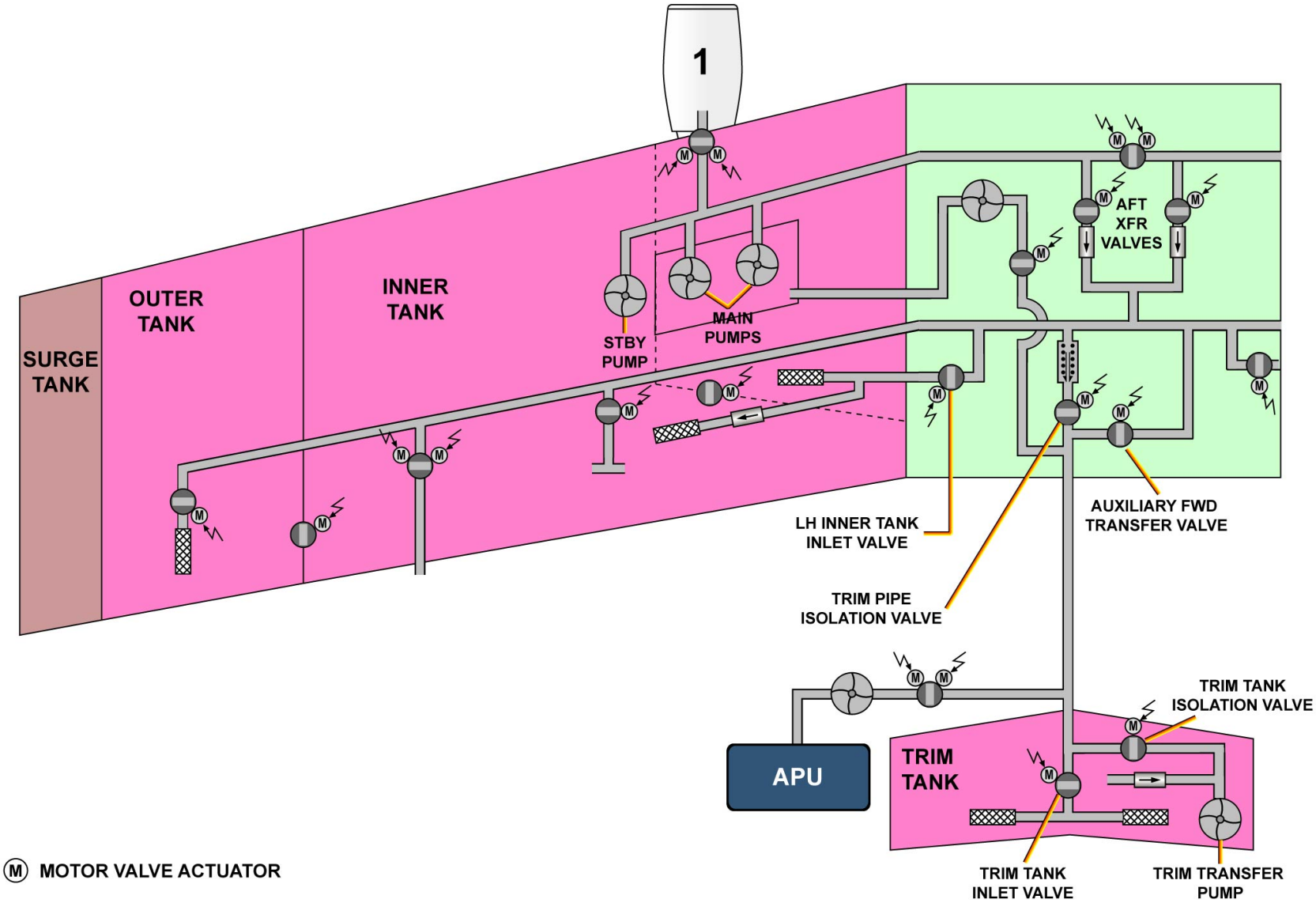

DESCRIPTION - TRIM PIPE ISOLATION VALVE, AUXILIARY FORWARD TRANSFER VALVE AND ACTUATORS ... TRIM TRANSFER PUMP PRESSURE SWITCH

TRIM TRANSFER D/O (A330-300)

TRIM TRANSFER CONTROL

Before each flight, the crew inputs the A/C Zero Fuel Center of Gravity (ZFCG) and Zero Fuel Weight (ZFW) data into the Flight Management Guidance and Envelope Computers (FMGECs) via the MCDU. The two FMGECs independently transmit this data to the FCMCs.
Each FCMC uses the ZFW from the FMGECs and the tanks fuel weight to calculate the A/C Gross Weight (GW). This GW is output to the ECAM FUEL page, and is used, in the FCMCs, to obtain the target CG from the memorized CG versus percentage of Mean Aerodynamic Chord (MAC) CG table.
In the same time, the FCMCs calculate the fuel weight CG using the FQI, the pitch, roll and acceleration data from the Air Data Inertial Reference Units (ADIRUs) 1 and 2, and the THS position from the Flight Control Data Concentrators (FCDCs). Then, with the ZFWCG transmitted by the FMGECs and the fuel weight CG, the FCMCs calculate the Gross Weight Center of Gravity (GWCG). This GWCG is output to the ECAM FUEL page. The FCMCs, in their transfer logic part, compare the GWCG with the target CG to determine if a FWD transfer or an aft transfer is needed.
CG control during automatic operation:
The FMGEC independently monitors the CG of the A/C. If it detects that the A/C CG is too far aft, it sends a signal "CG target FWD" to the FCMCs. The master FCMC moves the target CG forward 2.0% MAC. This is latched until the end of the flight. If the FMGEC detects that the CG is still aft of the new target CG, it sends a signal to the FCMCs. The FCMCs then move the target CG forward 0.5% MAC for 10 minutes. After 10 minutes the system goes back to normal operation.
This procedure can occur twice more until the target CG is first 4.0% then 6.0% MAC forward of the initial position.
If the error is detected again, the FCMC stops the CG control and shows an ECAM warning to the crew. The crew then manually sets a forward transfer.

G7508471 - G3NT1T0 - FM28D7000000009

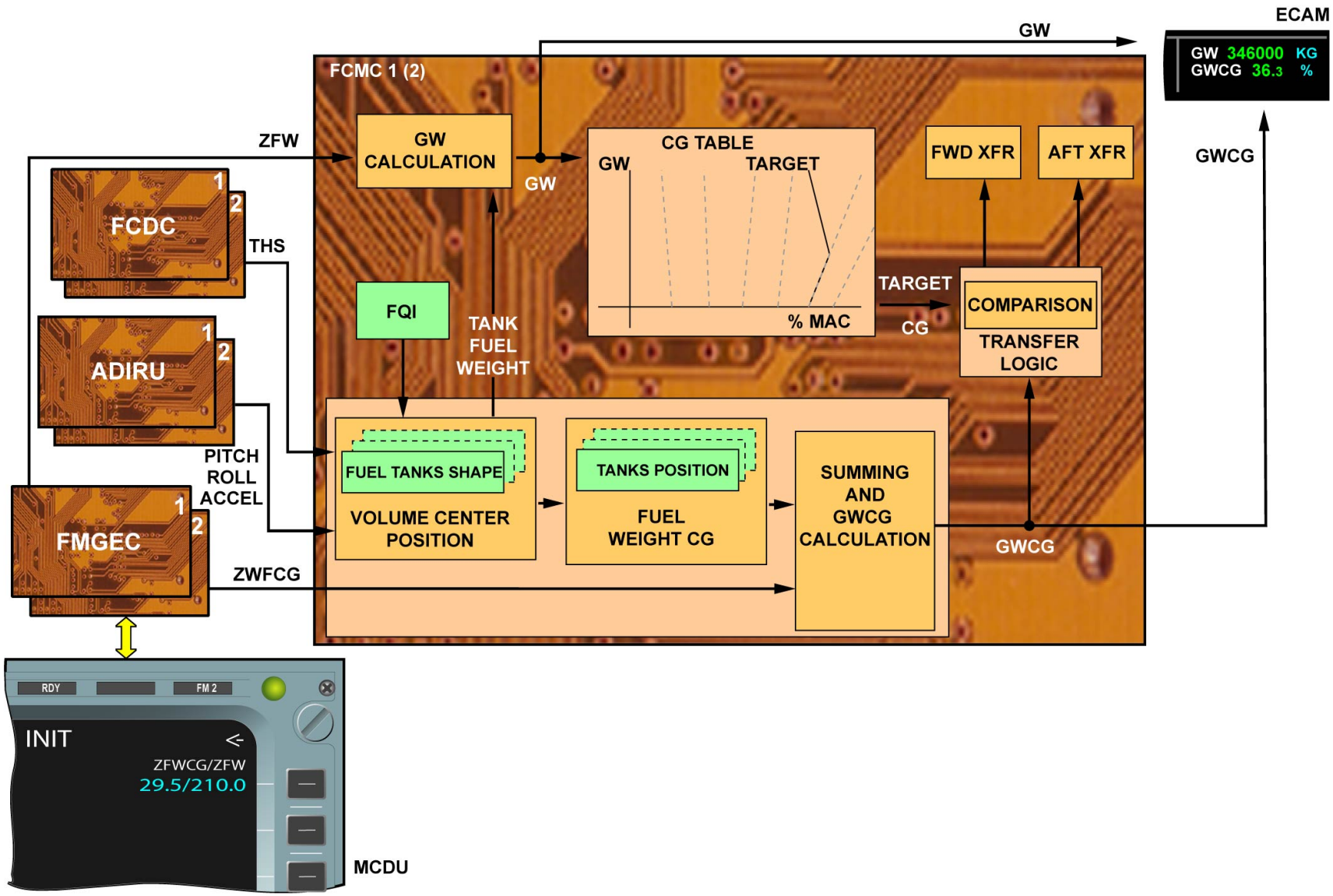

TRIM TRANSFER CONTROL

G7508471 - G3NT1T0 - FM28D7000000009

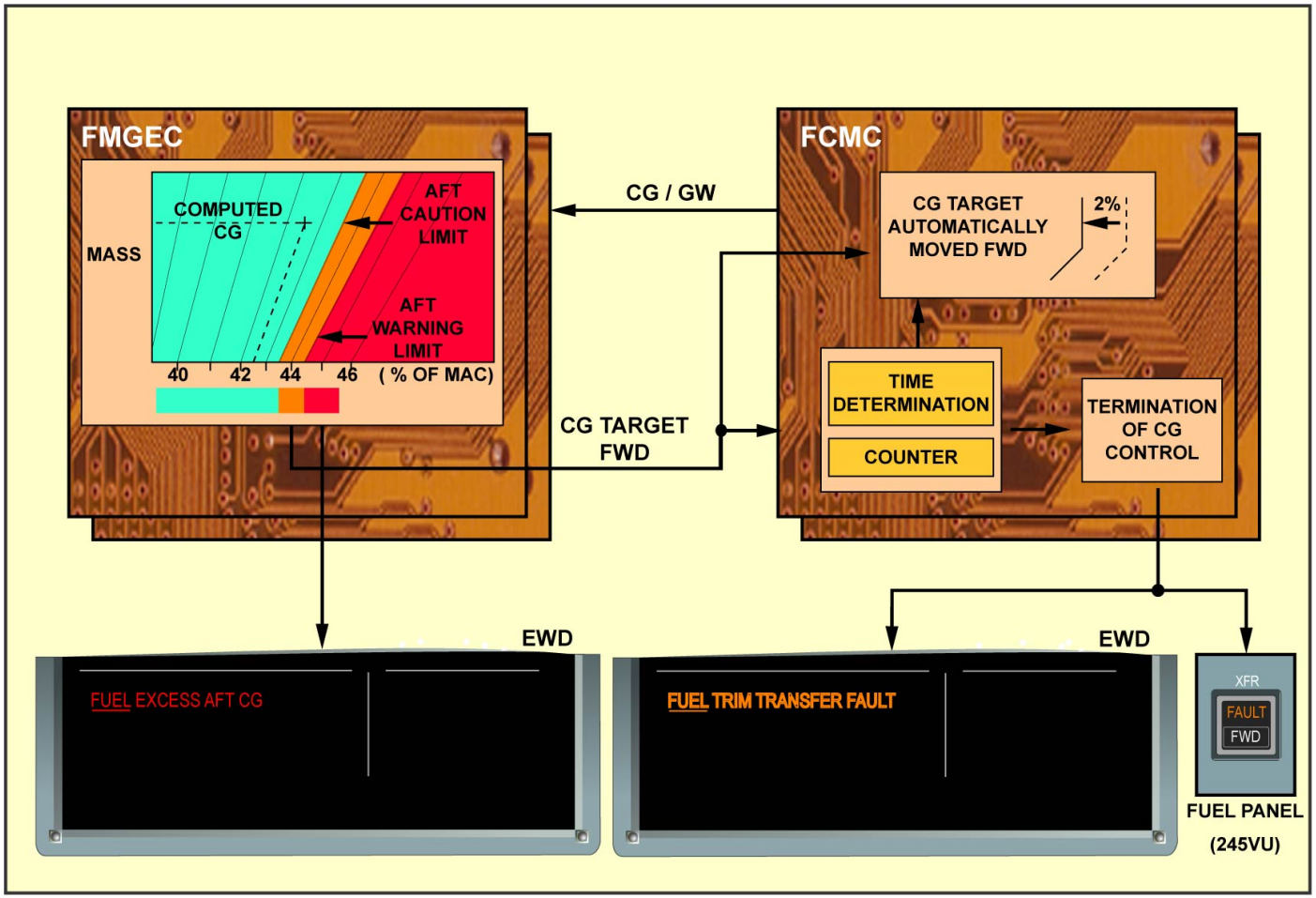

TRIM TRANSFER CONTROL

This Page Intentionally Left Blank

G7508471 - G3NT1T0 - FM28D7000000009

TRIM TRANSFER D/O (A330-300)

AFT TRANSFER AUTOMATIC OPERATION

The master FCMC has full control of the A/C CG when the A/C is above FL255, until the A/C descends below FL245. An aft transfer can only start when all of these conditions occur at the same time:
- the calculated CG is less than the target CG minus a constant moment,
- the L/G is retracted,
- the slats are retracted,
- the trim tank is not full,
- an aft transfer is not prevented,
- the inner tanks fuel contents are more than 6250 kg.

The aft transfer stops if one of these conditions occur:
- the trim tank becomes full,
- the calculated CG is greater than the target CG by 0.5% MAC,
- the fuel quantity in the inner tank decreases to less than 6250 kg,
- the T TK FEED switch is not on AUTO,
- the crew sets the T TANK MODE P/BSW to FWD,
- the jettison system is set to ON,
- the CTR TANK XFR P/BSW is set to MAN,
- the OUTER TK XFR P/BSW is set to MAN,
- the A/C descends below FL245,
- the time-to-destination is less than 35 minutes.
- the FQI system shows fuel in the trim surge tank,
- the FQI system shows fuel in the wing surge tank,

Usually only one aft transfer is made during each flight. This transfer stops when the aft CG target is reached or the trim tank is full.

G7508471 - G3NT1T0 - FM28D7000000009

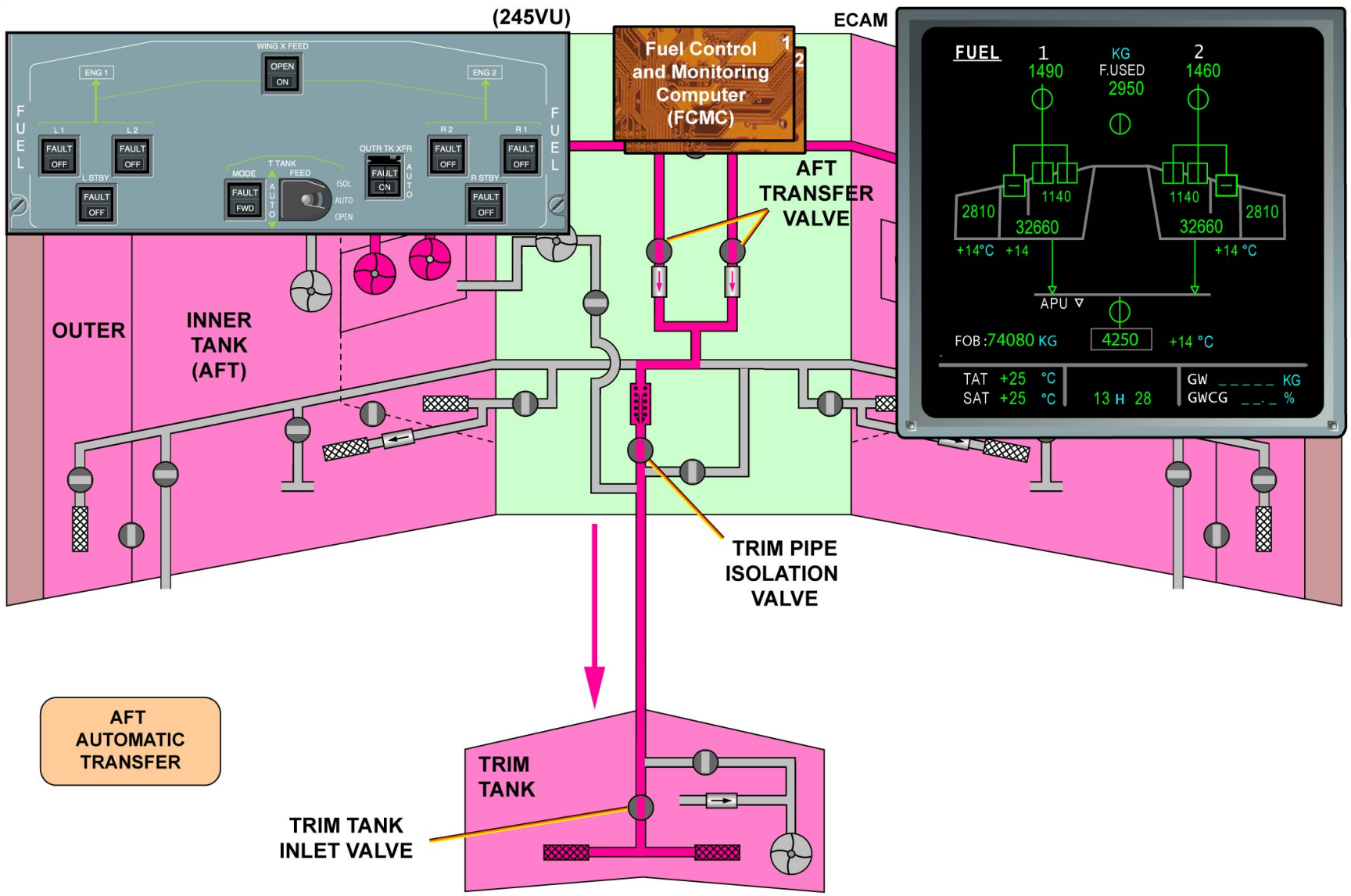

AFT TRANSFER AUTOMATIC OPERATION

G7508471 - G3NT1T0 - FM28D7000000009

TRIM TRANSFER D/O (A330-300)

AFT TRANSFER AUTOMATIC OPERATION (continued)

INNER TANKS TO TRIM TANK TRANSFER

The inner tanks to trim tank transfer uses the fuel pressure of the main pumps, the trim pipe isolation valve and the trim tank inlet valve. When the related inner L1 P/BSW is set to on, the related transfer pump is able to operate. The selection of one of the four main fuel pump P/B switches also gives the FCMCs control of the inner tanks to trim tank fuel transfer. Usually the four P/BSWs are set to on at the same time and, when the FCMCs start an aft transfer, the computers have control of the trim pipe isolation valve and the trim tank inlet valve.
The transfer indication is shown on the FUEL ECAM page.

G7508471 - G3NT1T0 - FM28D7000000009

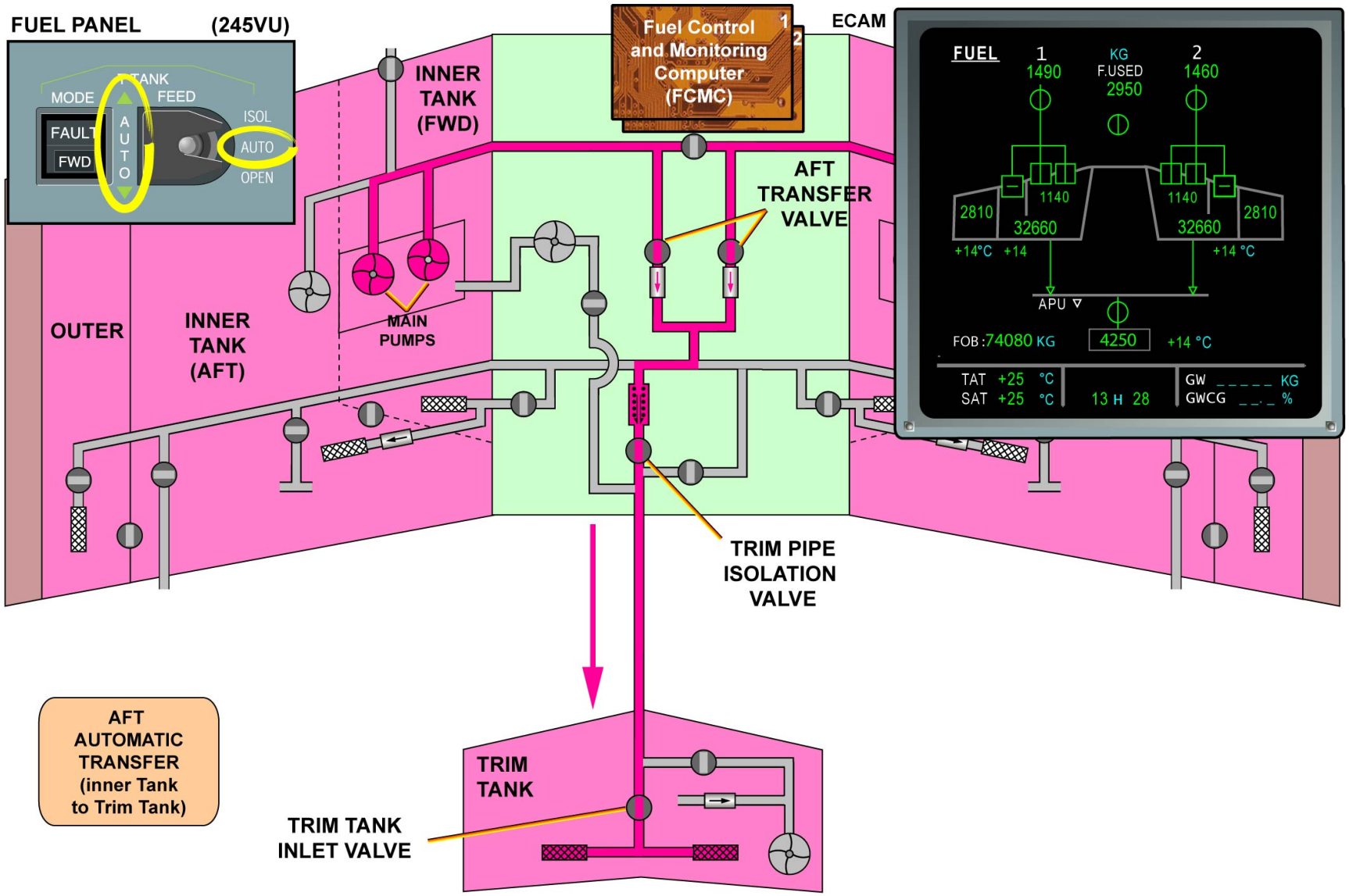

AFT TRANSFER AUTOMATIC OPERATION - INNER TANKS TO TRIM TANK TRANSFER

G7508471 - G3NT1T0 - FM28D7000000009

TRIM TRANSFER D/O (A330-300)

AFT TRANSFER AUTOMATIC OPERATION (continued)

INNER TANKS TO TRIM TANK TRANSFER LOGIC

When the difference between the inner tanks 1 & 2 is more than 500 kg, the AFT transfer will stop on the lightest side, and the related AFT transfer valve will automatically close until fuel balance is restored.

G7508471 - G3NT1T0 - FM28D7000000009

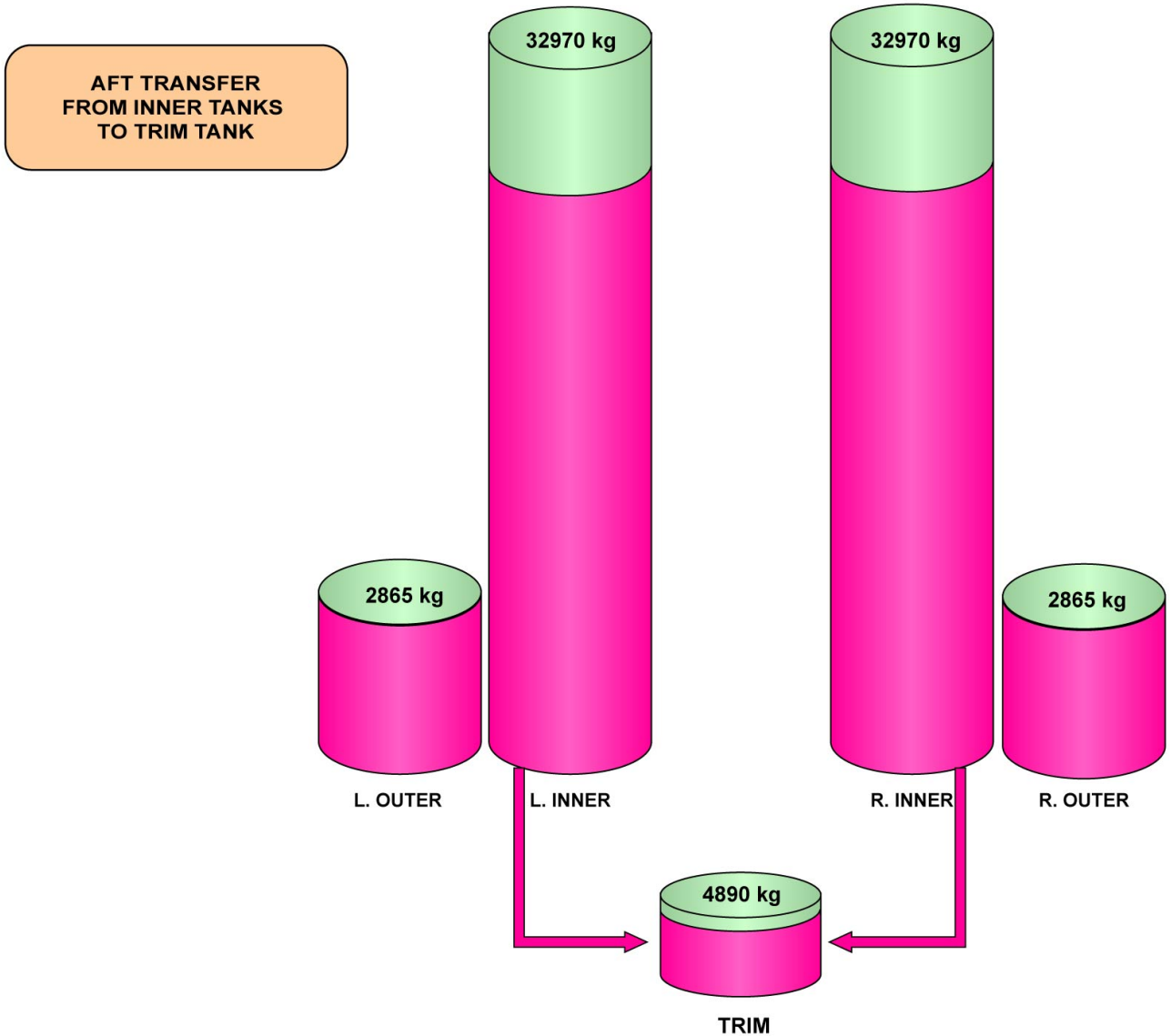

AFT TRANSFER AUTOMATIC OPERATION - INNER TANKS TO TRIM TANK TRANSFER LOGIC

G7508471 - G3NT1T0 - FM28D7000000009

TRIM TRANSFER D/O (A330-300)

FWD TRANSFER AUTOMATIC OPERATION

The master FCMC sends a FWD transfer signal if one of these conditions occurs:
- the calculated CG is greater than the target CG (the FWD transfer continues until the calculated CG is less than the target CG minus 0.5% MAC),
- the fuel contents of one of the two inner tanks decrease to 4000 kg,
- the FCMCs receive a 35 minutes to destination signal,
- the A/C descends below FL 245.

The FWD transfer stops if one of these conditions occurs:
- one of the inner tanks fuel contents increases to 4000 kg,
- when the L/G lever is selected down,
- when the trim tank is empty.

Trim tank empty determination is made following this process:
- when the low level sensor in the trim tank becomes dry, the FCMC stops the trim tank pump.

G7508471 - G3NT1T0 - FM28D7000000009

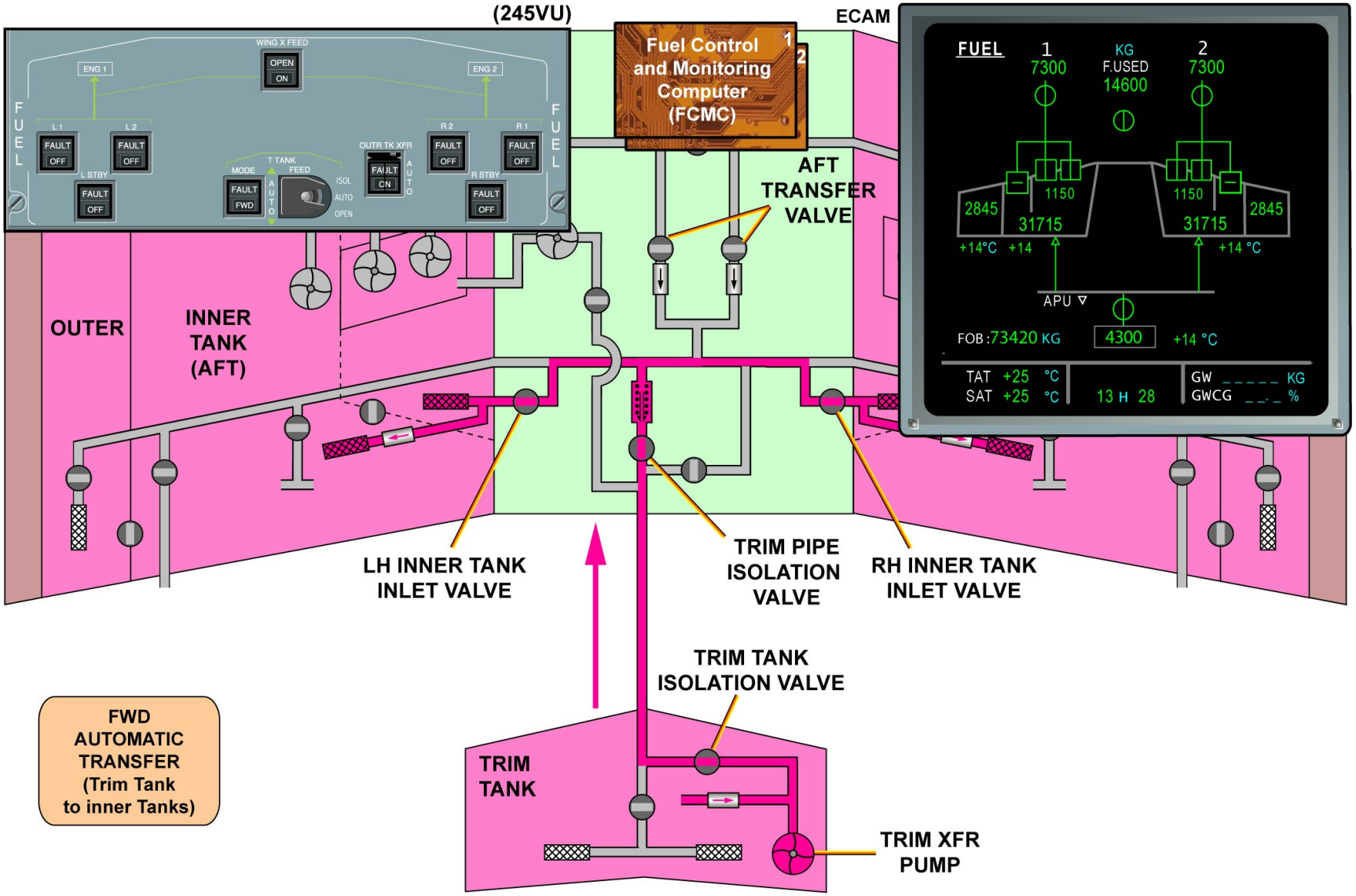

FWD TRANSFER AUTOMATIC OPERATION

G7508471 - G3NT1T0 - FM28D700000009

TRIM TRANSFER D/O (A330-300)

FWD TRANSFER AUTOMATIC OPERATION (continued)

TRIM TANK TO INNER TANKS TRANSFER

The FWD transfer is from the trim tank to the inner tanks.
It uses the fuel pressure of the trim transfer pump, the trim tank isolation valve, the trim pipe isolation valve, the inner tank transfer valve.
When the T TK MODE P/BSW is set to AUTO, the related trim transfer pump is controlled to operate by the FCMCs for water scavenging purposes, provided the trim tank is not empty. Usually, when the FCMCs start a FWD transfer, the computers have control of the trim tank isolation valve, the trim pipe isolation valve and the inner tanks inlet valves.
The transfer indication and pumps status are shown on the FUEL ECAM page.
The trim transfer pump stops when one of these conditions occurs:
- the aircraft is in flight and the landing gear is extended,
- there is less than 200 kg of fuel in trim tank and the trim tank lo-level sensor id dry for more than 60 seconds,
- the trim transfer pump pressure-switch has low pressure for more than 10 minutes.

G7508471 - G3NT1T0 - FM28D7000000009

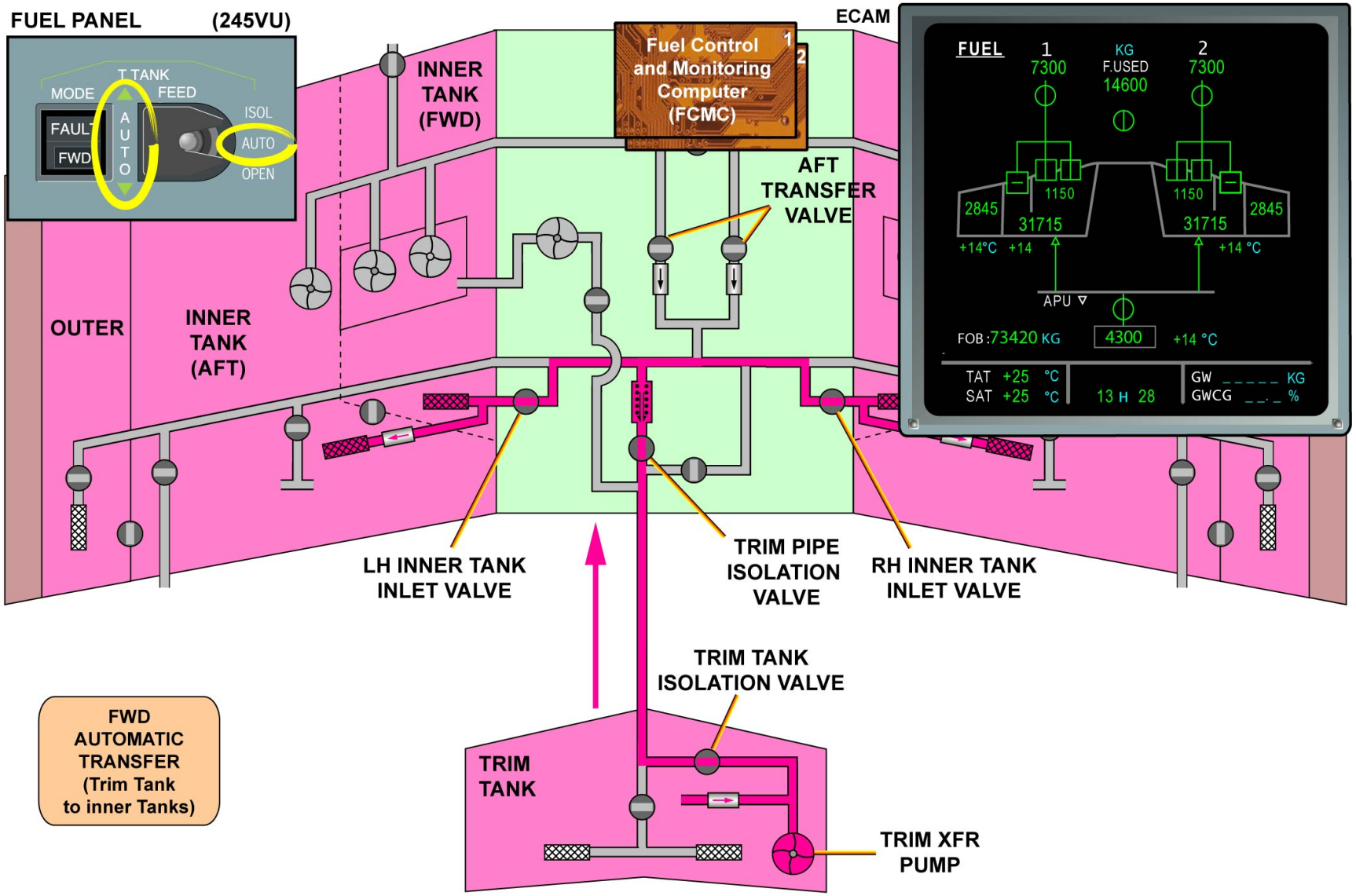

FWD TRANSFER AUTOMATIC OPERATION - TRIM TANK TO INNER TANKS TRANSFER

G7508471 - G3NT1T0 - FM28D7000000009

TRIM TRANSFER D/O (A330-300)

FWD TRANSFER AUTOMATIC OPERATION (continued)

TRIM TANK TO INNER TANKS FWD TRANSFER LOGIC

When the inner tanks are not empty, the FWD transfer is done towards the inner tanks.

G7508471 - G3NT1T0 - FM28D7000000009

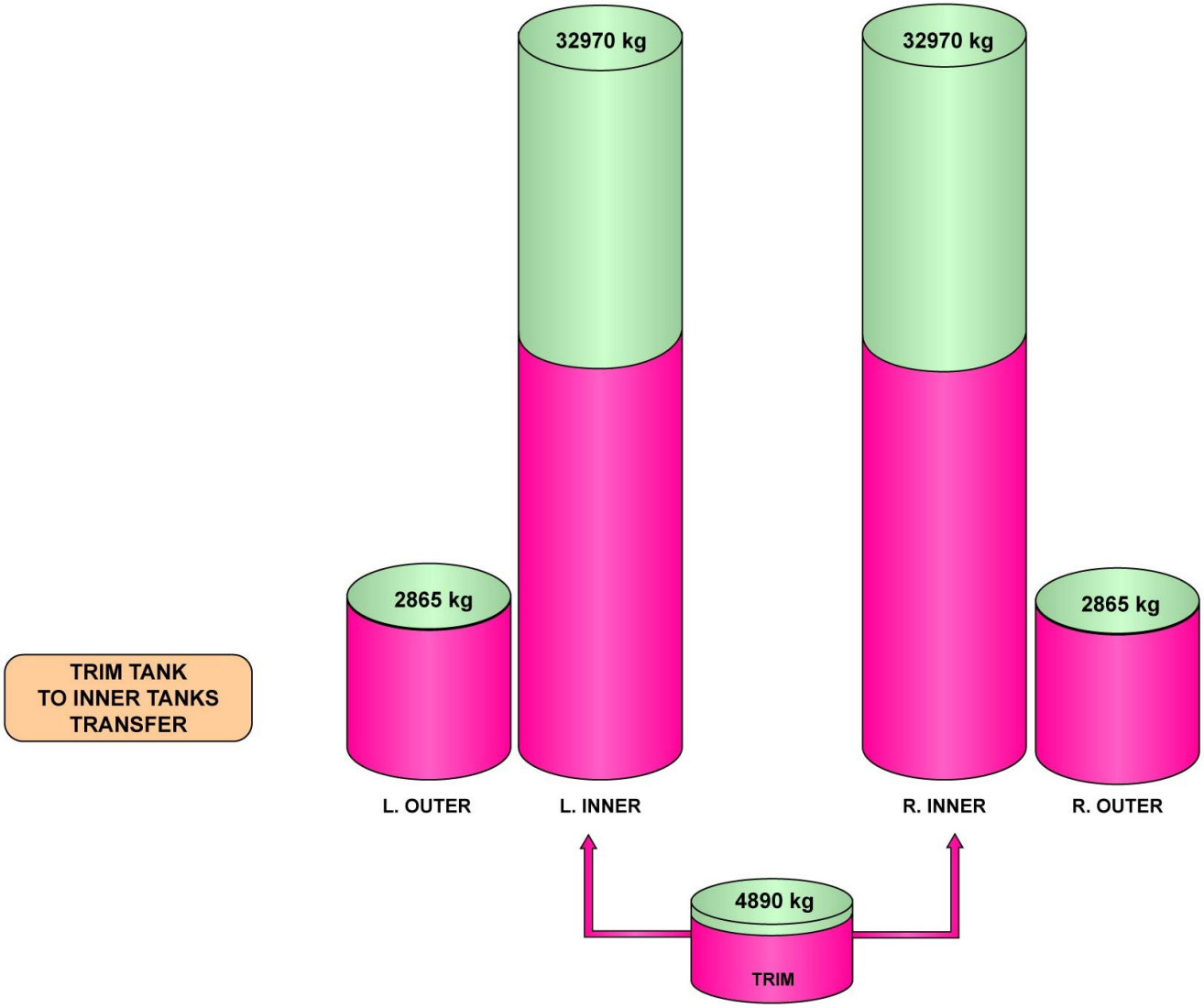

FWD TRANSFER AUTOMATIC OPERATION - TRIM TANK TO INNER TANKS FWD TRANSFER LOGIC

G7508471 - G3NT1T0 - FM28D7000000009

TRIM TRANSFER D/O (A330-300)

MANUAL OPERATION

MODE "FWD" P/B SELECTION

When a failure is detected during the automatic CG control the FCMC triggers the FAULT light illumination on the MODE T TK P/BSW.
When the MODE T TK P/BSW is set to FWD, the FWD light comes on white, the automatic FCMC CG control stops and a manual FWD transfer into the inner tanks starts. The FWD transfer has to be monitored to make sure that the inner tanks are not overfilled, since the inner tanks high level protection is not active.
The following components are controlled by wiring:
- the trim transfer pumps to run,
- the trim pipe isolation valve to close,
- the auxiliary FWD transfer and trim tank isolation valves to open.

When the trim tank becomes empty, the trim pump has to be switched off from the related P/BSWs since automatic shut-off is not active.

G7508471 - G3NT1T0 - FM28D7000000009

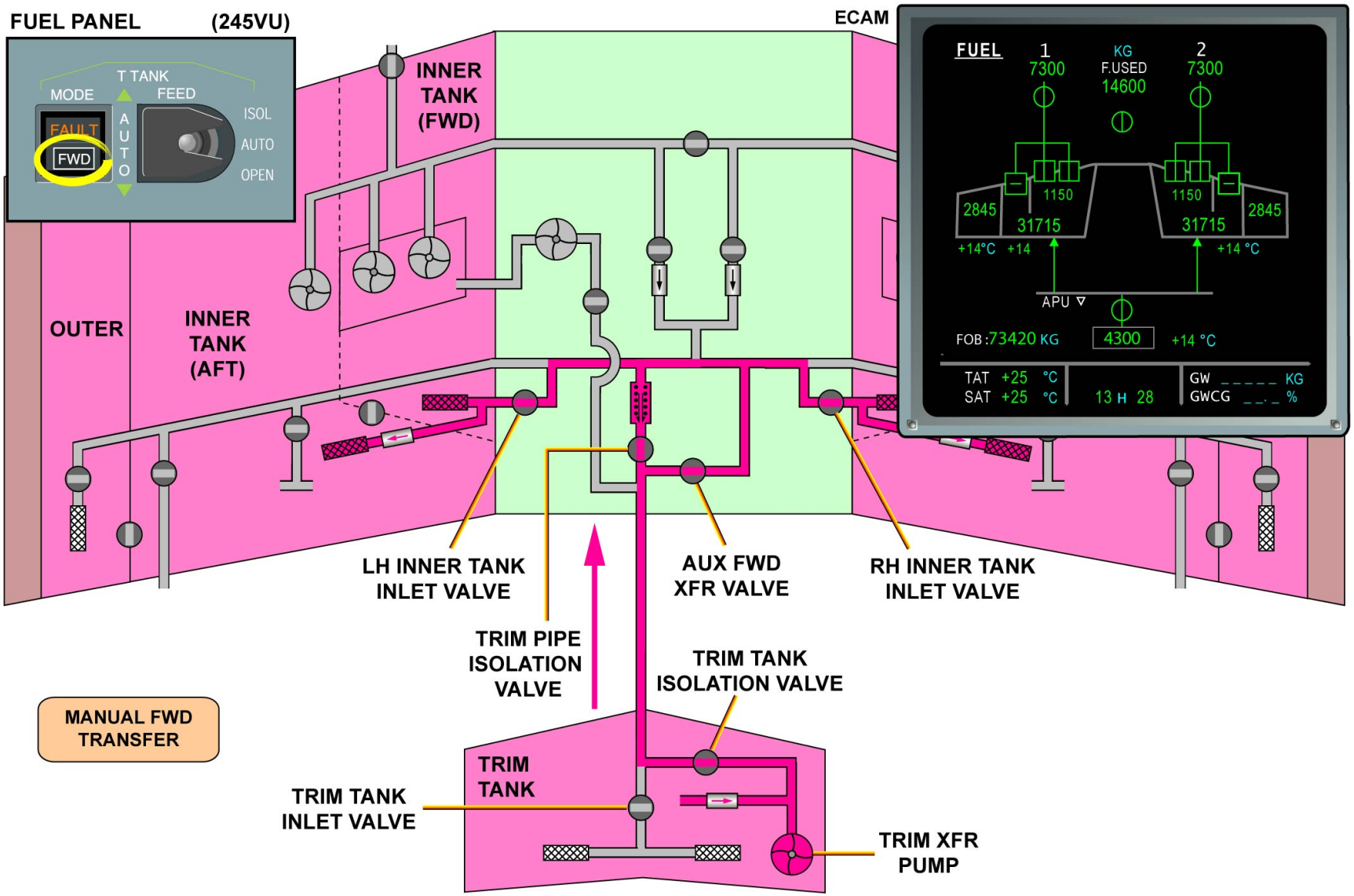

MANUAL OPERATION - MODE "FWD" P/B SELECTION

G7508471 - G3NT1T0 - FM28D700000009

TRIM TRANSFER D/O (A330-300)

MANUAL OPERATION (continued)

TRIM TANK FEED SWITCH SELECTIONS

The T TANK FEED switch has three positions AUTO, ISOL and OPEN.
AUTO is the usual position of the switch, which gives the FCMCs full control of the trim transfer system, provided that the "FWD" mode switch is in the OFF position (the T TK MODE P/BSW is in AUTO position).
In an abnormal situation, following an ECAM warning, trim transfer system isolation can be requested by selecting the T TK FEED switch to ISOL. In this position, the switch overrides the FCMC trim transfer control and the manual FWD transfer P/BSW.
By the wiring, the following valves are controlled to close:
- the trim tank inlet,
- the trim tank isolation,
- the auxiliary FWD transfer,
- the trim pipe isolation,

causing the trim pipe to be isolated at both ends.

NOTE: Note: If T TK FEED switch is set to ISOL (trim tank isolated), it is still possible to use the APU.

G7508471 - G3NT1T0 - FM28D7000000009

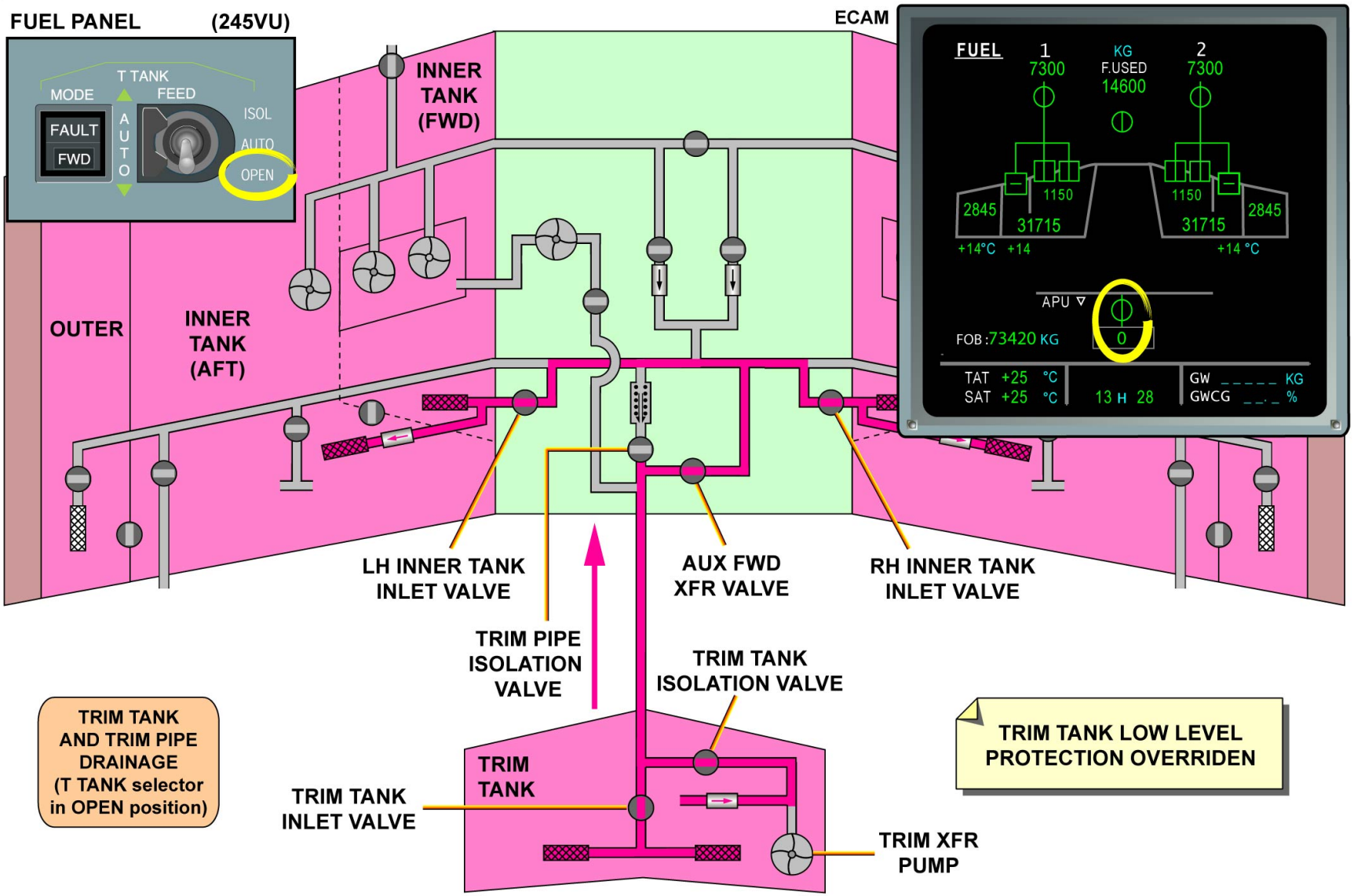

MANUAL OPERATION - TRIM TANK FEED SWITCH SELECTIONS

G7508471 - G3NT1T0 - FM28D700000009

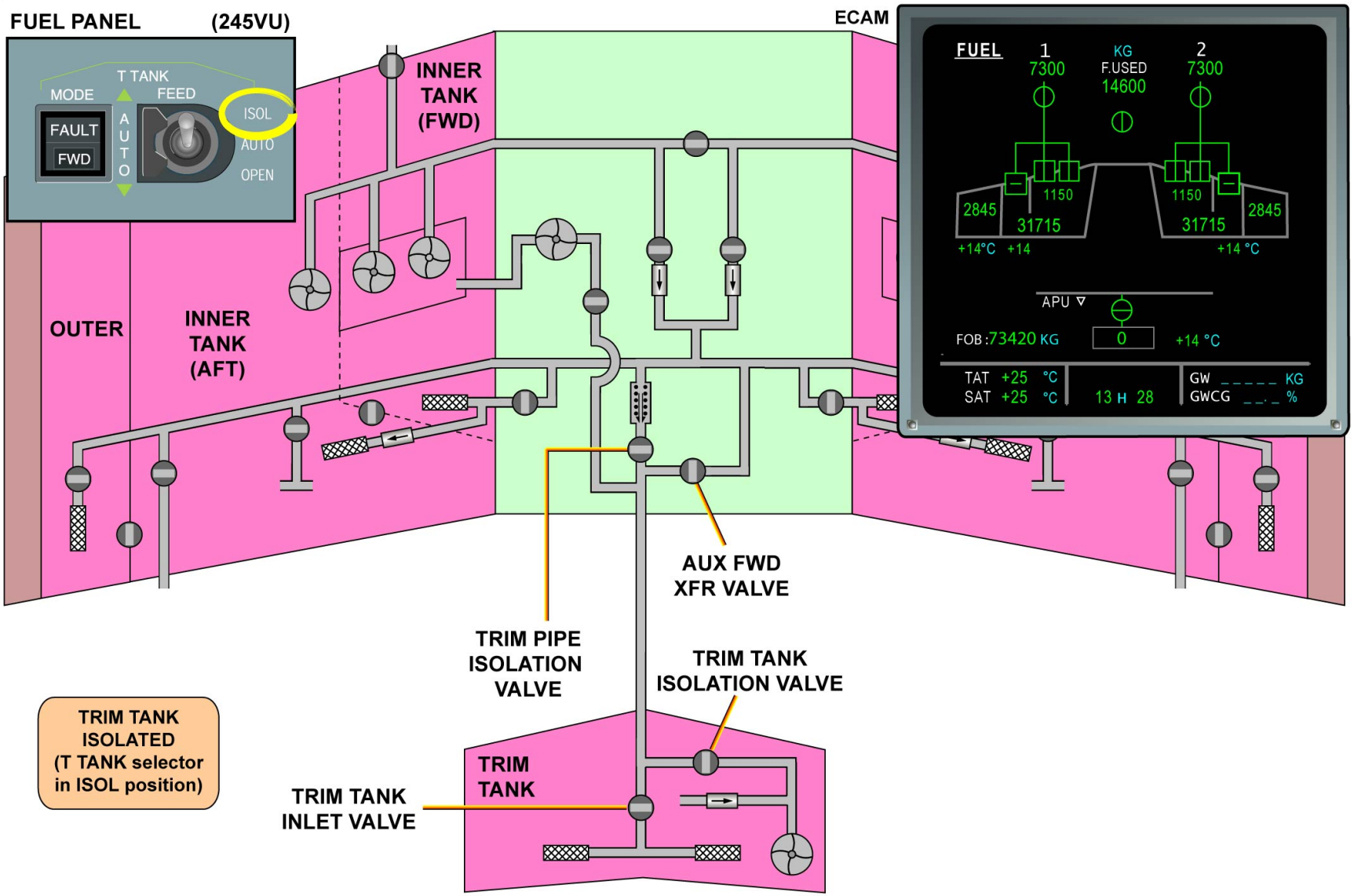

MANUAL OPERATION - TRIM TANK FEED SWITCH SELECTIONS

G7508471 - G3NT1T0 - FM28D700000009

This Page Intentionally Left Blank

G7508471 - G3NT1T0 - FM28D7000000009

AUTOMATIC REFUEL (2)

AUTOMATIC REFUEL OPERATION

Before starting the refuel/defuel procedure, some safety precautions have to be taken, such as safety barriers and "no smoking" warning notices. Especially, if a fuel tanker is used. Make sure that the fire-fighting equipment is available. The landing gear chocks should not touch their tires. But the parking brake must be on. The weight of the fuel can suddenly compress the landing gear and lower the aircraft : make sure there is no equipment below the aircraft which can cause damage. All electrical equipment you use must not cause sparks and a water contamination check on a fuel sample must be performed.
For refuelling at the terminal, a ground pumping unit is used. The ground pumping unit is positioned under the wing, below the refuel/defuel coupling access panel. The ground cable is connected to the aircraft on the landing gear. The platform is lifted up to the refuel/defuel station. One, two, three or four refuel hoses can be connected to perform an automatic pressure refuel. We are going to use two on the LH wing. The panel is opened. The two refuel/defuel coupling caps removed. The two fuel supply hoses are connected. The caution placard indicates : do not let the refuel pressure get to more than 50 psi or 3.5 bars. As we are at the terminal, the refuelling pump unit is connected to the ground installation. Under the fuselage fairing, open the door of the refuel/defuel control panel 990 VU. If external electrical power or APU electrical power is not available, it is also possible to use the aircraft batteries. First of all, a test is to be performed. Lift the guard, then push and hold the high level test switch.
Check that:
- the high level and overflow lights change state,
- cockpit and end lights come on, on the F.Q.I. indicator,
- the fuel quantity, preselected and actual displays show all eights.

When the test switch is released, after a few seconds, all lights and quantity displays return to their initial condition. With the load switch, increase the preselected quantity up to the necessary fuel load. Adjust it. 74 tonnes are selected. Make certain that all refuel/defuel valves switches are in the norm position and guarded. Set the mode selector switch to the refuel position. The pump on the ground pumping unit can be started. Monitor that the fuel quantity indication increases. All tanks that are to receive fuel are filled simultaneously. The actual indication increases together with the tank quantities.
Note as the refuelling is performed only from the left hand side couplings, the left hand fuel tanks will be filled before the right hand ones.
When a tank is full, its high level light comes on. Here, the left outer tank. Its inlet valve closes. The right outer tank is also full. As the preselected quantity is 74 tonnes, no fuel is sent to the center tank, but there is some fuel in the trim tank. The inner tanks continue to fill.
The Fuel Control and Monitoring Computer (F.C.M.C.) controls the distribution of the fuel in the different tanks. The left inner tank is full. (The left inner tank blue high level light is on. Now, both wing tanks are full.
The refuelling automatically stops as the end light comes on, steady ; "actual" and "preselected" displays agree and are stable with a 200 kg tolerance. Stop the pump on the ground pumping unit. On the refuel/defuel control panel, set the mode selector switch to off. All switches being in the normal and guarded position, the panel door is closed.
Disconnect the fuel supply hoses from the aircraft refuel/defuel couplings, and re-install the coupling caps. Close the access panel. Remove the platform. Disconnect the ground/bonding cables. If not needed, de-energize the aircraft electrical circuits. Put the chocks back in their original position. The automatic refuel operation is finished, verify that the area is clean and clear of any equipment. When servicing and passenger loading is completed, the A340 is ready for departure.

G7508471 - G3NT1T0 - FM28B200000001

AUTOMATIC REFUEL OPERATION

G7508471 - G3NT1T0 - FM28B2000000001

REFUEL/DEFUEL D/O (A330-200)

GENERAL

There are three different procedures to refuel the A/C - the pressure refuel in automatic or manual mode, and the overwing refuel. The A/C is fitted with two refuel couplings (optional on left wing) and there are refuel hose adaptors on each coupling. The A/C can be refueled through one or more of the refuel hose adaptors. When four refuel hoses are in use, the minimum time to pressure refuel the A/C, from empty tanks to maximum fuel capacity, is approximately 35 minutes. The refuel pressure at the refuel hoses must not exceed 50 psi. There are two procedures to defuel the A/C - the pressure defuel using the A/C fuel pumps and the suction defuel using an external suction device (11 psi max.). The A/C can be defueled through one or more of the refuel hose adaptors. But when only one adaptor on a refuel/defuel coupling is used, it must be the one identified by the "USE THIS ADAPTOR TO DEFUEL" marking. These two procedures can be used at the same time to increase the defuel rate.
Refuel/defuel operations are started from the refuel/defuel control panel or optionally from the cockpit REFUEL panel, for automatic refuel only.
The refuel/defuel control panel is located in the RH side of the belly fairing. A similar control panel can be installed as an option, next to the refuel/defuel couplings, at the bottom of the wing leading edge (on one wing or both wings).
Ground transfers from tank to tank - except to the trim tank - can be started from the refuel/defuel control panel.
The Fuel Control and Monitoring Computer (FCMC) gives overflow protection by closing the refuel/defuel isolation valves and stopping any type of refuel/defuel or ground transfer operation if any of the overflow sensors (fitted in surge tanks) become wet. The FCMC distributes the set quantity of fuel in the different tanks so that no hazardous overbalance condition occurs in all modes of fuel operation.

G7508471 - G3NT1T0 - FM28D800000003

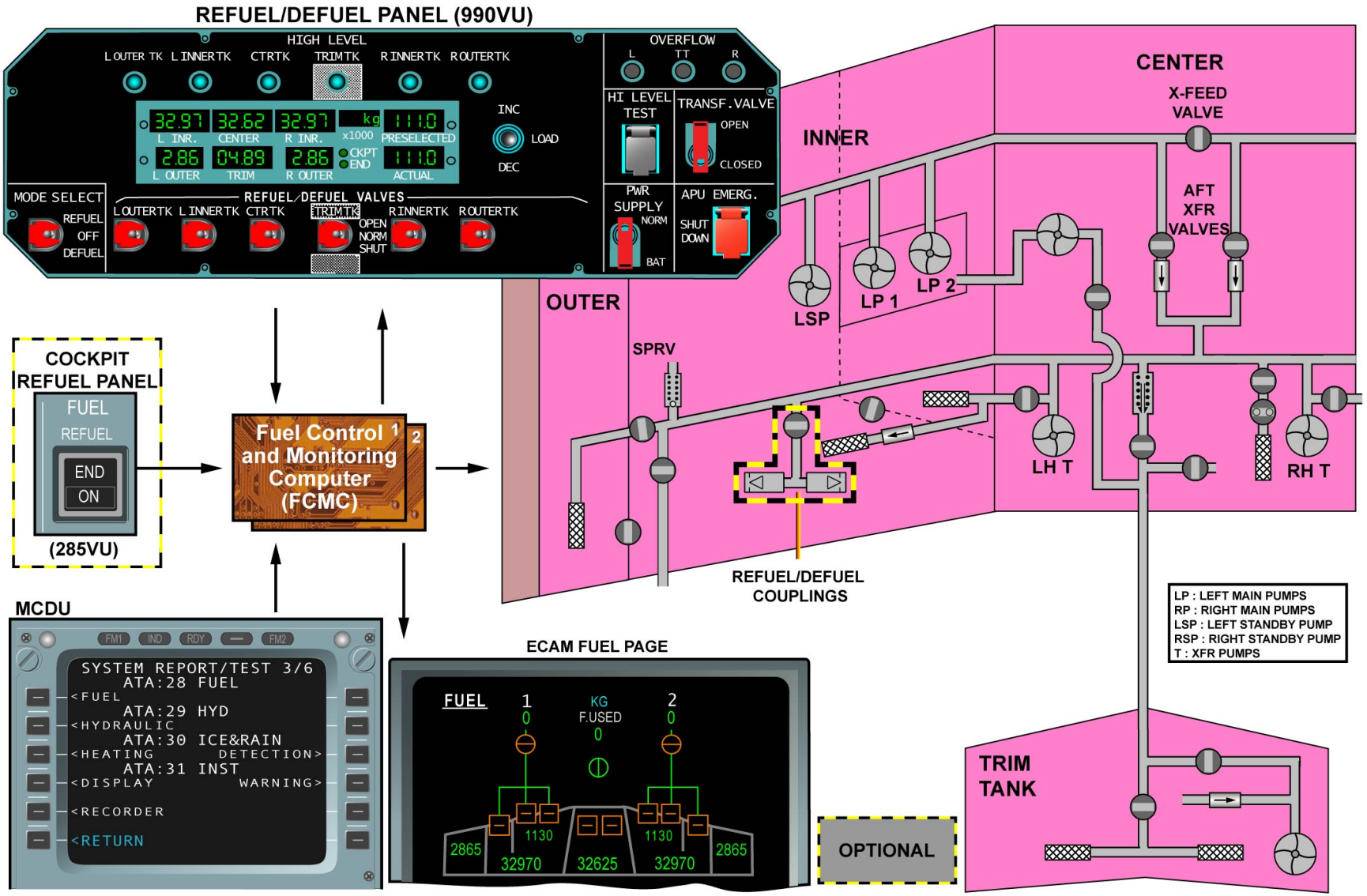

GENERAL

G7508471 - G3NT1T0 - FM28D800000003

REFUEL/DEFUEL D/O (A330-200)

DESCRIPTION

Here is a description of the refuel/defuel system in different conditions.

REFUEL/DEFUEL CONTROL PANEL

The primary components of the refuel/defuel control panel are:
- the PoWeR SUPPLY (NORM/BAT) switch, for refuel/defuel on batteries HOT BUS power supply if there is no normal supply,
- the HI LEVEL TEST switch,
- the APU EMERGency SHUTDOWN switch,
- the preselect (LOAD select) switch, used for automatic refuel only,
- the MODE SELECT switch, guarded in OFF position
- the REFUEL/DEFUEL VALVES switches, guarded in NORM position
- the refuel indicator panel.

G7508471 - G3NT1T0 - FM28D800000003

REFUEL/DEFUEL PANEL (990VU)

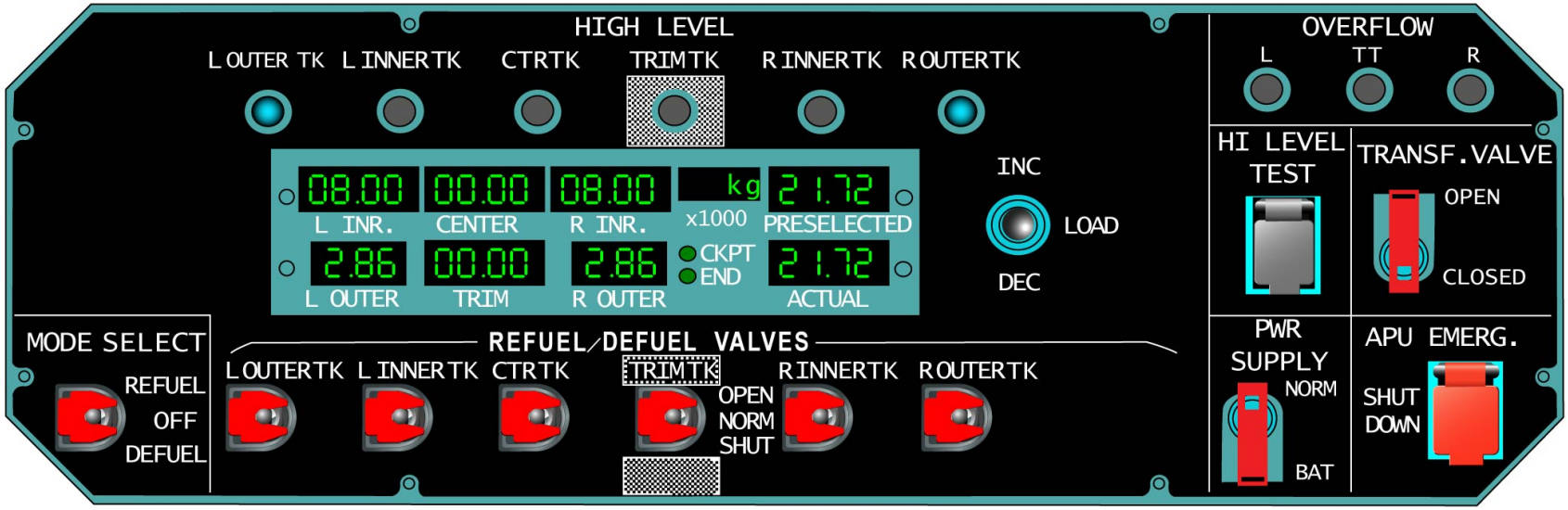

DESCRIPTION - REFUEL/DEFUEL CONTROL PANEL

G7508471 - G3NT1T0 - FM28D800000003

REFUEL/DEFUEL D/O (A330-200)

DESCRIPTION (continued)

REFUEL/DEFUEL COUPLINGs

One refuel/defuel coupling is installed on the RH wing. One additional coupling is installed as an option on the LH wing. Each coupling is attached to the front face of the wing front spar. Each refuel/defuel coupling has a Y-shaped hollow body, with a circular housing in the center to receive the refuel isolation valve. Each refuel/defuel coupling is equipped with two refuel adaptors. Each refuel adaptor is protected by a removable cap.

REFUEL ISOLATION VALVES

The refuel isolation valve is electrically controlled via a solenoid and hydraulically operated. When the valve is energized and a fuel pressure is supplied, the isolation valve opens. The isolation valve has a manual override button that can be used to open the valve if there is electrical or solenoid failure. The refuel isolation valve is installed in the center of each refuel/defuel coupling.

OUTER, INNER, CENTER TANKS TRIM INLET VALVES AND ACTUATORS

All inlet valves are of the ball valve type and are operated by a single DC motor actuator fitted with a visual open/close indicator. They are connected to the refuel/defuel gallery and allow fuel distribution to the various tanks through dedicated supply lines.
Two outer tank inlet valves, one for each outer tank, are installed in the inner tanks and attached to the front face of the wing rear spar. Their electrical actuators are fitted on the rear face of this spar.
The inner tank inlet valves are installed in the fuel supply line to both inner tanks. These valves are fitted in the center tank and attached to the forward face of the center fuselage rear spar. Their actuators are attached to the rear face of this spar.
A center tank inlet valve is installed in the center tank and is attached to the front face of the rear spar. Its actuator is fitted on the rear face of the rear spar.
A trim tank inlet valve is installed in the trim tank and its actuator is attached under the bottom skin.

CENTER TANK INLET RESTRICTOR VALVE

The center tank inlet restrictor valve is located immediately downstream of the center tank inlet valve. Its function is to prevent overpressure of the center tank structure. During defueling, the valve is in the restricted position. The valve is installed in the center tank and attached to the front face of the rear spar. It is operated with a single electrical motor actuator attached to the rear face of the rear spar and equipped with a visual position indicator.

EMERGENCY ISOLATION VALVES

The emergency isolation valves are of the ball valve type, each one operated by two DC motor actuators. One valve is installed in each inner tank and its actuator is attached to the wing rear spar. During normal operation, both emergency isolation valves are open to do fuel quantity balancing between the forward and aft sections of each inner tank.

CHECK VALVES

Two check valves prevent fuel flow from the refuel gallery to the engine feed gallery in case any aft transfer valve is stuck in the open position.

REFUEL DIFFUSERS

The fuel is delivered into the fuel tanks through diffusers.

G7508471 - G3NT1T0 - FM28D800000003

SURGE-PRESSURE RELIEF VALVE

During refueling, two surge-pressure relief valves prevent a pressure surge into the refuel gallery. If the fuel pressure is more than 65 psi the valve opens to decrease the pressure in the gallery.

DEPRESSURIZING VALVE

A depressurizing valve is fitted on the refuel gallery in the right inner tank only. After the refuel operation has been completed, the depressurizing valve releases the remaining pressure in the refuel gallery into the right inner tank. The valve operates between 2 and 3 psi.

RESTRICTOR VALVE

A one-way restrictor valve is installed on the refuel gallery upstream of the trim pipe isolation valve. It decreases the fuel flow directed to the trim tank and lets the fuel flow freely in the opposite direction.

REFUEL GALLERY LOW-PRESSURE SWITCH

A LP switch, attached to the center fuselage rear spar, detects any LP condition (below 6 psi) in the refuel gallery. If a LP condition is detected during refueling of the trim tank with the APU operating (fed by the AFT APU pump), the trim transfer line is isolated. Refueling of the trim tank is temporarily stopped and the APU is fed by the FWD APU pump, until the LP condition disappears.

G7508471 - G3NT1T0 - FM28D800000003

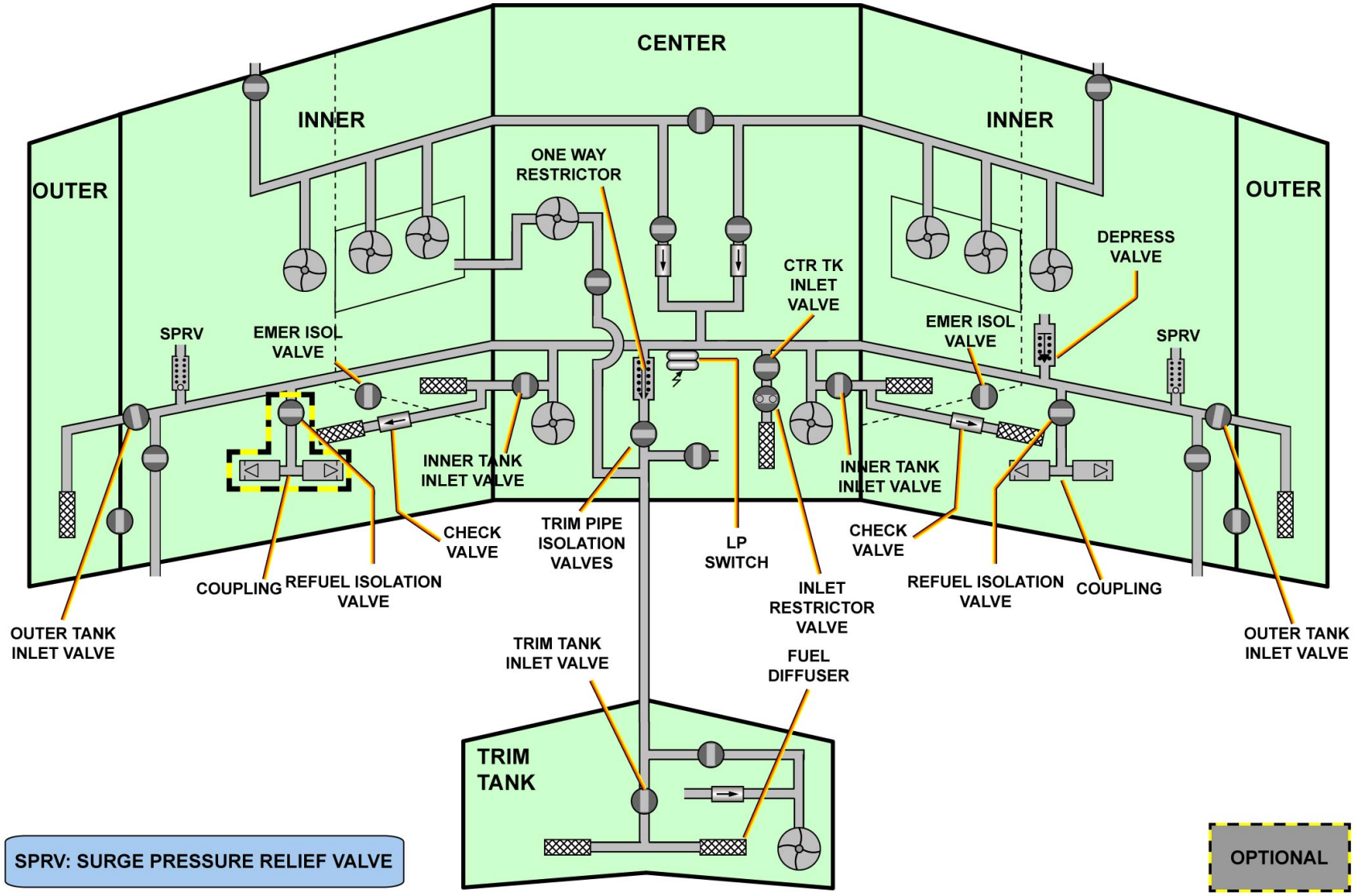

DESCRIPTION - REFUEL/DEFUEL COUPLINGS ... REFUEL GALLERY LOW-PRESSURE SWITCH

G7508471 - G3NT1T0 - FM28D800000003

This Page Intentionally Left Blank

G7508471 - G3NT1T0 - FM28D800000003

REFUEL/DEFUEL D/O (A330-200)

OPERATION

When the quick-release door of the refuel/defuel control panel is open, a door-operated microswitch sends a signal to the FCMCs to supply the refuel/defuel electrical circuits. Once the refuel/defuel panel is powered, any refuel, defuel or ground transfer can be started.
The Air Data Inertial Reference Systems (ADIRS) are set to NAV so that the FCMCs receive the A/C attitude information required for maximum accuracy as regards tank fuel quantity calculation.

NOTE: Note: If external electrical power or APU electrical power is not available, it is possible to use A/C batteries to do a refuel. But on batteries, the ADIRS do not send A/C attitude information to the FCMCs. Therefore, after a refuel on batteries, there could be a difference of up to 750 kg between the set fuel quantity and the actual fuel quantity.

HI-LEVEL TEST

When the guarded HI LEVEL TEST P/BSW is pushed in and held, it sends a signal to the FCMCs, which do a continuity test of the high-level and overflow sensors and their circuits. If these are serviceable, the FCMCs change the HIGH LEVEL blue lights and the OVERFLOW amber lights to their opposite condition. In addition, the CKPT and END lights come on and the fuel quantity, PRESELECTED for Preselected Fuel Quantity (PFQ) and ACTUAL for Fuel On Board (FOB) all display 8s. At the same time, the FCMC tests the operation of the inlet valves and checks the continuity of the refuel isolation valve circuit.
When the HI LEVEL TEST P/BSW is released out, the following has to be checked:
- the HIGH LEVEL and OVERFLOW lights go back to their initial condition,
- the fuel quantity, PRESELECTED (PFQ) and ACTUAL (FOB) displays go back to their initial values,
- the CKPT and END lights go off.

G7508471 - G3NT1T0 - FM28D800000003

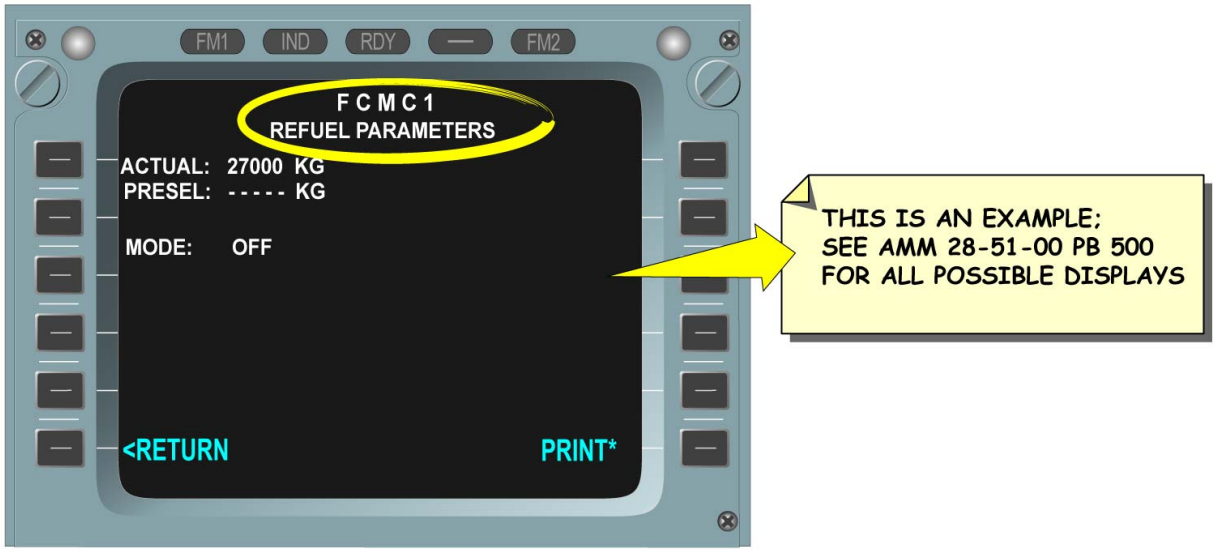

REFUEL/DEFUEL PANEL (990VU)

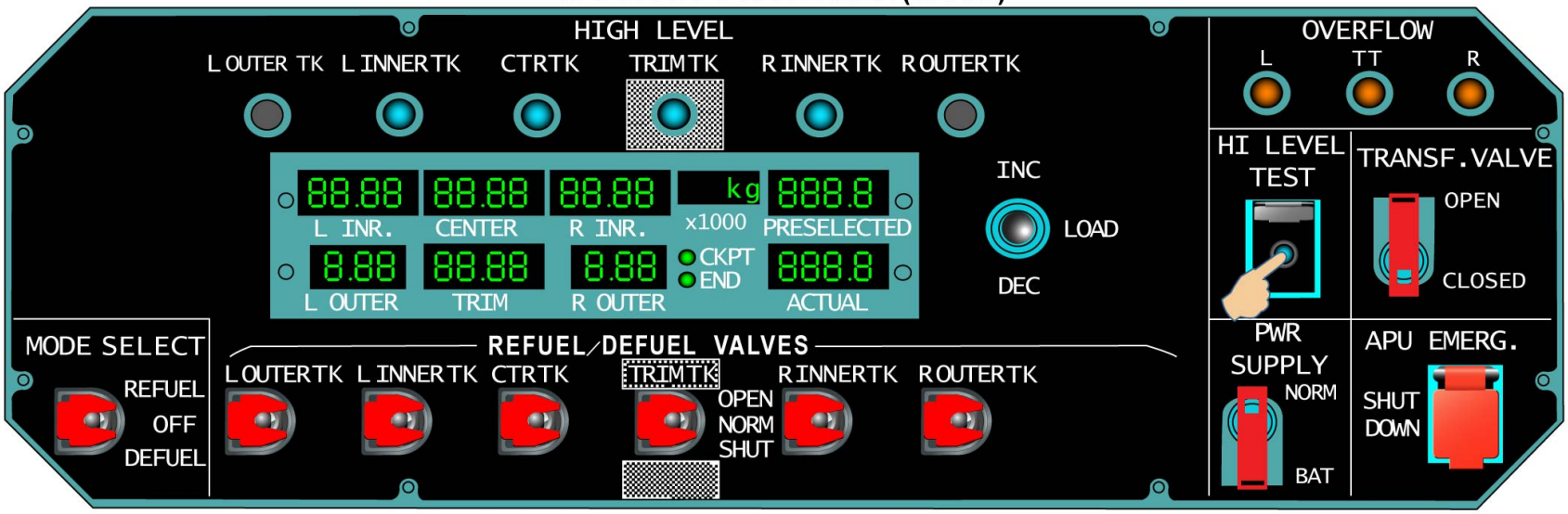

OPERATION - HI-LEVEL TEST

G7508471 - G3NT1T0 - FM28D800000003

REFUEL/DEFUEL PANEL (990VU)

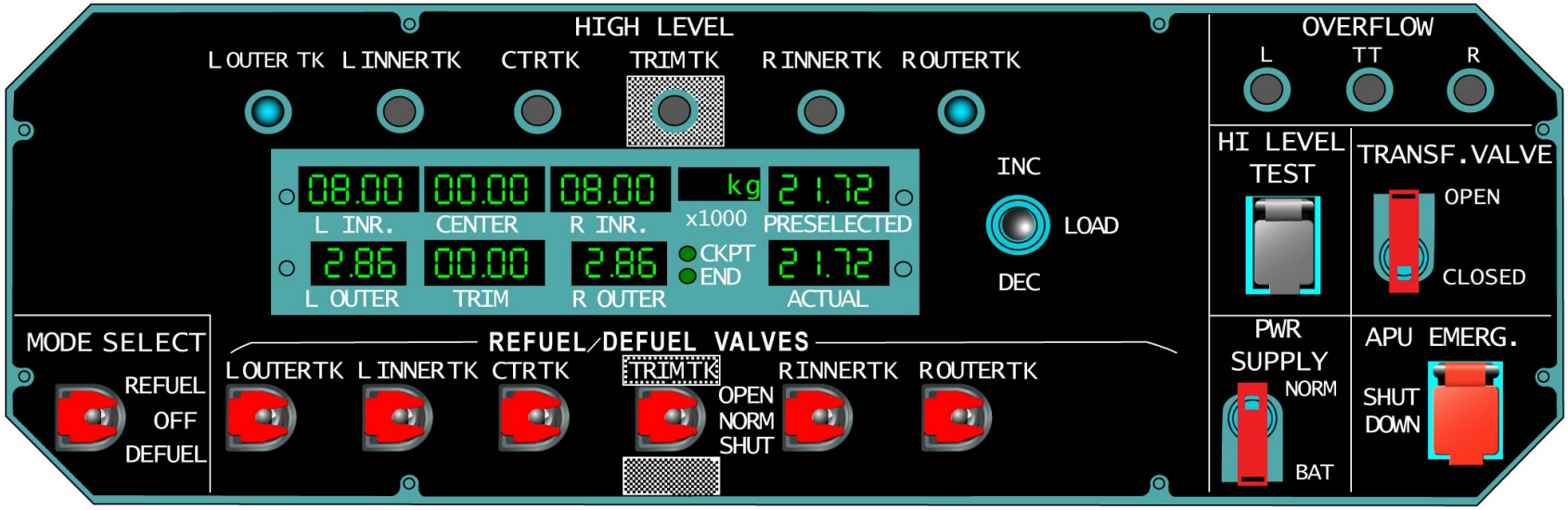

OPERATION - HI-LEVEL TEST

G7508471 - G3NT1T0 - FM28D800000003

This Page Intentionally Left Blank

G7508471 - G3NT1T0 - FM28D800000003

REFUEL/DEFUEL D/O (A330-200)

OPERATION (continued)

AUTOMATIC PRESSURE REFUEL

During an automatic refuel and after the high level test, the PRESELECTED switch is used to preselect the fuel quantity on the PRESELECTED display. To start a refuel, this quantity must be set to a value, which is more than 200 kg greater than the ACTUAL indication.
The FCMCs receive this preselection and refer to the memorized post-refuel distribution chart to select the tanks to be refueled and to calculate their respective fuel quantity targets.
When the MODE SELECT switch is set to REFUEL, the FCMC supplies 28 VDC to the refuel/defuel isolation valve solenoids. When a refuel pressure is supplied, the isolation valves open hydraulically and let the fuel go into the refuel/defuel gallery. The FCMC then controls all the tank inlet valve relays involved in the refueling from the distribution chart. The tanks involved are refueled simultaneously.
As the individual tank fuel quantity increases, the FCMC closes the related inlet valve when the fuel tank quantity target is reached or the high-level sensors become wet.
At the end of the refuel, the END light comes on steadily to indicate a complete successful refueling. The MODE SELECT switch is set to OFF and the refuel isolation valve closes.
An automatic refuel may not start or be aborted by the FCMC if any of the following conditions occur:
- "BLOCK" fuel value entered in MCDU "INIT" page,
- OUTR TK XFR or T TANK MODE P/BSW not in AUTO mode,
- any REFUEL/DEFUEL VALVES switch not in NORM position,
- any inlet valve position disagrees with FCMC command,
- any surge tank overflow fuel sensor becomes wet,
- the center tank high level sensor becomes wet,
- any jettison valve is detected open (if installed),
- any high level sensor failure,
- any tank fuel quantity indication function inoperative.

G7508471 - G3NT1T0 - FM28D800000003

REFUEL/DEFUEL PANEL (990VU)

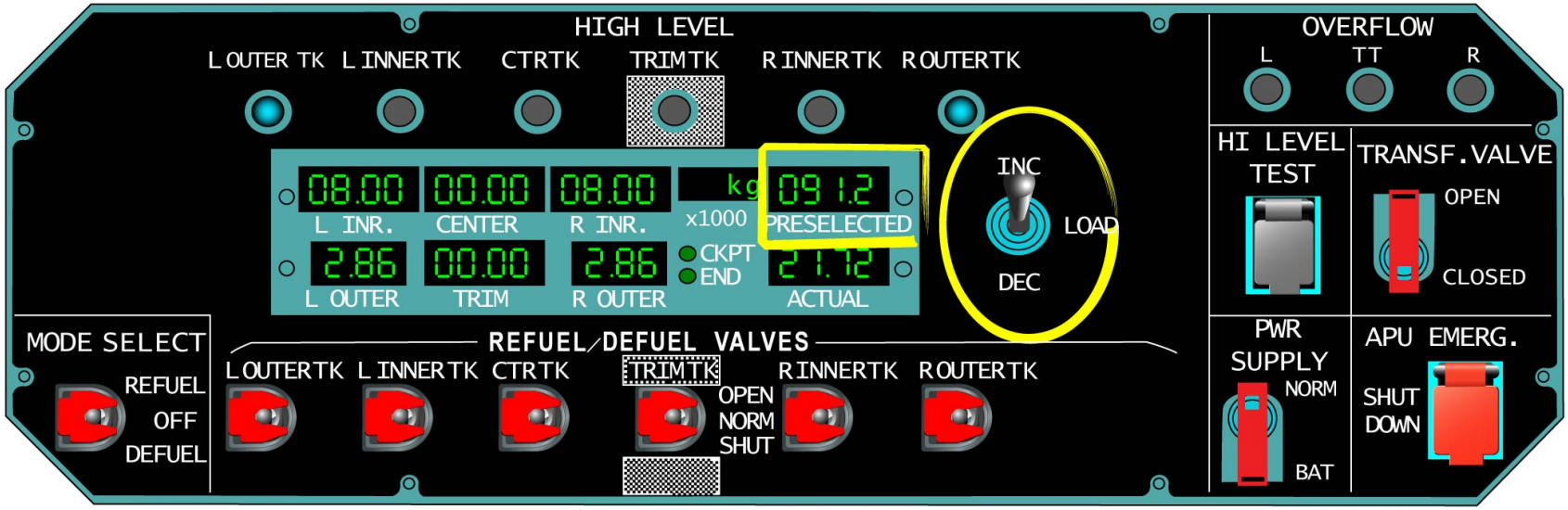

AUTO REFUEL

OPERATION - AUTOMATIC PRESSURE REFUEL

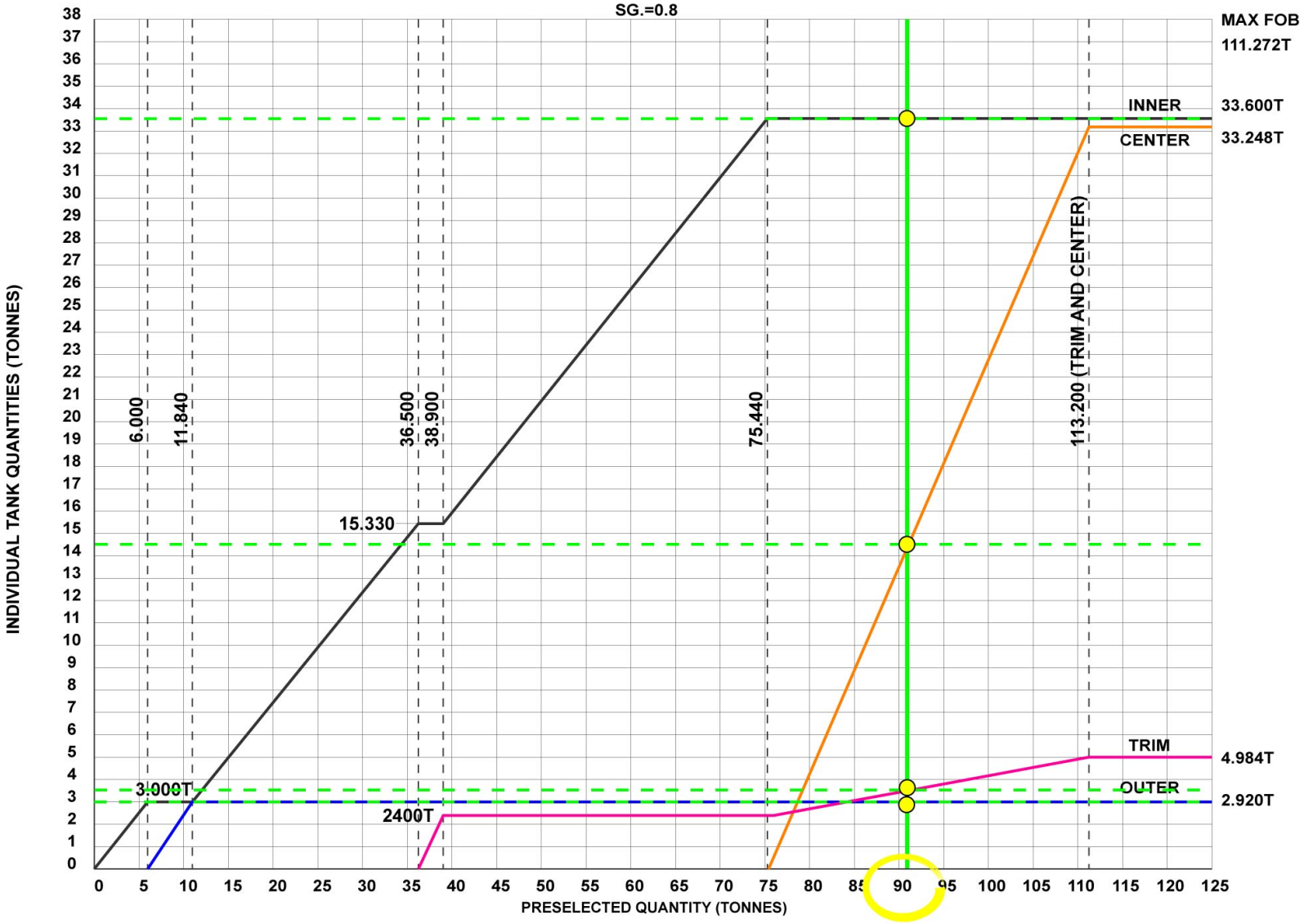

OPERATION - AUTOMATIC PRESSURE REFUEL

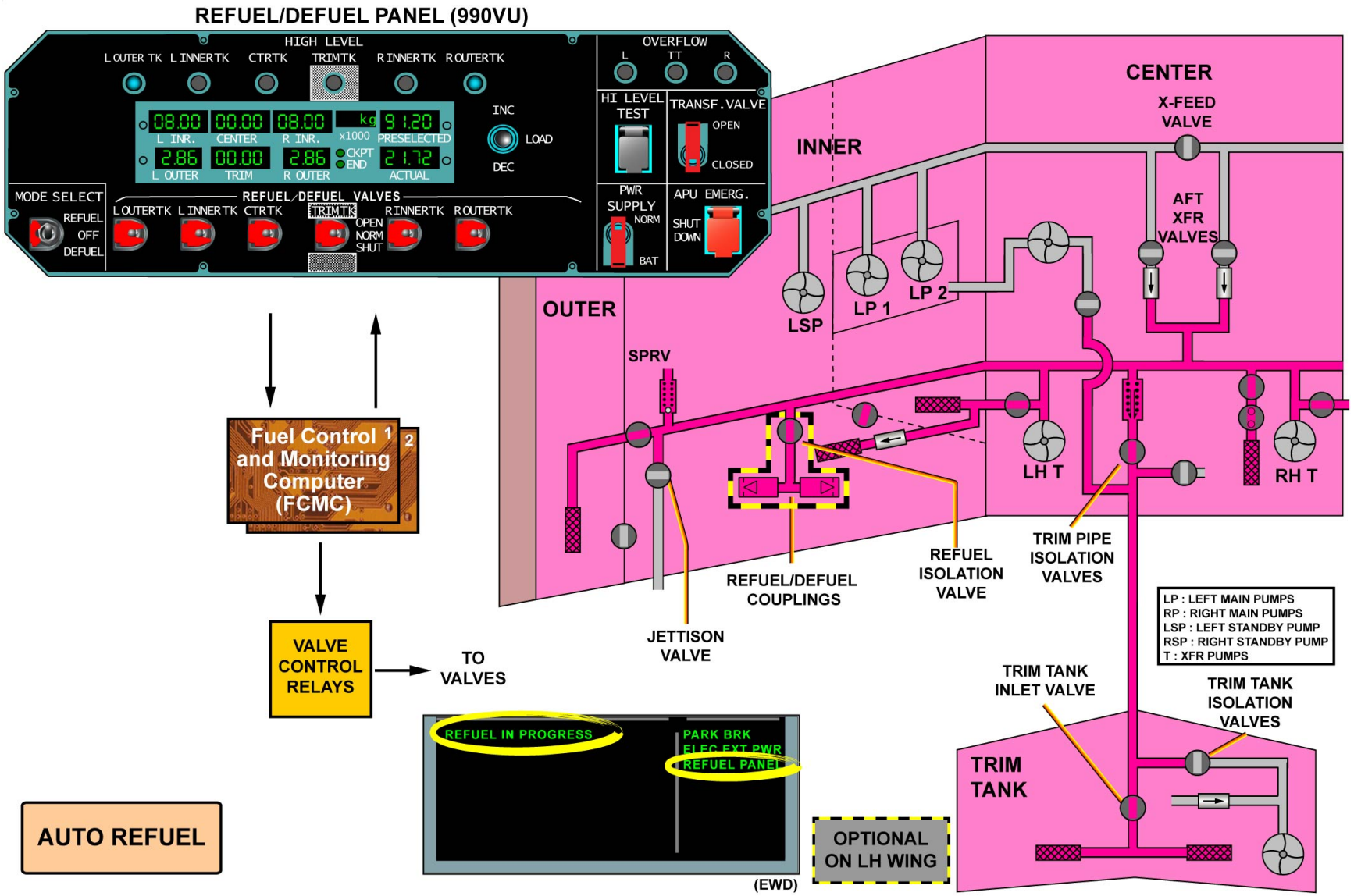

OPERATION - AUTOMATIC PRESSURE REFUEL

G7508471 - G3NT1T0 - FM28D800000003

REFUEL/DEFUEL PANEL (990VU)

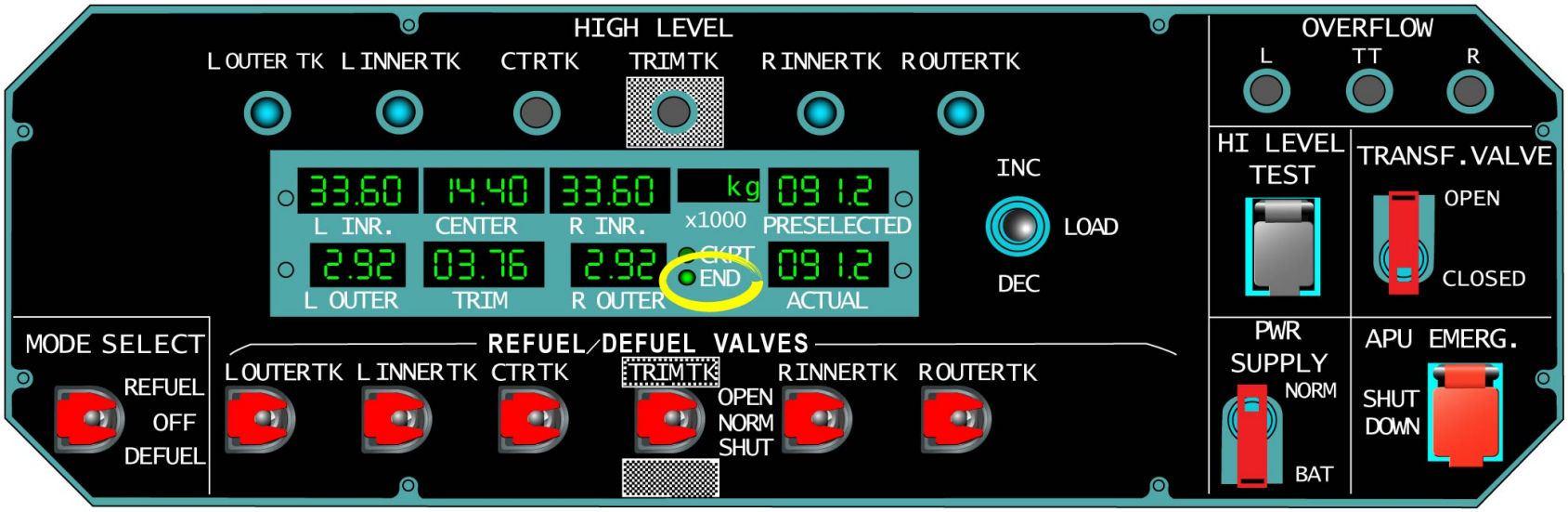

AUTO REFUEL

OPERATION - AUTOMATIC PRESSURE REFUEL

G7508471 - G3NT1T0 - FM28D800000003

This Page Intentionally Left Blank

G7508471 - G3NT1T0 - FM28D800000003

REFUEL/DEFUEL D/O (A330-200)

OPERATION (continued)

REFUEL ABORT

The refuel process is aborted in case of:
- MAN XFR selection, or
- Inlet valve failure or high level test failure, or
- Overflow detection with an amber light on the refuel/defuel panel.

In this case, the FCMCs abort the refuel, the MCDU displays the refuel aprameters and the END LIGHT on the refuel/defuel panel flashes.

G7508471 - G3NT1T0 - FM28D800000003

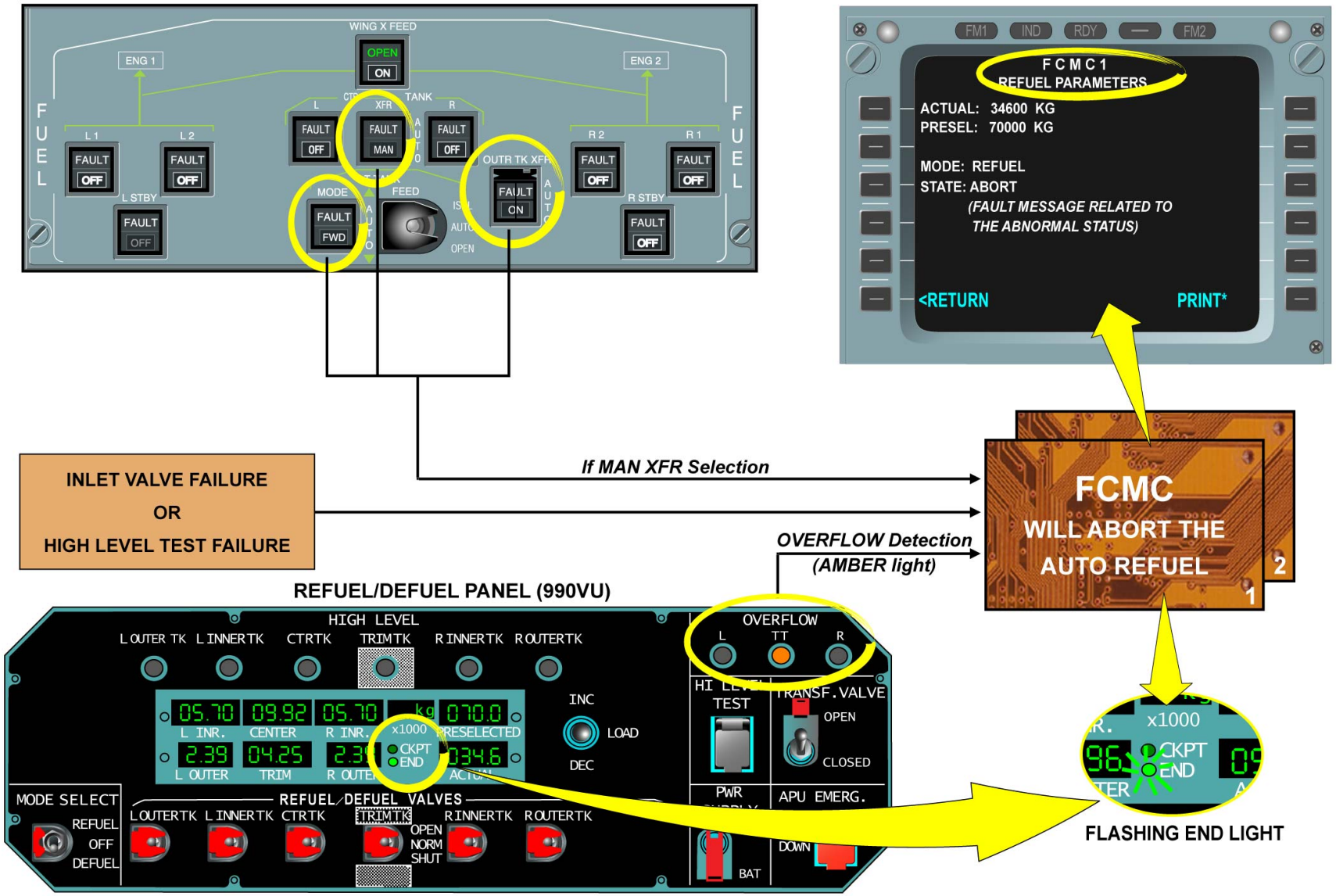

OPERATION - REFUEL ABORT

G7508471 - G3NT1T0 - FM28D800000003

REFUEL/DEFUEL D/O (A330-200)

OPERATION (continued)

MANUAL PRESSURE REFUEL

A manual refuel procedure is only required when an automatic refuel aborts due to a system failure. On the refuel/defuel panel, the PRESELECTED quantity must be set to zero or 500 kg below the ACTUAL quantity. The REFUEL/DEFUEL VALVE switches of the tanks to be refueled are set to OPEN and the REFUEL/DEFUEL VALVE switches of the tanks not to be refueled are set to SHUT. The MODE SELECT switch is then set to the REFUEL position to send a signal to the FCMC, which connects a 28 VDC supply to the solenoid of the refuel isolation valves. If refuel pressure is available, the refuel isolation valves open. The tanks involved are refueled simultaneously.

NOTE: Note: The refueling distribution chart, shown in the automatic refuel subtopic, can be referred to (through the AMM) to ensure optimization of fuel distribution during manual refueling.

Each inlet valve can be closed manually, by moving the related REFUEL/DEFUEL VALVE switch to SHUT or NORM, but the FCMC automatically closes the inlet valve when the related hi-level sensors become wet. All the selected fuel tanks are normally refueled at the same time, except when the FCMC applies the overbalance protection.

To keep a safe longitudinal balance, the trim tank inlet valve does not open unless one of these conditions occurs:

- the fuel quantities of the two inner tanks are above 14,000 kg,
- one inner tank fuel quantity is above 14,000 kg and the other inner tank inlet valve is open,
- the center tank inlet valve is open,
- the two inner tank inlet valves are open.

At the end of the refuel, the MODE SELECT switch is set to OFF and the refuel isolation valves close.

A manual refuel may not start or be aborted by the FCMC if any of the following conditions occurs:

- OUTR TK XFR or T TANK MODE P/BSW not in AUTO mode,
- any surge tank overflow fuel sensor becomes wet,
- the center tank high level sensor becomes wet,
- any jettison valve is detected open,
- any high level sensor failure.

G7508471 - G3NT1T0 - FM28D800000003

REFUEL/DEFUEL PANEL (990VU)

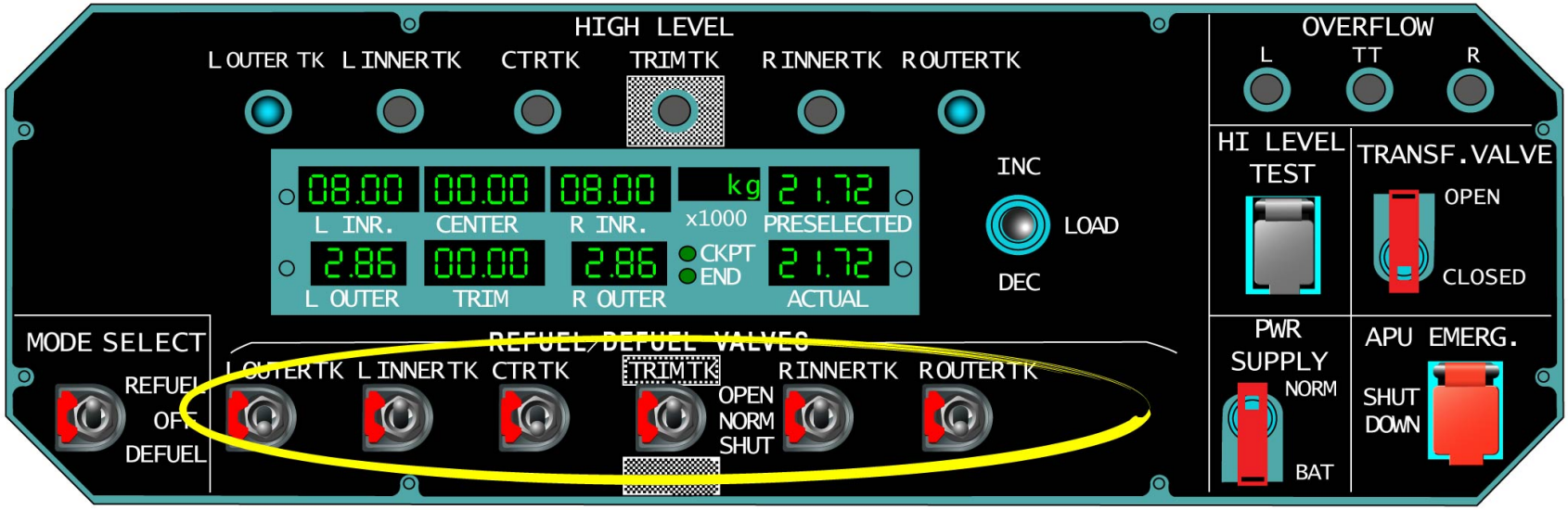

MANUAL REFUEL

OPERATION - MANUAL PRESSURE REFUEL

G7508471 - G3NT1T0 - FM28D800000003

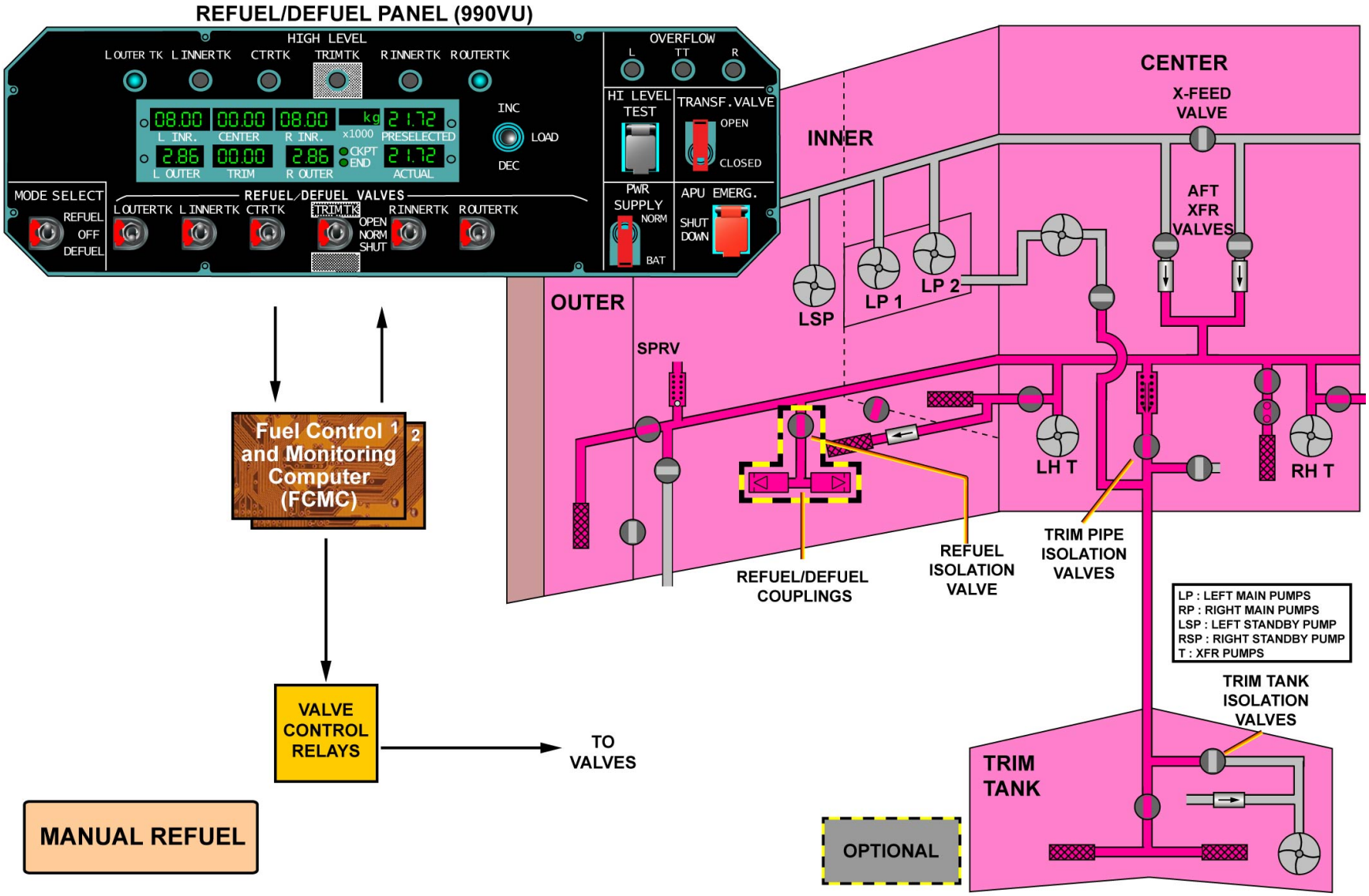

OPERATION - MANUAL PRESSURE REFUEL

G7508471 - G3NT1T0 - FM28D800000003

This Page Intentionally Left Blank

G7508471 - G3NT1T0 - FM28D800000003

REFUEL/DEFUEL D/O (A330-200)

OPERATION (continued)

COCKPIT AUTOMATIC REFUEL

Optionally, it is possible to do an automatic refuel from the cockpit. The required total fuel quantity must be entered via the MCDU as a BLOCK fuel on the INIT page 2. The quantity must be at least 200 kg more than the FOB quantity shown on the ECAM FUEL page.
On the cockpit REFUEL panel, when the REFUEL P/BSW is pressed in, the white ON light comes on and the master FCMC does an automatic high level test. If the test is OK, the FCMC starts the automatic refuel. If the high level test fails, the green END light flashes in the REFUEL P/BSW.
When the refuel is complete and correct, the green END light comes on steadily in the REFUEL P/BSW.

G7508471 - G3NT1T0 - FM28D800000003

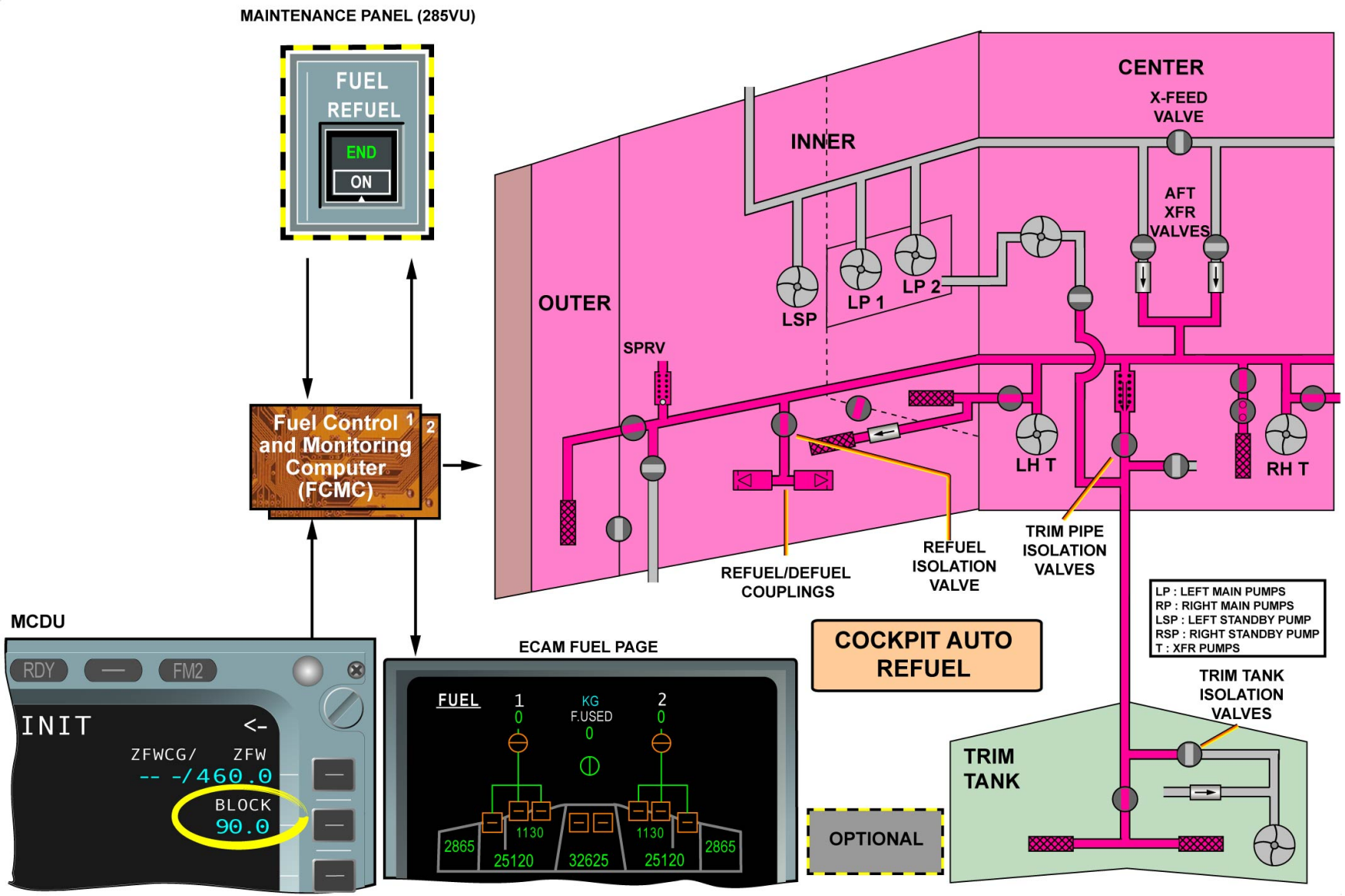

OPERATION - COCKPIT AUTOMATIC REFUEL

G7508471 - G3NT1T0 - FM28D800000003

REFUEL/DEFUEL D/O (A330-200)

OPERATION (continued)

PRESSURE DEFUEL OPERATION

This procedure describes the defueling by pressure of the wing tanks only. However it is possible to pressure defuel all fuel tanks.
If a surge tank overflow sensor is "wet", it is not possible to start a pressure defuel. In that case, a suction defuel is required.

NOTE: Note: One or two defuel hoses can be used to do a pressure defuel. But if only one coupling is used, it must be the one identified by the "USE THIS ADAPTOR TO DEFUEL" marking.

To do a pressure defuel, on the refuel/defuel control panel the MODE SELECT switch is set to DEFUEL and the TRANSF.VALVE switch is set to OPEN.

NOTE: Note: When the MODE SELECT switch is set to DEFUEL, the high level protection of the FCMC is inhibited.

On the cockpit overhead FUEL panel:
- the X FEED valve P/BSW is set to ON,
- the STBY or MAIN engine fuel pumps are set to on,
- once the engine fuel pumps operate, the FCMC opens the aft transfer valves,
- the FCMC prevents any overbalance condition during defueling.

NOTE: Note: The FCMC prevents movement of fuel from the wing tanks (the aft transfer valves stay closed) until the trim tank is empty in order to prevent any overbalance condition.

Pushed by the pumps, the fuel flows to the couplings through the refuel/defuel gallery. When the fuel quantity in one inner tank decreases to 3500 kg, the inter-tank transfer valves open automatically. The fuel in the outer tanks is transferred by gravity to the inner tanks, and then pushed in the refuel/defuel gallery by the engine fuel pumps. The defueling process can be monitored on the ECAM FUEL page.

NOTE: Note: If the outer tanks are not to be defueled, both inter-tank transfer valve C/Bs (6QL1 & 6QL2) must be pulled.

At the end of the pressure defuel, the STBY and/or MAIN engine fuel pumps are set to OFF and the X FEED valve is closed. The FCMC closes both aft transfer valves. On the refuel/defuel panel, the TRANSF. VALVE switch is set to CLOSED and the MODE SELECT switch is set to OFF.

G7508471 - G3NT1T0 - FM28D800000003

REFUEL/DEFUEL PANEL (990VU)

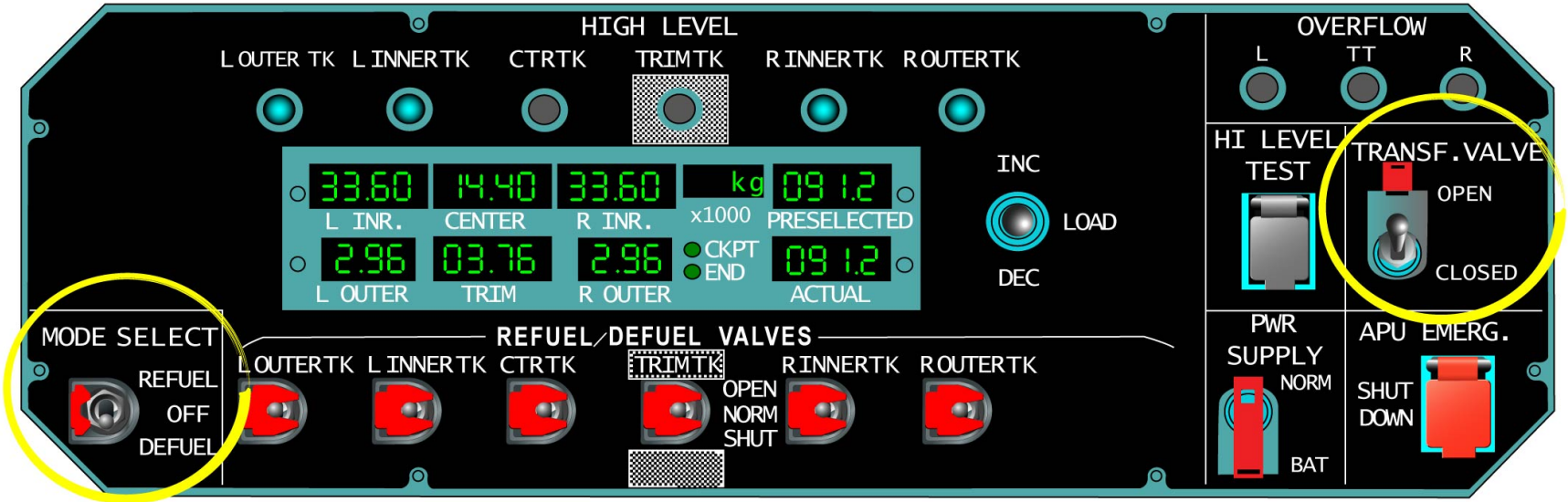

PRESSURE DEFUEL

OPERATION - PRESSURE DEFUEL OPERATION

G7508471 - G3NT1T0 - FM28D800000003

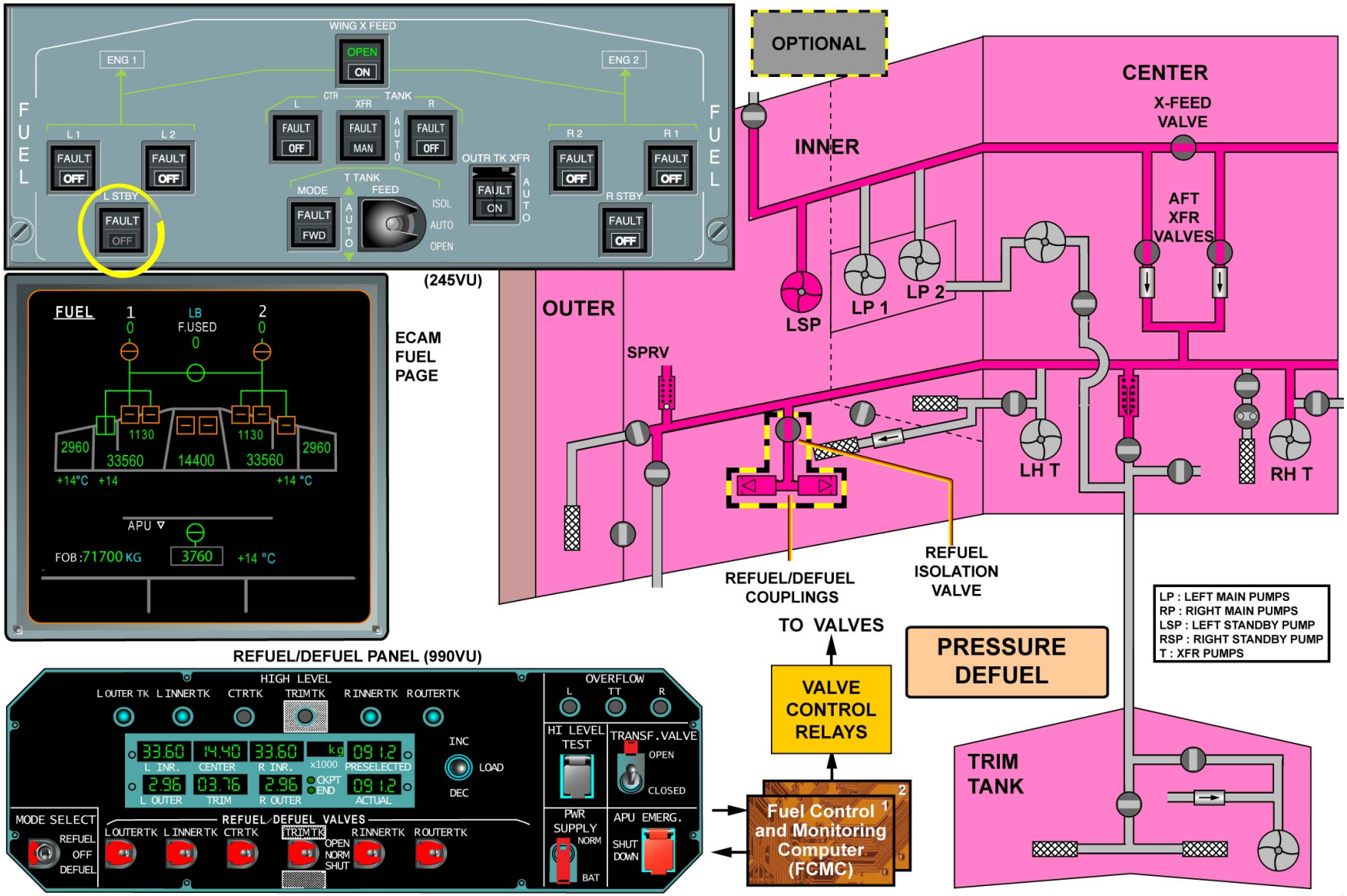

OPERATION - PRESSURE DEFUEL OPERATION

G7508471 - G3NT1T0 - FM28D800000003

This Page Intentionally Left Blank

G7508471 - G3NT1T0 - FM28D800000003

REFUEL/DEFUEL D/O (A330-200)

OPERATION (continued)

SUCTION DEFUEL OPERATION

This procedure describes defueling by suction of the wing tanks only. However, it is possible to suction defuel all fuel tanks.

NOTE: Note: The wing tanks cannot be defueled until the trim tank is empty.

On the refuel/defuel panel the MODE SELECT switch is set to DEFUEL, and the required fuel tank inlet valves are set to OPEN.

NOTE: Note: One or two defuel hoses can be used to do a pressure defuel. But if only one coupling is used, it must be the one identified by the "USE THIS ADAPTOR TO DEFUEL" marking.

The FCMC controls the refuel/defuel isolation valve solenoids. As soon as the suction motor of the fuel tanker is operating, the refuel/defuel isolation valve open by fuel suction. Each inlet valve selected OPEN on the refuel/defuel panel is controlled to open by the FCMC.

The suction defuel operation is monitored on the refuel/defuel panel. When completed, the REFUEL/DEFUEL VALVE switches are set back to NORM, and the MODE SELECT switch is set back to OFF.

G7508471 - G3NT1T0 - FM28D800000003

REFUEL/DEFUEL PANEL (990VU)

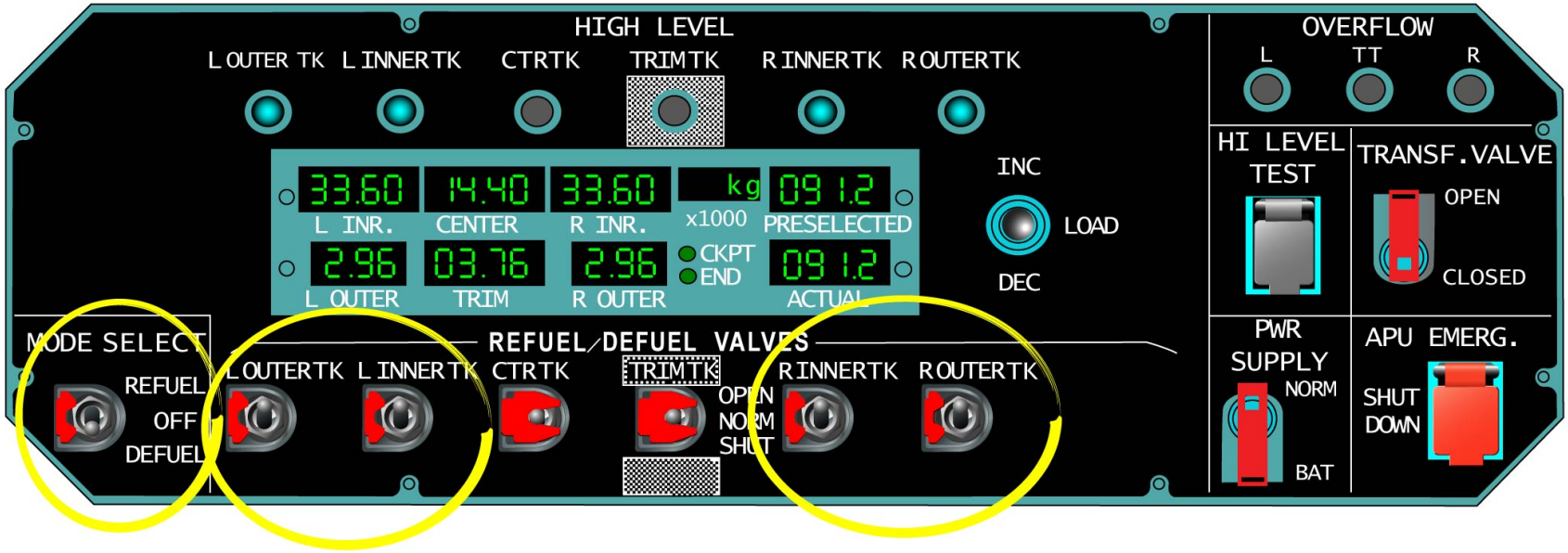

SUCTION DEFUEL

OPERATION - SUCTION DEFUEL OPERATION

G7508471 - G3NT1T0 - FM28D800000003

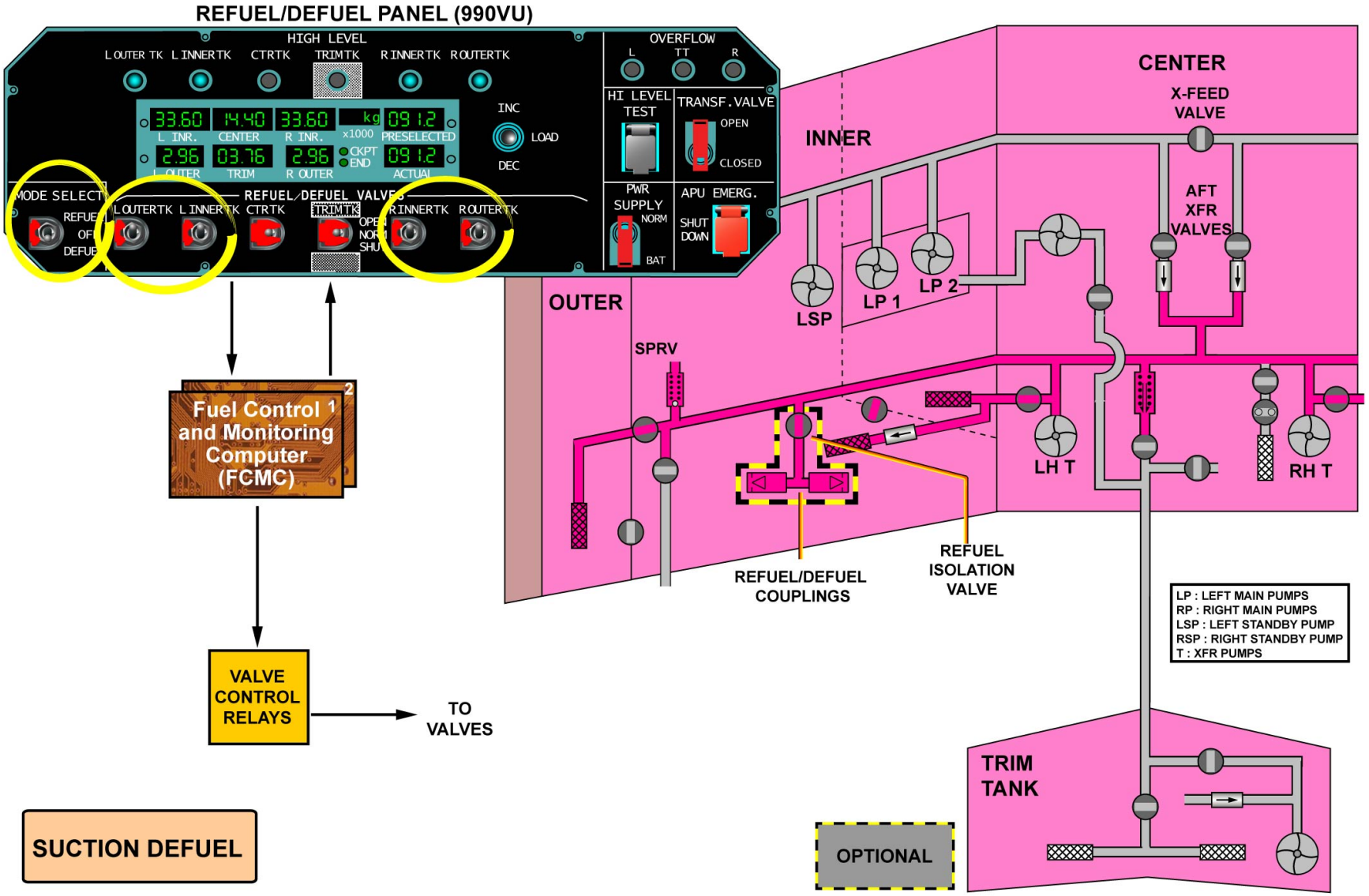

OPERATION - SUCTION DEFUEL OPERATION

G7508471 - G3NT1T0 - FM28D800000003

This Page Intentionally Left Blank

G7508471 - G3NT1T0 - FM28D800000003

REFUEL/DEFUEL D/O (A330-200)

OPERATION (continued)

INNER TANKS GROUND TRANSFERS

Ground transfer from tank to tank can be started from the refuel/defuel panel, except for a transfer to the trim tank. In this mode, the FCMC does not energize the refuel/defuel isolation valves and keeps the trim tank inlet valve closed. The FCMC hi-level protection is active. To start a ground transfer, actions from the cockpit and refuel/defuel panels are necessary. The following procedure describes a ground transfer between both wing inner tanks.

On the refuel/defuel panel:

- the REFUEL/DEFUEL VALVES switch for the tank to receive fuel is selected OPEN,
- the TRANSF. VALVE switch is set to OPEN,
- the MODE SELECT switch is set to REFUEL.

On the cockpit overhead FUEL panel:

- the X FEED valve P/BSW is set to ON,
- the STBY engine pump of the "supplier" inner tank is set to ON,
- once the engine pump runs, the FCMC opens the aft transfer valves,
- the fuel is thus pushed from the "supplier" inner tank through the crossfeed valve, both aft transfer valves and finally through the inlet valve of the "receiver" inner tank.

The inner tanks ground transfer is monitored from the ECAM FUEL page. When the inner tanks fuel quantity is at the required value, the engine STBY pump of the "supplier" tank is selected OFF and the X FEED valve P/BSW is selected OFF. On the refuel/defuel panel, the MODE SELECT switch is set to OFF, the REFUEL/DEFUEL VALVES switch of the "receiver" tank is set to NORM and the TRANSF. VALVE switch is set to CLOSED.

G7508471 - G3NT1T0 - FM28D800000003

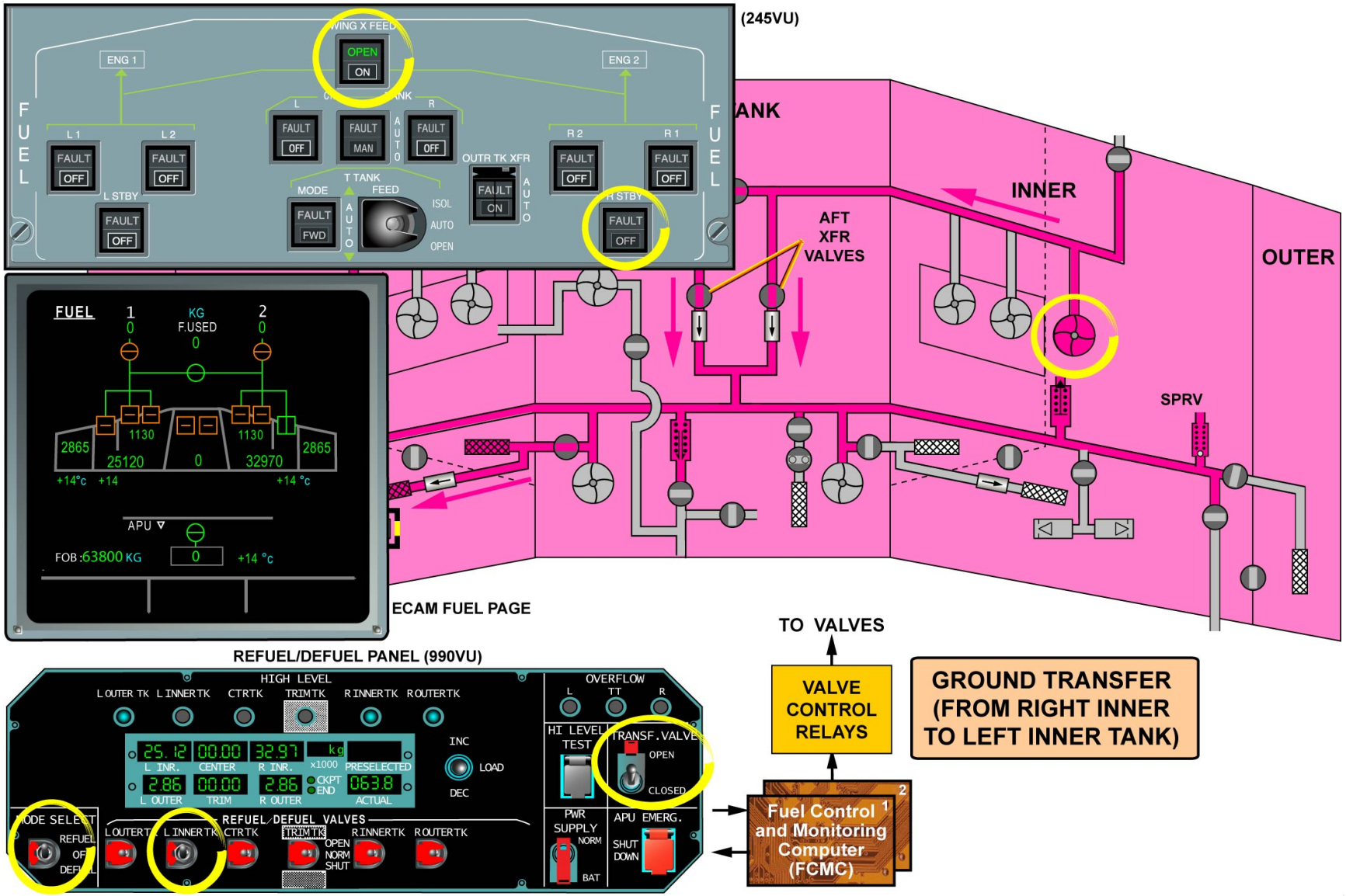

OPERATION - INNER TANKS GROUND TRANSFERS

G7508471 - G3NT1T0 - FM28D800000003

REFUEL/DEFUEL D/O (A330-200)

OPERATION (continued)

CENTER TANKS GROUND TRANSFERS

A ground transfer from the center tank to inner tanks can also be done from the refuel/defuel panel. In this case, all the main and standby pumps must be selected OFF. On the refuel/defuel panel:
- the inner tanks REFUEL/DEFUEL VALVE switches are set to OPEN,
- the MODE SELECT switch is set to REFUEL,
The FCMC opens the inner tank inlet valves.
On the cockpit overhead FUEL panel, the LH and RH CTR TANK P/BSWs are pressed in. The FCMC controls both center tank transfer pumps to operate. The fuel is thus pushed from the center tank to the inner tanks. The ground transfer is monitored from the ECAM FUEL page. When the fuel quantities in the inner and center tanks are at the required value, both center transfer pumps are selected OFF. On the refuel /defuel panel, the MODE SELECT switch is set to OFF and the inner tank REFUEL/DEFUEL VALVE switches are set to NORM.

G7508471 - G3NT1T0 - FM28D800000003

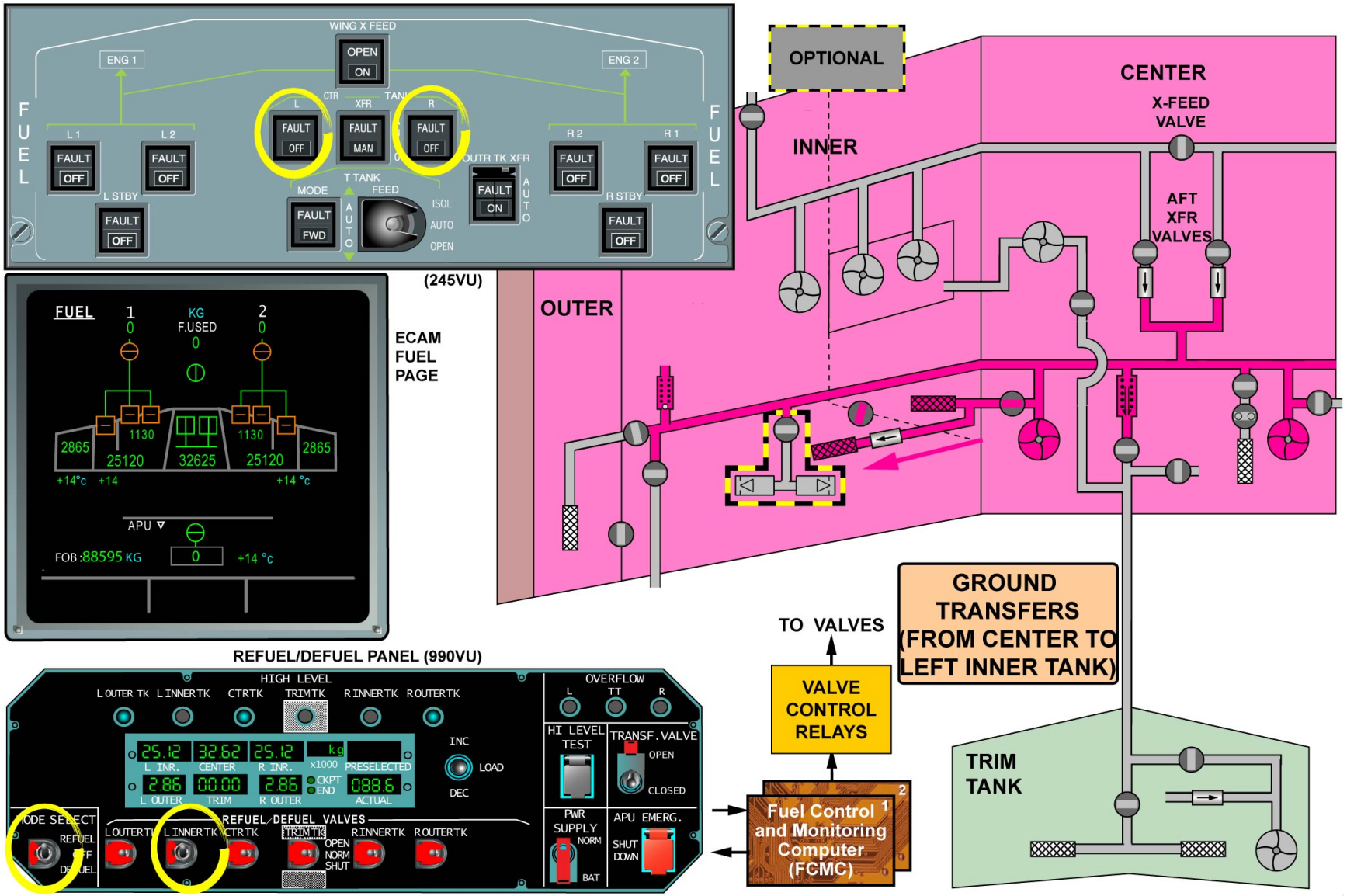

OPERATION - CENTER TANKS GROUND TRANSFERS

G7508471 - G3NT1T0 - FM28D800000003

REFUEL/DEFUEL D/O (A330-300)

GENERAL

There are three different procedures to refuel the A/C, the pressure refuel in automatic or in manual mode, and the overwing refuel. The A/C has two refuel couplings (optional on the left wing), with two refuel hose adaptors on each coupling. The A/C can be refueled through one or more of the refuel hose adaptors. When four refuel hoses are in use, the minimum time to pressure refuel the A/C, from empty tanks to maximum fuel capacity, is approximately 35 minutes. The refuel pressure at the refuel hoses must not exceed 50 psi. There are two procedures to defuel the A/C, the pressure defuel using the A/C fuel pumps and the suction defuel using an external suction device (11 psi max.). The A/C can be defueled through one or more of the refuel hose adaptors. But when only one adaptor on a refuel/defuel coupling is used, it must be the one identified by the "USE THIS ADAPTOR TO DEFUEL" marking. These two procedures can be used at the same time to increase the defuel rate.
Refuel/defuel operations are initiated from the refuel/defuel control panel or optionally from the cockpit REFUEL panel, for automatic refuel only.
The refuel/defuel control panel is located in the RH side of the belly fairing. A similar control panel may be installed as an option, next to the refuel/defuel couplings, at the bottom of the wing leading edge (either or both wings).
Ground transfers from tank to tank except to trim tank, can be initiated from the refuel/defuel control panel.
The Fuel Control and Monitoring Computer (FCMC) gives an overflow protection by closing the refuel/defuel isolation valves and stopping any type of refuel/defuel or ground transfer operation in case any of the overflow sensors (installed in surge tanks) becomes wet. The FCMC supplies the set quantity of fuel in the different tanks so that no hazardous overbalance condition occurs in all modes of fuel operation.

G7508471 - G3NT1T0 - FM28D800000009

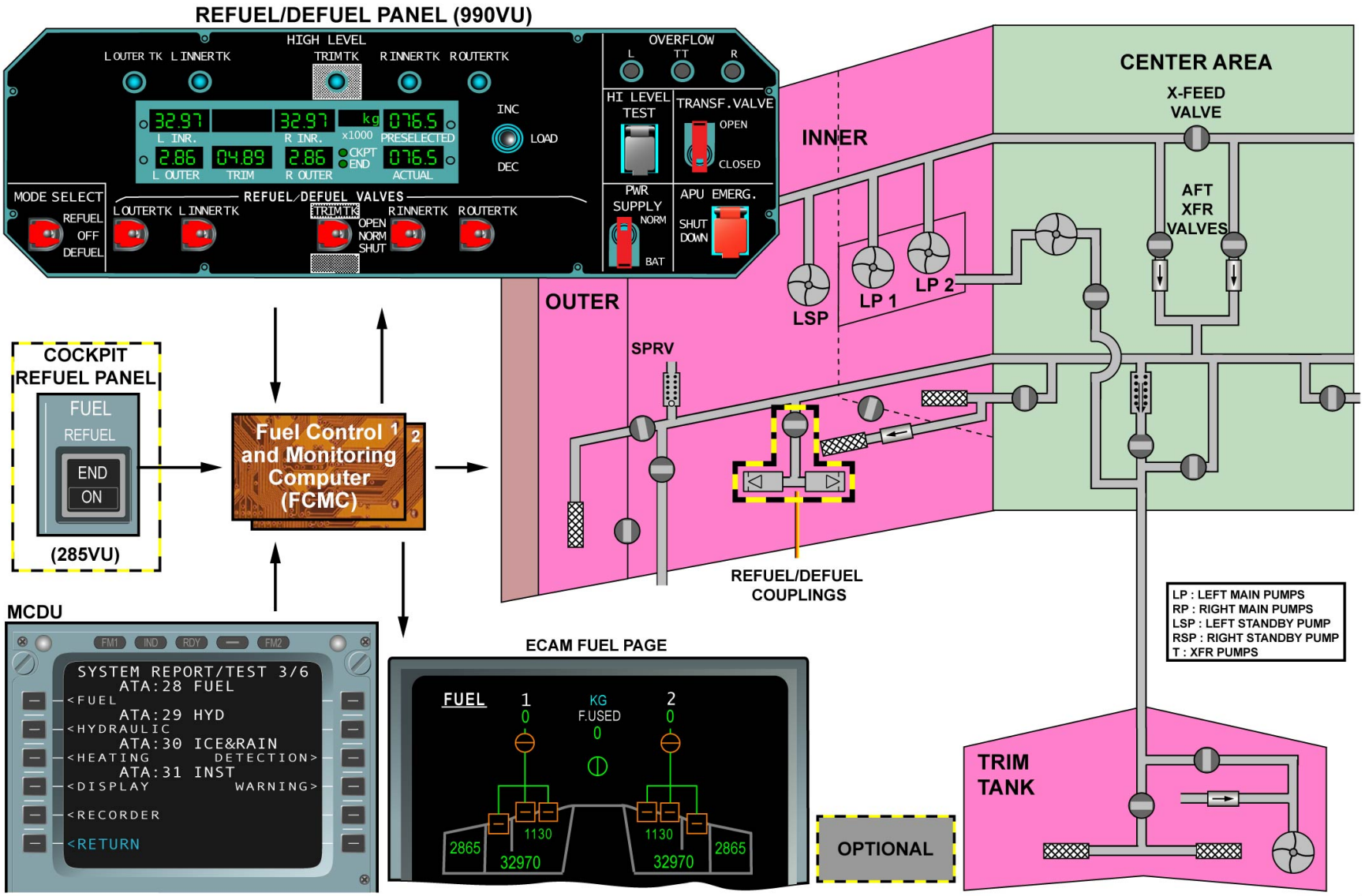
REFUEL/DEFUEL PANEL (990VU)
HIGH LEVEL
L OUTER TK
L INNER TK
TRIM TK
R INNER TK
R OUTER TK
OVERFLOW
L
TT
R
HI LEVEL TEST
TRANSF. VALVE
OPEN
CLOSED
INC
LOAD
DEC
L INR.
R INR.
x1000
PRESELECTED
L OUTER
TRIM
R OUTER
CKPT
END
ACTUAL
MODE SELECT
REFUEL
OFF
DEFUEL
REFUEL/DEFUEL VALVES
L OUTER TK
L INNER TK
TRIM TK
OPEN
NORM
SHUT
R INNER TK
R OUTER TK
PWR SUPPLY
NORM
BAT
APU EMERG.
SHUT DOWN
INNER
OUTER
CENTER AREA
X-FEED VALVE
AFT XFR VALVES
LSP
LP 1
LP 2
SPRV
REFUEL/DEFUEL COUPLINGS
COCKPIT REFUEL PANEL
FUEL
REFUEL
END
ON
(285VU)
Fuel Control and Monitoring Computer (FCMC)
1
2
MCDU
FM1
IND
RDY
FM2
SYSTEM REPORT/TEST 3/6
ATA:28 FUEL
<FUEL
ATA:29 HYD
<HYDRAULIC
ATA:30 ICE&RAIN
<HEATING DETECTION>
ATA:31 INST
<DISPLAY WARNING>
<RECORDER
<RETURN
ECAM FUEL PAGE
FUEL
1
0
KG
F.USED
0
2
0
2865
1130
32970
1130
32970
2865
LP : LEFT MAIN PUMPS
RP : RIGHT MAIN PUMPS
LSP : LEFT STANDBY PUMP
RSP : RIGHT STANDBY PUMP
T : XFR PUMPS
OPTIONAL
TRIM TANK

GENERAL

REFUEL/DEFUEL D/O (A330-300)

DESCRIPTION

Here is a description of the refuel/defuel system in different conditions.

REFUEL/DEFUEL CONTROL PANEL

The primary components of the refuel/defuel control panel are:
- the PoWeR SUPPLY (NORM/BAT) switch, allowing refuel/defuel on batteries HOT BUS power supply if there is no normal supply,
- the HI LEVEL TEST switch,
- the APU EMERGency SHUTDOWN switch,
- the preselect (LOAD select) switch, used for automatic refuel only,
- the MODE SELECT switch secured in OFF position
- the REFUEL/DEFUEL VALVES switches secured in NORM position,
- the refuel indicator panel.

G7508471 - G3NT1T0 - FM28D800000009

REFUEL/DEFUEL PANEL (990VU)

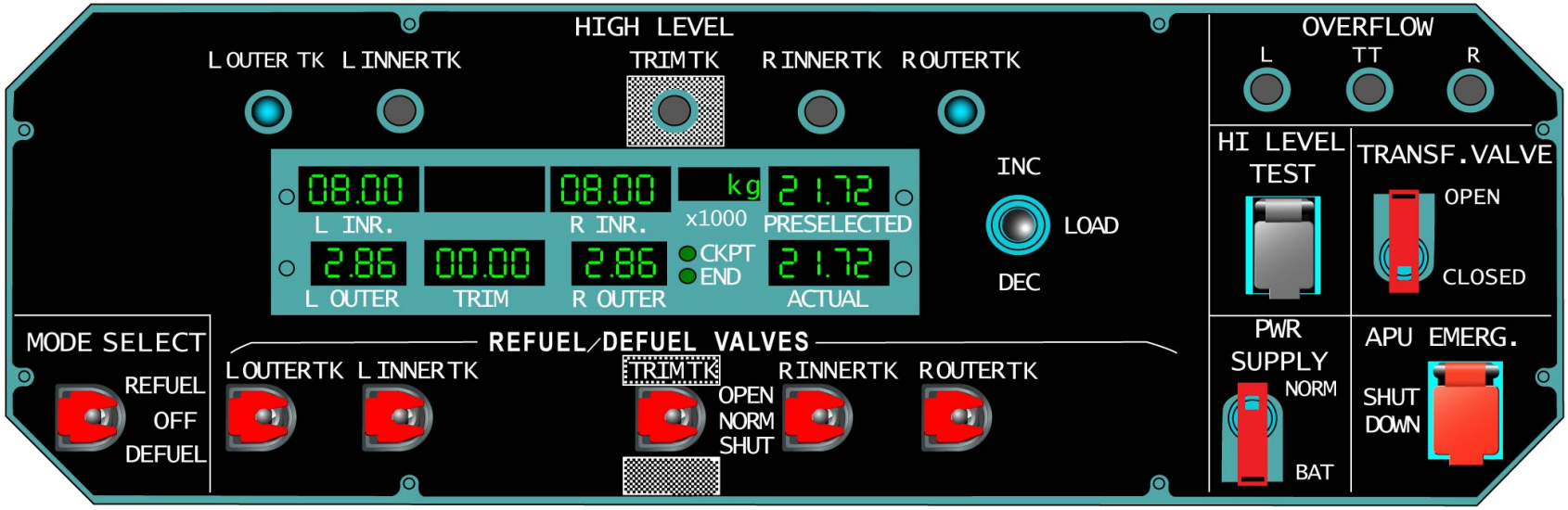

DESCRIPTION - REFUEL/DEFUEL CONTROL PANEL

G7508471 - G3NT1T0 - FM28D800000009

REFUEL/DEFUEL D/O (A330-300)

DESCRIPTION (continued)

REFUEL/DEFUEL COUPLINGS

One refuel/defuel coupling is installed on the RH wing. One additional coupling is installed as an option on the LH wing. Each coupling is attached to the front face of the wing front spar. Each refuel/defuel coupling has a Y-shaped hollow body, with a circular housing in the center receiving the refuel isolation valve. Each refuel/defuel coupling is equipped with two refuel adaptors. Each refuel adaptor is protected by a removable cap.

REFUEL ISOLATION VALVES

The refuel isolation valve is electrically controlled via a solenoid and is hydraulically operated. When the valve is energized and a fuel pressure is supplied, the isolation valve opens. The isolation valve has a manual override button that can be used to open the valve in case of electrical or solenoid failure. The refuel isolation valve is installed in the center of each refuel/defuel coupling.

OUTER, INNER, TRIM INLET VALVES AND ACTUATORS

All inlet valves are of the ball valve type and are operated by a single DC motor actuator installed with a visual open/close indicator. They are connected to the refuel/defuel gallery and let fuel distribution to the various tanks by dedicated supply lines.
Two outer tank inlet valves, one for each outer tank, are installed in the inner tanks and attached to the front face of the wing rear spar. Their electrical actuators are installed on the rear face of this spar.
Inner tank inlet valves are installed in the fuel supply line to both inner tanks. These valves are installed in the center fuselage area and attached to the front face of the center fuselage rear spar. Their actuators are attached to the rear face of this spar.
A trim tank inlet valve is installed into the trim tank and its actuator is attached under the bottom skin.

EMERGENCY ISOLATION VALVES

The emergency isolation valves are of the ball valve type, each one operated by two DC motor actuators. One valve is installed in each inner tank and its actuator is attached to the wing rear spar. During normal operation, both emergency isolation valves are open to let fuel quantity balancing between the FWD section and the AFT section of each inner tank.

CHECK VALVES

Two check valves prevent fuel flow from the refuel gallery to the engine feed gallery in case any aft transfer valve is stuck in the open position.

REFUEL DIFFUSERS

The fuel is delivered into the fuel tanks through diffusers.

SURGE-PRESSURE RELIEF VALVE

During refueling, two surge-pressure relief valves prevent pressure surge into the refuel gallery. If the fuel pressure is more than 65 psi the valve opens to decrease the pressure in the gallery.

DEPRESSURIZING VALVE

A depressurizing valve isinstalled on the refuel gallery in the right inner tank only. After refuel operation is completed, the depressurizing valve releases the remaining pressure in the refuel gallery into the right inner tank. The valve operates between 2 and 3 psi.

RESTRICTOR VALVE

A one-way restrictor valve is installed on the refuel gallery upstream of the trim pipe isolation valve. It decreases the fuel flow directed to the trim tank and lets the fuel flow freely in the opposite direction.

G7508471 - G3NT1T0 - FM28D800000009

REFUEL GALLERY LOW-PRESSURE SWITCH

A LP switch, attached to the center fuselage rear spar, detects any LP condition (below 6 psi) in the refuel gallery. If a low pressure condition is detected during refueling of trim tank with the APU running (fed by the AFT APU pump), the trim transfer line is isolated. The refueling of the trim tank is temporarily stopped and the APU is fed by the FWD APU pump, until the LP condition disappears.

G7508471 - G3NT1T0 - FM28D800000009

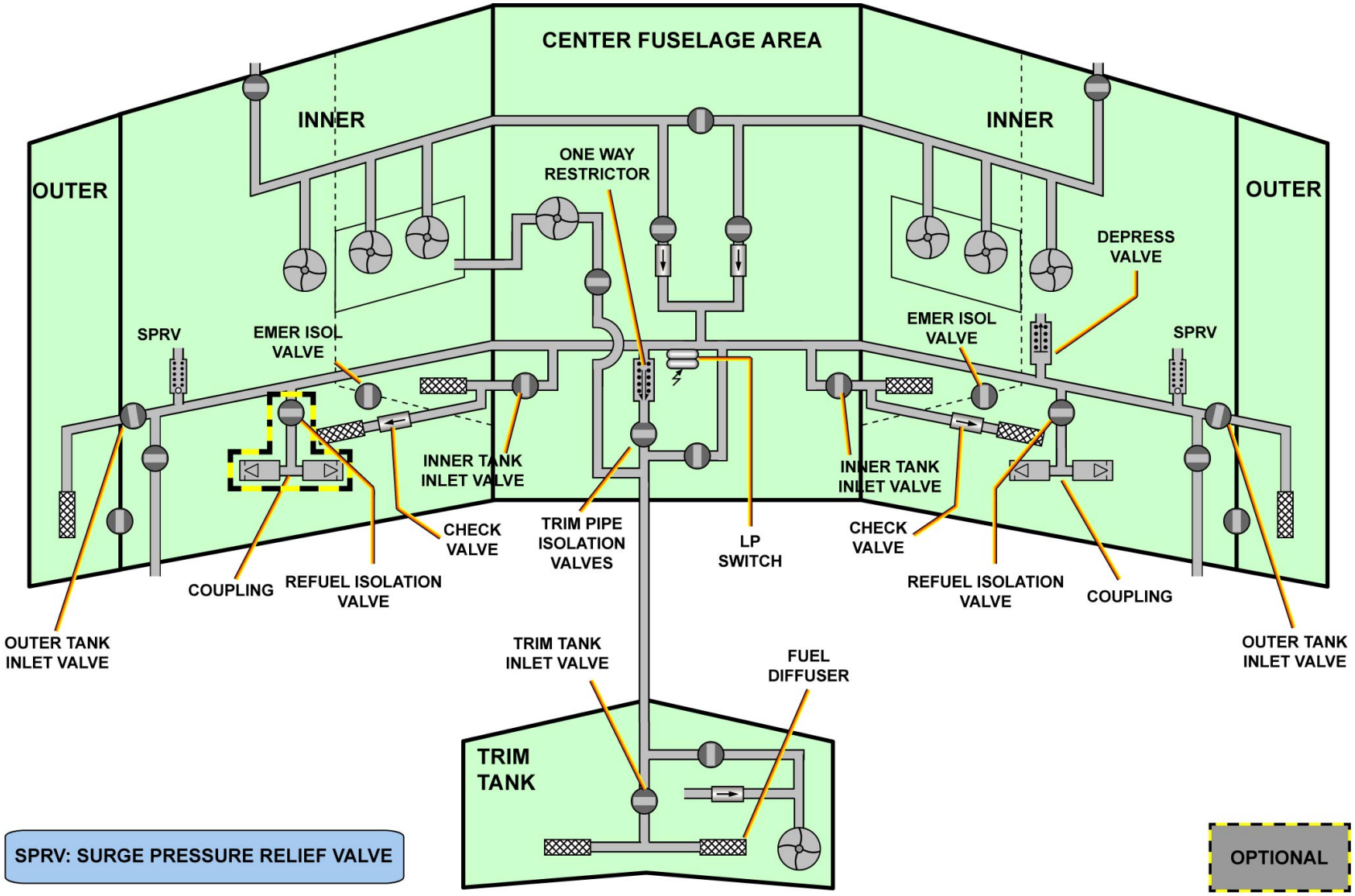

DESCRIPTION - REFUEL/DEFUEL COUPLINGS ... REFUEL GALLERY LOW-PRESSURE SWITCH

G7508471 - G3NT1T0 - FM28D800000009

This Page Intentionally Left Blank

G7508471 - G3NT1T0 - FM28D800000009

REFUEL/DEFUEL D/O (A330-300)

OPERATION

When the quick-release door of the refuel/defuel control panel is open, a door operated microswitch sends a signal to the FCMCs to supply the refuel/defuel electrical circuits. Once the refuel/defuel panel is powered, any refuel, defuel or ground transfer can be initiated.
The Air Data Inertial Reference Systems (ADIRS) are set to NAV so that the FCMCs receive the A/C attitude information required for an optimization of the tanks fuel quantity calculation accuracy.

NOTE: Note: If external electrical power or APU electrical power is not available, it is possible to use A/C batteries to do a refueling. But on batteries, the ADIRS do not send A/C attitude information to the FCMCs. Therefore after a refuel on batteries, there could be a difference of up to 750 kg between the set fuel quantity and the actual fuel quantity.

HI-LEVEL TEST

When the HI LEVEL TEST P/BSW guard is pushed in and held, it sends a signal to the FCMCs which do a continuity test of the high-level and overflow sensors and their circuits. If these are serviceable the FCMCs change the HIGH LEVEL blue lights and the OVERFLOW amber lights to their opposite condition. In addition the CKPT and END lights come on and the fuel quantity, PRESELECTED for Preselected Fuel Quantity (PFQ) and ACTUAL for Fuel On Board (FOB) show all 8's. At the same time, the FCMC tests the inlet valves operation and checks the continuity of the refuel isolation valves circuit.
When the HI LEVEL TEST P/BSW is released out, the following lights has to be checked:
- the HIGH LEVEL and OVERFLOW lights go back to their initial condition,
- the fuel quantity, PRESELECTED (PFQ) and ACTUAL (FOB) displays go back to their initial values,
- the CKPT and END lights go off.

G7508471 - G3NT1T0 - FM28D800000009

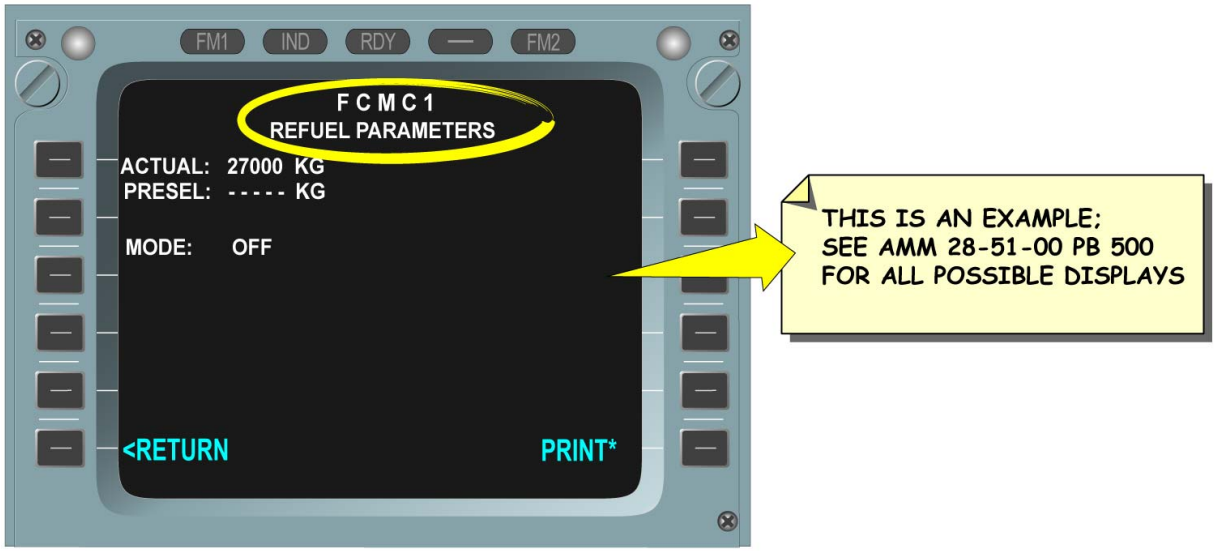

REFUEL/DEFUEL PANEL (990VU)

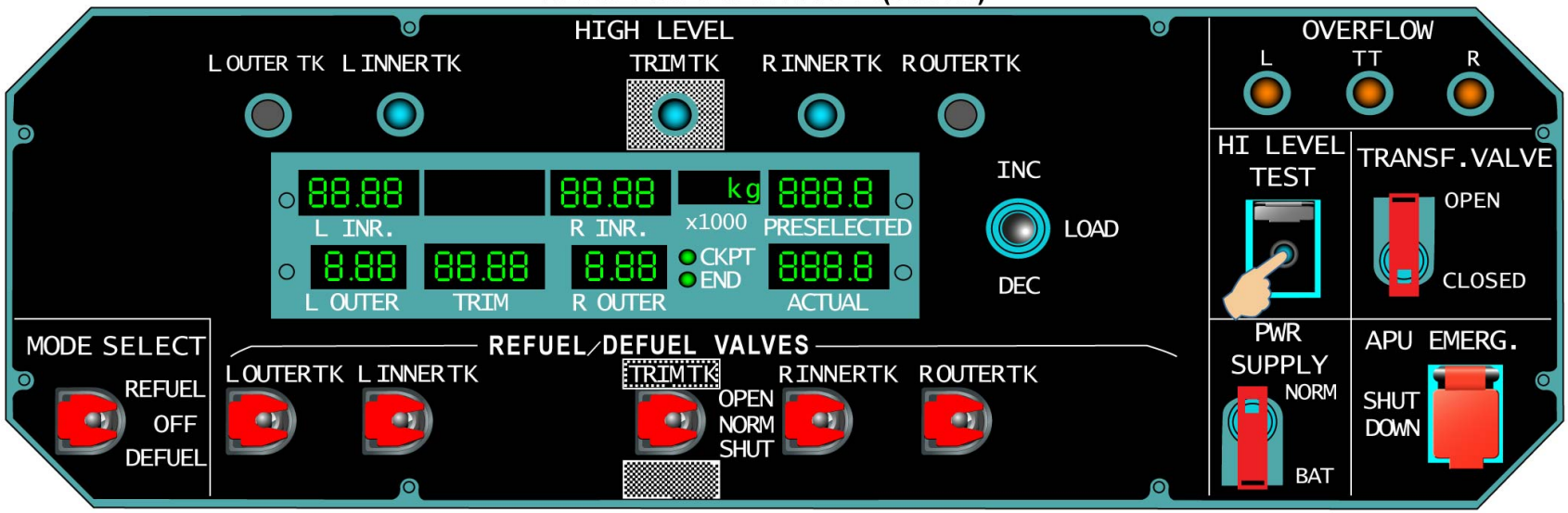

OPERATION - HI-LEVEL TEST

G7508471 - G3NT1T0 - FM28D800000009

REFUEL/DEFUEL PANEL (990VU)

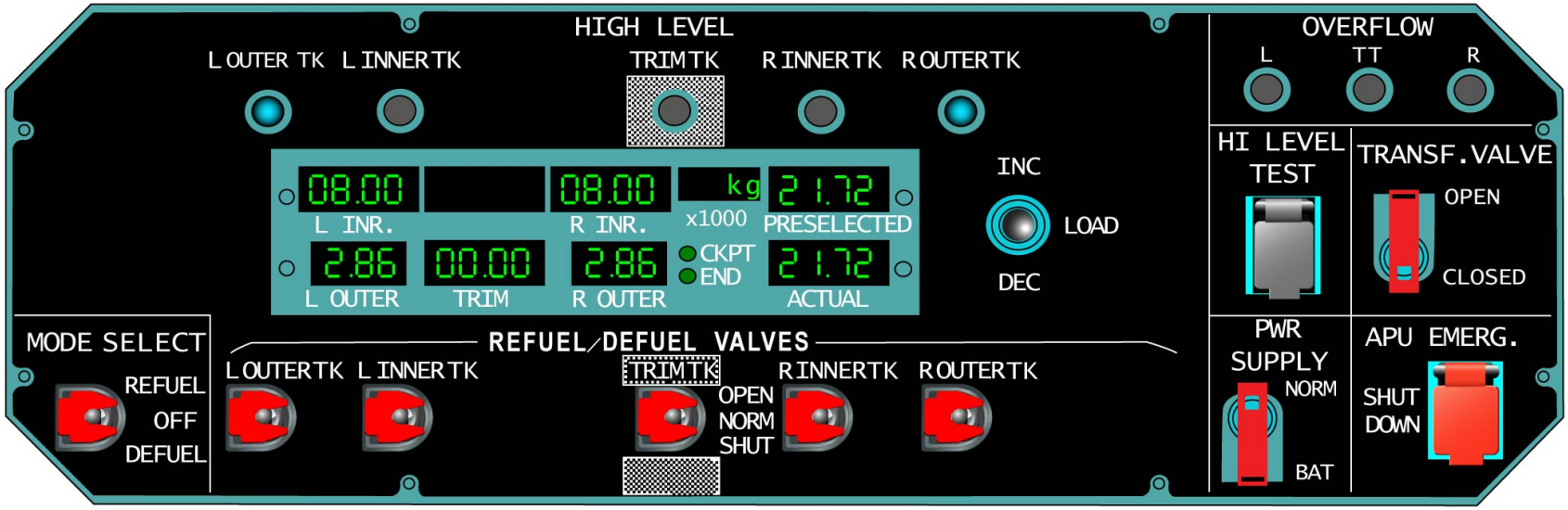

OPERATION - HI-LEVEL TEST

This Page Intentionally Left Blank

G7508471 - G3NT1T0 - FM28D800000009

REFUEL/DEFUEL D/O (A330-300)

OPERATION (continued)

AUTOMATIC PRESSURE REFUEL

During an automatic refuel and after the high level test, the PRESELECTED switch is used to preselect the fuel quantity on the PRESELECTED display. To initiate a refuel, this quantity must be set to a greater value than the ACTUAL indication by more than 200 kg.

The FCMCs receive this preselection and refer to the memorized post-refuel distribution chart to select the tanks to be refueled and to calculate their respective fuel quantity target.

When the MODE SELECT switch is set to REFUEL, the FCMC supplies 28 VDC to the refuel/defuel isolation valve solenoids. When a refuel pressure is supplied, the isolation valves hydraulically open and let the fuel go into the refuel/defuel gallery. Then, the FCMC controls all the tank inlet valve relays involved in the refueling from the distribution chart. The involved tanks are refueled simultaneously.

As the individual tank fuel quantity increases, the FCMC will close the related inlet valve when the fuel tank quantity target is reached or the high-level sensors become wet.

At the end of the refuel, the END light comes on steady to indicate a complete successful refueling. The MODE SELECT switch is set to OFF and the refuel isolation valve closes.

An automatic refuel may not start or may be aborted by the FCMC if any of the following conditions is met:

- "BLOCK" fuel value entered in MCDU "INIT" page,
- OUTR TK XFR or T TANK MODE P/BSW not in AUTO mode,
- any REFUEL/DEFUEL VALVES switch not in NORM position,
- any inlet valve position disagree with FCMC command,
- any surge tank overflow fuel sensor becomes wet,
- any jettison valve is detected open (if installed),
- any high level sensor failure,
- any tank fuel quantity indication function inoperative.

G7508471 - G3NT1T0 - FM28D800000009

REFUEL/DEFUEL PANEL (990VU)

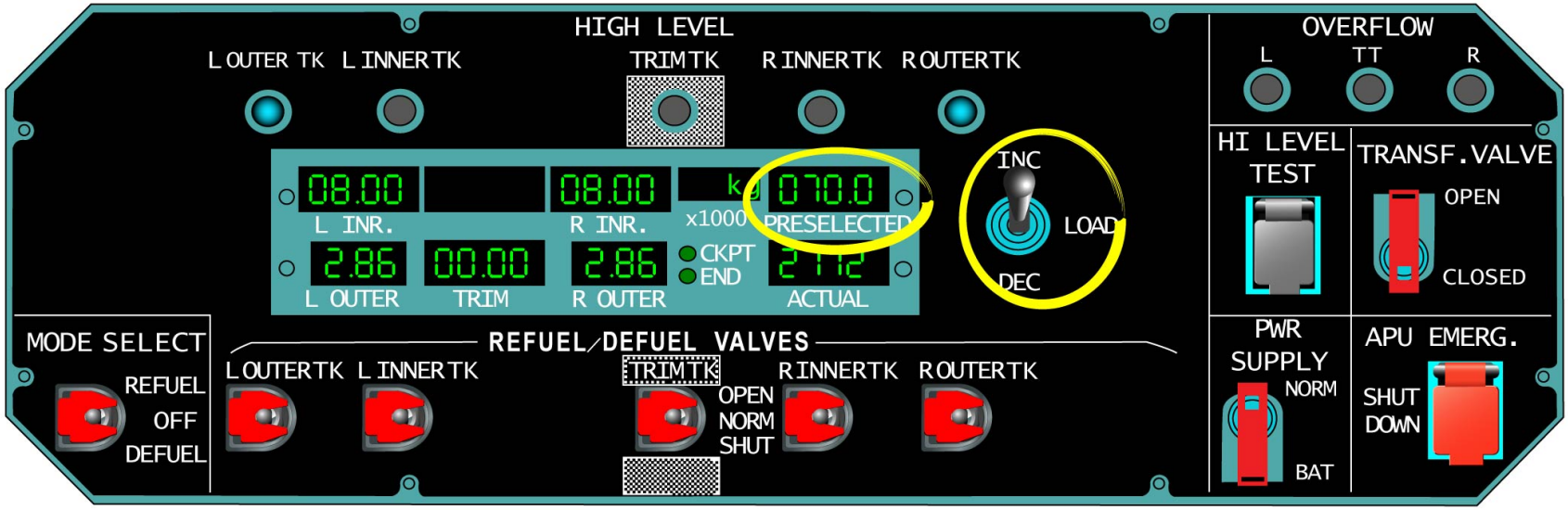

OPERATION - AUTOMATIC PRESSURE REFUEL

G7508471 - G3NT1T0 - FM28D800000009

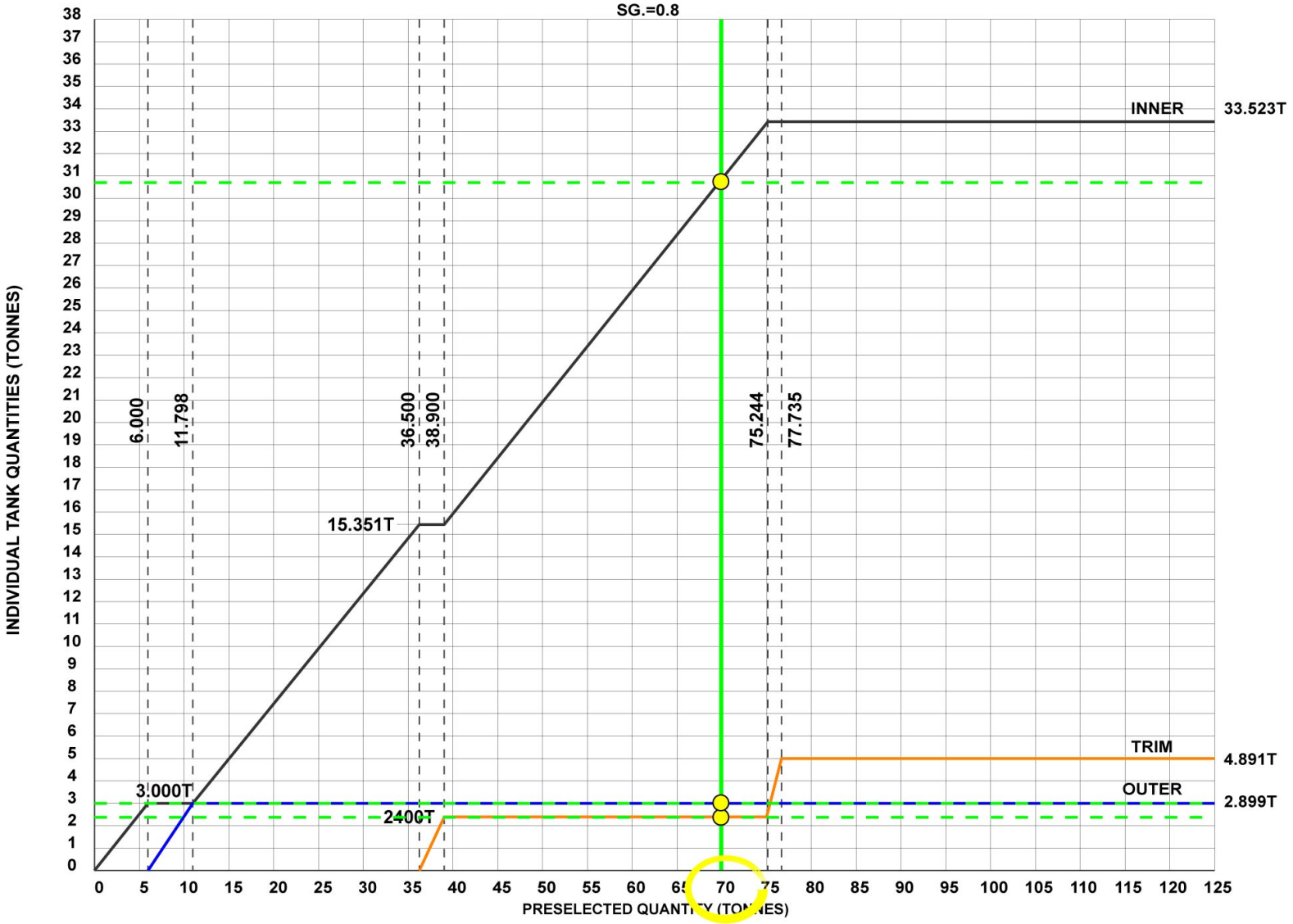

OPERATION - AUTOMATIC PRESSURE REFUEL

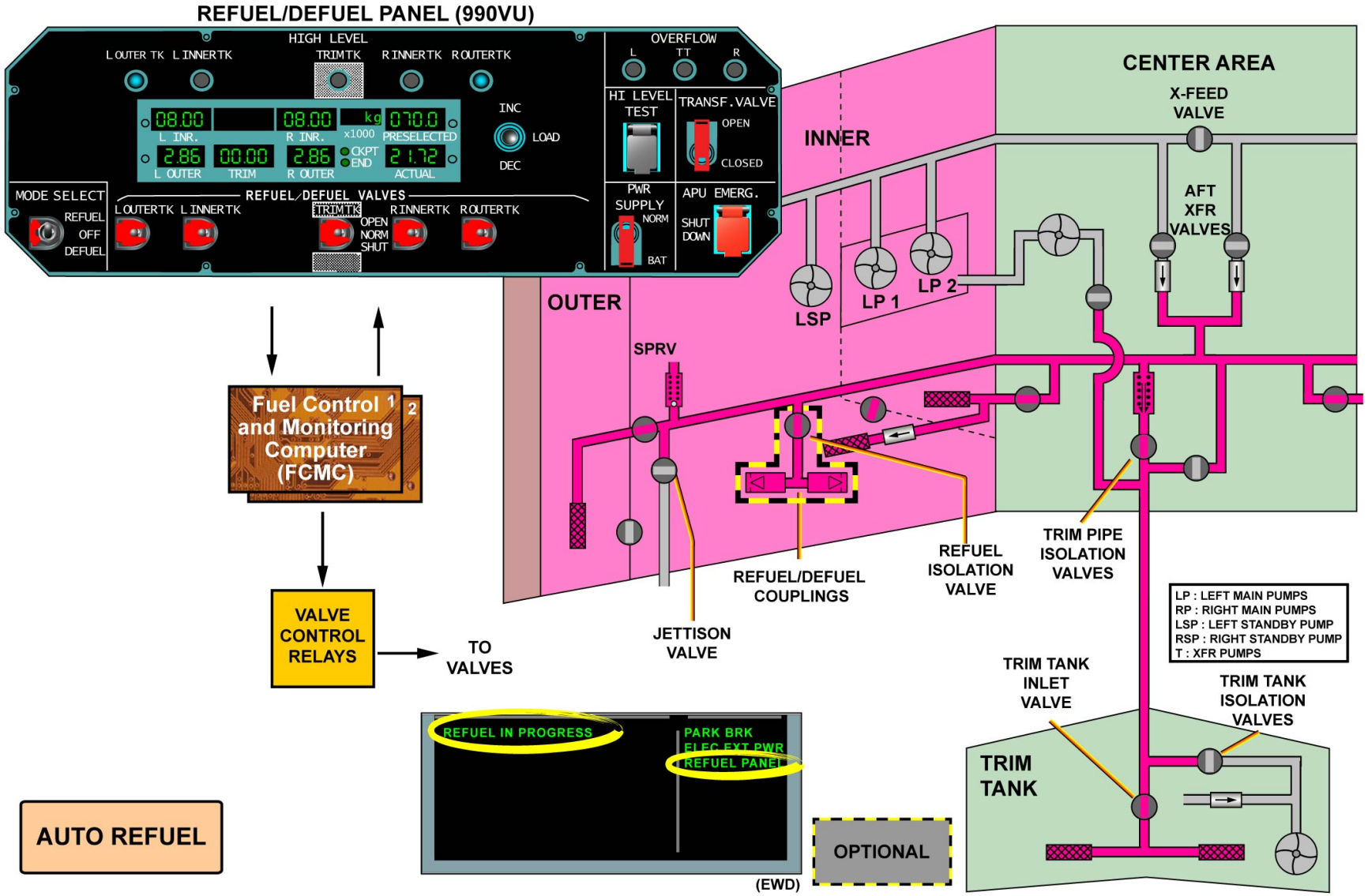

OPERATION - AUTOMATIC PRESSURE REFUEL

G7508471 - G3NT1T0 - FM28D800000009

REFUEL/DEFUEL PANEL (990VU)

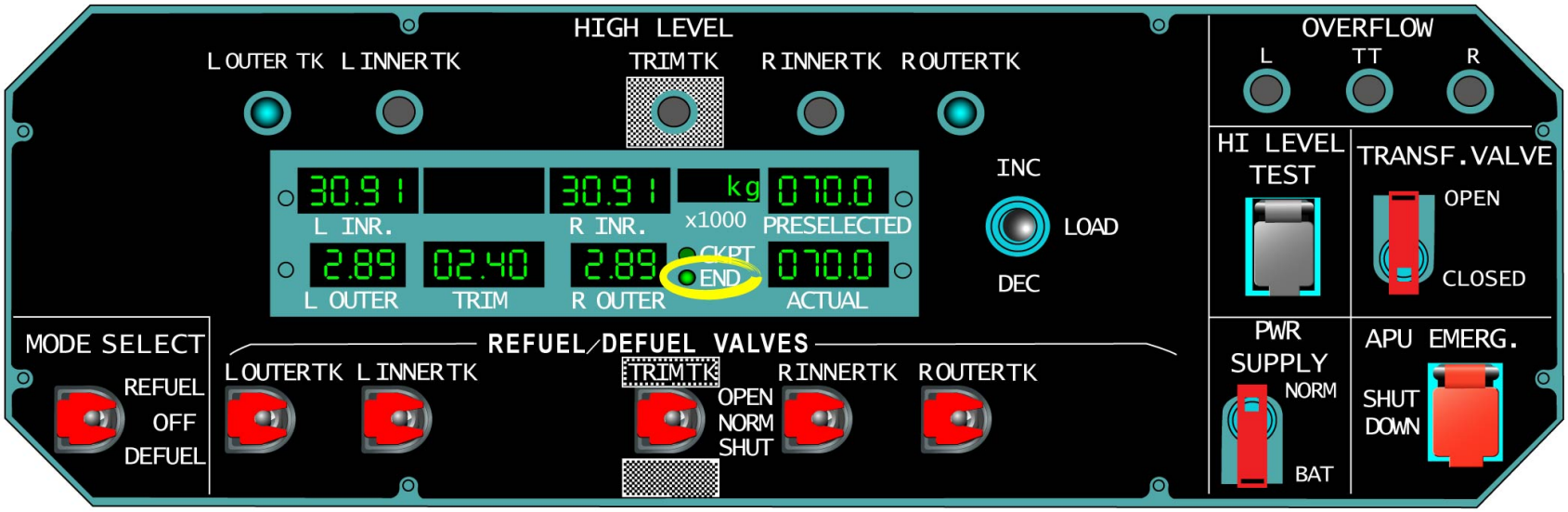

AUTO REFUEL

OPERATION - AUTOMATIC PRESSURE REFUEL

G7508471 - G3NT1T0 - FM28D800000009

This Page Intentionally Left Blank

G7508471 - G3NT1T0 - FM28D800000009

REFUEL/DEFUEL D/O (A330-300)

OPERATION (continued)

REFUEL ABORT

The refuel process is aborted in case of:
- MAN XFR selection, or
- Inlet valve failure or high level test failure, or
- Overflow detection with an amber light on the refuel/defuel panel.

In this case, the FCMCs abort the refuel, the MCDU displays the refuel parameters and the END LIGHT on the refuel/defuel panel flashes.

G7508471 - G3NT1T0 - FM28D800000009

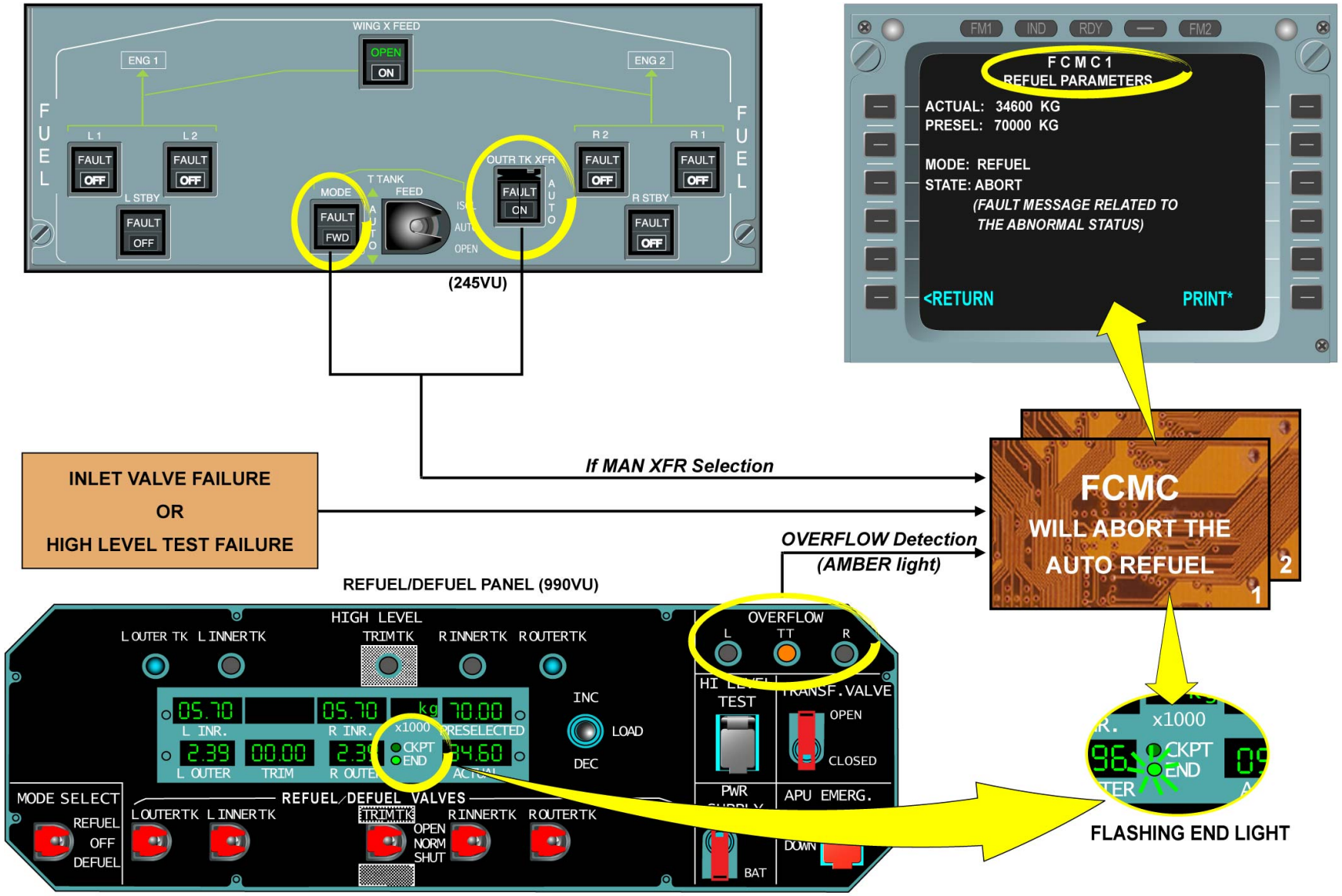

OPERATION - REFUEL ABORT

G7508471 - G3NT1T0 - FM28D800000009

REFUEL/DEFUEL D/O (A330-300)

OPERATION (continued)

MANUAL PRESSURE REFUEL

A manual refuel procedure is only required when an automatic refuel aborts due to a system failure. On the refuel/defuel panel, the PRESELECTED quantity must be set to zero or 500 kg below the ACTUAL quantity. The REFUEL/DEFUEL VALVES switches of the tanks to be refueled are set to OPEN and the REFUEL/DEFUEL VALVES switches of the tanks not to be refueled are set to SHUT. The MODE SELECT switch is then set to REFUEL position to send a signal to the FCMC, which connects a 28 VDC supply to the solenoid of the refuel isolation valves. If refuel pressure is available, the refuel isolation valves open. The involved tanks are refueled simultaneously.

NOTE: Note: The refueling distribution chart, shown in the automatic refuel subtopic, can be referred to (through the AMM) to ensure optimization of fuel distribution during manual refueling.

Each inlet valve can be closed manually, by moving the related REFUEL/DEFUEL VALVES switch to SHUT or NORM, but the FCMC automatically closes the inlet valve when the related hi-level sensors become wet. All the selected fuel tanks are normally refueled at the same time, except when the FCMC applies the overbalance protection.

To keep a safe longitudinal balance, the trim tank inlet valve will not open unless one of these conditions is met:

- the two inner tanks fuel quantities are above 14000 kg,
- one inner tank fuel quantity is above 14000 kg and the other inner tank inlet valve is open,
- the two inner tank inlet valves are open.

At the end of the refuel, the MODE SELECT switch is set to OFF, the refuel isolation valves close.

A manual refuel may not start or may be aborted by the FCMC if any of the following conditions is met:

- OUTR TK XFR or T TANK MODE P/BSW not in AUTO mode,
- any surge tank overflow fuel sensor becomes wet,
- any jettison valve is detected open,
- any high level sensor failure.

G7508471 - G3NT1T0 - FM28D800000009

REFUEL/DEFUEL PANEL (990VU)

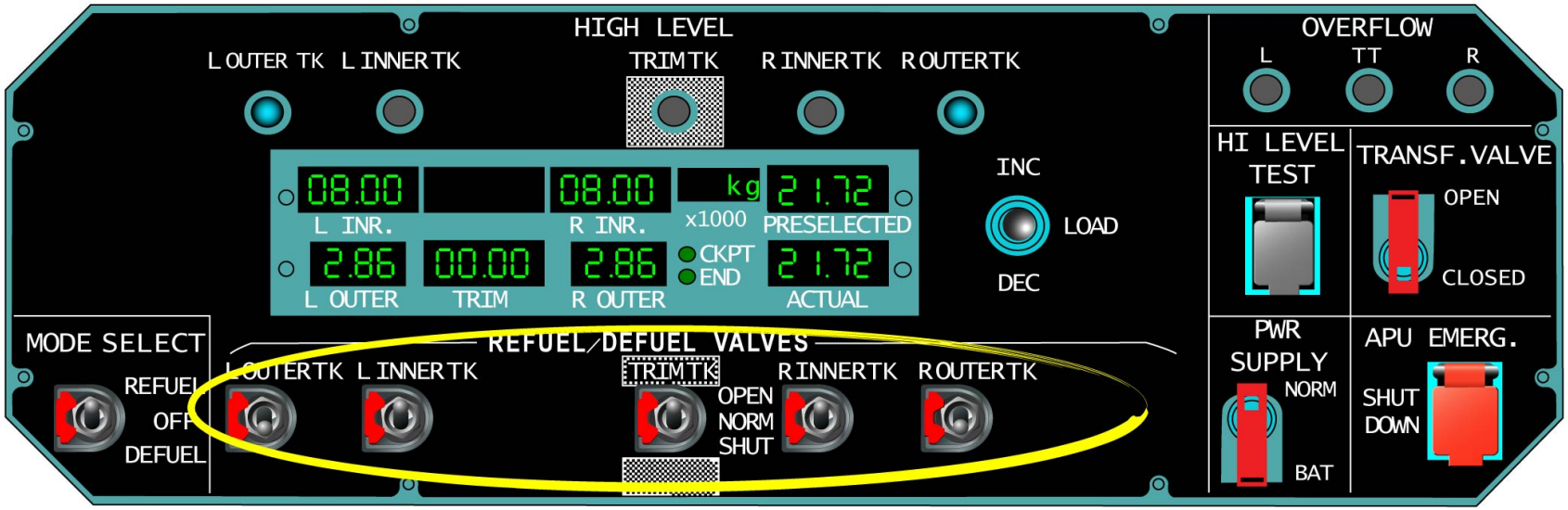

MANUAL REFUEL

OPERATION - MANUAL PRESSURE REFUEL

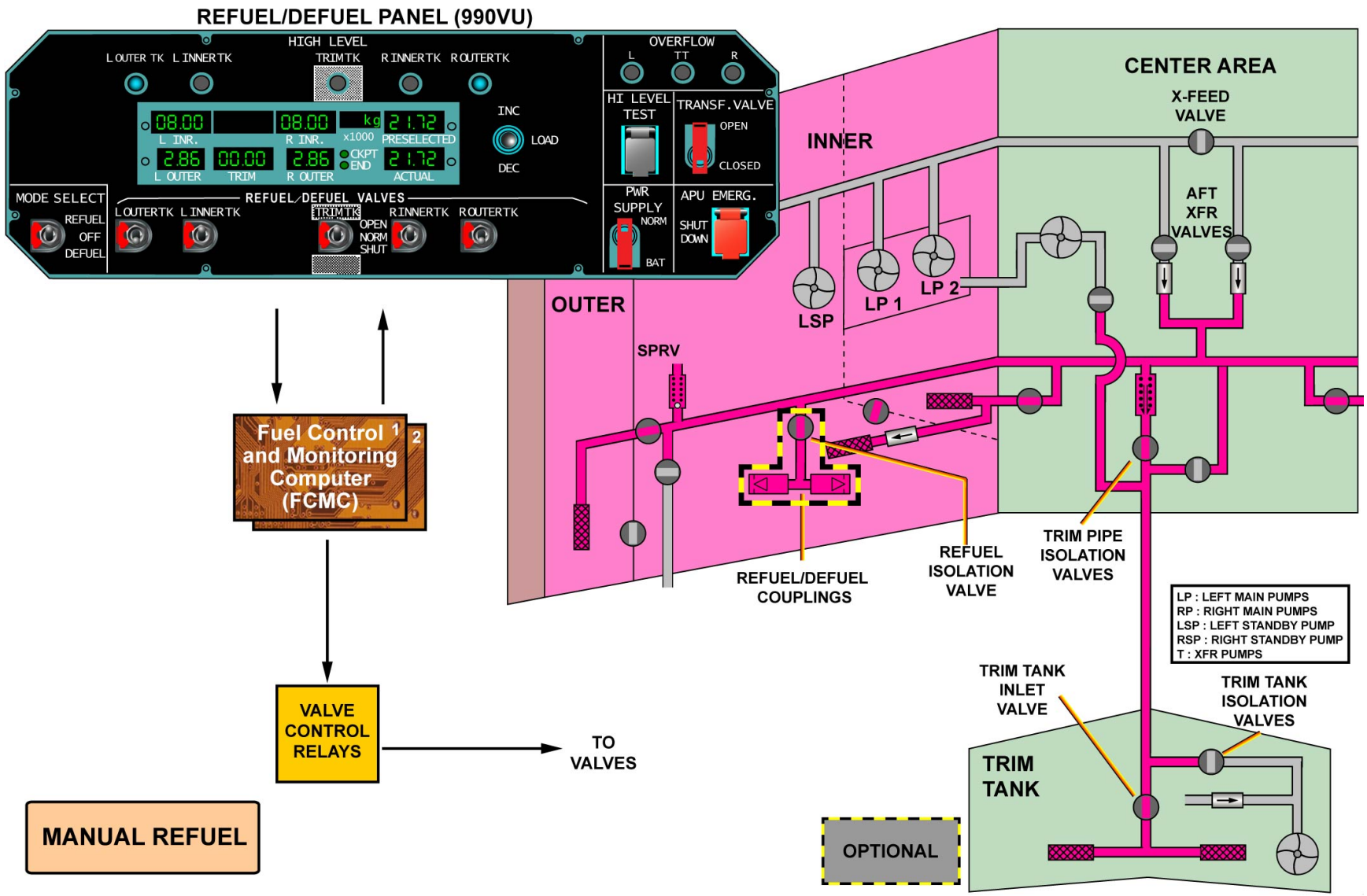

OPERATION - MANUAL PRESSURE REFUEL

G7508471 - G3NT1T0 - FM28D800000009

This Page Intentionally Left Blank

G7508471 - G3NT1T0 - FM28D800000009

REFUEL/DEFUEL D/O (A330-300)

OPERATION (continued)

COCKPIT AUTOMATIC REFUEL

Optionally, it is possible to do an automatic refuel from the cockpit. The necessary total fuel quantity must be entered via the MCDU as a BLOCK fuel on the INIT page 2. The quantity must be a minimum of 200 kg more than the FOB quantity shown on the ECAM FUEL page.

On the cockpit REFUEL panel, when the REFUEL P/BSW is pressed in, the ON white light comes on and the master FCMC does an automatic high level test. Then, if the test is OK, the FCMC starts the automatic refuel. If the high level test fails, the green END light will flash in the REFUEL P/BSW.

When the refuel is complete and correct, the green END light comes on steady in the REFUEL P/BSW.

G7508471 - G3NT1T0 - FM28D800000009

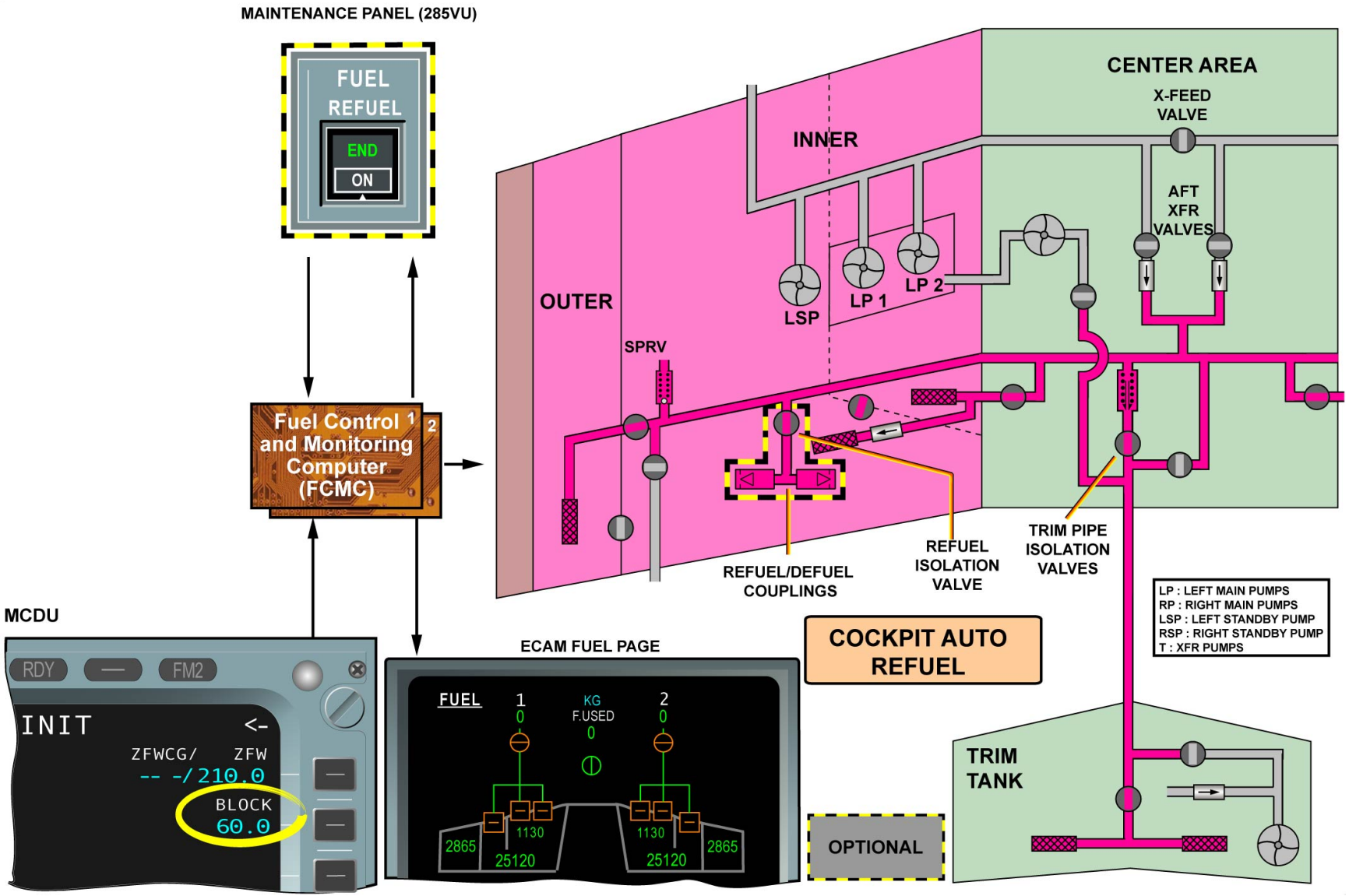

OPERATION - COCKPIT AUTOMATIC REFUEL

G7508471 - G3NT1T0 - FM28D800000009

REFUEL/DEFUEL D/O (A330-300)

OPERATION (continued)

PRESSURE DEFUEL OPERATION

This procedure describes the defueling by pressure of the wing tanks only. However it is possible to pressure defuel all fuel tanks.
If a surge tank overflow sensor is "wet", it is not possible to initiate a pressure defuel. In that case, a suction defuel is required.

NOTE: Note: One or two defuel hoses can be used to do a pressure defuel. But if only one coupling is used, it must be the one identified by the "USE THIS ADAPTOR TO DEFUEL" marking.

To do a pressure defuel, on the refuel/defuel control panel the MODE SELECT switch is set to DEFUEL and the TRANSF.VALVE switch is set to OPEN.

NOTE: Note: When the MODE SELECT switch is set to DEFUEL, the high level protection of the FCMC is inhibited.

On the cockpit overhead FUEL panel:
- the X FEED valve P/BSW is set to ON,
- the STBY or MAIN engine fuel pumps are set to on,
- once the engine fuel pumps run, the FCMC opens the aft transfer valves,
- the FCMC will prevent any overbalance condition during the defueling.

NOTE: Note: The FCMC will prevent movement of fuel from the wing tanks (the aft transfer valve stay closed) until the trim tank is empty in order to prevent any overbalance condition.

Pushed by the pumps, the fuel will flow to the couplings through the refuel/defuel gallery. When the fuel quantity in one inner tank decreases to 3500 kg, the intertank transfer valves automatically open. The fuel in the outer tanks will be transferred by gravity to the inner tanks, and then pushed in the refuel/defuel gallery by the engine fuel pumps. The defueling process can be monitored on the ECAM FUEL page.

NOTE: Note: If the outer tanks are not to be defueled, both intertank transfer valves C/Bs (6QL1 & 6QL2) must be pulled.

At the end of the pressure defuel, the STBY and/or MAIN engine fuel pumps are set to OFF, the X FEED valve is closed. The FCMC closes both aft transfer valves. On the refuel/defuel panel, the TRANSF. VALVE switch is set to CLOSED and the MODE SELECT switch is set to OFF.

G7508471 - G3NT1T0 - FM28D800000009

REFUEL/DEFUEL PANEL (990VU)

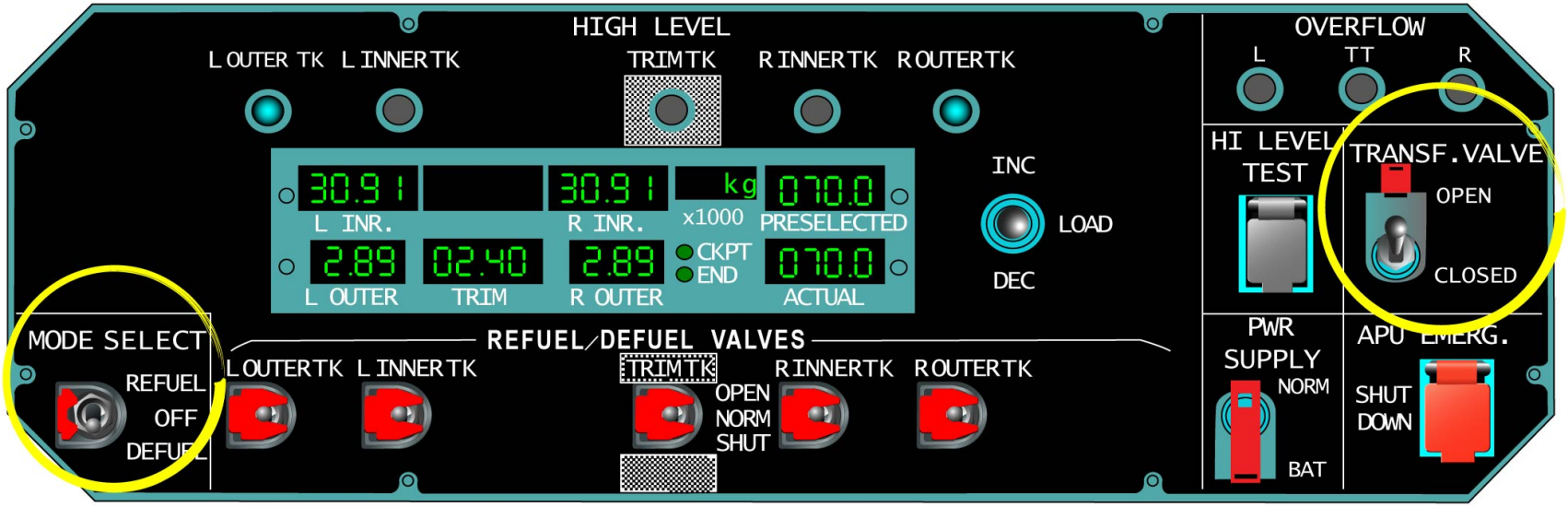

PRESSURE DEFUEL

OPERATION - PRESSURE DEFUEL OPERATION

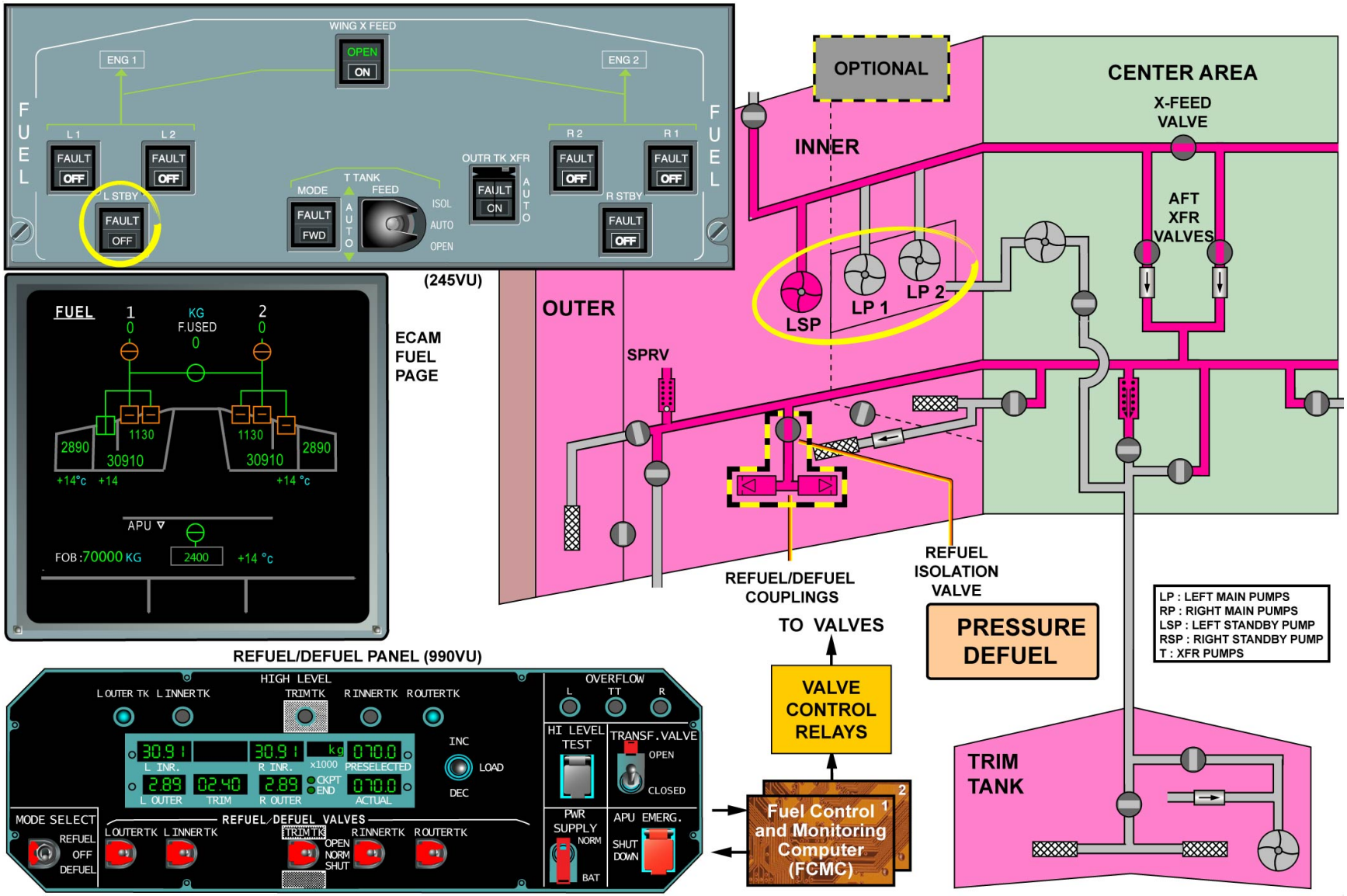

OPERATION - PRESSURE DEFUEL OPERATION

G7508471 - G3NT1T0 - FM28D800000009

This Page Intentionally Left Blank

G7508471 - G3NT1T0 - FM28D800000009

REFUEL/DEFUEL D/O (A330-300)

OPERATION (continued)

SUCTION DEFUEL OPERATION

This procedure describes the defueling by suction of the wing tanks only. However it is possible to suction defuel all fuel tanks.

NOTE: Note: The wing tanks cannot be defueled until the trim tank is empty.

On the refuel/defuel panel the MODE SELECT switch is set to DEFUEL, and the necessary fuel tank inlet valves are set to OPEN.

NOTE: Note: One or two defuel hoses can be used to do a pressure defuel. But if only one coupling is used, it must be the one identified by the "USE THIS ADAPTOR TO DEFUEL" marking.

The FCMC controls the refuel/defuel isolation valve solenoids. As soon as the suction motor of the fuel tanker is running, the refuel/defuel isolation valve is open by the fuel suction. Each inlet valve selected OPEN on the refuel/defuel panel is controlled open by the FCMC. The suction defuel operation is monitored on the refuel/defuel panel. When completed, the REFUEL/DEFUEL VALVES switches are set back to NORM, and the MODE SELECT switch is set back to OFF.

G7508471 - G3NT1T0 - FM28D800000009

REFUEL/DEFUEL PANEL (990VU)

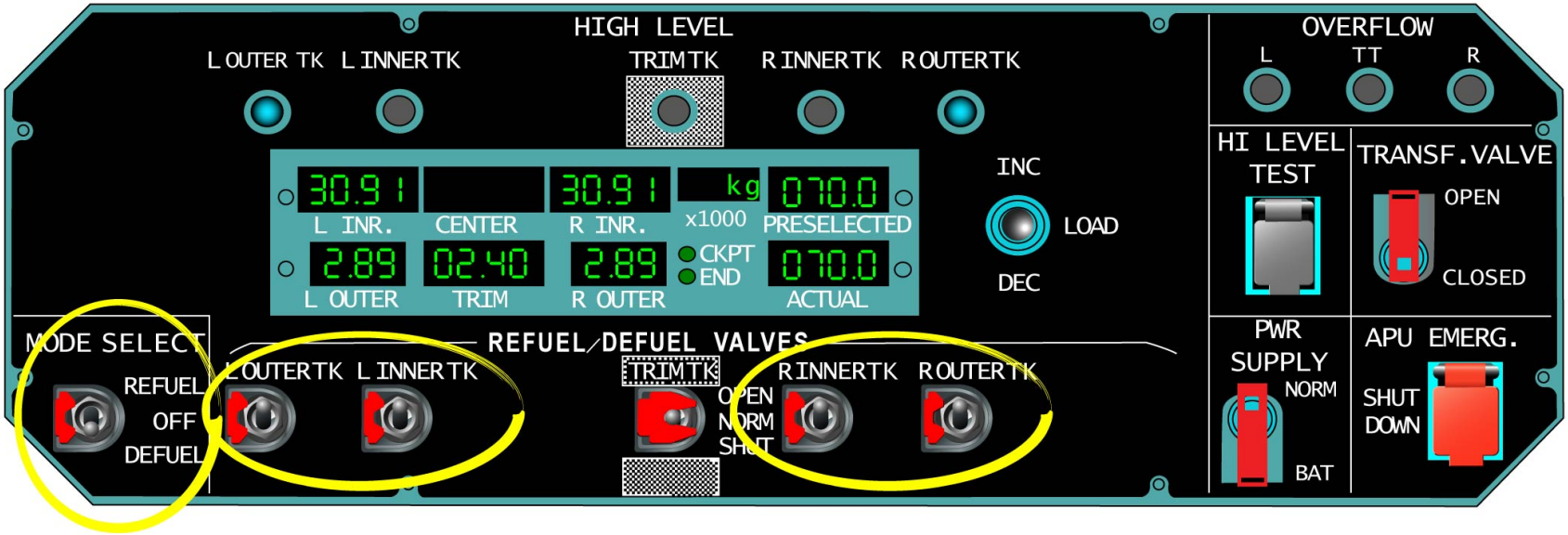

SUCTION DEFUEL

OPERATION - SUCTION DEFUEL OPERATION

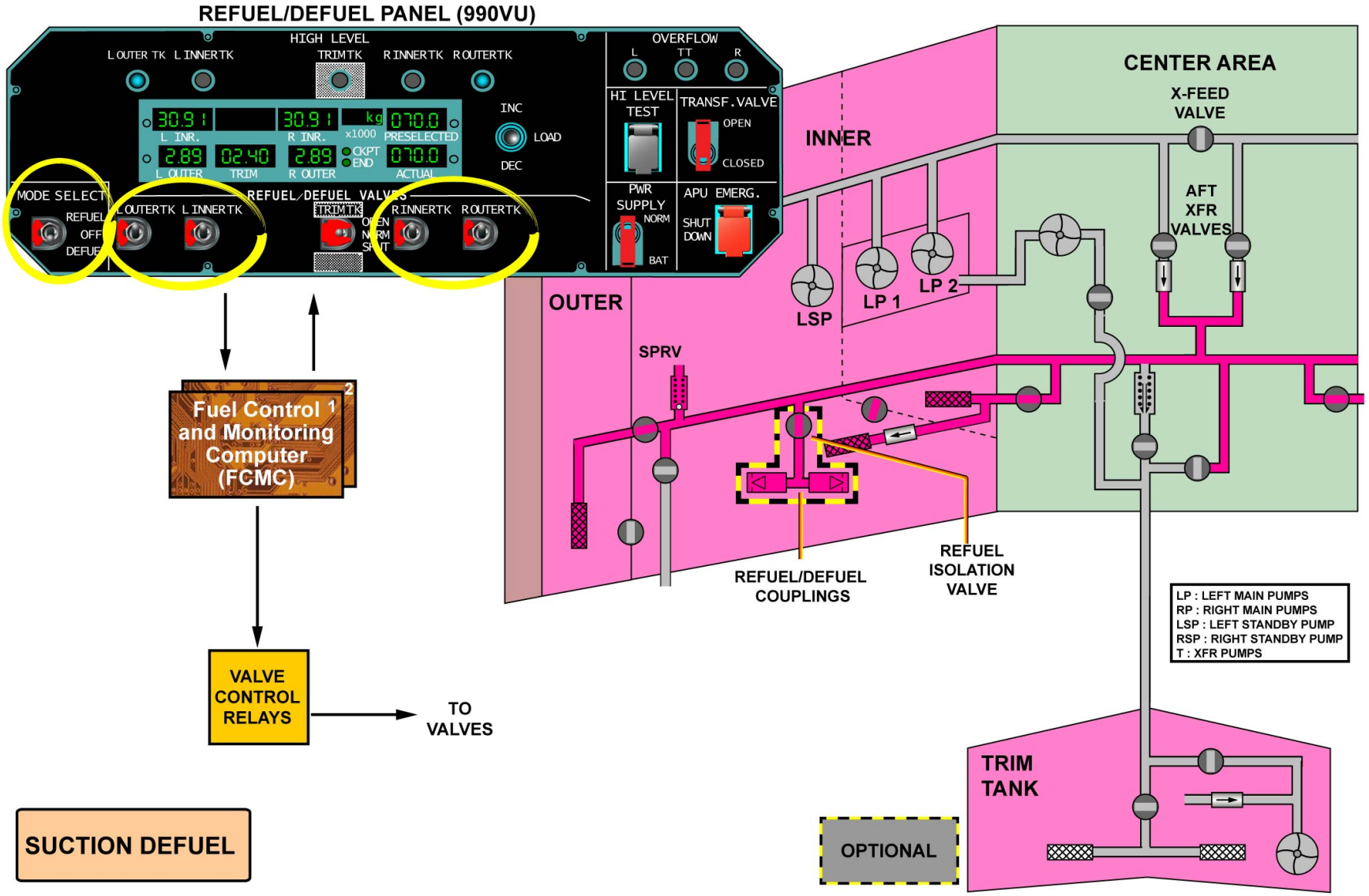

OPERATION - SUCTION DEFUEL OPERATION

G7508471 - G3NT1T0 - FM28D800000009

This Page Intentionally Left Blank

G7508471 - G3NT1T0 - FM28D800000009

REFUEL/DEFUEL D/O (A330-300)

OPERATION (continued)

INNER TANKS GROUND TRANSFERS

The ground transfer from tank to tank can be initiated from the refuel/defuel panel except for a transfer to the trim tank. In this mode, the FCMC does not energize the refuel/defuel isolation valves and keeps the trim tank inlet valve closed. The FCMC hi-level protection is active. To initiate a ground transfer, actions from the cockpit and refuel/defuel panels are necessary. The following procedure describes a ground transfer between both wing inner tanks.

On the refuel/defuel panel:

- the REFUEL/DEFUEL VALVES switch for the tank to receive fuel is selected OPEN,
- the TRANSF. VALVE switch is set to OPEN,
- the MODE SELECT switch is set to REFUEL.

On the cockpit overhead FUEL panel:

- the X FEED valve P/BSW is set to ON,
- the STBY engine pump of the "supplier" inner tank is set to on,
- once the engine pump runs, the FCMC opens the aft transfer valves,
- the fuel is thus pushed from the "supplier" inner tank through the crossfeed valve, both aft transfer valves and finally through the inlet valve of the "receiver" inner tank.

The inner tanks ground transfer is monitored from the ECAM FUEL page. When the inner tanks fuel quantity is at the required value, the engine STBY pump of the "supplier" tank is selected OFF and the X FEED valve P/BSW is selected OFF. On the refuel/defuel panel, the MODE SELECT switch is set to OFF, the REFUEL/DEFUEL VALVES switch of the "receiver" tank is set to NORM and the TRANSF. VALVE switch is set to CLOSED.

G7508471 - G3NT1T0 - FM28D800000009

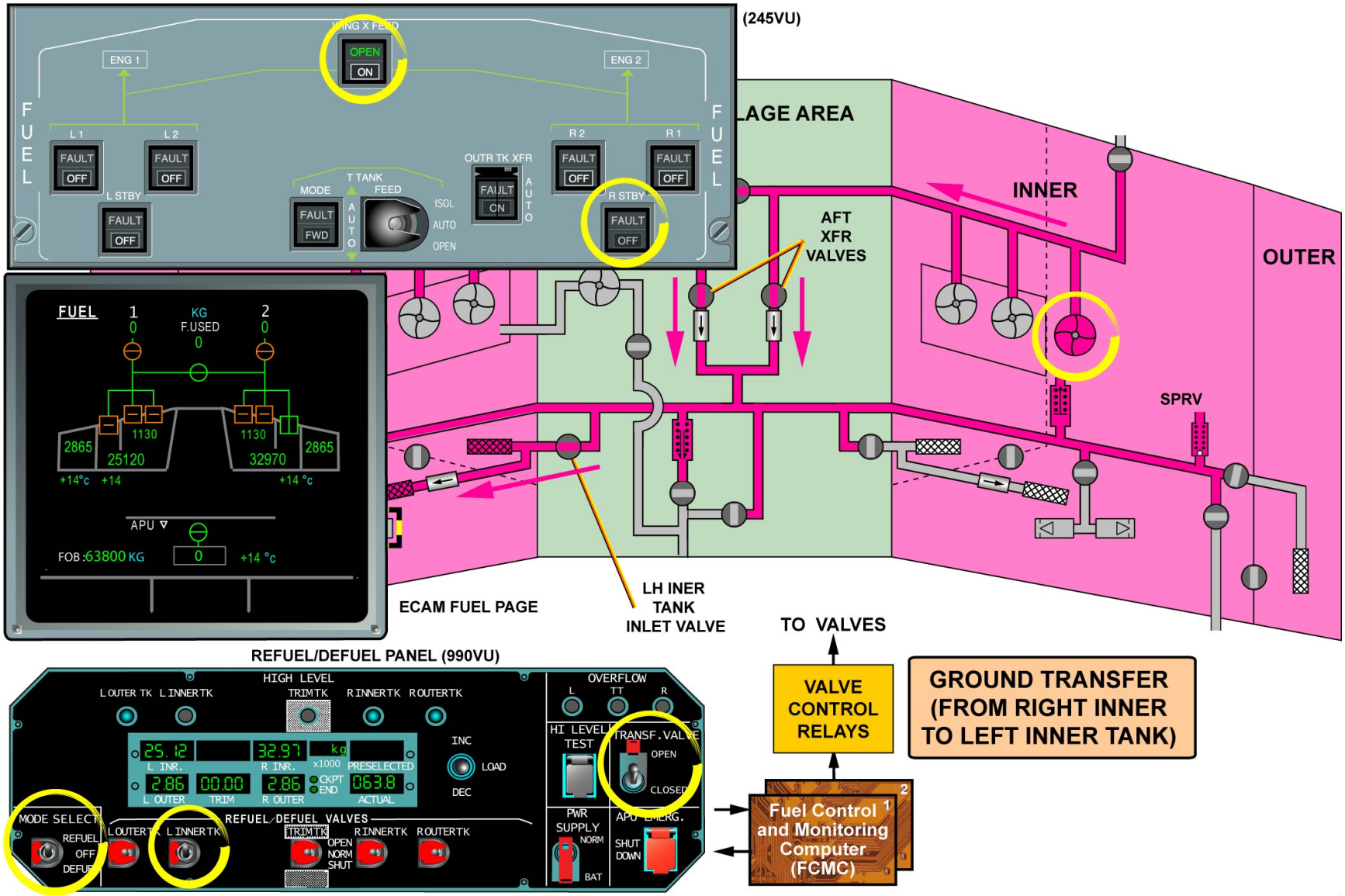

OPERATION - INNER TANKS GROUND TRANSFERS

G7508471 - G3NT1T0 - FM28D800000009

JETTISON D/O (A330-200)

GENERAL

The jettison system makes it possible to dump some of the A/C fuel in flight. The output rate is approximately 1080 kg (2382 lb) per minute. The system is activated from the JETTISON panel on the cockpit overhead panel. It can be manually stopped by the crew or automatically by the Fuel Control and Monitoring Computers (FCMCs).

G7508471 - G3NT1T0 - FM28D900000003

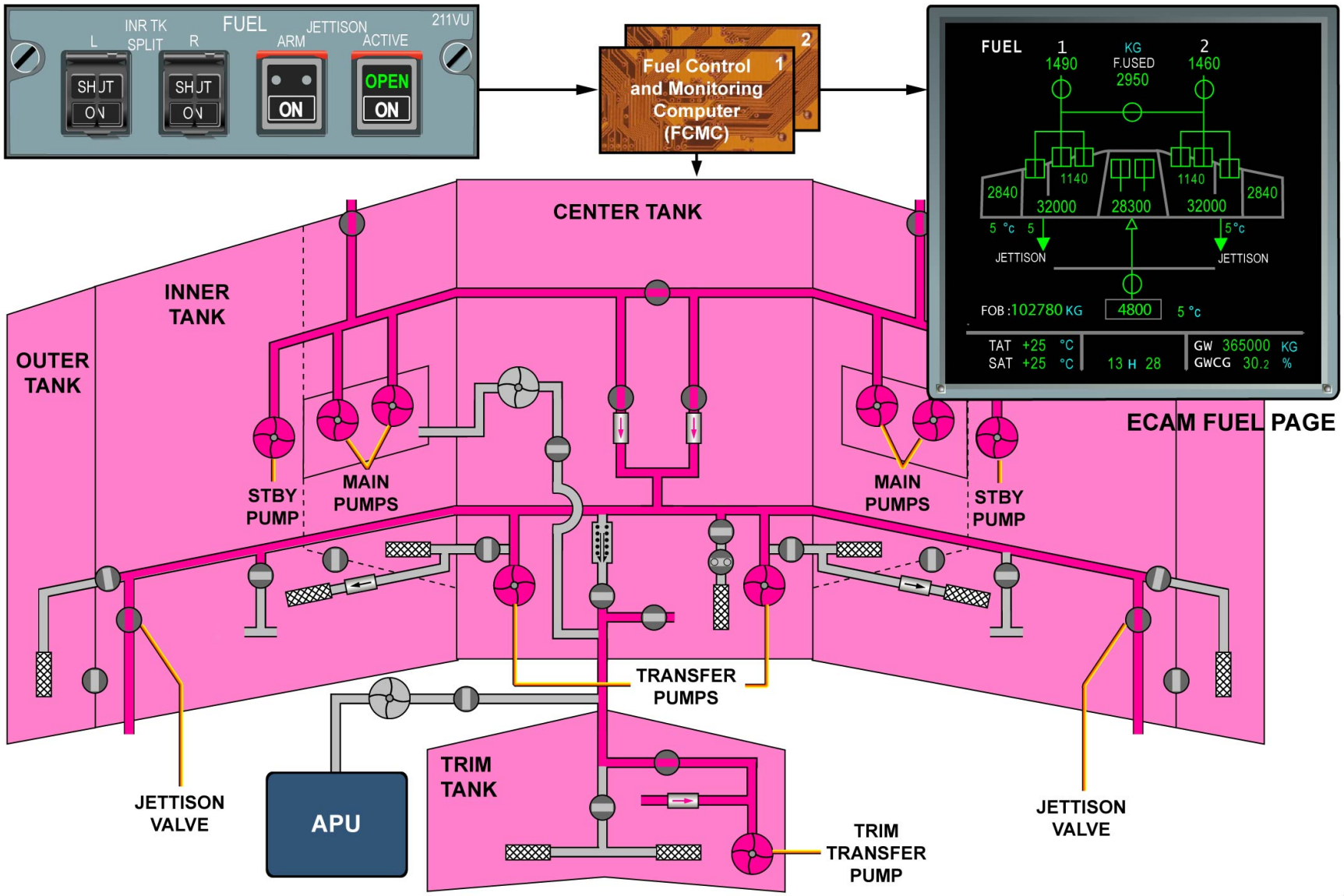

GENERAL

G7508471 - G3NT1T0 - FM28D900000003

JETTISON D/O (A330-200)

DESCRIPTION

Here is a detailed description of the jettison system.

JETTISON VALVE AND ACTUATOR

In each inner tank, a jettison valve is installed in a fuel line from the refuel gallery, and is attached to the bottom skin between rib 17 and rib 18.
The valve is of the ball type and controls the flow of fuel from the refuel gallery to the jettison pipe. It is driven by a dual electrical motor actuator powered by the 28 VDC BUS. The actuator has a visual indicator.

JETTISON PIPE AND OUTLET

The jettison pipe goes from the jettison valve, through the No. 4 flap track fairing, to a position behind the flap track fairing. The jettison pipe outlet is installed outboard of the engine, so that fuel is ejected clear of A/C fuselage and the tail plane. An anti-corona discharge assembly is installed at the outlet of the jettison pipe. This assembly is made from a material that has no metal in it. Thus all electrical discharge effects occur in the metal part of the pipe. But the fuel comes out safely downstream through the composite part of the pipe.

G7508471 - G3NT1T0 - FM28D900000003

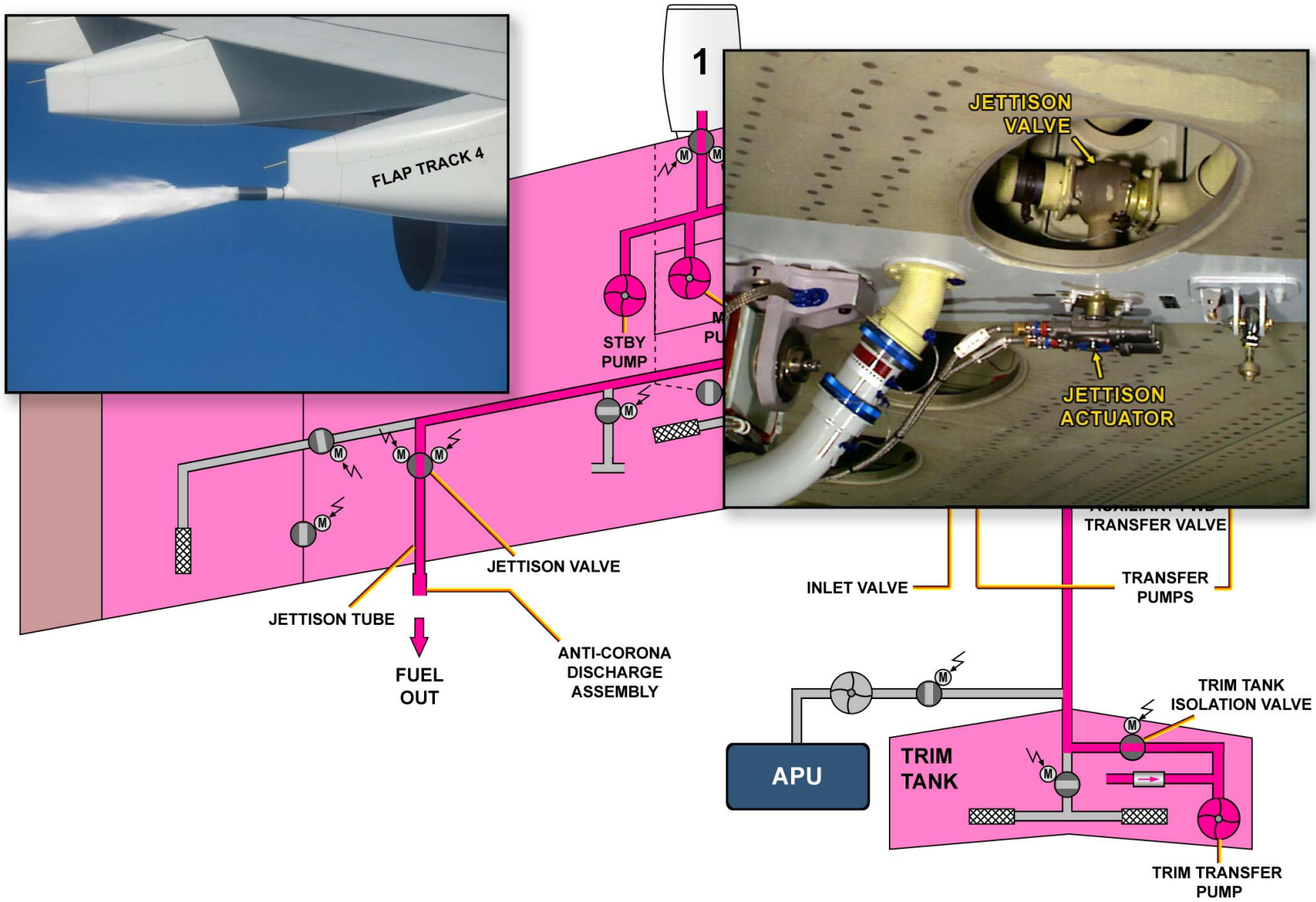

DESCRIPTION - JETTISON VALVE AND ACTUATOR & JETTISON PIPE AND OUTLET

G7508471 - G3NT1T0 - FM28D900000003

JETTISON D/O (A330-200)

OPERATION

Let's see the normal and abnormal operations of the jettison system in detail.

NORMAL OPERATION

On the FUEL control panel, when the two jettison P/Bs are set to ON:
- the white ON lights come on on the P/Bs,
- the FCMCs connect a 28 VDC supply to the actuators which operate, and the jettison valves open,
- if there is fuel in the center tank, the two transfer pumps supply the fuel from the center tank,
- the trim pipe isolation valve and all the fuel tank inlet valves (except for the trim tank) close,
- the two aft transfer valves open,
- all the main and stand-by pumps supply fuel from the inner tanks,
- the crossfeed valve opens,
- if there is fuel in the trim tank, a FWD transfer starts into the center tank. The fuel, from the inner, center and trim tanks then flows through the jettison valves and from the jettison pipe in the No 4 flap track fairing overboard.

The operation of the jettison system goes on until one of these conditions occurs:
- the crew manually stops the operation by releasing out either any of the JETTISON ARM or JETTISON ACTIVE P/B,
- the A/C gross weight decreases to a pre-set jettison final gross weight entered by the crew on the MCDU in the FUEL PREDiction page,
- the total fuel quantity in the inner tanks is less than 10000 kg (22000 lb),
- both inner tanks ETOPS warning sensors are dry.

G7508471 - G3NT1T0 - FM28D900000003

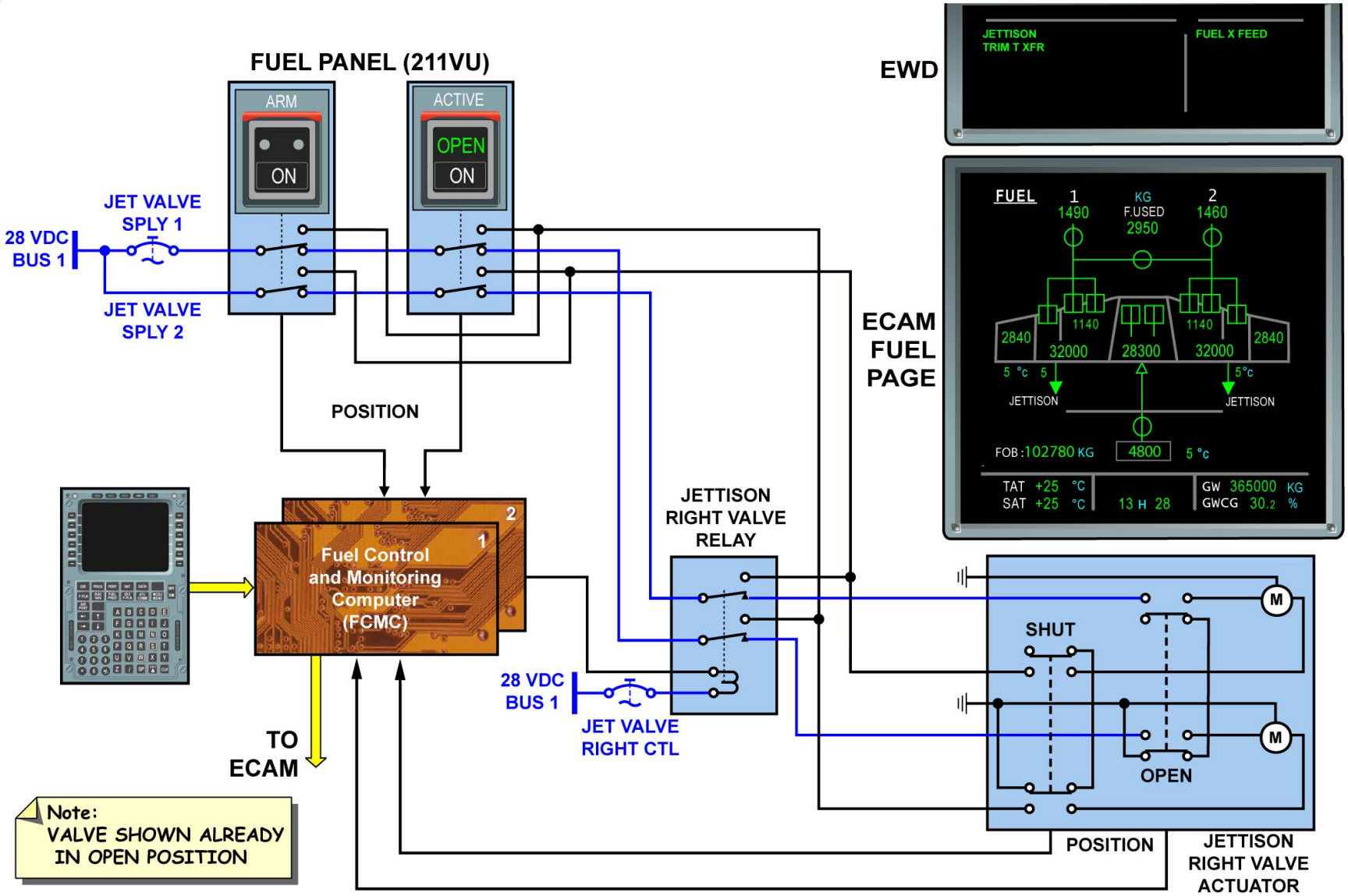

OPERATION - NORMAL OPERATION

G7508471 - G3NT1T0 - FM28D900000003

JETTISON D/O (A330-200)

OPERATION (continued)

ABNORMAL OPERATION

When jettison operation is selected and one of the jettison valves is not open, a JETTISON FAULT warning is triggered on the ECAM. When the system is not ON and one of the jettison valves is not closed, a JETTISON NOT CLOSED warning is triggered on the ECAM.

G7508471 - G3NT1T0 - FM28D900000003

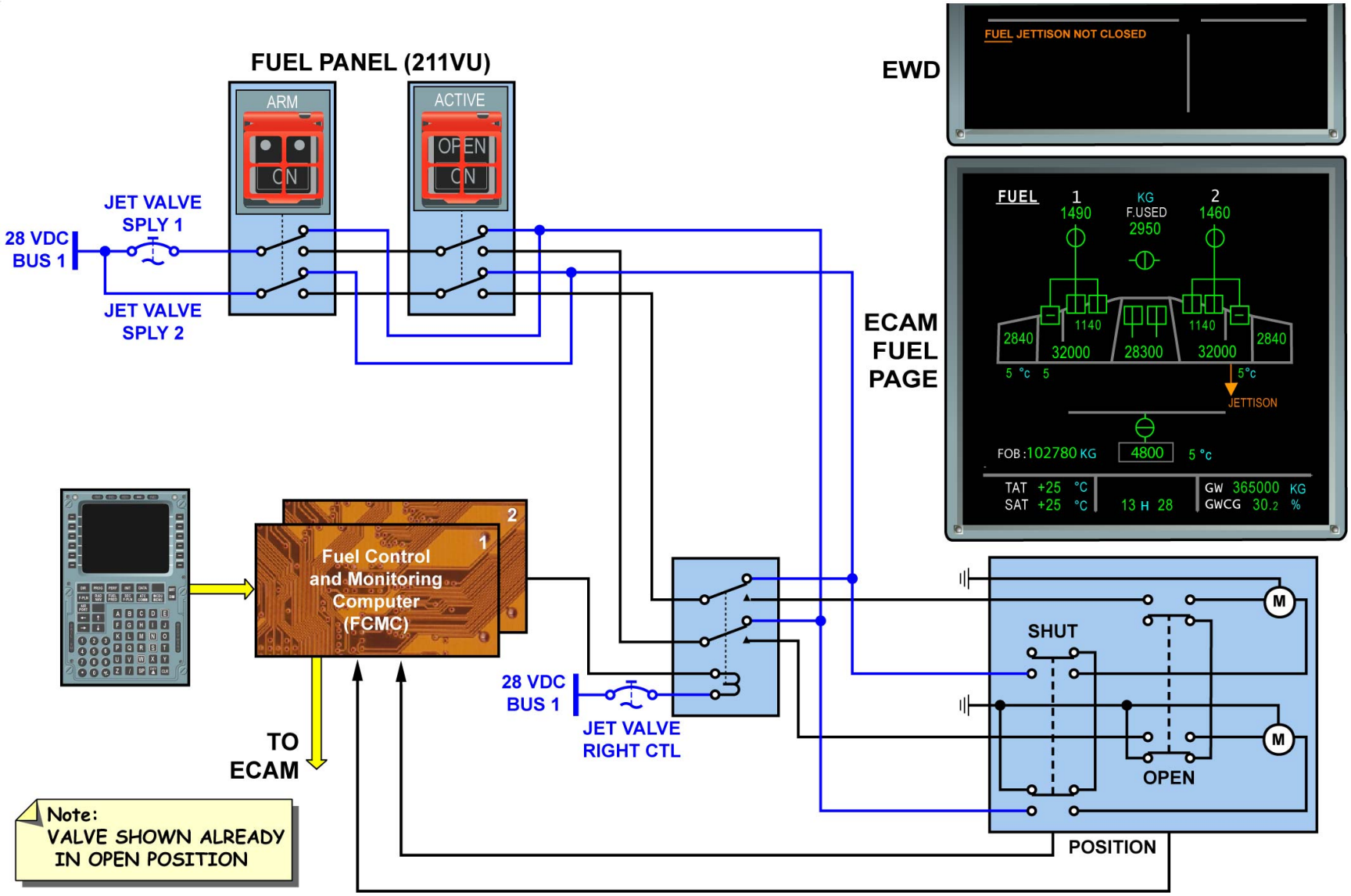

OPERATION - ABNORMAL OPERATION

G7508471 - G3NT1T0 - FM28D900000003

FUEL TANK SAFETY PROCEDURES (2)

General

Following three fuel tank explosions over the past 14 years which resulted in 346 fatalities, the U.S Department of Transportation's Federal Aviation Administration (FAA), have introduced new regulations to improve fuel tank safety.
These regulations relate to the prevention of ignition sources within fuel tanks of current type certificated aircraft. They require carrying out a one-time fuel system safety and design review.

Critical Design Configuration Control Limitations (CDCCL)

The FAA issued Special Federal Aviation Regulation (SFAR) 88 which gives a detailed description of the CDCCL concept.
The DGAC requested the SFAR 88 to be added to PART 145, PART M and PART 147 to reinforce the application of these regulations.
This includes:
- a conception part intended to aircraft design features,
- a maintenance part.

A CDCCL is a limitation requirement to preserve a critical ignition source prevention feature of the fuel system design that is necessary to prevent the occurrence of an unsafe condition.
The function of the CDCCL is to give instructions to retain the critical ignition source prevention feature during configuration change that may be caused by alterations, repairs or maintenance actions.
The aircraft manufacturers have to emit a document to their customers giving the list of all the maintenance tasks impacted by the CDCCL.
For AIRBUS this document is called the Fuel Airworthiness Limitations and it is added to the Airworthiness Limitation Section part 5.

G7508471 - G3NT1T0 - XM28D1000000001

CRITICAL DESIGN CONFIGURATION CONTROL LIMITATIONS (CDCCL)

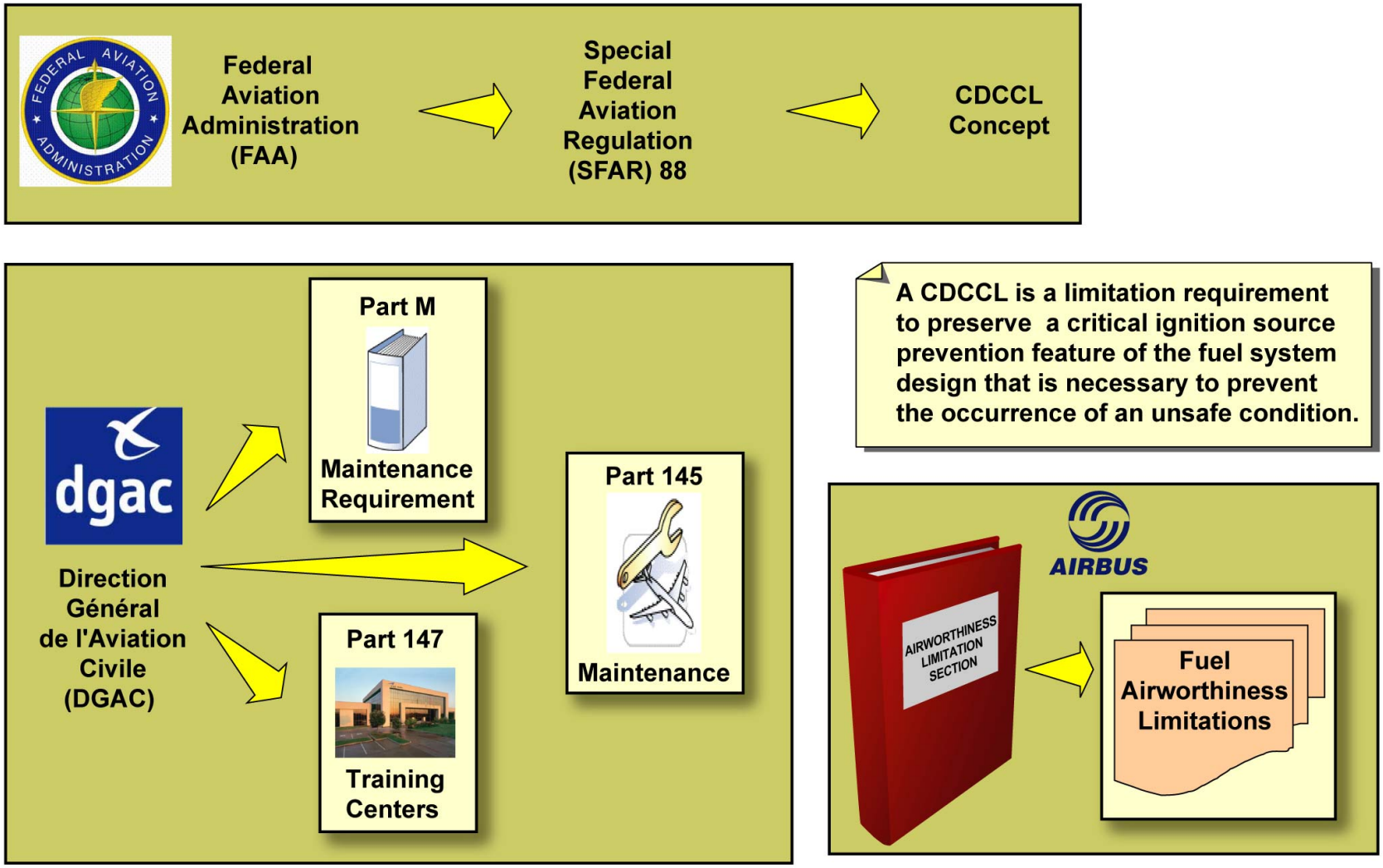

GENERAL - CRITICAL DESIGN CONFIGURATION CONTROL LIMITATIONS (CDCCL)

FUEL TANK SAFETY PROCEDURES (2)

General (continued)

Fuel Information and Combustion Triangle

A fuel tank can be viewed as a confined space where under specific conditions of pressure and temperature the ullage (vacant tank space) can be made of an evaporated fuel/air mixture known as fuel vapor.
The liquid fuel does not blow up on its own; explosive conditions are created when specific proportions of evaporated fuel, oxygen, pressure and temperature are present in the tank ullage; the fuel vapor is then defined as flammable. Even if the ullage is flammable, an explosion will not occur unless an ignition source of sufficient energy exists.
The combustion triangle:
An Explosion in a "Fuel" environment such as aircraft wing tanks can only occur if the 3 following sources are reached:
- fuel vapors,
- air (Oxygen O2),
- ignition (Electrical short cut, cigarette, etc.).

The aircraft fuel system has, by design, a number of features that are intended to protect the system from inadvertent ignition.
The potential sources of ignition considered are:
- spark generation inside a fuel tank by electrical current originated from external sources such as a lightning strike on the aircraft, by wiring or equipment electrical faults,
- spark/heat generation inside a fuel tank caused by friction of moving parts,
- fuel leakage outside of a fuel tank coming into contact with an ignition source.

A chart shows the fuel grades used.
The flash point is the lowest temperature at which the liquid supplies enough vapors mixed with ambient air, to make a gas that will ignite with the contact of a thermal source, also called flame.
At this temperature the combustion will not be self sufficient, because you need to reach the ignition point.
If the ignition does not need a flame, we talk about auto-ignition.
The Auto-Ignition point is the temperature at which a gas or a vapor ignites spontaneously in the absence of a thermal source.
Do not confuse this term with the ignition point (temperature at which the combustion is started and can continue).

G7508471 - G3NT1T0 - XM28D1000000001

COUNTRY	ORGANISATION	GRADE DESIGNATION
—	IATA	KEROSENE
US	ASTM DOD	JET A, JET A1 JP 8 JP 5
UK	MOD	AVTUR AVCAT TS - 1, RT
CHINA	PRC MPIS	No. 3 JET FUEL (RP 3)

JET A CARACTERISTICS	
Color	Colorless to yellow
Freeze temperature	< - 47ºC
Density	From 0,775 to 0,840
Flash point	Minimum 38ºC at sea level 7ºC at 12000 m
Self ignition temperature	>230ºC

Flash point :
The flash point is the lowest temperature at which the liquid supplies enough vapors mixed with ambient air, to make a gas that will ignite with the contact of a thermal source (flame).

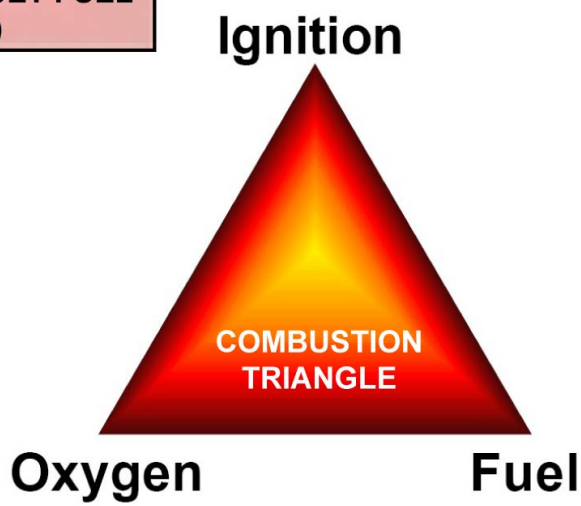

Auto-Ignition point :
the temperature at which a gas or a vapor ignites spontaneously in the absence of a thermal source.

GENERAL - FUEL INFORMATION AND COMBUSTION TRIANGLE

FUEL TANK SAFETY PROCEDURES (2)

Fuel System Design Configuration

The Airbus aircraft fuel systems have, by design, a number of features that are intended to protect the system from inadvertent ignition.
- Wing / Trim Tank Structure:
In all the fuel tanks, the material and the large number of fasteners on the attachment of the metallic structure used make sure that the fuel tank structures are electrically bonded.
Composite ribs are bonded by means of metallic strips attached to the non-metallic structure.
All aluminum structural items in the wing, trim and centre boxes have a finishing for protection against electrical harnesses short-circuit with the structure.
The combination of the construction and thickness of the tank boundary skins give protection against a lightning strike causing ignition (heat).
- Fuel Quantity Indicating (FQI) Equipment:
Probes and sensors installed in tanks have low power supply. Electrical connection is done through a terminal block. The protective gap between the probes and the tank structure is maintained. They are electrically isolated from the structure.
- Fuel pump:
Fuel pumps have safety features to prevent pumps from working in an empty fuel tank. The pumps are tested to show that even after a long working condition in an "empty fuel tank" the rotating surfaces remain lubricated and thus limit the risk of mechanical ignition.
Each of the pumps is contained within an explosion-proof canister. It comprises a pump element contained within and electrically bonded to the canister and driven by an electric motor. Electrical connections to all pumps are made outside the tank.
The moving parts inside the pump are normally submerged in fuel so they cannot generate a spark during faulty conditions.
- Lightning Protection:
All equipment installed within any fuel tank is bonded to the structure
- Fuel System Wiring:
Only when absolutely necessary, wiring is routed inside fuel tanks. This wiring is limited to sensing and monitoring systems, with very low energy carrying requirements, to protect against the occurrence of an ignition source as a result of high energy entering the fuel tank via the wiring.
External electrical wiring support clamps make sure, that a cut cable cannot come into contact with the fuel tank boundary or structure in a fuel vapor area.
There is a complete segregation between in-tank wiring equipment and fuel calculators from other aircraft system wirings.
- Valves:
All motor operated valves within the fuel tanks have the actuator located outside the tank wall. The valve mechanisms inside the tank are dual bonded and do not have an ignition hazard.
- Pressure Switches:
Pump pressure switches are mounted on the tank boundaries. They are separated from the fuel by a diaphragm. The electrical connections are fully sealed and explosion proof.
- Fuel Leaks:
It is possible for fuel or fuel vapor to leak from a fuel tank into an adjacent area and the accumulated fuel can become hazardous causing ignition.
Fuel leaks from the wing and trim tanks go either to the leading or trailing edge cavities or to the outside. Any fuel overflowing from the NACA intake is directed downwards and away from the engines (heat source) via a fuel leak drip strip (angle section) located inboard of the NACA intake. In the leading and trailing edges the equipment is explosion proofed and insulated from the leakage. The APU fuel feed and Trim Tank transfer pipes at the rear fuselage are shrouded so any fuel leakage is drained overboard via the drain mast.
- Heat Sources:
Wing leading edges contain hot air ducting from the engines to the bleed air and anti icing systems. These pipes are insulated and separated from the tank boundary.

Electrical harnesses in the tanks use very low voltage current (less than 5 VDC) and are far enough for the surrounding equipment and structure (segregated routing).

Fuel pumps are the only electrical equipment using high power current (115 VAC). Consequently, pumps harnesses are located under the lower wing skin panels outside the fuel tanks.

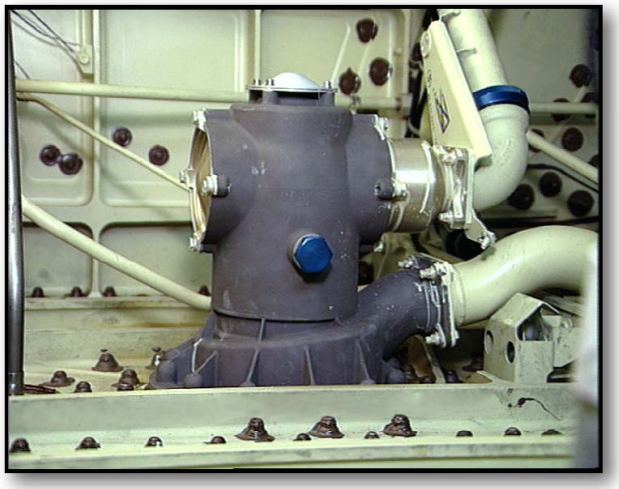

Fuel pumps are installed in a self-contained explosive canister.

FUEL SYSTEM DESIGN CONFIGURATION

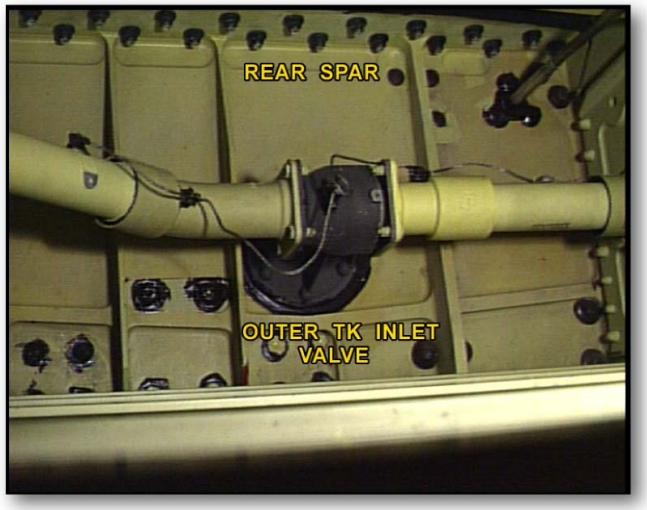

Bonded valve inside the tank

Insulated hot air duct and Valve actuator located ouside of the tank

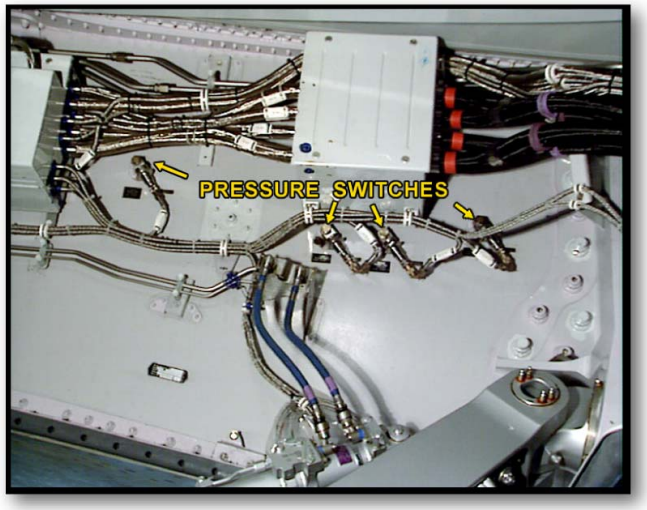

Pressure Switches and FQI terminal block

Wing fence and Naca air intake

FUEL SYSTEM DESIGN CONFIGURATION

G7508471 - G3NT1T0 - XM28D1000000001

This Page Intentionally Left Blank

G7508471 - G3NT1T0 - XM28D1000000001

FUEL TANK SAFETY PROCEDURES (2)

Maintenance Application of CDCCL

CDCCL items are listed in Airworthiness Limitation Form.
CDCCL section 2 of Airworthiness Limitation Form.

G7508471 - G3NT1T0 - XM28D1000000001

AIRBUS

Customer Services Directorate

A330 Fuel Airworthiness Limitations

SECTION 0 - INTRODUCTION

1. SCOPE

This document contains the Fuel Airworthiness Limitations that arise from compliance with JAA's Interim Policy on Fuel Tank Safety (INT/POL/25/12) and FAA's Special Federal Aviation Regulation (SFAR) 88. They have been derived in accordance with JAA's draft Temporary Guidance Leaflet (TGL) 47 and FAA's Advisory Circular (AC) 25.981-1B. The nomenclature and means of promulgation follow the FAA's memorandum ref PS-ANM100-2004-10029 'Policy Statement on Process for Developing SFAR 88-related Instructions for Maintenance and Inspection of Fuel Tank Systems'. This latter document has been jointly developed between FAA and JAA to ensure a unified approach.

These requirements, together with the Life Limits / Monitored Parts, structural Airworthiness Limitation Items (ALI) and systems Certification Maintenance Requirements (CMR) comprise the Airworthiness Limitation Section which satisfies the requirements of JAR 25.1529 Appendix H paragraph 25.4.

IMPORTANT: At first delivery of an aircraft configuration into an operator's fleet, the requirements given in this document are mandatory, except in so far that interval escalations can be justified in accordance with the procedure stated herein. If a more restrictive Fuel ALI is issued on an aircraft configuration already in service, the requirement for existing operators to follow the revised FAL document will normally be mandated by Airworthiness Directive (Consigne de Navigabilité).

Non-compliance suspends the validity of the Airworthiness Certificate.

The identification of Fuel Airworthiness Limitations in no way diminishes the importance of other tasks and practices associated with the fuel system. Changes to these are subject to normal practices and procedures between the operator and his national authorities.

This document does not take into account Airworthiness Directives (Consigne de Navigabilité) which, if issued against an existing Fuel Airworthiness Limitation, supersede the specific requirement given in this document

MAINTENANCE APPLICATION OF CDCCL

G7508471 - G3NT1T0 - XM28D1000000001

AIRBUS

Customer Services Directorate

A330 Fuel Airworthiness Limitations

SECTION 2

CRITICAL DESIGN CONFIGURATION CONTROL LIMITATIONS

	CDCCL	Requirement	Reference	Applicability
1	Air gap between a fuel quantity indicating probes and the aircraft structure.	Critical to prevent spark generation during lightning strike conditions and must not be compromised The gap stated in the relevant maintenance procedure in the AMM must be achieved during installation of a fuel quantity probe.	AMM 28-42-15-400 28-42-16-400 28-42-17-400 28-42-19-400 28-42-21-400	 ALL A330-200 ALL A330-200 ALL
2	Separation of fuel quantity and level indicating system wiring from other wiring.	To prevent cross coupling of high voltage transients and thereby keep unsafe ignition energies from inside the tank it is required that operators obey the wire routing and separation standards given in the Electrical Standard Practices Manual (ESPM).	ESPM 20-10-00 20-33-20 20-33-21 20-33-22	 ALL ALL ALL
3	Direct bonding on items of equipment inside a fuel tank.	Direct bonding is critical to prevent spark generation during component failure and lightning strike conditions and must not be compromised Direct bonding in fuel tanks must be carried out during component installation to the appropriate bonding method and standard stated within the installation procedure in the AMM.	AMM 28-11-41-400 28-11-44-400 28-11-45-400 28-11-48-400 28-12-41-400 28-17-51-400 28-21-51-400 28-21-52-400 28-23-43-400 28-26-42-400 28-26-51-400 28-31-41-400 28-42-18-400 57-27-11-400	 ALL A330-200 ALL ALL ALL ALL ALL ALL ALL A330-200 A330-200 Post 45008 ALL
4	Safety critical features of fuel pumps	These features must be maintained throughout the full life of the fuel pump to avoid the possibility of generation of an ignition source by overheating or sparks caused by arcing, friction etc. Repair and overhaul of fuel pumps must be carried out in accordance with the equipment manufacturer's maintenance instructions or other maintenance instructions acceptable to the certifying authority.	CMM 28-20-40 28-21-50	 ALL

AIRN@AV
AMM ESPM

MPD
SB
AD

CMM

MAINTENANCE APPLICATION OF CDCCL

G7508471 - G3NT1T0 - XM28D1000000001

This Page Intentionally Left Blank

G7508471 - G3NT1T0 - XM28D1000000001

FUEL TANK SAFETY PROCEDURES (2)

Maintenance Application of CDCCL (continued)

AMM Application

A WARNING in the procedures identifies CDCCL items. When a procedure identifies a CDCCL item, it is mandatory and necessary that you follow the instructions correctly and accurately.
Air gap between fuel quantity indicating probes and the aircraft structure.

WARNING: THIS PROCEDURE USES A FUEL SYSTEM ITEM THAT IS IN A CATEGORY KNOWN AS A CRITICAL DESIGN CONFIGURATION CONTROL LIMITATION (CDCCL). CDCCL IDENTIFIES AN ITEM THAT CAN BE THE SOURCE OF A POSSIBLE FUEL TANK IGNITION. YOU MUST KEEP ALL CDCCL ITEMS IN THE APPROVED CONFIGURATION. DAMAGE, WEAR OR CHANGES TO A CDCCL ITEM CAN CAUSE A POSSIBLE FUEL TANK EXPLOSION.

WARNING: THIS INSTRUCTION IS APPLICABLE TO A CRITICAL DESIGN CONFIGURATION CONTROL LIMITATION (CDCCL). CAREFULLY OBEY ALL GIVEN INSTRUCTIONS WHEN YOU DO THIS STEP. IF YOU DO NOT OBEY THESE INSTRUCTIONS, A DANGEROUS CONDITION CAN OCCUR THAT CAN CAUSE A POSSIBLE FUEL TANK EXPLOSION.

G7508471 - G3NT1T0 - XM28D1000000001

AIBF A340 - Selected effectivity: ALL - Document AMM - ADOC N@vigator V 2.4b - Microsoft Internet Explorer provided by AIRBUS

User ID: ARROYAS
Database: AIBF - A340
Rev. date: October 1, 2007
Effectivity: ALL

System Baskets Search Attachments AMM TSM IPC ASM AWM AWL ESPM Help

Home page | AMM

AirN@v / Maintenance

Table of contents

AIRCRAFT MAINTENANCE MANUAL
28 - FUEL ** ON A/C ALL
28-00 - FUEL - GENERAL
28-10 - STORAGE
28-11 - TANKS
28-12 - TANK VENTING SYSTEM
28-14 - TRIM PIPE SHROUD DRAINAGE
28-16 - FUEL RECIRCULATION FOR C
28-17 - WATER SCAVENGE
28-18 - IGNITION PREVENTION
28-20 - DISTRIBUTION
28-21 - MAIN FUEL PUMP SYSTEM
28-22 - APU FUEL PUMP SYSTEM
28-23 - CROSSFEED SYSTEM
28-24 - ENGINE LP FUEL SHUT OFF
28-25 - REFUEL/DEFUEL SYSTEM
28-26 - MAIN TRANSFER SYSTEM
28-27 - TRIM TANK TRANSFER SYSTE
28-29 - APU LP FUEL SHUT OFF
28-31 - JETTISON SYSTEM
28-40 - INDICATING
28-42 - QUANTITY INDICATING
28-43 - MANUAL MAGNETIC INDICATC
28-46 - TANK LEVEL SENSING
28-49 - FUEL TEMPERATURE MEASUF
28-51 - FUEL CONTROL AND MONITO

28 - FUEL

** ON A/C ALL

28 - FUEL

28-00 - FUEL - GENERAL

28-00-00 - FUEL - GENERAL

28-00-00 PB 001 - FUEL - GENERAL - DESCRIPTION AND OPERATION

1. General

A. Critical Design Configuration Control Limitations (CDCCL)

Some procedures identify a fuel system item that is in a category known as a Critical Design Configuration Control Limitation (CDCCL). This category is applicable to items that are identified as the possible source of ignition of fuel in a fuel tank.
You must keep CDCCL items in a serviceable condition. It is possible that damage, wear or changes to a CDCCL item can cause a fuel tank explosion.
CDCCL items are identified by a WARNING in the procedures where they occur. When a procedure identifies a CDCCL item, it is a mandatory requirement that you do the instruction correctly and accurately as the procedure tells you.

B. Description

The fuel system:
- keeps fuel in the main fuel tanks and trim tank, which are open to atmosphere through vent surge tanks
- controls and supplies fuel in the correct quantities to the fuel tanks during refuel operations
- supplies fuel to the engines
- supplies fuel to the Auxiliary Power Unit (APU)
- moves fuel to and from the trim tank (during flight) to control the Center of Gravity (CG) of the aircraft
- supplies fuel to cool the Integrated Drive Generators (IDG)
- contains sufficient fuel to let the aircraft operate at an Extended Range (ER). Thus the aircraft does not have a diversion time limit
- makes it possible to discard some of the aircraft fuel in flight
- keeps fuel in the outer wing to give wing bending and flutter relief
- gives indications in the cockpit of the usual system operation
- gives indications in the cockpit of failures that could cause an unusual condition.

2. Component Location

(Ref. Fig. 001 SHEET 001.1)
(Ref. Fig. 002 SHEET 002.1)
(Ref. Fig. 003 SHEET 003.1)

MAINTENANCE APPLICATION OF CDCCL - AMM APPLICATION

G7508471 - G3NT1T0 - XM28D1000000001

AFR A330 - Selected effectivity: ALL - Document AMM - ADOC N@vigator V 2.4b - Microsoft Internet Explorer provided by AIRBUS

User ID: ARROYAS
Database: AFR - A330
Rev. date: October 1, 2007
Effectivity: ALL

System Baskets Search Attachments AMM TSM IPC ASM AWM AWL ESPM Help

Home page AMM

AirN@v / Maintenance

Table of contents

28-42-15-400-801 - Installation of the Wing-Tank Fuel Probe (8QT1,8QT2,9QT1,9QT2,10QT1,10QT2, 11QT1,11QT2,12QT1,12QT2,13QT1,13QT2,14

Ref. Sheets See IPC

28-13 - CENTER BOX VENTING
28-14 - TRIM PIPE SHROUD DRA
28-17 - WATER SCAVENGE
28-18 - IGNITION PREVENTION
28-20 - DISTRIBUTION
28-21 - MAIN FUEL PUMP SYST
28-22 - APU FUEL PUMP SYSTE
28-23 - CROSSFEED SYSTEM
28-24 - ENGINE LP FUEL SHUT
28-25 - REFUEL/DEFUEL SYSTE
28-26 - MAIN TRANSFER SYST
28-27 - TRIM TANK TRANSFER
28-29 - APU LP FUEL SHUT OFF
28-40 - INDICATING
28-42 - QUANTITY INDICATING
28-42-00 - QUANTITY INDICA
28-42-15 - PROBE - FQI, WING
28-42-15 PB 401 - PROBE -
28-42-15-000-801 - Remo
28-42-15-400-801 - Insta
Figure 28-42-15-991-002
Figure 28-42-15-991-001
28-42-16 - PROBE - FQI, CEN
28-42-17 - PROBE - FQI, THS
28-42-18 - DENSITOMETER - I
28-42-19 - PROBE - FQI COMI
28-42-21 - PROBE - FQI COMI
28-42-22 - INDICATOR - FUEL
28-42-43 - HARNESS - WING
28-42-44 - HARNESS - CENTI
28-42-45 - HARNESS - THS
28-43 - MANUAL MAGNETIC INI
28-46 - TANK LEVEL SENSING

28-42-15-400-801 - Installation of the Wing-Tank Fuel Probe (8QT1,8QT2,9QT1,9QT2,10QT1,10QT2, 11QT1,11QT2,12QT1,12QT2,13QT1,13QT2,14QT1,14QT2,15QT1,15QT2,16QT1,16QT2...) ...

** ON A/C ALL

TASK 28-42-15-400-801
Installation of the Wing-Tank Fuel Probe (8QT1,8QT2,9QT1,9QT2,10QT1,10QT2,

WARNING: THIS PROCEDURE USES A FUEL SYSTEM ITEM THAT IS IN A CATEGORY KNOWN AS A CRITICAL DESIGN CONFIGURATION CONTROL LIMITATION (CDCCL) CDCCL IDENTIFIES AN ITEM THAT CAN BE THE SOURCE OF A POSSIBLE FUEL TANK IGNITION. YOU MUST KEEP ALL CDCCL ITEMS IN THE APPROVED CONFIGURATION. DAMAGE, WEAR OR CHANGES TO A CDCCL ITEM CAN CAUSE A POSSIBLE FUEL TANK EXPLOSION.

WARNING: MAKE SURE THAT THE SAFETY DEVICES AND THE WARNING NOTICES ARE IN POSITION BEFORE YOU START A TASK ON OR NEAR:
- THE FLIGHT CONTROLS
- THE FLIGHT CONTROL SURFACES
- THE LANDING GEAR AND THE RELATED DOORS
- COMPONENTS THAT MOVE.

MOVEMENT OF COMPONENTS CAN KILL OR INJURE PERSONS.

WARNING: MAKE SURE THAT THE GROUND SAFETY-LOCKS ARE CORRECTLY INSTALLED ON THE LANDING GEAR. THIS PREVENTS UNWANTED MOVEMENT OF THE LANDING GEAR.

1. Reason for the Job
   Self Explanatory
2. Job Set-up Information
3. Job Set-up

Subtask 28-42-15-941-051

WARNING: OBEY THE SAFETY PROCEDURES WHEN YOU DO WORK IN A FUEL TANK. THIS WILL PREVENT INJURY OR DAMAGE.

A. Safety Precautions
(1) Obey the safety procedures when you do work in a fuel tank (Ref. AMM TASK 28-10-00-910-801).

Subtask 28-42-15-010-052

B. Get Access
(1) Make sure that the adjustable platform is in position below the applicable access panel
(2) Make sure that the applicable access panel is removed.

Explorer provided by AIRBUS

AWM AWL ESPM Help

AirN@v / Maintenance

el Probe (8QT1,8QT2,9QT1,9QT2,10QT1,10QT2, 11QT1,11QT2,12QT1,12QT2,13QT1,13QT2,14

DESIGNATION	FIN	LOCATION
	3QM1	
	3QM2	
	2QM2	K34
	2QM1	M78
	1QM2	M77
	1QM1	M76

trical connectors of the cable (9).
GENTS (Material No. 11-004) to clean the component interface.
he removed component are clean and in the correct condition.

01.1)
02.1)

28-42-15-000-801 - Remo
28-42-15-400-801 - Insta
Figure 28-42-15-991-002
Figure 28-42-15-991-001
28-42-16 - PROBE - FQI, CEN
28-42-17 - PROBE - FQI, THS
28-42-18 - DENSITOMETER - I
28-42-19 - PROBE - FQI COMI
28-42-21 - PROBE - FQI COMI
28-42-22 - INDICATOR - FUEL
28-42-43 - HARNESS - WING
28-42-44 - HARNESS - CENTI
28-42-45 - HARNESS - THS
28-43 - MANUAL MAGNETIC INI
28-46 - TANK LEVEL SENSING

A. Installation of the Probe

WARNING: THIS INSTRUCTION IS APPLICABLE TO A CRITICAL DESIGN CONFIGURATION CONTROL LIMITATION (CDCCL). CAREFULLY OBEY ALL GIVEN INSTRUCTIONS WHEN YOU DO THIS STEP. IF YOU DO NOT OBEY THESE INSTRUCTIONS, A DANGEROUS CONDITION CAN OCCUR THAT CAN CAUSE A POSSIBLE FUEL TANK EXPLOSION.

(1) Put the probe (10) in the correct position and install the bolts (1).
(a) Measure the clearance between the structure and the top and the bottom of the probe (10). Make sure that there is a minimum of 10 mm (0.3937 in.) clearance at the top and the bottom probe position.
(b) To prevent the possibility of a static discharge, also make sure that the fuel probe is not less than 7 mm (0.2755 in.) from:
- the nearest structure - rib and tank wall
- pipework, brackets, p-clips and fasteners
- other metal parts.

(2) Identify and connect the electrical connectors of the cable (9) with the screws (4), (5) and (6).
(3) TORQUE the screws (4), (5) and (6):
- the screw (4)
  to 0.11 m.daN (9.73 lbf.in)
- the screw (5)

MAINTENANCE APPLICATION OF CDCCL - AMM APPLICATION

G7508471 - G3NT1T0 - XM28D100000001

This Page Intentionally Left Blank

G7508471 - G3NT1T0 - XM28D1000000001

FUEL TANK SAFETY PROCEDURES (2)

Maintenance Application of CDCCL (continued)

ESPM Application

Separation of fuel quantity and level indicating system wiring from other wiring.

G7508471 - G3NT1T0 - XM28D1000000001

AFR A330 - Selected effectivity: ALL - Document ESPM - ADOC N@vigator V 2.4b - Microsoft Internet Explorer provided by AIRBUS

User ID: ARROYAS
Database: AFR - A330
Rev. date: October 1, 2007
Effectivity: ALL

System Baskets Search Attachments AMM TSM IPC ASM AWM AWL ESPM Help

Home page AMM ESPM

AirN@v / Maintenance

Table of contents

Electrical Standard Practices Manual
20 - STANDARD PRACTICES-AIRFRAME
20-10 - SAFETY PRACTICES (Airbus)
20-10-00 - SAFETY PRACTICES (Airbu

20-10 - SAFETY PRACTICES (Airbus)

Highlight Ref. Sheets

SAFETY PRACTICES (Airbus)

SAFETY PRACTICES - DESCRIPTION AND OPERATION

1. General

For work on the electrical system is necessary:
- to know and obey the standard safety practices,
- to have a good knowledge of the electrical standard practices,
- to have a good knowledge of requirements (processes, WARNINGS, CAUTIONS etc..) before you start the work.

This is necessary to prevent injury to persons and/or damage to equipment.
This document gives general safety practices for work on the aircraft electrical systems and parts of these systems such as: wires, wire routing, conduits, connections, splices, etc...
These safety practices do not replace local regulations specified by local authorities.

WARNING: THE CORRECT SEPARATION BETWEEN SENSITIVE WIRING AND WIRING OF OTHER SYSTEMS IS NECESSARY TO PRESERVE THE CRITICAL IGNITION SOURCE PREVENTION FEATURES OF THE SYSTEM DESIGN AND IS THEREFORE CLASSIFIED AS A CRITICAL DESIGN CONFIGURATION CONTROL LIMITATION (CDCCL). A CDCCL MUST BE KEPT IN THE APPROVED CONFIGURATION TO ENSURE UNSAFE CONDITIONS DO NOT DEVELOP AS A RESULT OF MODIFICATION, MAINTENANCE OR REPAIR.

CAUTION: ALWAYS OBEY THE PRECAUTIONS THAT FOLLOW TO KEEP ELECTRICAL WIRING IN A SATISFACTORY CONDITION (ELECTRICALLY AND MECHANICALLY SERVICEABLE).
WHEN YOU DO MAINTENANCE WORK, REPAIRS OR MODIFICATIONS, ALWAYS KEEP ELECTRICAL WIRING, COMPONENTS AND THE WORK AREA AS CLEAN AS POSSIBLE. TO DO THIS:
- PUT PROTECTION, SUCH AS PLASTIC SHEETING, CLOTHS, ETC. AS NECESSARY ON WIRING AND COMPONENTS
- REGULARLY REMOVE ALL SHAVINGS, UNWANTED MATERIAL AND OTHER CONTAMINATION.

THESE PRECAUTIONS WILL DECREASE THE RISK OF CONTAMINATION AND DAMAGE TO THE ELECTRICAL WIRING INSTALLATION.
IF THERE IS CONTAMINATION, REFER TO ESPM CHAPTER 20-55-00, CLEANING.

2. Maintenance

WARNING: MAKE SURE THAT NO AC OR DC POWER SOURCE IS CONNECTED TO THE AIRCRAFT ELECTRICAL CIRCUITS. THERE IS A RISK OF ELECTROCUTION IF THE AC OR DC POWER STAYS CONNECTED.

WARNING: DO NOT LOOK INTO THE END OF A FIBER-OPTIC CABLE. THERE IS A RISK OF LASER RADIATION, WHICH YOU WILL NOT SEE. LASER RADIATION IS DANGEROUS FOR YOUR EYES.

MAINTENANCE APPLICATION OF CDCCL - ESPM APPLICATION

G7508471 - G3NT1T0 - XM28D100000001

FUEL TANK SAFETY PROCEDURES (2)

Maintenance Application of CDCCL (continued)

AMM Application

Direct bonding on items of an equipment inside a fuel tank.

G7508471 - G3NT1T0 - XM28D1000000001

AFR A330 - Selected effectivity: ALL - Document AMM - ADOC N@vigator V 2.4b - Microsoft Internet Explorer provided by AIRBUS

User ID: ARROYAS
Database: AFR - A330
Rev. date: October 1, 2007
Effectivity: ALL

System Baskets Search Attachments AMM TSM IPC ASM AWM AWL ESPM Help

Home page AMM ESPM

AirN@v / Maintenance

Table of contents

AIRCRAFT MAINTENANCE MANUAL
28 - FUEL ** ON A/C ALL
28-11 - TANKS
28-11-41 - VALVE - WATER, DRAIN, WI
28-11-41 PB 401 - VALVE - WATER, D

28-11-41 PB 401 - VALVE - WATER, DRAIN, WING TANK (5100QS1, 5100QS2, 5101QS1, 5101QS2, 5102QS1, 5102QS2, ...

Ref. Sheets See IPC

(5) Remove the remaining nuts (9) and the bolts (6).

(6) Remove the water drain valve (8).

(7) Remove and discard the O-rings (5) and (7).

(8) If you are to replace the water drain valve (8), do these steps:

(a) Remove the union (2) from the water drain valve (8).

(b) Remove and discard the O-ring (1).

(9) Put blanking plugs on the disconnected line ends.

** ON A/C ALL

TASK 28-11-41-400-803
Installation of the Water Drain Valve (5100QS1,5100QS2,5101QS1,5101QS2,5102QS1, 5102QS2,5104QS1,5104QS2,5104QS3,5104QS4,5107QS1,5107QS2)

WARNING: THIS PROCEDURE USES A FUEL SYSTEM ITEM THAT IS IN A CATEGORY KNOWN AS A CRITICAL DESIGN CONFIGURATION CONTROL LIMITATION (CDCCL) CDCCL IDENTIFIES AN ITEM THAT CAN BE THE SOURCE OF A POSSIBLE FUEL TANK IGNITION. YOU MUST KEEP ALL CDCCL ITEMS IN THE APPROVED CONFIGURATION. DAMAGE, WEAR OR CHANGES TO A CDCCL ITEM CAN CAUSE A POSSIBLE FUEL TANK EXPLOSION.

WARNING: MAKE SURE THAT THE SAFETY DEVICES AND THE WARNING NOTICES ARE IN POSITION BEFORE YOU START A TASK ON OR NEAR:
- THE FLIGHT CONTROLS
- THE FLIGHT CONTROL SURFACES
- THE LANDING GEAR AND THE RELATED DOORS
- COMPONENTS THAT MOVE.

MOVEMENT OF COMPONENTS CAN KILL OR INJURE PERSONS.

1. Reason for the Job
   Self Explanatory
2. Job Set-up Information
3. Job Set-up
   Subtask 28-11-41-941-055

   WARNING: OBEY THE SAFETY PROCEDURES WHEN YOU DO WORK IN A FUEL TANK. THIS WILL PREVENT INJURY OR DAMAGE.

MAINTENANCE APPLICATION OF CDCCL - AMM APPLICATION

G7508471 - G3NT1T0 - XM28D100000001

FUEL TANK SAFETY PROCEDURES (2)

Maintenance Application of CDCCL (continued)

CMM Application

Safety critical features of fuel pumps: these features must be maintained throughout the full life of the fuel pump to avoid a possible ignition source by overheating or sparks caused by arcing, or friction etc...

G7508471 - G3NT1T0 - XM28D1000000001

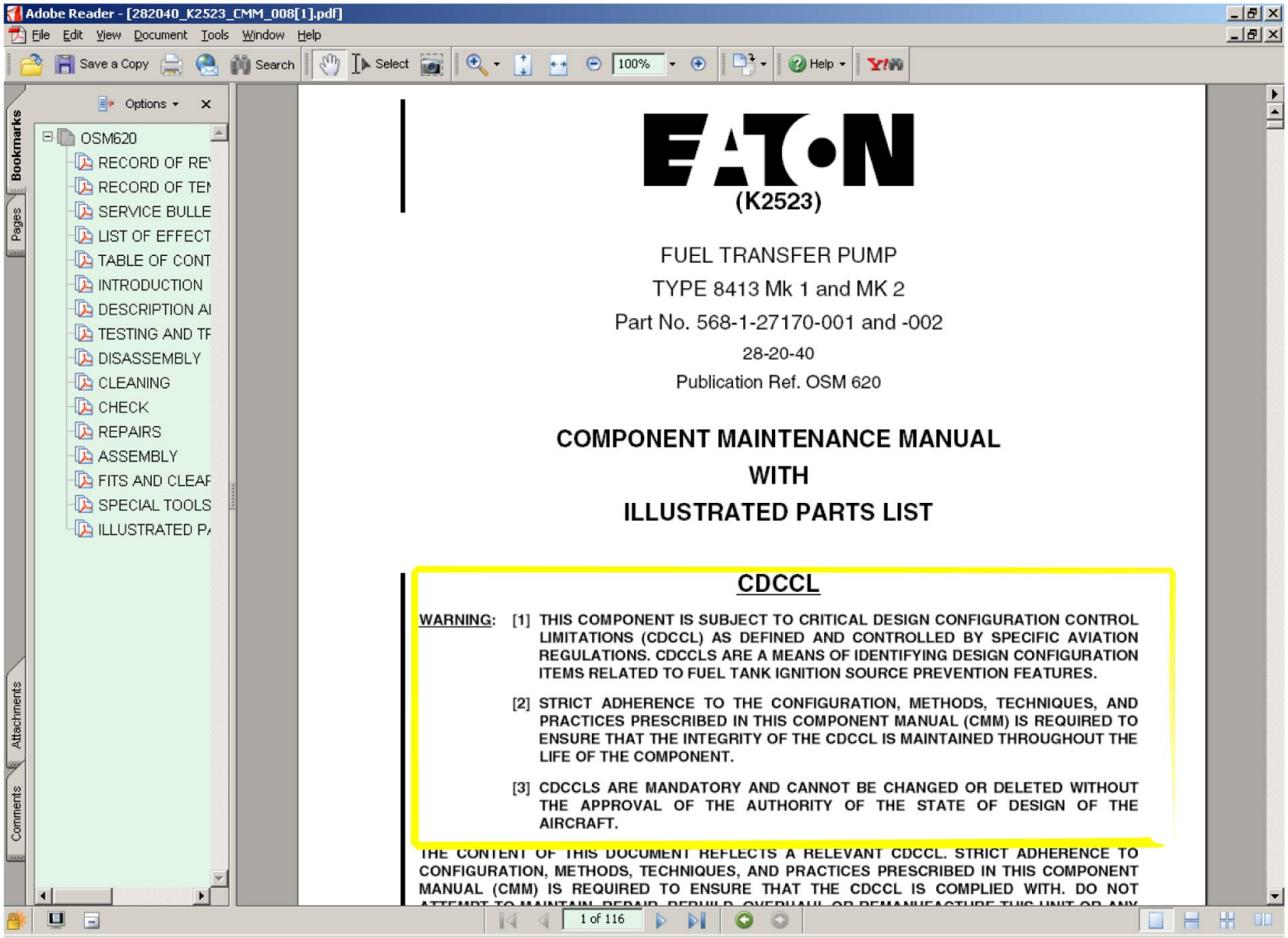

MAINTENANCE APPLICATION OF CDCCL - CMM APPLICATION

G7508471 - G3NT1T0 - XM28D100000001

FUEL TANK SAFETY PROCEDURES (2)

Maintenance Application of CDCCL (continued)

MPD Application

Application in Maintenance Planning Document.

G7508471 - G3NT1T0 - XM28D1000000001

A380

MAINTENANCE PLANNING DOCUMENT

TASK NUMBER	ZONE	DESCRIPTION	THRESHOLD INTERVAL	SOURCE	REFERENCE	MEN	M/H	APPLICABILITY
281400-00003-01	198	PIPE SHROUD DRAINAGE AF OPC CHECK DRAIN MAST/LEAK MONITOR FOR BLOCKAGE/OPERATION.	I: 12 MO	MRB 9	281400-210-801 MRB REFERENCE 281400-00003-01M	1	0.10	A380-800
281400-00004-01	140 310	PIPE SHROUD DRAINAGE AF FNC PRESSURE CHECK TRIM TRANSFER PIPE SHROUD FOR INTEGRITY. ACCESS: 143AZ 197BB 198BB 311AB	I: 48 MO	MRB 8	281400-780-803 MRB REFERENCE 281400-00004-01M	1 1 * *	0.60 0.60 0.91 0.02	A380-800
281400-00005-01	140 310	PIPE SHROUD DRAINAGE AF FNC PRESSURE CHECK APU FUEL FEED PIPE SHROUD FOR INTEGRITY. ACCESS: 143AZ 197BB 198BB 313AB	I: 48 MO	MRB 8	281400-780-804 MRB REFERENCE 281400-00005-01M	1 1 * *	0.60 0.60 0.91 0.02	A380-800
281400-00006-01	198	PIPE SHROUD DRAINAGE AF OPC CHECK LEAK MONITOR FOR CORRECT OPERATION.	I: 7 DY	MRB 9	281400-710-802 MRB REFERENCE 281400-00006-01M	1	0.05	A380-800
281800-00001-01	140 300 500 600	IGNITION PREVENTION AF DET DETAILED INSPECTION OF WING AND TRIM TANK BONDING LEADS. ACCESS: 311AB	I: 144 MO	MRB 9	281800-220-801 MRB REFERENCE 281800-00001-01M	1 1 1 1 *	2.20 2.20 2.20 2.20 0.02	A380-800
281800-00002-01	500 600	IGNITION PREVENTION AF GVI GENERAL VISUAL INSPECTION OF COMPOSITE RIB BONDING STRAPS. ACCESS: 541AB 542DB 542EB 543AB 543BB 543CB 543DB 543EB 544AB 544BB 544CB 544DB * * * * * C O N T I N U E D * * * * *	I: 144 MO	MRB 9	281800-210-803 MRB REFERENCE 281800-00002-01M	1 1 *	0.90 0.90 3.54	A380-800

SYSTEMS AND POWER PLANT PROGRAM : FUEL ISSUE: JUN 01/07 SECTION: 2-28 PAGE 3

MAINTENANCE APPLICATION OF CDCCL - MPD APPLICATION

G7508471 - G3NT1T0 - XM28D1000000001

FUEL TANK SAFETY PROCEDURES (2)

Maintenance Application of CDCCL (continued)

SB Application

Service bulletin applicable on single aisle family aircraft.

G7508471 - G3NT1T0 - XM28D1000000001

A318/A319/A320/A321

SERVICE BULLETIN
REVISION TRANSMITTAL SHEET

AIRBUS
CUSTOMER SERVICES DIRECTORATE
1 Rond Point Maurice Bellonte
31707 BLAGNAC CEDEX FRANCE
Tel : (33) 5 61 93 33 33
Telex : AIRBU 530526F
Fax : (33) 5 61 93 42 51

ATA SYSTEM : 33

TITLE : LIGHTS - CARGO AND SERVICE COMPARTMENTS - INSTALL MAINTENANCE LIGHT F1000955-01

MODIFICATION No. : 33593K9935

This page transmits Revision No. 01 of Service Bulletin No. A320-33-1044.

ADDITIONAL WORK

No additional work is required by this revision for aircraft modified by any previous issue.

REASON

This Revision is issued to :

- update the operators,
- update the Weight and Balance Information of Kit D01 and D02.

CHANGES

SUMMARY :

- REASON/DESCRIPTION/OPERATIONAL CONSEQUENCES
  . Kit price changed from 1470 to 1560 USD.
- EFFECTIVITY
  . Operators updated.

PLANNING INFORMATION :

- EFFECTIVITY
  . 1.A. Operators updated.
- WEIGHT AND BALANCE
  . 1.H. Weight and Balance updated.
- REFERENCES
  . 1.J. AMM reference 33-37-00 added.

6 DATE : Mar 25/05 SERVICE BULLETIN No. : A320-33-1044
REVISION No. : 01 - Aug 22/05 Page : 1 of 2

Printed in FRANCE © AIRBUS, 2005 All rights reserved

A318/A319/A320/A321

SERVICE BULLETIN
SUMMARY

AIRBUS
CUSTOMER SERVICES DIRECTORATE
1 Rond Point Maurice Bellonte
31707 BLAGNAC CEDEX FRANCE
Tel : (33) 5 61 93 33 33
Telex : AIRBU 530526F
Fax : (33) 5 61 93 42 51

This summary is for information only
and is not approved for modification of the aircraft

ATA SYSTEM : 33

TITLE : LIGHTS - CARGO AND SERVICE COMPARTMENTS - INSTALL MAINTENANCE LIGHT F1000955-01

MODIFICATION No. : 33593K9935

REASON/DESCRIPTION/OPERATIONAL CONSEQUENCES

The Special Federal Aviation Regulation (SFAR) 88 requests that the hydraulic area is protected against fuel vapour ignition. In order to fulfill the SFAR 88 requirements the maintenance lights 9LL and 10LL have been removed with Service Bulletin No. A320-92-1032.

This Service Bulletin details the procedure to replace maintenance lights 9LL and 10LL, PN 2LA002606-01, previously removed, with maintenance lights, PN F1000955-01.

The accomplishment of this Service Bulletin will fulfil the requirements of the SFAR 88 in maintenance areas.

EVALUATION TABLE			
COMPLIANCE	Recommended	CANCELS INSPECTION SB	No
POTENTIAL AD	No	A/C OPERATION AFFECTED	No
RELIABILITY AFFECTED	No	PAX COMFORT AFFECTED	No
COST SAVING	No	ETOPS AFFECTED	No
STRUCTURAL LIFE EXTN	No	VENDOR SB INVOLVED	No
KIT PRICE (USD)D01	1560	KIT PRICE (USD)D02	1560

EFFECTIVITY

This Service Bulletin is applicable to this (these) operator(s) :

30X 31X 53Z 57Y 72Y 83Y 88Y A1L AAF AAR ABQ ABY ACA ACI ADR AFL AFR AHY AJM ALK AMC AMU ANA ANZ ARF AUA AWE AZA BAW BES BGH BIE BMA BWG CBF CCM CES CIB CJG CNW CRX CSA CSC CSN CTN CXN CYP D2F DAT DCS DGA DKN DLH EDW EEZ EGN EIN EIR EZY F2I F2L FCA FFT FHY FIN G2X G4I G8E GBL GFA GWI GWY HDA HEJ HVN I2L IAC IBE IRM ISS IWD JBU JCS JET JKK JST KAC KYV LAJ LAN LAO LBT LTC LTE LTU LVG LXR MAU MEA MHS

6 DATE : Mar 25/05 SERVICE BULLETIN No. : A320-33-1044
REVISION No. : 01 - Aug 22/05 Page : 1 of 4

MAINTENANCE APPLICATION OF CDCCL - SB APPLICATION

G7508471 - G3NT1T0 - XM28D1000000001

FUEL TANK SAFETY PROCEDURES (2)

Maintenance Application of CDCCL (continued)

AD Application

Extract of the Airworthiness Directive.

G7508471 - G3NT1T0 - XM28D1000000001

FAA
Aircraft Certification Service

AIRWORTHINESS DIRECTIVE

www.faa.gov/aircraft/safety/alerts/
www.gpoaccess.gov/fr/advanced.html

2007-15-06 Airbus: Amendment 39-15135. Docket No. FAA-2007-27268; Directorate Identifier 2006-NM-190-AD.

Effective Date

(a) This AD becomes effective August 28, 2007.

Affected ADs

(b) None.

...

Revise ALS To Incorporate CDCCLs

(g) Within 12 months after the effective date of this AD, revise the ALS of the Instructions for Continued Airworthiness to incorporate Airbus A318/A319/A320/A321 ALS Part 5–Fuel Airworthiness Limitations, dated February 28, 2006, as defined in Airbus A318/A319/A320/A321 Fuel Airworthiness Limitations, Document 95A.1931/05, Issue 1, dated December 19, 2005 (approved by the EASA on March 14, 2006), Section 2, "Critical Design Configuration Control Limitations."

No Alternative Inspections, Inspection Intervals, or CDCCLs

(h) Except as provided by paragraph (i) of this AD: After accomplishing the actions specified in paragraphs (f) and (g) of this AD, no alternative inspections, inspection intervals, or CDCCLs may be used.

...

MAINTENANCE APPLICATION OF CDCCL - AD APPLICATION

G7508471 - G3NT1T0 - XM28D1000000001

FUEL TANK SAFETY PROCEDURES (2)

Safety Precautions

Make sure that you have the correct fire fighting equipment available.
When you have to work on a fuel system wiring, you must use test equipment that is approved (otherwise, unapproved equipment could cause fire or an explosion).
Make sure that the lighting in the work area is sufficient to work safely.
Wear protective goggles or face mask, clothes and gloves and avoid wearing metallic clothing (e.g. footwear or a belt with a metal buckle) which can cause sparks.
In the work area you must not:
- smoke,
- use flames which do not have protection,
- operate electrical equipment which is not necessary for the task,
- pull or move metal objects along the ground,
- use hearing-aids or battery-operated equipment which will cause sparks.

G7508471 - G3NT1T0 - XM28D1000000001

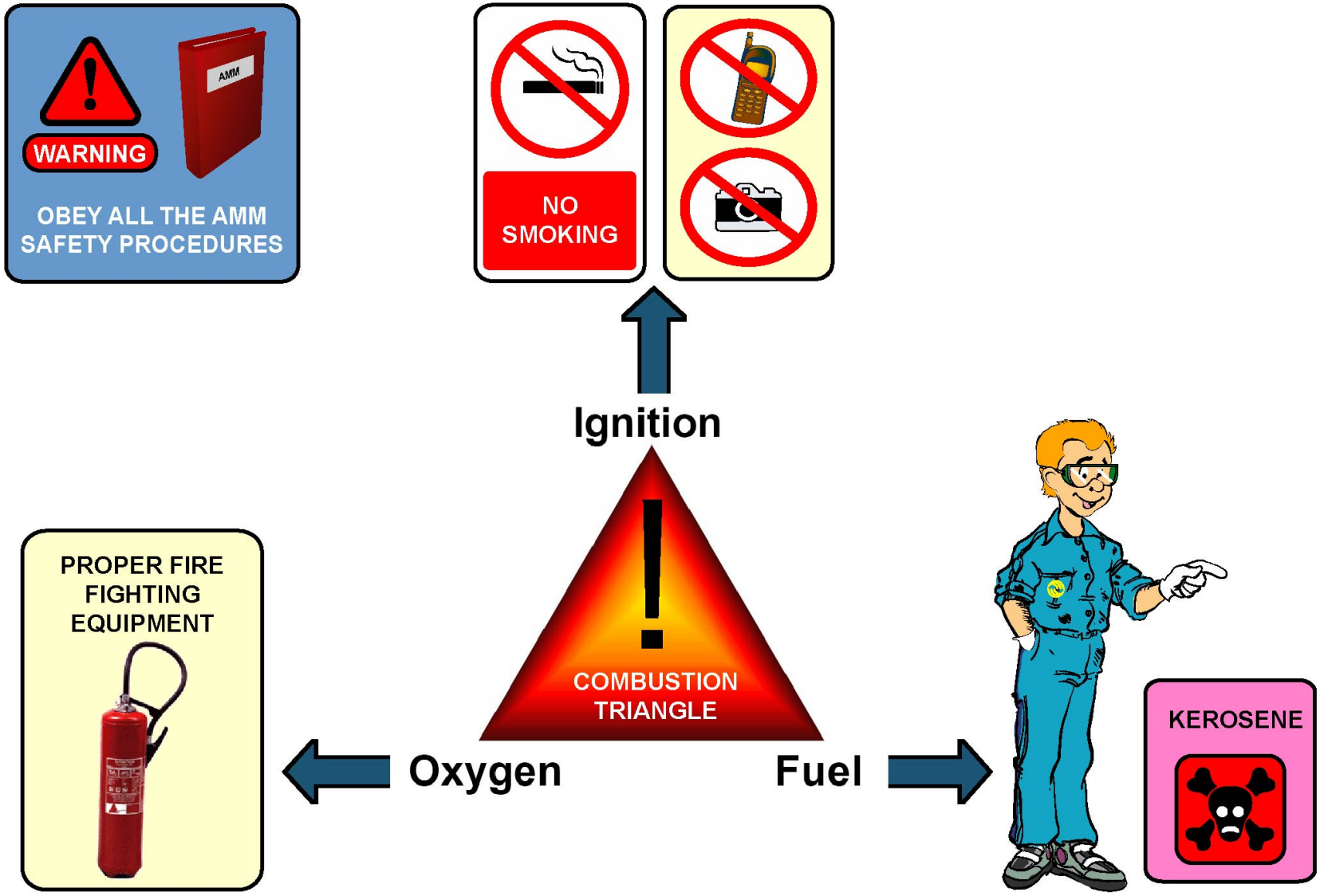

SAFETY PRECAUTIONS

G7508471 - G3NT1T0 - XM28D100000001

FUEL TANK SAFETY PROCEDURES (2)

Safety Areas And Accessibility

Put the safety barriers in position and put the warning notices, to tell persons not to operate the fuel system, not to refuel the aircraft and not to operate the flaps.
Defuel the applicable wing tank or do a ground fuel transfer. Use the ECAM to make sure that the applicable fuel tank valves are closed and drain the remaining fuel
Open and safety tag circuit breakers for refuel system, refuel panel, applicable fuel valves and SFCC (Slat Flap Control Computers).
Open the related fuel tanks access panels.

NOTE: Note: Some of these precautions are the minimum safety standard for work in a fuel tank. Local regulations can make other safety precautions necessary.

G7508471 - G3NT1T0 - XM28D1000000001

Safety barriers & warning notices must be in position prior to starting a task.

Do not operate the fuel system or the F/CTL (Slats & Flaps) or the L/G system : Movement of surrounding components can kill or injure people.

Defuel and drain the applicable wing tank.

Then open the fuel tank access panels :

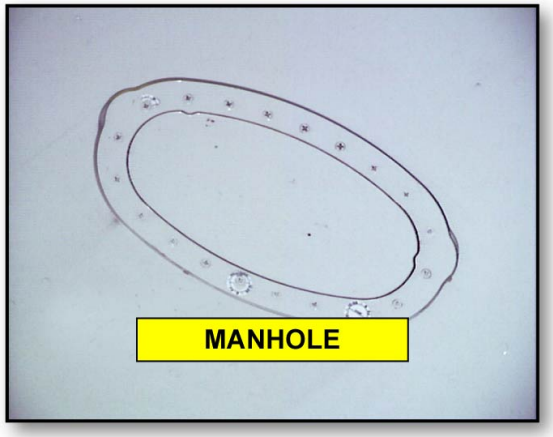

EXAMPLE OF AN UNDER-WING FUEL TANK ACCESS PANEL (MANHOLE)

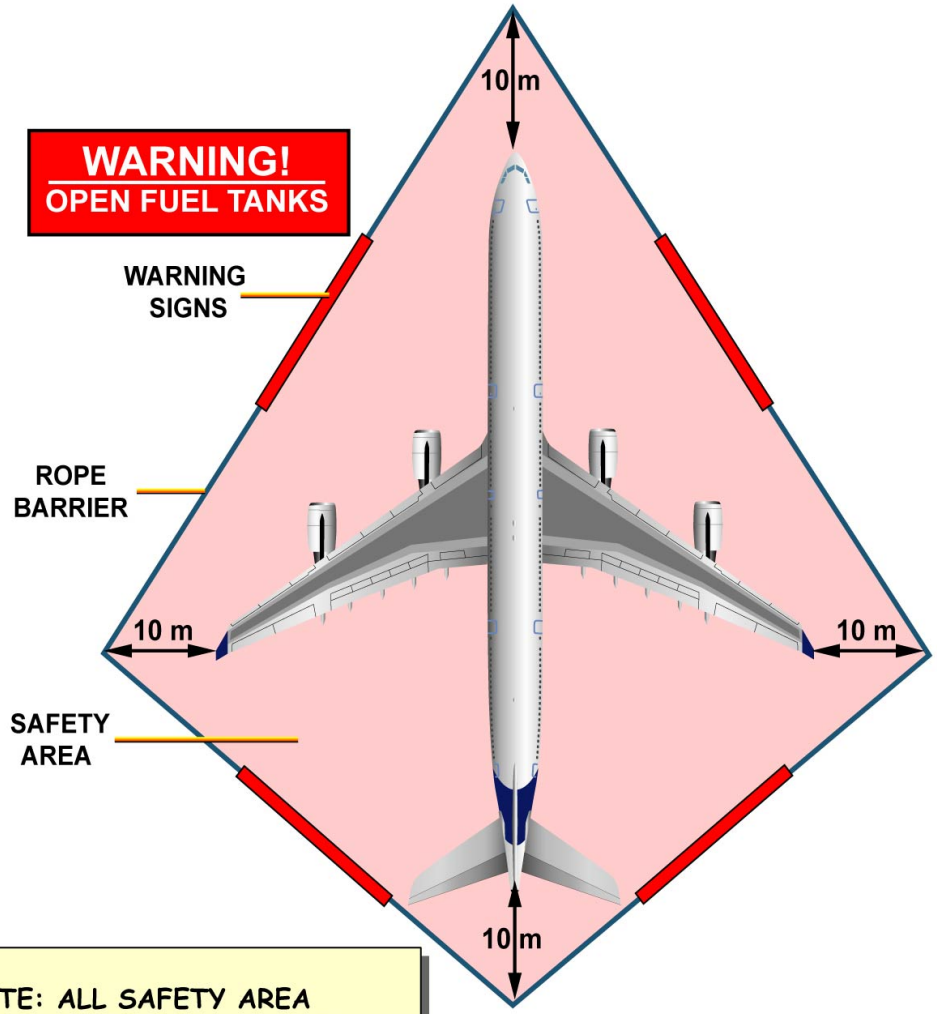

NOTE: ALL SAFETY AREA CLEARANCES ARE SUBJECT TO CHANGE ACCORDING TO LOCAL AIRPORT REGULATIONS.

SAFETY AREAS AND ACCESSIBILITY

FUEL TANK SAFETY PROCEDURES (2)

Tanks Ventilation

Vent the tanks with a proper venting system (fitted with minimum 1 air inlet & 1 air outlet).
Check with a combustible gas indicator (after minimum 6 hours of ventilation) the tanks fuel gas concentration.
The fuel gas concentration must be < 10% of the Lower Explosive Limit (LEL) before entering into the tanks.

WARNING: You must use a respirator if the fuel-gas concentration in the fuel tanks is more than 5% of the Lower Explosive Limit (LEL).

G7508471 - G3NT1T0 - XM28D1000000001

VENTING SYSTEM

Vent the tanks with a proper venting system (fitted with minimum 1 air inlet & 1 air outlet)

WARNING

KEEP THE VENTILATION AVAILABLE DURING THE COMPLETE WORK PROGRESS IN THE TANKS.

Check with a combustible gas indicator (after minimum 6 hours of ventilation) the tanks fuel gas concentration.

Fuel gas concentration must be < 10% of the Lower Explosive Limit (LEL) before entering into the tanks.

COMBUSTIBLE GAS INDICATOR

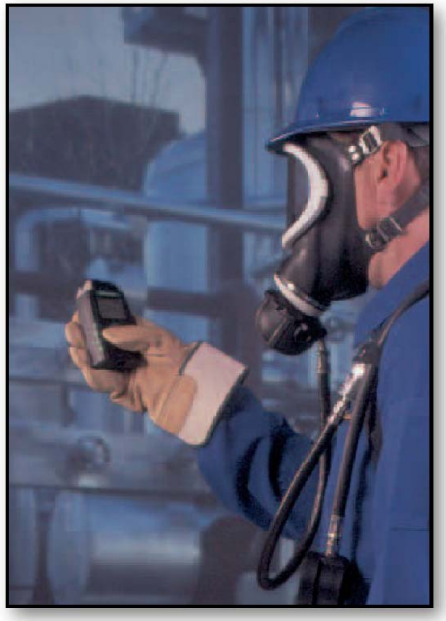

TANKS VENTILATION

FUEL TANK SAFETY PROCEDURES (2)

Entry Check-List

You must complete the Pre-Entry Checklist before you do work in a fuel tank.
Finally, get access to the applicable work area.

WARNING: S:
- do not touch or push against the magnetic level indicators when you are in the fuel tank. This will prevent damage to them.
- do not touch or push against the FQI probes when you are in the fuel tank. This will prevent damage to them and their installation.
- do not cause damage to the internal structure, sealant, electrical cables, or conduits during maintenance.

G7508471 - G3NT1T0 - XM28D1000000001

Following the AMM Fuel Safety Procedures, maintenance personnel must fill in this PRE-ENTRY CHECK LIST before entering and working in the fuel tank.

WARNING

WHEN ENTERING A FUEL TANK THROUGH A MANHOLE ACCESS PANEL, YOU MUST NOT HOLD ON SURROUNDING ELECTRICAL COMPONENTS LOCATED INSIDE THE TANKS.

EXTRACT OF AN A330 AMM FUEL TANK ENTRY CHECKLIST

This check list must be complete before you do work in the fuel tank.

Wet Fuel Tank Entry Location

Aircraft:_____ Tank:_____ Shift:_____ Date:_____

Shift Supervisor is:_____

✓ the box when you have made sure that :-

- ☐ 1. All the aircraft electrical circuits are de-energized.
- ☐ 2. The aircraft is electrically grounded.
- ☐ 3. All the access platforms and associated equipment are electrically grounded.
- ☐ 4. All the electrical ground power units are disconnected.
- ☐ 5. Access to the area is limited and warning signs are in position.
- ☐ 6. A checklist of all tools and equipment to be used in the fuel tank is available.
- ☐ 7. Only approved spark-proof lamps and torches are in the work area. Sealed vapor-lamps are not to be used.
- ☐ 8. Only approved protective clothing is used.
- ☐ 9. The tank entry person and the safety person each have two air-supplied respirators that operate satisfactorily.
- ☐ 10. Both the tank entry person and the safety person have current medical certificates for entry into tanks.
- ☐ 11. Lint free cloths and special fire-proof containers are available to remove all remaining fuel.
- ☐ 12. There is a continuous flow of clean filtered air through the fuel tank available when the person is in the tank.
- ☐ 13. The vapor concentration is less than 25% of the applicable Lower Explosion Limit (LEL).
- ☐ 14. Correct fire fighting equipment and approved persons available.
- ☐ 15. The fire department has been told.

Meter Reading

- ☐ 16. Fuel-Gas concentration (LEL) reading prior to tank entry is:_____

I confirm that all entry requirements were met before entry was made into the tanks.

_____

Signature of Supervisor Date/Time

Pre-Entry Checklist into a Wet Fuel Tank

ENTRY CHECK-LIST

G7508471 - G3NT1T0 - XM28D1000000001

FUEL TANK SAFETY PROCEDURES (2)

Working Environment

NOTE: Note: You may have to remove parts of the structure (and equipment) to get access to parts of the tank.
Use protective mats on the floor of the fuel tank to prevent:
- damage to the fuel tank structure,
- injury to persons,
- safety all components before you place them inside the fuel tank,
- all wire locking must be installed/adjusted outside the fuel tank.

Use only RED tie wraps in the fuel tanks.
Use only approved cleaning materials.
Make sure that all signs of solvents and cleaning agents are removed from the equipment/components before they are installed.
Put blanking caps on all disconnected pipes and openings in components and tanks.
Do not connect electrical equipment to a power source less than 30 meters away, unless the power source has spark-proof connectors.
You must obey the fuel safety procedures when you do work in a fuel tank. When differences occur, you must use the approved precautions of this procedure.

WARNING: Do not use metallic wire wool in fuel tanks.

G7508471 - G3NT1T0 - XM28D1000000001

WARNING

OBEY THE SAFETY PROCEDURE WHEN YOU DO WORK IN A FUEL TANK. THIS WILL PREVENT INJURY OR DAMAGE.

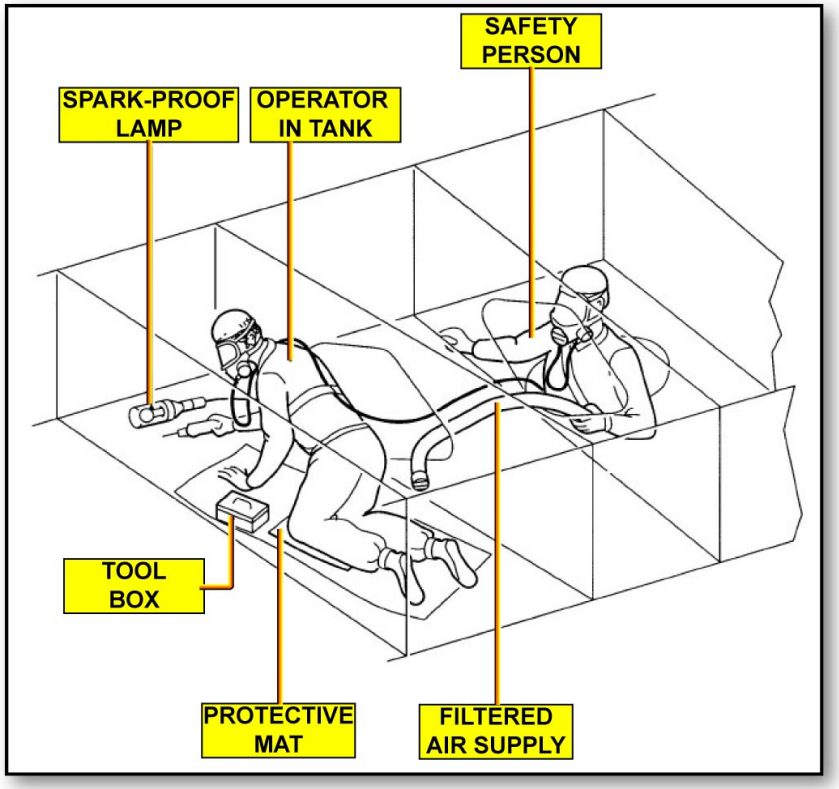

Maintenance personnel working in fuel tanks must :
- work in team (safety person required)
- use proper lighting(e.g. spark proof lamp)
- use proper filtered air supply
- use protective mats on the floor to prevent damage to people and structure
- make sure that all the fuel system components have correct electrical bonding.
- record the removed parts and record the position of each panel bolt. This will prevent damage to the structure.

WORKING ENVIRONMENT

FUEL TANK SAFETY PROCEDURES (2)

Close-Up

After completion of a work in a fuel tank, personnel must make sure that:
- the work area is clear of tools,
- the work area is clean,
- no electrical equipment has been damaged and disconnected,
- all the fuel system components have a correct electrical bonding,
- all access panels are back in their original position (e.g. rib access panels).

G7508471 - G3NT1T0 - XM28D1000000001

After completion of a work in a fuel tank, personnel must make sure that :
- the work area is clear of tools
- the work area is clean
- no electrical equipment has been damaged and disconnected
- all the fuel system components have a correct electrical bonding.
- all access panels are back in their original position (e.g. rib access panels)

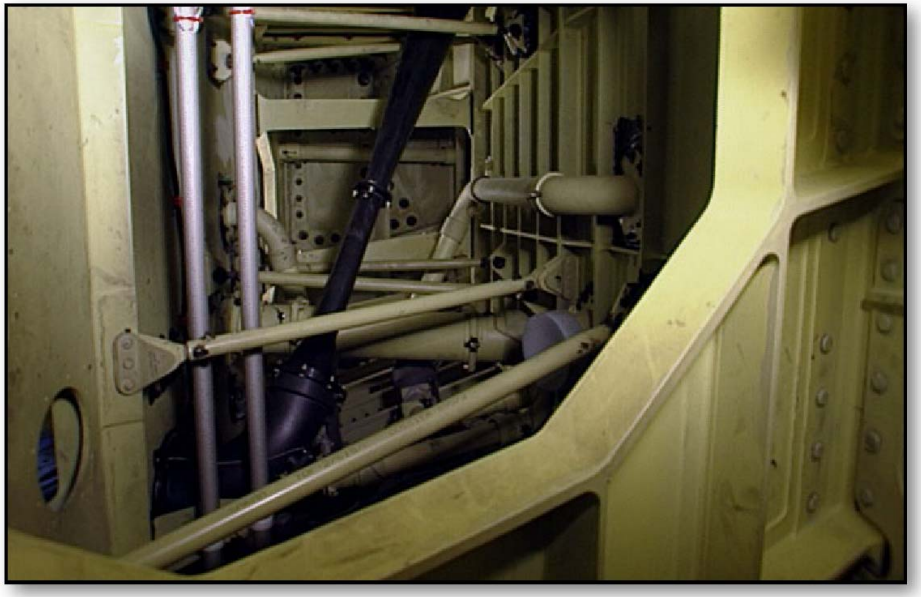

EXAMPLE OF AN AIRBUS A330/A340 WING FUEL TANK (COLLECTOR CELL)

CLOSE-UP

FUEL SYSTEM BASE MAINTENANCE (3)

GENERAL REFUEL/DEFUEL SAFETY PROCEDURES

WARNING: ALWAYS CONNECT THE GROUND CABLE TO THE PARKING GROUND POINT BEFORE YOU CONNECT IT TO THE A/C. DO NOT ATTACH THE CABLE TO THE A/C FIRST (THERE IS A RISK OF ELECTRIC SHOCK).

Make sure that all fuel system electrical circuits are complete. Do not spill fuel on the engines or brakes. Ground and bond the A/C.
Make sure that the refuel safety area is clear and respect the safety distances:
- 60 meters: stop and do not operate fuel tanker 60 m from the A/C nose during weather radar operation,
- 30 meters: do not refuel within 30 m while testing radar or HF radio equipment.

15 meters:
- NO SMOKING notices should be placed at least 15 m around the refuel/defuel area,
- no electrical equipment within 15 m, refuel/defuel equipment,
- fuel tank vents should not be within 15 m of any building.

6 meters:
- Ground Power Units (GPUs) must be at least 6 m from the A/C fueling and venting points,
- flash bulbs/flash equipment must not be used within 6 m of the A/C fueling and venting points,
- the refuel/defuel safety zone extends at least 6 m from the A/C fueling and venting points,
- inside the 6 m safety zone - no matches, radios, cell phones, mobile phones, pagers, etc.

Check the PARKing BRake is ON and check the blue accumulator pressure.
The increased weight of the fuel may cause chocks to get stuck under the tires:
- move the aft NLG chocks away from the tires,
- reposition the MLG chocks away from the tires.

Make sure that there is fire-fighting equipment/personnel available and do not run engines during refuel/defuel procedures. APU starts or shutdowns are permitted during refuel/defuel procedures, but:
- starting is not permitted if the APU has failed to start or an automatic shutdown has occurred,
- a normal APU shutdown must be completed if a fuel spill has occurred.

Make sure that any electrical equipment used will not cause sparks. Do not refuel/defuel in bad weather conditions, lightning can be dangerous.
During the refuel/defuel procedure:
- do not operate A/C external lighting,
- do not fill the oxygen system,
- do not use the microphone for HF transmissions,
- do only essential maintenance and servicing that will not cause sparks.

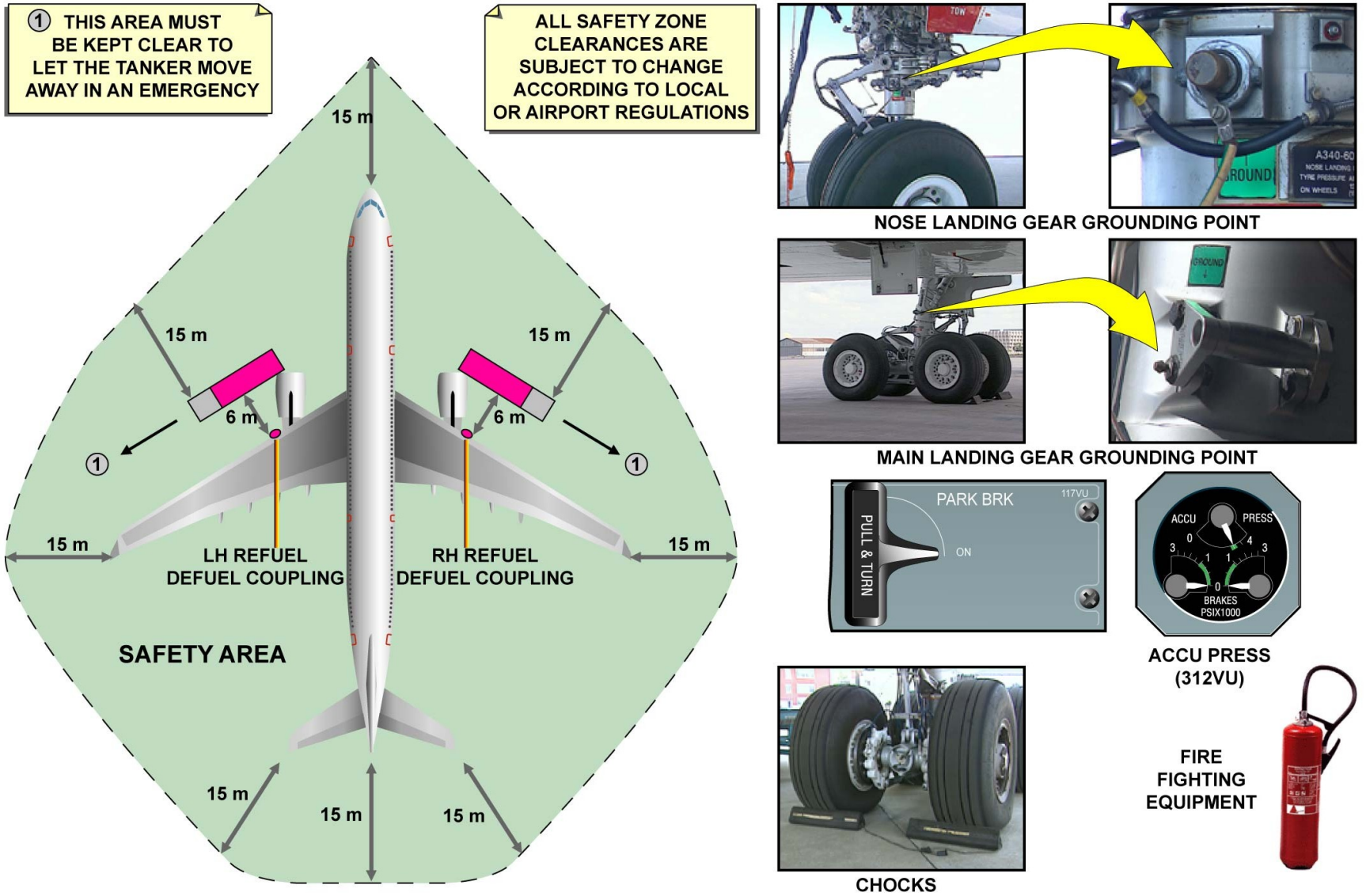

GENERAL REFUEL/DEFUEL SAFETY PROCEDURES

G7508471 - G3NT1T0 - FM28Y2BASEMCE03

FUEL SYSTEM BASE MAINTENANCE (3)

BLEEDING OF THE APU FUEL LINE

This topic describes the bleeding of the APU fuel line.
Put the warning notices in position:
- on the FUEL panel, to tell people not to operate the fuel system,
- on the refuel/defuel panel, to tell people not to refuel the A/C.

Install the mechanical input/rigging in the mechanical input of the THS actuator.
Open the APU access doors and safety them in the open position.
Put a 10 l container in position below the vent and drain valve.
To bleed the APU fuel line:
- remove the cap from the vent and drain valve,
- install the ADAPTER - VENT AND DRAIN VALVE, APU on the vent and drain valve,
- on the firewall, inside of the APU compartment (FR94), push the FUEL VENT line P/BSW,
- when the fuel flows out of the drain hose without air, release the FUEL VENT line P/BSW,
- remove the ADAPTER - VENT AND DRAIN VALVE, APU from the vent and drain valve,
- install the cap at the vent and drain valve and tighten it with your hand.

Remove all the fixtures, tools, test and support equipment used during this procedure. The task is now completed.

Bleeding of the APU fuel line

...

Job set-up

...

Put the warning notices and the RIGGING PIN of the THS actuator

Get Access

...

Procedure

...

Bleeding of the APU fuel line

...

Close-up

...

BLEEDING OF THE APU FUEL LINE

Bleeding of the APU fuel line
...
Job set-up
...

Put the warning notices:
✓ - on the panel 245VU, to tell people not to operate the fuel system,
✓ - on the panel 990VU, to tell people not to refuel the aircraft.
...
Install the MECHANICAL INPUT - RIGGING PIN in the mechanical input of the THS actuator.
...

Get Access
...
Procedure
...

Bleeding of the APU fuel line
...
Close-up
...

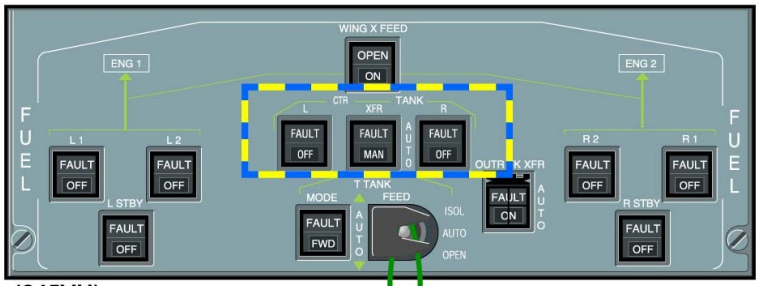

(245VU)

A330-200 ONLY

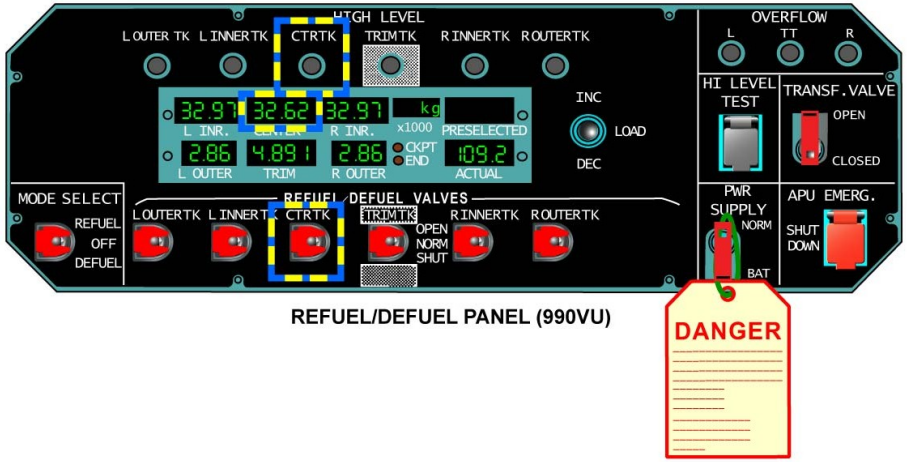

REFUEL/DEFUEL PANEL (990VU)

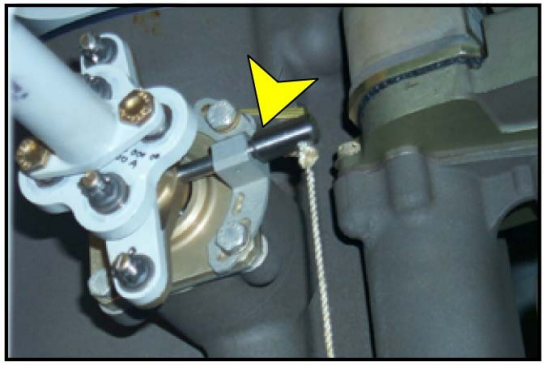

RIGGING PIN (0U191067) IN THE MECHANICAL INPUT OF THE THS ACTUATOR

BLEEDING OF THE APU FUEL LINE

G7508471 - G3NT1T0 - FM28Y2BASEMCE03

Bleeding of the APU fuel line

...

Job set-up

...

✓ **Put the warning notices and the RIGGING PIN of the THS actuator**

⇨ **Get Access**

✓ Open the access doors 315AL and 316AR and safety them in open position.

...

⇨ Put a 10 l container in position below the vent and drain valve.

...

...

Procedure

...

Bleeding of the APU fuel line

...

Close-up

...

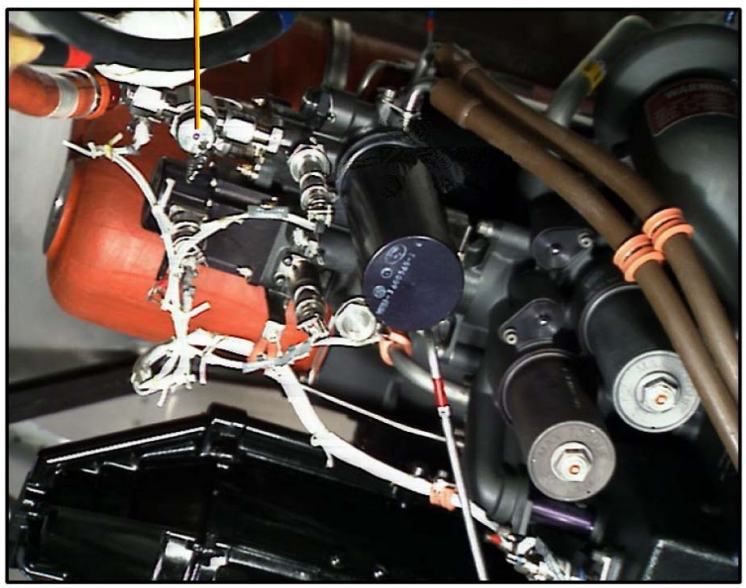

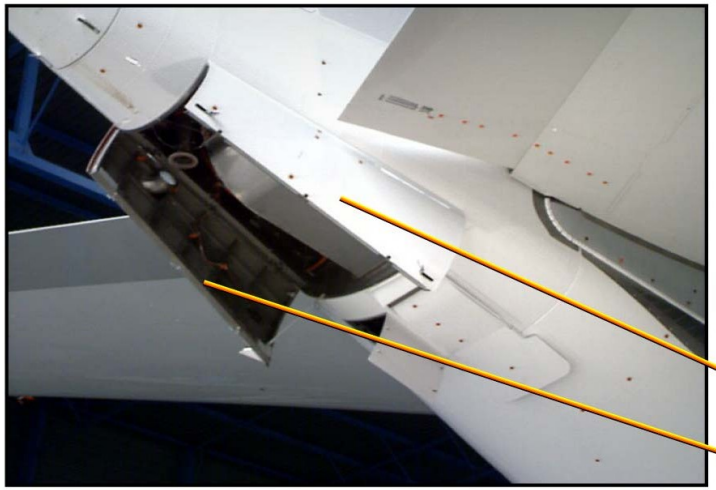

BLEEDING OF THE APU FUEL LINE

Bleeding of the APU fuel line

...

✓ **Job set-up**

...

✓ **Put the warning notices and the RIGGING PIN of the THS actuator**

✓ **Get Access**

...

Procedure

...

⇨ **Bleeding of the APU fuel line**

- ✓ Remove the cap from the vent and drain valve.
- ✓ Install the ADAPTER - VENT AND DRAIN VALVE, APU on the vent and drain valve.
- ✓ On the firewall, inside of the APU compartment (FR94), push the FUEL VENT line P/BSW.
- ✓ When the fuel flows out of the drain hose without air, release the FUEL VENT line P/BSW.
- ✓ Remove the ADAPTER - VENT AND DRAIN VALVE, APU from the vent and drain valve.
- ⇨ Install the cap at the vent and drain valve and tighten it with your hand.

...

...

Close-up

...

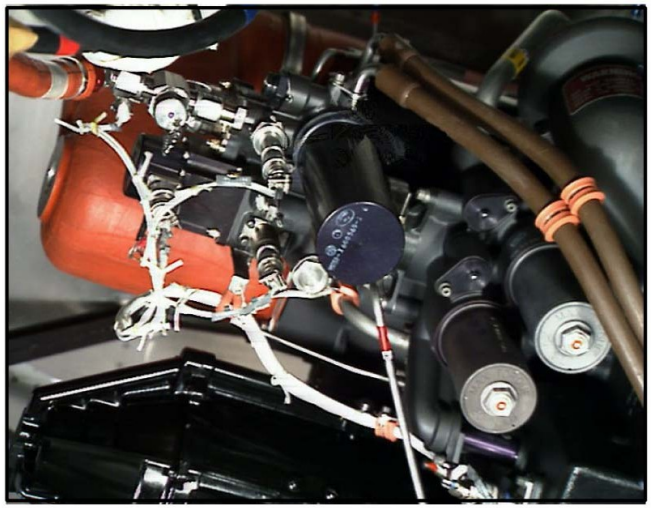

APU VENT AND DRAIN VALVE

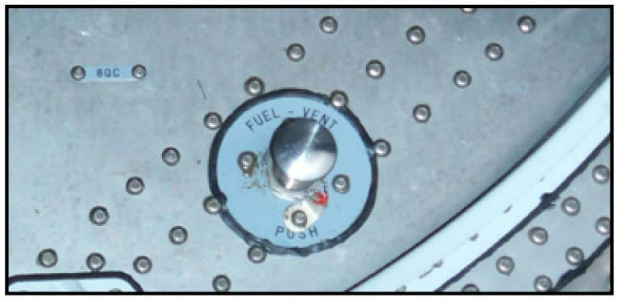

FUEL VENT line P/BSW

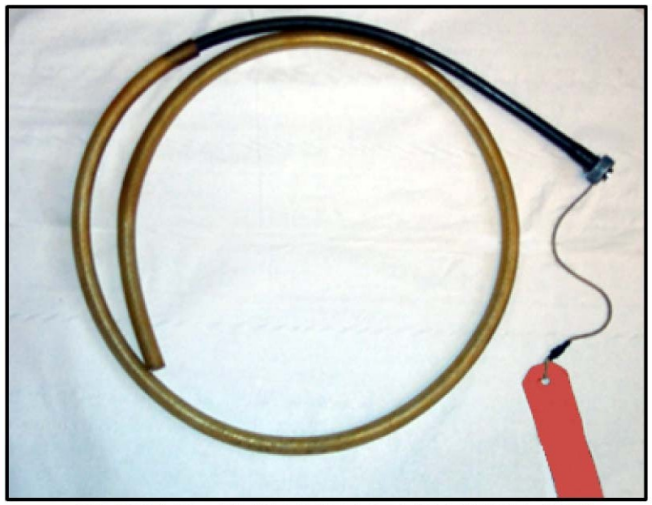

ADAPTER - VENT AND DRAIN VALVE, APU (98A28007570000)

BLEEDING OF THE APU FUEL LINE

Bleeding of the APU fuel line

...
✓ Job set-up
...
✓ Put the warning notices and the RIGGING PIN of the THS actuator
✓ Get Access
...
✓ Procedure
...
✓ Bleeding of the APU fuel line
...
✓ Close-up
...

TASK COMPLETED

BLEEDING OF THE APU FUEL LINE

AIRBUS S.A.S.
31707 BLAGNAC cedex, FRANCE
STM
REFERENCE G7508471
NOVEMBER 2008
PRINTED IN FRANCE
AIRBUS S.A.S. 2008
ALL RIGHTS RESERVED

AN EADS COMPANY

A330-200/300
TECHNICAL TRAINING MANUAL
MAINTENANCE COURSE - T1 (LVL 2&3) (RR Trent 700)
HYDRAULIC POWER

This document must be used for training purposes only

Under no circumstances should this document be used as a reference

It will not be updated.

All rights reserved
No part of this manual may be reproduced in any form,
by photostat, microfilm, retrieval system, or any other means,
without the prior written permission of AIRBUS S.A.S.

AIRBUS Environmental Recommendation
Please consider your environmental responsability before printing this document.

HYDRAULIC POWER

Hydraulic System Line Maintenance Briefing (2) 2
Circuit Identification and Routing (2) 44
Filling Presentation (2) 50
Pressurization Presentation (2) 60
Green Hydraulic System D/O (3) 66
Blue Hydraulic System D/O (3) 100
Yellow Hydraulic System D/O (3) 128
Seal Drain D/O (3) 152
Leak Test D/O (3) 156

MAINTENANCE PRACTICE

RAM Air Turbine MAN Deployment SYS Line MAINT (2) 162

HYDRAULIC SYSTEM LINE MAINTENANCE BRIEFING (2)

SYSTEM OVERVIEW

GENERAL

There are three independent hydraulic systems: Green, Blue and Yellow. In normal operation, they are powered by Engine-Driven Pumps (EDPs) at a nominal pressure of 3.000 psi. The hydraulic supply to the EDPs can be shut off in case of emergency by means of the Fire Shut-Off Valves (FSOVs). Auxiliary power is supplied by electric pumps. A Ram Air Turbine (RAT) is included in the green system for emergencies. The Hydraulic System Monitoring Unit (HSMU) is used to monitor each hydraulic system, records failures, gives automatic control of the RAT extension, control of the electric pumps, and automatic closure of green FSOVs at green reservoir low level.

Each system has its own air pressurized reservoir in order to prevent pump cavitation. The fluid supply to each EDP is done via a motorized FSOV. These valves can be closed manually or automatically (FSOVs green 1 & 2) following some failures.

Each engine accessory gearbox drives two variable displacement hydraulic pumps. The pump maintains a system nominal pressure of 3000 psi. Each EDP is lubricated by the hydraulic fluid. Each system has an auxiliary electric pump. All the electric pumps can be manually started for maintenance operation on ground or anytime in flight. On the yellow system, the electric pump operates automatically during cargo door operation.

Each system has an accumulator to maintain a constant pressure during normal operation to cover transient demands. For each system, a leak measurement valve is located downstream of the pumps. They are controlled in the cockpit and isolate the flight control surfaces (on ground only).

The RAT is installed on the green system and can be manually or automatically extended following failures in flight. The RAT compartment is closed by a RAT operated door. A hand pump is installed on the yellow system and is only used for cargo door operation. Another pump is installed on the green ground service panel for reservoir filling.

G7508471 - G3NT1T0 - FM29B100000003

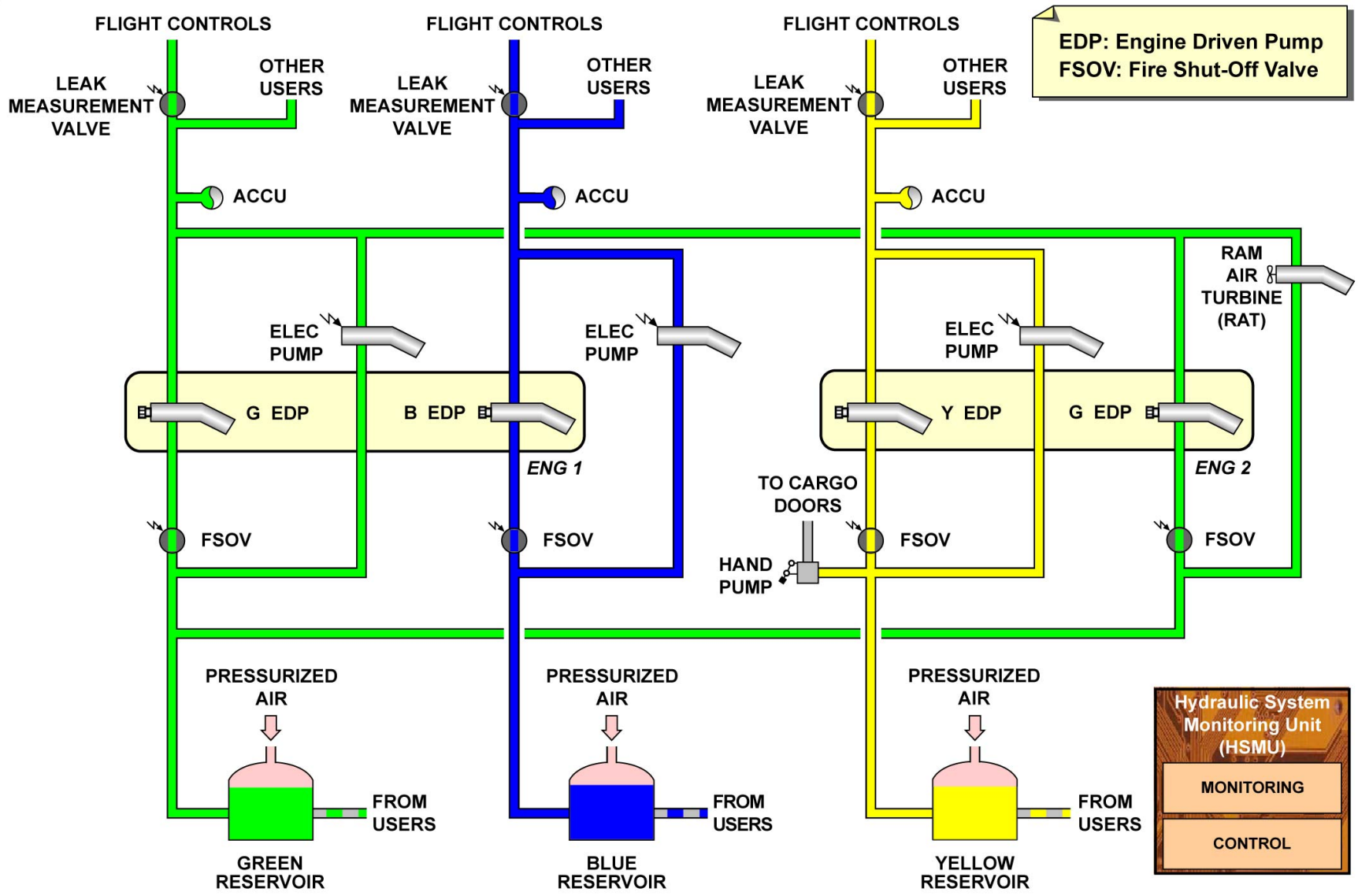

SYSTEM OVERVIEW - GENERAL

G7508471 - G3NT1T0 - FM29B100000003

HYDRAULIC SYSTEM LINE MAINTENANCE BRIEFING (2)

SYSTEM OVERVIEW (continued)

USERS

The blue system supplies the thrust reverser 1 and the yellow system supplies the thrust reverser 2 (RR and PW engines only). The flight controls supply, which is evenly divided between the three hydraulic systems, is done through the leak measurement valves. These valves can be closed for maintenance operation. The hydraulic supplied to the heavy users is taken before the leak measurement valves, and the green system includes a priority valve which cuts the supply to the L/G, nose wheel steering and emergency generator in case of green low pressure.

G7508471 - G3NT1T0 - FM29B100000003

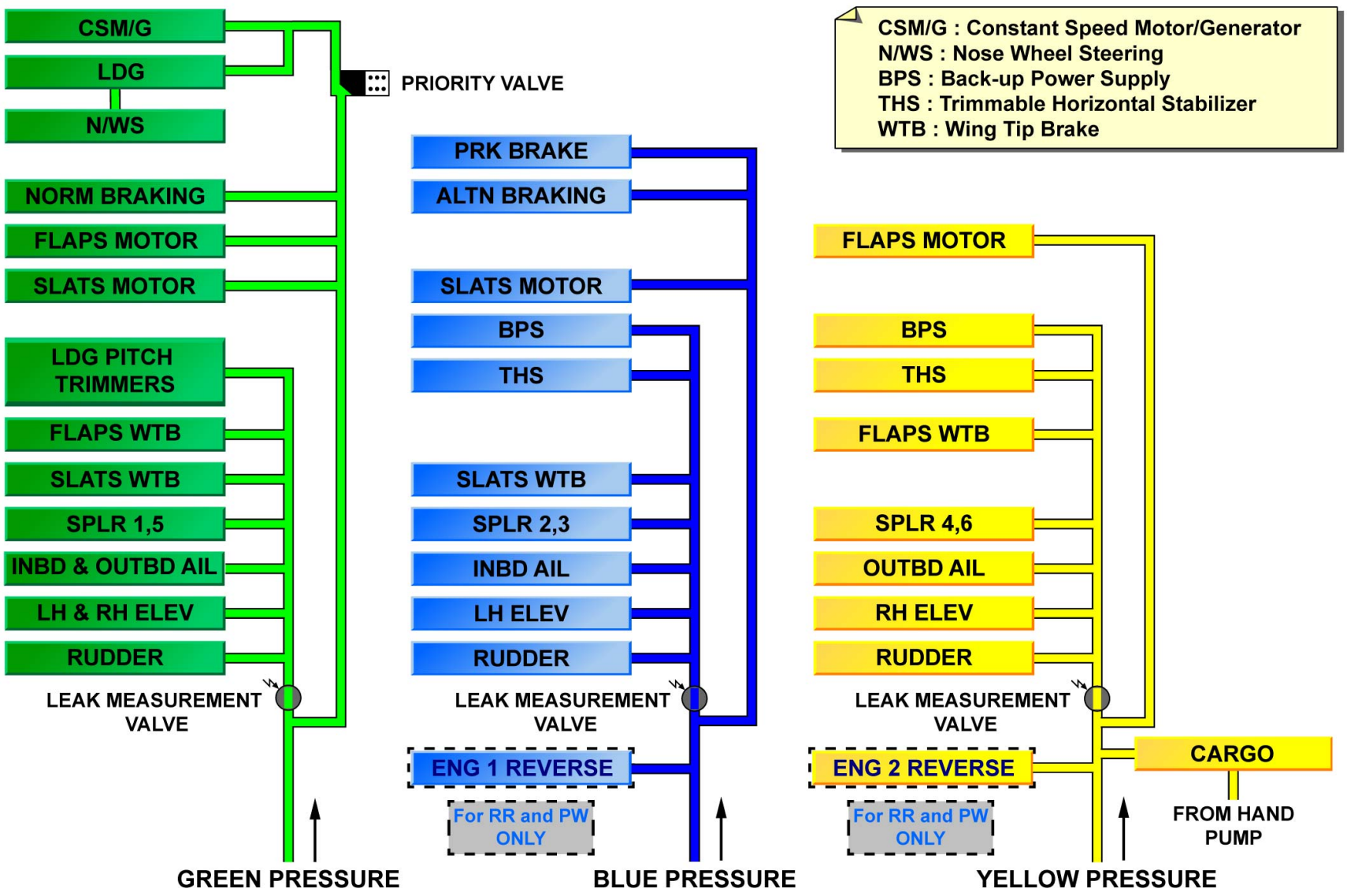

SYSTEM OVERVIEW - USERS

G7508471 - G3NT1T0 - FM29B100000003

HYDRAULIC SYSTEM LINE MAINTENANCE BRIEFING (2)

SYSTEM OVERVIEW (continued)

RESERVOIRS

The green reservoir is located inside the MLG bay, on the left section of the aft wall. The yellow reservoir is located inside the yellow hydraulic compartment, on the right forward section of the belly fairing. The blue reservoir is located inside the blue hydraulic compartment, on the left forward section of the belly fairing.

ENGINE PUMPS

The green EDPs are attached to the accessory gearbox at the bottom of the engines 1 and 2. The blue EDP is attached to the accessory gearbox at the bottom of the engine 1. The yellow EDP is attached to the accessory gearbox at the bottom of the engine 2.

G7508471 - G3NT1T0 - FM29B100000003

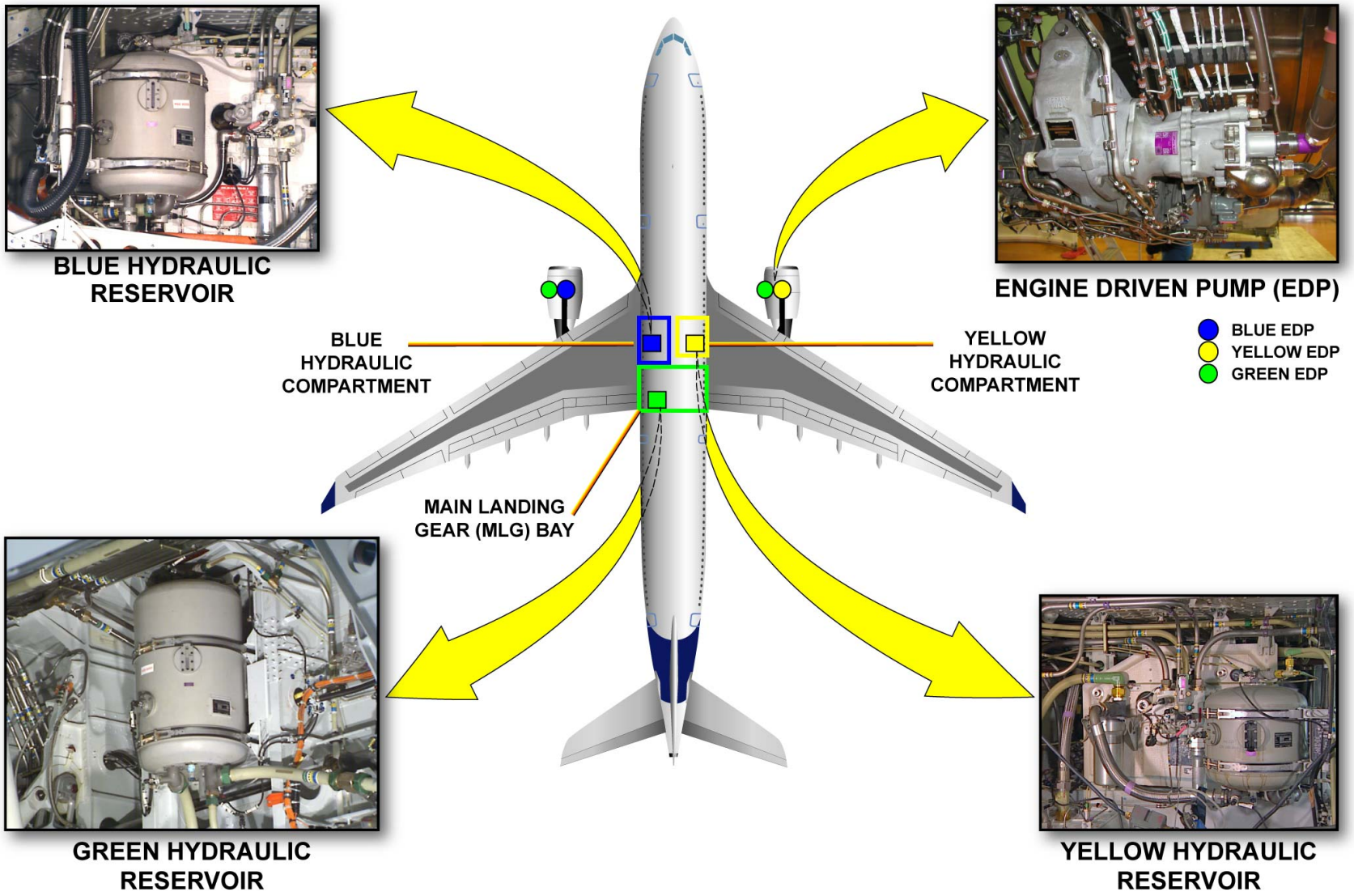

SYSTEM OVERVIEW - RESERVOIRS & ENGINE PUMPS

HYDRAULIC SYSTEM LINE MAINTENANCE BRIEFING (2)

SYSTEM OVERVIEW (continued)

ELECTRICAL PUMPS

The green electrical pump is located inside the MLG bay, on the left section of the aft wall. The yellow electrical pump is located inside the yellow hydraulic compartment, on the right forward section of the belly fairing. The blue electrical pump is located inside the blue hydraulic compartment, on the left forward section of the belly fairing.

RAM AIR TURBINE

The RAT and related components (Green system) are located on the right wing in the fairing of the flap track number 4(fairing No3).

G7508471 - G3NT1T0 - FM29B100000003

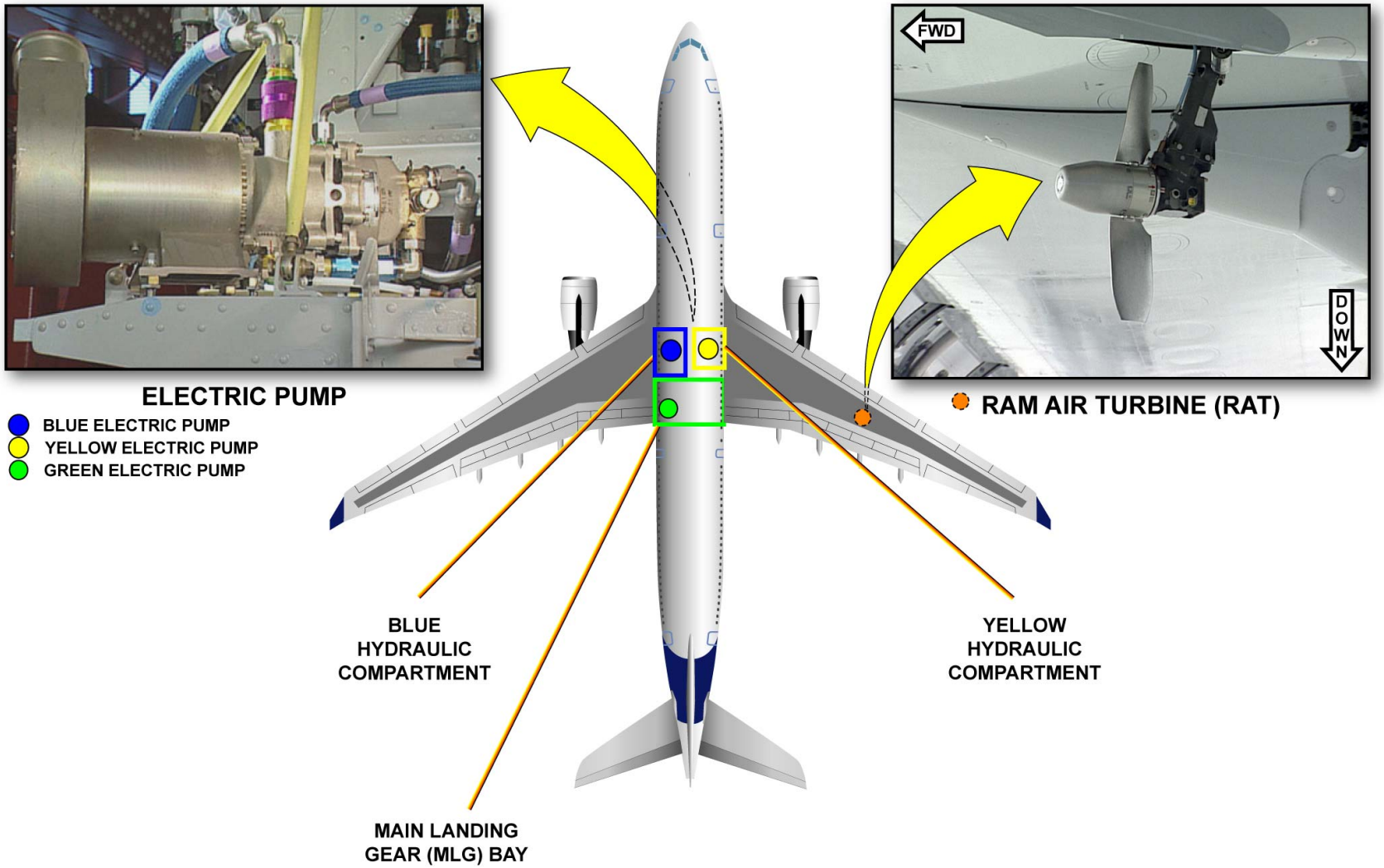

SYSTEM OVERVIEW - ELECTRICAL PUMPS & RAM AIR TURBINE

G7508471 - G3NT1T0 - FM29B100000003

HYDRAULIC SYSTEM LINE MAINTENANCE BRIEFING (2)

SYSTEM OVERVIEW (continued)

SERVICING PANELS

The hydraulic servicing panels are located on the belly fairing on the left aft section for the green system, left forward section for the blue system and on the right forward section for the yellow system.

G7508471 - G3NT1T0 - FM29B100000003

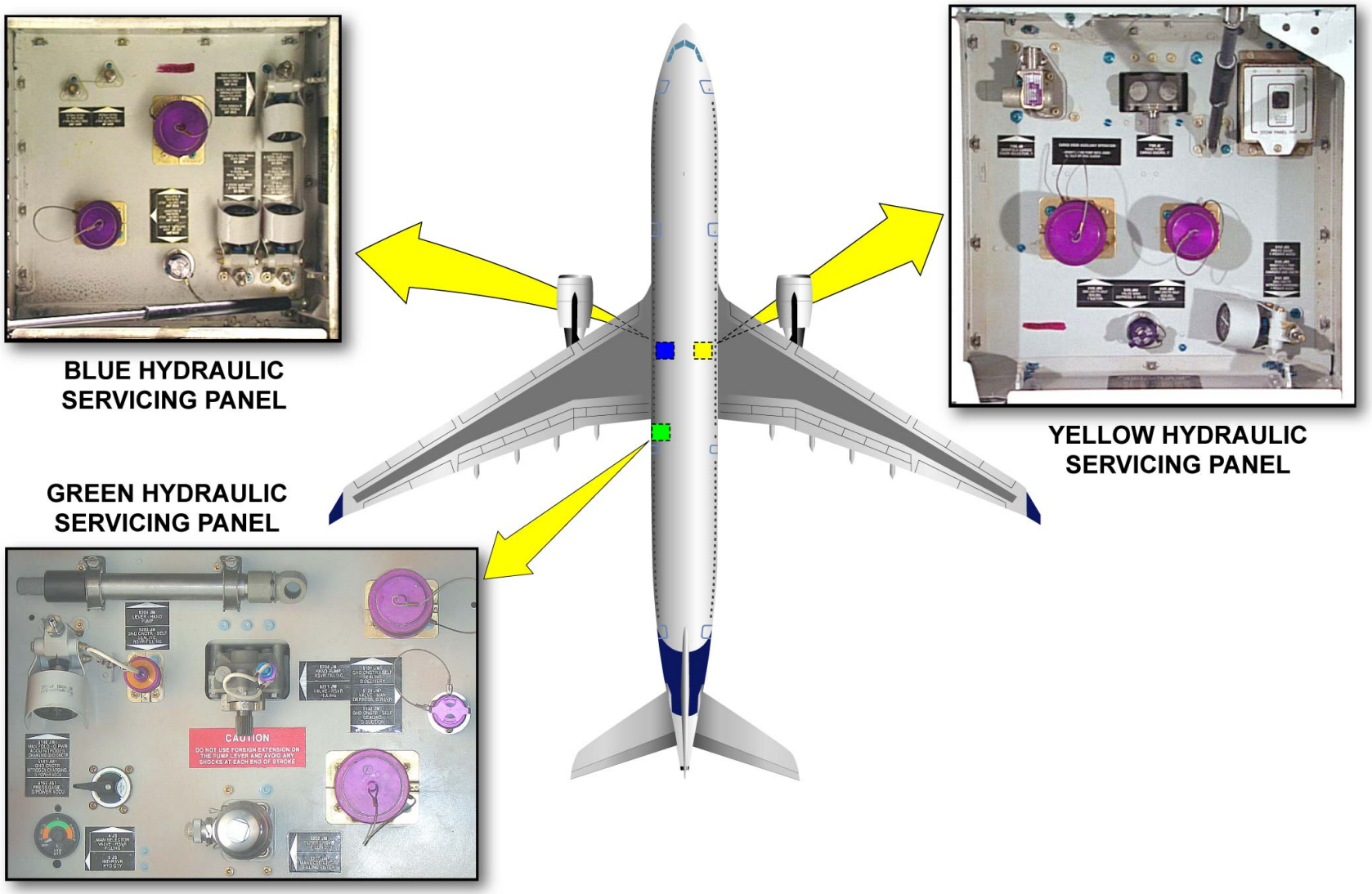

SYSTEM OVERVIEW - SERVICING PANELS

HYDRAULIC SYSTEM LINE MAINTENANCE BRIEFING (2)

SYSTEM OVERVIEW (continued)

HSMU

The HSMU is located inside of the electronic compartment in the electronic rack 800VU.

G7508471 - G3NT1T0 - FM29B100000003

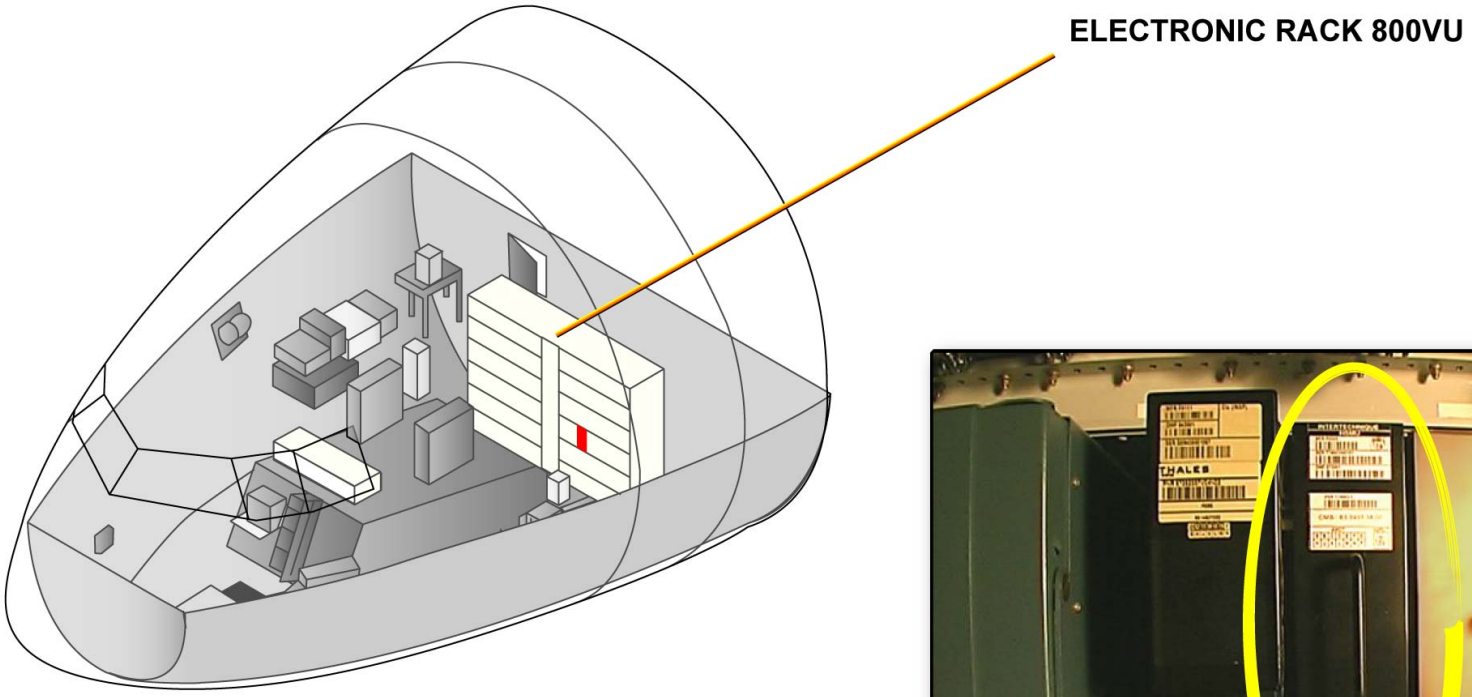

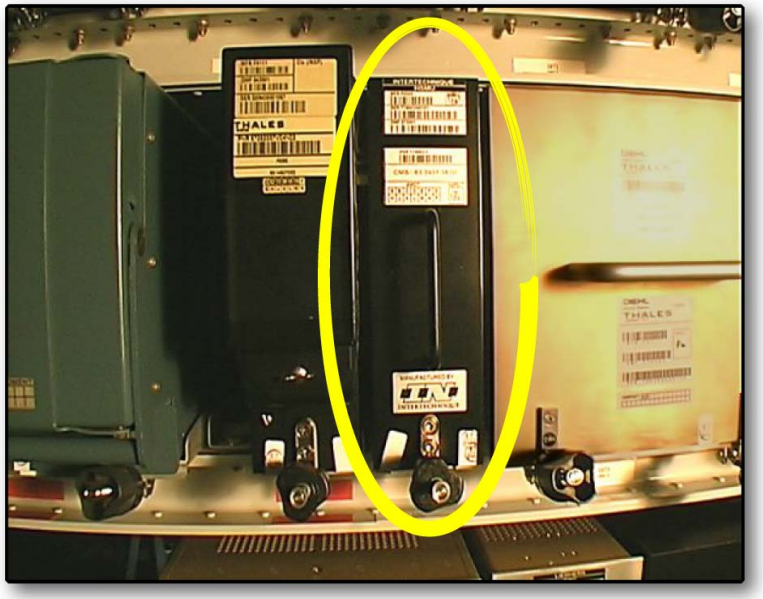

HYDRAULIC SYSTEM MONITORING UNIT (HSMU)

SYSTEM OVERVIEW - HSMU

G7508471 - G3NT1T0 - FM29B100000003

HYDRAULIC SYSTEM LINE MAINTENANCE BRIEFING (2)

SYSTEM OVERVIEW (continued)

MAINTENANCE/TEST FACILITIES

The HSMU has a BITE that tests, manages and records failures to help the maintenance operations. HSMU BITE information is sent to the MCDUs though the Central Maintenance Computers.

G7508471 - G3NT1T0 - FM29B100000003

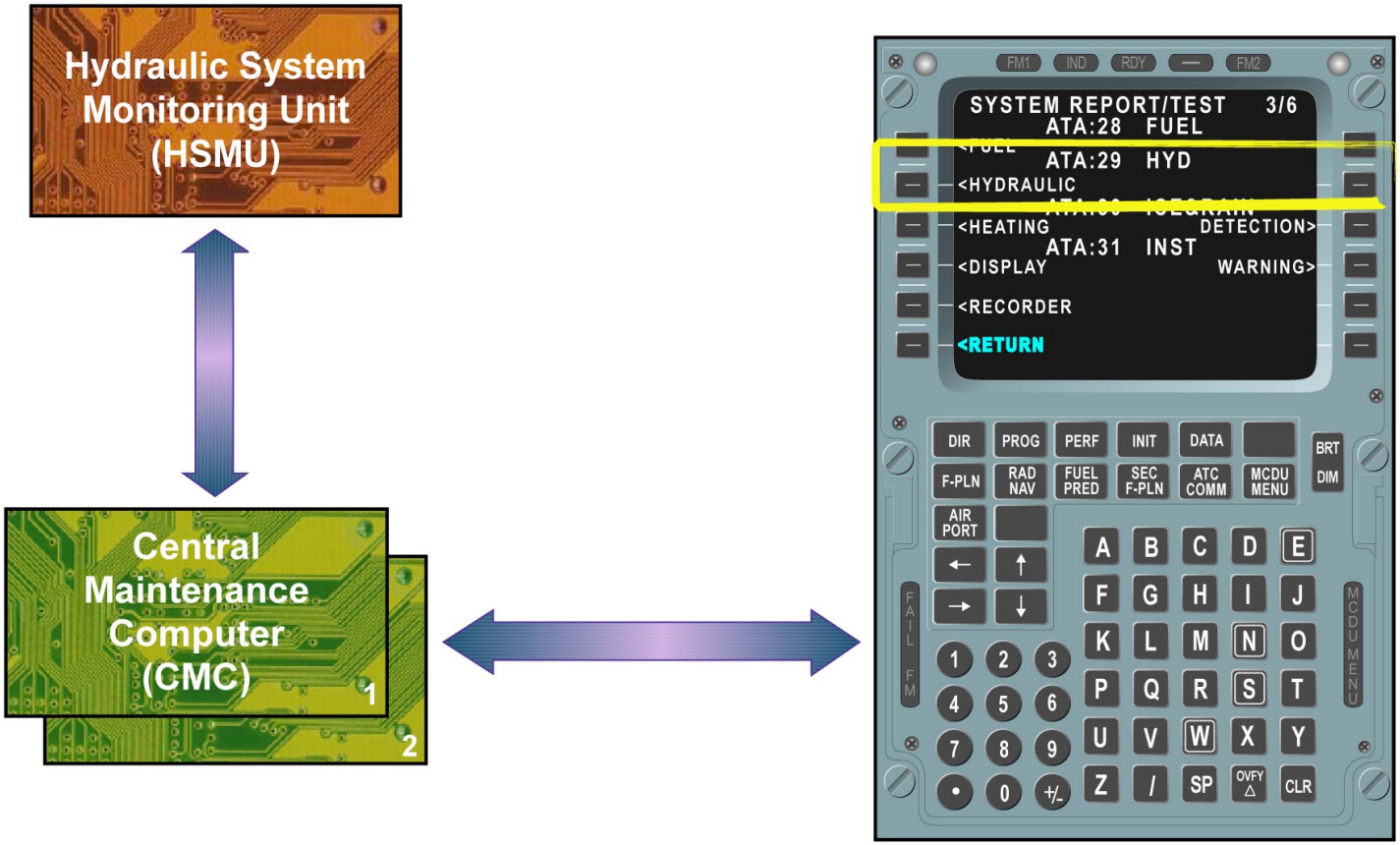

SYSTEM OVERVIEW - MAINTENANCE/TEST FACILITIES

HYDRAULIC SYSTEM LINE MAINTENANCE BRIEFING (2)

SYSTEM OVERVIEW (continued)

SAFETY PRECAUTIONS

When you work on aircraft, make sure that you obey all the Aircraft Maintenance Manual safety procedures. This will prevent injury to persons and/or damage to the aircraft. Here is an overview of the main safety precautions relative to the hydraulic power system. Make sure that the hydraulic system in maintenance is isolated before you pressurize the other hydraulic systems. Do not get hydraulic fluid or hot gas from the hydraulic reservoir on your body. Use protective clothing to prevent risk of poisoning and burns. Use solvents, jointing compound and other special materials in a ventilated area. To prevent inadvertent breathing or contact with your body, use applicable gloves, eye protections and face mask.

During the hydraulic leak check, do not touch the hydraulic components under high pressure and do not stay near these components. Put on protective clothing to prevent inadvertent fluid injection. Do not use engine oil / chlorine solvents on the hydraulic systems. This will prevent contamination of the hydraulic fluid and damage to the components.

Do not touch the hydraulic system components until they are cool. The engine components stay hot and can burn you. Be careful during removal/installation of heavy components to prevent injury to persons and damage to equipment. Do not push the RAT MANual ON P/B for more than 1 minute this will prevent damage. During the RAT test, which can lead to RAT extension, keep all persons away from the RAT area and make sure that the RAT travel range is clear. Movement of the RAT can cause injury and/or damage.

G7508471 - G3NT1T0 - FM29B100000003

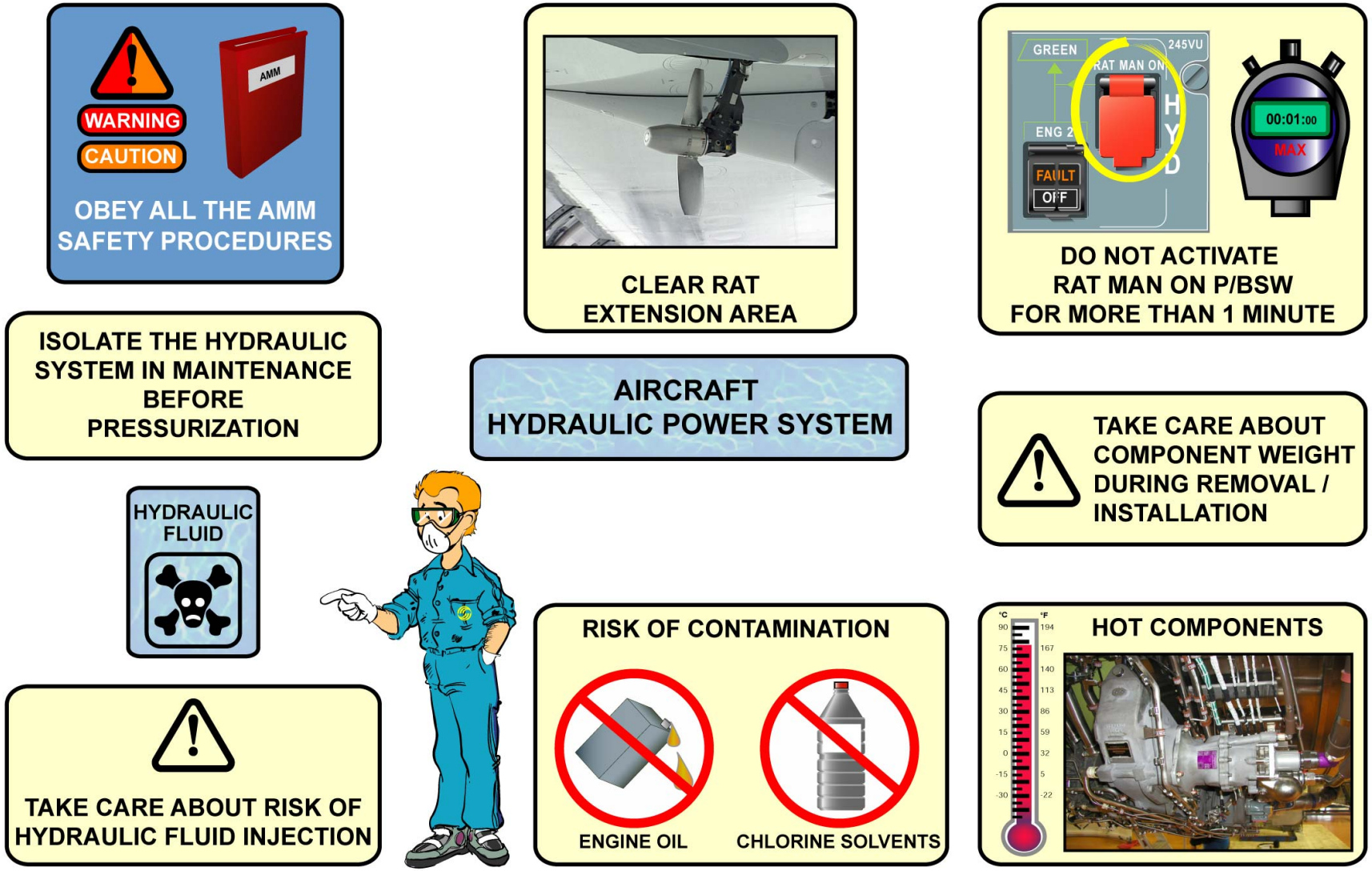

SYSTEM OVERVIEW - SAFETY PRECAUTIONS

G7508471 - G3NT1T0 - FM29B100000003

HYDRAULIC SYSTEM LINE MAINTENANCE BRIEFING (2)

SERVICING

CHECK OF THE RESERVOIR FLUID LEVEL

As the AMM procedure is similar for all the reservoirs, the blue reservoir has been chosen as an example. Make sure the aircraft follows all the conditions:
- speed brakes and spoilers retracted,
- thrust reversers stowed,
- L/G extended with doors closed,
- reservoirs pressurized.

Confirm on the ECAM HYD page that the hydraulic systems are depressurized.
Make sure that the pressure of all pre-charged nitrogen accumulators is correctly adjusted. Pressurize the blue hydraulic system to fill the brake accumulators. Maintain electric pump operation for 1 minute after 3000 psi is achieved.
Make sure that the three reservoirs are correctly pressurized, the reading is done via the air pressure reading gauge set on the top of each reservoir.
Use the manual selector valve installed on the green ground service panel to check the reservoir levels. For each reservoir, the hydraulic reservoir quantity indicator must be on the 0 position, in the center of the green arc.
Check the reservoir content levels by using the ECAM HYD page. If no other hydraulic servicing tasks have to be done, the area can be closed. All tools, test and support used during this procedure have to be removed.

G7508471 - G3NT1T0 - FM29B100000003

Aircraft maintenance configuration:

Make sure that the aircraft is in this configuration:
- the speedbrakes and the spoilers are retracted,
- the thrust reversers are stowed,
- the landing gear is extended and the landing gear doors are closed,
- all the other hydraulic services are in the normal position,
- the FWD and AFT cargo-compartment doors are closed.

Make sure that the hydraulic systems are depressurized and put them in the maintenance configuration.

Depressurized hydraulic systems.

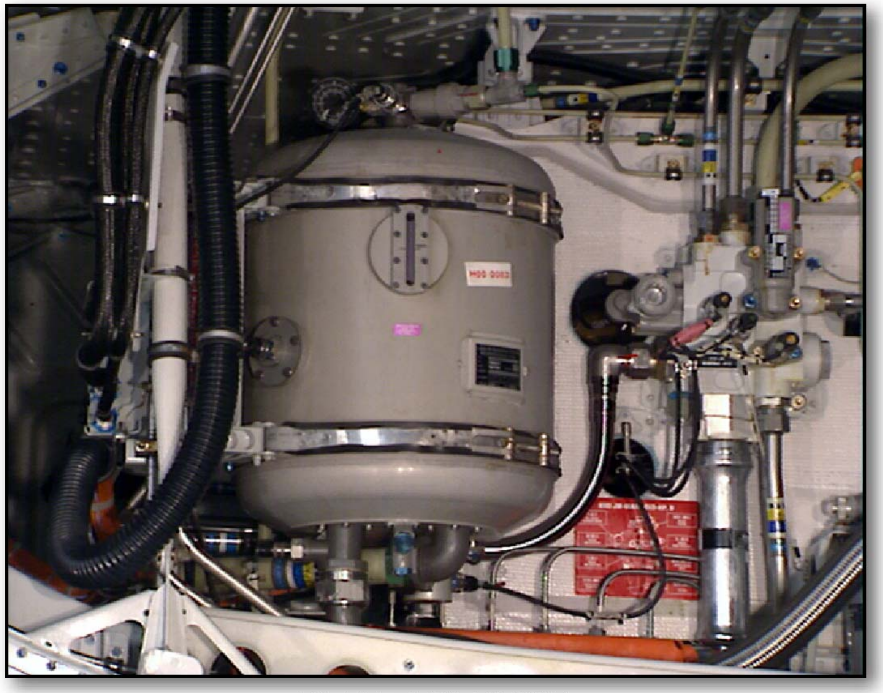

BLUE RESERVOIR

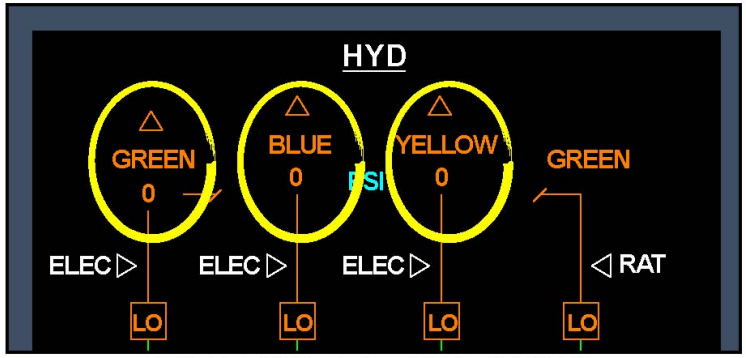

ECAM SYSTEM DISPLAY (SD)

SERVICING - CHECK OF THE RESERVOIR FLUID LEVEL

Aircraft maintenance configuration:

Make sure that the hydraulic systems accumulators and the brake accumulators are pressurized.

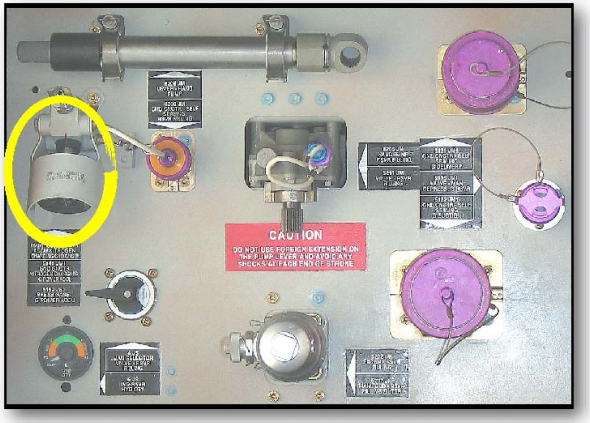

GREEN GROUND SERVICE PANEL

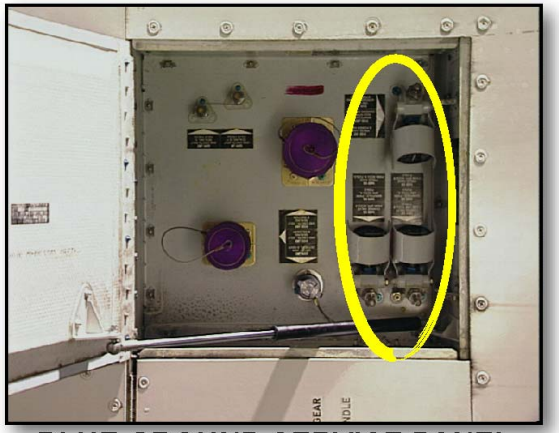

BLUE GROUND SERVICE PANEL

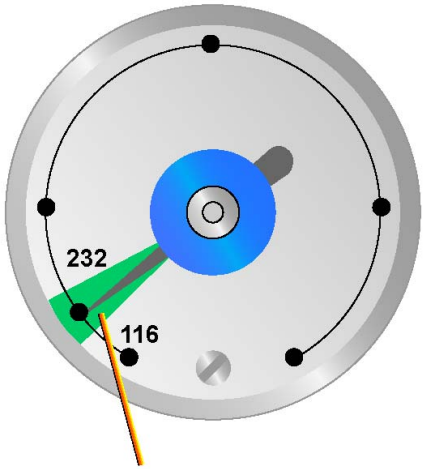

GREEN ZONE

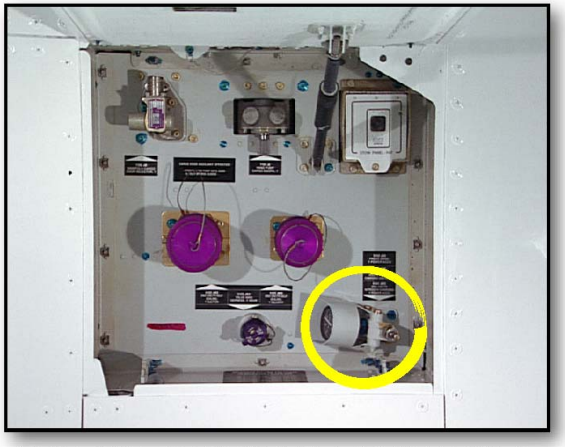

YELLOW GROUND SERVICE PANEL

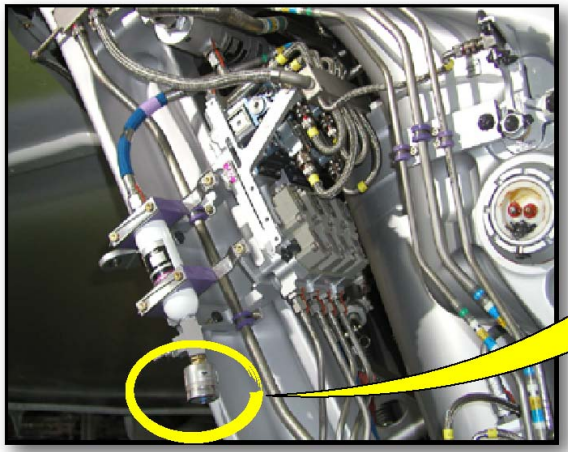

BRAKE RETURN ACCUMULATORS

SERVICING - CHECK OF THE RESERVOIR FLUID LEVEL

Aircraft maintenance configuration:

Make sure that the reservoirs of the Green,Blue and Yellow hydraulic systems are pressurized.

AIR PRESSURE MANIFOLD: 50 psi

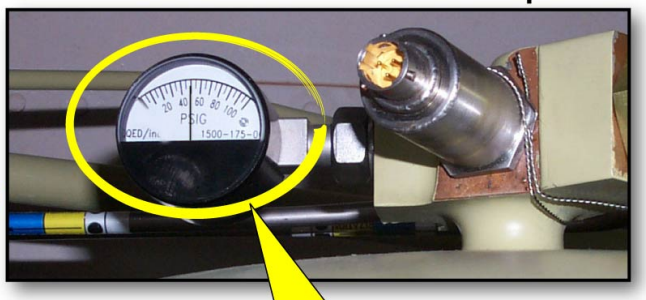

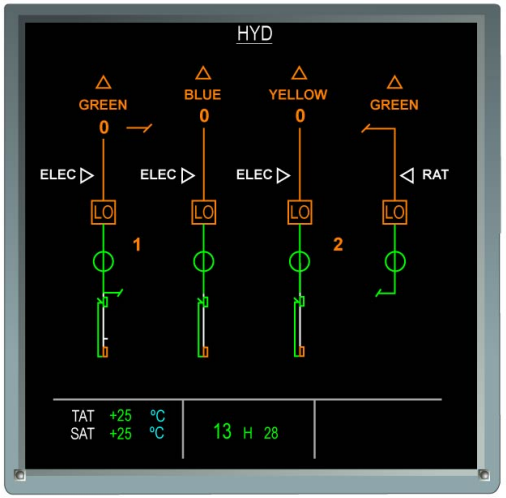

ECAM SD

HYDRAULIC TANK

AIR PRESSURE GAUGE

SERVICING - CHECK OF THE RESERVOIR FLUID LEVEL

Check of the fluid level on the Green-Ground Service Panel:

ACTION	RESULT
On the Green ground panel set the reservoir filling manual selector valve to the BLUE position.	On the hydraulic reservoir filling correction indicator, make sure that the fluid level pointer is in the green area.

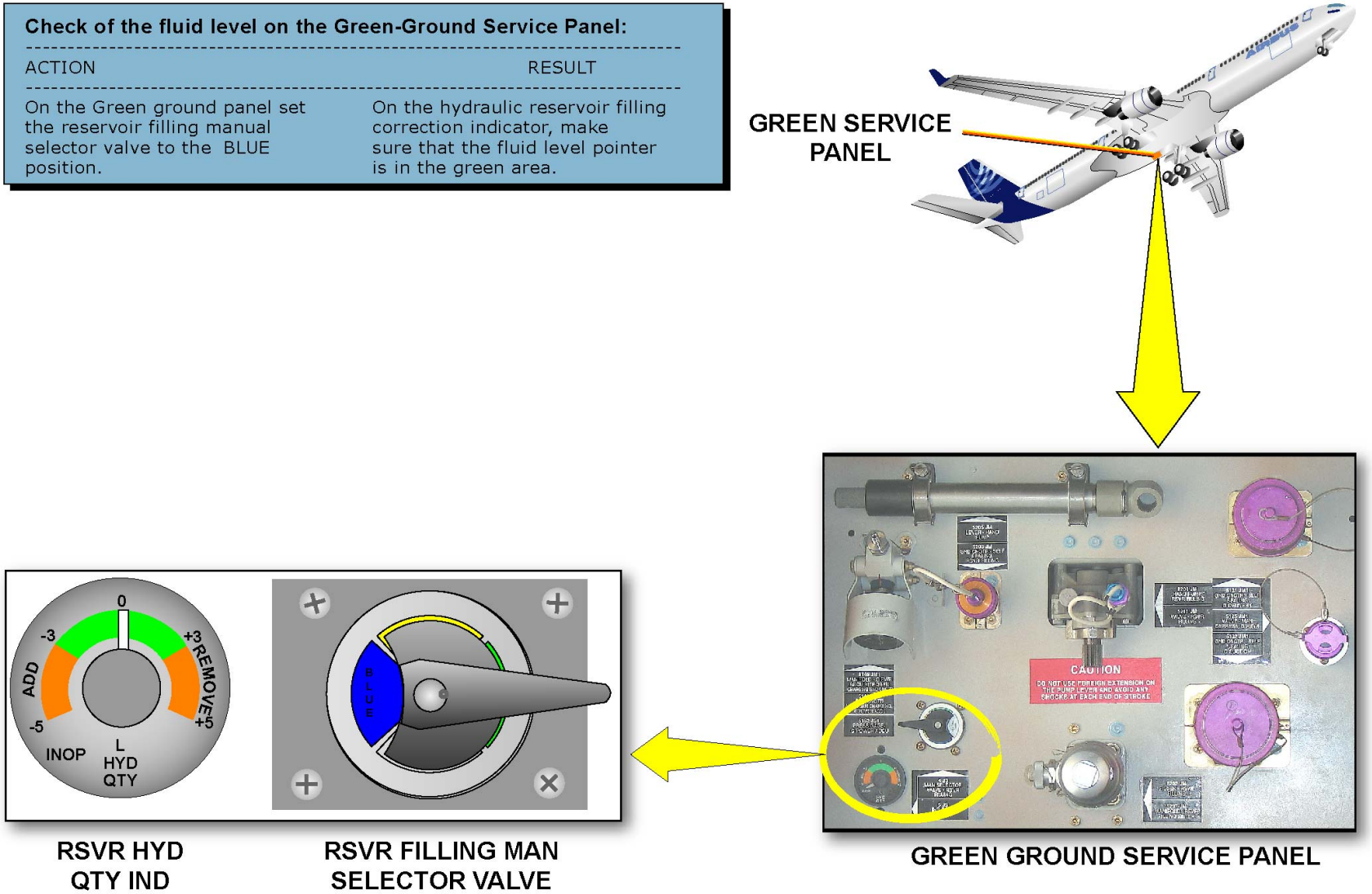

SERVICING - CHECK OF THE RESERVOIR FLUID LEVEL

Check of the fluid level on the ECAM control panel

ACTION	RESULT
On the ECAM control panel,	on the SD,the HYD page appeared. On the SD: -make sure that the low level indications (in amber)are not shown for the Green, Blue and Yellow hydraulic systems. -make sure that the fluid level indexes are green.

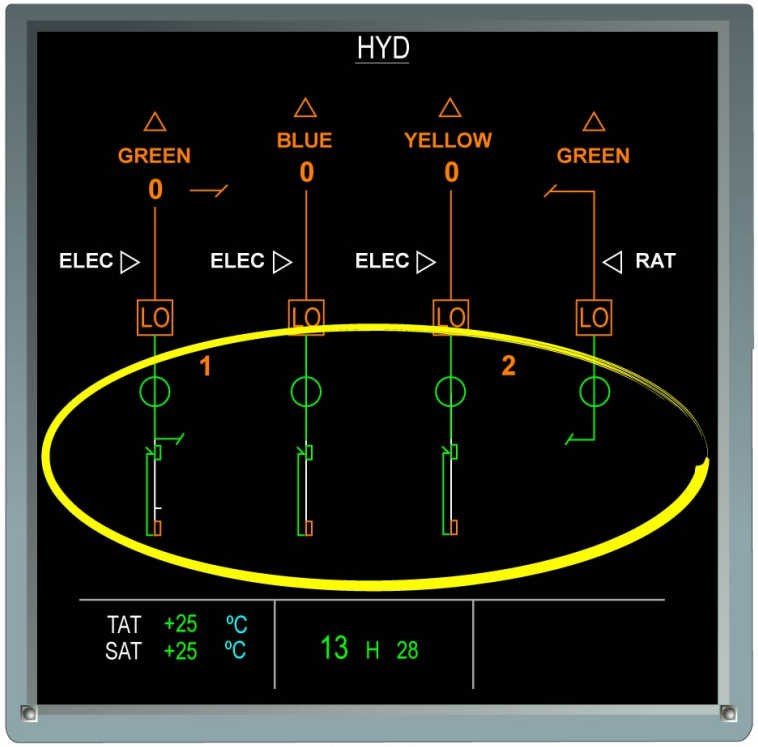

ECAM SD

SERVICING - CHECK OF THE RESERVOIR FLUID LEVEL

HYDRAULIC SYSTEM LINE MAINTENANCE BRIEFING (2)

SERVICING (continued)

BLEEDING UPSTREAM OF THE ENG PUMP

Loosen the nut of the case drain hose at the engine pump until air-free fluid is obtained, then re-torque to the correct value.

G7508471 - G3NT1T0 - FM29B100000003

Bleeding Upstream of the Engine Pump:

Loosen the nut of the case drain hose until airfree fluid is obtained.

CASE DRAIN CONNECTION

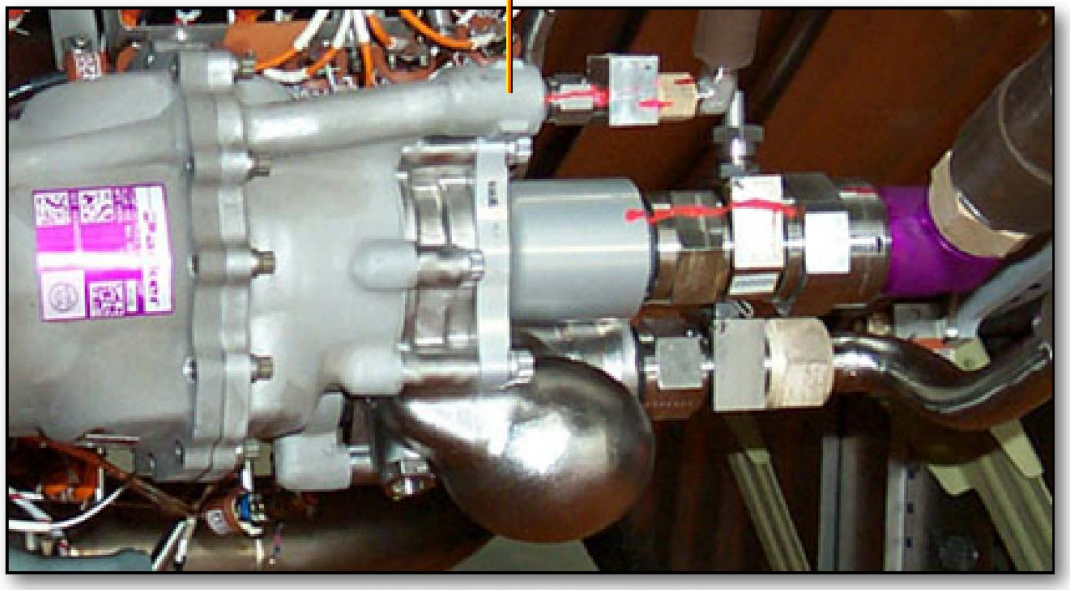

ENGINE-DRIVEN PUMP

SERVICING - BLEEDING UPSTREAM OF THE ENG PUMP

HYDRAULIC SYSTEM LINE MAINTENANCE BRIEFING (2)

SERVICING (continued)

BLEEDING UPSTREAM OF THE ELECTRIC PUMP

Loosen the nut of the case drain hose at the electric pump until air-free fluid flows, then re-torque to the correct value.

G7508471 - G3NT1T0 - FM29B100000003

Bleeding Upstream of the Electric Pump:

Loosen the nut of the case drain hose until airfree fluid is obtained.

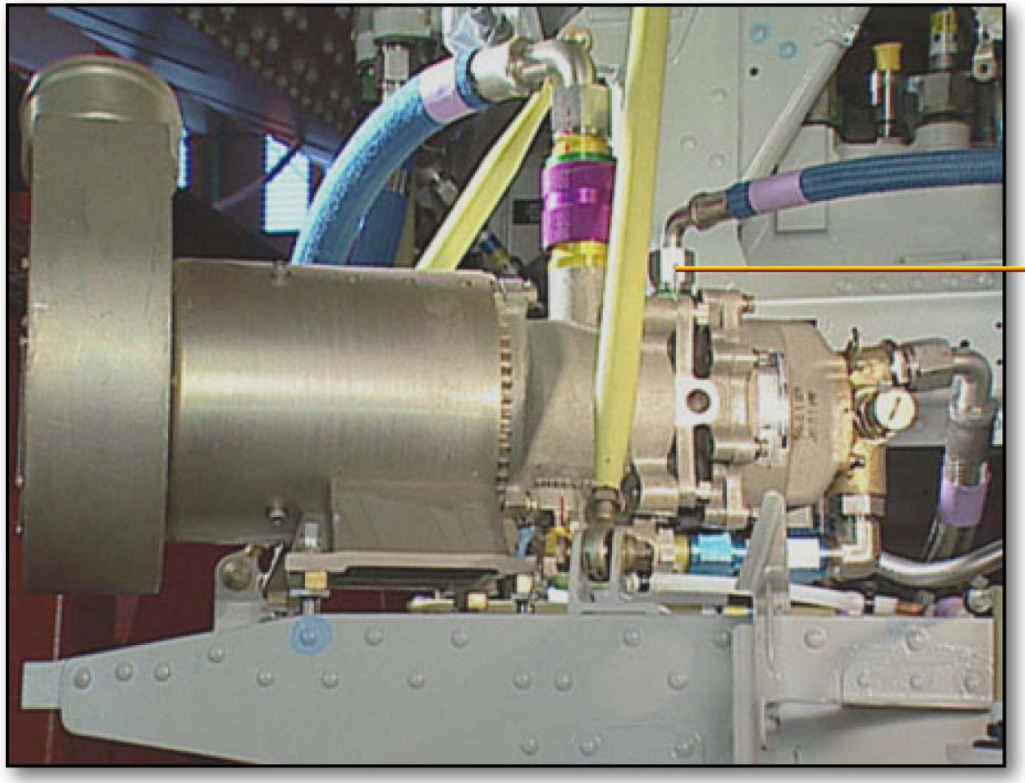

ELECTRIC PUMP

SERVICING - BLEEDING UPSTREAM OF THE ELECTRIC PUMP

G7508471 - G3NT1T0 - FM29B100000003

HYDRAULIC SYSTEM LINE MAINTENANCE BRIEFING (2)

SERVICING (continued)

BLEEDING DOWNSTREAM OF THE ENGINE PUMP

To do the bleeding operation downstream of the engine pumps, the system is pressurized by running the related engine.
Cycling the flight controls lets air in the system be moved back into the reservoir air space.
Before stopping the engines, operate the parking brake system for the blue system.
For the green system, do an operational test of the L/G doors.
For the green system, bleed the normal brake system. For the blue system, bleed the alternate brake system.
For the yellow system, bleed the cargo door actuator system. This procedure is valid for the FWD and aft cargo door actuators.

CAUTION: Do not open the cargo door more than 90 degrees when you operate the door for the bleeding yellow system. If a large amount of trapped air is present in the actuator, the door could fall.

Open and close the cargo doors at least 10 times.

G7508471 - G3NT1T0 - FM29B100000003

Bleeding Downstream of the Engine Pump:

Start the related engine.

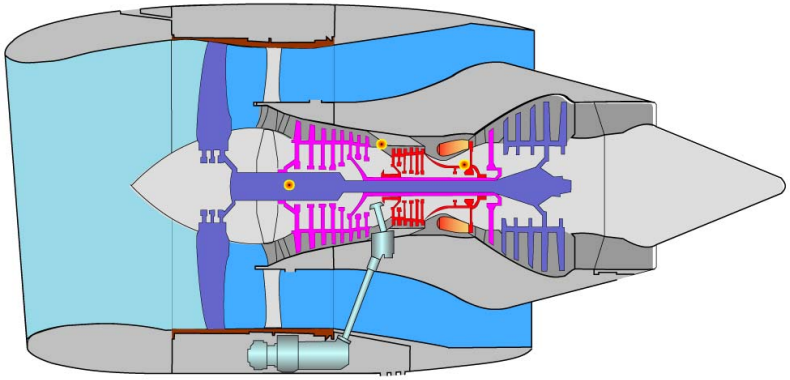

ENGINES RUNNING

Pressurized hydraulic systems.

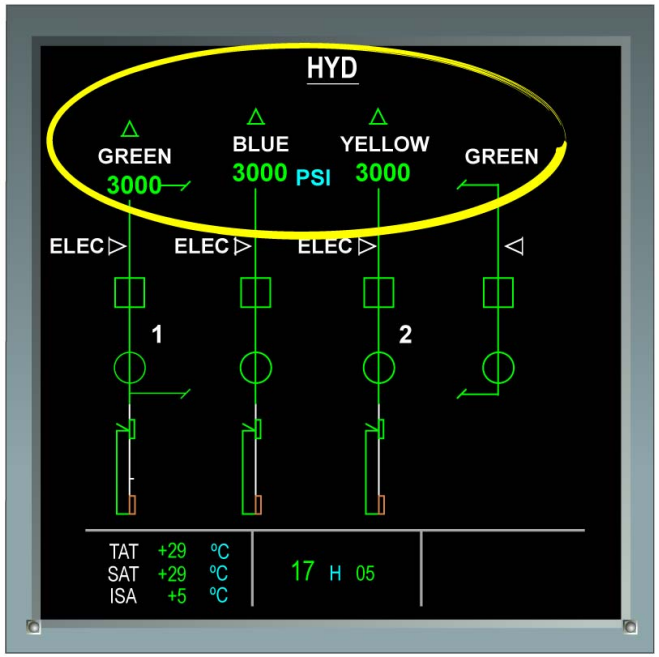

ECAM SD

SERVICING - BLEEDING DOWNSTREAM OF THE ENGINE PUMP

Bleeding Downstream of the Engine Pump:

Cycling the flight controls.

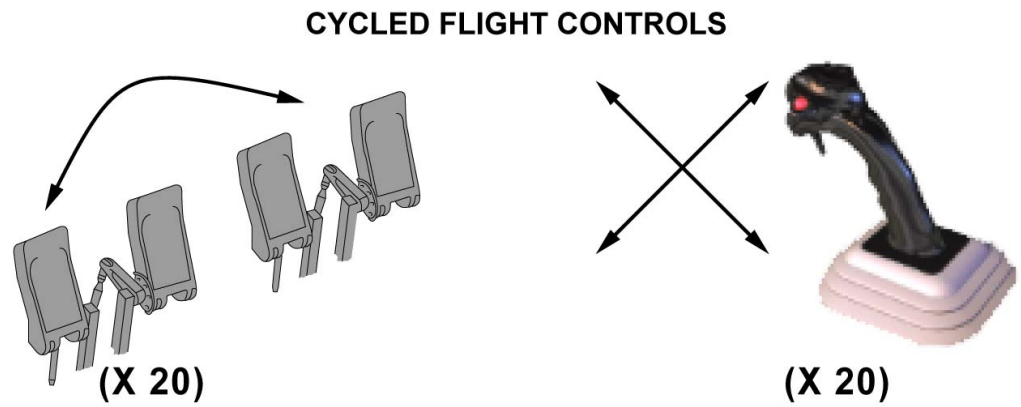

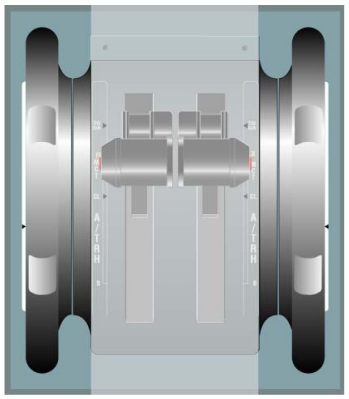

THS FULL NOSE UP TO FULL NOSE DOWN

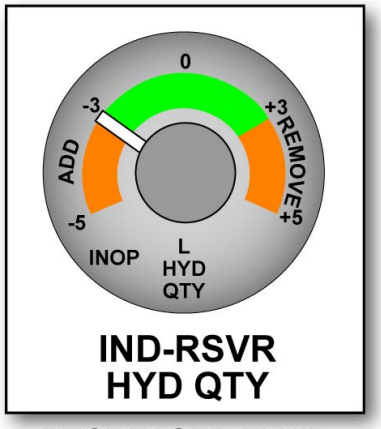

DECREASED FLUID LEVEL

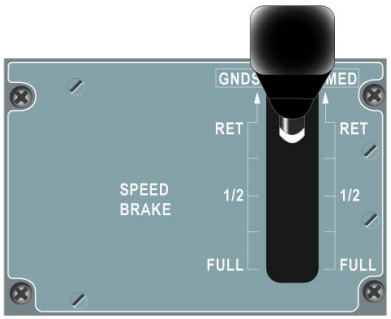

EXTENSION & RETRACTION OF THE SPOILERS

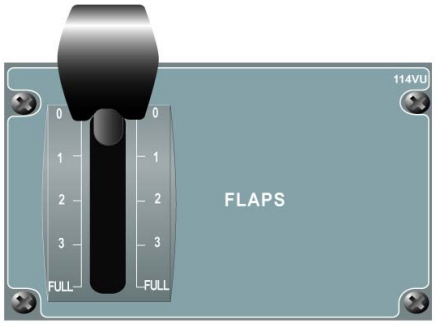

SLAT & FLAP EXTENSION (X 5)

SERVICING - BLEEDING DOWNSTREAM OF THE ENGINE PUMP

Bleeding Downstream of the Engine Pump:

Stop the related engine (Operate also the parking brake for the blue system).

Before stopping the engines, operate the parking brake.

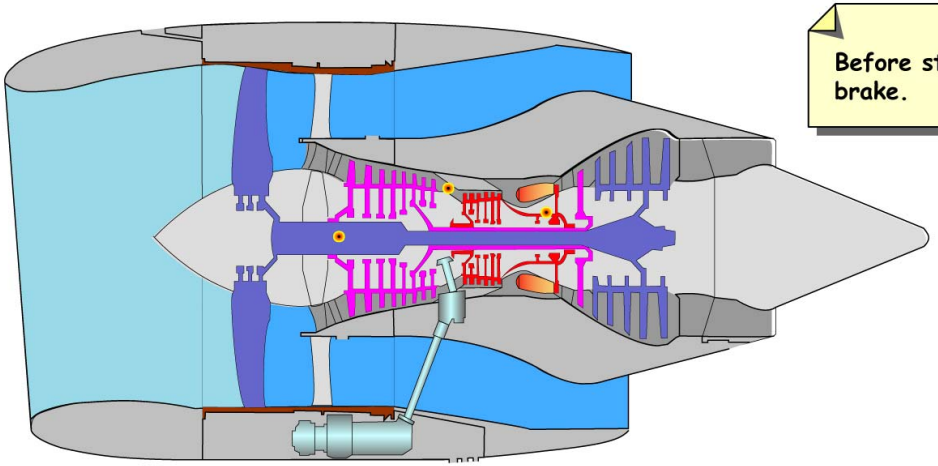

ENGINES STOPPED

Depressurized hydraulic systems.

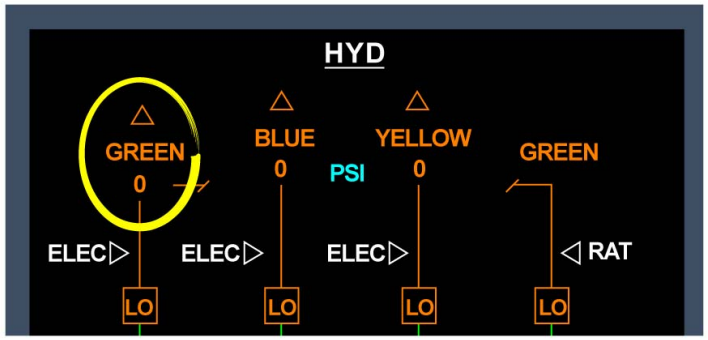

ECAM SD

SERVICING - BLEEDING DOWNSTREAM OF THE ENGINE PUMP

Bleeding Downstream of the Engine Pump:

- Do an operational test of the L/G doors. Install the safety devices on the L/Gs. Then put the false targets in position.
- Make sure that the green system is pressurized and select the L/G selector 10 times.

OPERATIONAL TEST OF THE L/G DOORS

1 Safety devices installed on the L/Gs

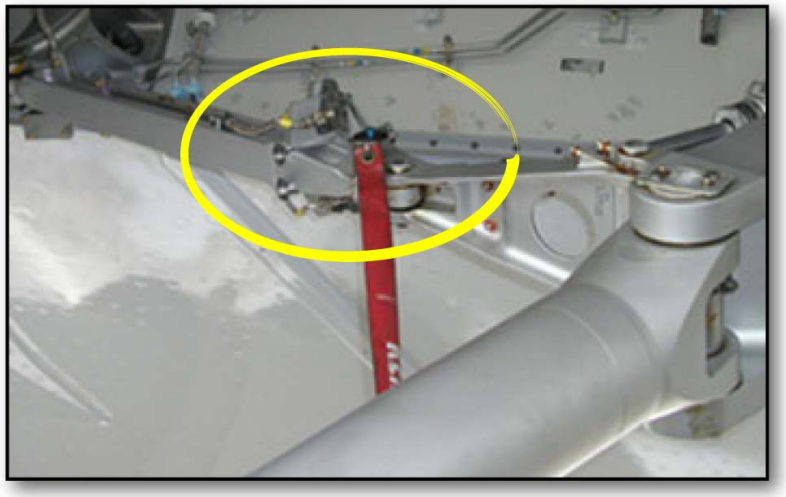

2 Green hyd. pressurized + L/G selector activated (10 times)

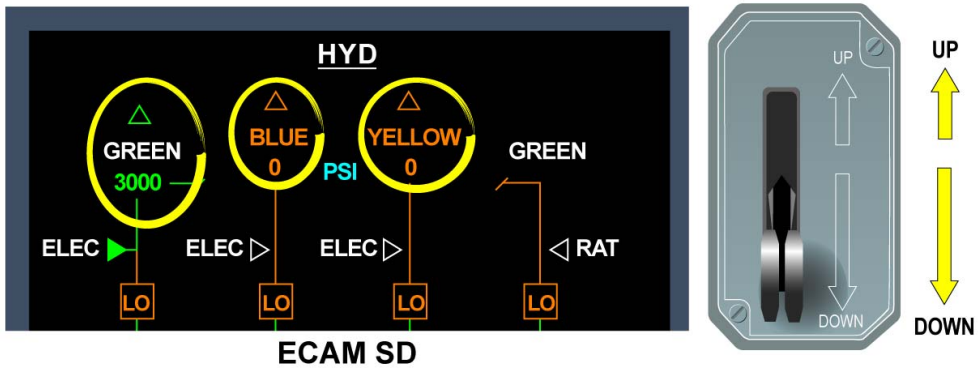

2 False targets installed to simulate flight conditions

SERVICING - BLEEDING DOWNSTREAM OF THE ENGINE PUMP

Bleeding Downstream of the Engine Pump:

- For the green system, bleed the normal brake system.
- For the blue system, bleed the alternate brake system.

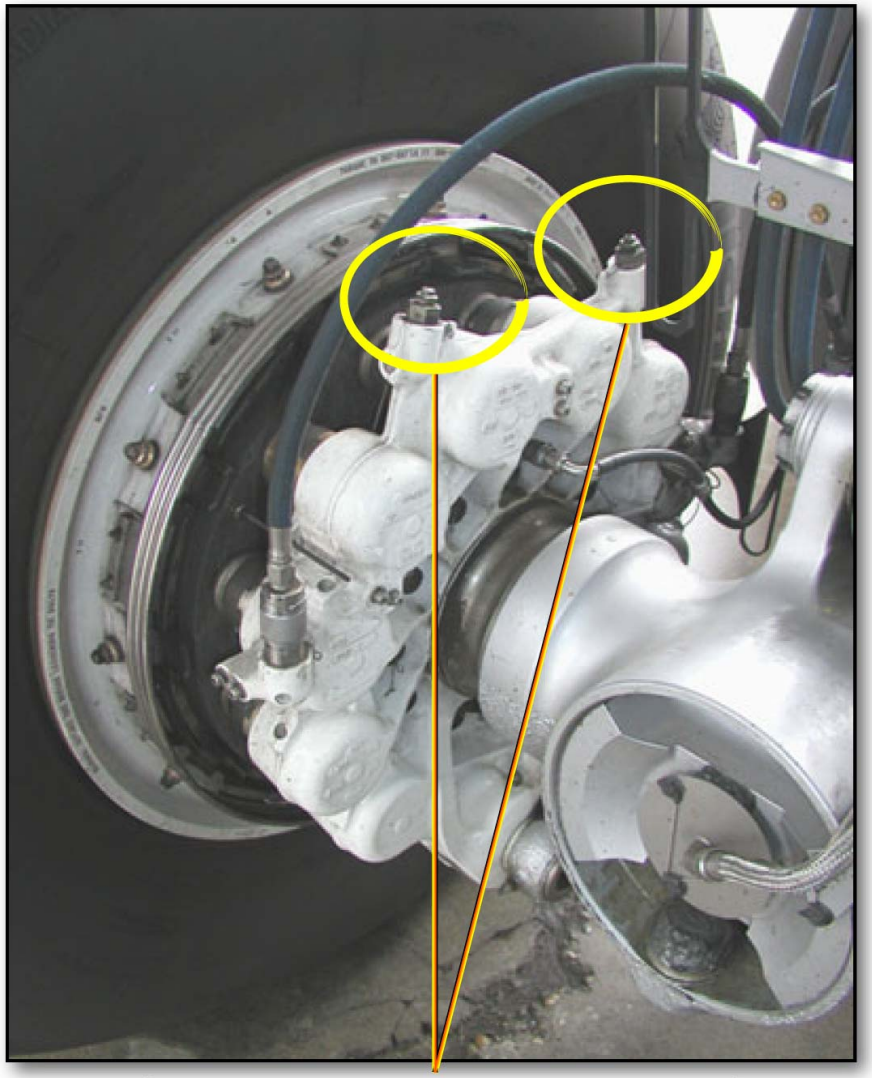

NORMAL AND ALTERNATE BLEED VALVES

SERVICING - BLEEDING DOWNSTREAM OF THE ENGINE PUMP

Bleeding Downstream of the Engine Pump:

Open and close the cargo doors at least 10 times.

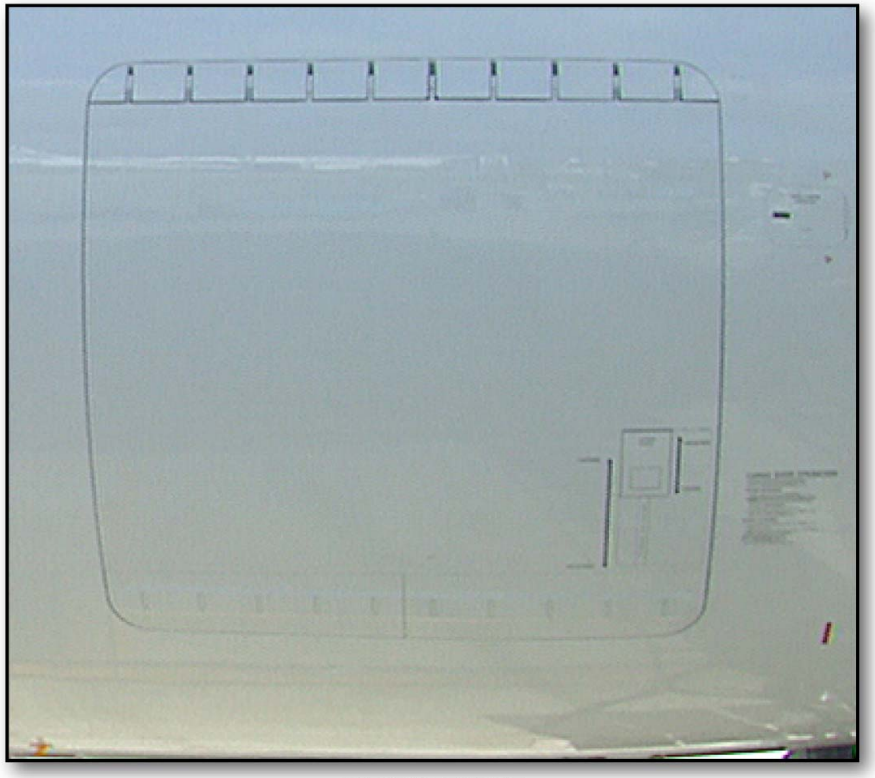

CARGO DOOR

CAUTION

Do not open the cargo door more than 90 degrees when you operate the door to bleed the yellow system.

SERVICING - BLEEDING DOWNSTREAM OF THE ENGINE PUMP

This Page Intentionally Left Blank

G7508471 - G3NT1T0 - FM29B100000003

HYDRAULIC SYSTEM LINE MAINTENANCE BRIEFING (2)

SERVICING (continued)

AIR SYSTEM CHECK

The green system has been chosen as example. Check and adjust if necessary the fluid level of each reservoir.
Do an air system check by recording the fluid level in both pressurized and non-pressurized conditions, using the hydraulic reservoir quantity indicator on the green ground service panel (5 minutes for stabilization between readings).
A movement of the pointer to the right shows an increase of the fluid level in the reservoir because of air expansion in the system. For the green system, if the increase is more than half of the green arc (3l), the bleeding procedure must be repeated. For the blue and yellow systems, if the increase is more than the fourth of the green arc (1.5l), the bleeding procedure must be repeated.

G7508471 - G3NT1T0 - FM29B100000003

Air System Check:

Check and adjust if necessary the fluid level of each reservoir.

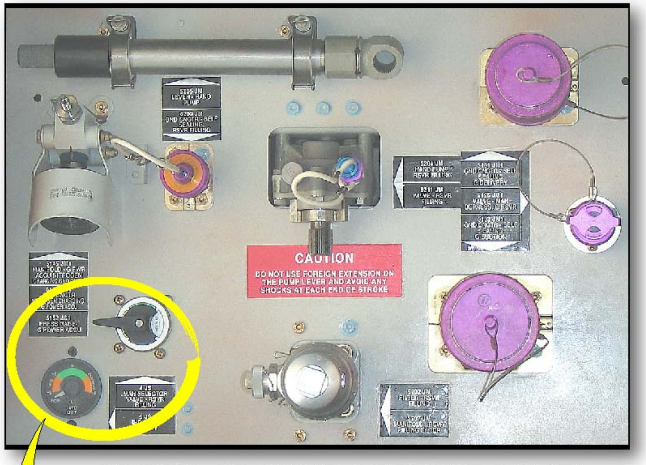

GREEN GROUND SERVICE PANEL

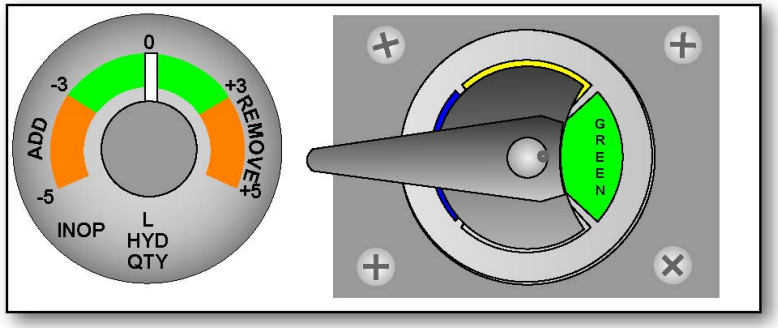

RSVR HYD QTY IND

RSVR FILLING MAN SELECTOR VALVE

SERVICING - AIR SYSTEM CHECK

Air System Check:

Perform an air system check by recording the fluid level in both pressurized and non-pressurized conditions, using the hydraulic reservoir quantity indicator (5 min between readings).

INDICATED AIR PRESSURE:
50 psi

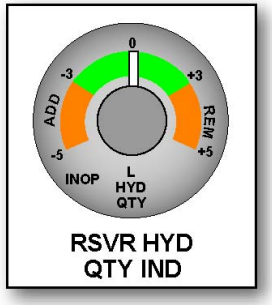

INDICATED AIR PRESSURE:
0 psi

FIVE MINUTES LATER

INDICATED AIR PRESSURE: 0 psi

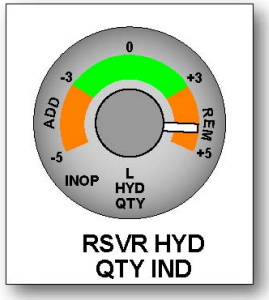

SERVICING - AIR SYSTEM CHECK

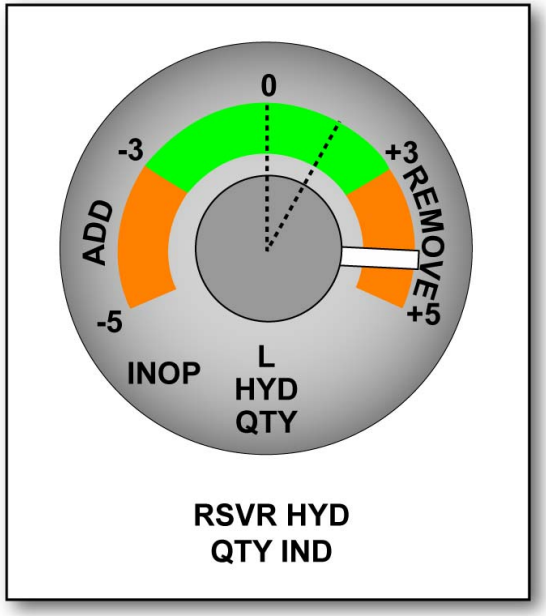

A movement of the pointer to the right shows an increase of the fluid level in the reservoir due to the air expansion in the system.

After bleeding, if the green system increases more than half the green arc (3l), the bleeding procedure must be repeated.

After bleeding, if the blue or yellow system increases more than one of the fourth of the green arc (1.5l), the bleeding procedure must be repeated.

SERVICING - AIR SYSTEM CHECK

HYDRAULIC SYSTEM LINE MAINTENANCE BRIEFING (2)

MAINTENANCE TIPS

TIGHTENING TORQUES

Before you torque a component or connection, obey the precautions and procedures given in the tightening practices for hydraulic connection procedure in the AMM Chapter 20.
The tightening torques are given in the AMM tables chapter 20.
When you use an adapter, the values shown on the dial of the torque wrench is not the applied value .To get the correct value, apply the formula given on the next picture.
The drawing shows as an example the tightening torque for HARRISSON and PERMASWAGE sleeve nuts and in-line-check valves and how to use a torque wrench and adapter.

G7508471 - G3NT1T0 - FM29B100000003

TIGHTENING TORQUES FOR HARISSON AND PERMASWAGE SLEEVE NUTS AND IN-LINE CHECK VALVES

ITEM CODE	OUTER DIA		TIGHTENING TORQUES Minimum And Maximum Values			
			CRES AND TI TUBES		ALLUMINIUM ALLOY	
	In	mm	m daN	lbf in.	m daN	lbf in.
3	3/16	4,76	1,1 1,2	97 106		
4	1/4	6,35	1,5 1,7	133 150	1,2 1,3	106 115
5	5/16	7,93	2,0 2,3	177 204	1,5 1,7	133 150
6	3/8	9,52	2,9 3,2	257 283	1,8 2,0	159 177
8	1/2	12,70	5,4 5,9	478 522	3,0 3,3	266 292
10	5/8	15,87	7,5 8,3	664 735	3,9 4,3	345 38[illegible]
12	3/4	19,05	8,5 9,5	752 840	4,8 5,3	425 469
16	1"	25,40	8,5 9,5	752 840	8,1 8,9	717 788
20	1"1/4	31,75	8,5 9,5	752 840	9,7 10,7	859 947
24	1"1/2	38,10	8,5 9,5	752 840	9,7 10,7	859 947

AMM TASK 20-21-12-991-005
AMM TASK 20-21-12-991-006

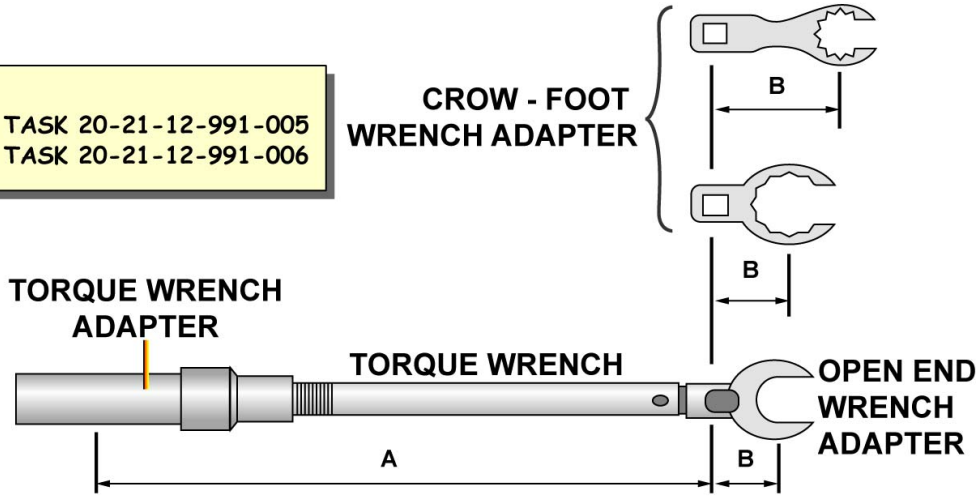

When you use a wrench adapter, you must adjust the torque values.
Use this formula to adjust the torque values:

$$T' = \frac{T \times A}{A + B} = \frac{2 \times 300}{300+100} = \frac{600}{400} = 1.5 \text{ m.daN}$$

T'= New torque values (adjusted) to be set on the torque wrench.
T= Specified torque value (applied on the connection).

Example:
Specified torque (T) = 2 m.daN (117 lb.in)
Lenght of torque wrench (A)
Without adapter = 300 mm (11.8 in.)
Lenght of adapter = 100 mm (3.9 in.)

If one of the constituents is made out of aluminum (Thread or nut). Apply the aluminum alloy values.

MAINTENANCE TIPS - TIGHTENING TORQUES

G7508471 - G3NT1T0 - FM29B100000003

HYDRAULIC SYSTEM LINE MAINTENANCE BRIEFING (2)

MAINTENANCE TIPS (continued)

EXTERNAL LEAK TEST OF COMPONENTS

A leak is the quantity of fluid that comes out of a component and that is sufficient to become a drop or drops, or will possibly become a drop of approximately 20 drops =1 cc, and 75600 drops =1 gallon.
A leakage is a quantity of fluid on the surface of a component that is not sufficient to become a drop.
A stain is an area on the surface of a component that has a different color. It is usually caused when fluid leakage becomes dry on the component surface after a high temperature operation.
For a correct analysis of component leak rates, you must obey the subsequent steps:
- the seal obtained at hydraulic tube connections is obtained on metal-to-metal surfaces. If a leak cannot be stopped by tightening the nut to the specified torque, the joint is probably defective and should be repaired,
- when possible, activate components for some cycles before carrying out the external leakage check,
- dynamic seals are easy to examine for leakage while in the static condition because pistons, slide valves and swivel joints move only during a short time interval. Many components cannot be obviously monitored during operation,
- by following the AMM procedure operate the related component,
- after operation, inspect the component. If there is a sign of any external leakage, compare the quantity of leakage with the values given in the AMM table for specified limits.

G7508471 - G3NT1T0 - FM29B100000003

AMM TASK 29-00-00-790-801

A330 HYDRAULIC SYSTEM EXTERNAL LEAK TEST OF COMPONENTS

EQUIPMENT	NORMAL OPERATION LIMIT	DISPATCH LIMIT TO AVOID DELAY
1 HYDRAULIC PUMP Engine Driven Pump (EDP) Electric Motor Pump Ram Air Turbine (RAT) Power Transfer Unit (PTU)		
Static seals	None	2 drops in 10 minutes
Static casing	1 drop in 10 minutes	1 drop per minute
Shaft seal (in operation)	EDP: 5 drops per min. EMP: 5 drops per min. RAT: 1 drop per min.	EDP: 60 drops per min. EMP: 30 drops per min. RAT: 1 drop per min.

MAINTENANCE TIPS - EXTERNAL LEAK TEST OF COMPONENTS

G7508471 - G3NT1T0 - FM29B100000003

CIRCUIT IDENTIFICATION AND ROUTING (2)

PIPE ROUTING

The three systems are not hydraulically inter-connected. There are no hydraulic pipes in the passenger cabin or flight compartment.

PIPE IDENTIFICATION

Each pipe is identified by a self-adhesive label that indicates:
- its part number,
- a label identifying the pipe as an hydraulic pipe (black dots, yellow and blue fields) its function and the direction of the fluid flow, and
- a label identifying the system, comprising a color code and a number 1, 2 or 3 respectively indicating the G, B, or Y system.

G7508471 - G3NT1T0 - FM29D6F29AC0201

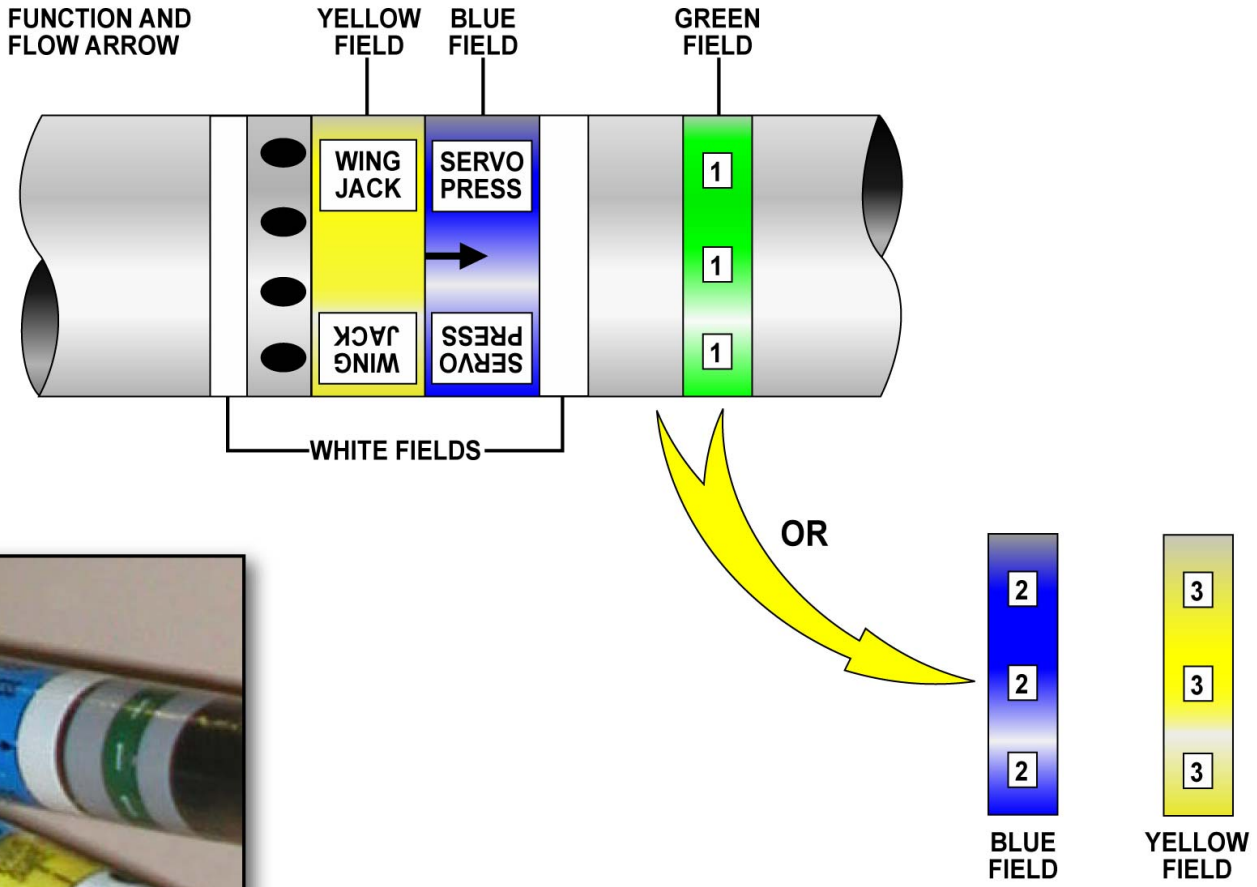

PIPE ROUTING & PIPE IDENTIFICATION

CIRCUIT IDENTIFICATION AND ROUTING (2)

COMPONENT IDENTIFICATION

Each hydraulic component is identified by a placard affixed on the structure near to it, which gives its Functional Item Number (FIN) and its designation.

G7508471 - G3NT1T0 - FM29D6F29AC0201

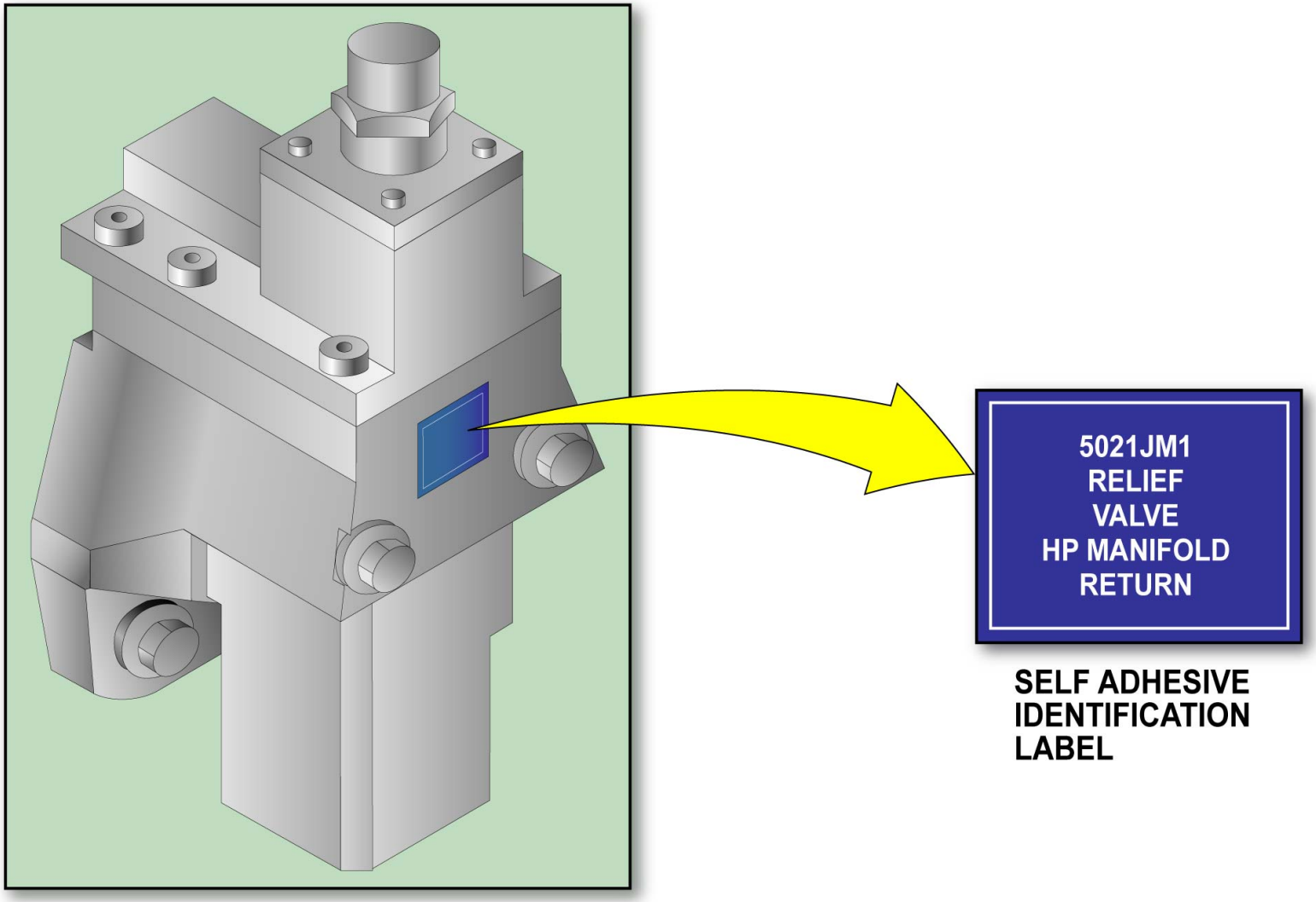

COMPONENT IDENTIFICATION

G7508471 - G3NT1T0 - FM29D6F29AC0201

CIRCUIT IDENTIFICATION AND ROUTING (2)

CONNECTIONS

There are two types of connections:
- permanent connections (permaswage)
- removable connections (standard straight or special fittings).

The manifolds have bobbin type connections for some components. The bobbins have one square seal in the component side and one o-ring in the manifold side.

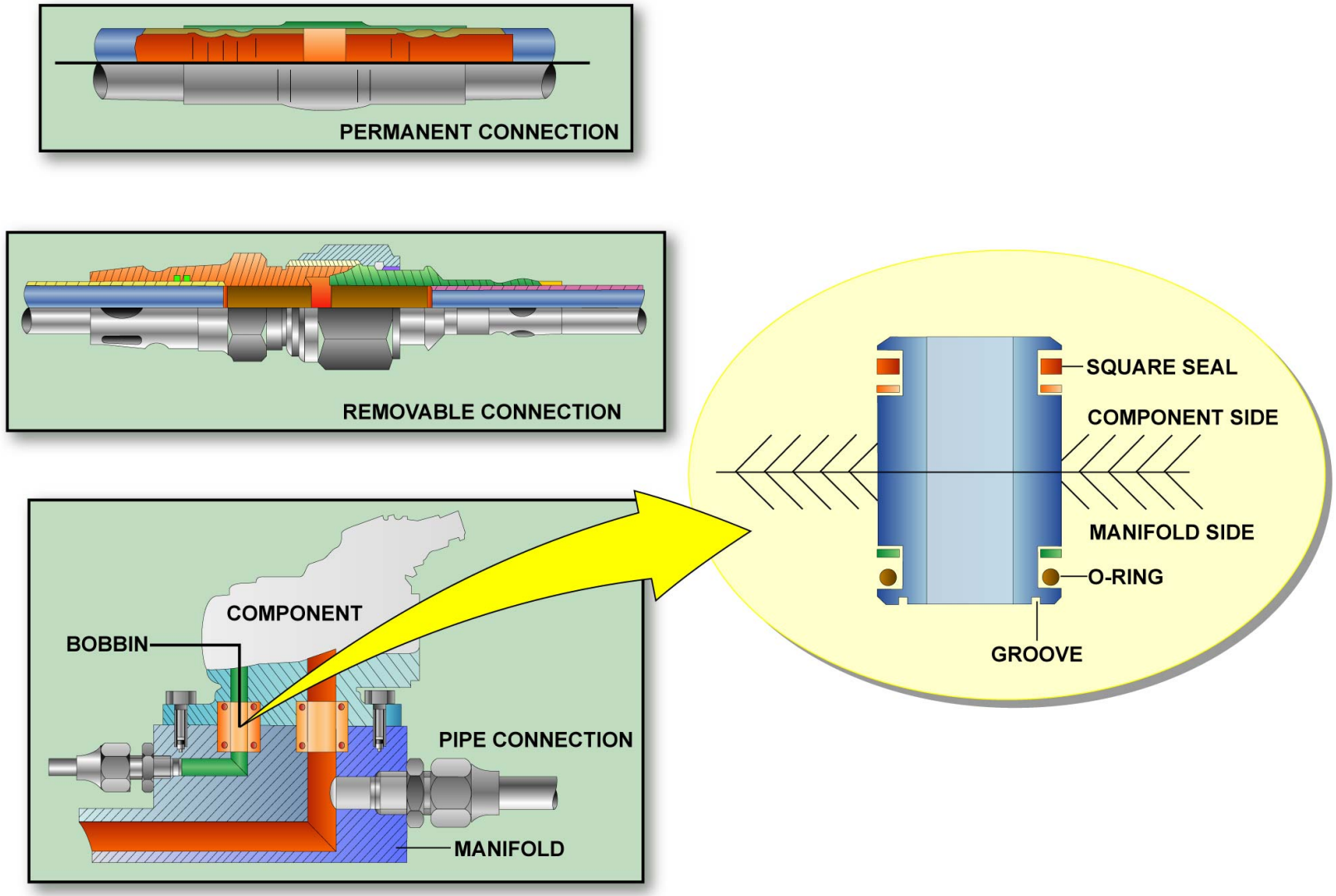

CONNECTIONS

FILLING PRESENTATION (2)

GENERAL

All three reservoirs are filled at the green ground service panel. There are two ground connectors on the service panel, one for the onboard flexible hose and the other one for connection to an external hand pump.

G7508471 - G3NT1T0 - FM29P2000000002

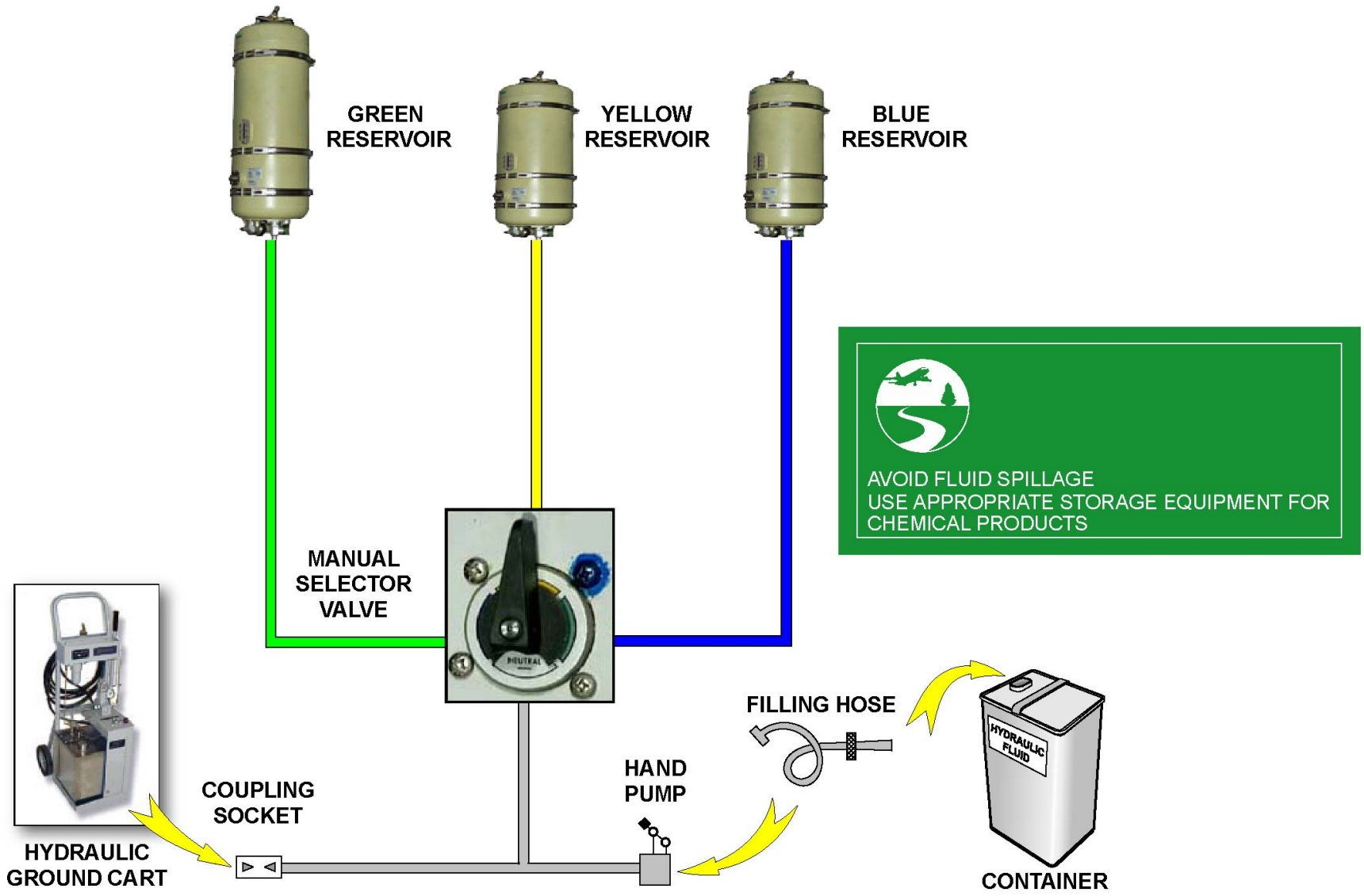

GENERAL

G7508471 - G3NT1T0 - FM29P200000002

FILLING PRESENTATION (2)

SYSTEM PRESENTATION

There are two ground connectors on the service panel, one for the onboard flexible hose and the other one for connection to an external hand pump. This line incorporates a restrictor to prevent overpressure. A filling hose is stowed at the green ground service panel. A filling valve is installed on the hand pump connection which prevents the fluid in the hose from returning in the container.
A double acting hand pump and its handle are located on the green ground service panel.
All fluids will pass through the filling filter before the manual selector valve.
This four-position valve is used to select the reservoir to be filled. It must be returned to neutral when filling is complete.
The supply to each LP manifold is made through the check valves to prevent transfer of fluid.

G7508471 - G3NT1T0 - FM29P2000000002

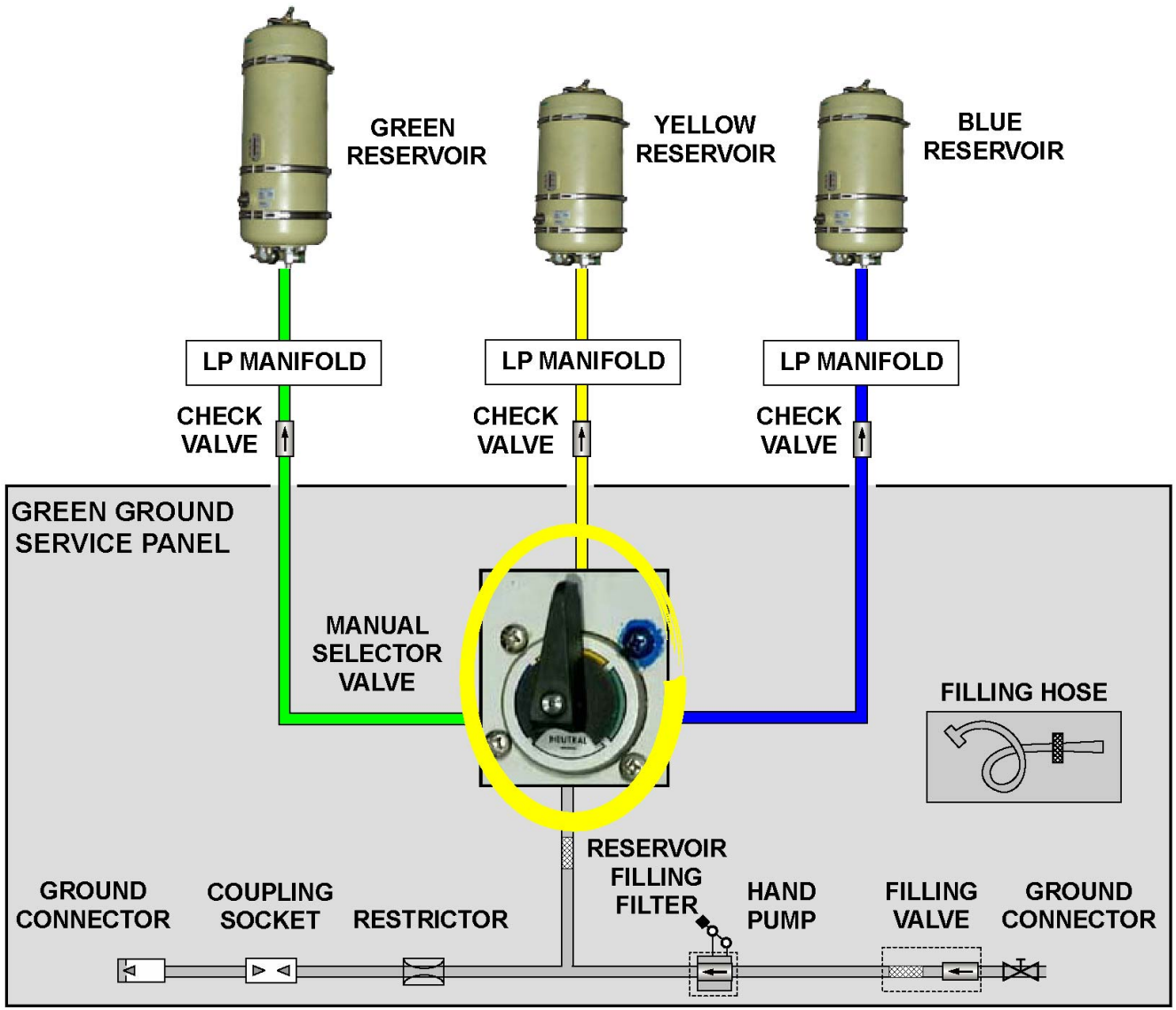

SYSTEM PRESENTATION

G7508471 - G3NT1T0 - FM29P2000000002

FILLING PRESENTATION (2)

INDICATING

The quantity indicator can display low or excess fluid quantity in the selected reservoir, with temperature compensation provided by the HSMU. Filling of the reservoir can also be monitored on the ECAM HYD page. The quantity of fluid can be directly read on the sight glass located on each reservoir.

G7508471 - G3NT1T0 - FM29P2000000002

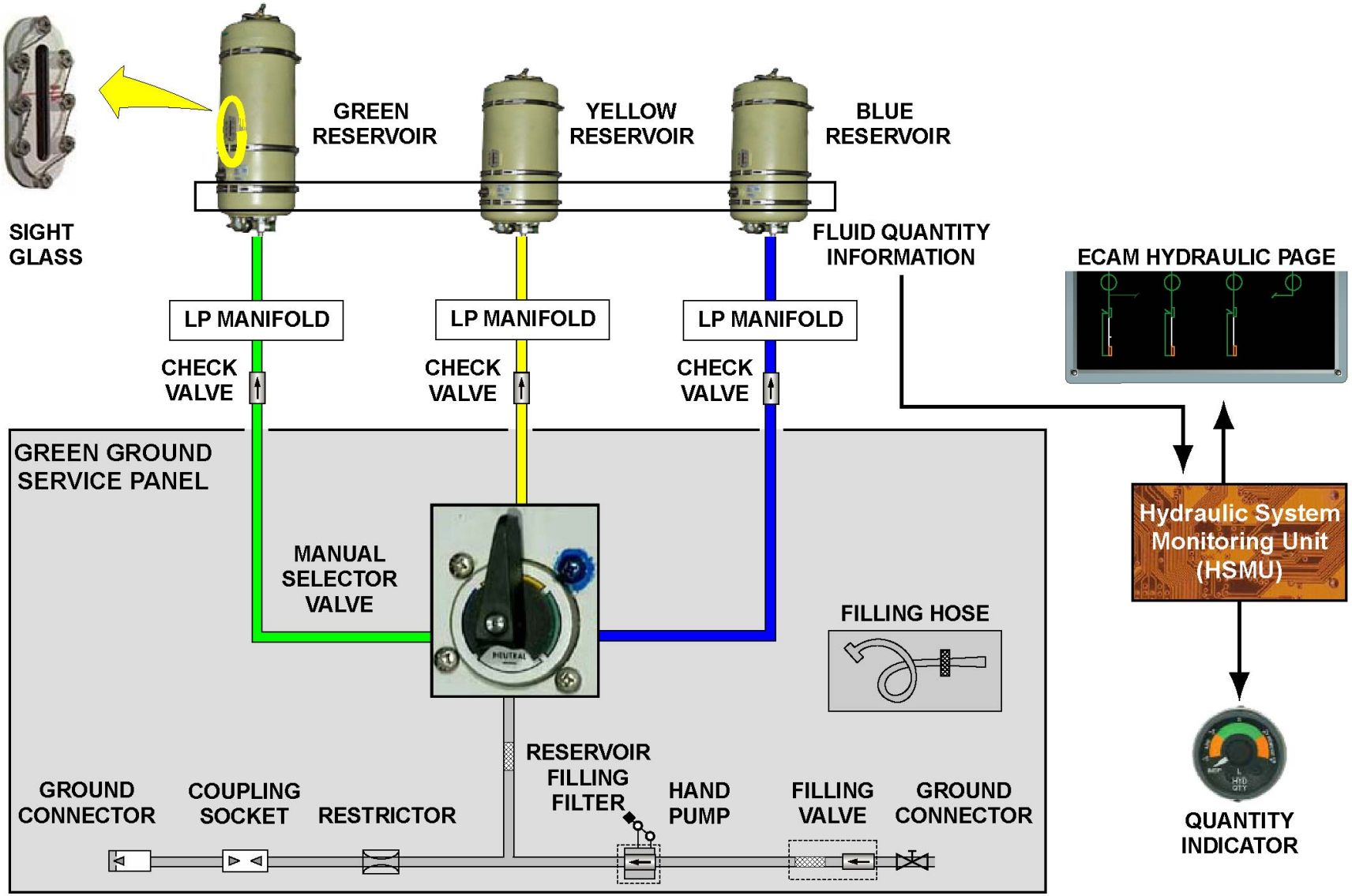

INDICATING

G7508471 - G3NT1T0 - FM29P2000000002

FILLING PRESENTATION (2)

RESERVOIR FILLING VIDEO PRESENTATION

This film presents the servicing procedure to fill up the A 340 green hydraulic reservoir using either a hand pump or a hydraulic servicing cart. Note that the procedure is exactly the same for the A330.
We consider here that the aircraft electrical circuits are energized.
On the avionics compartment panel 721 VU, open, safety and tag the "Hydraulic pump green control" circuit breaker and make sure that the other related circuit breakers are closed.
Make sure that:
- the surfaces are retracted
- the thrust reversers are stowed
- the landing gear is extended and the landing gear doors are closed
- the forward and aft cargo doors are closed.

Make also sure that:
- the Green hydraulic system is depressurized
- the Green hydraulic reservoir is pressurized.
- Now let us start the filling procedure.
- Open the Green ground service panel 197CB. Make sure that the green system accumulator pressure is correct.
- Remove and connect the hand pump lever to the shaft of the reservoir filling hand pump.
- Above the panel, you find the filling hose. Remove its cap.
- Remove the blanking cap of the pump and connect the filling hose to the filling valve. The other end of the filling hose is plunged in a cleaned hydraulic fluid container.
- On the reservoir filling manual selector valve, select the green position.
- Operate the hand pump lever.
- Monitor the increase of fluid level on the reservoir hydraulic quantity indicator.
- Stop the flow when the pointer is in the centre position on the quantity indicator.

CAUTION: if some components are not in their normal position, use common sense during filling, in order to avoid under or over servicing.

- Turn the reservoir filling manual selector valve to the NEUTRAL position.
- Remove the filling hose and install the blanking cap on the hand pump.
- Close the filling valve.
- Put the filling hose back in position on its mount.
- Remove the hand pump lever from the hand pump and put it back in position on the panel.

You can also fill the reservoir by using a hydraulic service cart.
- Remove the blanking cap from the reservoir filling self-sealing connector.
- Connect the hydraulic service cart to the reservoir filling self sealing ground connector.
- On the reservoir filling manual selector valve, select the GREEN position.
- Operate the ground hydraulic service cart.

CAUTION: Pump slowly to prevent a too high flow rate and supply pressure.

- Monitor the increase of fluid level on the reservoir hydraulic quantity indicator.
- Stop when the pointer is in the center position on the quantity indicator.
- Turn the filling manual selector valve to the neutral position.
- Disconnect the ground hydraulic service cart from the reservoir filling self-sealing ground connector and install the blanking cap.
- Once the reservoir has been filled either through the hydraulic service cart or through the hand pump, the close up tasks must be carried out.
- Close the green ground service panel 197CB.
- On the ECAM system display, verify the quantity of fluid in the green hydraulic system.
- Close the relevant circuit breaker and put the aircraft back into service.

G7508471 - G3NT1T0 - FM29P200000002

RESERVOIR FILLING VIDEO PRESENTATION

G7508471 - G3NT1T0 - FM29P2000000002

FILLING PRESENTATION (2)

ENVIRONMENTAL PRECAUTIONS

Do not discharge products such as oil, fuel, solvent, lubricant either in trash bins, soil or into the water network (drains, gutters, rain water, waste water, etc...).
Sort waste fluids and use specific waste disposal containers.
Each product must be stored in an appropriate and specific cabinet or room such as a fire-resistant and sealed cupboard.

G7508471 - G3NT1T0 - FM29P200000002

STORE PRODUCTS IN APPROPRIATE CONTAINER/CUPBOARD/ROOM

SORT WASTE FLUIDS IN CONTAINERS

AVOID FLUID SPILLAGE
USE APPROPRIATE STORAGE EQUIPMENT FOR CHEMICAL PRODUCTS

FLUID SPILL CLEANUP KIT

USE SPECIFIC WASTE DISPOSAL CONTAINERS

ENVIRONMENTAL PRECAUTIONS

PRESSURIZATION PRESENTATION (2)

GENERAL

Each reservoir is pressurized by air regulated to 50 psi to prevent cavitation of the pumps. An air pressure gage, installed on each reservoir, gives the relative pressure in the reservoir.

G7508471 - G3NT1T0 - FM29P300000002

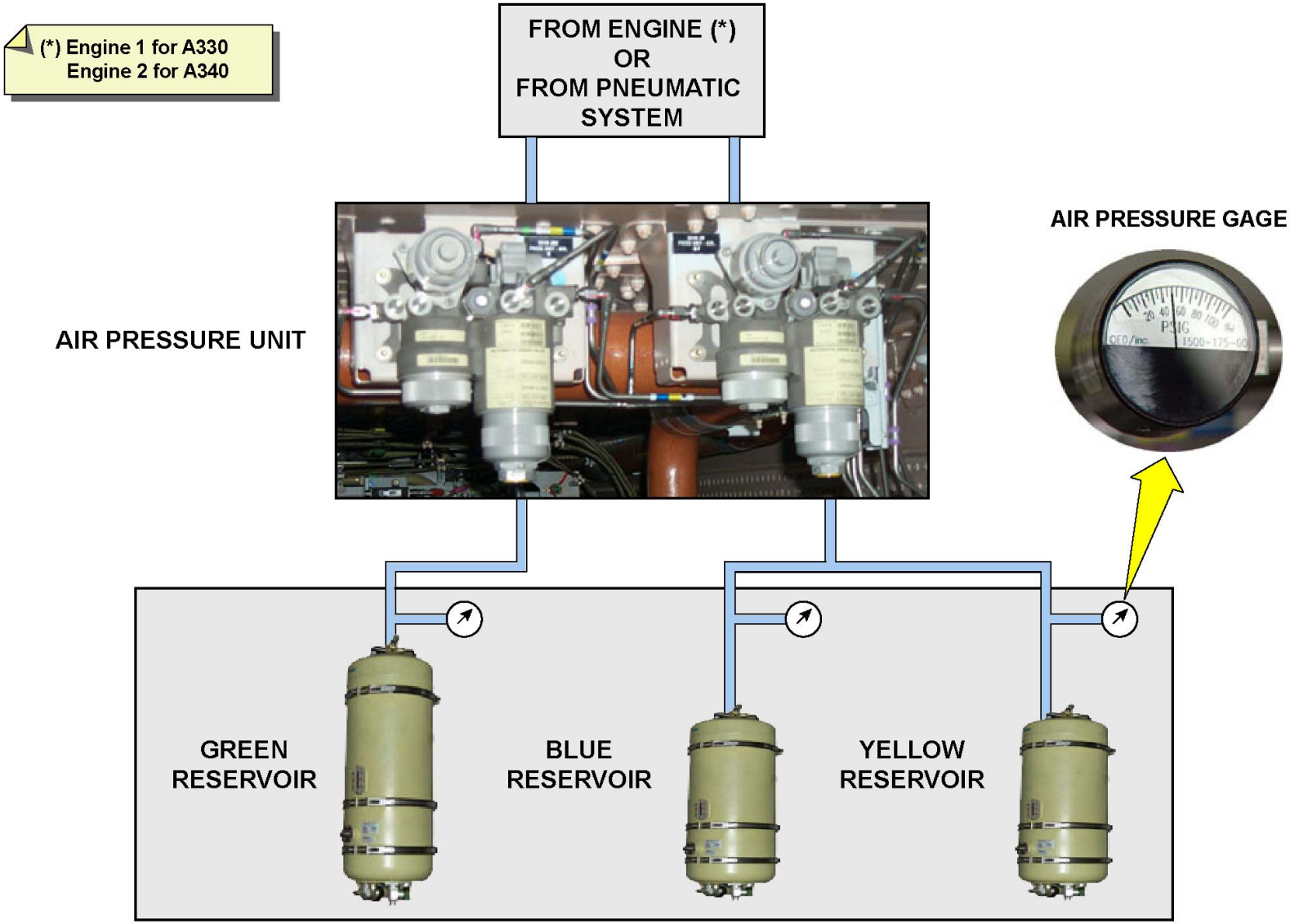
(*) Engine 1 for A330
Engine 2 for A340
FROM ENGINE (*)
OR
FROM PNEUMATIC
SYSTEM
AIR PRESSURE GAGE
AIR PRESSURE UNIT
GREEN
RESERVOIR
BLUE
RESERVOIR
YELLOW
RESERVOIR

GENERAL

PRESSURIZATION PRESENTATION (2)

SOURCES

The normal pressurization source is from engine 1 for A330 or engine 2 for A340 but air can also be taken from the pneumatic system. Ground connections for pressurization are also on the blue service panel. The supply from ENG 1 for A330 or ENG 2 for A340 passes through a filter and a restrictor located in the engine pylon. The restrictor limits the airflow to the pressurization unit in case of a rupture of the pressurizing line in the wing or the fuselage. The bleed air supply is taken through a manifold which includes two airflow-limiting restrictors.

AIR PRESS UNIT

There are two air pressure units, one for the green reservoir and the other for the blue and yellow reservoirs. Each air pressure unit has two check valves to prevent back flow into the pressure sources. The bleed air supply inlet has relief valves set to 75 psi. Each air pressure unit has a fluid separator with an automatic drain valve. The filter is located between the fluid separator and the pressure reducing valve. Each pressure-reducing valve reduces and regulates the air pressure to 50 psi. A depressurizing valve relieves the air pressure inside the unit to enable the automatic drain valve to operate.

RESERVOIR CHECK VALVES

The supply to each reservoir is through a check valve, which will ensure that reservoir pressurization will be maintained up to 12 hours following a failure in the supply.

RESERVOIR MANIFOLD

An air pressure gage installed on each reservoir gives a direct reading of the reservoir pressure. The relief valve operates at 77 psi. Air is dumped overboard, and any fluid will pass into the seal drain system. The pressure switch operates at a falling pressure of 22 psi by sending a signal to the Hydraulic System Monitoring Unit (HSMU). It also gives a cockpit caution via the System Data Acquisition Computer (SDAC).

MANUAL DEPRESSURIZATION VALVE

Each reservoir manual depressurization valve is located on the associated service panel, and is operated manually.

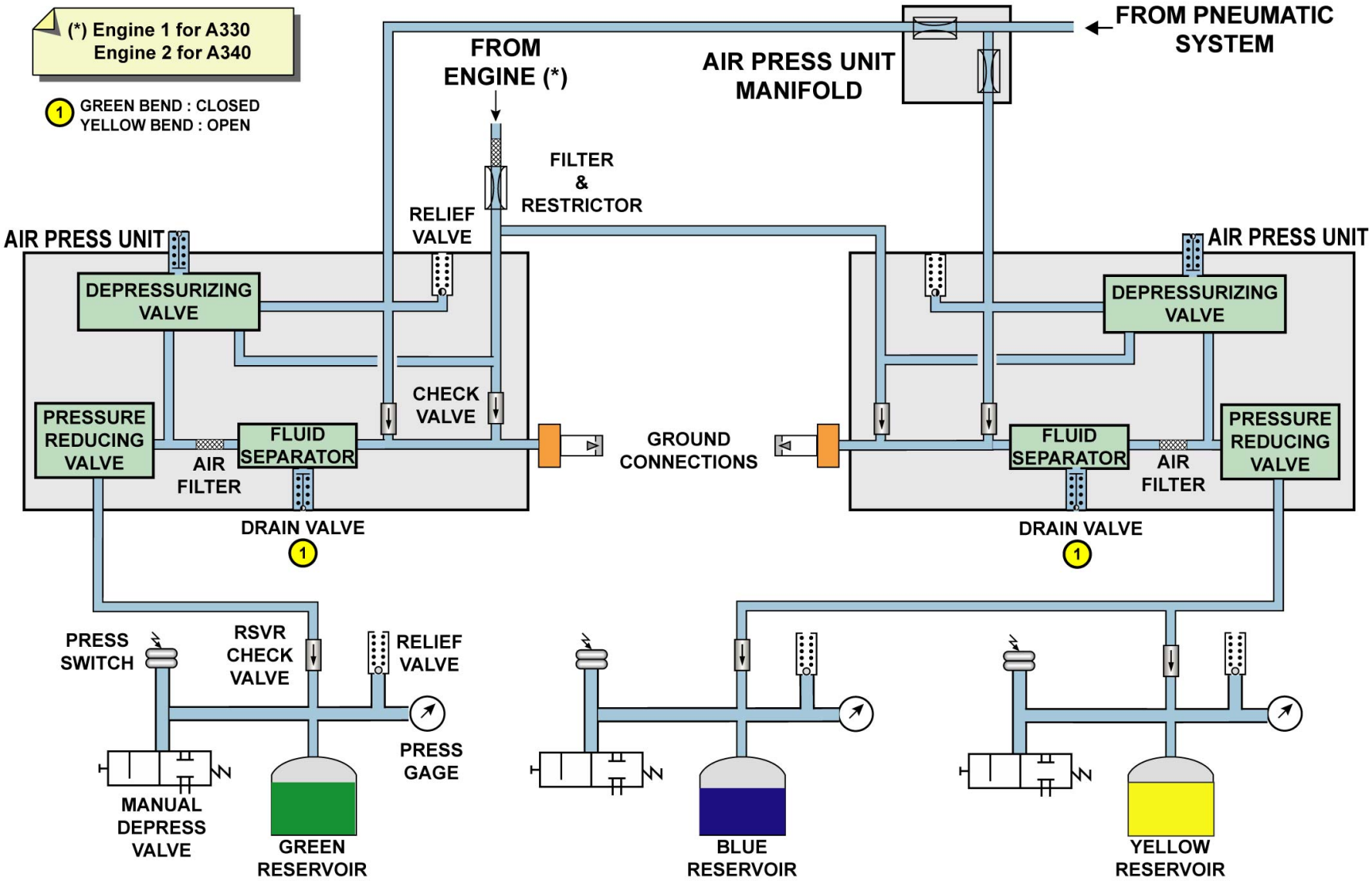

SOURCES ... MANUAL DEPRESSURIZATION VALVE

G7508471 - G3NT1T0 - FM29P300000002

PRESSURIZATION PRESENTATION (2)

HYD. RESERVOIR DEPRESS/PRESS VIDEO PRESENTATION

This film presents the depressurization and pressurization of hydraulic reservoirs. The procedure being the same for the 3 reservoirs, the green one is shown as an example. The same applies for both the A 340 and the A 330.
We consider that the ground service network has been energized.
In the cockpit, make sure that there is no pressure in the BLEED system.
- Make sure that the Green hydraulic system is depressurized and put it in the maintenance configuration.
- Put a warning notice in position on panel 245VU so that nobody can pressurize the related hydraulic system.
- On the avionics compartment panel 721VU, open, safety and tag the green hydraulic pump control circuit breaker.
- Open the left main landing gear door.
- Open the green ground service panel 197CB.

WARNING: Before continuing the procedure, protect your hands and face from the air, which comes out when you open the reservoir manual depressurization valve. There could be a risk of burns from hot gas and contamination from hydraulic fluid.

- On the green ground service panel, turn the cap of the depressurization valve 90 degrees clockwise to the OPEN position.
- Listen to check that all the air is released.
- In the left main landing gear bay, check the depressurization on the green reservoir air pressure gage.

NOTE: A special tool for A300, 310, 320 family, 330 and 340 can also be used. When connected, the corresponding reservoir stays depressurized to prevent accidental re-pressurization.

First depressurize the reservoir using the manual depressurization valve as shown before. Then remove the cap assembly and connect the tool on the valve. Put the other hand of the tool in a container. Leave the tool connected as long as it is necessary. Disconnect it when the maintenance task is completed. Re-install the manual depressurization valve cap assembly. Make sure that the valve is in the CLOSED position. Put the aircraft in the configuration corresponding to the next operation.
The reservoirs will be automatically pressurized when the BLEED system is supplied or by using the charging points located on the BLUE hydraulic service panel.

G7508471 - G3NT1T0 - FM29P300000002

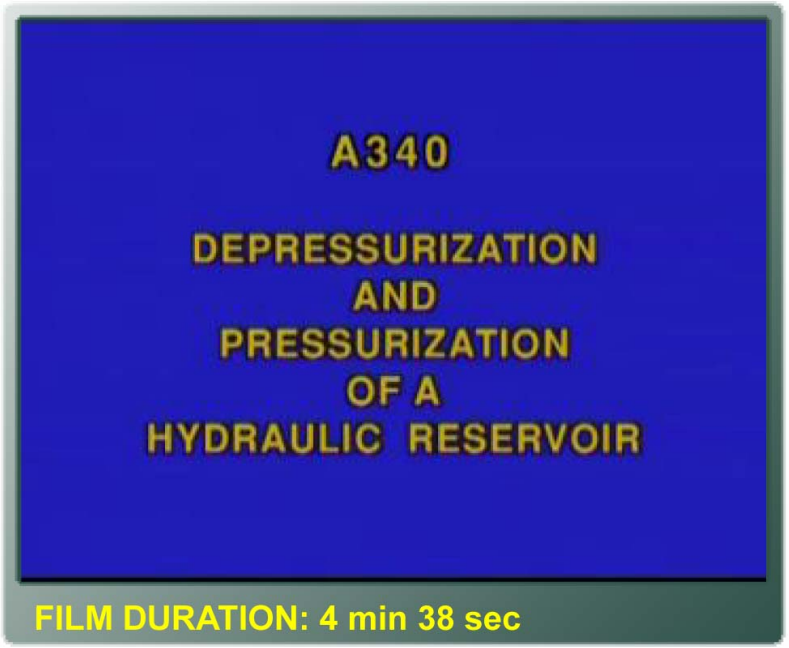

HYD. RESERVOIR DEPRESS/PRESS VIDEO PRESENTATION

G7508471 - G3NT1T0 - FM29P300000002

GREEN HYDRAULIC SYSTEM D/O (3)

SYSTEM DESCRIPTION

The green hydraulic system is pressurized via different components which will be described.

RESERVOIR

The green reservoir supplies hydraulic fluid to the engine pumps, the electric pump and the Ram Air Turbine (RAT). The reservoir is air-pressurized to 50 psi (in flight or ground) in order to avoid cavitation of the hydraulic pumps. It is designed to remain pressurized for at least 12 hours.
Various accessory components are installed on the reservoir. On the top of each reservoir, an air pressure switch monitors the air pressure inside the reservoir. A low level switch is installed on the middle of each reservoir and monitors the fluid quantity to activate a low level caution at 8 l remaining. An analog system, based on capacitive transmitters, permanently monitors the fluid level. A temperature transmitter installed on the return port of the reservoir, sends fluid temperature indications to the Hydraulic System Monitoring Unit (HSMU).

FIRE SHUT OFF VALVE (FSOV)

The Fire Shut Off Valve (FSOV) is composed of a ball valve and electric motor. It is located outside the engine fire zone. The motor section contains limit switches for control and indications.

ENGINE DRIVEN PUMP (EDP)

The two-stage Engine Driven Pump (EDP) is controlled by a solenoid valve. When energized, the pump is set to the depressurized mode. The output of the pump is through an integral pulsation damper.

CASE DRAIN FILTER

Each EDP has a case drain line and filter, which is of the non-bypassing type, with a clogging indicator set to operate at 87 psi.

ELECTRIC PUMP

The two-stage electric pump is controlled by the HSMU. It is monitored for phase unbalance through the Current Unbalance Detection Unit (CUDU) and for overheat conditions.

RAM AIR TURBINE (RAT)

The RAT is an auxiliary pressure source for the green system and is supplied directly from the reservoir. Extension into the airflow is either manually selected or triggered by an automatic function.

GROUND CONNECTORS

For maintenance purposes, ground self-sealing connectors are installed on the service panel.

RETURN FILTER

The LP return filter is of the bypassing type, with a clogging indicator set to operate at 73 psi.

G7508471 - G3NT1T0 - FM29D1000000003

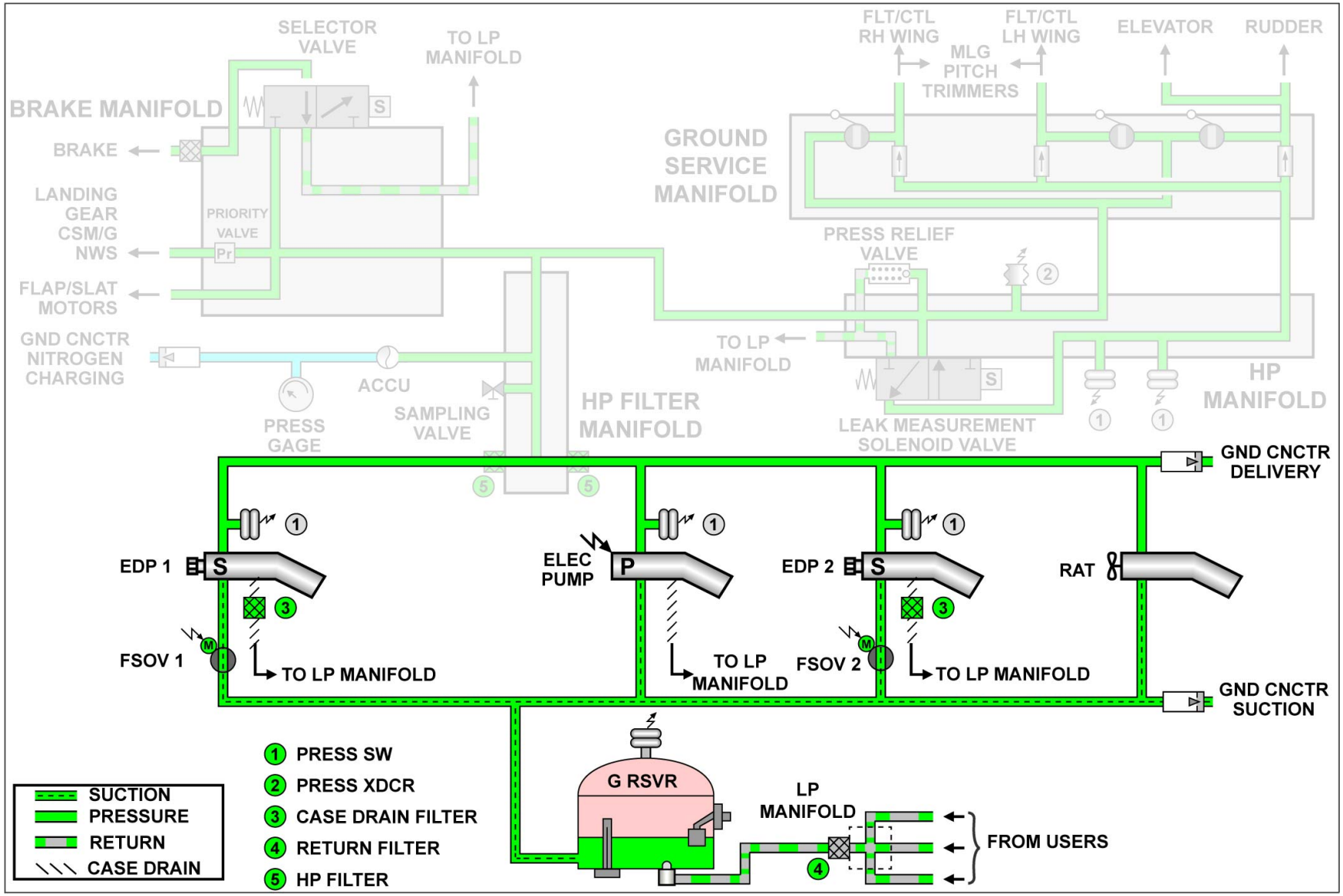

SYSTEM DESCRIPTION - RESERVOIR ... RETURN FILTER

G7508471 - G3NT1T0 - FM29D100000003

GREEN HYDRAULIC SYSTEM D/O (3)

SYSTEM DESCRIPTION (continued)

ACCUMULATOR

The power accumulator damps the pumps delivery pulsations and any pressure surges, and compensates for pump response time in the event of high flow demand. It is installed in vertical position and has two ports: a gas port at the upper end and a fluid port at the lower end. The gas port is connected via a pipe to a nitrogen charging ground connector and to a direct-reading pressure gage, which are installed on the green service panel.

G7508471 - G3NT1T0 - FM29D1000000003

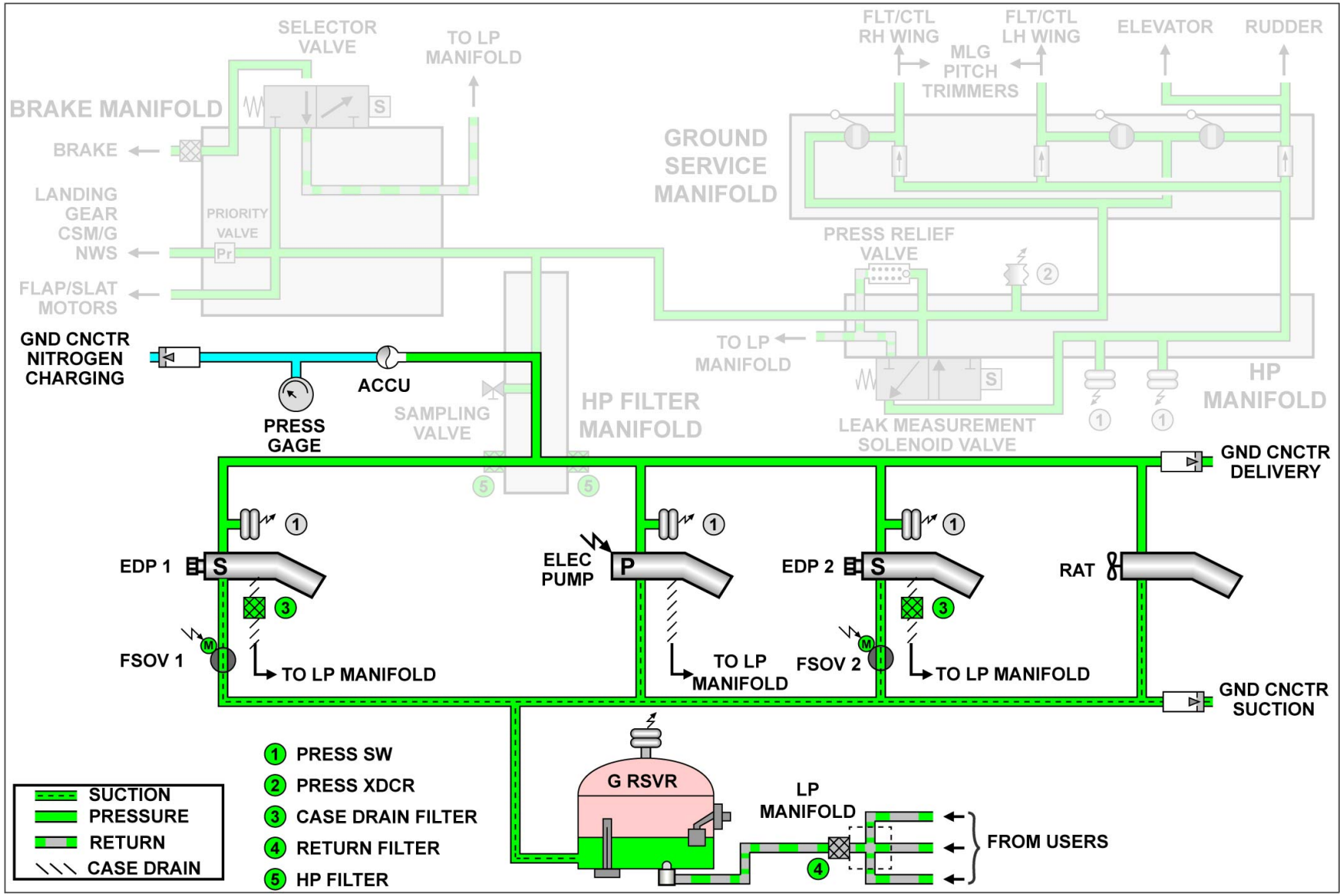

SYSTEM DESCRIPTION - ACCUMULATOR

G7508471 - G3NT1T0 - FM29D100000003

GREEN HYDRAULIC SYSTEM D/O (3)

SYSTEM DESCRIPTION (continued)

HP FILTER MANIFOLD

The High Pressure (HP) filters are of the non-bypassing type, with a clogging indicator set to operate at 87 psi. A clogging indicator is installed on each filter. The sampling valve is used to take samples of hydraulic fluid to monitor for contamination.

CAUTION: When sampling, let the fluid run for a moment into a container, then put 0.2L (0.05USGal) of fluid into an appropriate bottle for analysis.

BRAKE MANIFOLD

The brake manifold supplies the user equipment of the brakes and flap/slat motors. A priority valve can isolate the supply of the landing gear and Constant Speed Motor/Generator (CSM/G) during a possible drop of pressure in the system. The HP filter manifold supplies the user equipment of the landing gear and CSM/G.

G7508471 - G3NT1T0 - FM29D1000000003

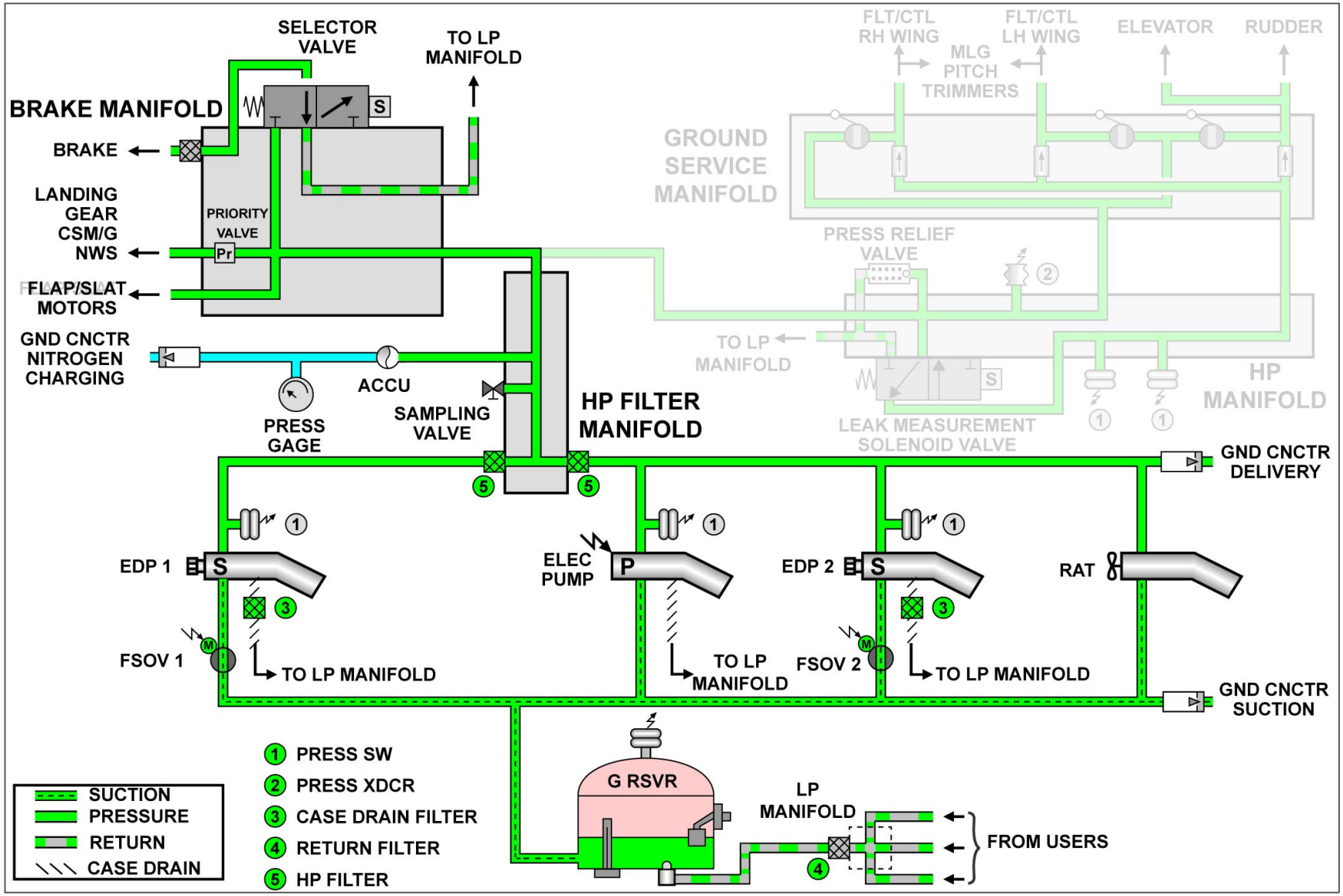

SYSTEM DESCRIPTION - HP FILTER MANIFOLD & BRAKE MANIFOLD

G7508471 - G3NT1T0 - FM29D100000003

GREEN HYDRAULIC SYSTEM D/O (3)

SYSTEM DESCRIPTION (continued)

HP MANIFOLD

The HP manifold supplies the flight control users through the green ground service manifold. The green HP manifold includes various components. A pressure relief valve returns the fluid directly to the reservoir if an overpressure occurs. A leak measurement solenoid valve can be selected shut to isolate the supply to the flight controls, when the aircraft is on the ground. A pressure transducer and two pressure switches give pressure information to the ECAM and flight control computers.

GROUND SERVICE MANIFOLD

The ground service manifold supplies the flight controls of the RH wing, LH wing and tail section via three outputs. After closing the related leak measurement valve, operating manually a valve allows the associated section to be supplied for leak measurement testing.

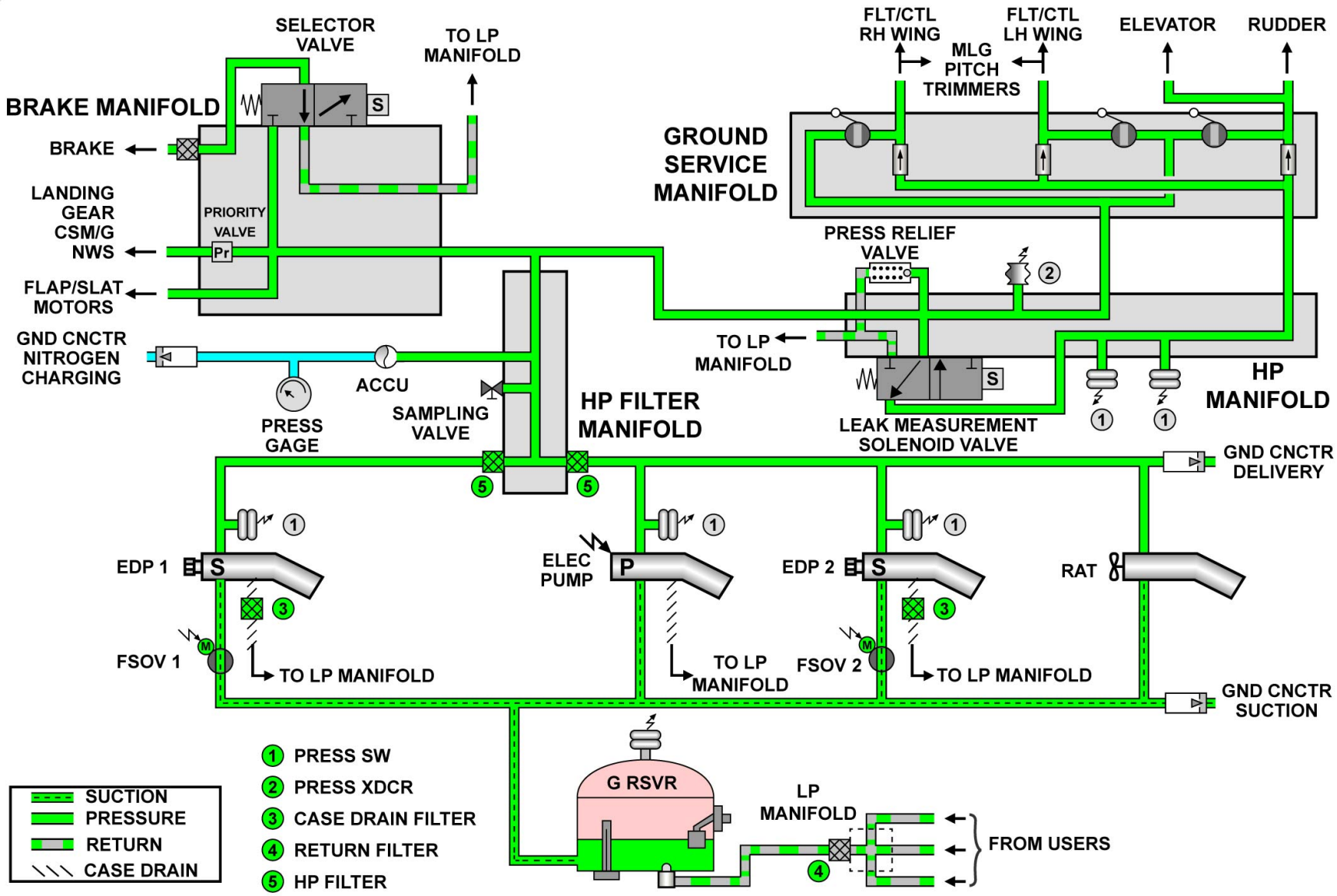

SYSTEM DESCRIPTION - HP MANIFOLD & GROUND SERVICE MANIFOLD

G7508471 - G3NT1T0 - FM29D100000003

GREEN HYDRAULIC SYSTEM D/O (3)

RESERVOIR

The air pressure switch sends a discrete signal to the HSMU and System Data Acquisition Concentrators (SDACs), when the air pressure in the reservoir decreases to 22 psi. The HSMU uses this signal to elaborate its internal logic and controls the FAULT legends on the P/BSW. The same signal is used by the SDACs for the ECAM indication and associated warning. When the air pressure increases to 25 psi, the FAULT legend goes off. A quantity transmitter elaborates a 1 to 9 V analog signal which corresponds to the level of fluid in the reservoir. When a low level is detected, the low level switch sends a discrete signal to the HSMU and SDACs.
The HSMU uses this signal to elaborate its internal logic and to control the FAULT legend on the P/BSW. The same signal is used by the SDACs for the ECAM indication and associated warning. The temperature transmitter sends its analog information to the HSMU. The computer converts the received signal into a voltage, which is between 1 to 9 V. This signal is used for temperature compensation of the ECAM fluid level fill band and overheats detection (1 V corresponding to -60ºC, 9 V corresponding to +120ºC).
When the fluid temperature reaches 95ºC, the HSMU generates an overheat signal and the FAULT legend comes on, on the yellow HYD P/BSW. A copy of this overheat signal is also sent to the SDACs for the ECAM indication and associated warning.

NOTE: Note: The amber OVHT message stays on as long as the sensor detects the overheat.

From the fluid temperature and level gage signals, the HSMU elaborates a 1 to 9 V analog signal, which corresponds to the reservoir filling correction to execute. These signals are sent to the filling correction indicator located on the green ground service panel, via the filling selector valve.

G7508471 - G3NT1T0 - FM29D100000003

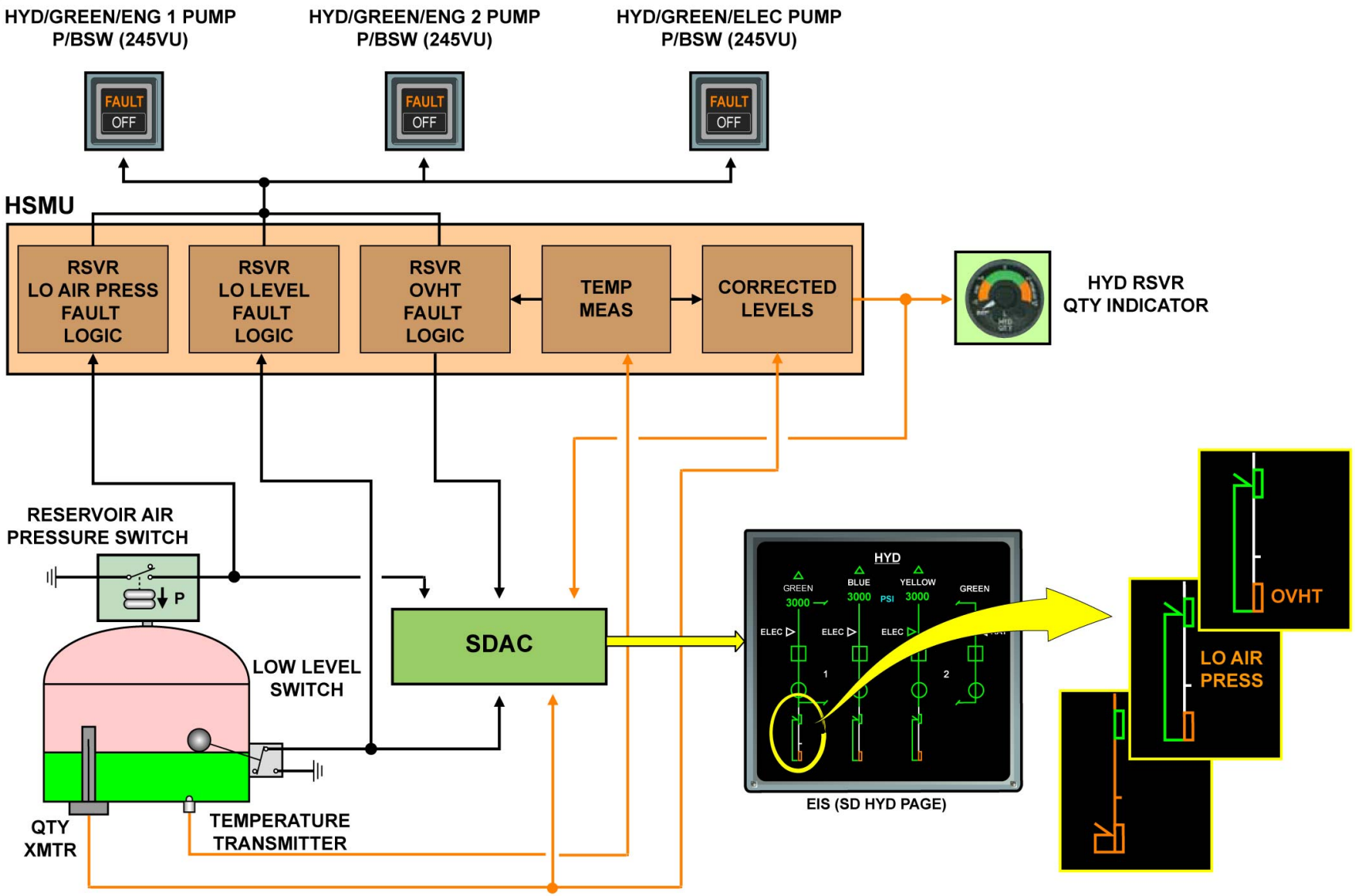

RESERVOIR

G7508471 - G3NT1T0 - FM29D100000003

GREEN HYDRAULIC SYSTEM D/O (3)

FSOV LOGIC OPERATION

The engine 2 FSOV is supplied with 28 VDC either from BUS 2 or from the ESS BUS. The engine 1 FSOV is supplied with 28 VDC from the ESS BUS. In case of engine fire, the crew closes the associated engine 1 or 2 FSOVs. This stops the fluid supply to the engine pump.
In case of green reservoir low level (level switch threshold), the HSMU makes sure that the closing of the engines 1 and 2 FSOVs is automatic, this automatic closing function is inhibited for 30 seconds after changing the L/G control lever from UP to DOWN. Following an automatic closure of the FSOVs, it is necessary to do a system reset by tripping and resetting a circuit breaker. The status of the FSOV is displayed on the ECAM.
Both engine green hydraulic FSOVs are automatically closed by the HSMU, in the event of a green reservoir low level. If the blue and yellow reservoir levels are normal, 150 seconds after the initial closure of the FSOVs, they are re-opened to lubricate and avoid damage to the EDPs.
In case of a further blue or yellow reservoir low level, the green FSOVs remain closed enabling the green system to be restored by using the RAT.
The flight crew cannot re-open the FSOVs in flight, once they have been automatically closed.

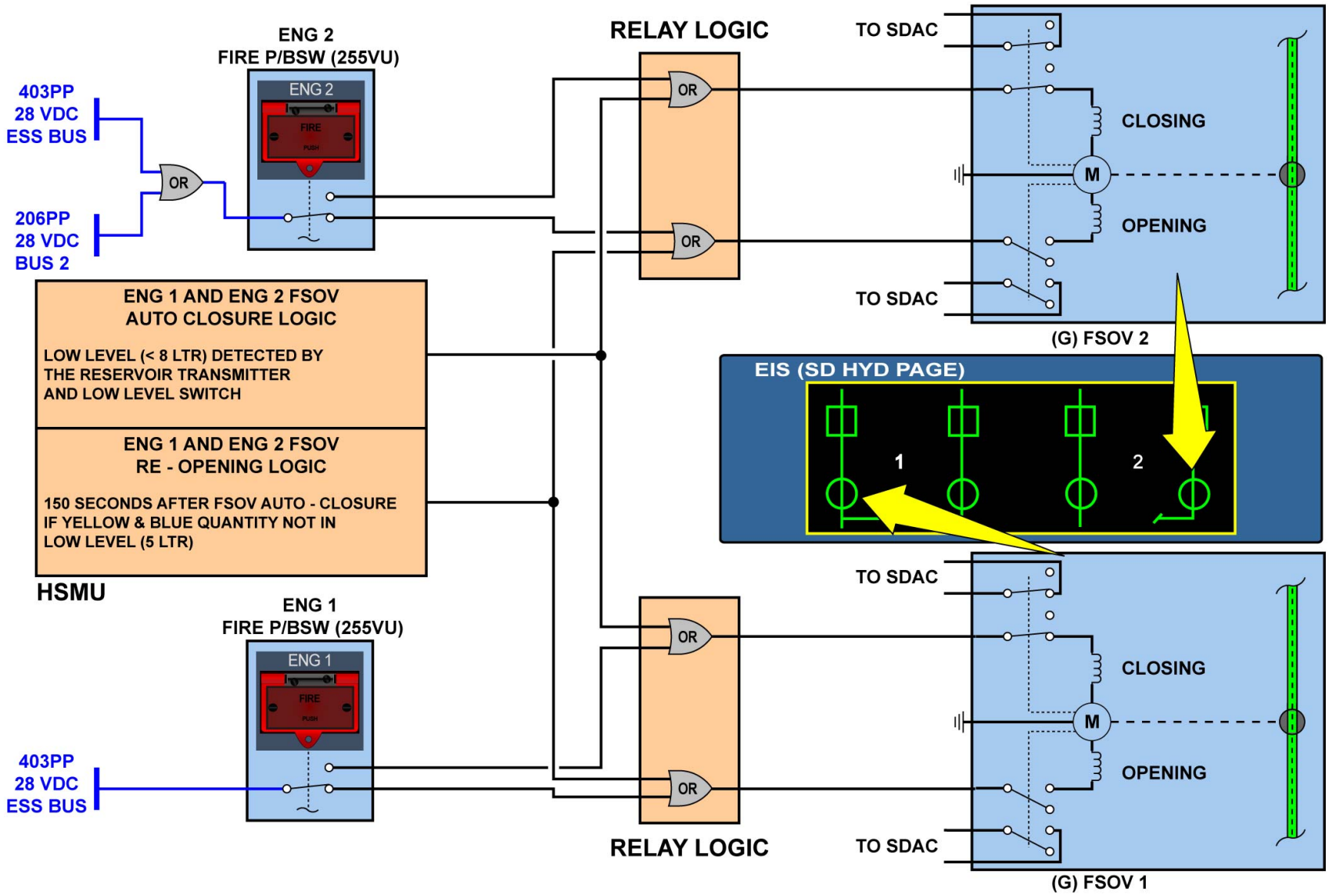

FSOV LOGIC OPERATION

G7508471 - G3NT1T0 - FM29D100000003

GREEN HYDRAULIC SYSTEM D/O (3)

EDP LOGIC OPERATION

As the principle is the same for EDP 1 and EDP 2, EDP 1 has been chosen for the example. As soon as engine 1 is running, the pump pressurizes the system to 3000 psi. A pressure switch monitors the output of each pump. If the pressure drops below 1750 psi, while the engine is running, the fault indication of the HSMU comes on, on the engine P/BSW. The pressure switch also sends signals to the SDAC for ECAM indication and associated warnings for a pump low pressure. The fault indication is inhibited when there is no signal from the Engine Electronic Controller (EEC).

When the green engine 1 pump P/BSW is set to OFF, the depressurization solenoid valve of the corresponding pump is energized and the pump no longer supplies fluid. In this case, the related OFF legend comes on. In flight, following an engine flame-out (N3<50%), the HSMU will energize the associated EDP solenoid valve. This is to easily get a restart during wind milling, by maintaining the engine pump in the depressurized mode until idle speed is reached (only on R/R T700 engine).

In the event of a green reservoir low level, if the blue and yellow reservoir levels are normal, 150 seconds after the initial closure of the FSOVs, EDPs are de-energized and the FSOVs are re-opened to lubricate and avoid damage to the EDPs.

G7508471 - G3NT1T0 - FM29D1000000003

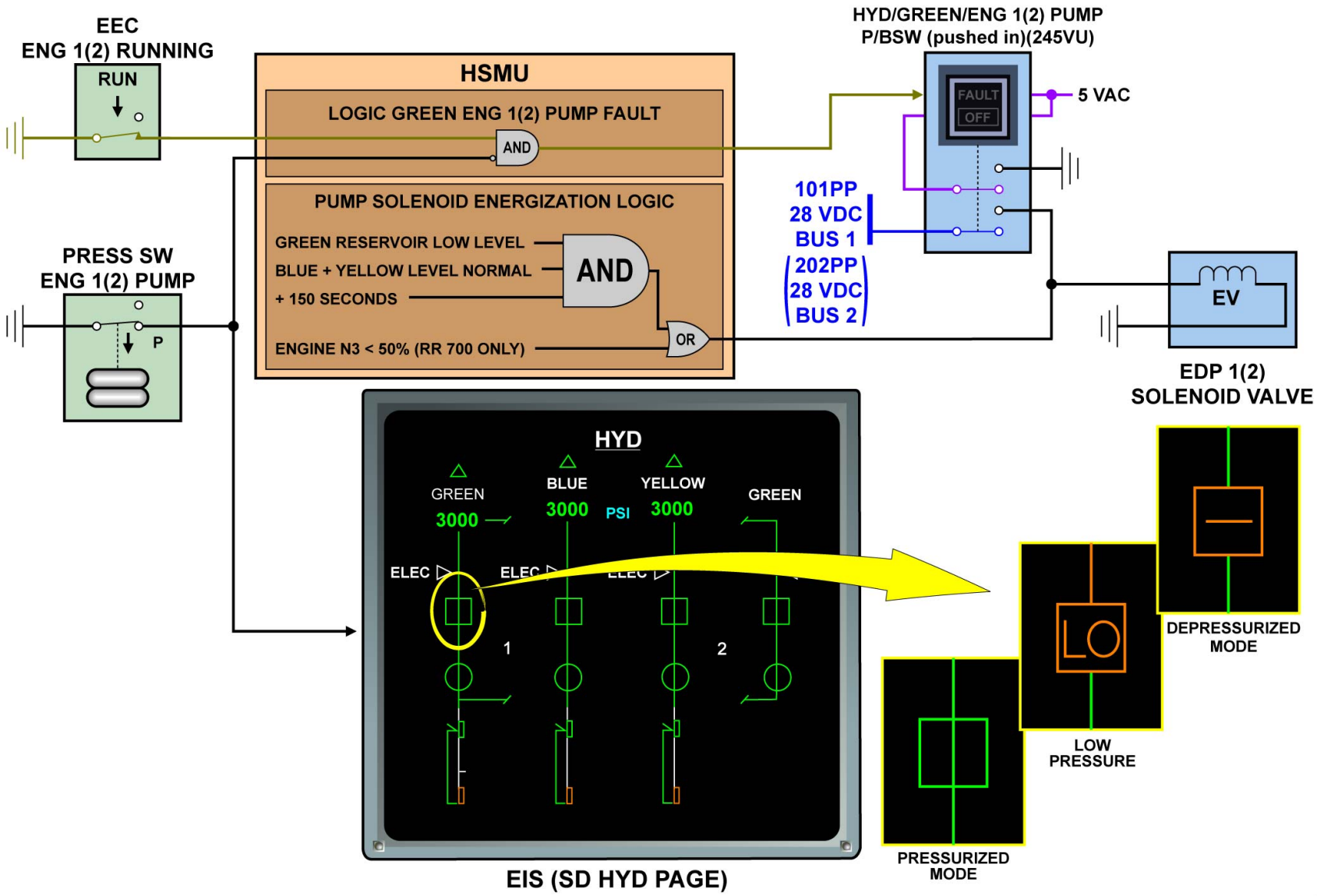

EDP LOGIC OPERATION

G7508471 - G3NT1T0 - FM29D100000003

GREEN HYDRAULIC SYSTEM D/O (3)

ELEC PUMP LOGIC OPERATION

STAND-BY (PUMP OFF)

GENERAL:
The control of the green electric pump operation relies on the P/BSW 4JV, 8JV, the HSMU and a RCCB (Remote Control Circuit Breaker). The motor of the green electric pump is supplied from the 1XP1 bus (115VAC triphase) through the RCCB. The green electric pump can be controlled either manually from the P/BSW 8JV or automatically by the HSMU.
STAND-BY CONFIGURATION:
In stand-by configuration the 28VDC electric pump control loop (4JV / 8JV / HSMU / RCCB) is open; the coil of the RCCB is de-energized; the RCCB is open; the electric pump motor is not supplied; the pump is stopped.

G7508471 - G3NT1T0 - FM29D1000000003

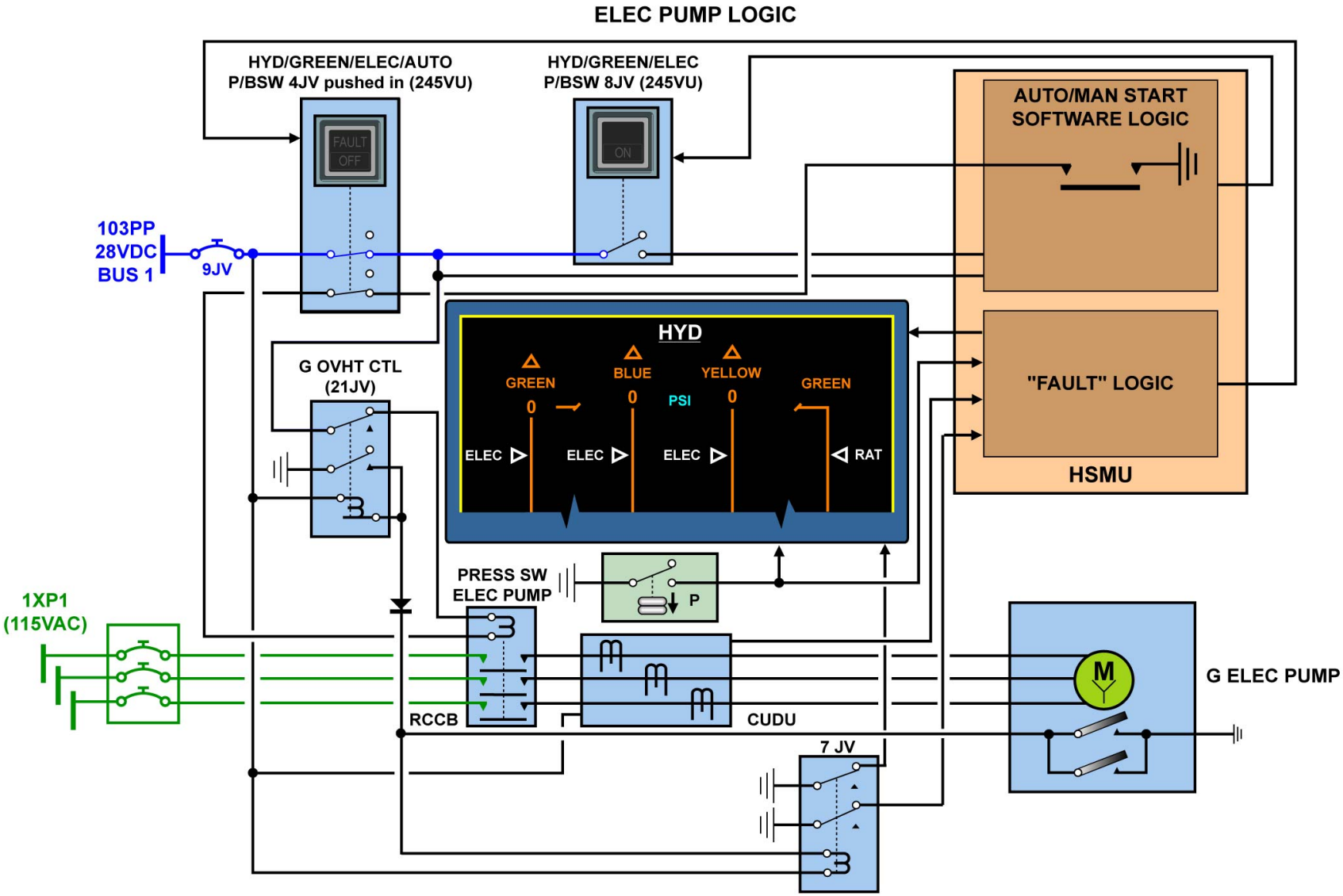

ELEC PUMP LOGIC OPERATION - STAND-BY (PUMP OFF)

G7508471 - G3NT1T0 - FM29D100000003

GREEN HYDRAULIC SYSTEM D/O (3)

ELEC PUMP LOGIC OPERATION (continued)

PUMP START

MANUAL START:
By pressing the 8JV pulse P/BSW the HSMU gets a +28 VDC signal. Getting this signal, by software logic, the HSMU closes the electrical pump control loop. The RCCB coil is energized; the RCCB closes; the electric pump motor is supplied by the 115 VAC; the pump starts running.
The HSMU also controls the illumination of the cyan ON legend on the 8JV pulse P/BSW.

G7508471 - G3NT1T0 - FM29D1000000003

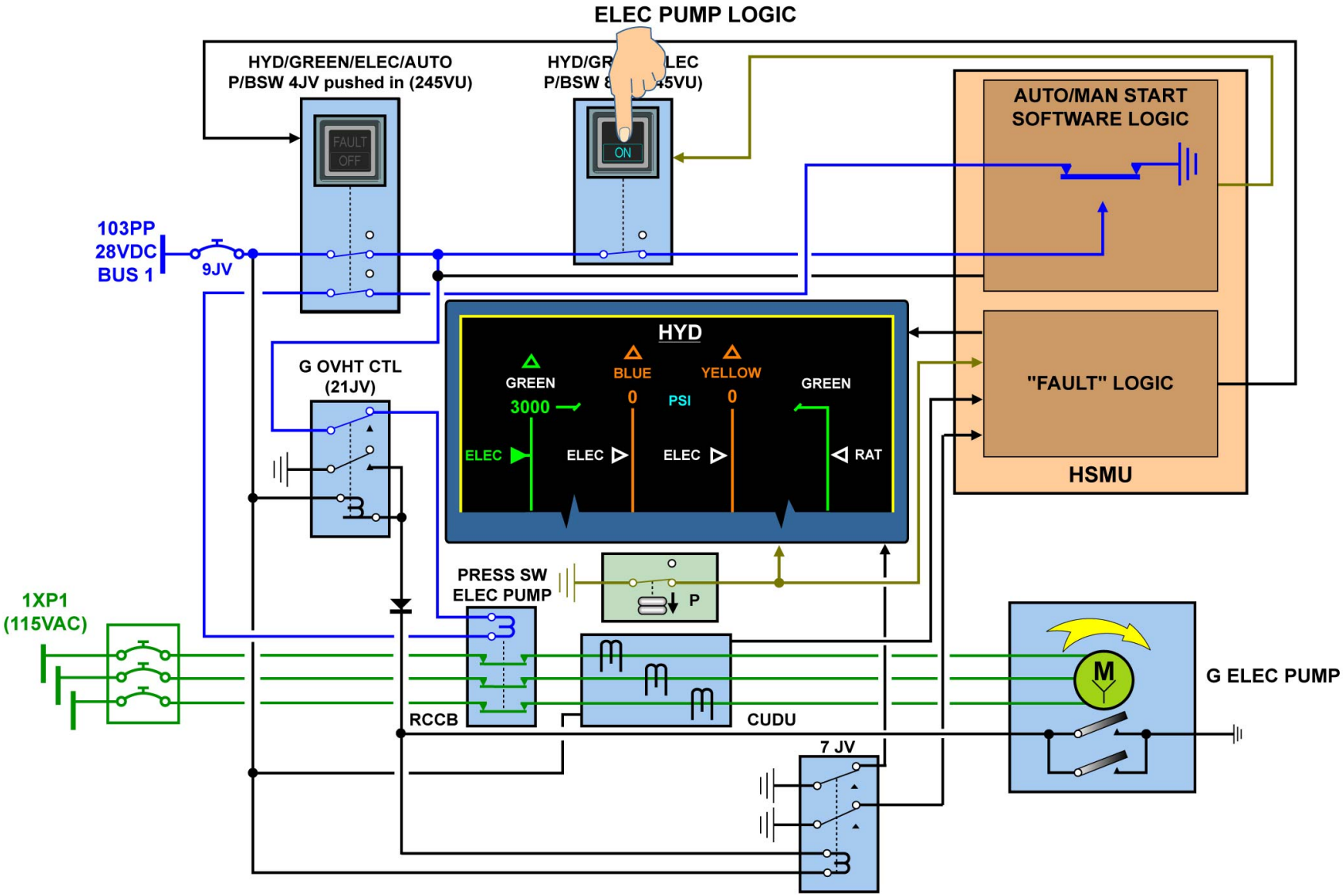

ELEC PUMP LOGIC OPERATION - PUMP START

G7508471 - G3NT1T0 - FM29D100000003

GREEN HYDRAULIC SYSTEM D/O (3)

ELEC PUMP LOGIC OPERATION (continued)

PUMP RUNNING

PUMP RUNNING:
When the 8JV pulse P/BSW is released the HSMU does not get any longer the +28VDC signal but, by software logic, keeps the electric pump control loop closed. The RCCB is kept energized closed; the electric pump keeps running; the cyan "ON" legend is kept illuminated by the HSMU.
MANUAL STOP:
By pressing again the 8JV pulse P/BSW while the electric pump is running the HSMU gets a new + 28 VDC signal. Getting this new signal, by software logic, the HSMU opens the electric pump control loop; the RCCB coil is de-energized; the RCCB opens; the electrical pump motor is no longer supplied by the 115 VAC; the pump stops running.
The HSMU also controls the cyan "ON" legend on the 8JV pulse P/BSW to extinguish.
AUTOMATIC CONTROL:
The green electric pump can be controlled automatically by the HSMU. The control logic is as follows:
Aircraft in flight (input from LGCIU) AND airspeed above 100 kts (input from ADIRU) AND one engine failed (HP compressor below 50 % input from EIVMU) AND landing gear control lever selected UP => green electric pump runs for 25 seconds.
The purpose of this logic is to ensure that, with one engine failed (green hydraulic system pressurized by one EDP only), the landing gear retraction does not last longer than in normal configuration with two engines running (green hydraulic system pressurized by two EDP). Experiencing the aerodynamic drag of the gear in-transit configuration during an abnormal long time would not be compatible with the 50 % loss of engine thrust.

G7508471 - G3NT1T0 - FM29D100000003

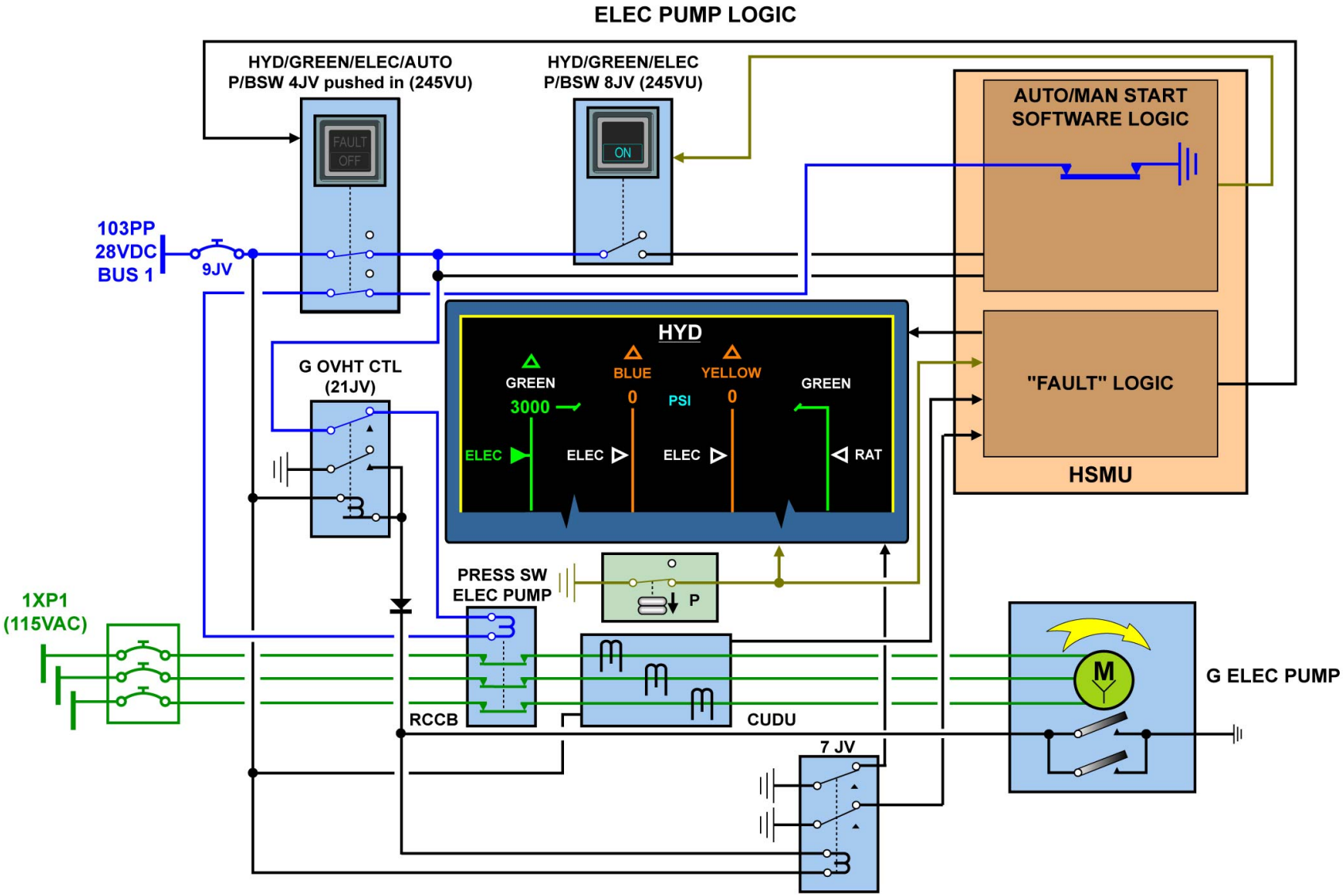

ELEC PUMP LOGIC OPERATION - PUMP RUNNING

G7508471 - G3NT1T0 - FM29D100000003

GREEN HYDRAULIC SYSTEM D/O (3)

ELEC PUMP LOGIC OPERATION (continued)

PUMP LOW PRESSURE

LOW PRESSURE:
The green electric pump delivers hydraulic pressure. A switch connected to the pressure line downstream of the pump monitors the hydraulic pressure.
During normal operation of the electric pump this pressure switch is closed sending to both, the EIS and the HSMU a ground signal.
If the delivered pressure drops below 1450 psi, the pressure switch opens; the ground signal from the pressure switch is lost by the EIS and the HSMU; the electric pump is displayed amber on the ECAM hydraulic system page by the EIS; the HSMU controls the amber FAULT legend on the 4JV P/BSW to illuminate.
These indications are inhibited if the electric pump is not commanded to run.
Note: The electric pump is not stopped automatically in case of low pressure being detected by the pressure switch. If it is stopped manually by releasing-out the 4JV P/BSW, the amber FAULT legend is extinguished by the HSMU, the white OFF legend illuminates, on the 4JV P/BSW and the cyan ON legend is extinguished on the 8JV P/BSW.

G7508471 - G3NT1T0 - FM29D1000000003

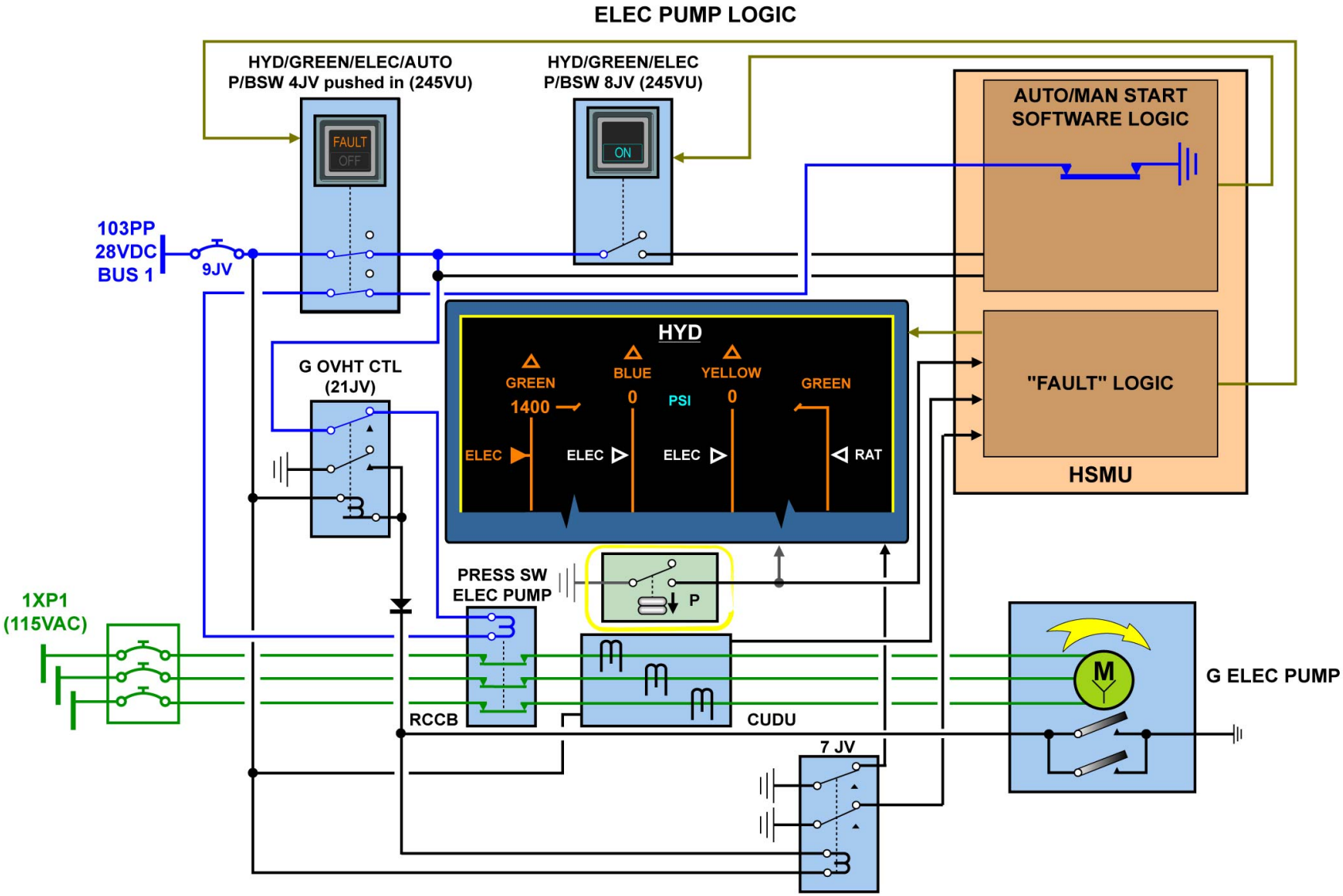

ELEC PUMP LOGIC OPERATION - PUMP LOW PRESSURE

GREEN HYDRAULIC SYSTEM D/O (3)

ELEC PUMP LOGIC OPERATION (continued)

PUMP OVERHEAT

OVERHEAT:
In the event of a green electric pump motor overheating, the electric pump stops automatically; related indications are displayed; electric pump further operation is inhibited (even after cool down); reset is only possible on the ground.
The above logic is independent from the HSMU software, it is performed by a dedicated external circuit including three components:
-a thermal switch installed in the motor of the electric pump,
-a self-holding type relay (G OVHT CTL 21JV)
-an indication relay (7JV).
If the temperature of the electric pump motor reaches 230 deg.C (446 deg.F) the thermal switch closes; a ground is supplied to the coil of the relays 21JV and 7JV; both relays 21JV and 7JV are getting energized, they both open.
The opening of the relay 21JV causes the opening of the electric pump control loop; the RCCB coil is no longer energized, the RCCB opens; the motor of the electric pump is no longer supplied by the 115VAC; the electric pump stops running.
With the opening of the relay 7JV the ground signals received by the EIS and the HSMU are both lost; the EIS displays the electric pump in amber with the amber OVHT legend on the ECAM hydraulic system page; the amber FAULT is illuminated by the HSMU on the 4JV P/BSW. The cyan ON legend on the 8JV P/BSW is extinguished by the HSMU.
Note: If the 4JV P/BSW is released-out (as per ECAM procedure) the OFF white legend illuminates, but the amber FAULT legend is not extinguished by the HSMU.
When the temperature of the electric pump motor drops below the overheat threshold the thermal switch re-opens but the relay 21JV remains energized open (self-holding); the electric pump control loop is latched open making impossible any further start of the pump.
On the ground, reset of the 9JV C/B (not accessible in flight) makes possible to recover the control of the electric pump. Opening the 9JV C/B de-energizes the coil of the relay 21JV; the relay 21JV is unlatched and closes. After the 9 JV C/B has been closed the control loop of the electric pump is restored to the stand-by configuration.

G7508471 - G3NT1T0 - FM29D100000003

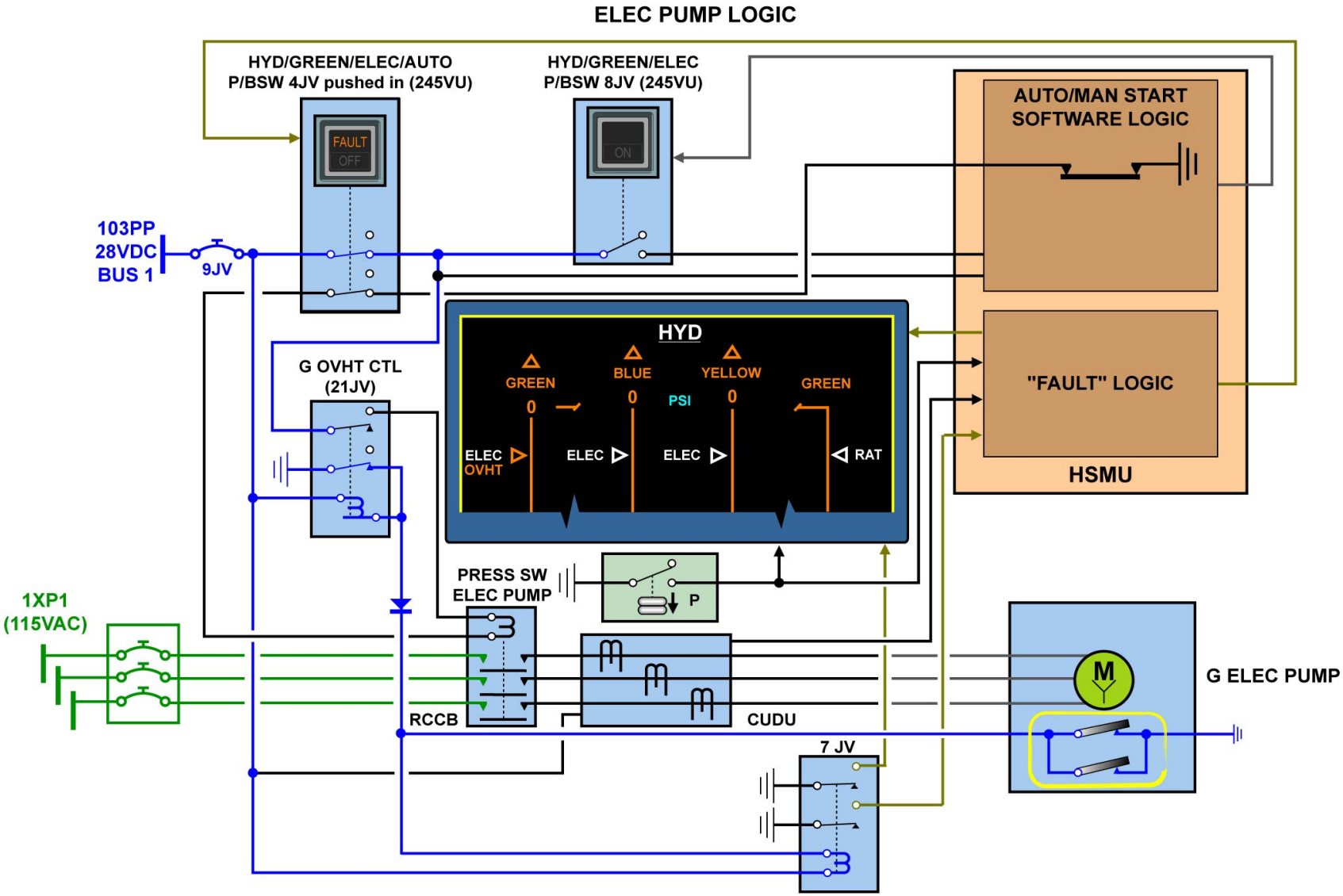

ELEC PUMP LOGIC OPERATION - PUMP OVERHEAT

G7508471 - G3NT1T0 - FM29D100000003

GREEN HYDRAULIC SYSTEM D/O (3)

ELEC PUMP LOGIC OPERATION (continued)

CURRENT UNBALANCE

UNBALANCE:
The 115 VAC triphase power supply of the electric pump is monitored by the CUDU (Current Unbalance Detection Unit). This component, based on the Hall effect sensor principle, measures and compares the electric currents of each individual phase of the electric pump power supply.
During normal operation of the electric pump, the currents of each individual phase are balanced.
In the event of a current unbalance between at least two phases, the CUDU signals the fault to the HSMU which, by software logic, opens the electric pump control loop; the RCCB is de-energized; the motor of the electric pump is no longer supplied; the electric pump stops running.
The fault signal sent to the HSMU is latched by the CUDU making it impossible any further start of the electric pump. To recover control of the electric pump the CUDU has to be de-powered / re-powered; this can be carried-out on the ground by a reset of the 9JV C/B.
In addition to the automatic stop of the pump, the HSMU also controls the amber FAULT legend to illuminate, on the 4JV P/BSW and the cyan ON legend to extinguish on the 8JV P/BSW.
Thanks to a test push-button on the CUDU, current unbalance condition can be simulated and automatic shut-down of the electric pump checked during maintenance.

G7508471 - G3NT1T0 - FM29D100000003

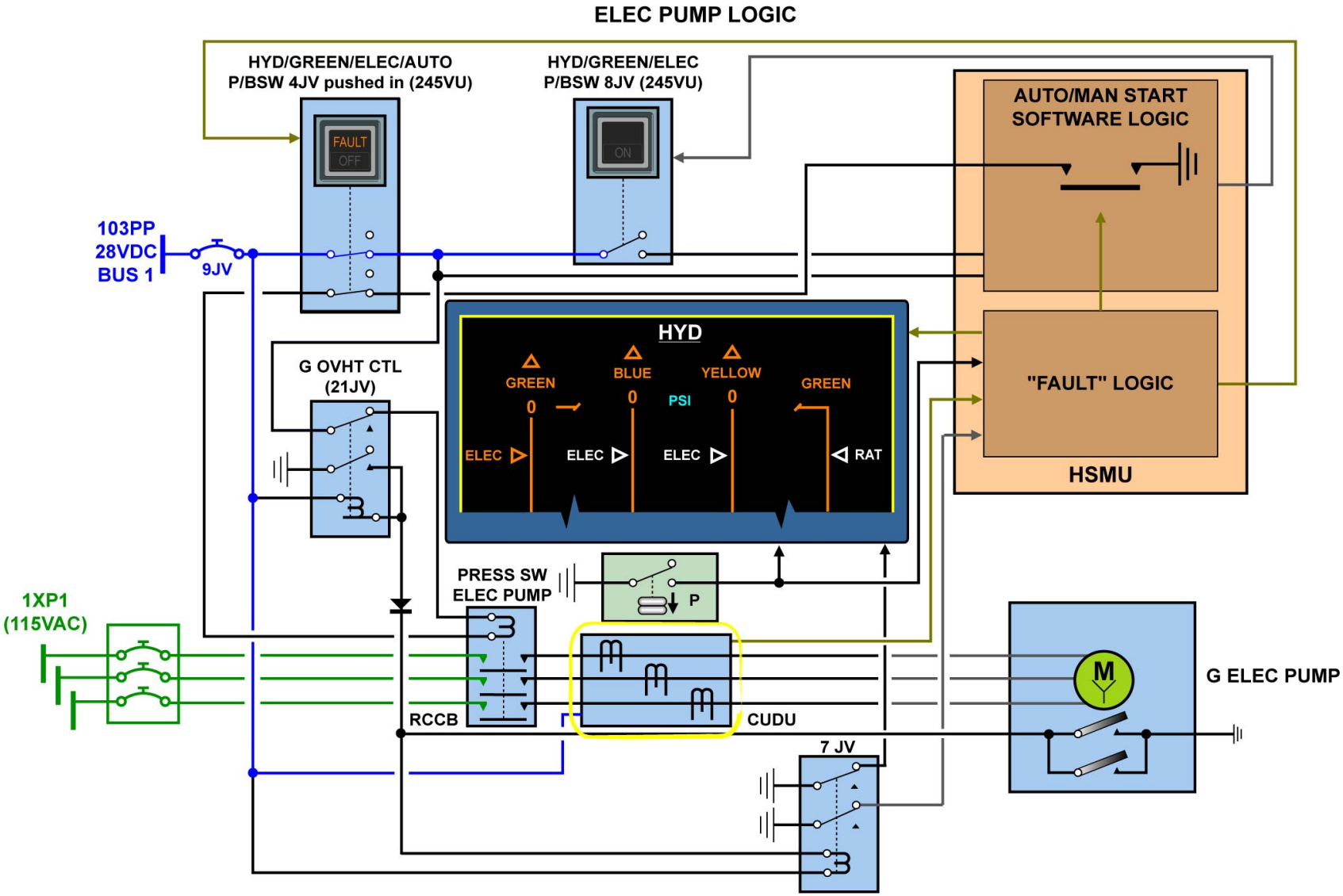

ELEC PUMP LOGIC OPERATION - CURRENT UNBALANCE

GREEN HYDRAULIC SYSTEM D/O (3)

RAT LOGIC OPERATION

Manual deployment of the RAT is done by momentarily pushing the RAT MAN ON P/BSW on the overhead hydraulic panel. This connects the HOT BATTERY BUS to the deploy solenoid 1 to release the RAT uplock. The HSMU controls the automatic release of the RAT uplock by energizing solenoid 2, supplied by ESS BUS. This will occur in flight above 100 Kts under any of the following conditions:
- ENG1 and 2 failed,
- green and blue reservoir low level,
- green and yellow reservoir low level.

G7508471 - G3NT1T0 - FM29D1000000003

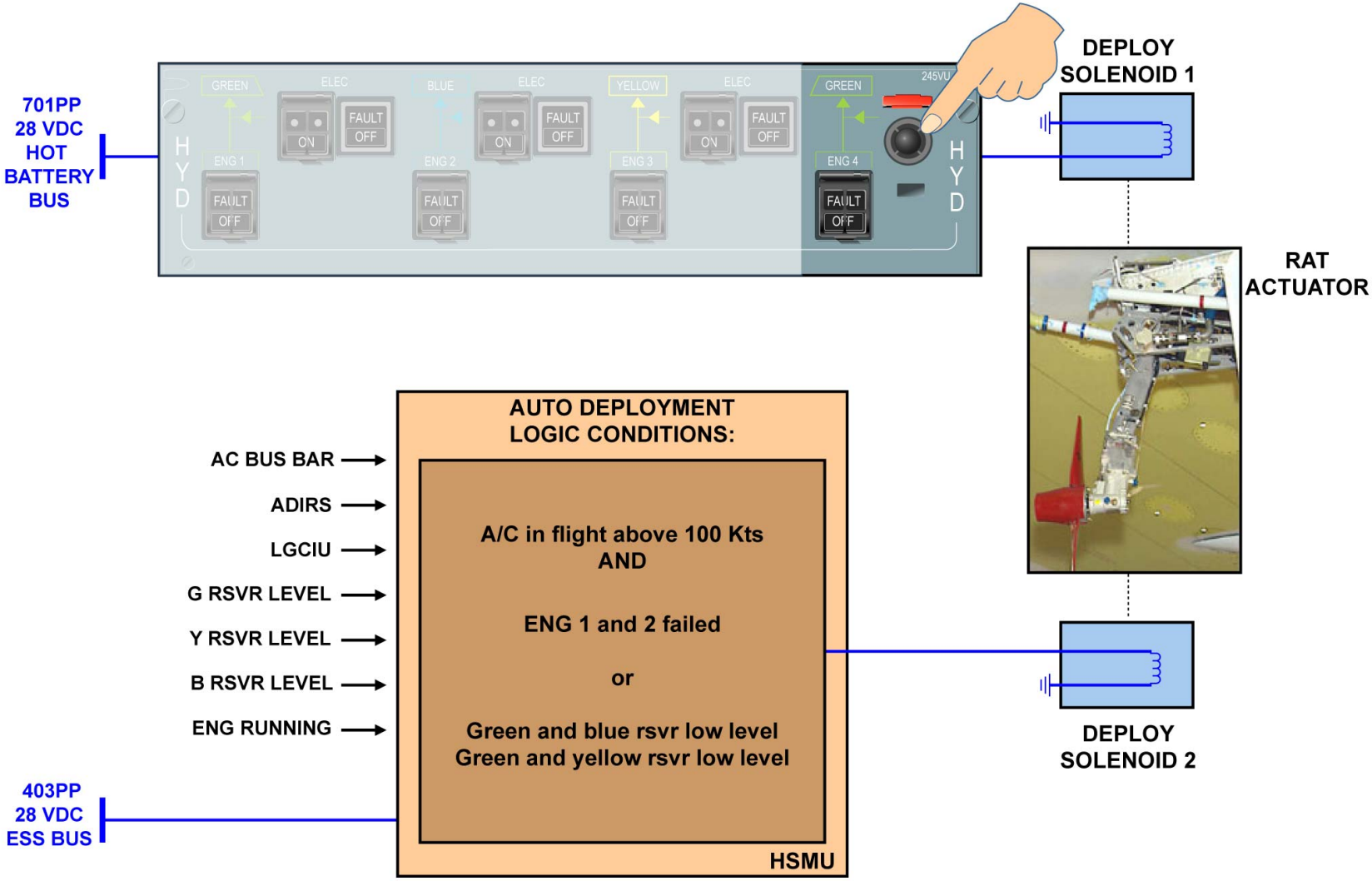

RAT LOGIC OPERATION

G7508471 - G3NT1T0 - FM29D100000003

GREEN HYDRAULIC SYSTEM D/O (3)

RAT LOGIC OPERATION (continued)

RAT TURBINE ASSEMBLY / RAT STOW PANEL

The RAT turbine assembly is installed in flap track n°4 of the right wing. It includes:
-The RAT turbine,
-The RAT leg assy,
-The RAT hydraulic pump,
-The RAT actuator,
-The RAT manifold.
At the front of the leg assembly, there is a blade index mechanism. It locks the turbine and blades so that they do not turn when the turbine is retracted or not fully extended. The mechanism is engaged when the arrows on the hub and the lower leg gearbox are lined up. It automatically disengages when the RAT is approximately 10 degrees from full extension position.
The LAMP TEST switch is used for a lamp test of the STOWED lamp, the re-stow INTERLOCK WARNING lamp and the ACTUATOR PRESSURE lamp. When you press it, all lamps come on. When you release it, all lamps go off.

G7508471 - G3NT1T0 - FM29D100000003

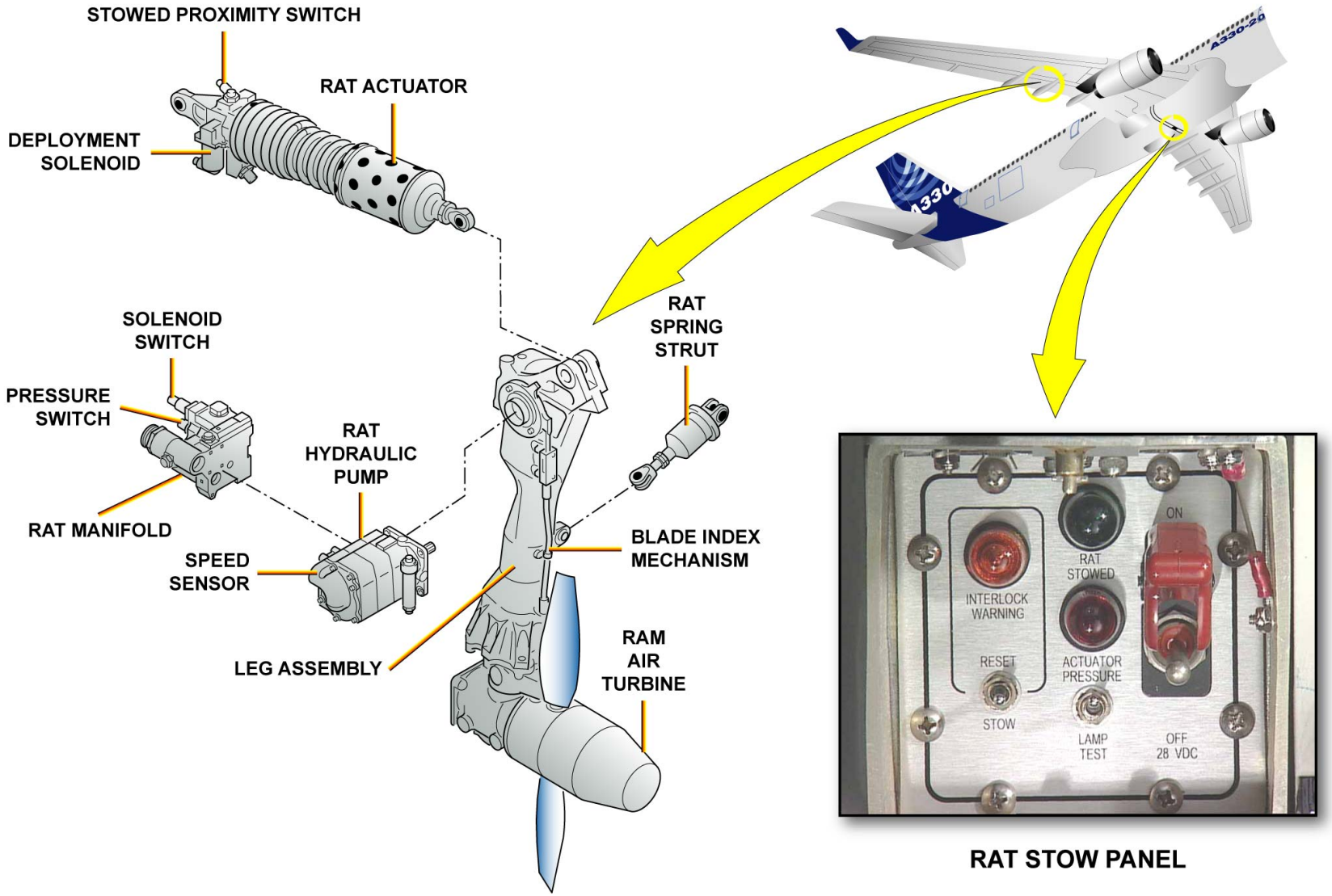

RAT LOGIC OPERATION - RAT TURBINE ASSEMBLY / RAT STOW PANEL

G7508471 - G3NT1T0 - FM29D100000003

GREEN HYDRAULIC SYSTEM D/O (3)

CURRENT UNBALANCE DETECTOR UNITS (CUDU)

The CUDUs monitor the supply current of the electric pumps. They detect a current unbalance or the cut-off of one or two phases in the three phases power supply of the electric pumps. They send, to the HSMU, a signal to cut-off the power supply of the contactors related to the electric pumps when they detect an unbalance between the three phases. Switching off the power supply of the current unbalance detector units launches the reset.
A test pushbutton associated to an annunciator light comes on when the test has been done and the CUDU operates properly.

G7508471 - G3NT1T0 - FM29D1000000003

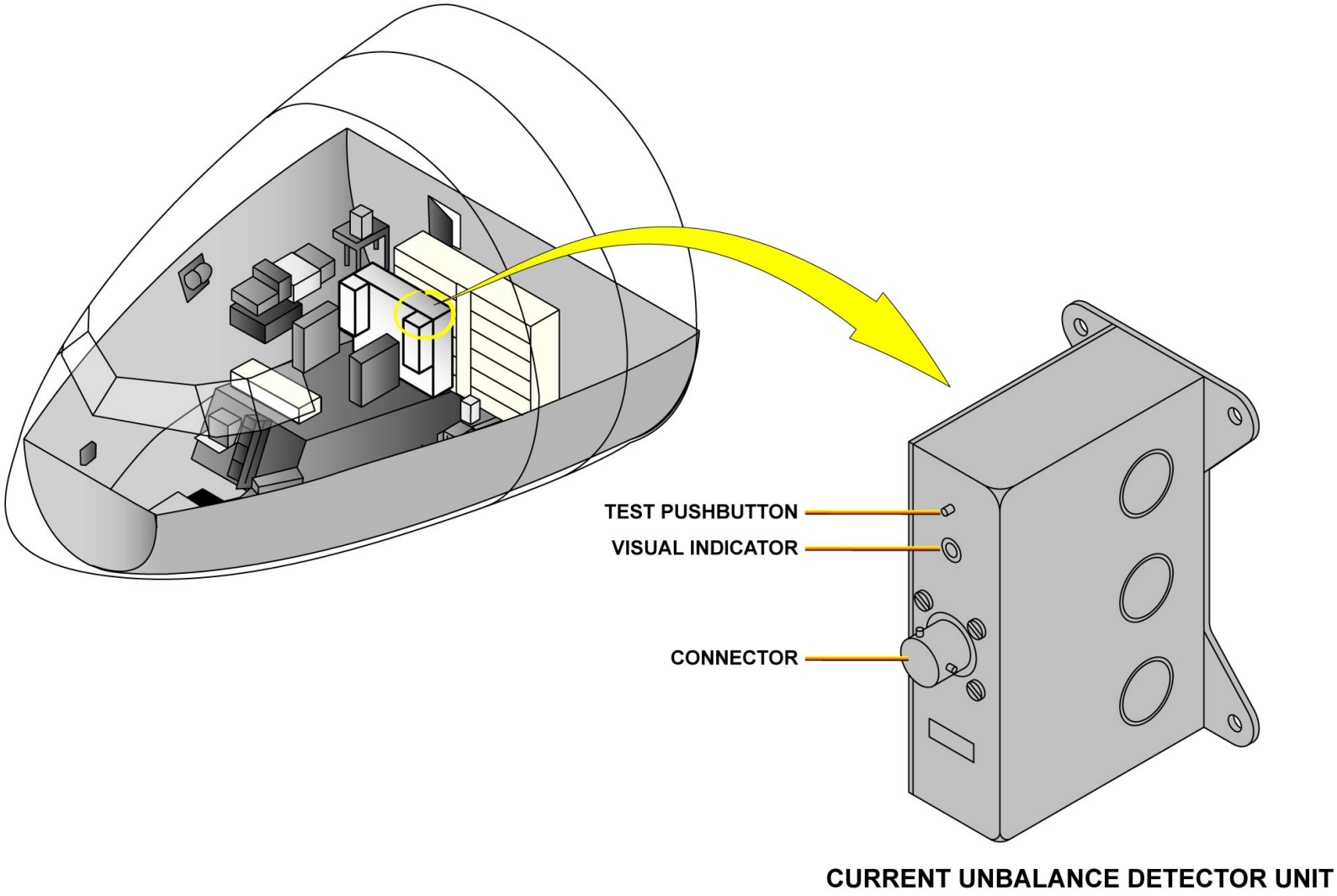

CURRENT UNBALANCE DETECTOR UNITS (CUDU)

G7508471 - G3NT1T0 - FM29D1000000003

GREEN HYDRAULIC SYSTEM D/O (3)

DISTRIBUTION INDICATIONS

The pressure transducer (6JS1) sends an analog signal, which is used to give a hydraulic system pressure indication on the hydraulic ECAM page. This same signal is also sent to the flight control system in order to give the pressure indication. The leak measurement solenoid valve is normally de-energized open. Selecting OFF, at the maintenance panel, will energize the valve to close off the supply to the flight control system. The solenoid power supply is inhibited in flight above 100 Kts using information from Air Data/Inertial Reference Unit 1 (ADIRU 1) and Landing Gear Control and Interface Units (LGCIUs).
The pressure switch (19CE1) sends a discrete signal, if the pressure is less than 1450 psi. This signal is used for ECAM indication on the hydraulic page and for warning messages. This signal is also used by the flight control system. The pressure switch (7JS1) only gives pressure information to the flight control system and to the Brake/Steering Control Unit (BSCU). The ground service manifold is used during the ground leak test, to selectively let the hydraulic supply to the flight controls when the leak measurement valve is closed.

G7508471 - G3NT1T0 - FM29D1000000003

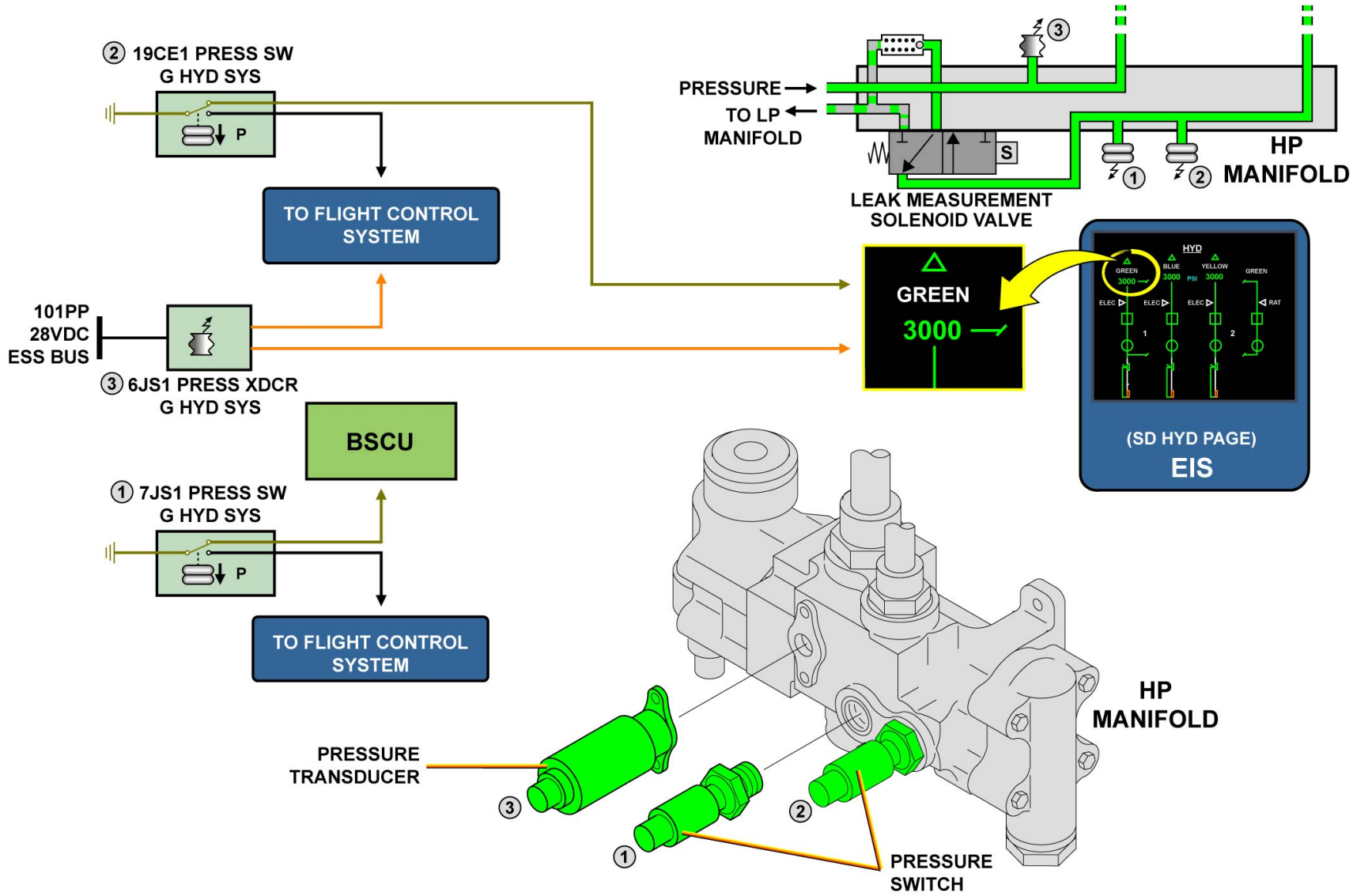

DISTRIBUTION INDICATIONS

BLUE HYDRAULIC SYSTEM D/O (3)

SYSTEM DESCRIPTION

The blue hydraulic system is pressurized via different components which will be described.

RESERVOIR

The blue reservoir supplies hydraulic fluid to the engine pump and the electric pump. The reservoir is air-pressurized to 50 psi (in flight or ground) in order to avoid cavitation of the hydraulic pumps. It is designed to remain pressurized for at least 12 hours.
Various accessory components are installed on the reservoir. On the top of each reservoir, an air pressure switch monitors the air pressure inside the reservoir. A low level switch is installed on the middle of each reservoir and monitors the fluid quantity to activate a low level caution at 5l remaining. An analog system, based on capacitive transmitters, permanently monitors the fluid level. A temperature transmitter installed on the return port of the reservoir, sends fluid temperature indications to the Hydraulic System Monitoring Unit (HSMU).

FIRE SHUT OFF VALVE (FSOV)

The Fire Shut Off Valve (FSOV) is composed of a ball valve and electric motor. It is located outside the engine fire zone. The motor section contains limit switches for control and indications.

ENGINE DRIVEN PUMP (EDP)

The two-stage Engine Driven Pump (EDP) is controlled by a solenoid valve. When energized, the pump is set to the depressurized mode. The output of the pump is through an integral pulsation damper.

CASE DRAIN FILTER

Each EDP has a case drain line and a filter, which is of the non-bypassing type, with a clogging indicator set to operate at 87 psi.

ELECTRIC PUMP

The two-stage electrical pump is controlled by the HSMU, and is monitored for phase unbalance through the Current Unbalance Detection Unit (CUDU), and for overheat conditions.

GROUND CONNECTORS

For maintenance purposes, ground self-sealing connectors are installed on the service panel.

RETURN FILTER

The LP return filter is of the bypassing type, with a clogging indicator set to operate at 73 psi.

G7508471 - G3NT1T0 - FM29D200000003

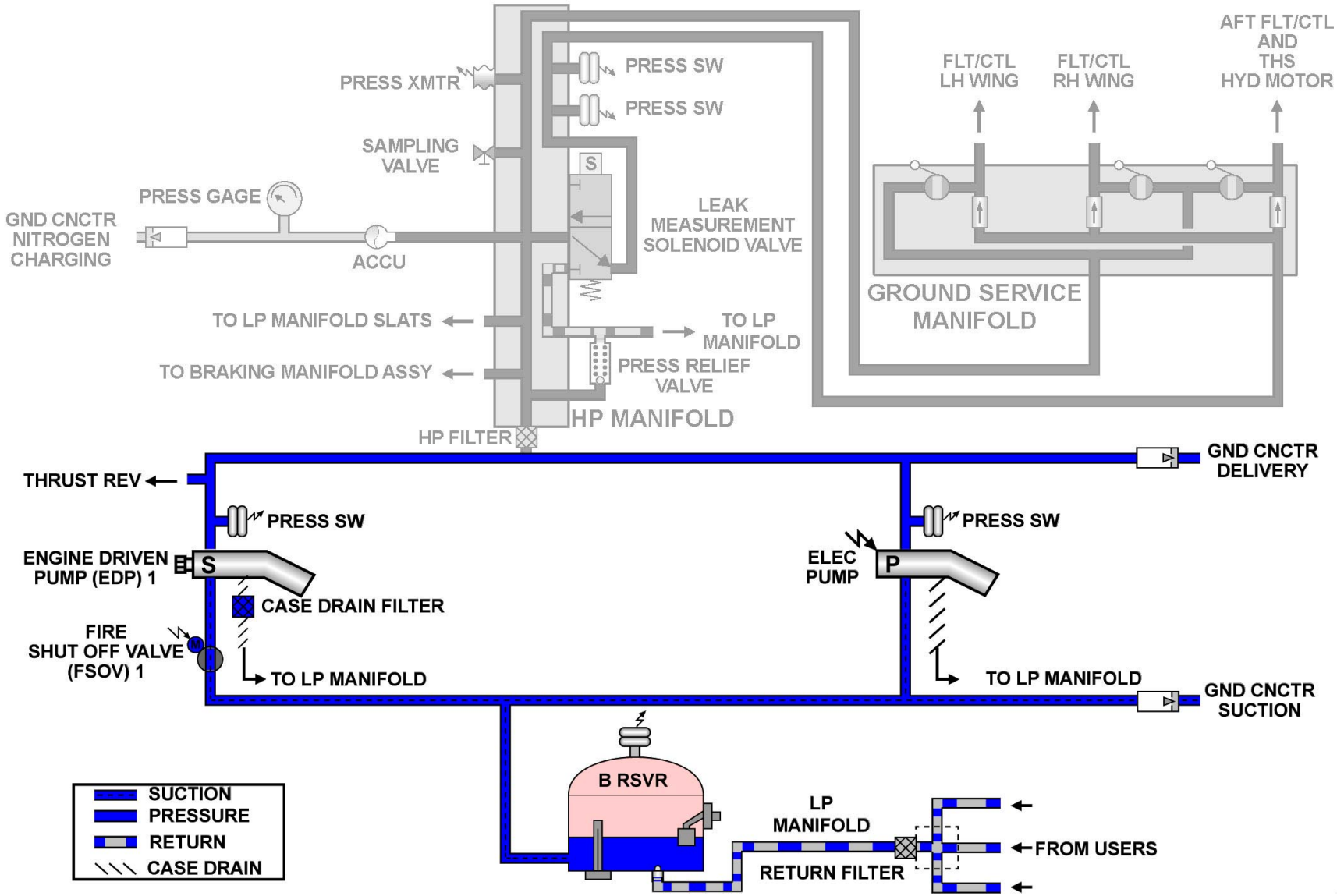

SYSTEM DESCRIPTION - RESERVOIR ... RETURN FILTER

G7508471 - G3NT1T0 - FM29D200000003

BLUE HYDRAULIC SYSTEM D/O (3)

SYSTEM DESCRIPTION (continued)

ACCUMULATOR

The power accumulator dampens the pump delivery pulsations and any pressure surges, and compensates for pump response time in the event of high flow demand. It is installed in vertical position and has two ports: a GAS port at the upper end and a FLUID port at the lower end. The GAS port is connected via a pipe to a nitrogen charging ground connector and to a direct-reading pressure gage which are installed on the blue service panel.

G7508471 - G3NT1T0 - FM29D200000003

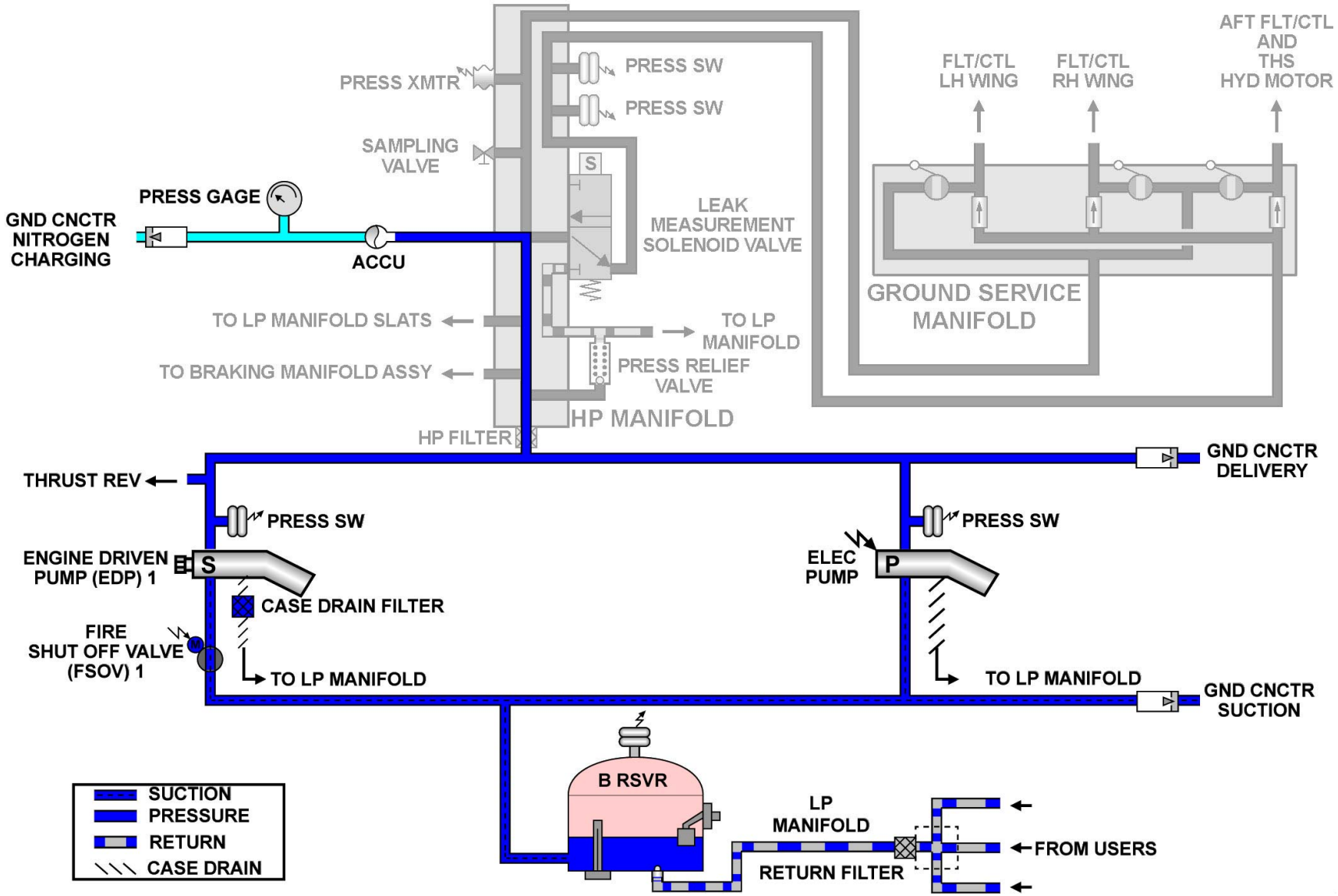

SYSTEM DESCRIPTION - ACCUMULATOR

G7508471 - G3NT1T0 - FM29D200000003

BLUE HYDRAULIC SYSTEM D/O (3)

SYSTEM DESCRIPTION (continued)

HP MANIFOLD

The High Pressure (HP) filter is of the non-bypassing type, with a clogging indicator set to operate at 87 psi. A clogging indicator is installed on each filter. A pressure relief valve returns the fluid directly to the reservoir in overpressure condition. A leak measurement solenoid valve can be selected shut to isolate the supply to the flight controls, when the A/C is on the ground.
A pressure transmitter and two pressure switches give pressure information to the ECAM and flight control computers. The sampling valve is used to take samples of hydraulic fluid to look for contamination.

CAUTION: When sampling, let the fluid run for a moment into a container, then put 0.2L (0.05US Gal) of fluid into an appropriate bottle for analysis.

GROUND SERVICE MANIFOLD

The ground service manifold supplies the flight controls of the RH wing, LH wing and tail section via three outputs. After closing the related leak measurement valve, operating manually a valve allows the related section to be supplied for leak measurement testing.

G7508471 - G3NT1T0 - FM29D200000003

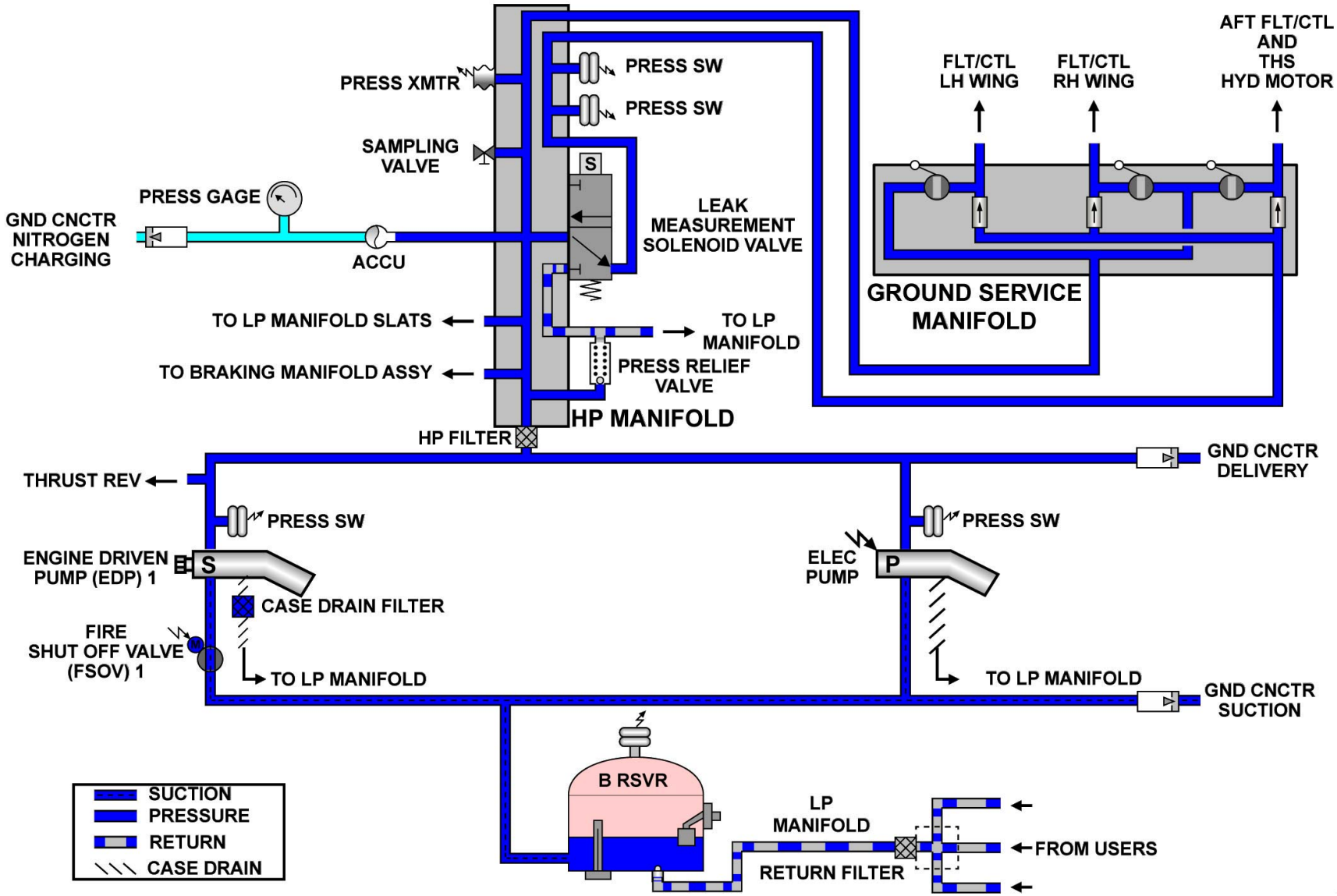

SYSTEM DESCRIPTION - HP MANIFOLD & GROUND SERVICE MANIFOLD

G7508471 - G3NT1T0 - FM29D200000003

BLUE HYDRAULIC SYSTEM D/O (3)

RESERVOIR

The air pressure switch sends a discrete signal to the HSMU and System Data Acquisition Concentrators (SDACs). When the air pressure in the reservoir decreases to 22 psi, the contact opens. The HSMU uses this signal to elaborate its internal logics and controls the FAULT legend(s) on the P/BSW on the HYD section of the overhead panel. The same signal is used by the SDACs for ECAM indication and associated warning. When the air pressure increases to 25 psi, the contact closes, the FAULT legend(s) goes off.
A quantity transmitter elaborates a 1 to 9 V analog signal which agrees with to the level of fluid in the reservoir. When a low level is detected, the low level switch sends a discrete signal to the HSMU and SDACs. The HSMU uses this signal to elaborate its internal logics and controls the FAULT legend(s) on the P/BSW on the HYD section of the overhead panel. The same signal is used by the SDACs for the ECAM indication and associated warning.
The temperature transmitter sends its analog information to the HSMU. The computer converts the received signal into a voltage, which is between 1 V to 9 V. This signal is used for temperature compensation of the ECAM fluid level fill band, and overheat detection. (1 V related to -60ºC , 9 V related to +120ºC). When a temperature of a system reaches 95ºC, the HSMU gives an overheat signal and triggers the FAULT legend related to the engine pumps and to the electric pump. A copy of this overheat signal is also sent to the SDACs for the ECAM indication and associated warning.

NOTE: Note: The amber OVHT message stays on as long as the sensor detects the overheat.

From the fluid temperature and level gage signals, the HSMU elaborates a 1 to 9 V analog signal, which agrees with the reservoir filling correction to make. These signals are sent to the filling correction indicator located on the green ground service panel, via the filling selector valve.

G7508471 - G3NT1T0 - FM29D200000003

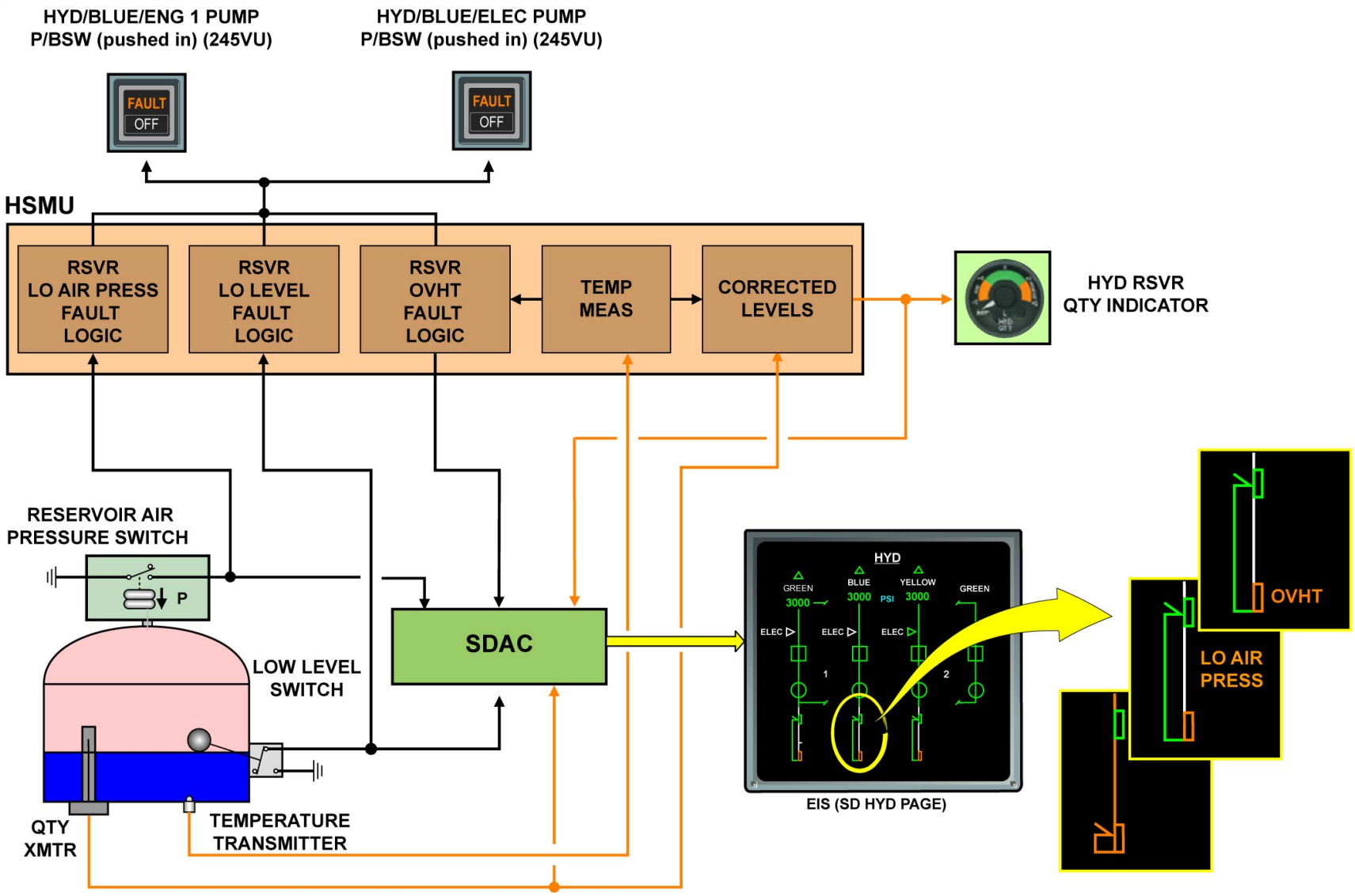

RESERVOIR

G7508471 - G3NT1T0 - FM29D200000003

BLUE HYDRAULIC SYSTEM D/O (3)

FIRE SOV LOGIC OPERATION

The engine 1 fire SOV is supplied with 28 VDC from the ESS BUS. In case of an engine fire, the crew closes the engine 1 fire SOV.

G7508471 - G3NT1T0 - FM29D200000003

FSOV LOGIC

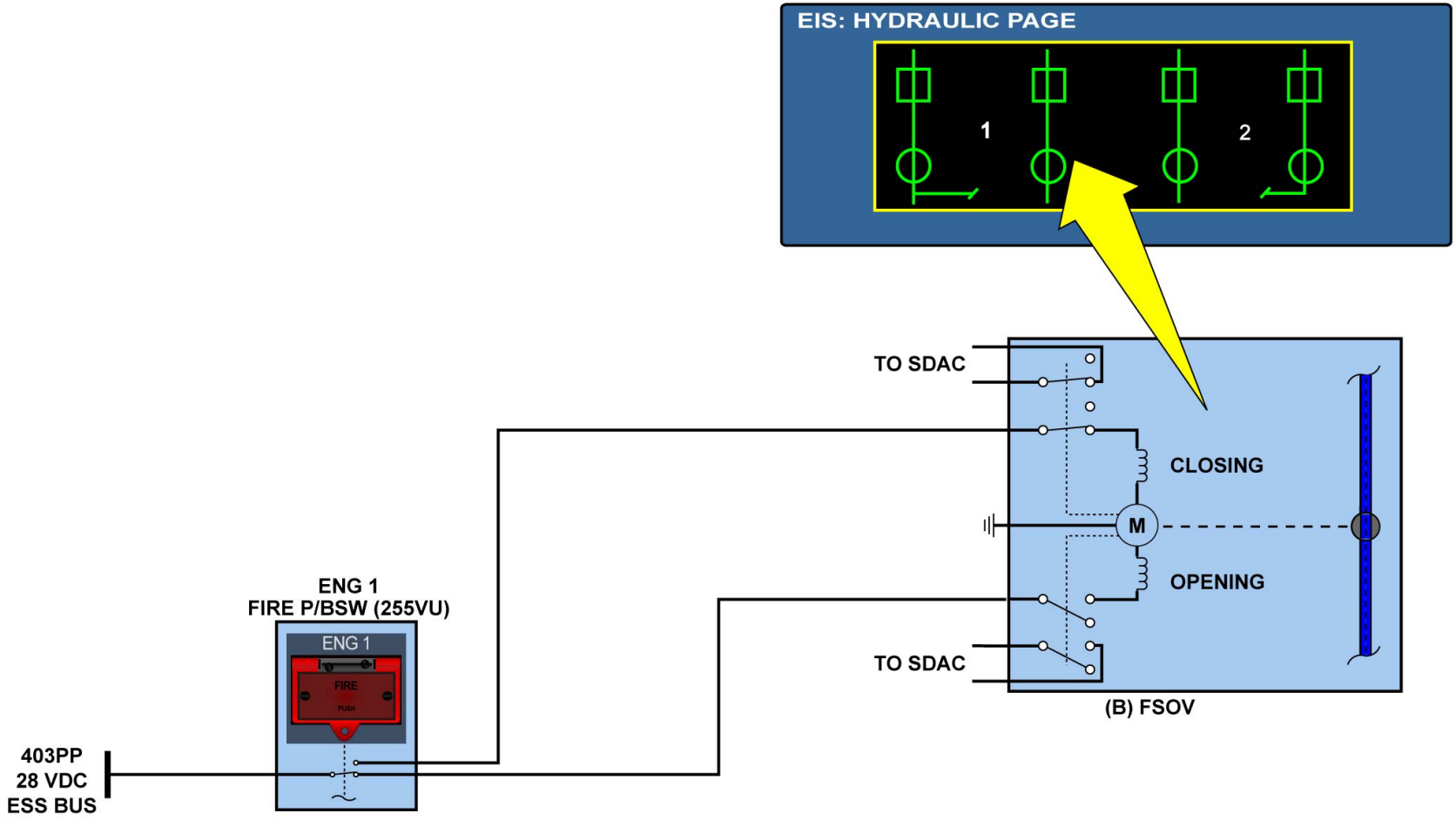

FIRE SOV LOGIC OPERATION

BLUE HYDRAULIC SYSTEM D/O (3)

EDP LOGIC OPERATION

As soon as engine 1 is running, the pump pressurizes the system to 3000 psi. A pressure switch monitors the output of each pump. If the pressure drops below 1750 psi, while the engine is running, the HSMU illuminates the FAULT indication on the engine P/BSW. The pressure switch also sends a signal to the SDAC for the ECAM indication and related warnings for a pump LP. The fault indication is inhibited when there is no signal from the Engine Electronic Controller (EEC). When the blue engine 1 pump P/BSW is set to OFF, the depressurization solenoid valve of the related pump is energized and the pump no longer supplies fluid. In this case, the related OFF legend comes on.

G7508471 - G3NT1T0 - FM29D200000003

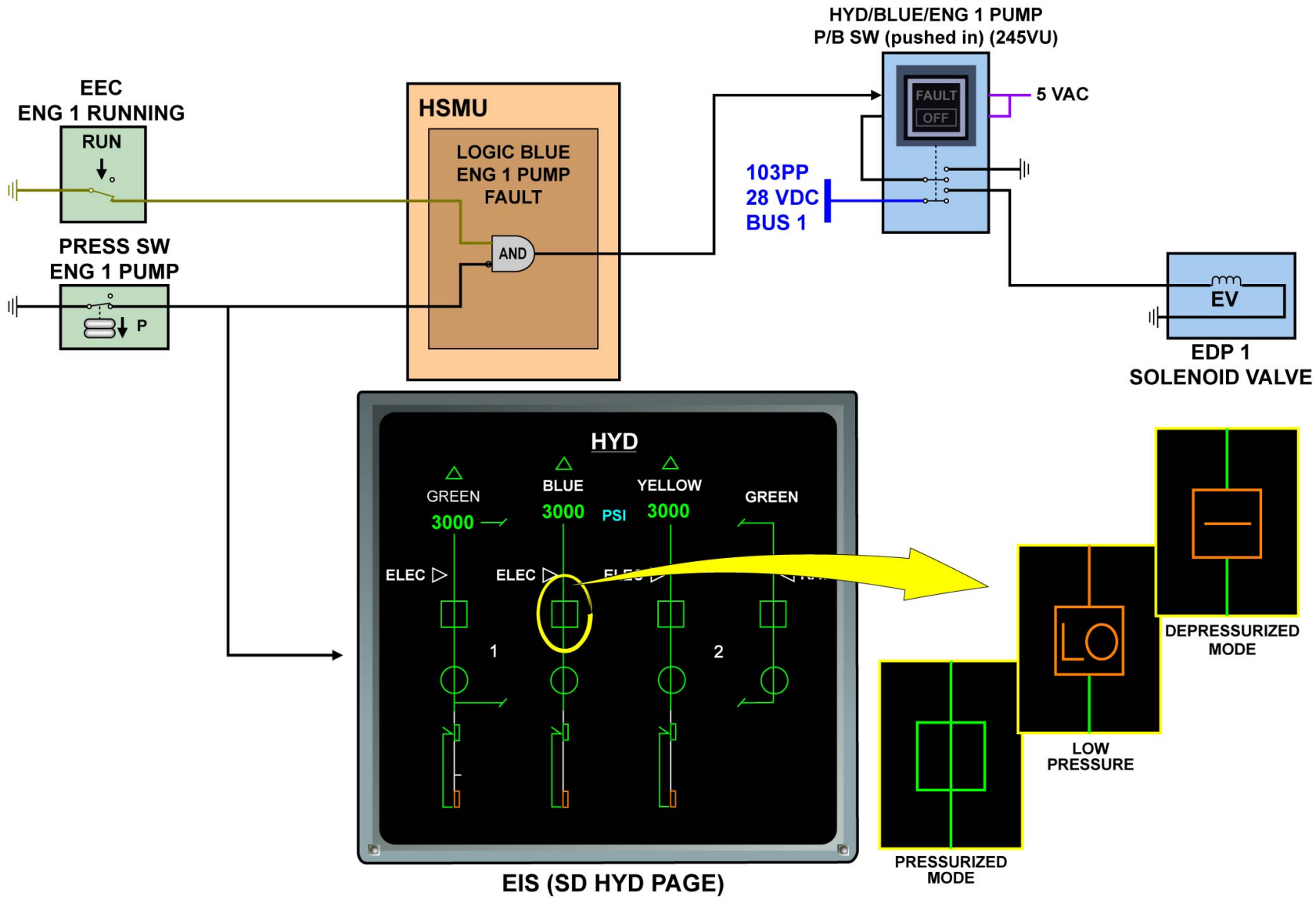

EDP LOGIC OPERATION

G7508471 - G3NT1T0 - FM29D200000003

BLUE HYDRAULIC SYSTEM D/O (3)

ELECTRIC PUMP LOGIC OPERATION

STAND-BY (PUMP OFF)

GENERAL:
The control of the blue electric pump operation relies on the P/BSW 4JC, 6JC, the HSMU and a RCCB (Remote Control Circuit Breaker). The motor of the blue electric pump is supplied from the 2XP3 bus (115VAC triphase) through the RCCB. The blue electric pump can be controlled either manually from the P/BSW 6JC or automatically by the HSMU.
STAND-BY CONFIGURATION:
In stand-by configuration the 28VDC electric pump control loop (4JC / 6JC / HSMU / RCCB) is open; the coil of the RCCB is de-energized; the RCCB is open; the electric pump motor is not supplied; the pump is stopped.

G7508471 - G3NT1T0 - FM29D200000003

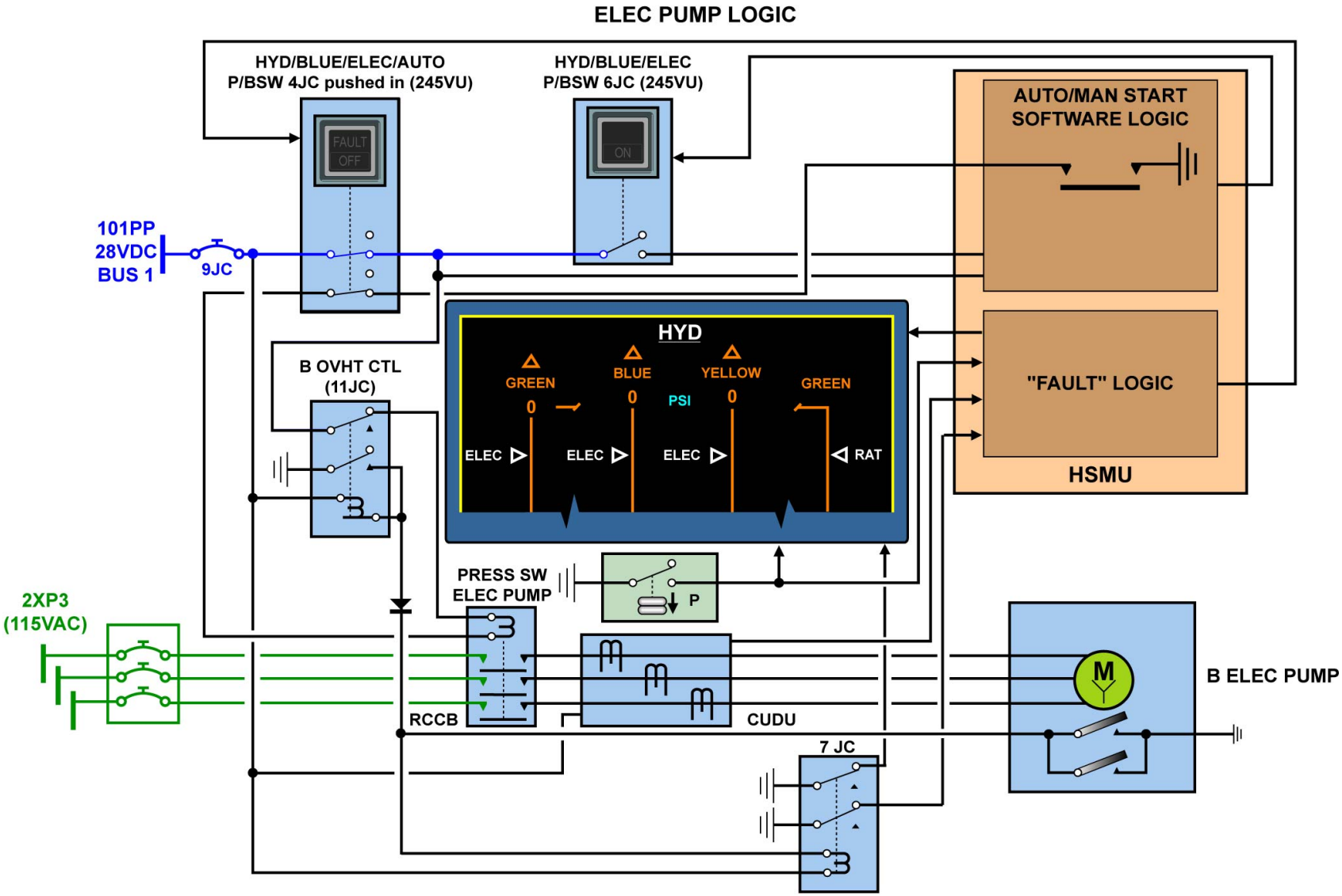

ELECTRIC PUMP LOGIC OPERATION - STAND-BY (PUMP OFF)

G7508471 - G3NT1T0 - FM29D200000003

BLUE HYDRAULIC SYSTEM D/O (3)

ELECTRIC PUMP LOGIC OPERATION (continued)

PUMP START

MANUAL START:
By pressing the 6JC pulse P/BSW the HSMU gets a +28 VDC signal. Getting this signal, by software logic, the HSMU closes the electrical pump control loop. The RCCB coil is energized; the RCCB closes; the electric pump motor is supplied by the 115 VAC; the pump starts running.
The HSMU also controls the illumination of the cyan ON legend on the 6JC pulse P/BSW.

G7508471 - G3NT1T0 - FM29D200000003

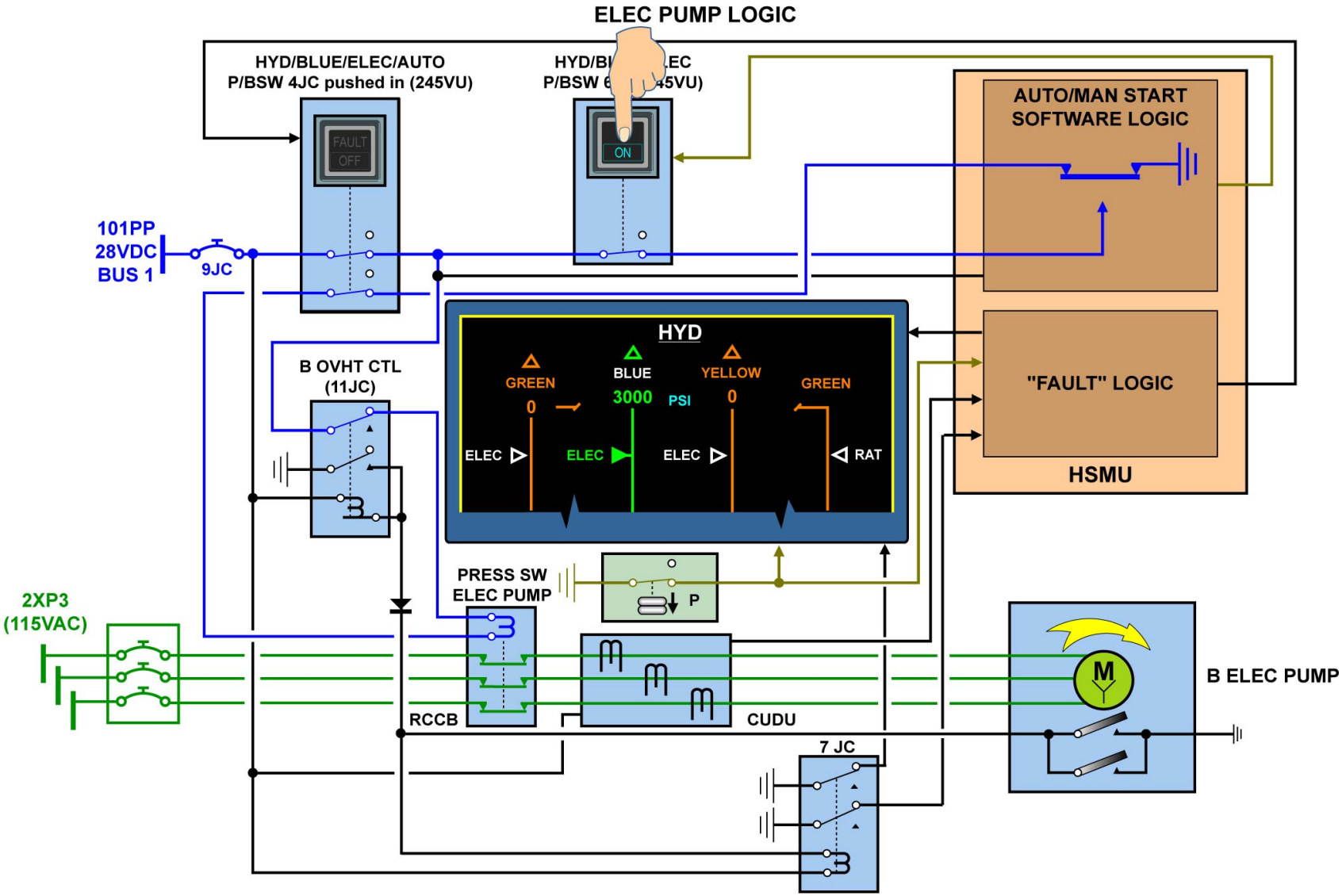

ELECTRIC PUMP LOGIC OPERATION - PUMP START

G7508471 - G3NT1T0 - FM29D200000003

BLUE HYDRAULIC SYSTEM D/O (3)

ELECTRIC PUMP LOGIC OPERATION (continued)

PUMP RUNNING

PUMP RUNNING:
When the 6JC pulse P/BSW is released the HSMU does not get any longer the +28VDC signal but, by software logic, keeps the electric pump control loop closed. The RCCB is kept energized closed; the electric pump keeps running; the cyan "ON" legend is kept illuminated by the HSMU.
MANUAL STOP:
By pressing again the 6JC pulse P/BSW while the electric pump is running the HSMU gets a new + 28 VDC signal. Getting this new signal, by software logic, the HSMU opens the electric pump control loop; the RCCB coil is de-energized; the RCCB opens; the electrical pump motor is no longer supplied by the 115 VAC; the pump stops running.
The HSMU also controls the cyan "ON" legend on the 6JC pulse P/BSW to extinguish.
AUTOMATIC CONTROL:
The blue electric pump can be controlled automatically by the HSMU. The control logic is as follows:
Aircraft in flight (input from LGCIU) and airspeed above 100 kts (input from ADIRU) AND engine 1 failed (HP compressor below 50 % input from EIVMU) AND FCPC 1 OR 3 inoperative/OFF (input from FCPC 2) AND flap/slat lever not in zero position (input from SFCC) => blue electric pump starts running.
The purpose of this logic is to provide the rudder surface with sufficient hydraulic power to reach the deflection needed to counteract the sideslip induced by the engine asymmetric thrust at low airspeed. Refer to the ATA 27 YAW presentation module for further information.

G7508471 - G3NT1T0 - FM29D200000003

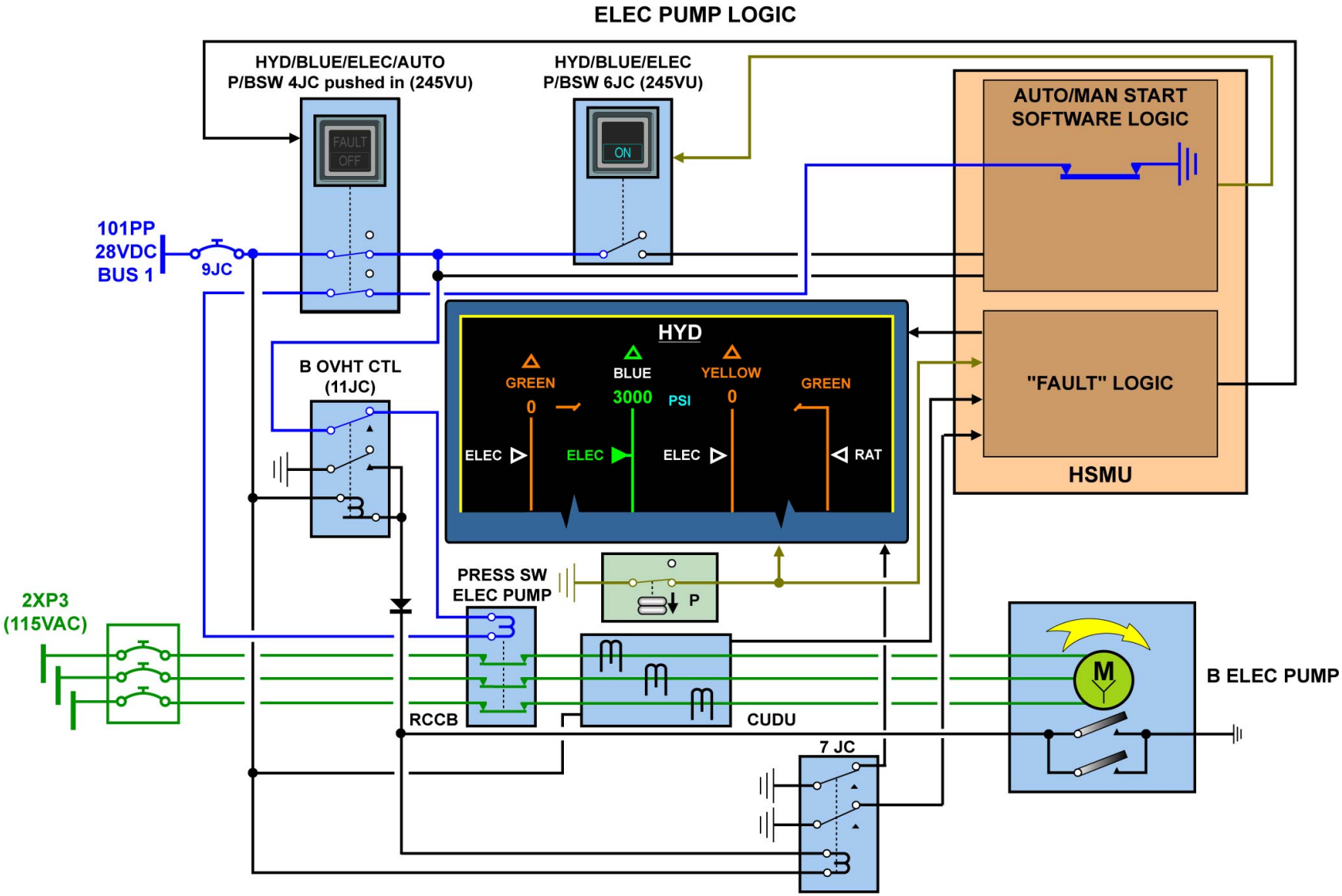

ELECTRIC PUMP LOGIC OPERATION - PUMP RUNNING

G7508471 - G3NT1T0 - FM29D200000003

BLUE HYDRAULIC SYSTEM D/O (3)

ELECTRIC PUMP LOGIC OPERATION (continued)

PUMP LOW PRESSURE

LOW PRESSURE:
The blue electric pump delivers hydraulic pressure. A pressure switch connected to the pressure line downstream of the pump monitors the hydraulic pressure.
During normal operation of the electric pump this pressure switch is closed sending to both, the EIS and the HSMU a ground signal.
If the delivered pressure drops below 1450 psi, the pressure switch opens; the ground signal from the pressure switch is lost by the EIS and the HSMU; the electric pump is displayed amber on the ECAM hydraulic system page by the EIS; the HSMU controls the amber FAULT legend on the 4JC P/BSW to illuminate.
These indications are inhibited if the electric pump is not commanded to run.
Note: The electric pump is not stopped automatically in case of low pressure being detected by the pressure switch. If it is stopped manually by releasing-out the 4JC P/BSW, the amber FAULT legend is extinguished by the HSMU, the white OFF legend illuminates, on the 4JC P/BSW and the cyan ON legend is extinguished on the 6JC P/BSW.

G7508471 - G3NT1T0 - FM29D200000003

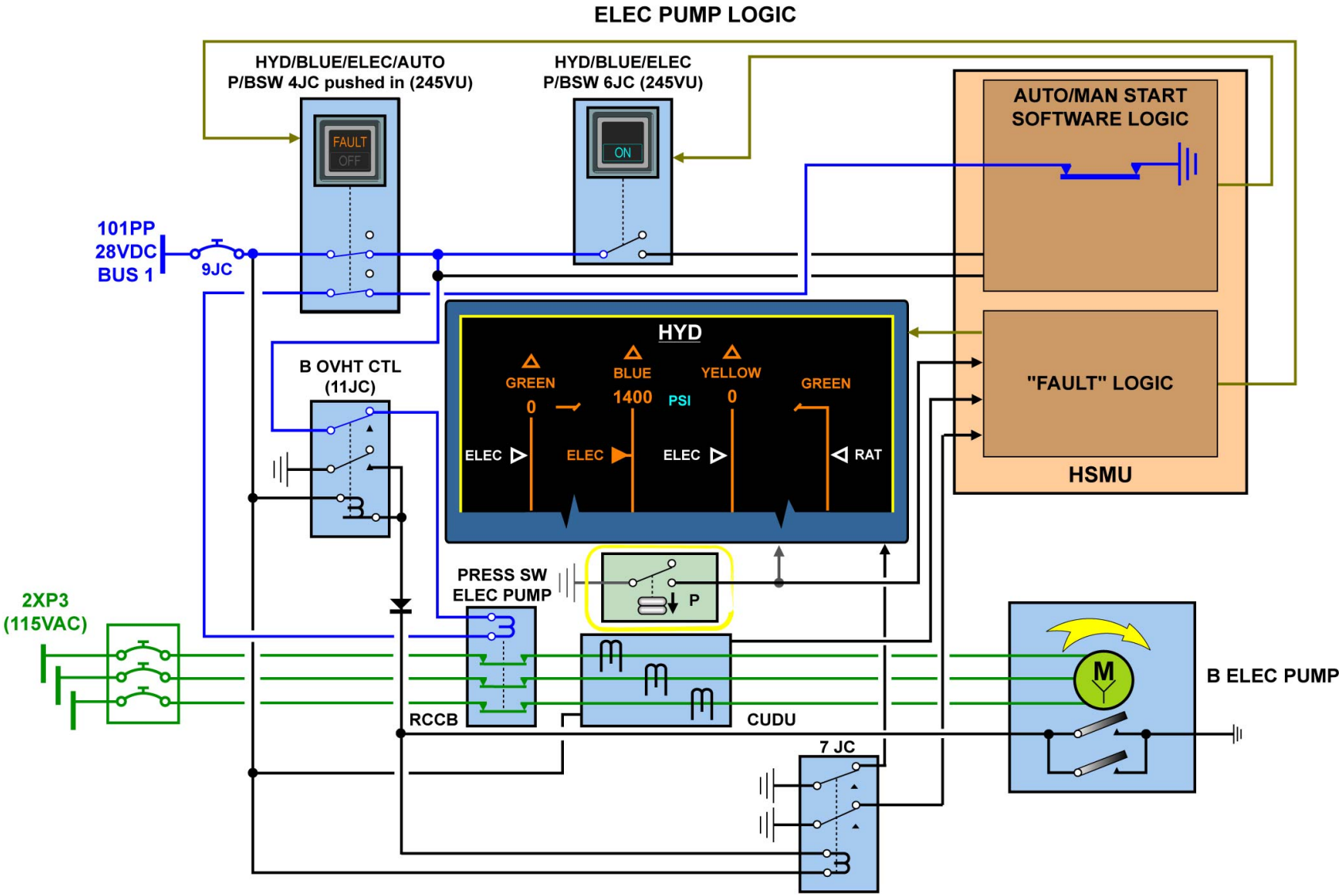

ELECTRIC PUMP LOGIC OPERATION - PUMP LOW PRESSURE

G7508471 - G3NT1T0 - FM29D200000003

BLUE HYDRAULIC SYSTEM D/O (3)

ELECTRIC PUMP LOGIC OPERATION (continued)

PUMP OVERHEAT

OVERHEAT:
In the event of a blue electric pump motor overheating, the electric pump stops automatically; related indications are displayed; electric pump further operation is inhibited (even after cool down); reset is only possible on the ground.
The above logic is independent from the HSMU software, it is performed by a dedicated external circuit including three components: a thermal switch installed in the motor of the electric pump, a self-holding type relay (B OVHT CTL 11JC) and an indication relay (7JC).
If the temperature of the electric pump motor reaches 230 deg.C (446 deg.F) the thermal switch closes; a ground is supplied to the coil of the relays 11JC and 7JC; both relays 11JC and 7JC are getting energized, they both open.
The opening of the relay 11JC causes the opening of the electric pump control loop; the RCCB coil is no longer energized, the RCCB opens; the motor of the electric pump is no longer supplied by the 115VAC; the electric pump stops running.
With the opening of the relay 7JC the ground signals received by the EIS and the HSMU are both lost; the EIS displays the electric pump in amber with the amber OVHT legend on the ECAM hydraulic system page; the amber FAULT legend is illuminated by the HSMU on the 4JC P/BSW. The cyan ON legend on the 6JC P/BSW is extinguished by the HSMU.
Note: If the 4JC P/BSW is released-out (as per ECAM procedure) the OFF white legend illuminates, but the amber FAULT legend is not extinguished by the HSMU.
When the temperature of the electric pump motor drops below the overheat threshold the thermal switch re-opens but the relay 11JC remains energized open (self-holding); the electric pump control loop is latched open making impossible any further start of the pump.
On the ground, reset of the 9JC C/B (not accessible in flight) makes possible to recover the control of the electric pump. Opening the 9JCC/B de-energizes the coil of the relay 11JC; the relay 11JC is unlatched and closes. After the 9 JC C/B has been closed the control loop of the electric pump is restored to the stand-by configuration.

G7508471 - G3NT1T0 - FM29D200000003

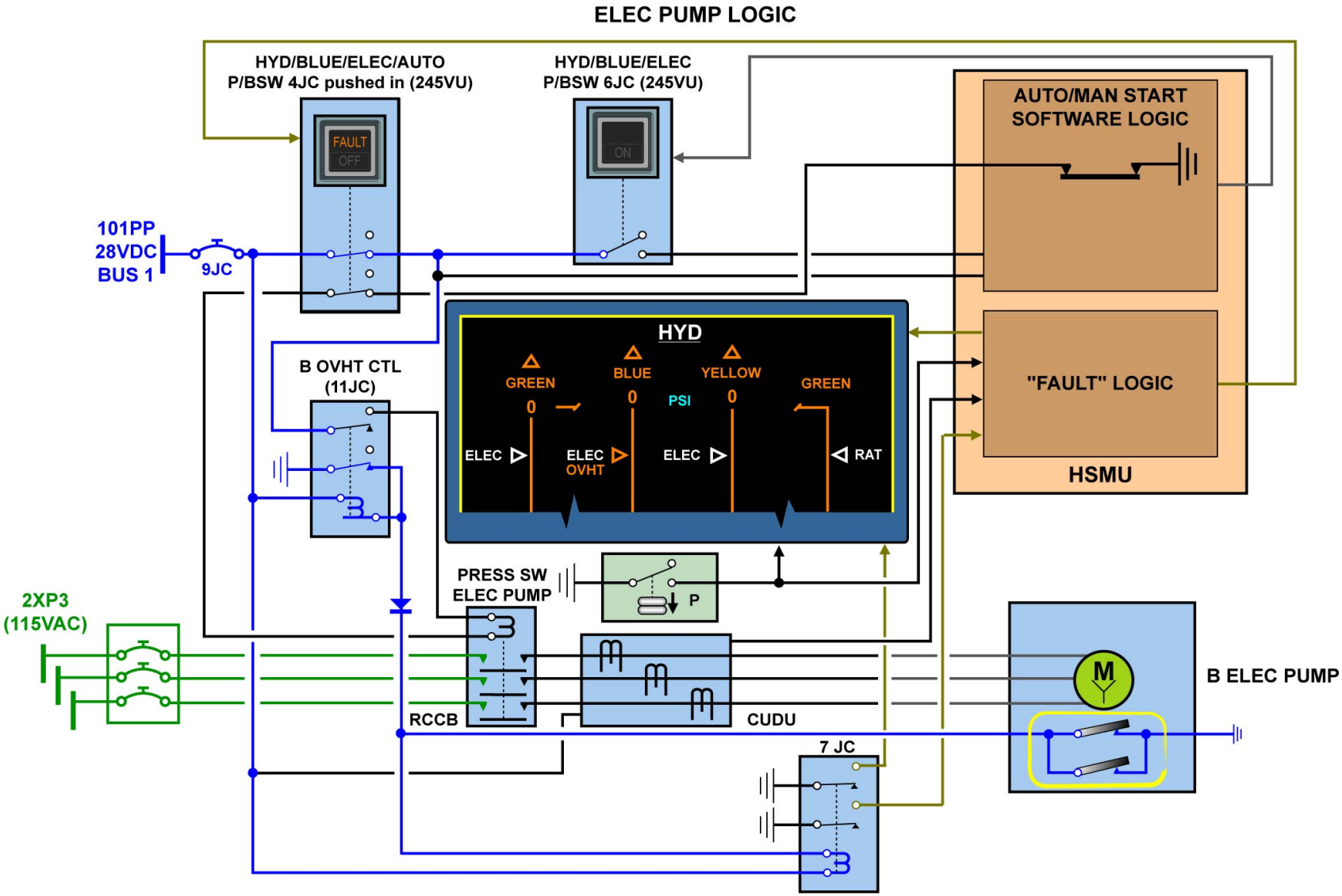

ELECTRIC PUMP LOGIC OPERATION - PUMP OVERHEAT

G7508471 - G3NT1T0 - FM29D200000003

BLUE HYDRAULIC SYSTEM D/O (3)

ELECTRIC PUMP LOGIC OPERATION (continued)

CURRENT UNBALANCE

UNBALANCE:
The 115 VAC triphase power supply of the electric pump is monitored by the CUDU (Current Unbalance Detection Unit). This component, based on the Hall effect sensor principle, measures and compares the electric currents of each individual phase of the electric pump power supply.
During normal operation of the electric pump, the currents of each individual phase are balanced.
In the event of a current unbalance between at least two phases, the CUDU signals the fault to the HSMU which, by software logic, opens the electric pump control loop; the RCCB is de-energized; the motor of the electric pump is no longer supplied; the electric pump stops running.
The fault signal sent to the HSMU is latched by the CUDU making it impossible any further start of the electric pump. To recover control of the electric pump the CUDU has to be de-powered / re-powered; this can be carried-out on the ground by a reset of the 9JC C/B.
In addition to the automatic stop of the pump, the HSMU also controls the amber FAULT legend to illuminate, on the 4JC P/BSW and the cyan ON legend to extinguish on the 6JC P/BSW.
Thanks to a test push-button on the CUDU, current unbalance condition can be simulated and automatic shut-down of the electric pump checked during maintenance.

G7508471 - G3NT1T0 - FM29D200000003

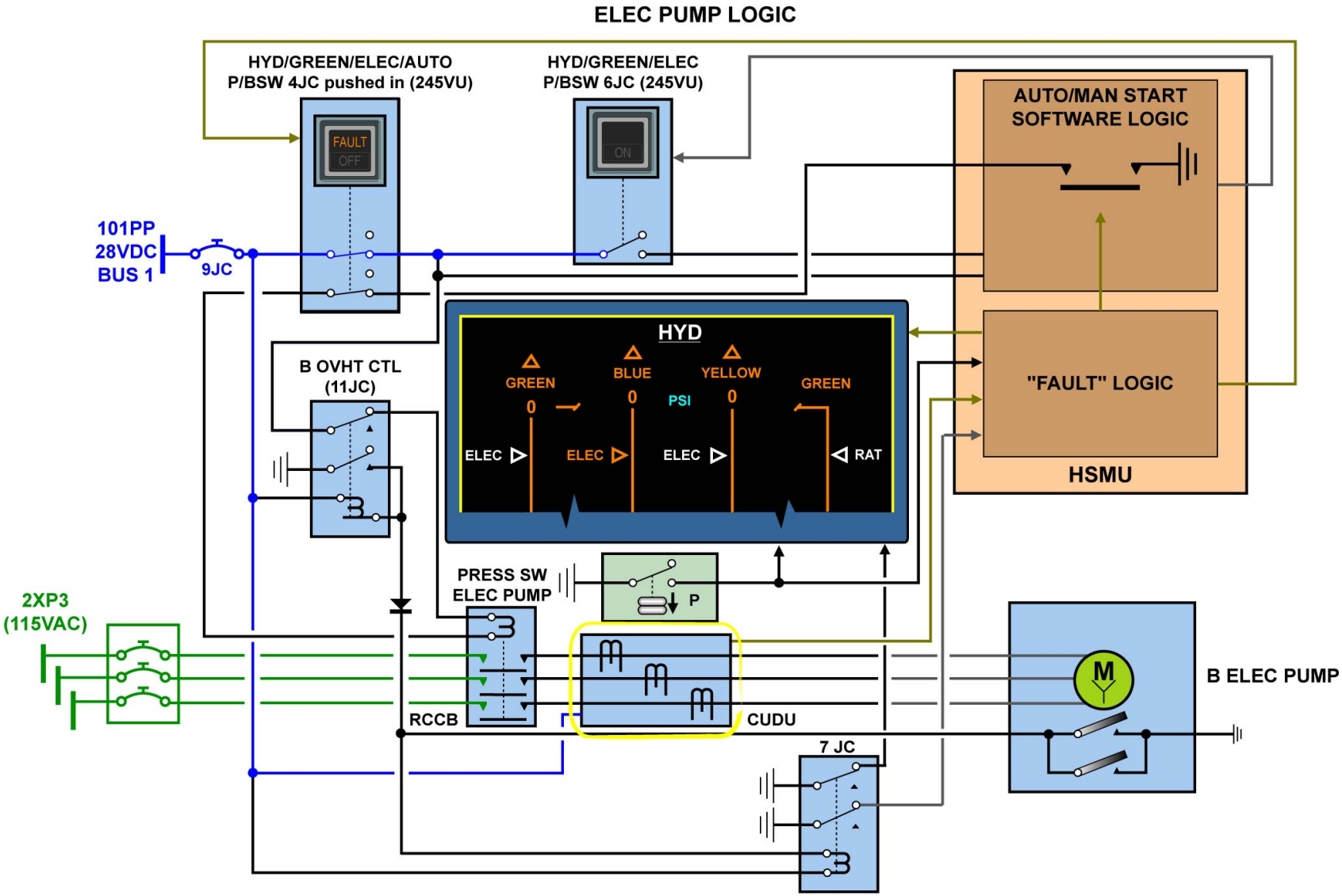

ELECTRIC PUMP LOGIC OPERATION - CURRENT UNBALANCE

G7508471 - G3NT1T0 - FM29D200000003

BLUE HYDRAULIC SYSTEM D/O (3)

CURRENT UNBALANCE DETECTOR UNITS (CUDU)

The CUDUs monitor the supply current of the electric pumps. They detect a current unbalance or the cut-off of one or two phases in the three phases power supply of the electric pumps. They send, to the HSMU, a signal to cut-off the power supply of the contactors related to the electric pumps when they detect an unbalance between the three phases. Switching off the power supply of the current unbalance detector units launches the reset.
A test pushbutton associated to an annunciator light comes on when the test has been done and the CUDU operates properly.

G7508471 - G3NT1T0 - FM29D200000003

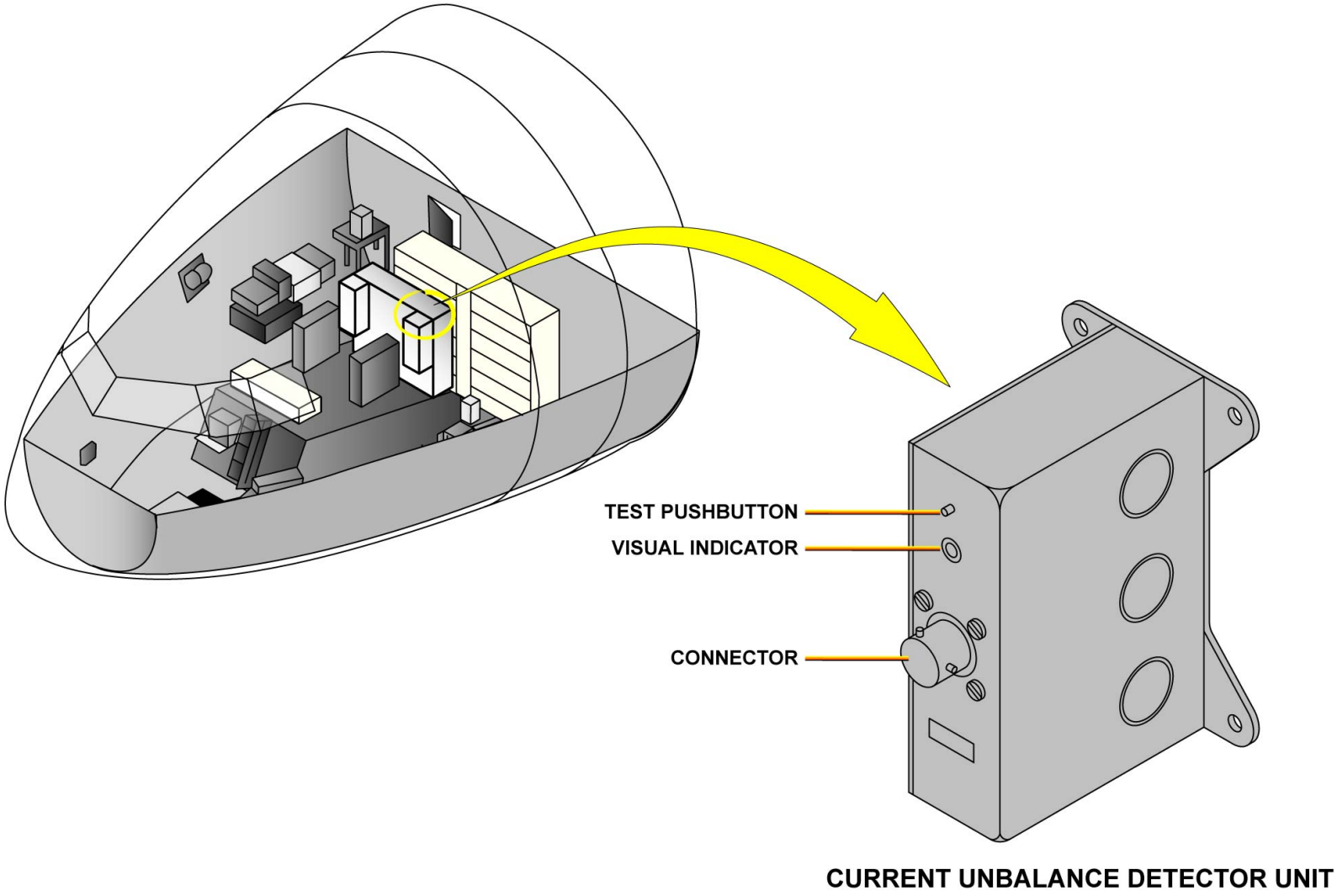

CURRENT UNBALANCE DETECTOR UNITS (CUDU)

G7508471 - G3NT1T0 - FM29D200000003

BLUE HYDRAULIC SYSTEM D/O (3)

DISTRIBUTION INDICATIONS

The pressure transmitter (6JS2) sends an analog signal which is used to give the hydraulic system pressure indication on the hydraulic SD system page. This same signal is also sent to the flight control system in order to give the pressure indication. The leak measurement solenoid valve is normally de-energized open. Selecting OFF, at the maintenance panel, will energize the valve to close off the supply to the flight control system. The solenoid power supply is inhibited in flight above 100 Kts using information from Air Data/Inertial Reference Units (ADIRUs) 1 & 3 and Landing Gear Control and Interface Units (LGCIUs).
The pressure switch (7JS2) sends a discrete signal, if the pressure is less than 1450 psi. This signal is used for ECAM indication on the hydraulic page and for warning messages. This signal is also used by the flight control system. The pressure switch (19CE2) only gives pressure information to the flight control system. The ground service manifold is used during the ground leak test, to selectively enable the hydraulic supply to the flight controls when the leak measurement valve is closed.

G7508471 - G3NT1T0 - FM29D200000003

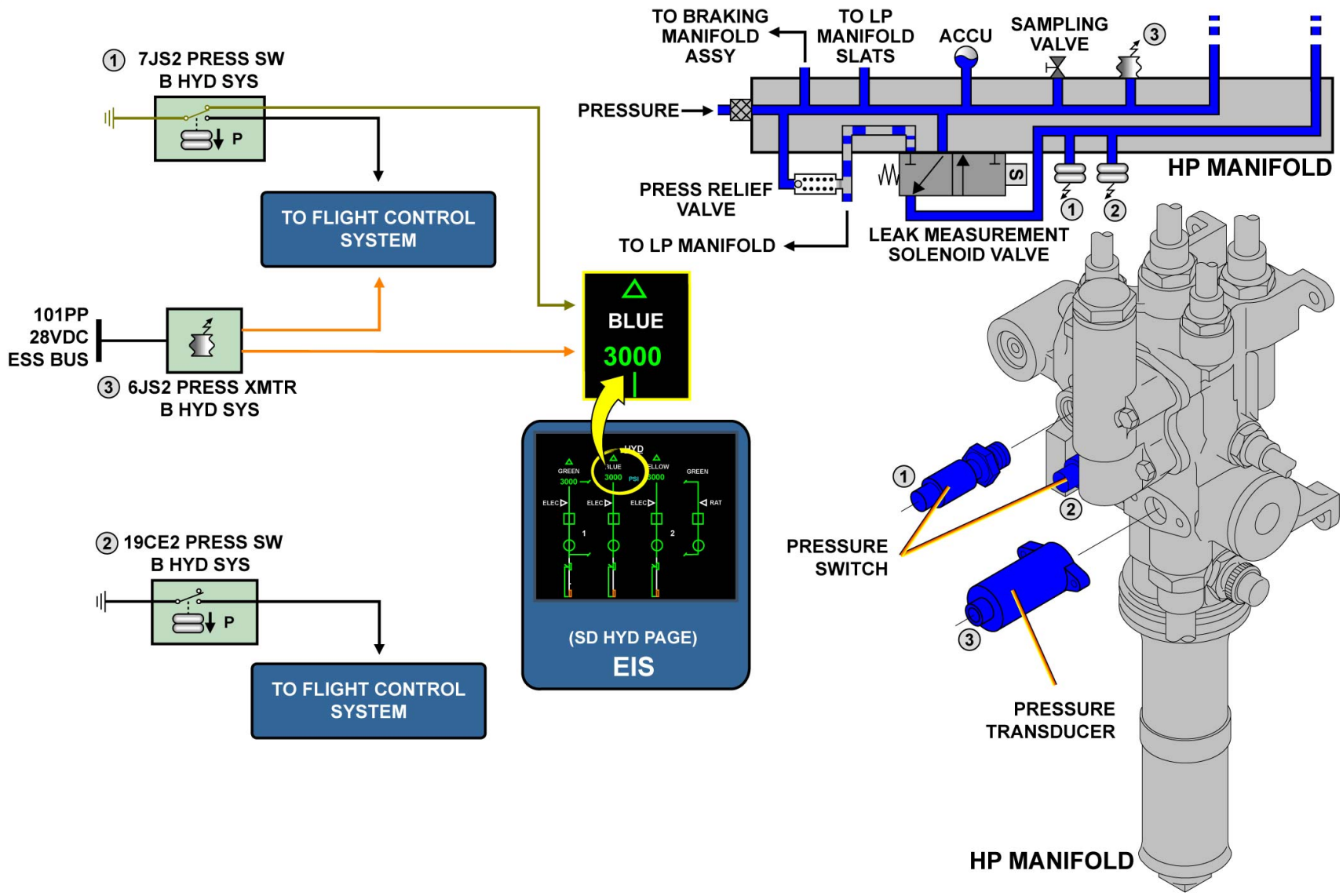

DISTRIBUTION INDICATIONS

YELLOW HYDRAULIC SYSTEM D/O (3)

SYSTEM DESCRIPTION

The yellow hydraulic system is pressurized via different components which will be described.

RESERVOIR

The reservoir is air-pressurized to 50 psi (in flight or on ground) in order to avoid cavitation of the hydraulic pumps. It is designed to remain pressurized for at least 12 hours. On the top of each reservoir, an air pressure switch monitors the air pressure inside the reservoir. A low level switch installed in the middle of each reservoir monitors the fluid quantity to activate a low level caution at 5 l remaining. An analog system, based on capacitive transmitters, permanently monitors the fluid level. A temperature transmitter installed on the return port of the reservoir, sends fluid temperature indication to the Hydraulic System Monitoring Unit (HSMU).

FIRE SHUT OFF VALVE (FSOV)

The Fire Shut Off Valve (FSOV) is composed of a ball valve and an electric motor. They are located outside the engine fire zone. The motor section contains limit switches for control and monitoring.

ENGINE DRIVEN PUMP (EDP)

The two-stage Engine Driven Pump (EDP) is controlled by a solenoid valve.

CASE DRAIN FILTER

Each EDP has a case drain line and a filter, which is of the non-bypassing type. There is also a clogging indicator set to operate at 87 psi.

ELECTRIC PUMP

The two-stage electrical pump is controlled by the HSMU. It is monitored for overheat conditions and for phase unbalance detection through the Current Unbalance Detection Unit (CUDU).

GROUND CONNECTORS

For maintenance purposes, ground self-sealing connectors are installed on the service panel.

RETURN FILTER

The LP return filter is of the bypassing type. It has a clogging indicator set to operate at 73 psi.

G7508471 - G3NT1T0 - FM29D300000003

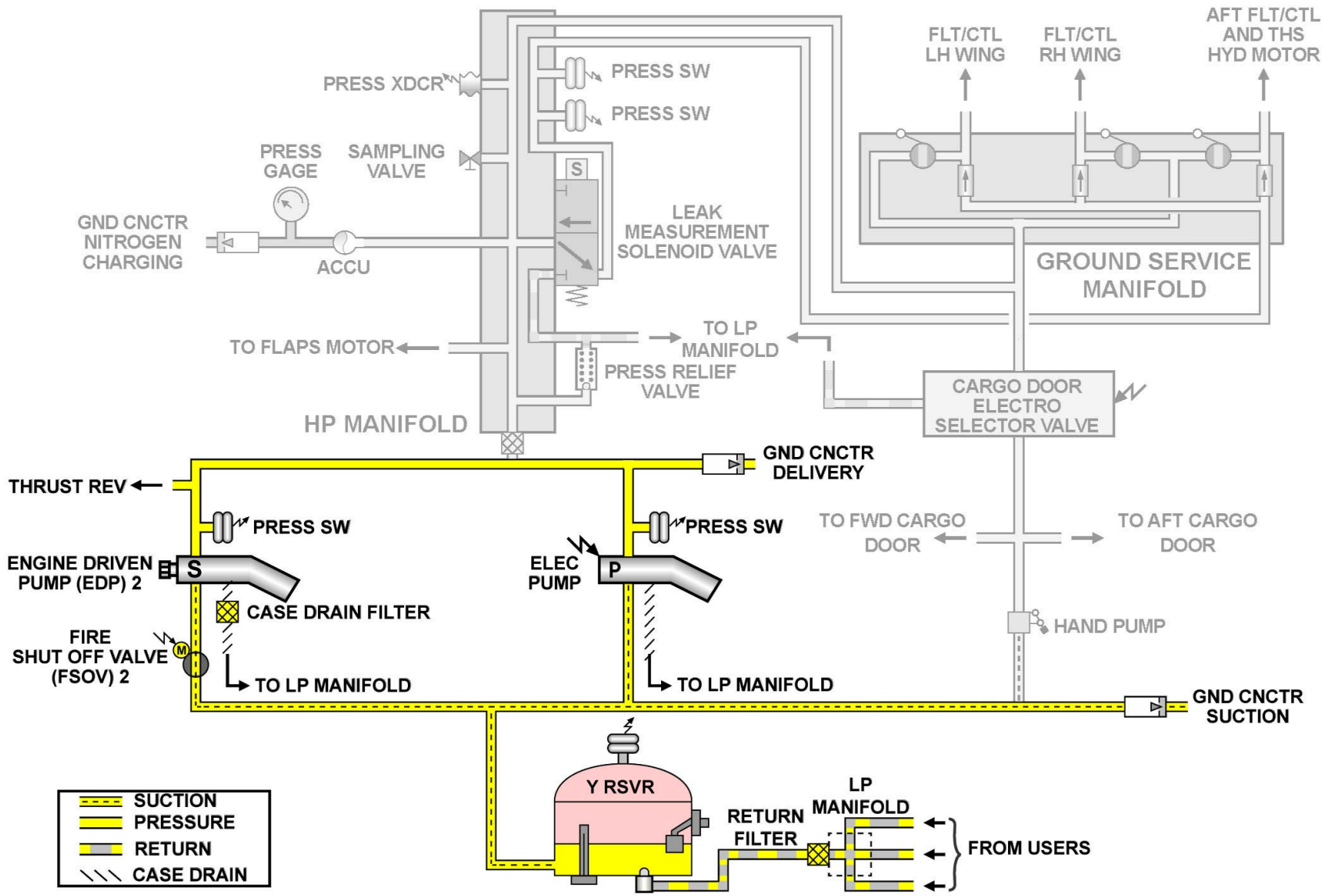

SYSTEM DESCRIPTION - RESERVOIR ... RETURN FILTER

G7508471 - G3NT1T0 - FM29D300000003

YELLOW HYDRAULIC SYSTEM D/O (3)

SYSTEM DESCRIPTION (continued)

ACCUMULATOR

The power accumulator damps the pump delivery pulsations and any pressure surges. It also compensates for pump response time in the event of high flow demand. It is installed in vertical position and has two ports, a gas port at the upper end and a fluid port at the lower end. The gas port is connected via a pipe to a nitrogen-charging ground connector and a direct-reading pressure gage located on the yellow service panel.

G7508471 - G3NT1T0 - FM29D300000003

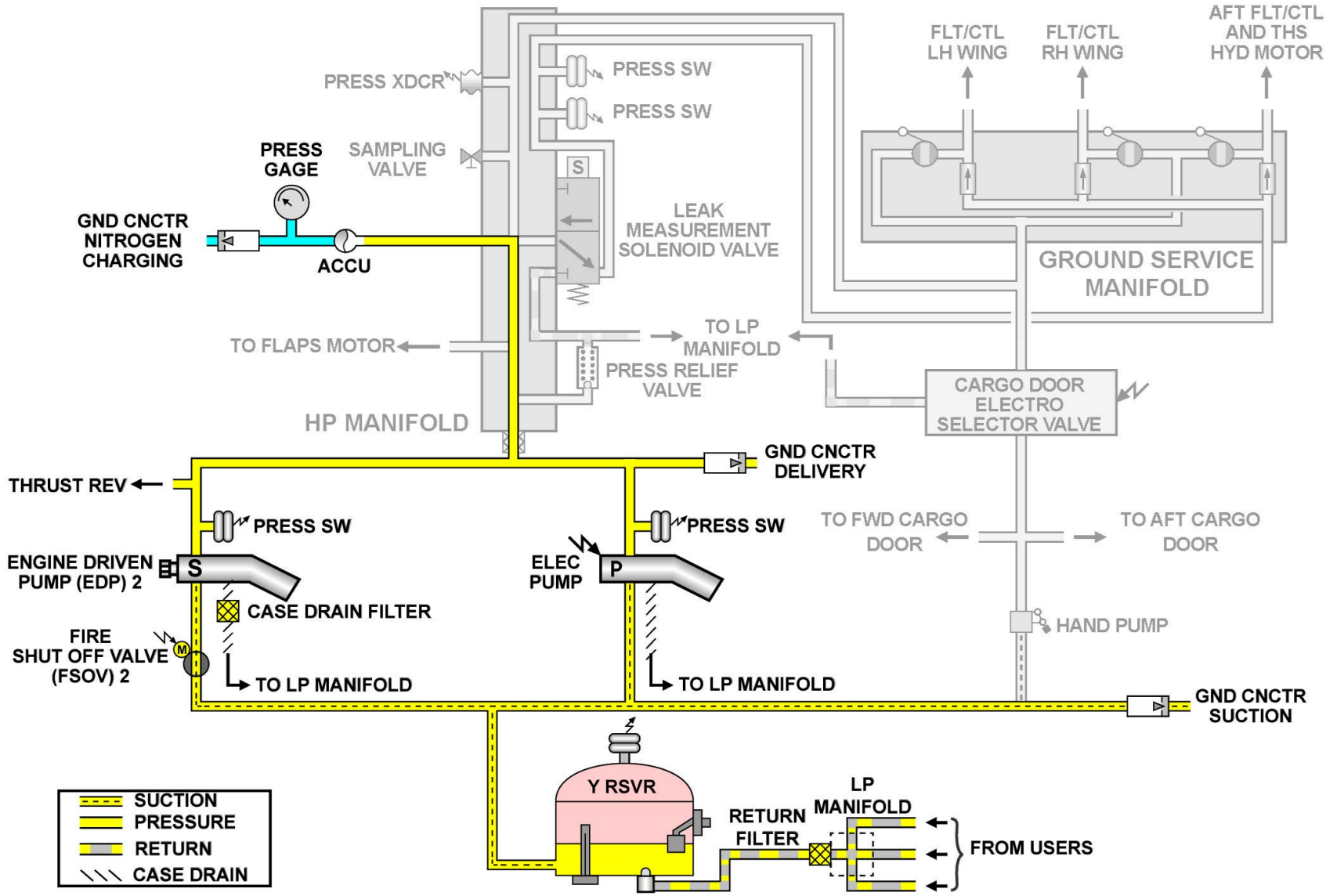

SYSTEM DESCRIPTION - ACCUMULATOR

G7508471 - G3NT1T0 - FM29D300000003

YELLOW HYDRAULIC SYSTEM D/O (3)

SYSTEM DESCRIPTION (continued)

HP MANIFOLD

The yellow HP manifold supplies the flight control users through the yellow ground service manifold. The yellow HP manifold includes various components. The HP filter is of the non-bypassing type with a clogging indicator set to operate at 87 psi. A pressure relief valve returns the fluid directly to the reservoir in overpressure condition. A leak measurement solenoid valve can be shut in order to isolate the supply to the flight controls, when the A/C is on ground. The sampling valve is used to take samples of hydraulic fluid to monitor for contamination. A pressure transducer and two pressure switches give pressure information to the ECAM and flight control computers.

CAUTION: When sampling, let the fluid run for a moment into a container, then put 0.2L (0.05USGal) of fluid into an appropriate bottle for analysis.

GROUND SERVICE MANIFOLD

The ground service manifold supplies the flight controls of the RH wing, LH wing and tail section via three outputs. After closing the related leak measurement valve, operating manually a valve allows the associated section to be supplied for leak measurement testing.

G7508471 - G3NT1T0 - FM29D300000003

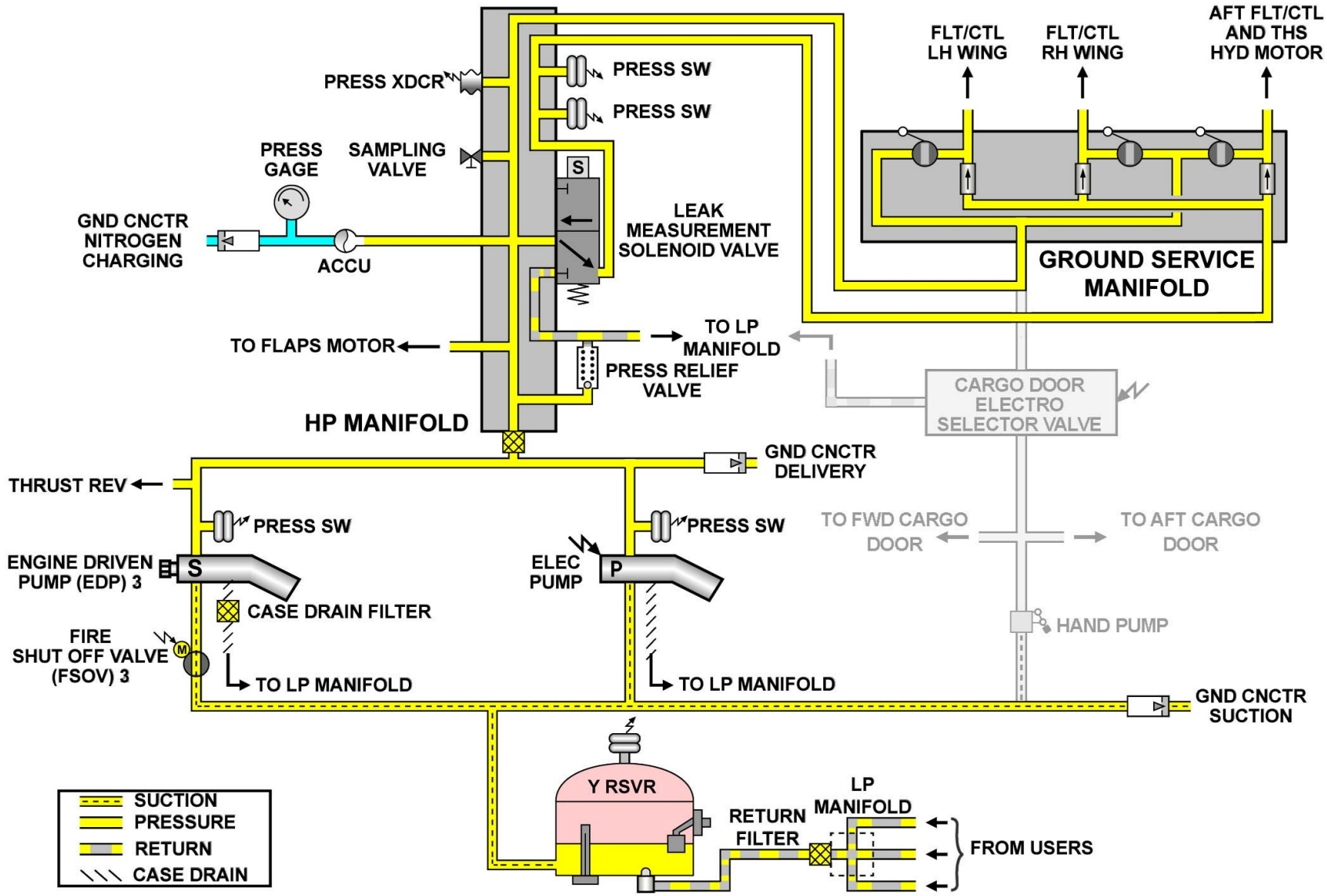

SYSTEM DESCRIPTION - HP MANIFOLD & GROUND SERVICE MANIFOLD

G7508471 - G3NT1T0 - FM29D300000003

YELLOW HYDRAULIC SYSTEM D/O (3)

SYSTEM DESCRIPTION (continued)

CARGO DOOR ELECTRO SELECTOR VALVE

The cargo door electro selector valve connects the yellow electric pump hydraulic supply to the cargo door system following a cargo door OPEN/SHUT selection.

HAND PUMP

The double-acting hand pump is only for cargo door operation. The handle is stowed on the green service panel.

G7508471 - G3NT1T0 - FM29D300000003

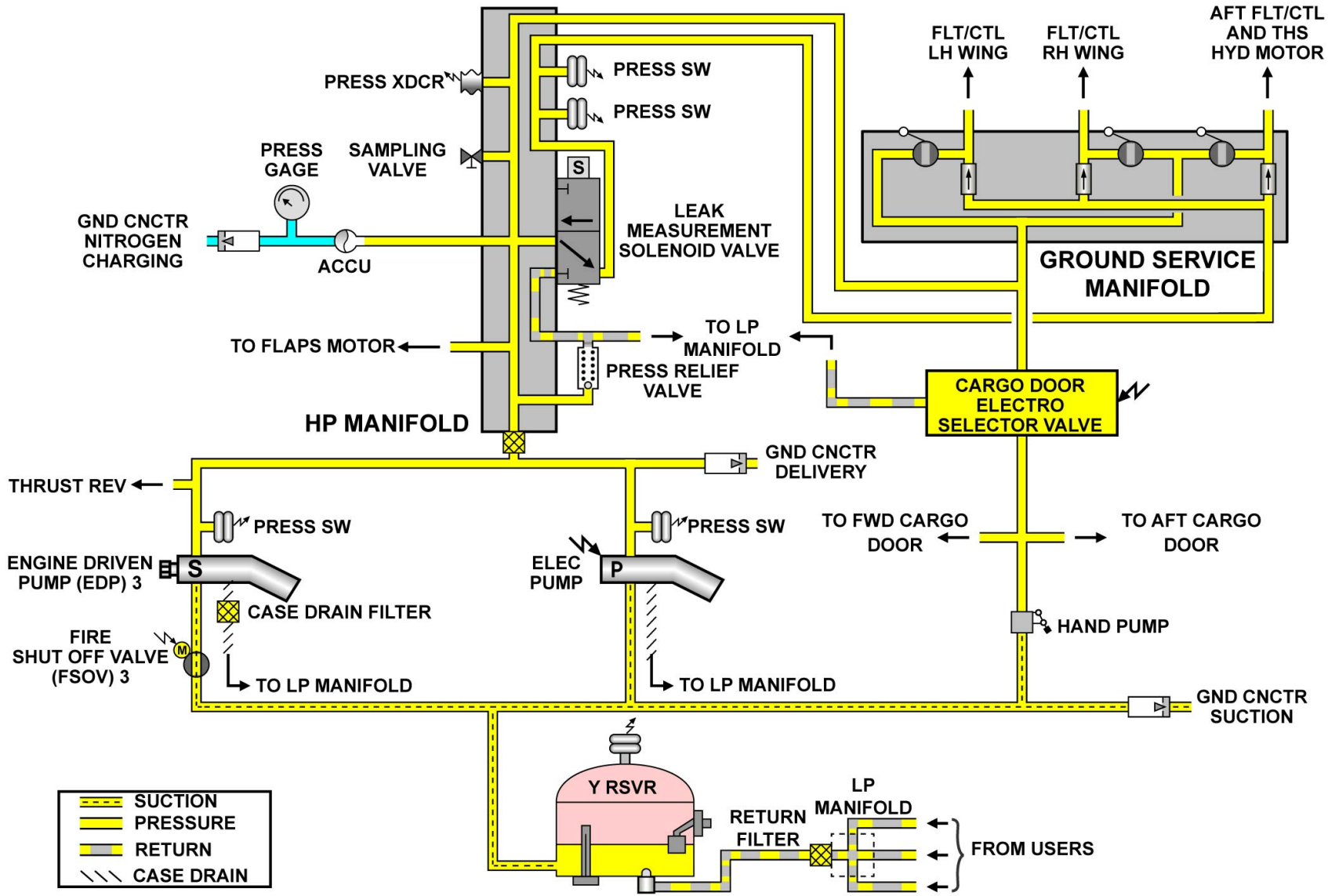

SYSTEM DESCRIPTION - CARGO DOOR ELECTRO SELECTOR VALVE & HAND PUMP

G7508471 - G3NT1T0 - FM29D300000003

YELLOW HYDRAULIC SYSTEM D/O (3)

RESERVOIR

The air pressure switch sends a discrete signal to the HSMU and System Data Acquisition Concentrators (SDACs) when the air pressure in the reservoir drops below 22 psi. The HSMU uses this signal for its internal logic and controls the FAULT legends on the yellow HYD P/BSW. The same signal is used by the SDACs for ECAM indication and associated warning. When the air pressure rises above 25 psi, the FAULT legends go off.

A quantity transmitter elaborates a 1 to 9 V analog signal, which corresponds to the level of fluid in the reservoir. When a low level is detected, the low level switch sends a discrete signal to the HSMU and SDACs. The HSMU uses this signal for its internal logic and to control the FAULT legend on the yellow HYD P/BSW. The same signal is used by the SDACs for the ECAM indication and related warning.

The temperature transmitter sends its analog information to the HSMU. The computer converts the received signal into a voltage with a range from 1 to 9 V. This signal is used for temperature compensation of the ECAM fluid level fill band, and overheat detection. (1 V equals to -60ºC, 9 V equals to +120ºC).

When the fluid temperature reaches 95ºC, the HSMU generates an overheat signal and the FAULT legends comes on, on the yellow HYD P/BSW. A copy of this overheat signal is also sent to the SDACs for the ECAM indication and associated warning.

NOTE: Note: The amber OVHT message stays on as long as the sensor detects the overheat.

From the fluid temperature and level gage signals, the HSMU elaborates a 1 to 9 V analog signal, which agrees with the reservoir filling correction to make. These signals are sent to the filling correction indicator, located on the green ground service panel, via the filling selector valve.

G7508471 - G3NT1T0 - FM29D300000003

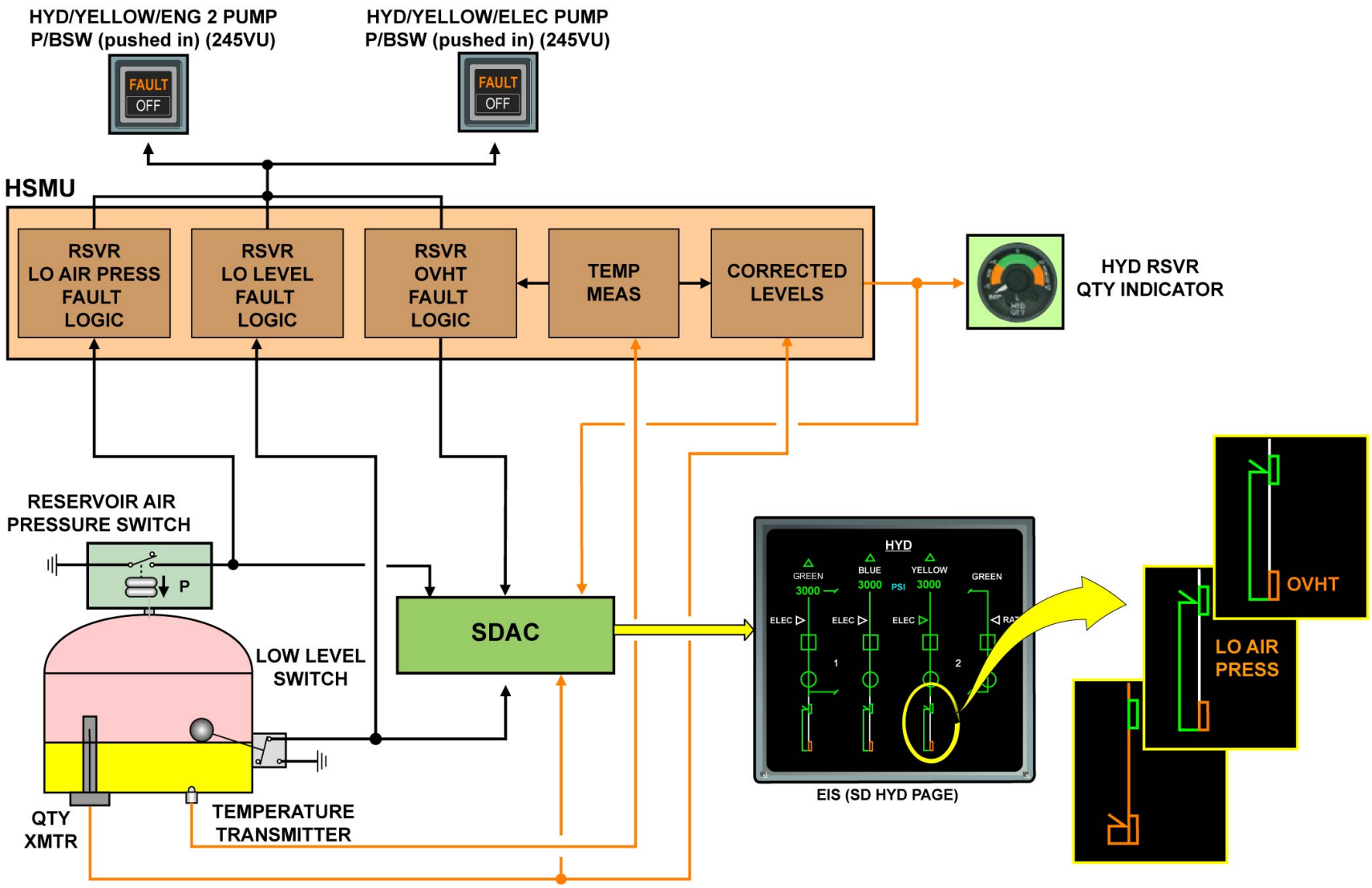

RESERVOIR

G7508471 - G3NT1T0 - FM29D300000003

YELLOW HYDRAULIC SYSTEM D/O (3)

FSOV OPERATION

The engine 2 FSOV is powered by 28 VDC either from BUS 2 or from the ESS BUS. In case of engine fire, the crew closes the engine 2 FSOV.

G7508471 - G3NT1T0 - FM29D300000003

FSOV LOGIC

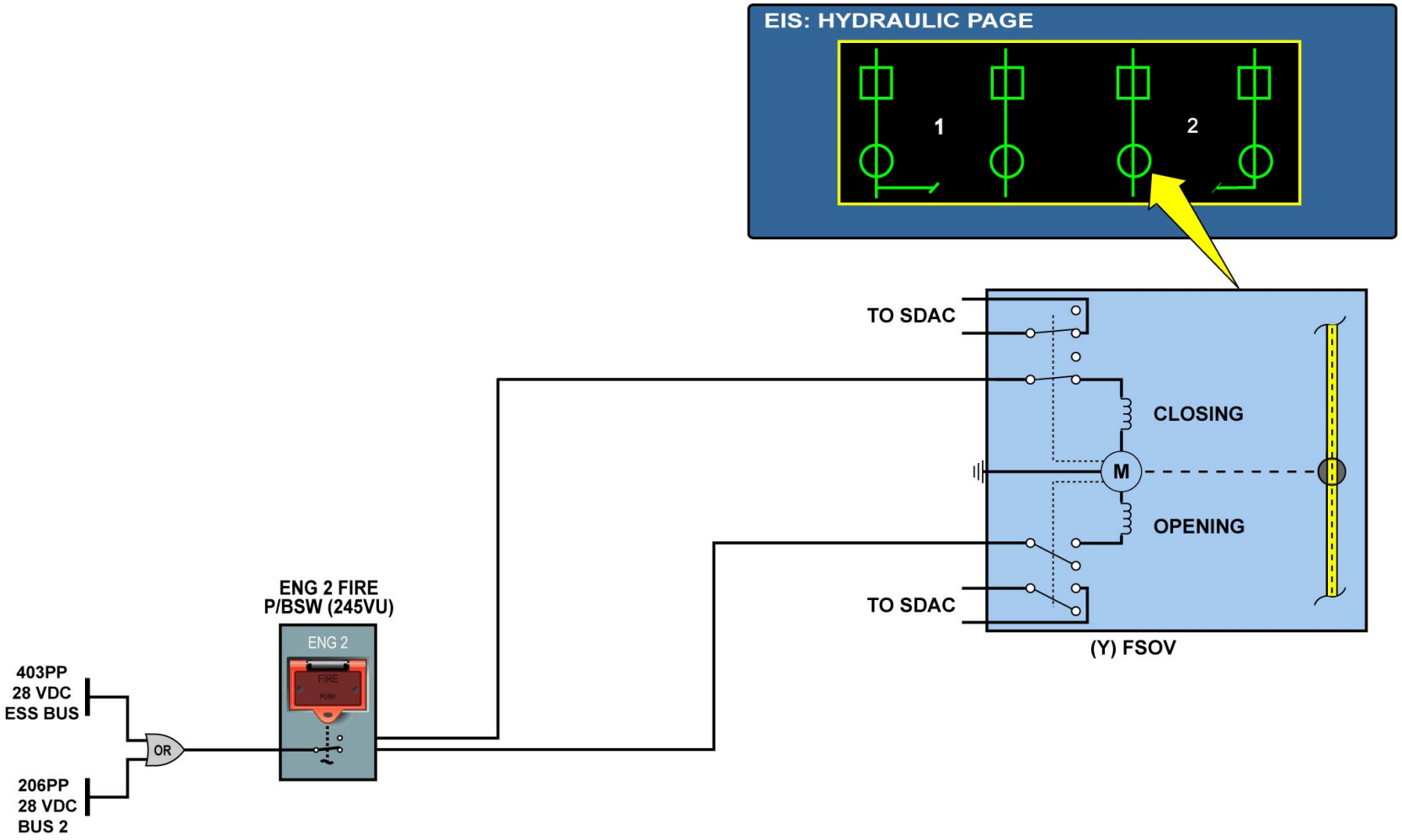

FSOV OPERATION

G7508471 - G3NT1T0 - FM29D300000003

YELLOW HYDRAULIC SYSTEM D/O (3)

EDP LOGIC OPERATION

As soon as engine 2 is running, the pump pressurizes the system to 3000 psi. A pressure switch monitors the output pressure. If the pressure drops below 1750 psi while the engine is running, the HSMU triggers the FAULT indication on the yellow HYD ENG 2 pump P/BSW. The pressure switch also sends a pump low pressure signal to the SDAC for the ECAM indication and related warnings activation. The FAULT indication is inhibited when there is no signal from the Engine Electronic Controller (EEC). When the yellow HYD ENG 2 pump P/BSW is released out, the depressurization solenoid valve of the related pump is energized and the pump no longer supplies fluid. In this case the related OFF legend comes on.

G7508471 - G3NT1T0 - FM29D300000003

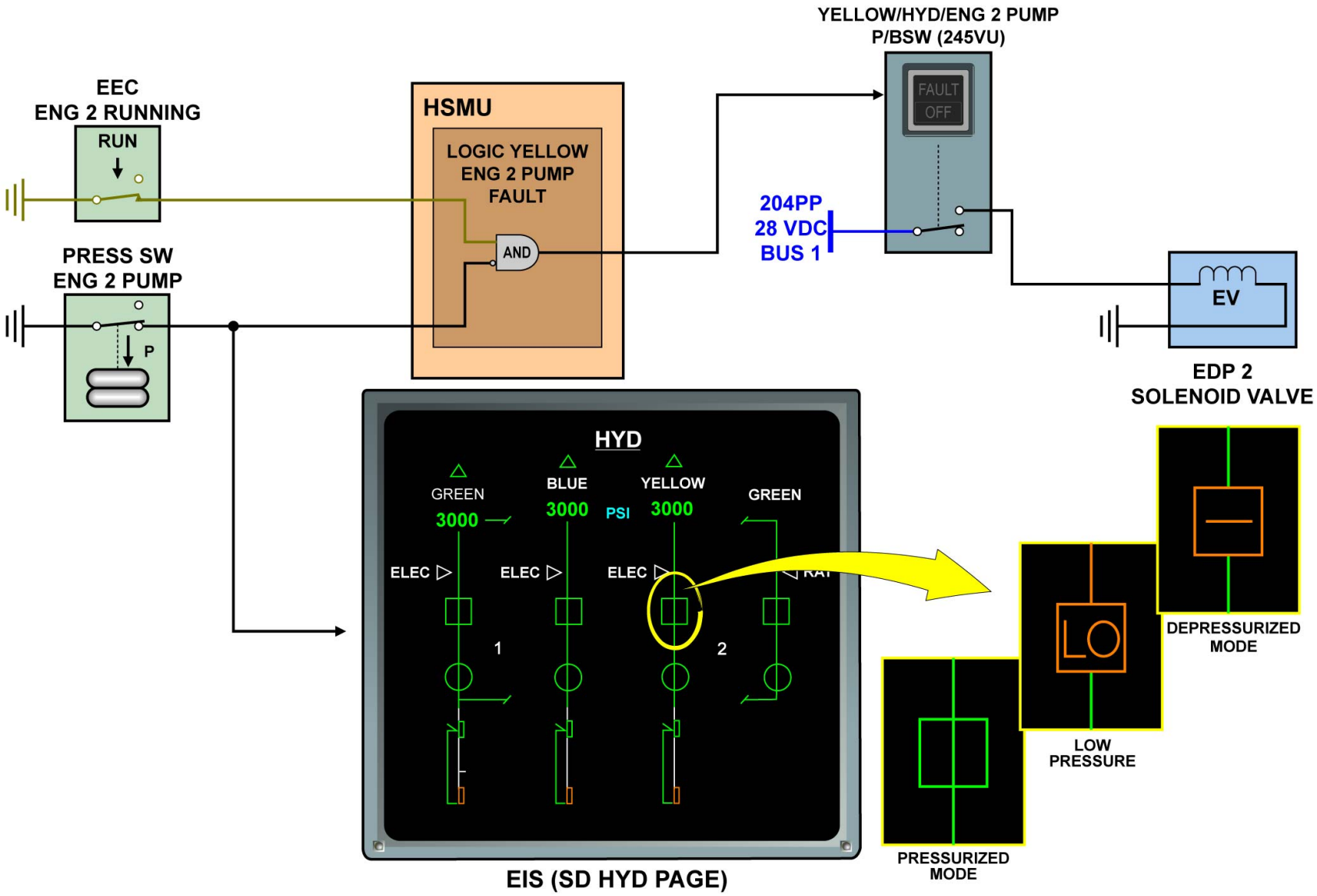

EDP LOGIC OPERATION

G7508471 - G3NT1T0 - FM29D300000003

YELLOW HYDRAULIC SYSTEM D/O (3)

ELEC PUMP AUTO START - CARGO DOOR OPS (MAINT BUS "ON")

GENERAL:
Manual control, low pressure monitoring, overheat monitoring and current unbalance monitoring of the yellow electric pump are not described in this topic due to similarity with the green and blue electric pumps. The topics describing these functions in detail for the green and blue electric pumps can be referred to for the yellow electric pump. Only the specific automatic control of the yellow electric pump is described below.
AUTOMATIC CONTROL:
The yellow electric pump can be controlled automatically by the HSMU. The control logics are as follows:
Flight logic:
Aircraft in flight (input from LGCIU) AND airspeed above 100 kts (input from ADIRU) AND engine 2 failed (HP compressor below 50% input from EIVMU) AND flap/slat lever not at zero AND green electrical pump not running automatically for landing gear retraction => yellow electric pump starts and keeps running until last engine shut down.
The purpose of this logic is to ensure that, with engine 2 failed (yellow hydraulic system not pressurized by the yellow EDP), the flap retraction does not last longer than in normal configuration with two engines running. Experiencing the aerodynamic drag of the flaps in-transit configuration during an abnormal long time would not be compatible with the loss of engine thrust.
Ground logic:
The yellow electric pump is controlled automatically by the HSMU during FWD and/or AFT cargo door operation in order to supply the cargo doors hydraulic actuators.
Automatic start of the yellow electric pump is controlled by the HSMU when a cargo door operation lever (FWD and/or AFT) is set to OPEN or CLOSE.
The pump is kept running by the HSMU for 10 seconds after the cargo door lever is released to the STOP position.
When the yellow electric pump is running automatically for cargo door operation, for safety reasons, the HSMU closes the yellow Leak Measurement Valve (LMV) to prevent movement of the related primary flight control surfaces and outputs a signal to the SFCC2 for inhibition of flap operation.
Note (for RR and PW engines only): During cargo doors operation, the engine 2 thrust reverser is the only yellow system device which is not inhibited automatically.
If the 4JJ P/BSW is in the normal pressed-in position, automatic control of the yellow electric pump for cargo door operation is possible whatever the aircraft electrical status, energized or not.
A/C NOT ENERGIZED:
If the aircraft is not energized (external power AVAIL in the cockpit but not switched ON), the automatic start logic of the yellow electric pump for cargo door operation is only available if the MAINT BUS is switched ON in the cabin (toggle switch on 5001VE panel). In this case the 28 VDC electric pump control loop is supplied from the 601PP SERV BUS.
When a cargo door operation lever is set to OPEN or CLOSE the Proximity Switch Control Unit (PSCU 5MJ, refer to ATA 52 presentation) energizes the CARGO DOOR RELAY; this relay closes; the HSMU gets a +28 VDC signal through the 8JJ PWR SPLY relay (de-energized open) and through the 4JJ P/BSW; by software logic, the HSMU closes the electrical pump control loop; the RCCB 3JJ2 is energized; it closes; the motor of the electric pump is supplied directly from the GPU; the electric pump runs.
The HSMU also illuminates the cyan ON legend on the 6JJ P/BSW.
When the cargo door operation lever is released to the STOP position, the CARGO DOOR RELAY is de-energized by the PSCU; the + 28VDC signal is no longer received by the HSMU but the electric pump control loop is kept closed (so the pump running) for 10 seconds. After this time delay the HSMU opens the control loop. The RCCB 3JJ2 is de-energized,

G7508471 - G3NT1T0 - FM29D300000003

it opens; the pump motor is no longer supplied from the GPU; it stops running.
The HSMU also extinguishes the cyan ON legend on the 6JJ P/BSW.

G7508471 - G3NT1T0 - FM29D300000003

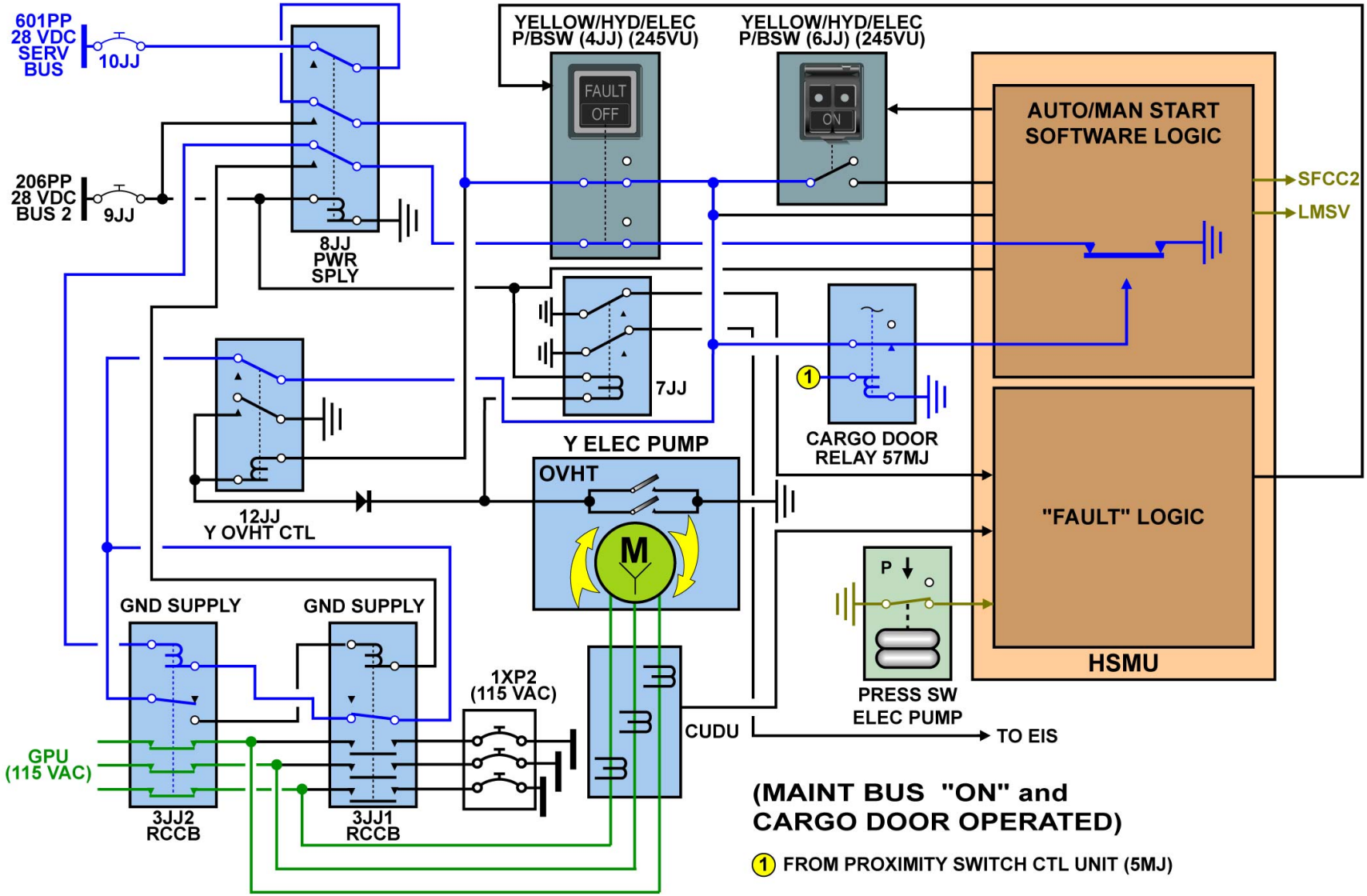

ELEC PUMP AUTO START - CARGO DOOR OPS (MAINT BUS "ON")

G7508471 - G3NT1T0 - FM29D300000003

This Page Intentionally Left Blank

G7508471 - G3NT1T0 - FM29D300000003

YELLOW HYDRAULIC SYSTEM D/O (3)

ELEC PUMP AUTO START - CARGO DOOR OPS (EXT. POWER IN COCKPIT "ON")

A/C ENERGIZED:
When the aircraft is energized (external power ON in the cockpit), the 206PP 28VDC BUS energizes the PWR SPLY 8JJ relay, this relay is closed. In this case the yellow electric control loop is supplied from the 206PP BUS (whatever the position of the MAINT BUS toggle switch on the 5001VE).
When a cargo door operation lever is set to OPEN or CLOSE the Proximity Switch Control Unit (PSCU 5MJ, refer to ATA 52 presentation) energizes the CARGO DOOR RELAY; this relay closes; the HSMU gets a +28 VDC signal through the 8JJ PWR SPLY relay and through the 4JJ P/BSW; by software logic, the HSMU closes the electrical pump control loop; the RCCB 3JJ1 is energized; it closes; the motor of the electric pump is supplied from the 1XP2 bus; the electric pump runs.
The HSMU also illuminates the cyan ON legend on the 6JJ P/BSW.
When the cargo door operation lever is released to the STOP position, the CARGO DOOR RELAY is de-energized by the PSCU; the + 28VDC signal is no longer received by the HSMU but the electric pump control loop is kept closed (so the pump running) for 10 seconds. After this time delay the HSMU opens the control loop. the RCCB 3JJ1 is de-energized, it opens; the pump motor is no longer supplied from the 1XP2; it stops running.
The HSMU also extinguishes the cyan ON legend on the 6JJ P/BSW.

G7508471 - G3NT1T0 - FM29D300000003

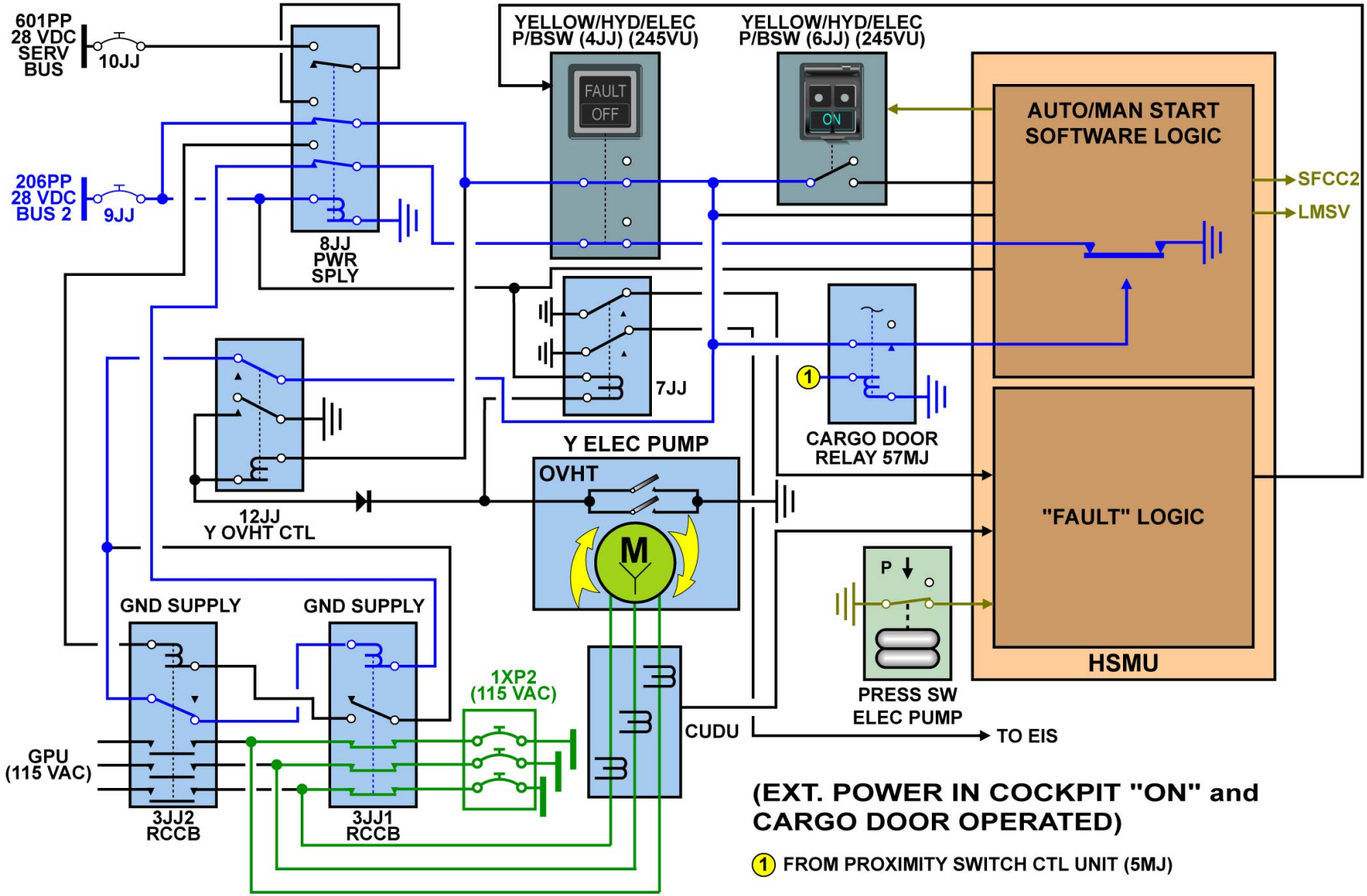

ELEC PUMP AUTO START - CARGO DOOR OPS (EXT. POWER IN COCKPIT "ON")

G7508471 - G3NT1T0 - FM29D300000003

YELLOW HYDRAULIC SYSTEM D/O (3)

CURRENT UNBALANCE DETECTOR UNITS (CUDU)

The CUDUs monitor the supply current of the electric pumps. They detect a current unbalance or the cut-off of one or two phases in the three phases power supply of the electric pumps. They send, to the HSMU, a signal to cut-off the power supply of the contactors related to the electric pumps when they detect an unbalance between the three phases. Switching off the power supply of the current unbalance detector units launches the reset.
A test pushbutton associated to an annunciator light comes on when the test has been done and the CUDU operates properly.

G7508471 - G3NT1T0 - FM29D300000003

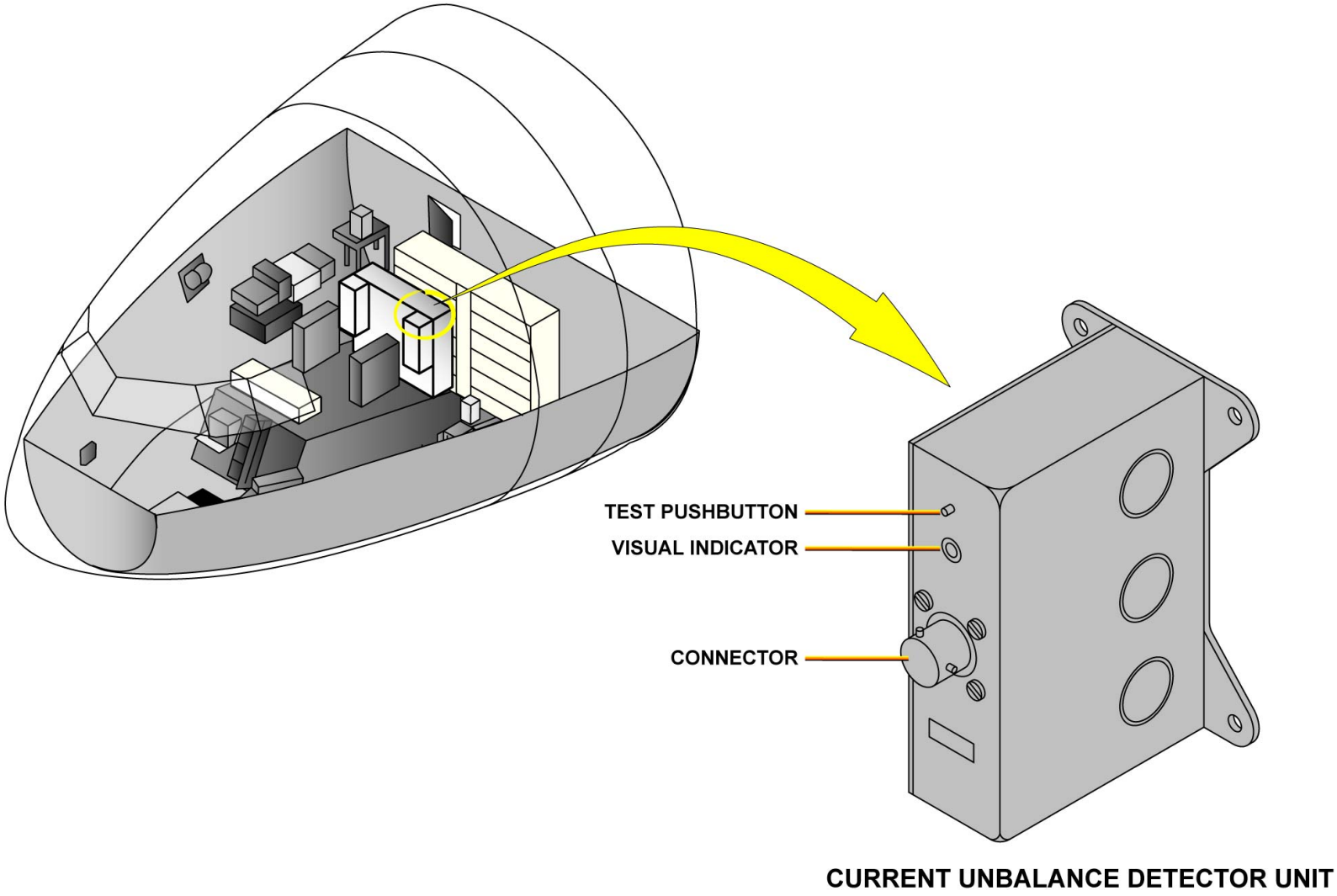

CURRENT UNBALANCE DETECTOR UNITS (CUDU)

G7508471 - G3NT1T0 - FM29D300000003

YELLOW HYDRAULIC SYSTEM D/O (3)

DISTRIBUTION INDICATIONS

The pressure transducer sends an analog signal, which is used to monitor the hydraulic system pressure on the hydraulic ECAM page.
This same signal is also sent to the flight control system in order to give pressure indication. The leak measurement solenoid valve is normally de-energized open. The solenoid valve is energized closed when the Yellow LEAK MEASUREMENT VALVE P/BSW located on the maintenance panel is pressed in. This makes the flight controls hydraulically isolated. The valve closure is inhibited in flight above 100 Kts, using information from Air Data/Inertial Reference Units (ADIRUs) 1 & 3 and Landing Gear Control and Interface Units (LGCIUs).
The pressure switch sends a discrete signal if the pressure is less than 1450 psi. This signal is used for ECAM indication on the hydraulic page and for warning messages. This signal is also used by the flight control system. A second pressure switch is only allocated to give pressure information to the flight control system. The ground service manifold is used during the ground leak test, to selectively let the hydraulic supply to the flight controls when the leak measurement valve is closed.

G7508471 - G3NT1T0 - FM29D300000003

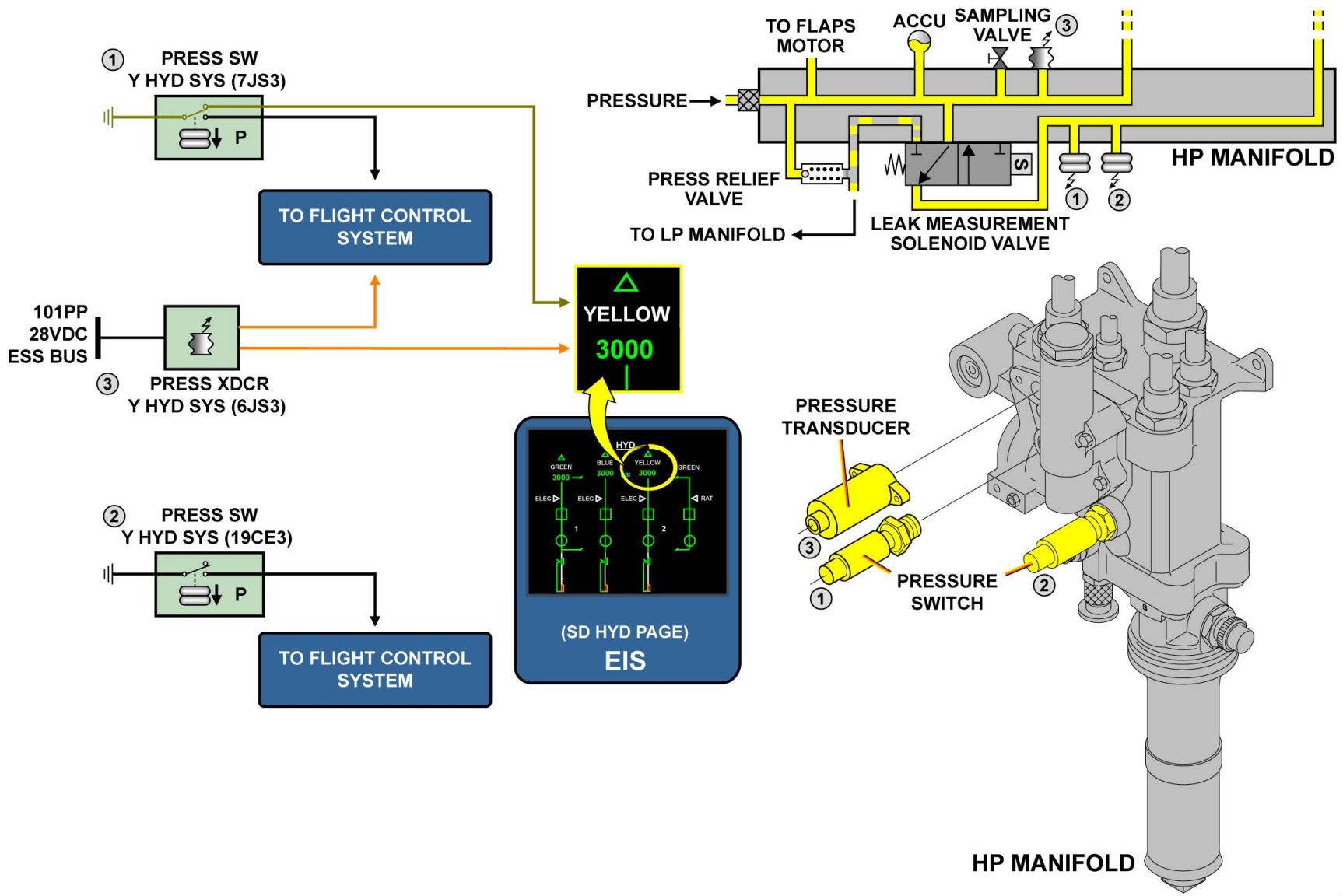

DISTRIBUTION INDICATIONS

G7508471 - G3NT1T0 - FM29D300000003

SEAL DRAIN D/O (3)

GENERAL

In order to have the hydraulic compartment as clean as possible this system collects the hydraulic fluid leakage in transparent tanks. The system is designed so that fluid drains into the recovery tanks under the influence of gravity. If a tank is full, an overflow-pipe drains the excessive fluid into the MLG bay.

SYSTEM DIVISION

The seal drain system drains the leaks of the following equipment into three recovery tanks:
- hydraulic motors of flaps and slats,
- reservoirs,
- emergency electrical generator,
- electrical motor pumps.

Tank 1 in the yellow hydraulic compartment drains:
- the yellow system reservoir via the air-relief valve,
- the blue system reservoir via the air-relief valve,
- the slats Power Control Unit (PCU),
- the yellow electric pump.

Tank 2 in the green hydraulic compartment drains:
- the green system reservoir via the air-relief valve,
- the Constant Speed Motor/Generator (CSM/G),
- the flaps PCU,
- the green electric pump.

Tank 3 in the blue hydraulic compartment drains the blue electric pump.

G7508471 - G3NT1T0 - FM29D4F29AI0103

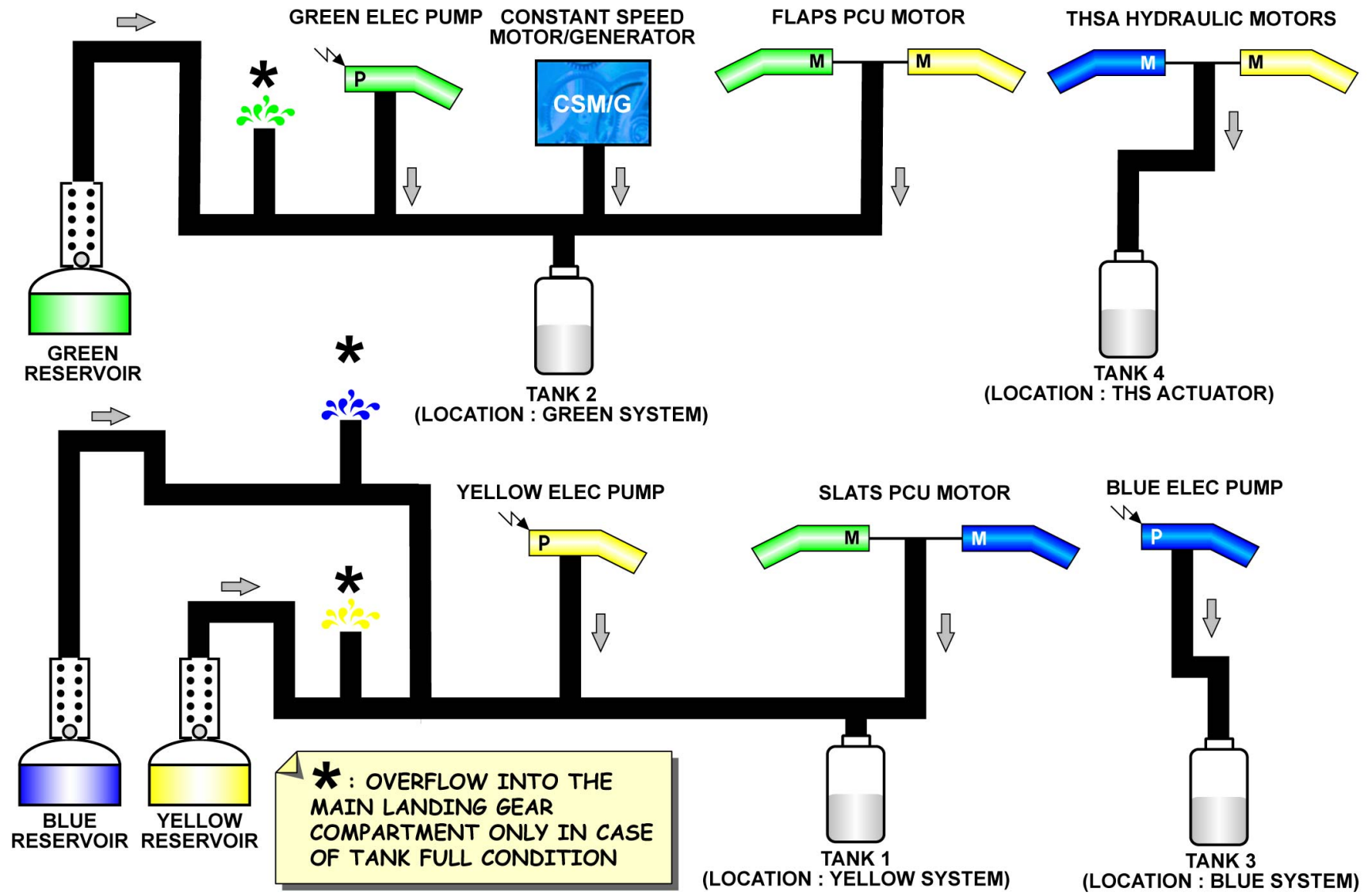

GENERAL & SYSTEM DIVISION

G7508471 - G3NT1T0 - FM29D4F29AI0103

SEAL DRAIN D/O (3)

RECOVERY TANKS

The three recovery tanks are made of plastic. They are attached to the structure with quick-release clamps to make them easier to empty. It is necessary to remove the hydraulic fluid at regular intervals.

G7508471 - G3NT1T0 - FM29D4F29AI0103

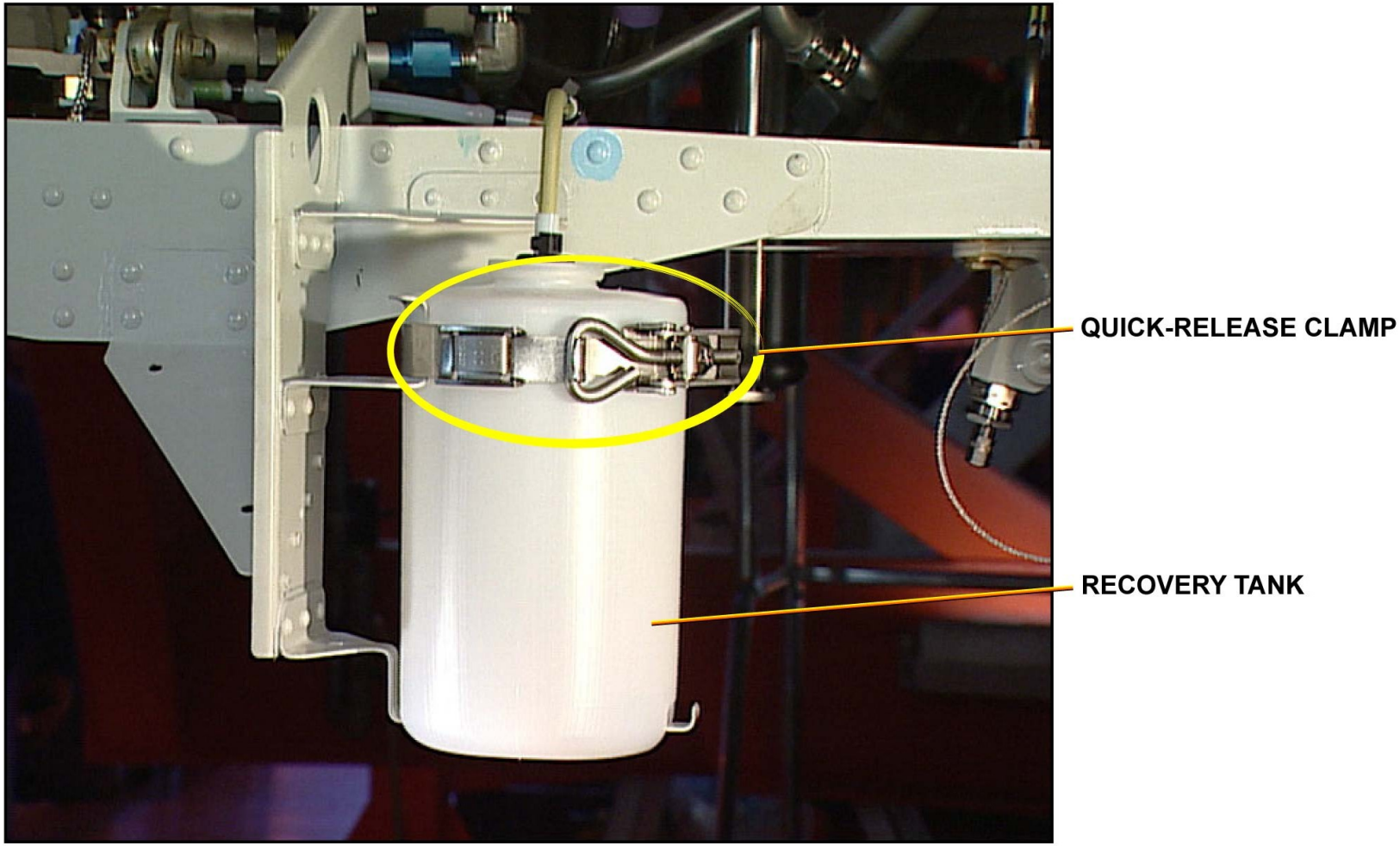

RECOVERY TANKS

G7508471 - G3NT1T0 - FM29D4F29AI0103

LEAK TEST D/O (3)

GENERAL

The purpose of the internal leak test is to make sure that the internal leakage of a system is within certain limits. As the internal leak system is the same for the three hydraulic circuits, and as the three systems have the same internal leak test, this presentation is based on the green system.
On each system, the internal leak test system comprises:
- a ground service manifold,
- a solenoid valve installed on the High Pressure (HP) manifold,
- a hydraulic (HYD)/leak measurement valves P/BSW.

The ground service manifold and the solenoid valve are installed on the HP system. A ground hydraulic supply with a flowmeter has to be used to pressurize the circuit.

SAFETY PRECAUTIONS

Obey these safety precautions:

WARNING: MAKE SURE THAT THE SAFETY DEVICES AND THE WARNING NOTICES ARE IN POSITION BEFORE YOU START A TASK ON OR NEAR:
-THE FLIGHT CONTROLS,
-THE FLIGHT CONTROL SURFACES,
-THE L/G AND THE RELATED DOORS,
-COMPONENTS THAT MOVE.
MOVEMENT OF COMPONENTS CAN KILL OR INJURE PERSONS.
MAKE SURE THAT THE GROUND SAFETY-LOCKS ARE CORRECTLY INSTALLED ON THE L/G. THIS PREVENTS UNWANTED MOVEMENT OF THE L/G.

CAUTION: Do not operate the flaps and slats when one or more leak measurement valve P/BSW is in the released position ("OFF" legend on).
Operation of the flaps and slats in this configuration can cause jamming of the mechanical transmission.

Make sure that the manual selector valves installed on the ground service manifold are in the closed position. Make sure that the primary (PRIM) and secondary (SEC) P/BSW are pushed in (the OFF and FAULT legends are off). Make sure that the flap and slat control lever is in the 0 degree position. Keep all the control surfaces in the 0 degree position during the measurement of the internal leakage. Even if the hydraulic users are at neutral, there is a permanent flow. If this flow is too high, the corresponding system operation will be affected. The internal leakage check has to be done with the hydraulic fluid at its usual operation temperature.

LEAK MEASUREMENT SOLENOID VALVE

The leak measurement solenoid valves are used to isolate the hydraulic supply of the primary flight controls. These valves are only used on ground.
Selecting the leak measurement solenoid valve P/BSW isolates the hydraulic system of the flight controls. The leak measurement solenoid valve control panel is located on the HYD maintenance overhead panel. On ground, the yellow leak measurement valve is automatically closed during cargo doors operation.

GROUND SERVICE MANIFOLD

Each manifold includes:
- three sleeve manual valves operated with a standard tool,
- three check valves of the spring-loaded poppet type.

To test for leaks in the system, we have to open the manual selector valve in order to measure the flow rate for the components in the LH wing, RH

wing or aft fuselage section. A flowmeter can be used for correct flow rate measurement.

FULL SYSTEM CHECK

To make a full system check, it is necessary to pressurize the green system from the ground supply, making sure that the green leak measurement valve P/BSW is pushed in (the "OFF" legend is off).
Monitor the flow shown on the ground hydraulic supply flowmeter and make sure that it is within limits (it must not be greater than 15.5 l.min).
If the internal leakage is too high, do the check of sections of the system to find the cause.

COMPONENTS CHECK

To make a component check, it is necessary to pressurize the green system from the ground supply. To test for leaks, it is necessary to isolate the primary flight controls by releasing the LEAK MEASUREMENT VALVES / G P/BSW.
The PRIM flight controls are now depressurized. Monitor the flow shown on the ground hydraulic supply flowmeter and make sure that it is within limits: it must not be greater than 5 l.min.
The ground service manifold is equipped with valves that are manually operated with a standard tool. Each valve permits the LH wing, the RH wing and the aft fuselage to be independently pressurized. For example, to test for leaks in the LH wing you need to turn the LH wing manual selector valve to the open position.
Now, monitor the flow shown on the ground hydraulic supply flowmeter and make sure that it is within limits: it must not be greater than 8 l.min.
After this, close the manual valve, and look for defective components.
If the internal leak rate is too high, you must find the defective component.
The same operation must be done on the RH wing and aft fuselage section.
Then, the check is completed.

G7508471 - G3NT1T0 - FM29D500000002

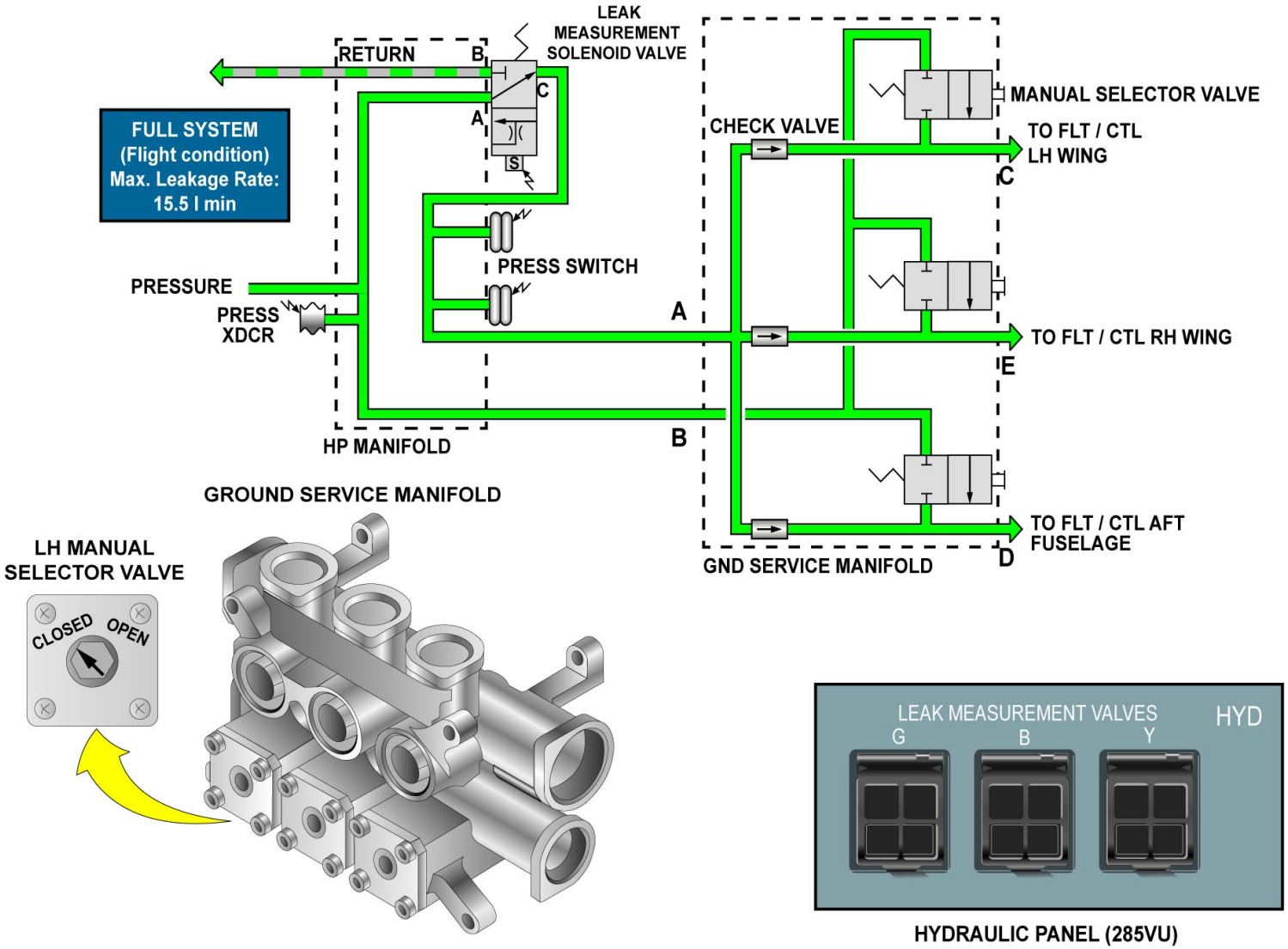

GENERAL ... COMPONENTS CHECK

G7508471 - G3NT1T0 - FM29D500000002

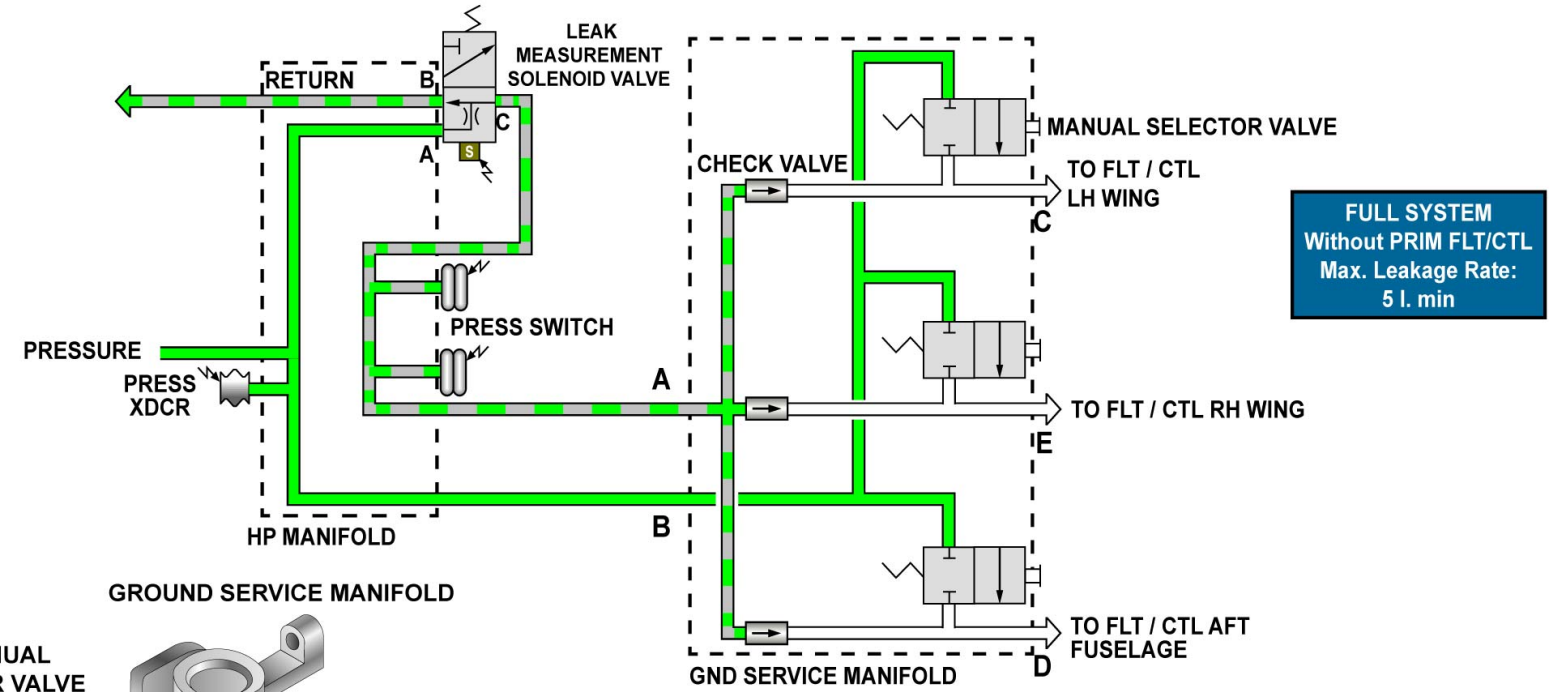

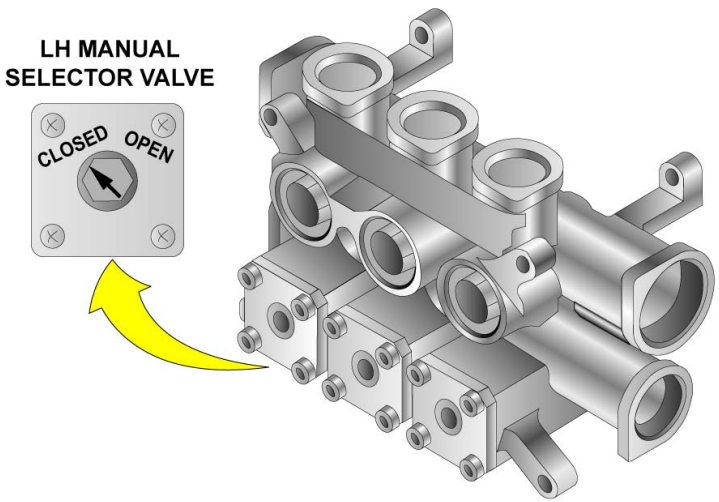

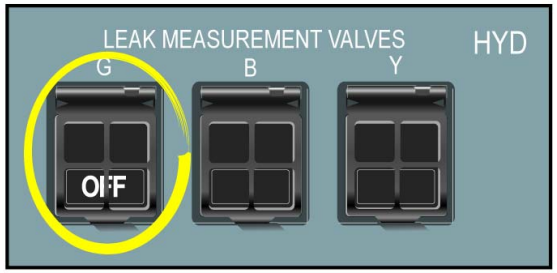

HYDRAULIC PANEL (285VU)

GENERAL ... COMPONENTS CHECK

G7508471 - G3NT1T0 - FM29D500000002

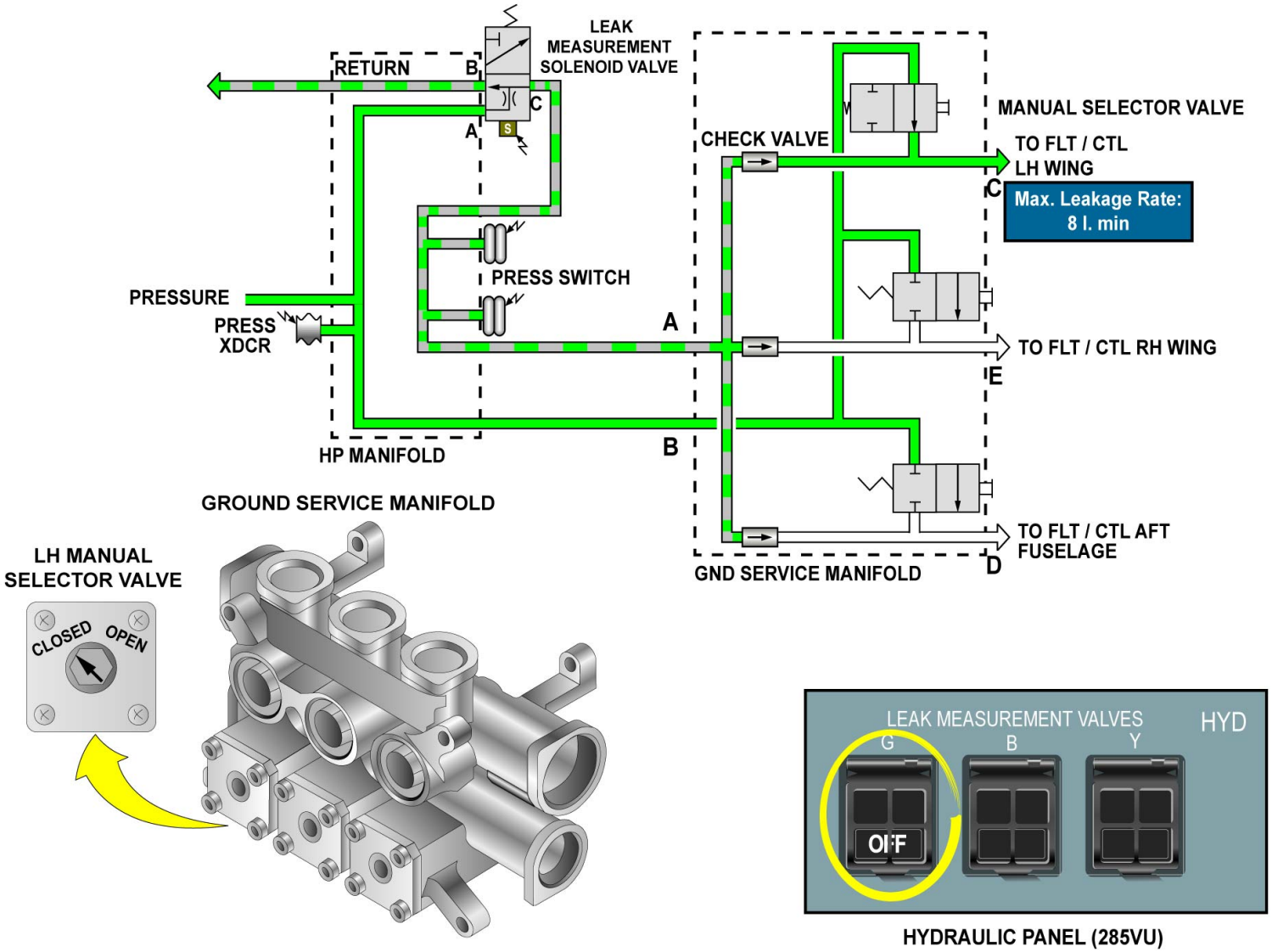

GENERAL ... COMPONENTS CHECK

This Page Intentionally Left Blank

G7508471 - G3NT1T0 - FM29D500000002

RAM AIR TURBINE MAN DEPLOYMENT SYS LINE MAINT (2)

INTRODUCTION

Servicing and checking the condition of the Ram Air Turbine (RAT) manual deployment system is done in three stages. These are:
- operational test of the RAT manual extension/retraction,
- operational test of the RAT manual deployment: inspection and test with Aircraft Condition Monitoring System (ACMS),
- oil replenishment of the RAT.

WARNING: WHEN WORKING WITH HYDRAULIC COMPONENTS AND/OR FLUIDS, IT IS IMPORTANT TO FOLLOW THE PROPER SAFETY PRACTICES, ESPECIALLY BY PREVENTING CONTACT WITH SKIN OR EYES, AND ALSO AVOIDING SYSTEMS CONTAMINATION. WHEN PREPARING OPERATION AND TEST ON HYDRAULIC SYSTEMS, IT IS IMPORTANT TO MAKE SURE THE FLIGHT CONTROLS AND L/G AREAS ARE CLEAR, WITH SUITABLE SAFETY BARRIERS AND NOTICES IN PLACE.

When working near the location of the RAT, it is necessary to prevent inadvertent extension by installing the RAT safety pin. It must be removed before aircraft dispatch.

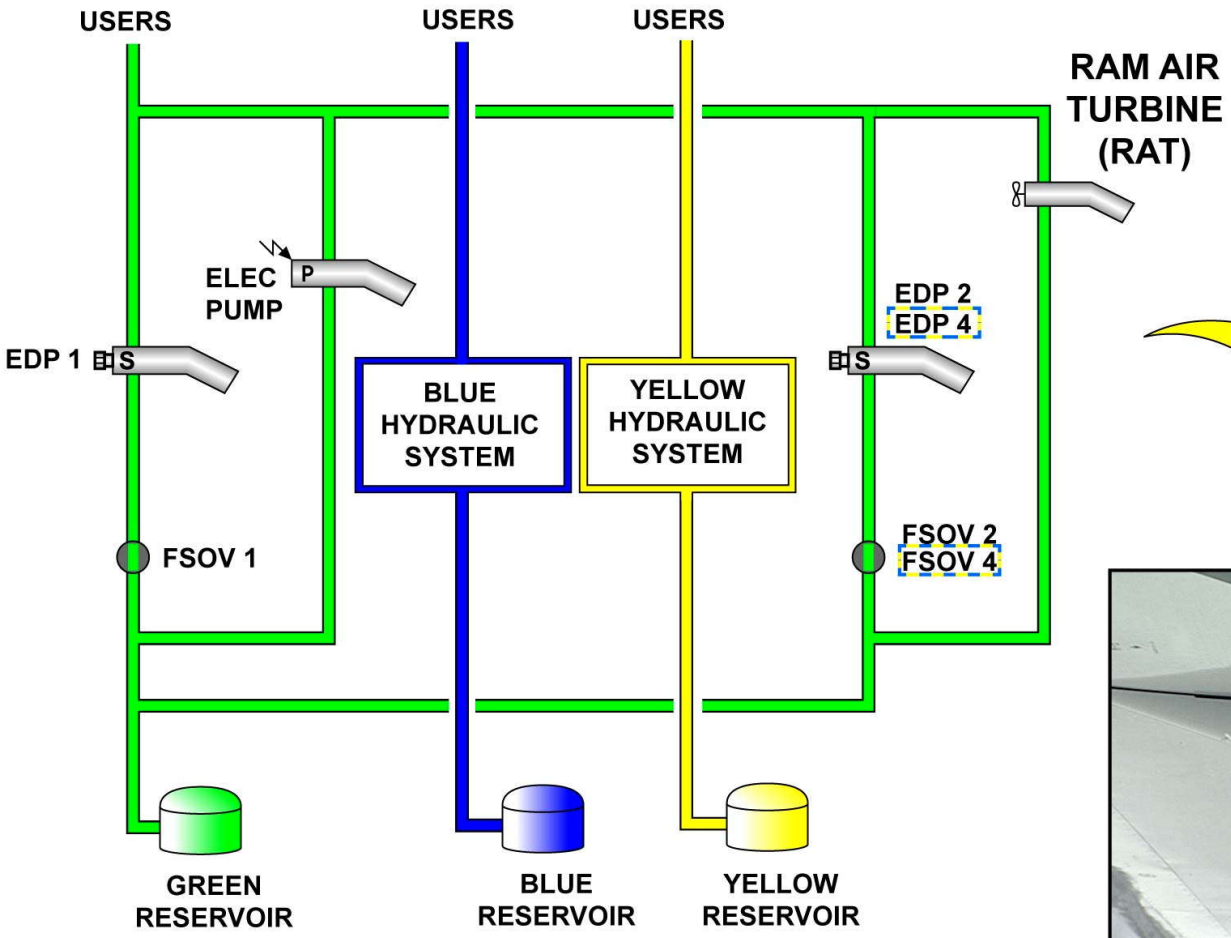

FOR A340-300

EDP : ENGINE DRIVEN PUMP
FSOV : FIRE SHUT OFF VALVE

INTRODUCTION

RAM AIR TURBINE MAN DEPLOYMENT SYS LINE MAINT (2)

OPERATIONAL TEST OF THE RAT MANUAL EXTENSION/RETRACTION

The following tests check the condition of the RAT manual actuation system and of the RAT itself.

G7508471 - G3NT1T0 - FM29Y2LINEMCE03

Operational Test of the RAT Manual Extension/Retraction

...
Job set-up
...

- **Make sure that the Green hydraulic system is depressurized.**

...
Procedure
...

- **RAT extension**
- **RAT inspection**
- **RAT retraction**
- **Stowed RAT inspection**

...
Close-up
...

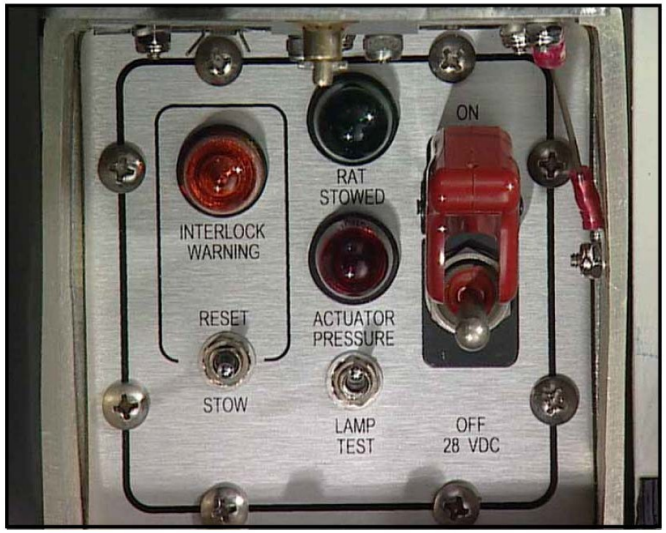

RAT STOW PANEL

RAT EXTENDED

A330 HYDRAULIC PAGE (245VU)

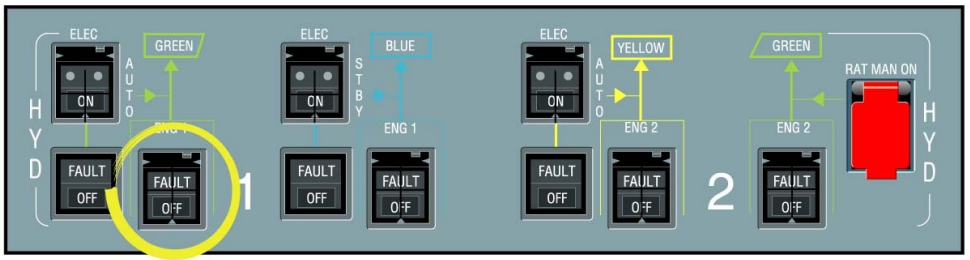

OPERATIONAL TEST OF THE RAT MANUAL EXTENSION/RETRACTION

RAM AIR TURBINE MAN DEPLOYMENT SYS LINE MAINT (2)

OPERATIONAL TEST OF THE RAT MANUAL EXTENSION/RETRACTION (continued)

RAT EXTENSION

Install the safety pin and make sure that the green hydraulic system is depressurized. Push the RAT warming flow indicator from "out" to "in" position and remove the safety pin.
At the HYD panel, push the RAT MAN ON pushbutton, but not longer than 1 minute.
Check on the ECAM that the RAT triangle indication changes from white to amber and that the EWD RAT FAULT warning comes on.
The actual RAT extension must be observed.
On the RAT stow panel, switch the power ON and do the lamp test.

G7508471 - G3NT1T0 - FM29Y2LINEMCE03

Operational Test of the RAT Manual Extension/Retraction

...
Job set-up
...

Make sure that the Green hydraulic system is depressurized.

...
Procedure
...

RAT extension

...
On the HYD panel 245VU: open the guard and push the RAT MAN ON pushbutton switch to ON.
...
On the RAT stow panel:
...

RAT inspection

RAT retraction

Stowed RAT inspection

...
Close-up
...

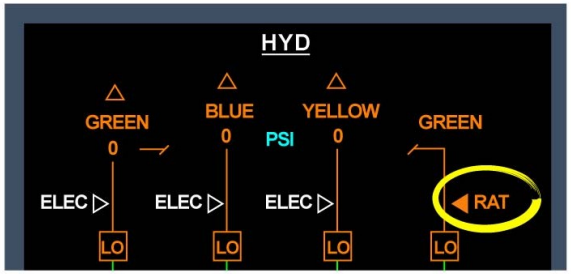

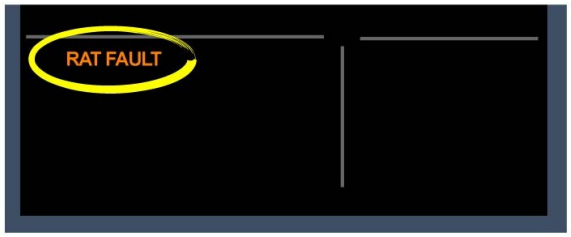

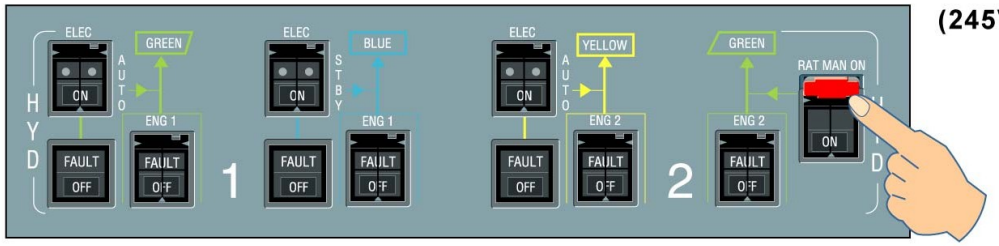

(245VU)

OPERATIONAL TEST OF THE RAT MANUAL EXTENSION/RETRACTION - RAT EXTENSION

Operational Test of the RAT Manual Extension/Retraction

...
✓ **Job set-up**
...
✓ **Make sure that the Green hydraulic system is depressurized.**
...
Procedure
...
RAT extension
...
On the HYD panel 245VU: open the guard and push the RAT MAN ON pushbutton switch to ON.
...
On the RAT stow panel:
...
RAT inspection
RAT retraction
Stowed RAT inspection
...
Close-up
...

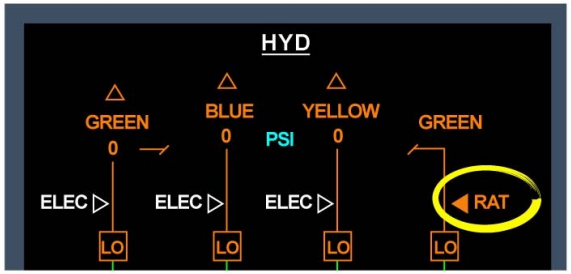

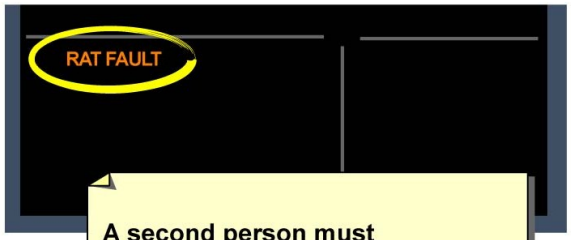

A second person must examine the extension of the RAT

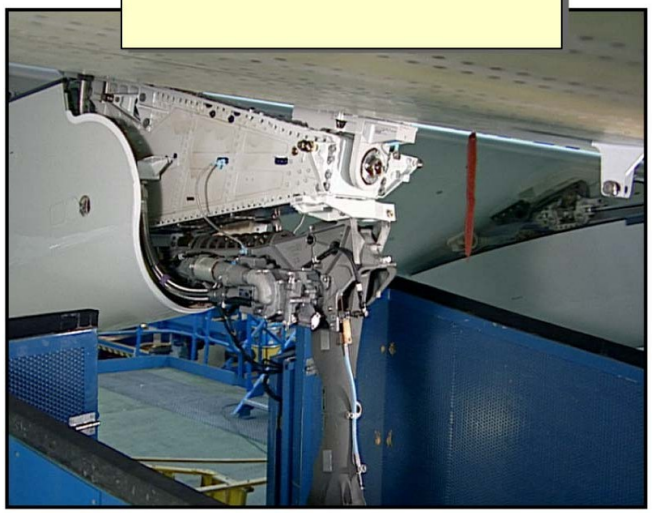

OPERATIONAL TEST OF THE RAT MANUAL EXTENSION/RETRACTION - RAT EXTENSION

Operational Test of the RAT Manual Extension/Retraction

...
Job set-up
...

Make sure that the Green hydraulic system is depressurized.

...
Procedure
...

RAT extension

...
On the HYD panel 245VU: open the guard and push the RAT MAN ON pushbutton switch to ON.
...

On the RAT stow panel:
-put the ON/OFF switch to ON.
-put and hold the LAMP TEST toggle switch to ON.
-release the LAMP TEST toggle switch to OFF.

RAT inspection

RAT retraction

Stowed RAT inspection

...
Close-up
...

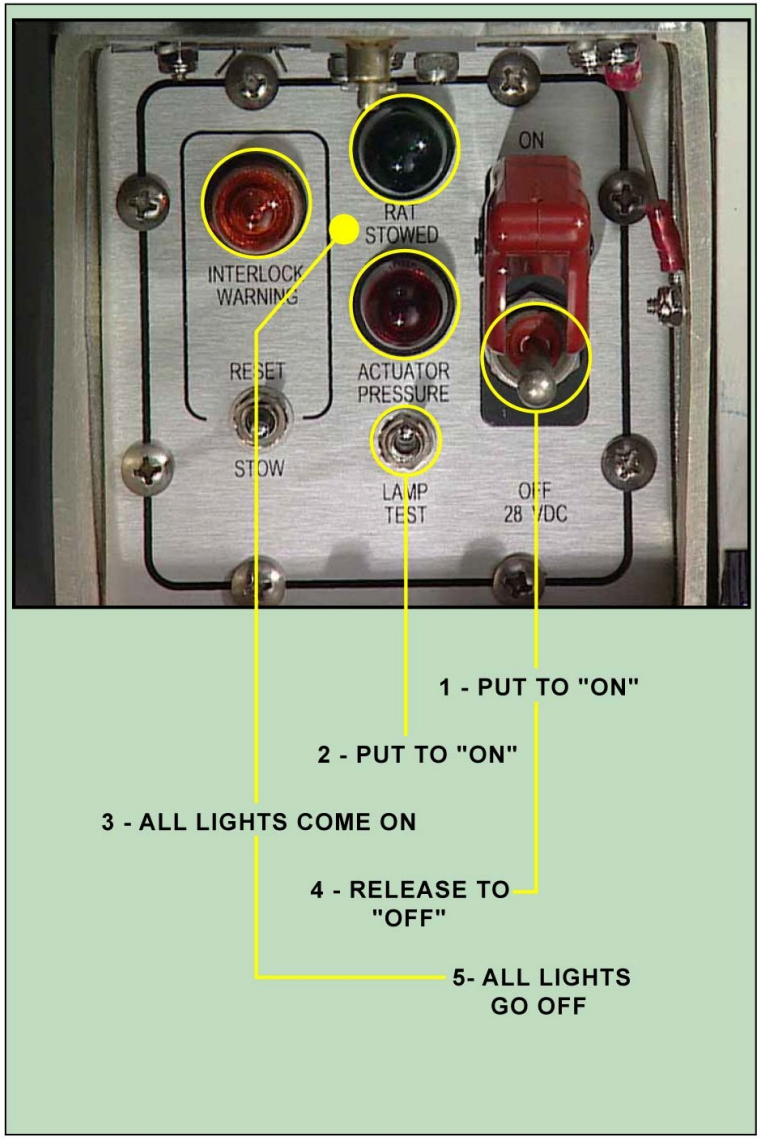

OPERATIONAL TEST OF THE RAT MANUAL EXTENSION/RETRACTION - RAT EXTENSION

RAM AIR TURBINE MAN DEPLOYMENT SYS LINE MAINT (2)

OPERATIONAL TEST OF THE RAT MANUAL EXTENSION/RETRACTION (continued)

RAT INSPECTION

Inspect the turbine blades for damage. Pressurize the green hydraulic system with the electric pump.
Check that the RAT pump warming flow indicator is in "OUT" position.
Check the retraction interlock by turning the blades away from the index position. Select STOW on the RAT stow panel, then check the red RAT ACTUATOR PRESSURE light comes on. The RAT retraction stops at 10 degrees. Then the RAT goes back to the extended position and the amber INTERLOCK light comes on.

NOTE: If the RAT exceeds 15 degrees, release the STOW switch immediately to prevent damage.

Select RESET at the stow panel and check the interlock light goes off.

G7508471 - G3NT1T0 - FM29Y2LINEMCE03

Operational Test of the RAT Manual Extension/Retraction

...
Job set-up
...

Make sure that the Green hydraulic system is depressurized.

...
Procedure
...

RAT extension

RAT inspection

At the RAT:
- inspect the turbine blades for damage.

Pressurize the Green hydraulic system with the electric pump.
At the RAT:
- check the RAT warming-flow indicator.
At the RAT:
- move the turbine blades away from the index position.
On the RAT stow panel:
- put and hold the STOW/RESET switch to STOW.
On the RAT stow panel:
- put the STOW/RESET switch to RESET and then release the switch to neutral.

RAT retraction

Stowed RAT inspection

...
Close-up
...

OPERATIONAL TEST OF THE RAT MANUAL EXTENSION/RETRACTION - RAT INSPECTION

Operational Test of the RAT Manual Extension/Retraction

...
Job set-up
...

Make sure that the Green hydraulic system is depressurized.

...
Procedure
...

RAT extension

RAT inspection
At the RAT:
- inspect the turbine blades for damage.
Pressurize the Green hydraulic system with the electric pump.
At the RAT:
- check the RAT warming-flow indicator.
At the RAT:
- move the turbine blades away from the index position.
On the RAT stow panel:
- put and hold the STOW/RESET switch to STOW.
On the RAT stow panel:
- put the STOW/RESET switch to RESET and then release the switch to neutral.

RAT retraction

Stowed RAT inspection

...
Close-up
...

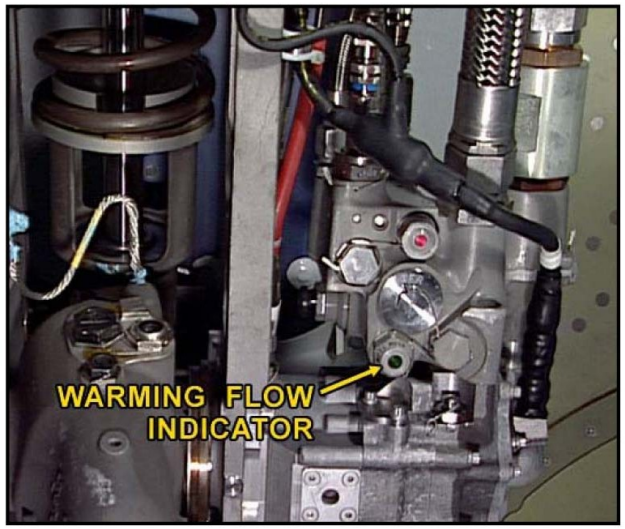

(245VU)

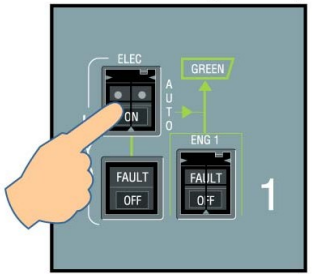

OPERATIONAL TEST OF THE RAT MANUAL EXTENSION/RETRACTION - RAT INSPECTION

Operational Test of the RAT Manual Extension/Retraction

...
Job set-up
...

Make sure that the Green hydraulic system is depressurized.

...
Procedure
...

RAT extension

RAT inspection
At the RAT:
- inspect the turbine blades for damage.
Pressurize the Green hydraulic system with the electric pump.
At the RAT:
- check the RAT warming-flow indicator.
At the RAT:
- move the turbine blades away from the index position.
On the RAT stow panel:
- put and hold the STOW/RESET switch to STOW.
On the RAT stow panel:
- put the STOW/RESET switch to RESET and then release the switch to neutral.

RAT retraction

Stowed RAT inspection

...
Close-up
...

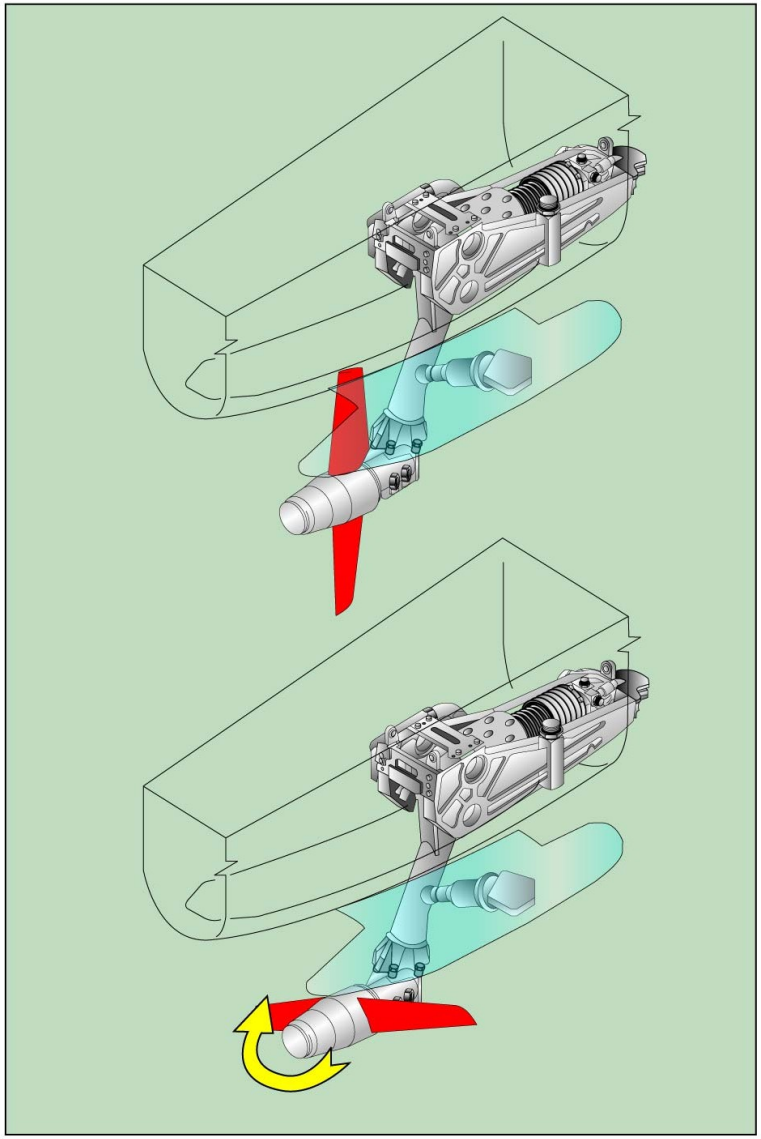

OPERATIONAL TEST OF THE RAT MANUAL EXTENSION/RETRACTION - RAT INSPECTION

Operational Test of the RAT Manual Extension/Retraction

...
Job set-up
...

Make sure that the Green hydraulic system is depressurized.

...
Procedure
...

RAT extension

RAT inspection

At the RAT:
- inspect the turbine blades for damage.

Pressurize the Green hydraulic system with the electric pump.

At the RAT:
- check the RAT warming-flow indicator.

At the RAT:
- move the turbine blades away from the index position.

On the RAT stow panel:
- put and hold the STOW/RESET switch to STOW.

On the RAT stow panel:
- put the STOW/RESET switch to RESET and then release the switch to neutral.

RAT retraction

Stowed RAT inspection

...
Close-up
...

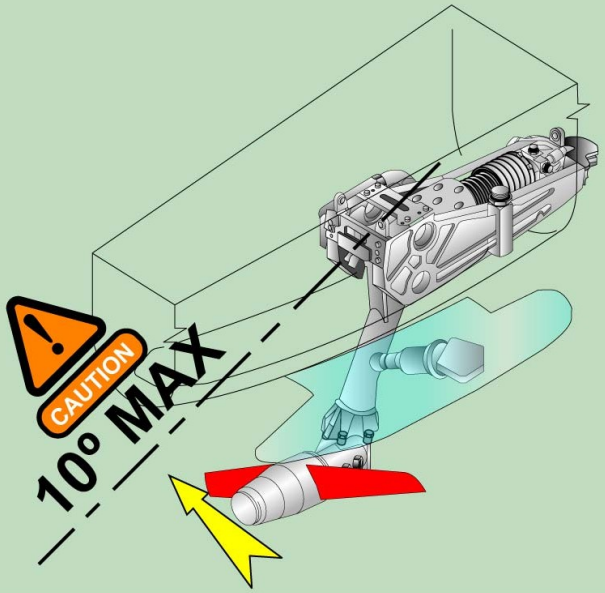

OPERATIONAL TEST OF THE RAT MANUAL EXTENSION/RETRACTION - RAT INSPECTION

Operational Test of the RAT Manual Extension/Retraction

...
Job set-up
...

Make sure that the Green hydraulic system is depressurized.

...
Procedure
...

RAT extension

RAT inspection

At the RAT:
- inspect the turbine blades for damage.

Pressurize the Green hydraulic system with the electric pump.

At the RAT:
- check the RAT warming-flow indicator.

At the RAT:
- move the turbine blades away from the index position.

On the RAT stow panel:
- put and hold the STOW/RESET switch to STOW.

On the RAT stow panel:
- put the STOW/RESET switch to RESET and then release the switch to neutral.

RAT retraction

Stowed RAT inspection

...
Close-up
...

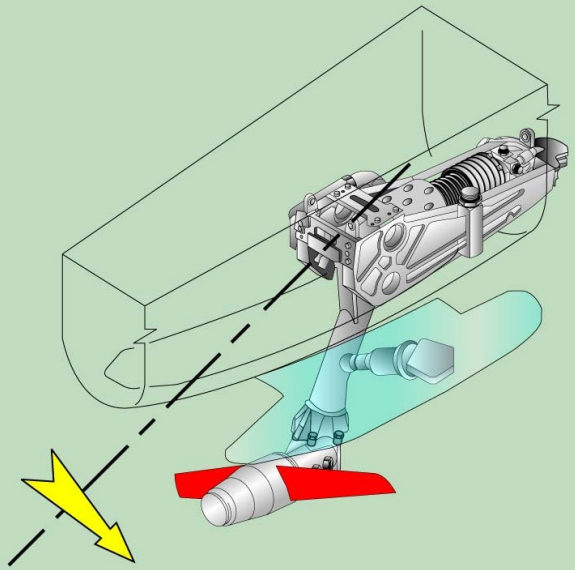

OPERATIONAL TEST OF THE RAT MANUAL EXTENSION/RETRACTION - RAT INSPECTION

RAM AIR TURBINE MAN DEPLOYMENT SYS LINE MAINT (2)

OPERATIONAL TEST OF THE RAT MANUAL EXTENSION/RETRACTION (continued)

RAT RETRACTION

Align the turbine blades in the index position.
Select and hold STOW.
Confirm that the red ACTUATOR PRESSURE comes on. The RAT retracts in less than 30 seconds, then the green RAT STOWED light comes on as soon as the RAT reaches the fully stowed position. Also check on the ECAM that the RAT triangle indication changes from amber to white and the RAT fault message goes off.
Release the STOW switch and confirm the red ACTUATOR PRESSURE light cancels.
Set the ON/OFF switch to OFF, reset the guard and close the access panel.

G7508471 - G3NT1T0 - FM29Y2LINEMCE03

Operational Test of the RAT Manual Extension/Retraction

...
Job set-up
...

Make sure that the Green hydraulic system is depressurized.

...
Procedure
...

RAT extension

RAT inspection

RAT retraction

At the RAT:
-align the turbine blades in the index position.
On the RAT stow panel:
-put and hold the STOW/RESET switch to STOW.
On the RAT stow panel:
-release the STOW/RESET switch to neutral.
...
On the RAT stow panel, put the ON/OFF switch to OFF and the RAT STOWED light goes off.
...
Close the RAT stow-panel access door.

Stowed RAT inspection

...
Close-up
...

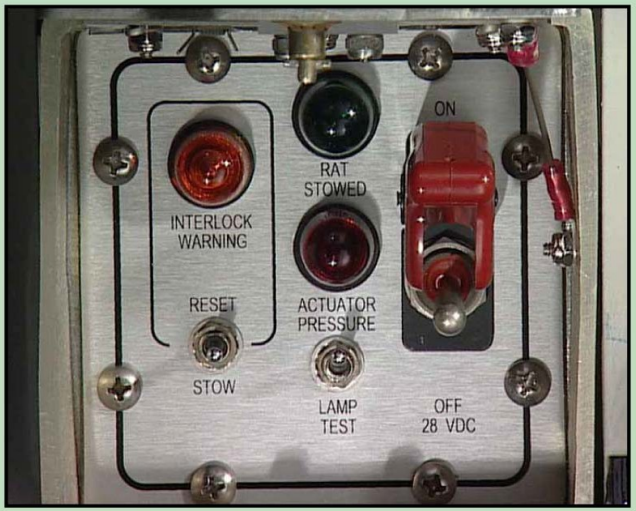

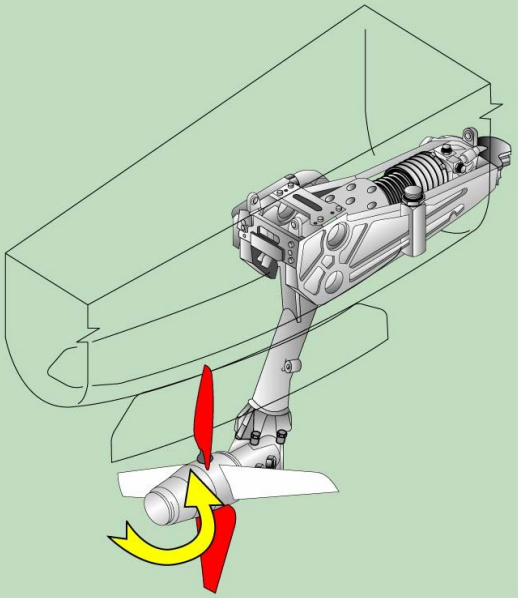

OPERATIONAL TEST OF THE RAT MANUAL EXTENSION/RETRACTION - RAT RETRACTION

Operational Test of the RAT Manual Extension/Retraction

...
Job set-up
...

Make sure that the Green hydraulic system is depressurized.

...
Procedure
...

RAT extension

RAT inspection

RAT retraction

At the RAT:
-align the turbine blades in the index position.
On the RAT stow panel:
-put and hold the STOW/RESET switch to STOW.
On the RAT stow panel:
-release the STOW/RESET switch to neutral.
...
On the RAT stow panel, put the ON/OFF switch to OFF and the RAT STOWED light goes off.
...
Close the RAT stow-panel access door.

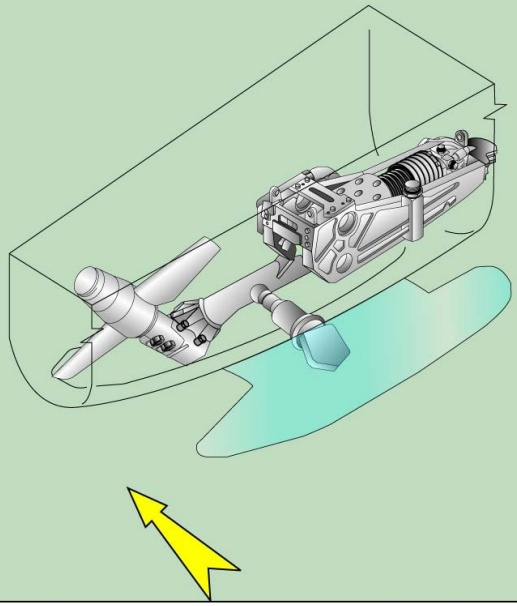

OPERATIONAL TEST OF THE RAT MANUAL EXTENSION/RETRACTION - RAT RETRACTION

Operational Test of the RAT Manual Extension/Retraction

...
Job set-up
...

Make sure that the Green hydraulic system is depressurized.

...
Procedure
...

RAT extension

RAT inspection

RAT retraction

At the RAT:
-align the turbine blades in the index position.
On the RAT stow panel:
-put and hold the STOW/RESET switch to STOW.
On the RAT stow panel:
-release the STOW/RESET switch to neutral.
...
On the RAT stow panel, put the ON/OFF switch to OFF and the RAT STOWED light goes off.
...
Close the RAT stow-panel access door.

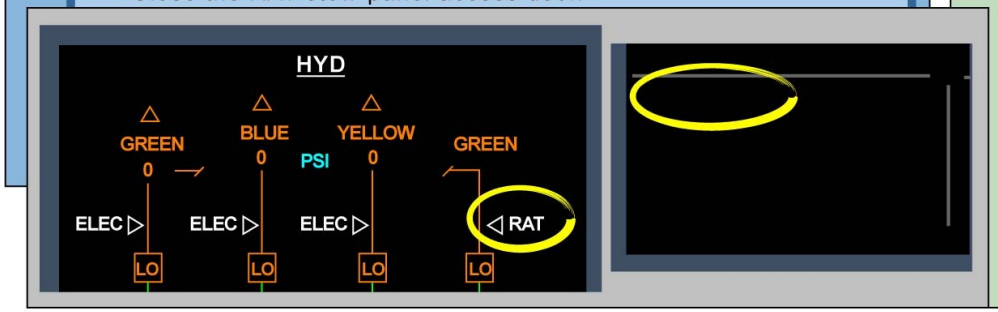

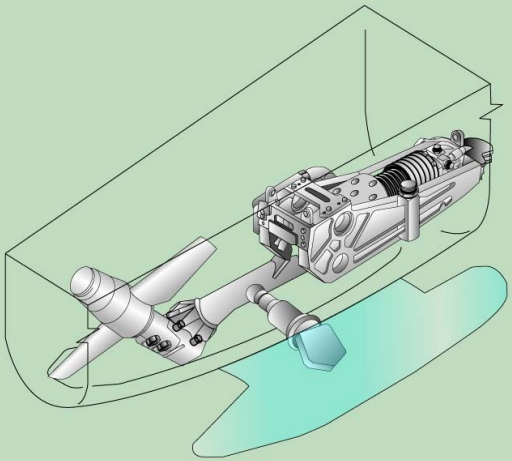

OPERATIONAL TEST OF THE RAT MANUAL EXTENSION/RETRACTION - RAT RETRACTION

Operational Test of the RAT Manual Extension/Retraction

...
Job set-up
...

Make sure that the Green hydraulic system is depressurized.

...
Procedure
...

RAT extension

RAT inspection

RAT retraction

At the RAT:
-align the turbine blades in the index position.

On the RAT stow panel:
-put and hold the STOW/RESET switch to STOW.

On the RAT stow panel:
-release the STOW/RESET switch to neutral.

...
On the RAT stow panel, put the ON/OFF switch to OFF and the RAT STOWED light goes off.
...
Close the RAT stow-panel access door.

Stowed RAT inspection

...
Close-up
...

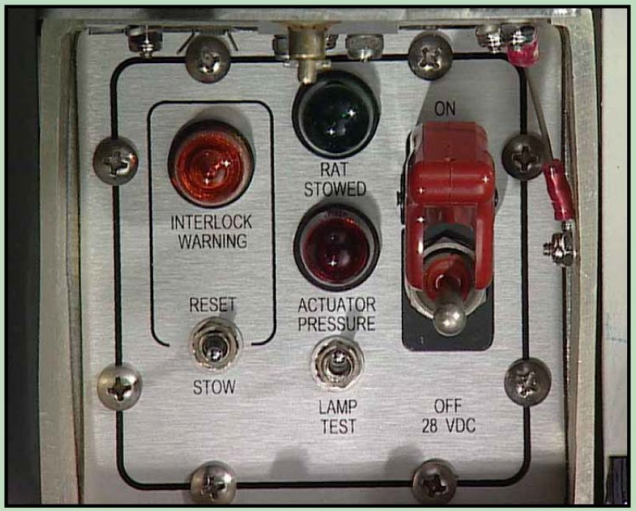

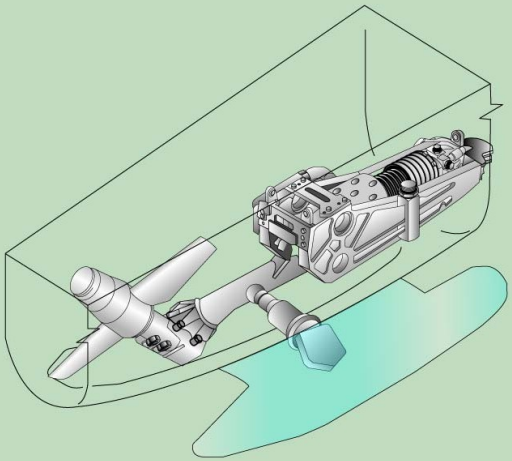

OPERATIONAL TEST OF THE RAT MANUAL EXTENSION/RETRACTION - RAT RETRACTION

Operational Test of the RAT Manual Extension/Retraction

...
Job set-up
...

- ✓ **Make sure that the Green hydraulic system is depressurized.**

...
Procedure
...

- ✓ **RAT extension**
- ✓ **RAT inspection**

RAT retraction

- ✓ At the RAT:
  -align the turbine blades in the index position.
- ✓ On the RAT stow panel:
  -put and hold the STOW/RESET switch to STOW.
- ✓ On the RAT stow panel:
  -release the STOW/RESET switch to neutral.

...

⇨ On the RAT stow panel, put the ON/OFF switch to OFF and the RAT STOWED light goes off.
...
Close the RAT stow-panel access door.

Stowed RAT inspection

...
Close-up
...

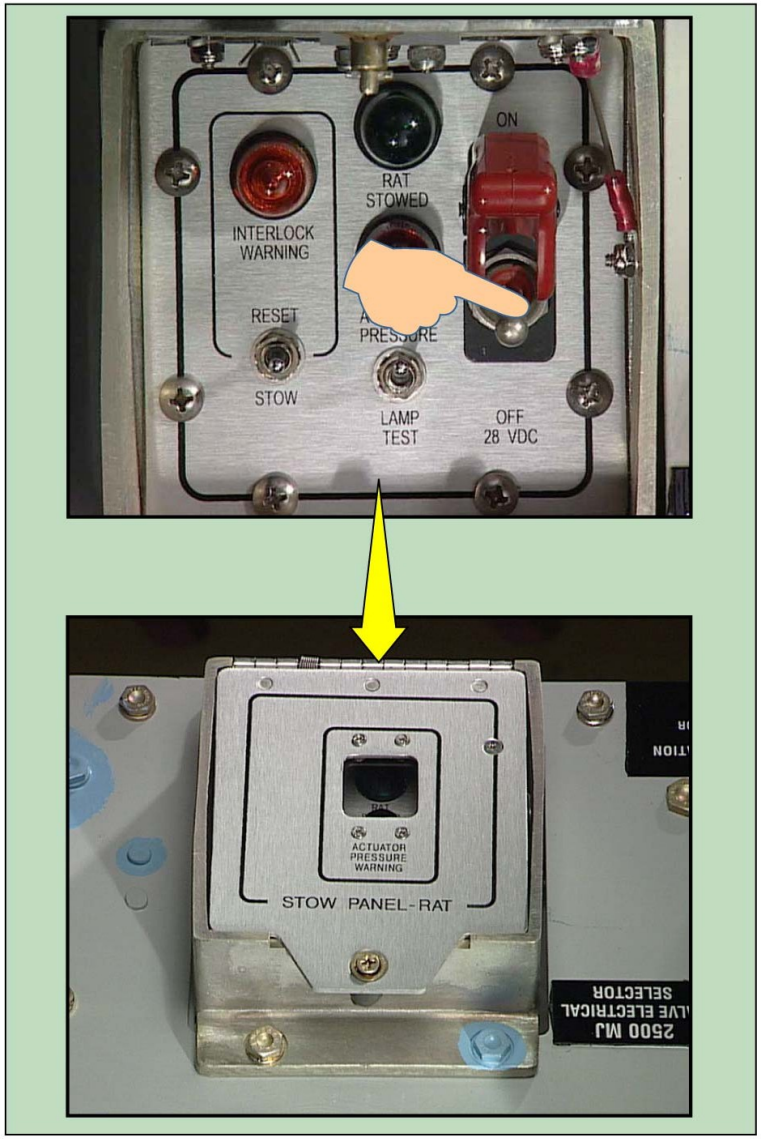

OPERATIONAL TEST OF THE RAT MANUAL EXTENSION/RETRACTION - RAT RETRACTION

RAM AIR TURBINE MAN DEPLOYMENT SYS LINE MAINT (2)

OPERATIONAL TEST OF THE RAT MANUAL EXTENSION/RETRACTION (continued)

STOWED RAT INSPECTION

Install the RAT safety pin in the RAT.
Check the RAT Differential pressure indicator (Dpi) is in the "in" position, the RAT warming flow and the volumetric fuse are in the "out" position. Push the RAT volumetric fuse "in" and pull out again, check if it moves easily "in" and "out".
On the RAT PNL put to "off" and RAT STOWED light goes of.
Remove the safety pin before dispatch.
Clear the work area.

G7508471 - G3NT1T0 - FM29Y2LINEMCE03

Operational Test of the RAT Manual Extension/Retraction

...
Job set-up
...

- **Make sure that the Green hydraulic system is depressurized.**

...
Procedure
...

- **RAT extension**
- **RAT inspection**
- **RAT retraction**

Stowed RAT inspection
...
Install the RAT SAFETY PIN in the RAT.
Inspect the RAT and make sure that the RAT differential pressure indicator is in the "in" position.
Volumetric fuse OUT.
Warming flow OUT.
Push RAT volumetric "IN" and pull out again.
...

...
Close-up
...

...
Close-up
...

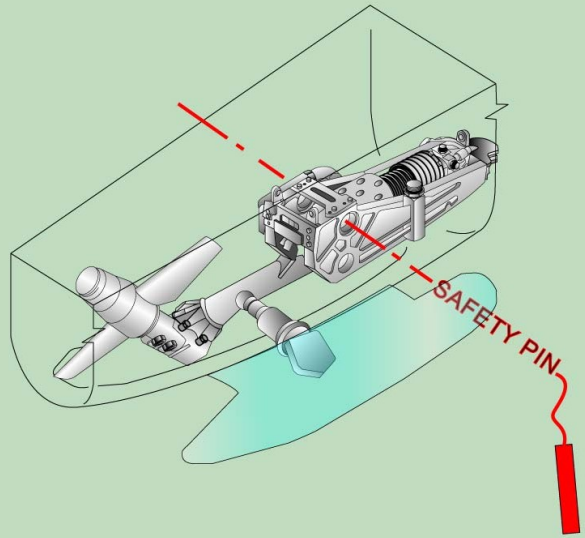

RAT MANIFOLD

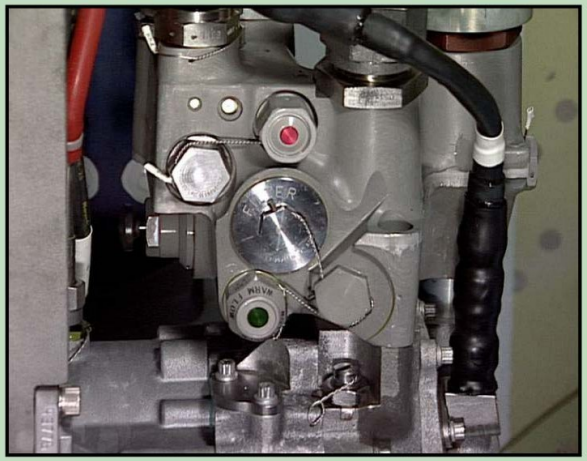

OPERATIONAL TEST OF THE RAT MANUAL EXTENSION/RETRACTION - STOWED RAT INSPECTION

Operational Test of the RAT Manual Extension/Retraction

...
✓ **Job set-up**
...
✓ **Make sure that the Green hydraulic system is depressurized.**
...
Procedure
...
✓ **RAT extension**

✓ **RAT inspection**

✓ **RAT retraction**

✓ **Stowed RAT inspection**
...
⇨ Put to "OFF" on the RAT PNL and RAT STOWED light goes off
...
Remove the SAFETY PIN from the RAT
...
Close-up

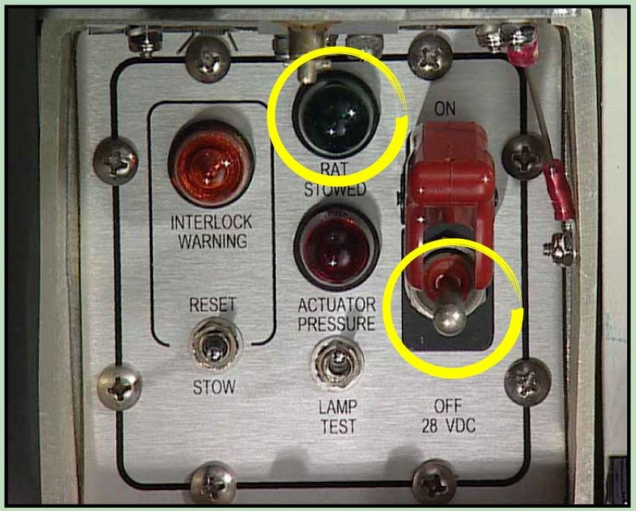

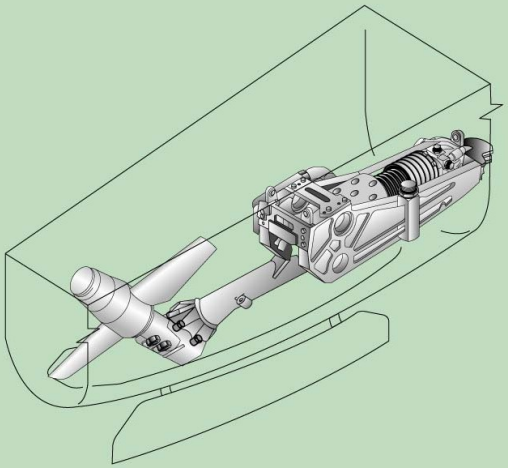

OPERATIONAL TEST OF THE RAT MANUAL EXTENSION/RETRACTION - STOWED RAT INSPECTION

Operational Test of the RAT Manual Extension/Retraction

...
Job set-up
...
Make sure that the Green hydraulic system is depressurized.
...
Procedure
...
RAT extension

RAT inspection

RAT retraction

Stowed RAT inspection
...
Put to "OFF" on the RAT PNL and RAT STOWED light goes off
...
Remove the SAFETY PIN from the RAT
...
Close-up

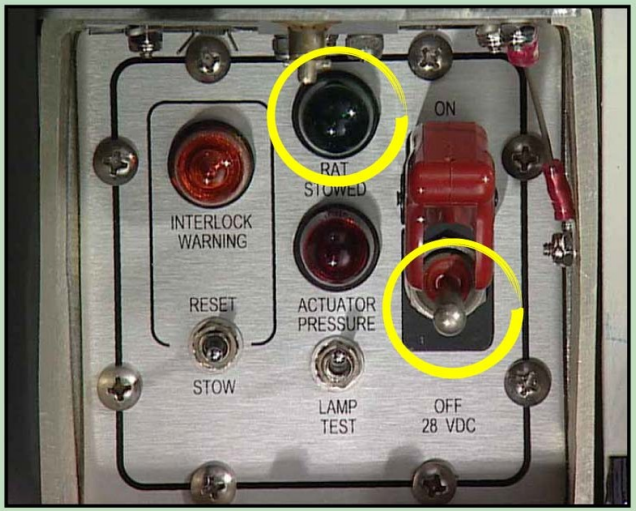

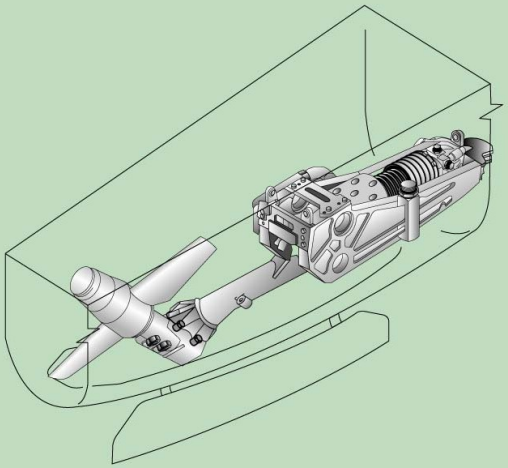

OPERATIONAL TEST OF THE RAT MANUAL EXTENSION/RETRACTION - STOWED RAT INSPECTION

Operational Test of the RAT Manual Extension/Retraction

...
✓ Job set-up
...
✓ Make sure that the Green hydraulic system is depressurized.
...
Procedure
...
✓ RAT extension
✓ RAT inspection
✓ RAT retraction
✓ Stowed RAT inspection
...
✓ Close-up
...

TASK COMPLETED

OPERATIONAL TEST OF THE RAT MANUAL EXTENSION/RETRACTION - STOWED RAT INSPECTION

This Page Intentionally Left Blank

G7508471 - G3NT1T0 - FM29Y2LINEMCE03

RAM AIR TURBINE MAN DEPLOYMENT SYS LINE MAINT (2)

OPERATIONAL TEST OF THE RAT MANUAL DEPLOYMENT / INSPECTION / TEST WITH ACMS

NOTE: This procedure can also be done without ACMS.
The following tests check the condition of the RAT manual actuation system and of the RAT itself.

G7508471 - G3NT1T0 - FM29Y2LINEMCE03

Operational Test of the RAT Manual Deployment / Inspection / Test with ACMS

Job set-up
...

- Make sure that the Green hydraulic system is depressurized.
- Set the leak measurement valves to OFF.

...
Procedure

- Operational Test of the Manual RAT Deployment

...

- Aircraft Maintenance Configuration
- Installation of the Ground Support Equipment
- Put the ACMS system in the operational condition
- Spin-Up and Governing Test with the ACMS
- Pump Test with the ACMS
- Anti-Stall Device Test with the ACMS
- Inspection

...
Close-up
...

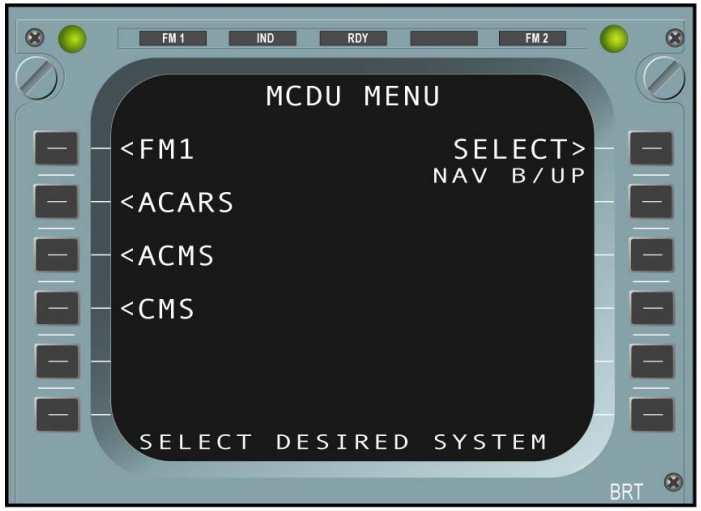

OPERATIONAL TEST OF THE RAT MANUAL DEPLOYMENT / INSPECTION / TEST WITH ACMS

RAM AIR TURBINE MAN DEPLOYMENT SYS LINE MAINT (2)

OPERATIONAL TEST OF THE RAT MANUAL DEPLOYMENT / INSPECTION / TEST WITH ACMS (continued)

PRE-TEST SET-UP

Make sure the green hydraulic system is depressurized.
Prevent inadvertent operation of the flight controls by setting the LEAK MEASUREMENT VALVES to OFF.
Extend the RAT manually by pushing the RAT MAN ON pushbutton, but do not exceed 1 minute. Check on the ECAM the RAT triangle indication changes from white to amber and that the EWD RAT FAULT warning comes on. Monitor the actual RAT extension. At the RAT stow panel select the power ON and do the lamp test.
Manually push the RAT to the extended position and check if the down lock is fully engaged. Inspect the following items:
- RAT actuator spring,
- RAT doors and door spring struts,
- RAT and its components,
- RAT blades (damage limits quoted in AMM),
- RAT freedom to rotate,
- RAT interlock cable and index pin,

Push the RAT warming-flow indicator in the "IN" position and check if the RAT Dpi is also in the "IN" position.
Fit the RAT ground test motor to the RAT and connect it to the external hydraulic power unit, then fit the RAT protective equipment.
Select the ACMS line key on the MCDU. Select the SPECIAL FUNC/ REPROGRAMMING line key. Enter the level 2 password. Select the RAT TEST line key to get access to the ACMS RAT TEST ARMING menu.

G7508471 - G3NT1T0 - FM29Y2LINEMCE03

Operational Test of the RAT Manual Deployment / Inspection / Test with ACMS

Job set-up
...

- ✓ Make sure that the Green hydraulic system is depressurized.
- ⇨ Set the leak measurement valve G to OFF.

...
Procedure

- Operational Test of the Manual RAT Deployment

...

- Aircraft Maintenance Configuration
- Installation of the Ground Support Equipment
- Put the ACMS system in the operational condition
- Spin-Up and Governing Test with the ACMS
- Pump Test with the ACMS
- Anti-Stall Device Test with the ACMS
- Inspection

...
Close-up
...

GREEN HYD. SYSTEM DEPRESSURIZED

(285VU)

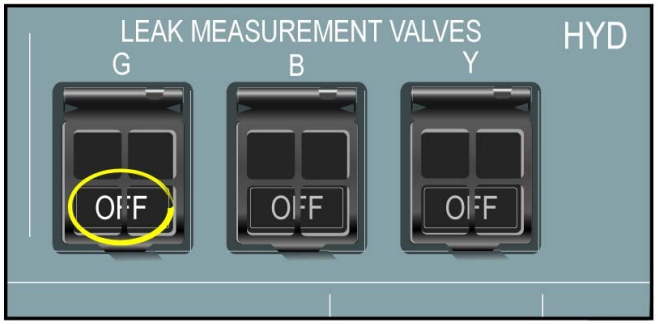

OPERATIONAL TEST OF THE RAT MANUAL DEPLOYMENT / INSPECTION / TEST WITH ACMS - PRE-TEST SET-UP

Operational Test of the RAT Manual Deployment / Inspection / Test with ACMS

✓ **Job set-up**

...

✓ **Make sure that the Green hydraulic system is depressurized.**

✓ **Set the leak measurement valves to OFF.**

...

Procedure

Operational Test of the Manual RAT Deployment

...

On the panel 245VU:
-lift the guard and push the RAT MAN ON pushbutton switch.

NOTE :A second person must check the extension of the RAT.

...
...
...
...
...
...
...
...
...

Close-up

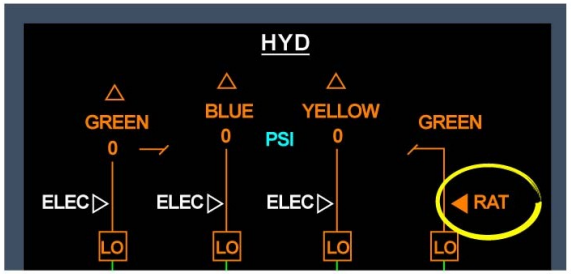

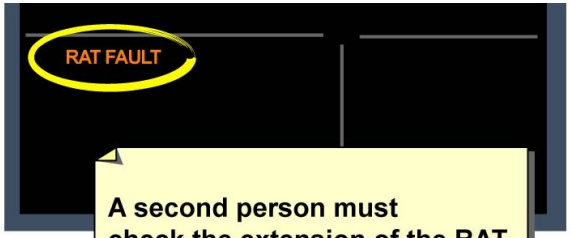

A second person must check the extension of the RAT.

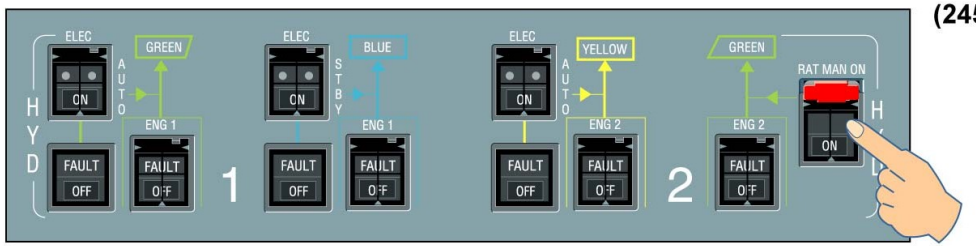

(245VU)

OPERATIONAL TEST OF THE RAT MANUAL DEPLOYMENT / INSPECTION / TEST WITH ACMS - PRE-TEST SET-UP

Operational Test of the RAT Manual Deployment / Inspection / Test with ACMS

✓ **Job set-up**

...

✓ **Make sure that the Green hydraulic system is depressurized.**

✓ **Set the leak measurement valves to OFF.**

...

Procedure

Operational Test of the Manual RAT Deployment

...

On the panel 245VU:
-lift the guard and push the RAT MAN ON pushbutton switch.

NOTE :A second person must check the extension of the RAT.

...
...
...
...
...
...
...
...
...

Close-up

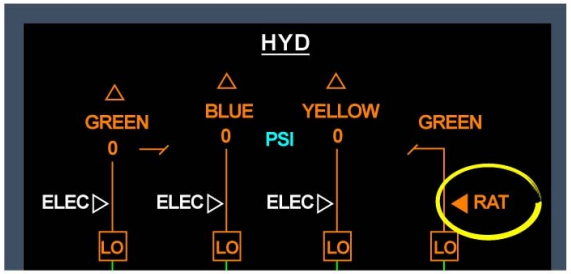

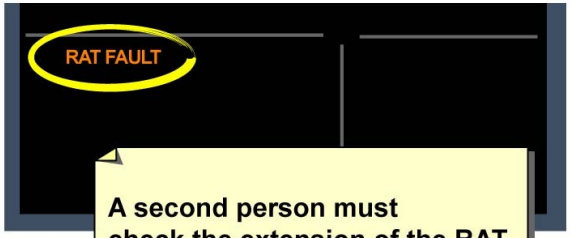

A second person must check the extension of the RAT.

OPERATIONAL TEST OF THE RAT MANUAL DEPLOYMENT / INSPECTION / TEST WITH ACMS - PRE-TEST SET-UP

Operational Test of the RAT Manual Deployment / Inspection / Test with ACMS

✓ **Job set-up**

...

✓ **Make sure that the Green hydraulic system is depressurized.**

✓ **Set the leak measurement valves to OFF.**

...

Procedure

✓ **Operational Test of the Manual RAT Deployment**

...

Aircraft Maintenance Configuration

Manually push the RAT in the retracted direction to make sure that the RAT actuator downlock is engaged.

Make sure that the RAT and the attachment parts are in the correct condition:

...

Check the oil level on the lower and upper gearboxes (the oil level is visible at the sight glass). If the oil level is not visible at the sight glass, add oil.

Manually turn the RAT blades to fine-pitch position against the spring pressure. Release quickly the blades and allow the spring pressure and momentum to push the blades towards the coarse-pitch position. Repeat this action three times and make sure that the blades return back to the stop at the full coarse-pitch position.

Setting of the RAT manifold Indicators:

Make sure that the RAT differential-pressure indicator is in "in" position.

Set the RAT warming-flow indicator from the "out" to the "in" position.

Set the RAT manifold volumetric fuse indicator from the "out" to the "in" position.

...

Close-up

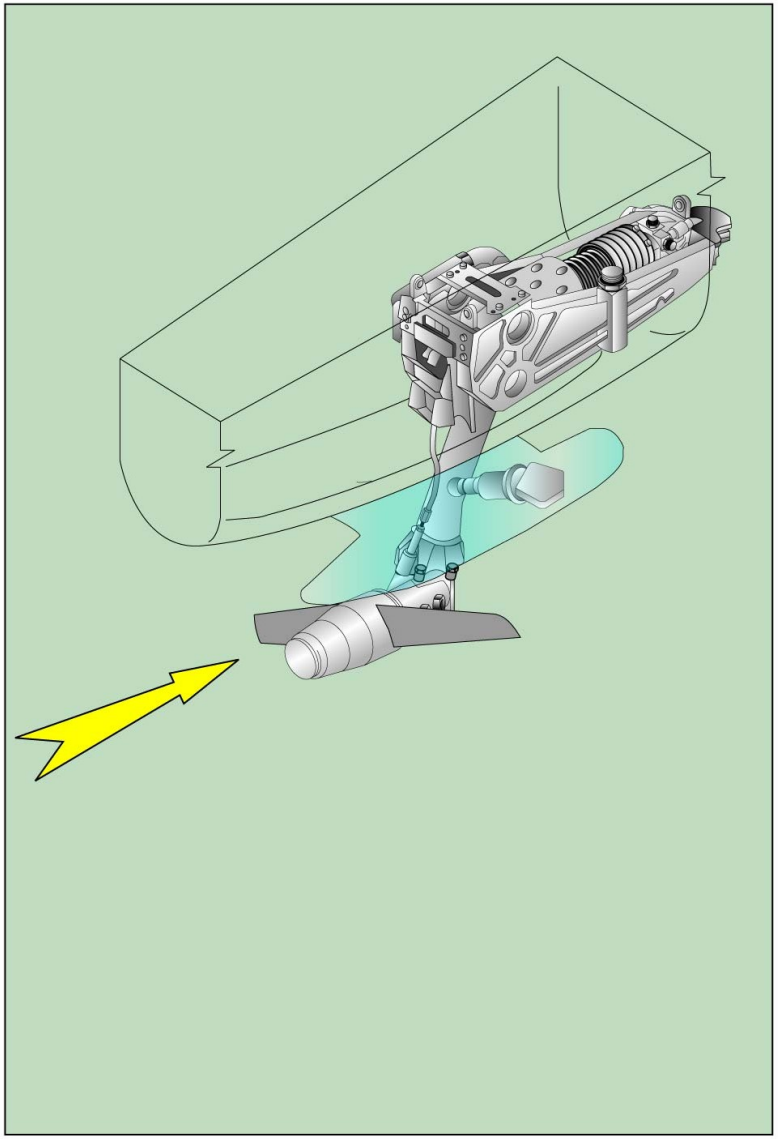

OPERATIONAL TEST OF THE RAT MANUAL DEPLOYMENT / INSPECTION / TEST WITH ACMS - PRE-TEST SET-UP

G7508471 - G3NT1T0 - FM29Y2LINEMCE03

Operational Test of the RAT Manual Deployment / Inspection / Test with ACMS

✓ **Job set-up**

...

✓ **Make sure that the Green hydraulic system is depressurized.**

✓ **Set the leak measurement valves to OFF.**

...

Procedure

✓ **Operational Test of the Manual RAT Deployment**

...

✓ Manually push the RAT in the retracted direction to make sure that the RAT actuator downlock is engaged.

Make sure that the RAT and the attachment parts are in the correct condition:

...

Check the oil level on the lower and upper gearboxes (the oil level is visible at the sight glass). If the oil level is not visible at the sight glass, add oil.

Manually turn the RAT blades to fine-pitch position against the spring pressure. Release quickly the blades and allow the spring pressure and momentum to push the blades towards the coarse-pitch position. Repeat this action three times and make sure that the blades return back to the stop at the full coarse-pitch position.

Setting of the RAT manifold Indicators:

Make sure that the RAT differential-pressure indicator is in "in" position.

Set the RAT warming-flow indicator from the "out" to the "in" position.

Set the RAT manifold volumetric fuse indicator from the "out" to the "in" position.

...

Close-up

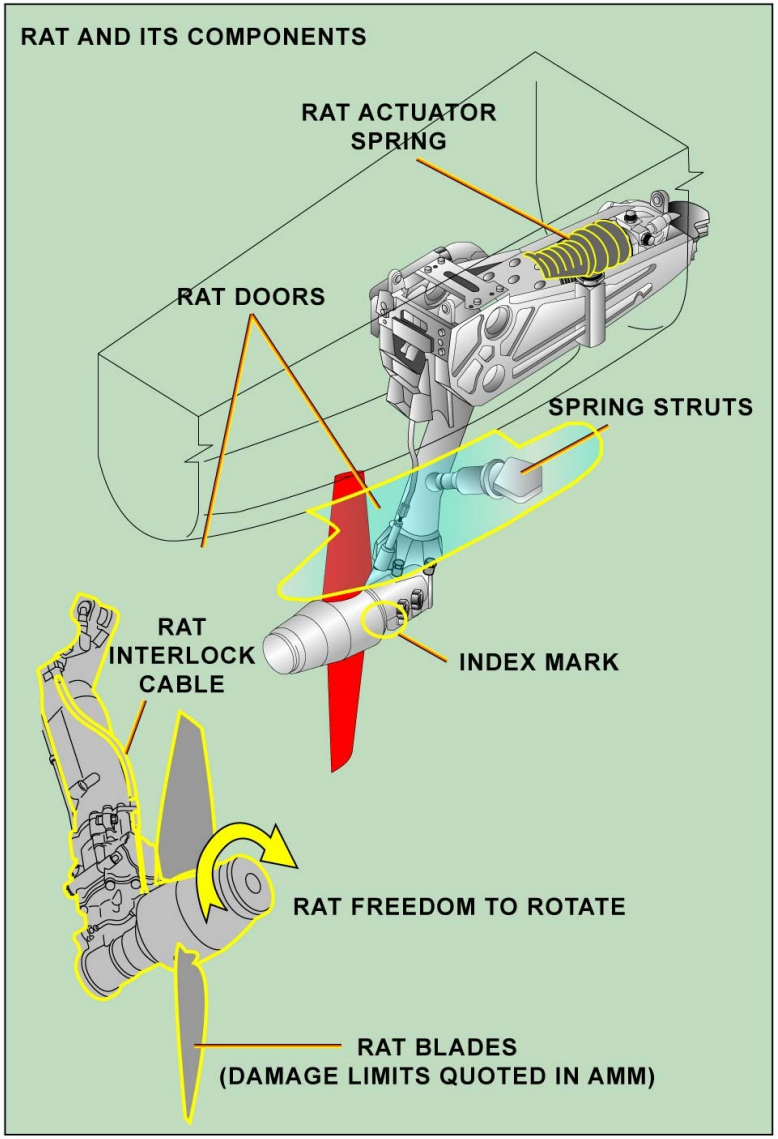

OPERATIONAL TEST OF THE RAT MANUAL DEPLOYMENT / INSPECTION / TEST WITH ACMS - PRE-TEST SET-UP

G7508471 - G3NT1T0 - FM29Y2LINEMCE03

Operational Test of the RAT Manual Deployment / Inspection / Test with ACMS

- ✓ **Job set-up**
  ...
- ✓ **Make sure that the Green hydraulic system is depressurized.**
- ✓ **Set the leak measurement valves to OFF.**
  ...
  Procedure
- ✓ **Operational Test of the Manual RAT Deployment**
  ...

Aircraft Maintenance Configuration

- ✓ Manually push the RAT in the retracted direction to make sure that the RAT actuator downlock is engaged.
- ✓ Make sure that the RAT and the attachment parts are in the correct condition:
  ...
- ✓ Check the oil level on the lower and upper gearboxes (the oil level is visible at the sight glass). If the oil level is not visible at the sight glass, add oil.

Setting of the RAT manifold Indicators :
Make sure that the RAT differential-pressure indicator is in "in" position.
Set the RAT warming-flow indicator from the "out" to the "in" position.
Set the RAT manifold volumetric fuse indicator from the "out" to the "in" position.

...
Close-up

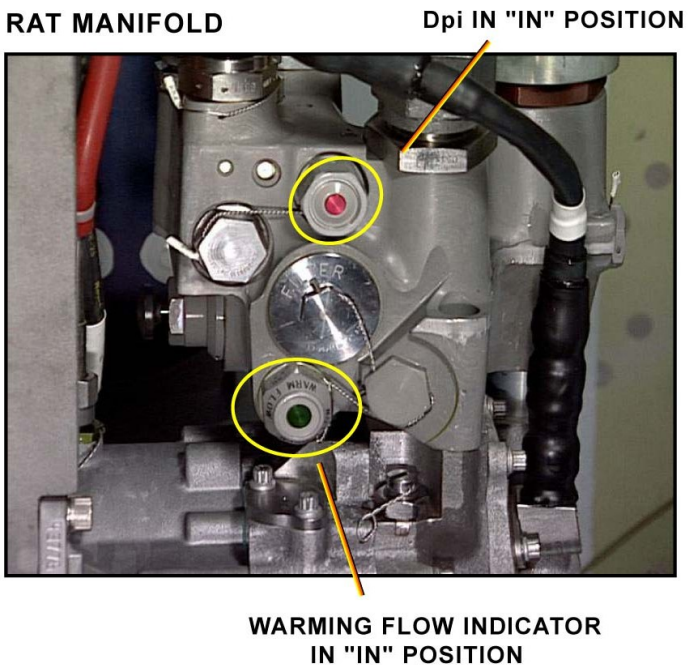

OPERATIONAL TEST OF THE RAT MANUAL DEPLOYMENT / INSPECTION / TEST WITH ACMS - PRE-TEST SET-UP

Operational Test of the RAT Manual Deployment / Inspection / Test with ACMS

- ✓ **Job set-up**
  ...
- ✓ **Make sure that the Green hydraulic system is depressurized.**
- ✓ **Set the leak measurement valves to OFF.**
  ...
  Procedure
- ✓ **Operational Test of the Manual RAT Deployment**
  ...
- ✓ **Aircraft Maintenance Configuration**

Installation of the Ground Support Equipment

...
Install the RAT ground test motor...
...
Connect the hydraulic hoses to the external hydraulic power unit.
...
Install the RAT PROTECTIVE EQUIPMENT.
...

...
Close-up

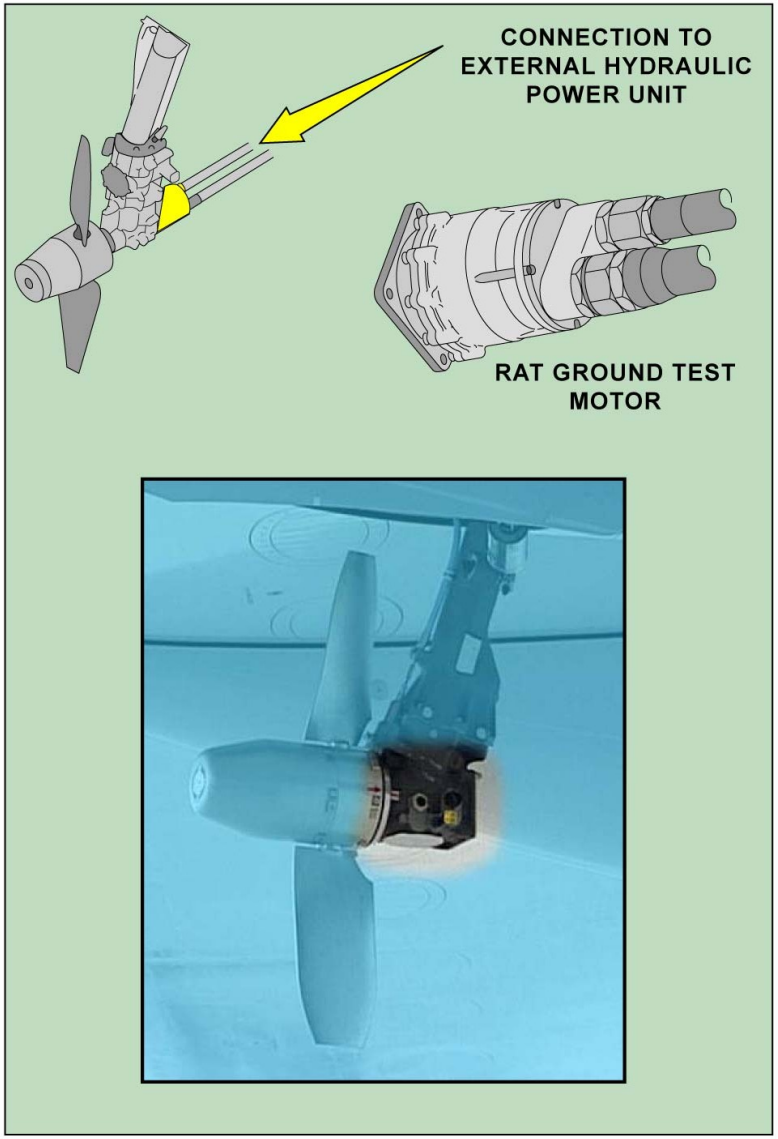

OPERATIONAL TEST OF THE RAT MANUAL DEPLOYMENT / INSPECTION / TEST WITH ACMS - PRE-TEST SET-UP

Operational Test of the RAT Manual Deployment / Inspection / Test with ACMS

- ✓ **Job set-up**
  ...
- ✓ **Make sure that the Green hydraulic system is depressurized.**
- ✓ **Set the leak measurement valves to OFF.**
  ...
  Procedure
- ✓ **Operational Test of the Manual RAT Deployment**
  ...
- ✓ **Aircraft Maintenance Configuration**
- ✓ **Installation of the Ground Support Equipment**

Put the ACMS system in the operation condition

On the MCDU menu:
-push the line key adjacent to the ACMS indication, the ACMS PARAMETER CALL-UP menu appears,
-push the line key adjacent to the SPECIAL FUNCT/ REPROGRAMMING indication, the ACMS: SPECIAL FUNC/ REPROG menu appears,
-enter the level 2 password,
-push the line key adjacent to the RAT TEST indication, the ACMS: RAT TEST ARMING menu appears.

...
Close-up

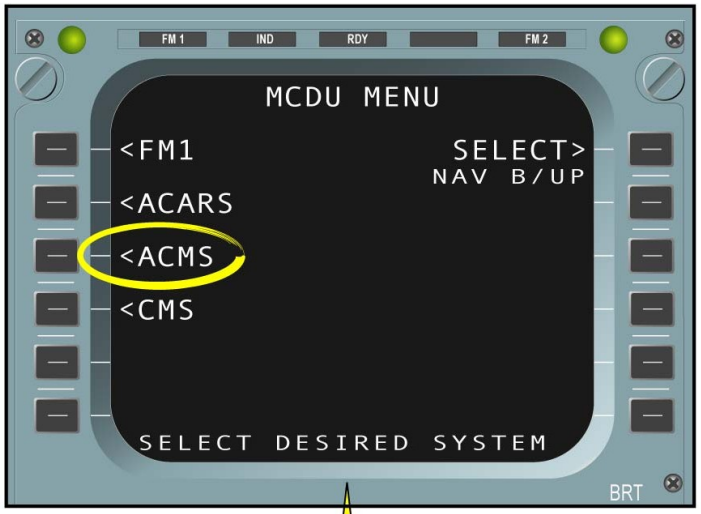

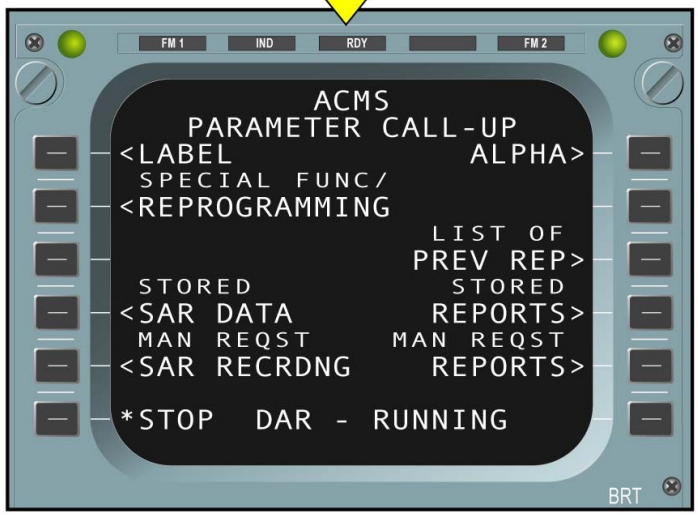

OPERATIONAL TEST OF THE RAT MANUAL DEPLOYMENT / INSPECTION / TEST WITH ACMS - PRE-TEST SET-UP

G7508471 - G3NT1T0 - FM29Y2LINEMCE03

Operational Test of the RAT Manual Deployment / Inspection / Test with ACMS

- ✓ **Job set-up**
  ...
- ✓ **Make sure that the Green hydraulic system is depressurized.**
- ✓ **Set the leak measurement valves to OFF.**
  ...
  Procedure
- ✓ **Operational Test of the Manual RAT Deployment**
  ...
- ✓ **Aircraft Maintenance Configuration**
- ✓ **Installation of the Ground Support Equipment**

Put the ACMS system in the operation condition

✓ On the MCDU menu:
-push the line key adjacent to the ACMS indication, the ACMS PARAMETER CALL-UP menu appears,
-push the line key adjacent to the SPECIAL FUNCT/ REPROGRAMMING indication, the ACMS: SPECIAL FUNC/ REPROG menu appears,
-enter the level 2 password,
-push the line key adjacent to the RAT TEST indication, the ACMS: RAT TEST ARMING menu appears.

...
Close-up

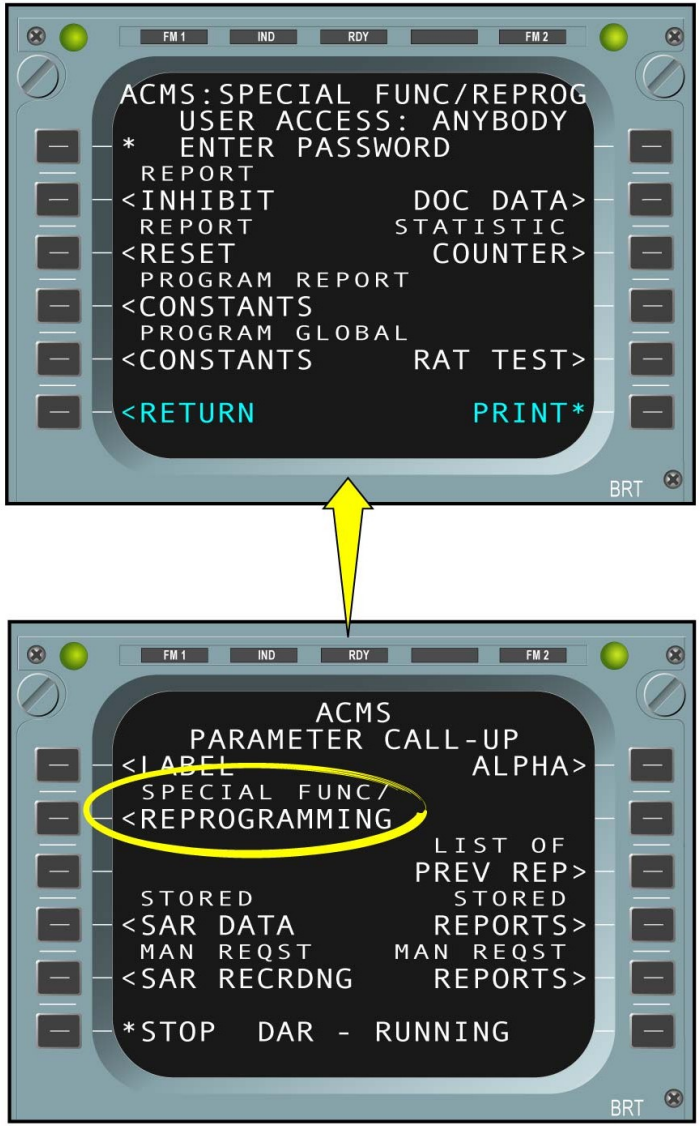

OPERATIONAL TEST OF THE RAT MANUAL DEPLOYMENT / INSPECTION / TEST WITH ACMS - PRE-TEST SET-UP

Operational Test of the RAT Manual Deployment / Inspection / Test with ACMS

- ✓ **Job set-up**
  ...
- ✓ **Make sure that the Green hydraulic system is depressurized.**
- ✓ **Set the leak measurement valves to OFF.**
  ...
  Procedure
- ✓ **Operational Test of the Manual RAT Deployment**
  ...
- ✓ **Aircraft Maintenance Configuration**
- ✓ **Installation of the Ground Support Equipment**

Put the ACMS system in the operation condition

On the MCDU menu:
- ✓ -push the line key adjacent to the ACMS indication, the ACMS PARAMETER CALL-UP menu appears,
- ✓ -push the line key adjacent to the SPECIAL FUNCT/ REPROGRAMMING indication, the ACMS: SPECIAL FUNC/ REPROG menu appears,
- ⇨ -enter the level 2 password,
  -push the line key adjacent to the RAT TEST indication, the ACMS: RAT TEST ARMING menu appears.

...
Close-up

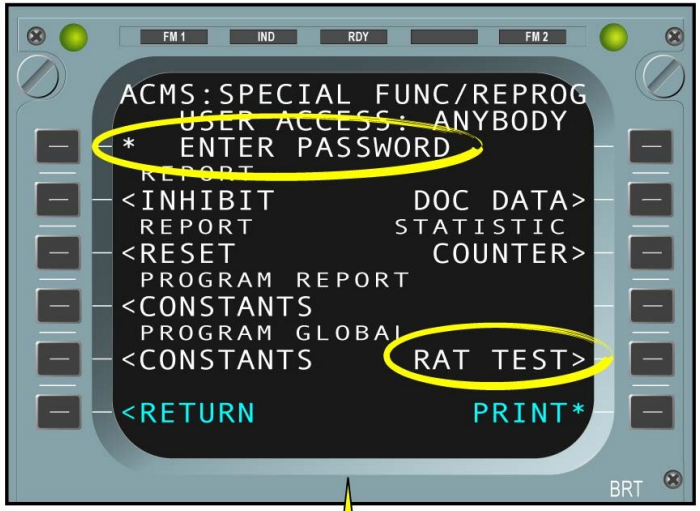

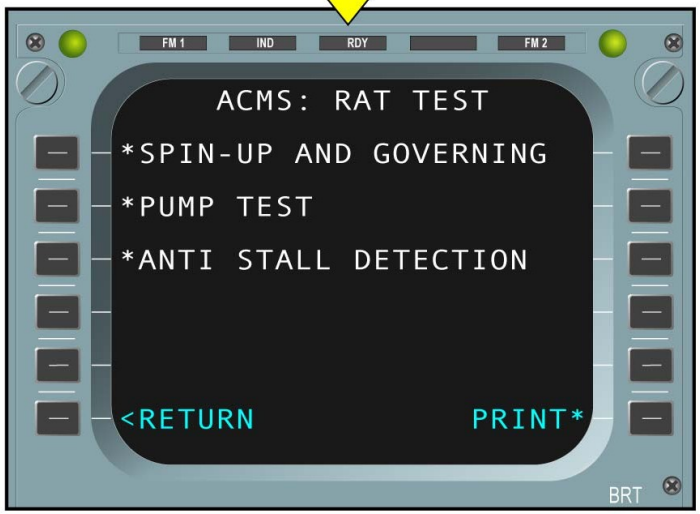

OPERATIONAL TEST OF THE RAT MANUAL DEPLOYMENT / INSPECTION / TEST WITH ACMS - PRE-TEST SET-UP

This Page Intentionally Left Blank

G7508471 - G3NT1T0 - FM29Y2LINEMCE03

RAM AIR TURBINE MAN DEPLOYMENT SYS LINE MAINT (2)

OPERATIONAL TEST OF THE RAT MANUAL DEPLOYMENT / INSPECTION / TEST WITH ACMS (continued)

SPIN-UP AND GOVERNING TEST

Pressurize the green hydraulic system with the ELEC pump and check that the RAT blades do not move. The RAT symbol remains amber on the ECAM display.
On the MCDU select the SPIN-UP AND GOVERNING line key, the remaining arming time will be displayed.

NOTE: The next step must be done within 5 minutes or the procedure has to be started all over again.

On the external hydraulic unit, supply a pressure of 3000 psi at a maximum flow of 120 l/min. Check the RAT turns at around 5100 rpm and its ECAM symbol changes to green.
On the MCDU, select RETURN twice to display the ACMS PARAMETER CALL UP menu. Select the STORED REPORTS line key, then the LAST STORED REPORTS line key. The RAT Test Report is printed out and shows:
- "TEST CONDITION OK",
- "SPIN UP TEST OK",
- "GOVERNING TEST OK".

Select RETURN to display the ACMS PARAMETER CALL UP menu.

G7508471 - G3NT1T0 - FM29Y2LINEMCE03

Operational Test of the RAT Manual Deployment / Inspection / Test with ACMS

- ✓ **Job set-up**
  ...
  Procedure
- ✓ **Operational Test of the Manual RAT Deployment**
  ...
- ✓ **Aircraft Maintenance Configuration**
- ✓ **Installation of the Ground Support Equipment**
- ✓ **Put the ACMS system in the operation condition**

Spin-Up and Governing Test with the ACMS

On the ECAM control panel:
✓ -push the HYD key.
Pressurize the Green hydraulic system with the electric pump.
On the MCDU:
-push the line key adjacent to the SPIN-UP AND GOVERNING indication.
...
On the hydraulic ground-power cart:
...
-supply a pressure of approx. 206 bar (2987 psi) and more than 120 l.min (31 USgal.mn) to the RAT ground test motor within 3 seconds.
...
On the MCDU:
...

...
Close-up
...

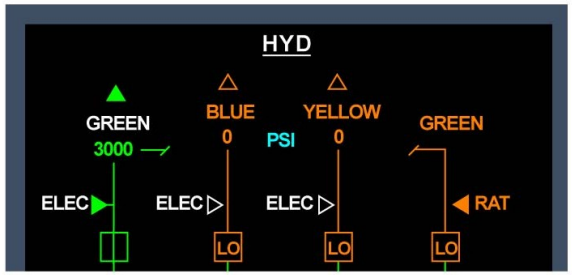

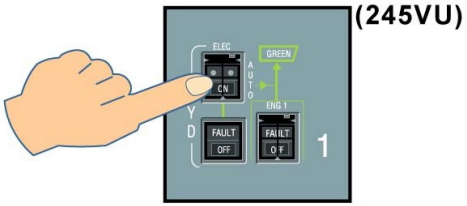

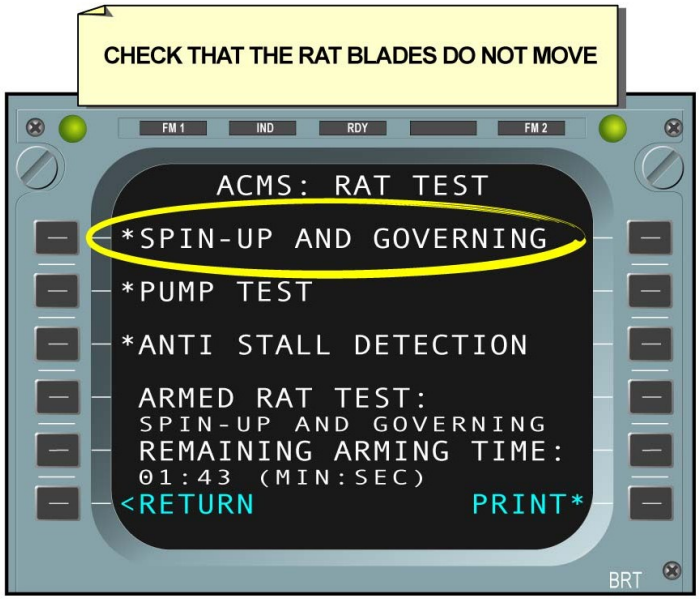

OPERATIONAL TEST OF THE RAT MANUAL DEPLOYMENT / INSPECTION / TEST WITH ACMS - SPIN-UP AND GOVERNING TEST

Operational Test of the RAT Manual Deployment / Inspection / Test with ACMS

- ✓ **Job set-up**
  ...
  Procedure
- ✓ **Operational Test of the Manual RAT Deployment**
  ...
- ✓ **Aircraft Maintenance Configuration**
- ✓ **Installation of the Ground Support Equipment**
- ✓ **Put the ACMS system in the operation condition**

Spin-Up and Governing Test with the ACMS

On the ECAM control panel:
✓ -push the HYD key.
Pressurize the Green hydraulic system with the electric pump.
On the MCDU:
✓ -push the line key adjacent to the SPIN-UP AND GOVERNING indication.
...
On the hydraulic ground-power cart:
...
➡ -supply a pressure of approx. 206 bar (2987 psi) and more than 120 l.min (31 USgal.mn) to the RAT ground test motor within 3 seconds.
...
On the MCDU:
...
...
Close-up
...

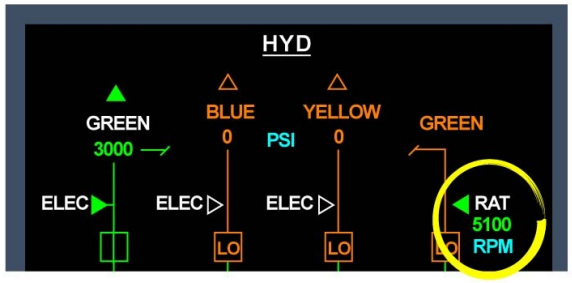

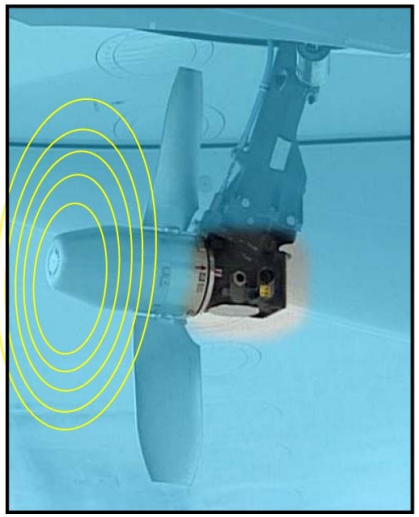

EXTERNAL HYDRAULIC UNIT SUPPLY

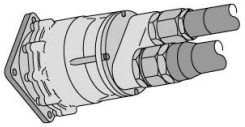

OPERATIONAL TEST OF THE RAT MANUAL DEPLOYMENT / INSPECTION / TEST WITH ACMS - SPIN-UP AND GOVERNING TEST

Operational Test of the RAT Manual Deployment / Inspection / Test with ACMS

- ✓ **Job set-up**
  ...
  Procedure
- ✓ **Operational Test of the Manual RAT Deployment**
  ...
- ✓ **Aircraft Maintenance Configuration**
- ✓ **Installation of the Ground Support Equipment**
- ✓ **Put the ACMS system in the operation condition**

Spin-Up and Governing Test with the ACMS

On the ECAM control panel:
✓ -push the HYD key.
Pressurize the Green hydraulic system with the electric pump.
On the MCDU:
✓ -push the line key adjacent to the SPIN-UP AND GOVERNING indication.
...
✓ On the hydraulic ground-power cart:
...
On the MCDU:
-push the line key adjacent to the RETURN indication twice.
-push the line key adjacent to the STORED REPORTS indication.
-push the line key adjacent to the LAST STORED REPORTS.
-push the line key adjacent to the RETURN indication.
...
Close-up
...

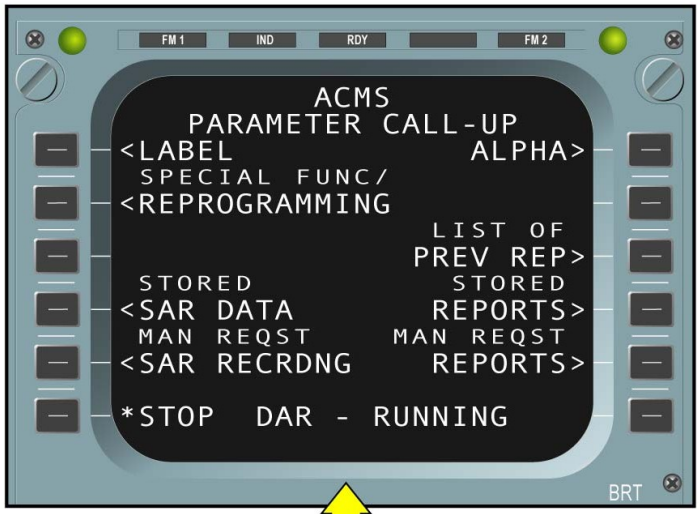

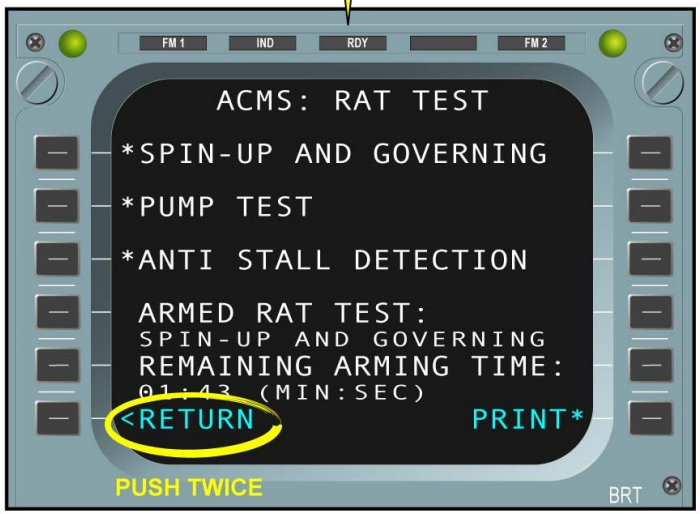

OPERATIONAL TEST OF THE RAT MANUAL DEPLOYMENT / INSPECTION / TEST WITH ACMS - SPIN-UP AND GOVERNING TEST

Operational Test of the RAT Manual Deployment / Inspection / Test with ACMS

- ✓ **Job set-up**
  ...
  Procedure
- ✓ **Operational Test of the Manual RAT Deployment**
  ...
- ✓ **Aircraft Maintenance Configuration**
- ✓ **Installation of the Ground Support Equipment**
- ✓ **Put the ACMS system in the operation condition**

Spin-Up and Governing Test with the ACMS

On the ECAM control panel:
✓ -push the HYD key.
Pressurize the Green hydraulic system with the electric pump.
On the MCDU:
✓ -push the line key adjacent to the SPIN-UP AND GOVERNING indication.
...
✓ On the hydraulic ground-power cart:
...
✓ On the MCDU:
-push the line key adjacent to the RETURN indication twice.
➡ -push the line key adjacent to the STORED REPORTS indication.
-push the line key adjacent to the LAST STORED REPORTS.
-push the line key adjacent to the RETURN indication.

...
Close-up
...

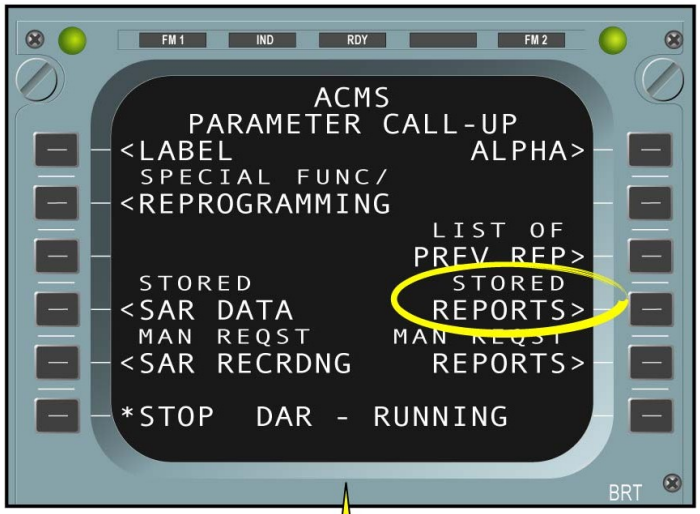

OPERATIONAL TEST OF THE RAT MANUAL DEPLOYMENT / INSPECTION / TEST WITH ACMS - SPIN-UP AND GOVERNING TEST

Operational Test of the RAT Manual Deployment / Inspection / Test with ACMS

- ✓ **Job set-up**
  ...
  Procedure
- ✓ **Operational Test of the Manual RAT Deployment**
  ...
- ✓ **Aircraft Maintenance Configuration**
- ✓ **Installation of the Ground Support Equipment**
- ✓ **Put the ACMS system in the operation condition**

Spin-Up and Governing Test with the ACMS

On the ECAM control panel:
- ✓ -push the HYD key.
  Pressurize the Green hydraulic system with the electric pump.

On the MCDU:
- ✓ -push the line key adjacent to the SPIN-UP AND GOVERNING indication.
  ...
- ✓ On the hydraulic ground-power cart:
  ...
- ✓ On the MCDU:
  -push the line key adjacent to the RETURN indication twice.
- ✓ -push the line key adjacent to the STORED REPORTS indication.
- ➡ -push the line key adjacent to the LAST STORED REPORTS.
  -push the line key adjacent to the RETURN indication.

...
Close-up
...

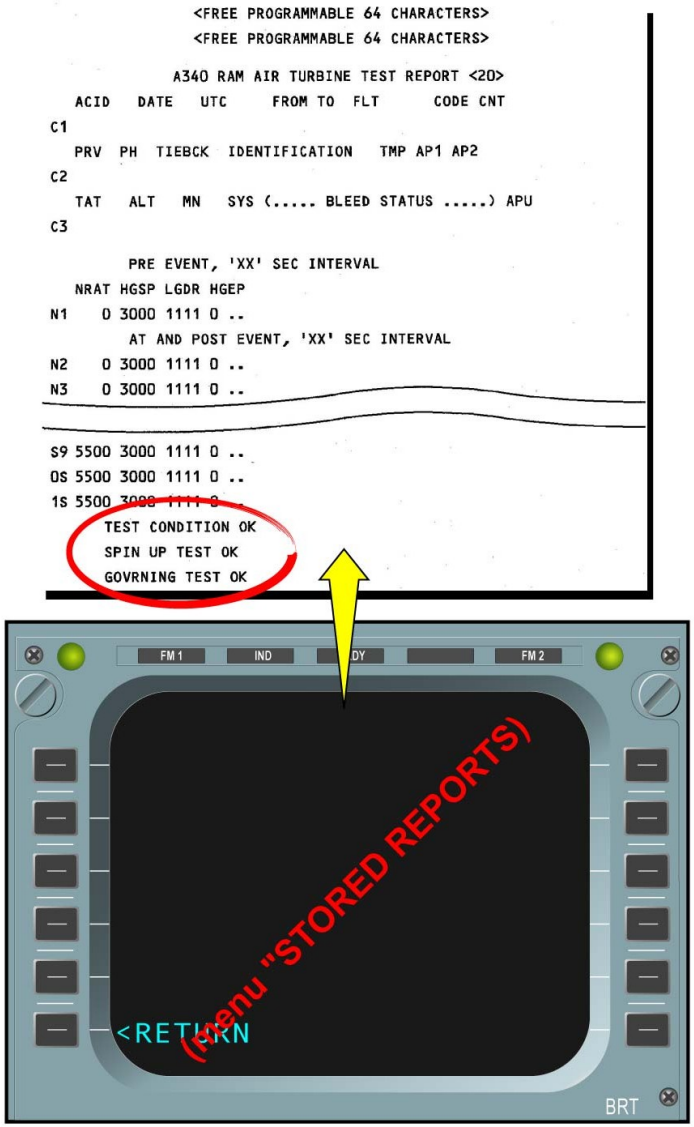

OPERATIONAL TEST OF THE RAT MANUAL DEPLOYMENT / INSPECTION / TEST WITH ACMS - SPIN-UP AND GOVERNING TEST

Operational Test of the RAT Manual Deployment / Inspection / Test with ACMS

- ✓ **Job set-up**
  ...
  Procedure
- ✓ **Operational Test of the Manual RAT Deployment**
  ...
- ✓ **Aircraft Maintenance Configuration**
- ✓ **Installation of the Ground Support Equipment**
- ✓ **Put the ACMS system in the operation condition**

Spin-Up and Governing Test with the ACMS

On the ECAM control panel:
- ✓ -push the HYD key.
  Pressurize the Green hydraulic system with the electric pump.

On the MCDU:
- ✓ -push the line key adjacent to the SPIN-UP AND GOVERNING indication.
  ...
- ✓ On the hydraulic ground-power cart:
  ...
- ✓ On the MCDU:
  -push the line key adjacent to the RETURN indication twice.
- ✓ -push the line key adjacent to the STORED REPORTS indication.
- ✓ -push the line key adjacent to the LAST STORED REPORTS.
- ➡ -push the line key adjacent to the RETURN indication.

...
Close-up
...

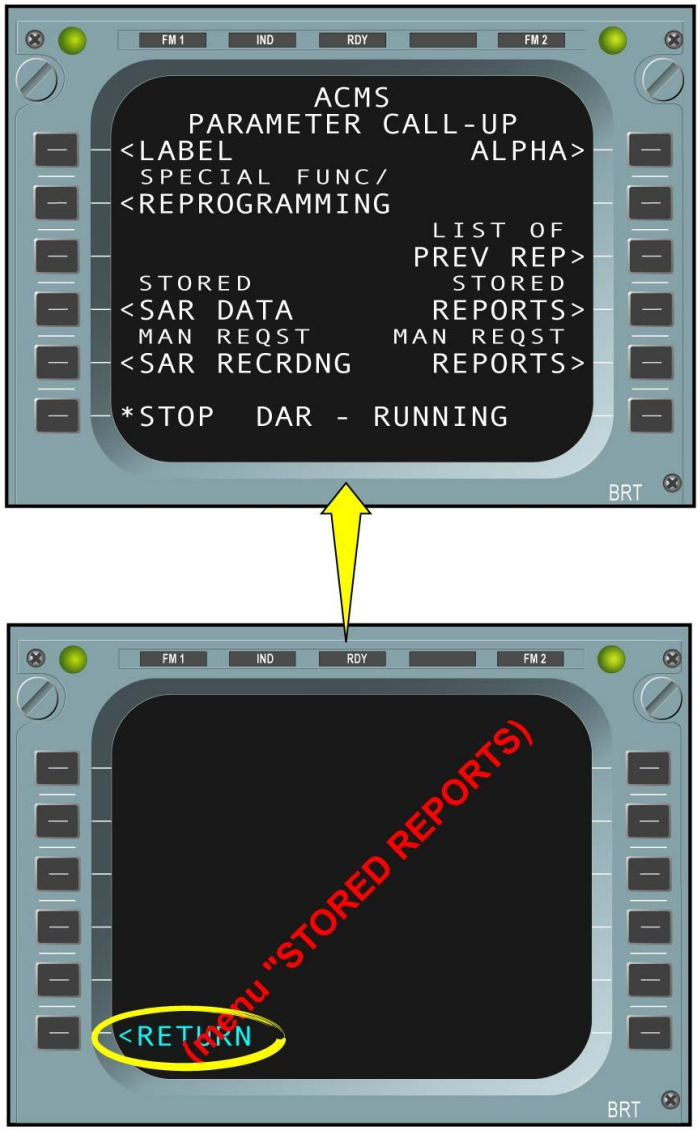

OPERATIONAL TEST OF THE RAT MANUAL DEPLOYMENT / INSPECTION / TEST WITH ACMS - SPIN-UP AND GOVERNING TEST

This Page Intentionally Left Blank

G7508471 - G3NT1T0 - FM29Y2LINEMCE03

RAM AIR TURBINE MAN DEPLOYMENT SYS LINE MAINT (2)

OPERATIONAL TEST OF THE RAT MANUAL DEPLOYMENT / INSPECTION / TEST WITH ACMS (continued)

PUMP TEST

Depressurize the green hydraulic system.
On the MCDU, get access to the ACMS RAT TEST menu as you did for the SPIN-UP AND GOVERNING TEST and then select the PUMP TEST line key.
Close the LH side MLG door.
On the MCDU, get access to the last stored report as you did for the SPIN-UP AND GOVERNING TEST to obtain a printout as soon as the LH MLG door is locked.
"TEST CONDITION OK"
"PUMP TEST OK"
Select RETURN to display the ACMS PARAMETER CALL UP menu.

G7508471 - G3NT1T0 - FM29Y2LINEMCE03

Operational Test of the RAT Manual Deployment / Inspection / Test with ACMS

- ✓ Job set-up
  ...
  Procedure
- ✓ Operational Test of the Manual RAT Deployment
  ...
- ✓ Aircraft Maintenance Configuration
- ✓ Installation of the Ground Support Equipment
- ✓ Put the ACMS system in the operation condition
- ✓ Spin-Up and Governing Test with the ACMS

Pump Test with the ACMS

✓ Depressurize the Green hydraulic system with the electric pump.

On the MCDU:
...
-push the line key adjacent to the PUMP TEST indication.

On the MLG control panel:
-set the LH MLG door handle in the closed position.

On the MCDU:
...
-push the line key adjacent to the LAST STORED REPORTS.
-push the line key adjacent to the RETURN indication.

...
Close-up
...

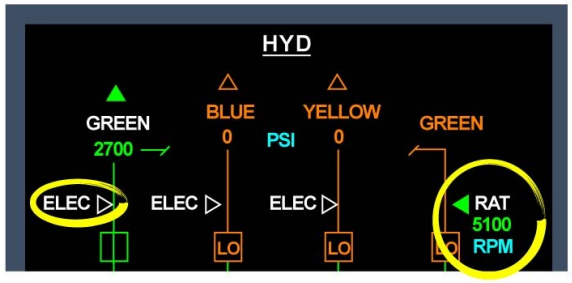

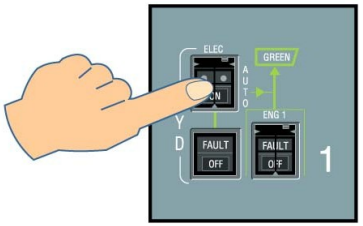

(245VU)

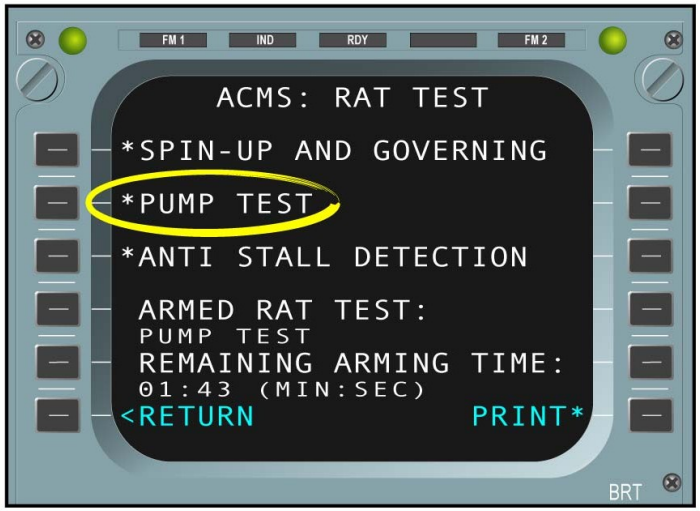

OPERATIONAL TEST OF THE RAT MANUAL DEPLOYMENT / INSPECTION / TEST WITH ACMS - PUMP TEST

G7508471 - G3NT1T0 - FM29Y2LINEMCE03

Operational Test of the RAT Manual Deployment / Inspection / Test with ACMS

- ✓ **Job set-up**
  ...
  Procedure
- ✓ **Operational Test of the Manual RAT Deployment**
  ...
- ✓ **Aircraft Maintenance Configuration**
- ✓ **Installation of the Ground Support Equipment**
- ✓ **Put the ACMS system in the operation condition**
- ✓ **Spin-Up and Governing Test with the ACMS**

Pump Test with the ACMS

- ✓ Depressurize the Green hydraulic system with the electric pump.
- ✓ On the MCDU:
  ...
  -push the line key adjacent to the PUMP TEST indication.
- ➡ On the MLG control panel:
  -set the LH MLG door handle in the closed position.
- On the MCDU:
  ...
  -push the line key adjacent to the LAST STORED REPORTS.
  -push the line key adjacent to the RETURN indication.

...
Close-up
...

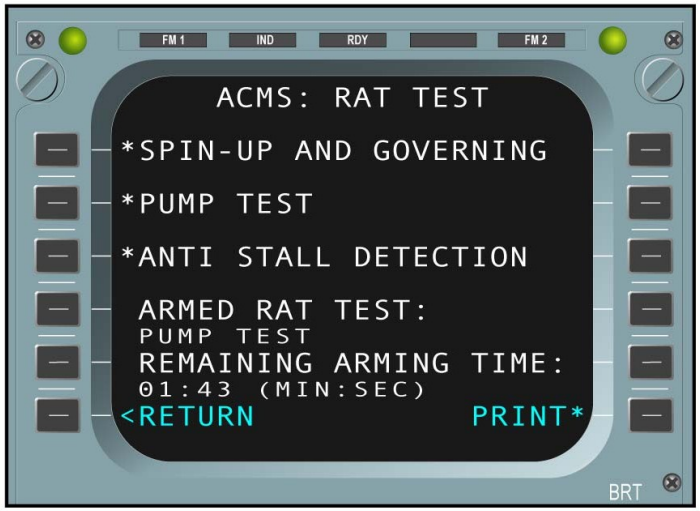

OPERATIONAL TEST OF THE RAT MANUAL DEPLOYMENT / INSPECTION / TEST WITH ACMS - PUMP TEST

G7508471 - G3NT1T0 - FM29Y2LINEMCE03

Operational Test of the RAT Manual Deployment / Inspection / Test with ACMS

- ✓ **Job set-up**
  ...
  Procedure
- ✓ **Operational Test of the Manual RAT Deployment**
  ...
- ✓ **Aircraft Maintenance Configuration**
- ✓ **Installation of the Ground Support Equipment**
- ✓ **Put the ACMS system in the operation condition**
- ✓ **Spin-Up and Governing Test with the ACMS**

Pump Test with the ACMS

- ✓ Depressurize the Green hydraulic system with the electric pump.
- ✓ On the MCDU:
  ...
  -push the line key adjacent to the PUMP TEST indication.
- ✓ On the MLG control panel:
  -set the LH MLG door handle in the closed position.
- ⇨ On the MCDU:
  ...
  -push the line key adjacent to the LAST STORED REPORTS.
  -push the line key adjacent to the RETURN indication.

...
Close-up
...

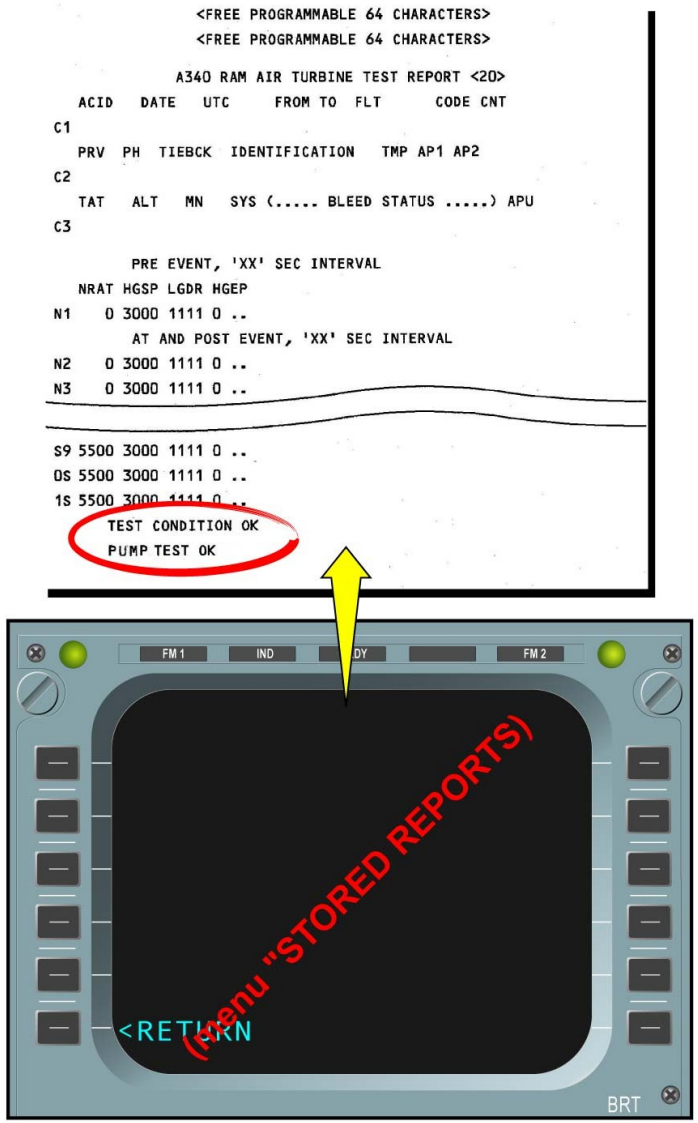

OPERATIONAL TEST OF THE RAT MANUAL DEPLOYMENT / INSPECTION / TEST WITH ACMS - PUMP TEST

Operational Test of the RAT Manual Deployment / Inspection / Test with ACMS

- ✓ **Job set-up**
  ...
  Procedure
- ✓ **Operational Test of the Manual RAT Deployment**
  ...
- ✓ **Aircraft Maintenance Configuration**
- ✓ **Installation of the Ground Support Equipment**
- ✓ **Put the ACMS system in the operation condition**
- ✓ **Spin-Up and Governing Test with the ACMS**

Pump Test with the ACMS

- ✓ Depressurize the Green hydraulic system with the electric pump.
- ✓ On the MCDU:
  ...
  -push the line key adjacent to the PUMP TEST indication.
- ✓ On the MLG control panel:
  -set the LH MLG door handle in the closed position.
  On the MCDU:
  ...
- ✓ -push the line key adjacent to the LAST STORED REPORTS.
- ➡ -push the line key adjacent to the RETURN indication.

...
Close-up
...

```
                <FREE PROGRAMMABLE 64 CHARACTERS>
                <FREE PROGRAMMABLE 64 CHARACTERS>

              A340 RAM AIR TURBINE TEST REPORT <20>
   ACID   DATE   UTC     FROM TO  FLT      CODE CNT
C1
   PRV  PH  TIEBCK  IDENTIFICATION   TMP AP1 AP2
C2
   TAT   ALT   MN   SYS (..... BLEED STATUS .....) APU
C3

         PRE EVENT, 'XX' SEC INTERVAL
   NRAT HGSP LGDR HGEP
N1    0 3000 1111 0 ..
         AT AND POST EVENT, 'XX' SEC INTERVAL
N2    0 3000 1111 0 ..
N3    0 3000 1111 0 ..

S9 5500 3000 1111 0 ..
0S 5500 3000 1111 0 ..
1S 5500 3000 1111 0 ..
    TEST CONDITION OK
    PUMP TEST OK
```

OPERATIONAL TEST OF THE RAT MANUAL DEPLOYMENT / INSPECTION / TEST WITH ACMS - PUMP TEST

This Page Intentionally Left Blank

G7508471 - G3NT1T0 - FM29Y2LINEMCE03

RAM AIR TURBINE MAN DEPLOYMENT SYS LINE MAINT (2)

OPERATIONAL TEST OF THE RAT MANUAL DEPLOYMENT / INSPECTION / TEST WITH ACMS (continued)

ANTI-STALL DEVICE TEST

Reduce the hydraulic ground cart pressure to obtain a RAT speed of 4500 rpm (typically max. 2610 psi).
On the MCDU, get access to the ACMS RAT TEST menu as you did for the SPIN-UP AND GOVERNING TEST and then select the ANTI STALL DETECTION line key.
Close the RH MLG door.
On the MCDU, get access to the last stored report as you did for the SPIN-UP AND GOVERNING TEST to obtain a printout as soon as the RH LG door is locked.
"TEST CONDITION OK"
"ANTI STALL DEVICE TEST OK"
Select RETURN twice to display the MCDU main menu.
Depressurize the external hydraulic supply and remove the RAT protective equipment and the RAT ground test motor from the RAT assembly.

Operational Test of the RAT Manual Deployment / Inspection / Test with ACMS

- ✓ Job set-up
- ...
- Procedure
- ✓ Operational Test of the Manual RAT Deployment
- ...
- ✓ Aircraft Maintenance Configuration
- ✓ Installation of the Ground Support Equipment
- ✓ Put the ACMS system in the operation condition
- ✓ Spin-Up and Governing Test with the ACMS
- ✓ Pump Test with the ACMS

Anti-Stall Device Test with the ACMS

On the hydraulic ground-power cart:
-decrease the hydraulic pressure to get a RAT speed of 4500 +/- 100 rpm.
On the MCDU:
...
-push the line key adjacent to the ANTI STALL DETECTION indication.
On the MLG control panel:
...

...
Close-up
...

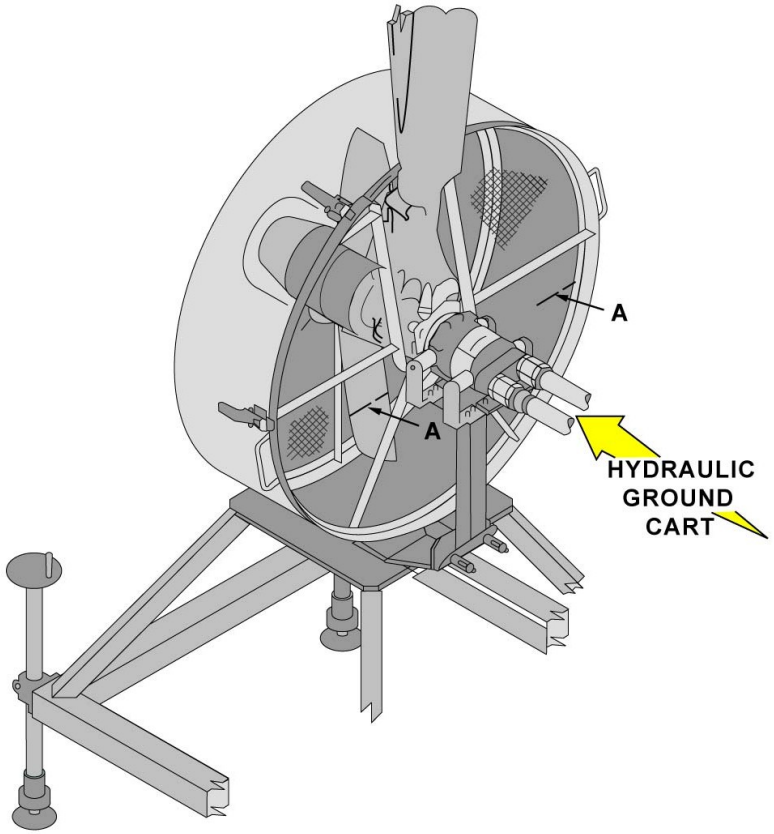

OPERATIONAL TEST OF THE RAT MANUAL DEPLOYMENT / INSPECTION / TEST WITH ACMS - ANTI-STALL DEVICE TEST

Operational Test of the RAT Manual Deployment / Inspection / Test with ACMS

- ✓ Job set-up
  ...
  Procedure
- ✓ Operational Test of the Manual RAT Deployment
  ...
- ✓ Aircraft Maintenance Configuration
- ✓ Installation of the Ground Support Equipment
- ✓ Put the ACMS system in the operation condition
- ✓ Spin-Up and Governing Test with the ACMS
- ✓ Pump Test with the ACMS

Anti-Stall Device Test with the ACMS

- ✓ On the hydraulic ground-power cart:
  ...
- ✓ On the MCDU:
  ...
- ⇨ On the MLG control panel:
  -set the RH MLG door handle in the closed position.
  On the MCDU:
  ...
  -push the line key adjacent to the last stored report.

...
Close-up
...

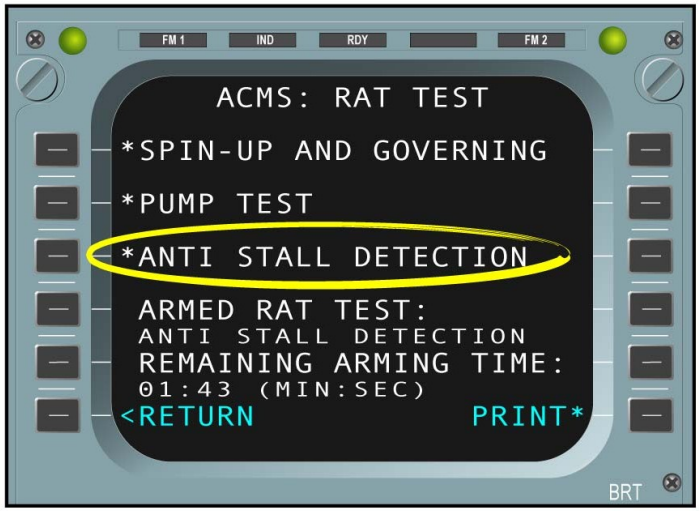

OPERATIONAL TEST OF THE RAT MANUAL DEPLOYMENT / INSPECTION / TEST WITH ACMS - ANTI-STALL DEVICE TEST

G7508471 - G3NT1T0 - FM29Y2LINEMCE03

Operational Test of the RAT Manual Deployment / Inspection / Test with ACMS

- ✓ Job set-up
  ...
  Procedure
- ✓ Operational Test of the Manual RAT Deployment
  ...
- ✓ Aircraft Maintenance Configuration
- ✓ Installation of the Ground Support Equipment
- ✓ Put the ACMS system in the operation condition
- ✓ Spin-Up and Governing Test with the ACMS
- ✓ Pump Test with the ACMS

Anti-Stall Device Test with the ACMS

- ✓ On the hydraulic ground-power cart: ...
- ✓ On the MCDU: ...
- ✓ On the MLG control panel: ...
- ⇨ On the MCDU:
  ...
  -push the line key adjacent to the last stored report.
  On the MCDU:
  -push the line key adjacent to the RETURN indication twice.
  ...

...
Close-up
...

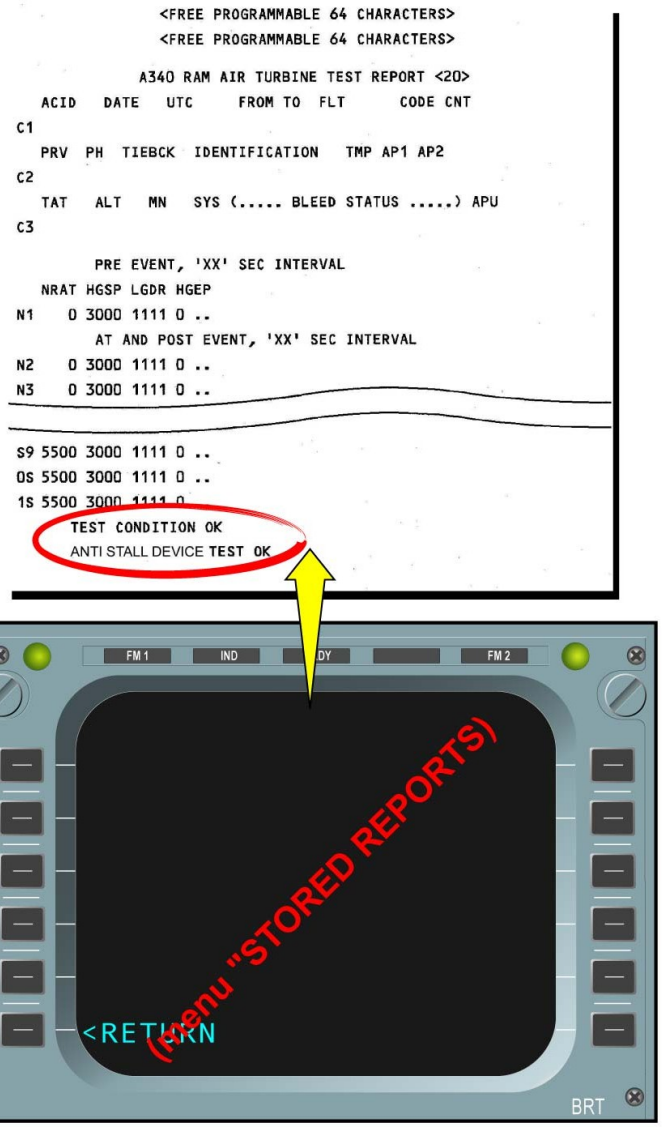

OPERATIONAL TEST OF THE RAT MANUAL DEPLOYMENT / INSPECTION / TEST WITH ACMS - ANTI-STALL DEVICE TEST

Operational Test of the RAT Manual Deployment / Inspection / Test with ACMS

- ✓ Job set-up
- ...
- Procedure
- ✓ Operational Test of the Manual RAT Deployment
- ...
- ✓ Aircraft Maintenance Configuration
- ✓ Installation of the Ground Support Equipment
- ✓ Put the ACMS system in the operation condition
- ✓ Spin-Up and Governing Test with the ACMS
- ✓ Pump Test with the ACMS

Anti-Stall Device Test with the ACMS

- ✓ On the hydraulic ground-power cart: ...
- ✓ On the MCDU: ...
- ✓ On the MLG control panel: ...
- ✓ On the MCDU: ...
- ⇨ On the MCDU:
  -push the line key adjacent to the RETURN indication twice.
- Depressurize the hydraulic supply to the RAT ground test motor.
- ...

...
Close-up
...

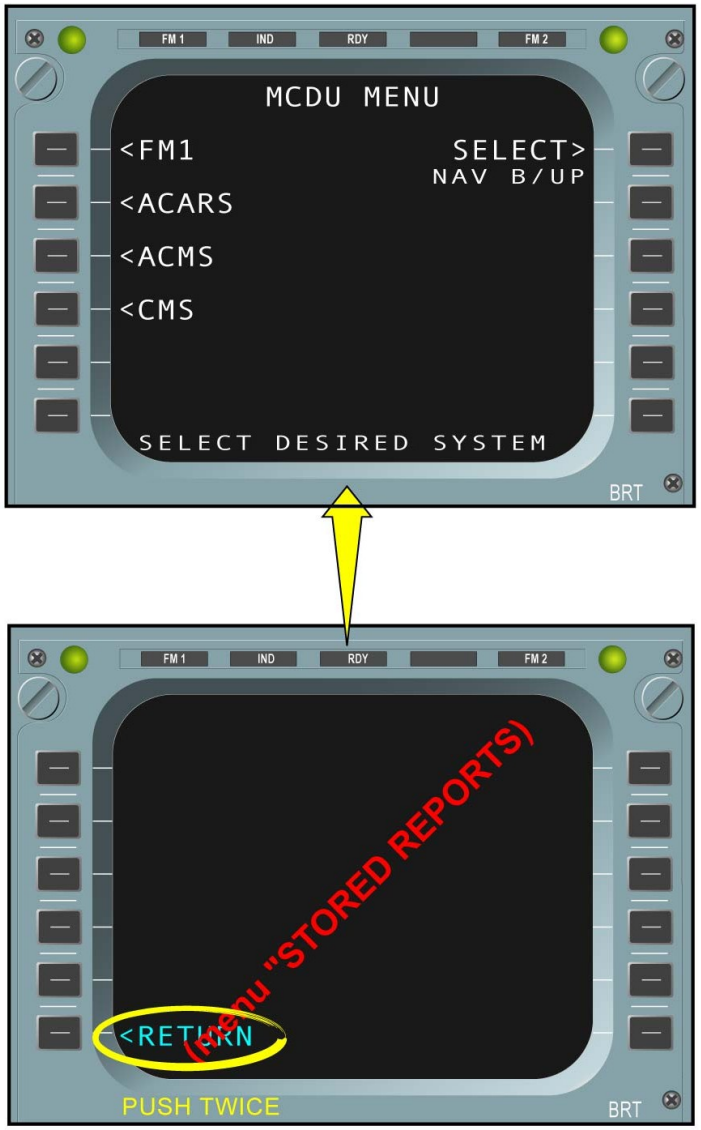

OPERATIONAL TEST OF THE RAT MANUAL DEPLOYMENT / INSPECTION / TEST WITH ACMS - ANTI-STALL DEVICE TEST

G7508471 - G3NT1T0 - FM29Y2LINEMCE03

Operational Test of the RAT Manual Deployment / Inspection / Test with ACMS

- ✓ Job set-up
- ...
- Procedure
- ✓ Operational Test of the Manual RAT Deployment
- ...
- ✓ Aircraft Maintenance Configuration
- ✓ Installation of the Ground Support Equipment
- ✓ Put the ACMS system in the operation condition
- ✓ Spin-Up and Governing Test with the ACMS
- ✓ Pump Test with the ACMS

Anti-Stall Device Test with the ACMS

- ✓ On the hydraulic ground-power cart: ...
- ✓ On the MCDU: ...
- ✓ On the MLG control panel: ...
- ✓ On the MCDU: ...
- ✓ On the MCDU: ...
- ⇨ Depressurize the hydraulic supply to the RAT ground test motor.
  Remove the RAT protective equipment.
  Remove the RAT ground test motor.

...
Close-up
...

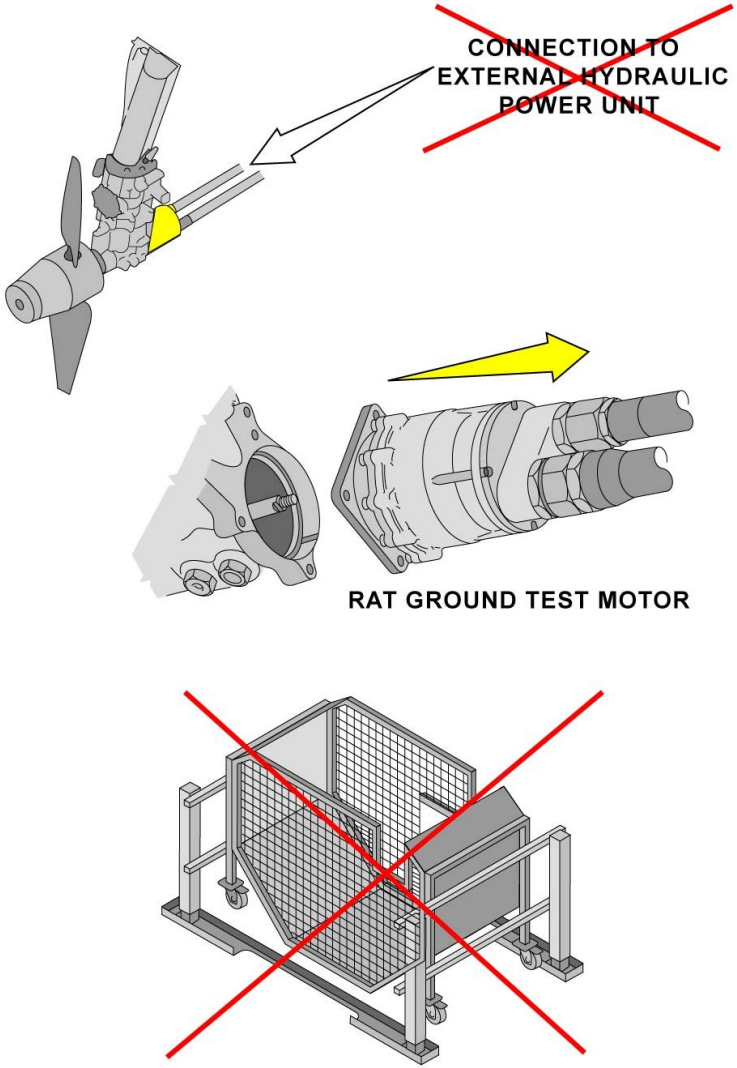

OPERATIONAL TEST OF THE RAT MANUAL DEPLOYMENT / INSPECTION / TEST WITH ACMS - ANTI-STALL DEVICE TEST

RAM AIR TURBINE MAN DEPLOYMENT SYS LINE MAINT (2)

OPERATIONAL TEST OF THE RAT MANUAL DEPLOYMENT / INSPECTION / TEST WITH ACMS (continued)

VISUAL INSPECTION AND CLOSE-UP

Check that the RAT warming flow indicator is in "OUT" position and the RAT Dpi is in "IN" position.
Open the LEAK MEASUREMENT VALVES and reset any tripped C/B.
The area can be closed after removing all tools and equipment used during this procedure.

Operational Test of the RAT Manual Deployment / Inspection / Test with ACMS

- ✓ Job set-up
- ...
- Procedure
- ✓ Operational Test of the Manual RAT Deployment
- ...
- ✓ Aircraft Maintenance Configuration
- ✓ Installation of the Ground Support Equipment
- ✓ Put the ACMS system in the operation condition
- ✓ Spin-Up and Governing Test with the ACMS
- ✓ Pump Test with the ACMS
- ✓ Anti-Stall Device Test with the ACMS

Inspection

Inspect the RAT and make sure that:
-the RAT warming flow indicator is in "OUT" position,
-the RAT differencial pressure-indicator is in "IN" position,
Check the oil level on the angle gearbox (the oil level is visible at the sight glass). If the oil level is not visible at the sight glass, add oil.

Close-up

...

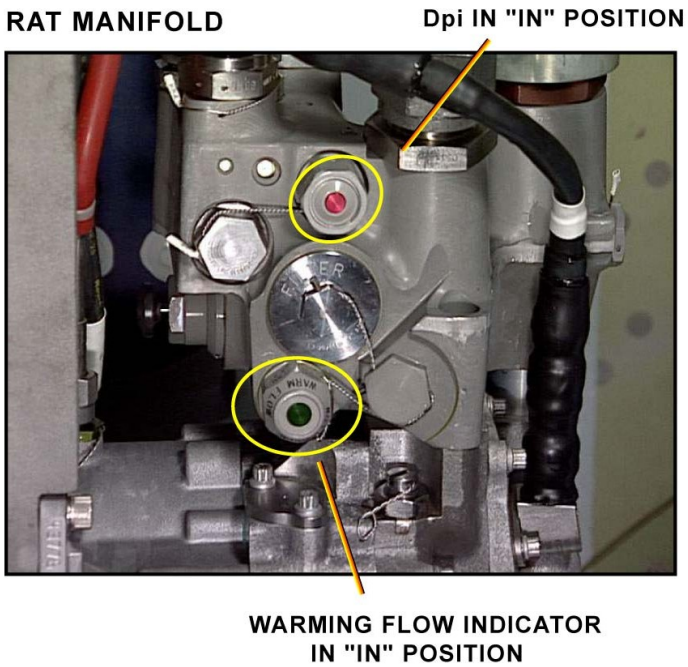

OPERATIONAL TEST OF THE RAT MANUAL DEPLOYMENT / INSPECTION / TEST WITH ACMS - VISUAL INSPECTION AND CLOSE-UP

Operational Test of the RAT Manual Deployment / Inspection / Test with ACMS

- ✓ Job set-up
- ...
- Procedure
- ✓ Operational Test of the Manual RAT Deployment
- ...
- ✓ Aircraft Maintenance Configuration
- ✓ Installation of the Ground Support Equipment
- ✓ Put the ACMS system in the operation condition
- ✓ Spin-Up and Governing Test with the ACMS
- ✓ Pump Test with the ACMS
- ✓ Anti-Stall Device Test with the ACMS
- ✓ Inspection
- Close-up
- ...
- ⇨ On the HYD section of the maintenance panel 285VU, push the LEAK MEASUREMENT VALVES/Y and LEAK MEASUREMENT VALVE G pushbutton switches (the OFF legends of these pushbutton switches go off).
- ...

(285VU)

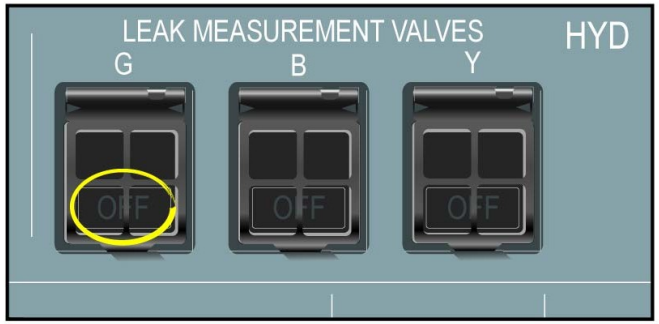

OPERATIONAL TEST OF THE RAT MANUAL DEPLOYMENT / INSPECTION / TEST WITH ACMS - VISUAL INSPECTION AND CLOSE-UP

Operational Test of the RAT Manual Deployment / Inspection / Test with ACMS

- ✓ Job set-up
- ...
- ✓ Procedure
- ✓ Operational Test of the Manual RAT Deployment
- ...
- ✓ Aircraft Maintenance Configuration
- ✓ Installation of the Ground Support Equipment
- ✓ Put the ACMS system in the operation condition
- ✓ Spin-Up and Governing Test with the ACMS
- ✓ Pump Test with the ACMS
- ✓ Anti-Stall Device Test with the ACMS
- ✓ Inspection
- ...
- ✓ Close-up
- ...

TASK COMPLETED

OPERATIONAL TEST OF THE RAT MANUAL DEPLOYMENT / INSPECTION / TEST WITH ACMS - VISUAL INSPECTION AND CLOSE-UP

RAM AIR TURBINE MAN DEPLOYMENT SYS LINE MAINT (2)

OIL REPLENISHMENT OF THE RAT

This procedure helps you to do the RAT servicing.
Place safety barriers and warning notices at the RAT location. Extend the RAT, then trip, safety and tag the RAT STOW CTL C/B located in the avionics compartment to prevent retraction of the RAT.
Remove the oil filling plug and fill in with appropriate oil until it flows out. Fit a new seal onto the plug, then apply the correct torque. Check the oil level on the middle of the sight glass.
Reset RAT STOW CTL C/B. Clear the work area. Retract the RAT.

G7508471 - G3NT1T0 - FM29Y2LINEMCE03

Oil Replenishment of the RAM Air Turbine

Job set-up

...

Extend the RAT.

...

Trip, safety and tag the RAT STOW CTL C/B (1JR).

Procedure

...

Fill the RAT gearboxes.

...

Install the new packing and the oil filling plug.

Make sure the oil level is above the middle of the sight glass.

...

Close-up

...

OIL REPLENISHMENT OF THE RAT

G7508471 - G3NT1T0 - FM29Y2LINEMCE03

Oil Replenishment of the RAM Air Turbine

Job set-up

...

- **Extend the RAT.**

...

- **Trip, safety and tag the RAT STOW CTL C/B (1JR).**

Procedure

...

Fill the RAT gearboxes.

...

Install the new packing and the oil filling plug.

Make sure the oil level is above the middle of the sight glass.

...

Close-up

...

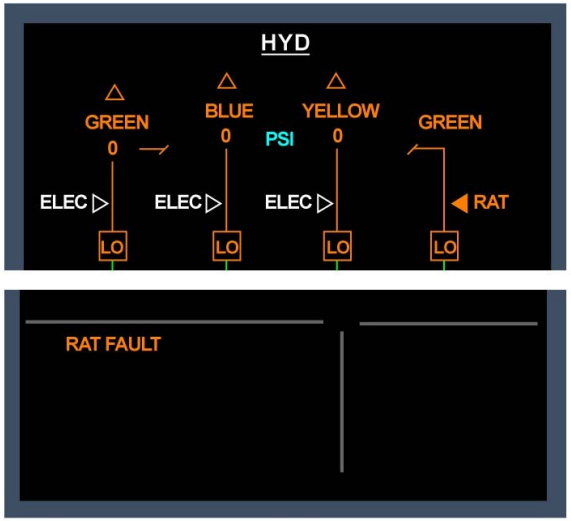

HYDRAULIC PANEL (245VU)

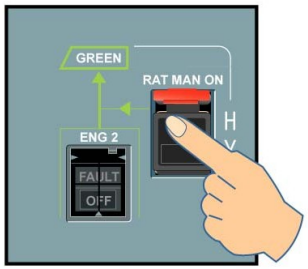

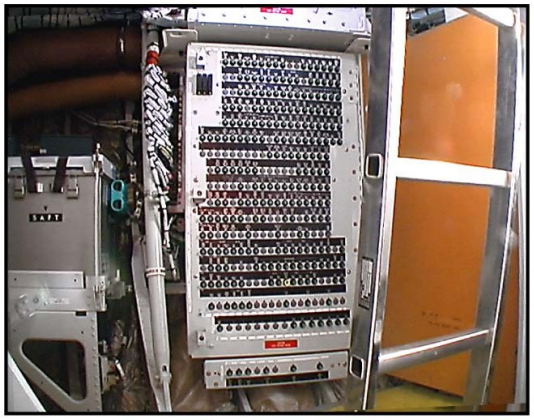

TRIP THE C/B

EXTEND THE RAT

OIL REPLENISHMENT OF THE RAT

Oil Replenishment of the RAM Air Turbine

- ✓ Job set-up
  ...
- ✓ Extend the RAT.
  ...
- ✓ Trip, safety and tag the RAT STOW CTL C/B (1JR).

Procedure
...

- ✓ Fill the RAT gearboxes.
  ...
- ✓ Install the new packing and the oil filling plug.

⇨ **Make sure the oil level is above the middle of the sight glass.**

...
Close-up
...

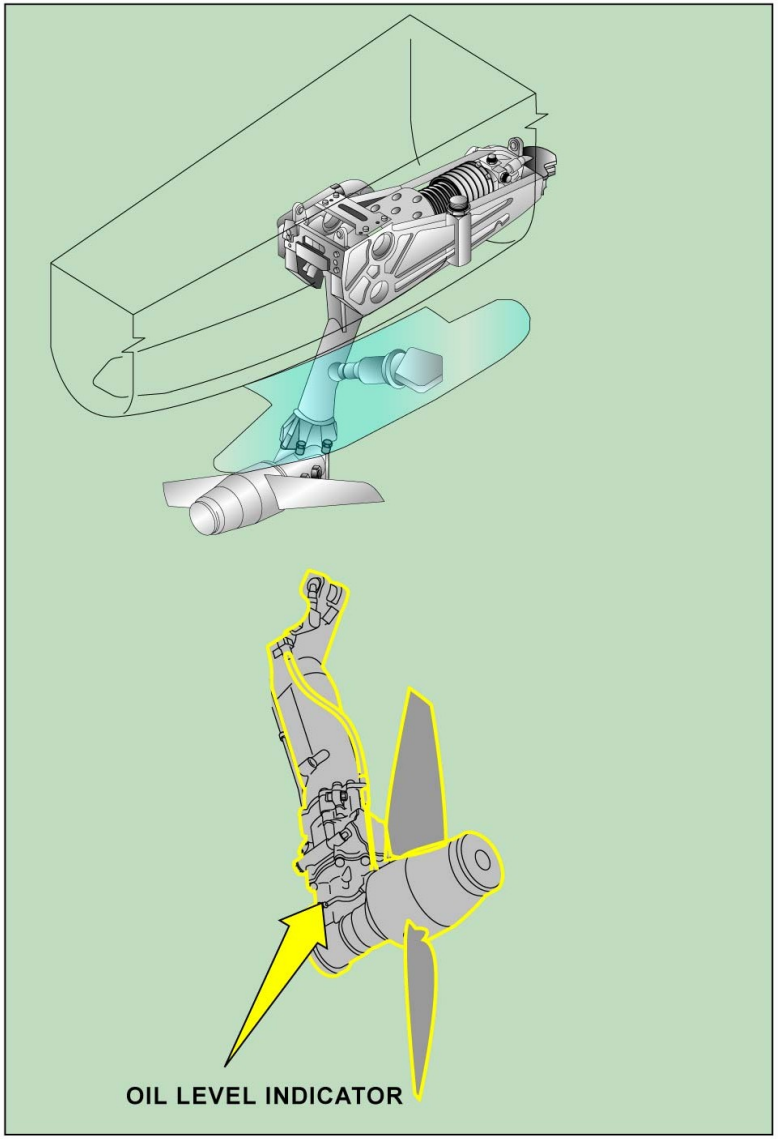

OIL REPLENISHMENT OF THE RAT

Oil Replenishment of the RAM Air Turbine

- ✓ Job set-up
  ...
- ✓ Extend the RAT.
  ...
- ✓ Trip, safety and tag the RAT STOW CTL C/B (1JR).
- ✓ Procedure
  ...
- ✓ Fill the RAT gearboxes.
  ...
- ✓ Install the new packing and the oil filling plug.
- ✓ Make sure the oil level is above the middle of the sight glass.
  ...
- ✓ Close-up
  ...

TASK COMPLETED

OIL REPLENISHMENT OF THE RAT

This Page Intentionally Left Blank

G7508471 - G3NT1T0 - FM29Y2LINEMCE03

AIRBUS S.A.S.
31707 BLAGNAC cedex, FRANCE
STM
REFERENCE G7508471
NOVEMBER 2008
PRINTED IN FRANCE
AIRBUS S.A.S. 2008
ALL RIGHTS RESERVED

AN EADS COMPANY

A330-200/300
TECHNICAL TRAINING MANUAL
MAINTENANCE COURSE - T1 (LVL 2&3) (RR Trent 700)
ICE AND RAIN PROTECTION

This document must be used for training purposes only

Under no circumstances should this document be used as a reference

It will not be updated.

All rights reserved
No part of this manual may be reproduced in any form,
by photostat, microfilm, retrieval system, or any other means,
without the prior written permission of AIRBUS S.A.S.

AIRBUS Environmental Recommendation
Please consider your environmental responsability before printing this document.

ICE AND RAIN PROTECTION

Ice & Rain PROT Line MAINT Brief. (RR700) (2) 2

WING ICE PROTECTION

Wing Ice Protection D/O (3) 38

ENGINE AIR INTAKE ICE PROTECTION

Engine Air Intake Ice Protection D/O (3) 52

PROBE ICE PROTECTION

Probe Ice Protection D/O (3) 66

WINDSHIELD PROTECTION

Windshield A.ICE/Defogging & Rain PROT D/O (3) 70

POTABLE AND WASTE WATER ICE PROTECTION

Potable & Waste Water Ice Protection D/O (3) 80

ESCAPE SLIDE LOCKING MECHANISM ICE PROTECTION

Escape Slide Locking Mech. Ice PROT D/O (3) 84

ICE DETECTION

Ice Detection D/O (3) 94

MAINTENANCE PRACTICE

Ice & Rain Protection System Base Maintenance (3) 100

ICE & RAIN PROT LINE MAINT BRIEF. (RR700) (2)

SYSTEM OVERVIEW

GENERAL

The Ice and Rain Protection System lets the aircraft operate without restriction in icing conditions or heavy rain. Hot air or electrical heating protects critical areas of the aircraft. The different sub systems of the Ice and Rain Protection System are:
- wing ice protection,
- engine air intake ice protection,
- probe ice protection,
- windshield anti-icing, defogging and rain protection,
- potable and waste water ice protection,
- escape slide locking mechanism ice protection,
- ice detection,
- maintenance/test facilities.

When you work on aircraft, you must obey all the safety procedures listed in the AMM.

G7508471 - G3NT1T0 - FM30B100000003

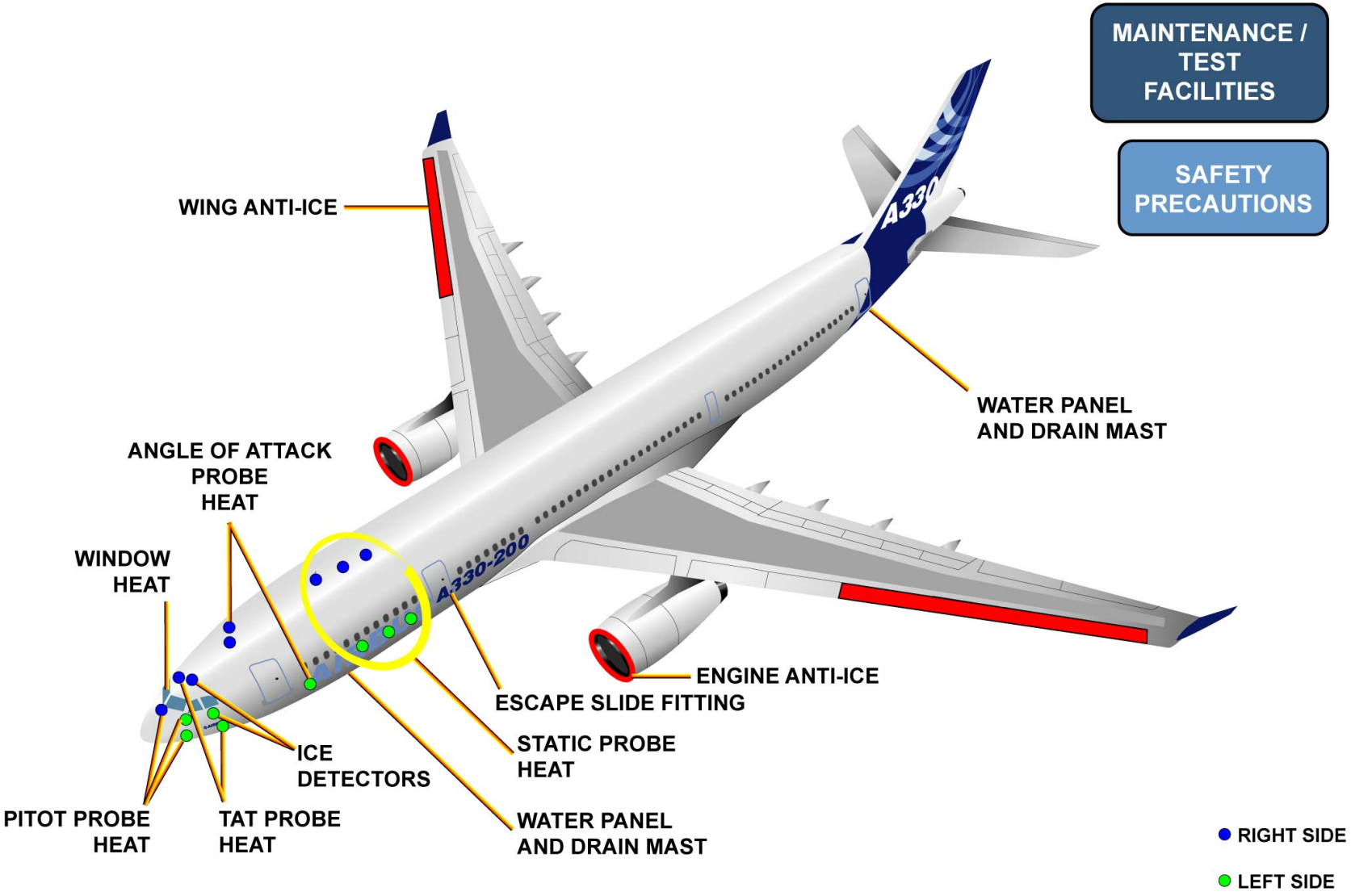

SYSTEM OVERVIEW - GENERAL

G7508471 - G3NT1T0 - FM30B100000003

ICE & RAIN PROT LINE MAINT BRIEF. (RR700) (2)

SYSTEM OVERVIEW (continued)

WING ICE PROTECTION

During icing conditions, hot air is supplied by the pneumatic system to the four outboard slats to raise the temperature. Bleed air is supplied to each wing through two Wing Anti Ice (WAI) valves, one for the slat number four and one for slats number five, six and seven.
If a failure occurs in the wing ice protection system:
- the Zone Controller (ZC) sends the failure data to the Centralized Maintenance Computer (CMC),
- the System Data Acquisition Concentrator (SDAC) sends data to the ECAM.

G7508471 - G3NT1T0 - FM30B100000003

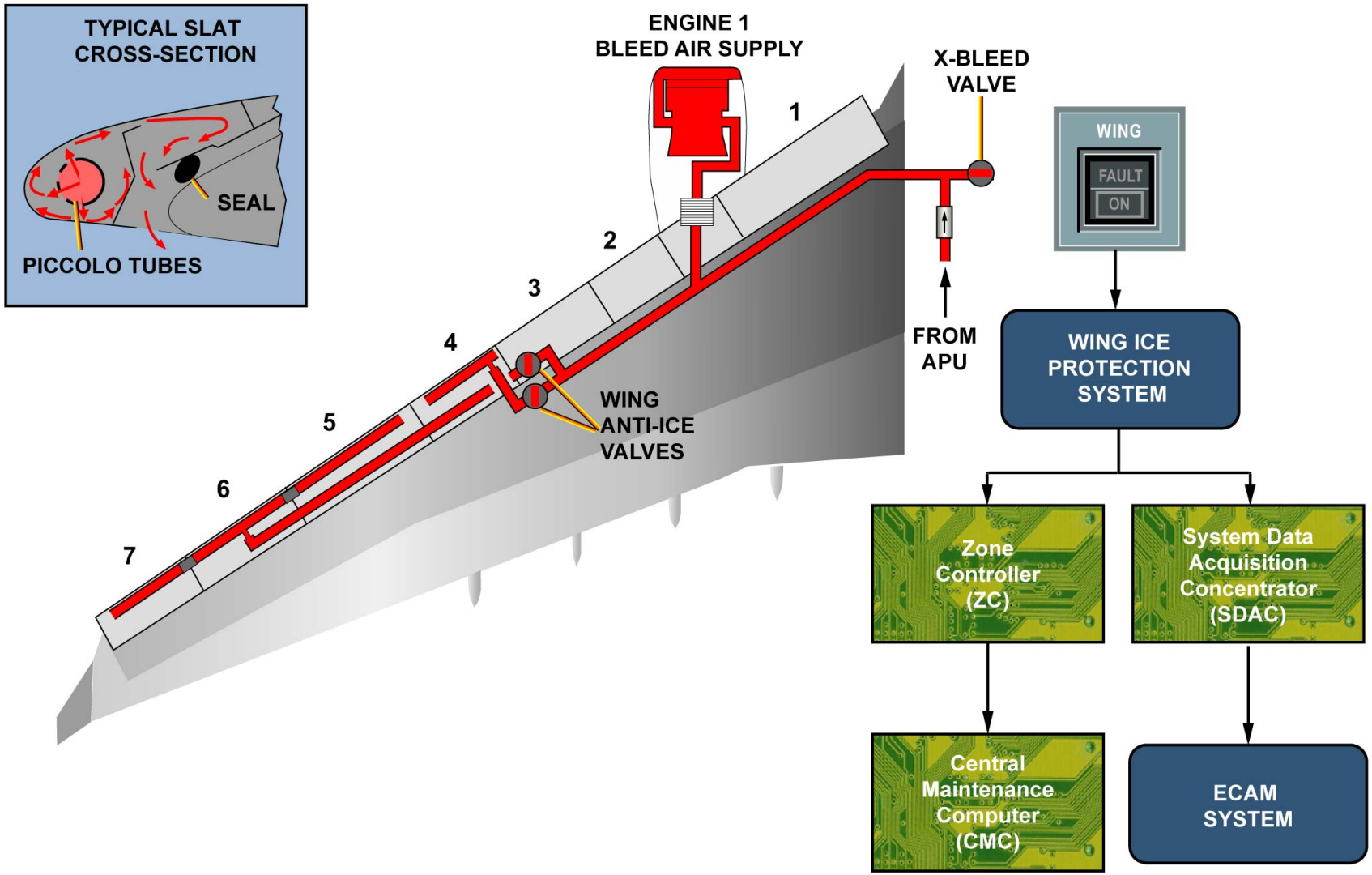

SYSTEM OVERVIEW - WING ICE PROTECTION

G7508471 - G3NT1T0 - FM30B100000003

ICE & RAIN PROT LINE MAINT BRIEF. (RR700) (2)

SYSTEM OVERVIEW (continued)

ENGINE AIR INTAKE ICE PROTECTION

Engine air intake ice protection system ensures safe engine operation in icing or snowy conditions. Hot air bled from HP compressor is used to heat the engine air intake lip in order to prevent ice accretion. Hot air is supplied through an engine air intake anti-ice valve.

The engine air intake ice protection system interfaces with the SDAC for system status display on the ECAM and warning generation. The engine air intake ice protection system also interfaces with the ZC for air bleed demand computation to be sent to the Full Authority Digital Engine Control (FADEC) via the Engine Interface and Vibration Monitoring Unit (EIVMU).

G7508471 - G3NT1T0 - FM30B1000000003

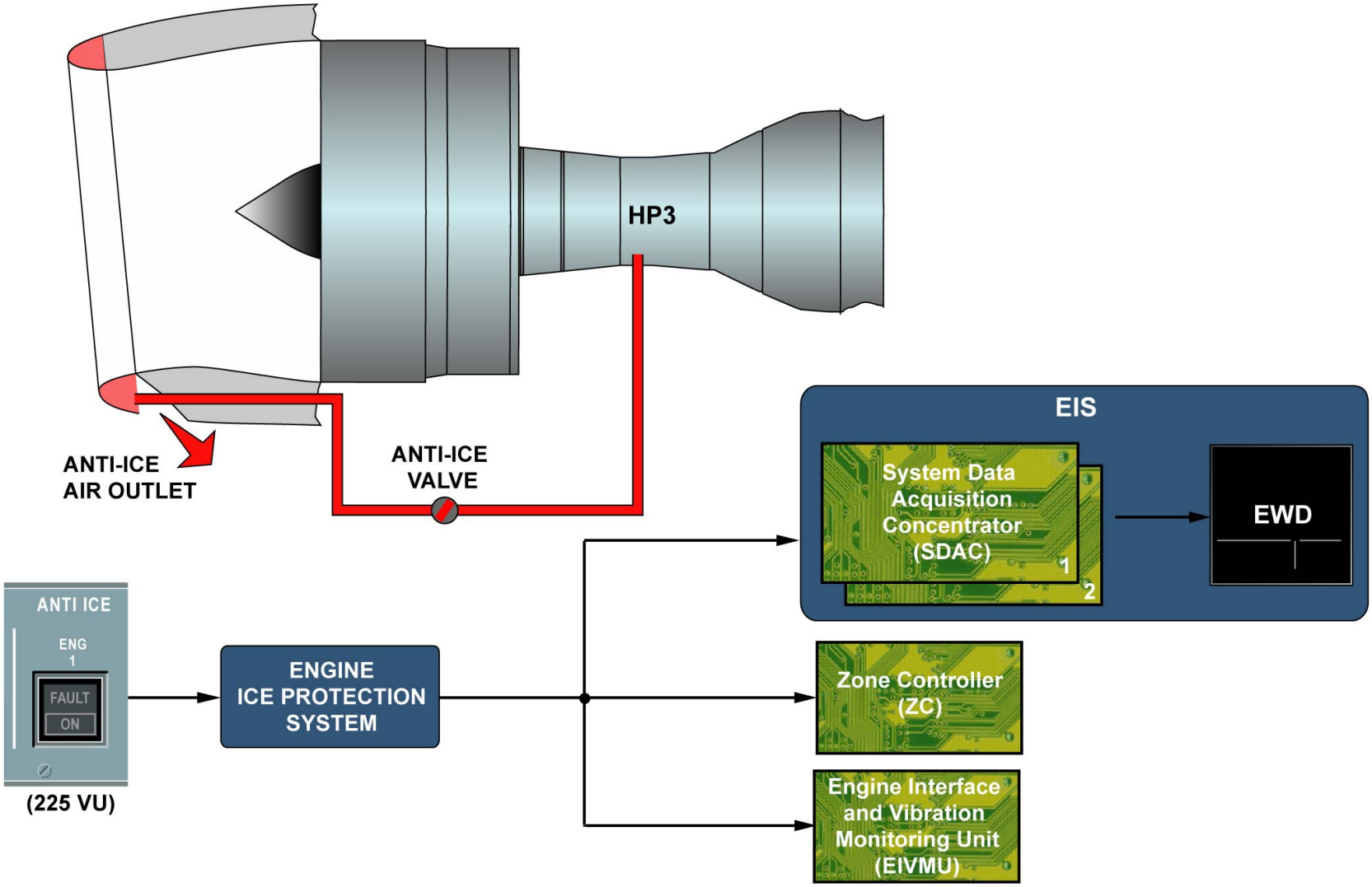

SYSTEM OVERVIEW - ENGINE AIR INTAKE ICE PROTECTION

G7508471 - G3NT1T0 - FM30B100000003

ICE & RAIN PROT LINE MAINT BRIEF. (RR700) (2)

SYSTEM OVERVIEW (continued)

PROBE ICE DETECTION

The static probes, Angle Of Attack (AOA), pitot and Total Air Temperature (TAT) sensors are electrically heated to prevent ice formation. The Captain, the First Officer and standby probe heating systems are independent. Each one has one Probe Heat Computer (PHC), which controls probe and static port heating. The standby system has no TAT probe. The PROBE/WINDOW HEAT P/BSW overrides the automatic operation. On ground, pitot heating is reduced and TAT heating is cut off.

G7508471 - G3NT1T0 - FM30B100000003

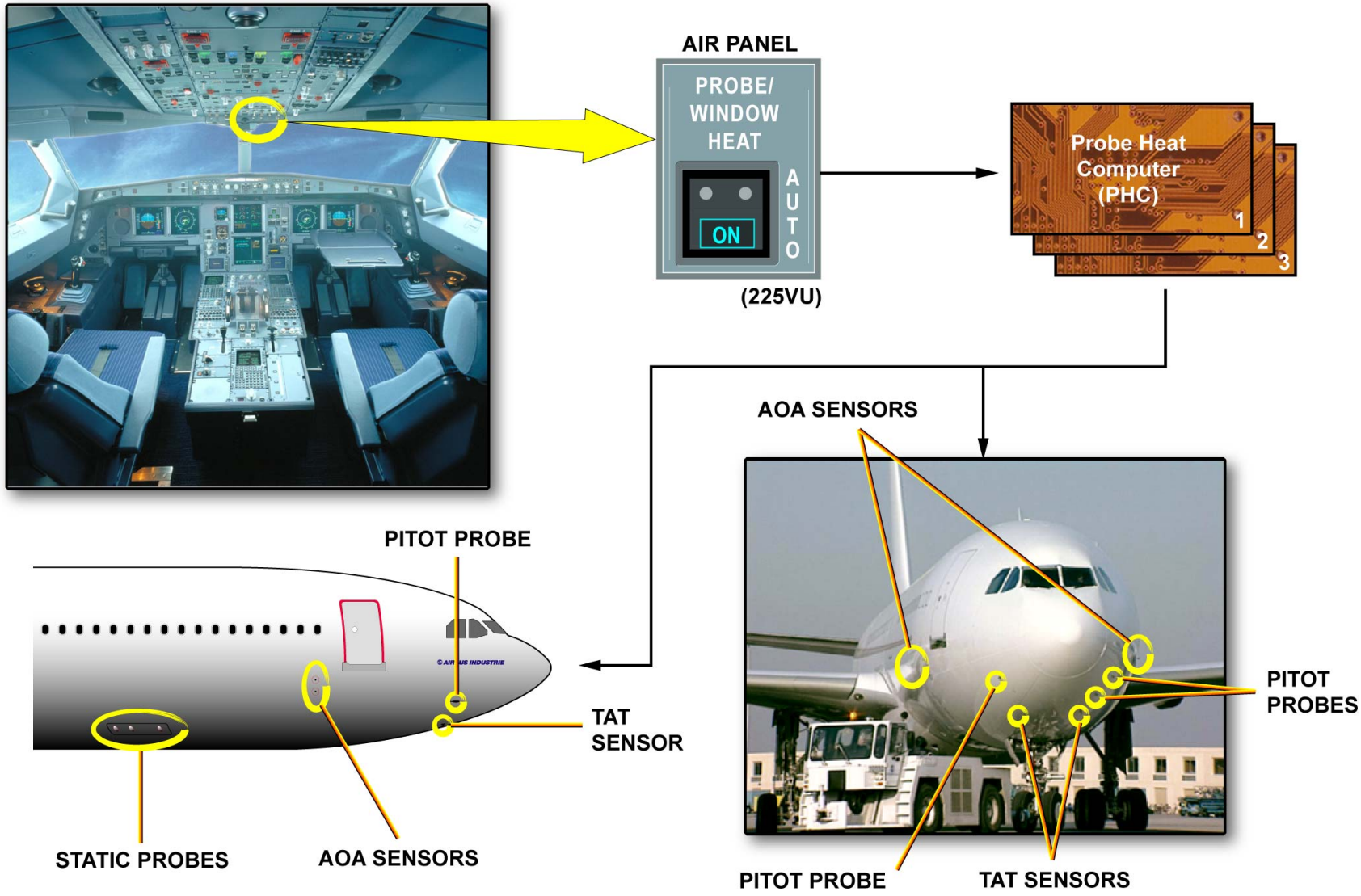

SYSTEM OVERVIEW - PROBE ICE DETECTION

G7508471 - G3NT1T0 - FM30B100000003

ICE & RAIN PROT LINE MAINT BRIEF. (RR700) (2)

SYSTEM OVERVIEW (continued)

WINDSHIELD ANTI-ICING

Windshields and side windows are electrically heated to maintain clear visibility in icing or misting conditions. Windshields are de-iced and side windows are dimisted. The windshield heating operates at low power on ground and at full power in flight. The PROBE/WINDOW HEAT P/BSW overrides the automatic operation. Two fully independent Window Heat Computers (WHCs), one on each side, carry out the heat system monitoring and the overheat protection of their respective windshield and windows.

G7508471 - G3NT1T0 - FM30B100000003

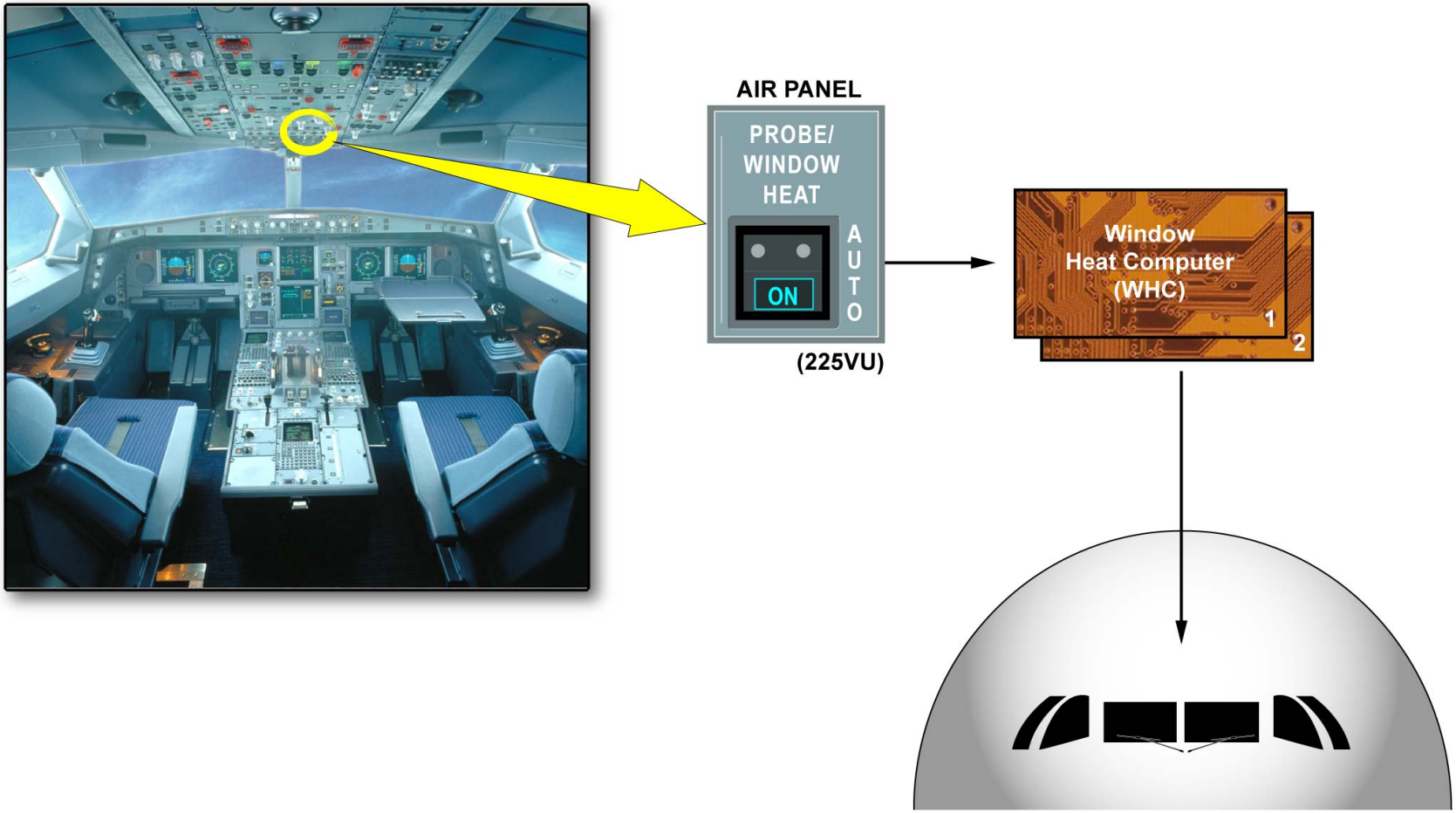

SYSTEM OVERVIEW - WINDSHIELD ANTI-ICING

G7508471 - G3NT1T0 - FM30B1000000003

ICE & RAIN PROT LINE MAINT BRIEF. (RR700) (2)

SYSTEM OVERVIEW (continued)

RAIN PROTECTION

Rain removal from the windshield is done by two independent wipers and in heavy rain, by a rain repellent system. These systems are controlled from the overhead panel. The rain repellent fluid (FORALKYL 2211) is discharged onto the left or right windshield from a pressurized canister installed at the rear of the cockpit. The rain repellent system is inhibited on the ground when the engines are not running.

NOTE: Leakage of FORALKYL 2211 fluid can be detected due to its pine odor.

G7508471 - G3NT1T0 - FM30B100000003

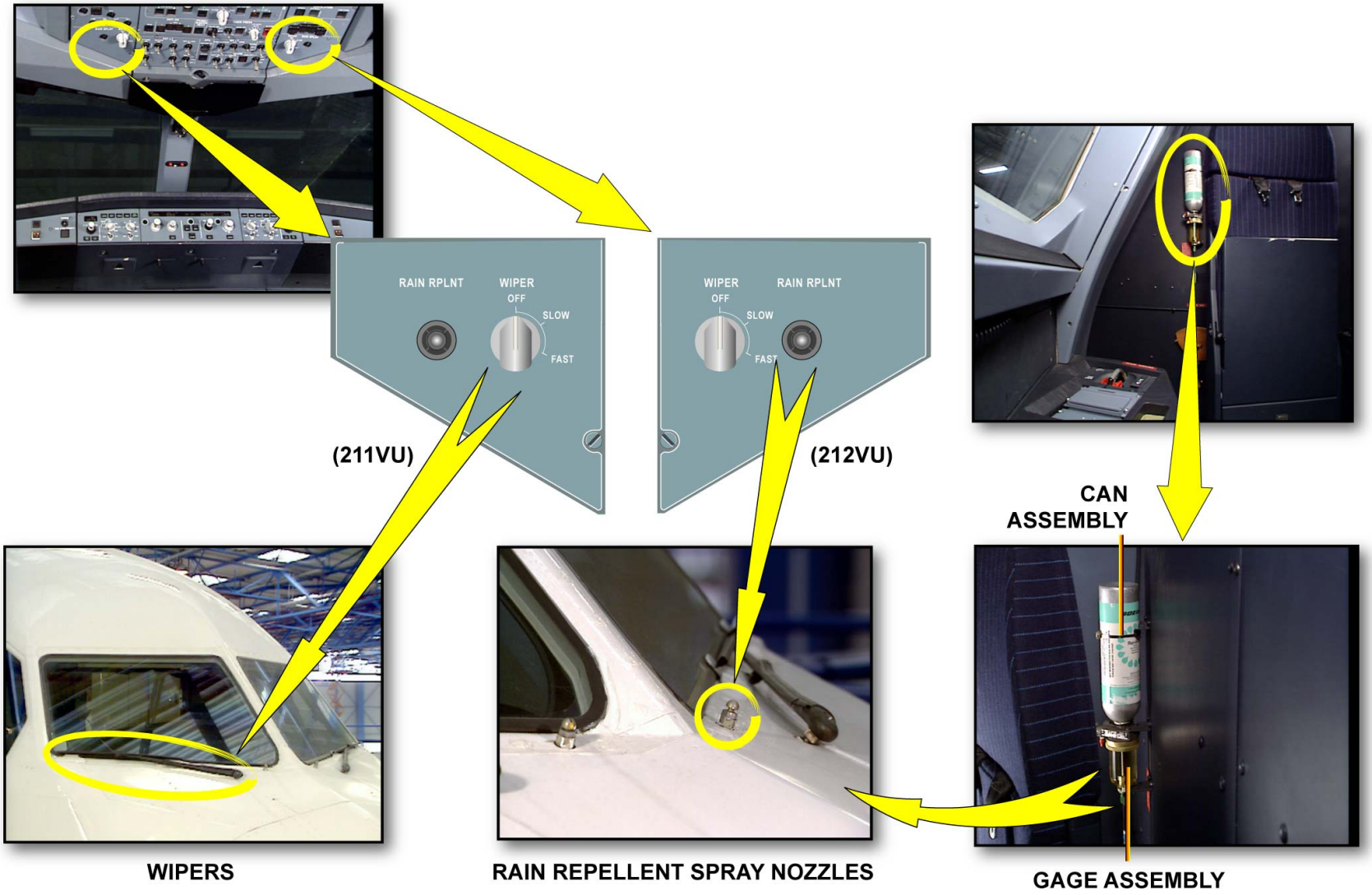

SYSTEM OVERVIEW - RAIN PROTECTION

ICE & RAIN PROT LINE MAINT BRIEF. (RR700) (2)

SYSTEM OVERVIEW (continued)

POTABLE AND WASTE WATER ICE PROTECTION

An automatic water ice protection system is installed to prevent ice formation in flight or on ground at freezing temperature on the following lines:
- the potable water,
- the waste water,
- the water servicing panels,
- the drain masts.

Heating of these water lines is controlled and monitored by two Ice Protection Control Units (IPCUs) based upon information received from temperature sensors installed on these lines. One IPCU controls the lines of the aircraft forward section, the second one the lines of the aft section.

G7508471 - G3NT1T0 - FM30B100000003

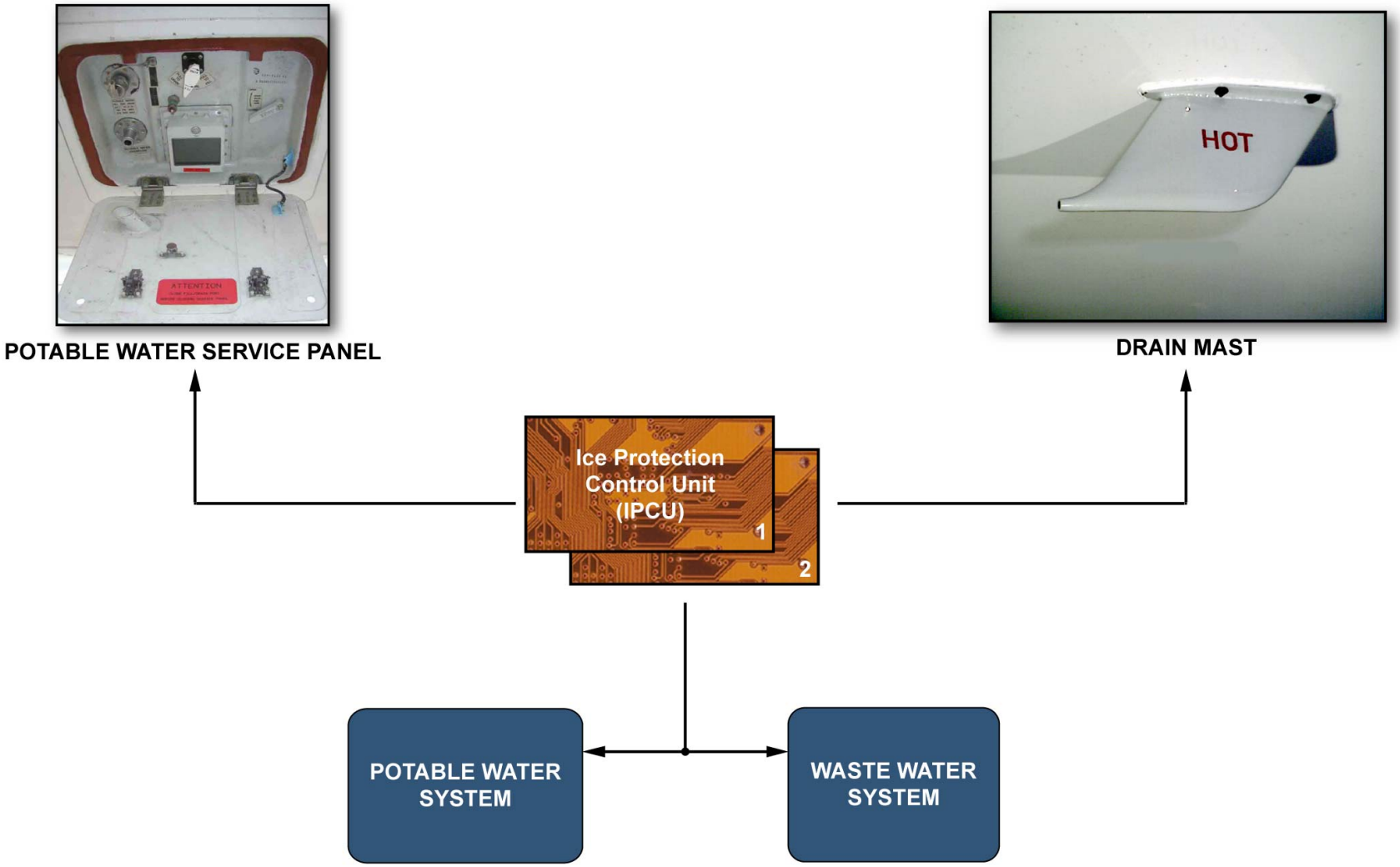

SYSTEM OVERVIEW - POTABLE AND WASTE WATER ICE PROTECTION

ICE & RAIN PROT LINE MAINT BRIEF. (RR700) (2)

SYSTEM OVERVIEW (continued)

ESCAPE SLIDE LOCKING MECHANISM ICE PROTECTION

An electrical ice protection system prevents ice accretion on the Slide Attachment Fittings (SAFs) during flight that could lead to escape slide disarming difficulties on ground at door opening. Each passenger/crew door has two heated SAFs. On the A340-600, the overwing-emergency exits have no heated SAFs. The heating elements located in the related locking plate are powered automatically when icing conditions are detected, if the escape slide is armed. The system is controlled and monitored by two IPCUs, one for doors 1 and 2 (LH and RH) and one for doors 3 and 4 (LH and RH).

G7508471 - G3NT1T0 - FM30B100000003

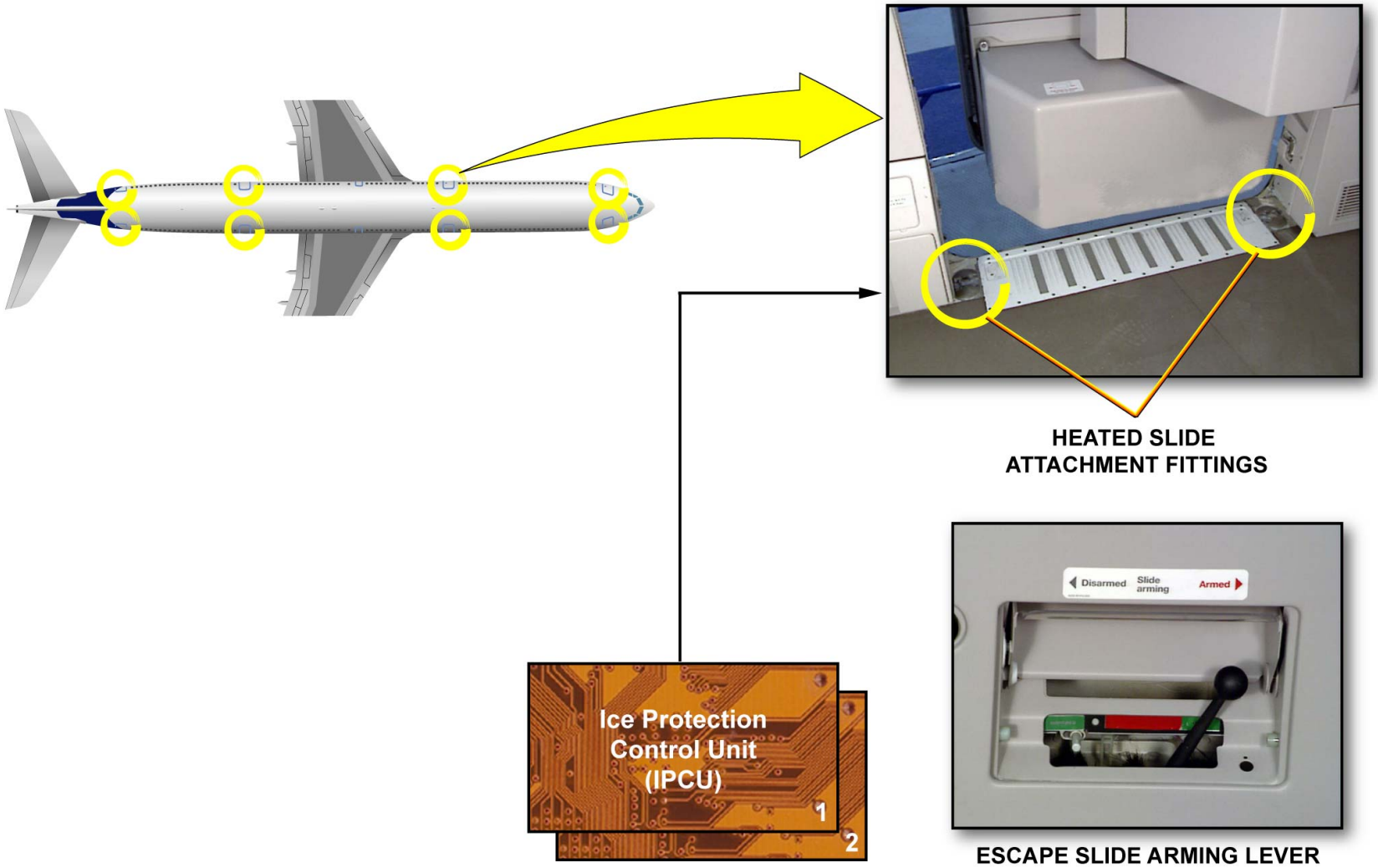

SYSTEM OVERVIEW - ESCAPE SLIDE LOCKING MECHANISM ICE PROTECTION

G7508471 - G3NT1T0 - FM30B100000003

ICE & RAIN PROT LINE MAINT BRIEF. (RR700) (2)

SYSTEM OVERVIEW (continued)

ICE DETECTION

An external visual ice indicator with an integrated light is installed between both windshields to be visible from the CAPT and F/O sides. This indicator light comes on from the ICE INDicator & STandBY COMPASS selector switch on the INTerior LighT panel. In icing conditions, the ice accretion on the indicator prevents the integrated light to be visible from the cockpit.
In addition, a dual advisory ice detection system is installed to give:
- a better detection of icing conditions,
- fuel saving by cutting off the anti-icing systems when the latter is no longer necessary.

The dual advisory ice detection system is made of two ice detectors installed on the skin of the aircraft and directly connected to the FWC to send warning messages to the crew on the EWD. Two levels of detections are given:
- ICE DETECTED used for the selection of engine anti-ice,
- SEVERE ICE DETECTED used for the selection of wing anti-ice.

G7508471 - G3NT1T0 - FM30B100000003

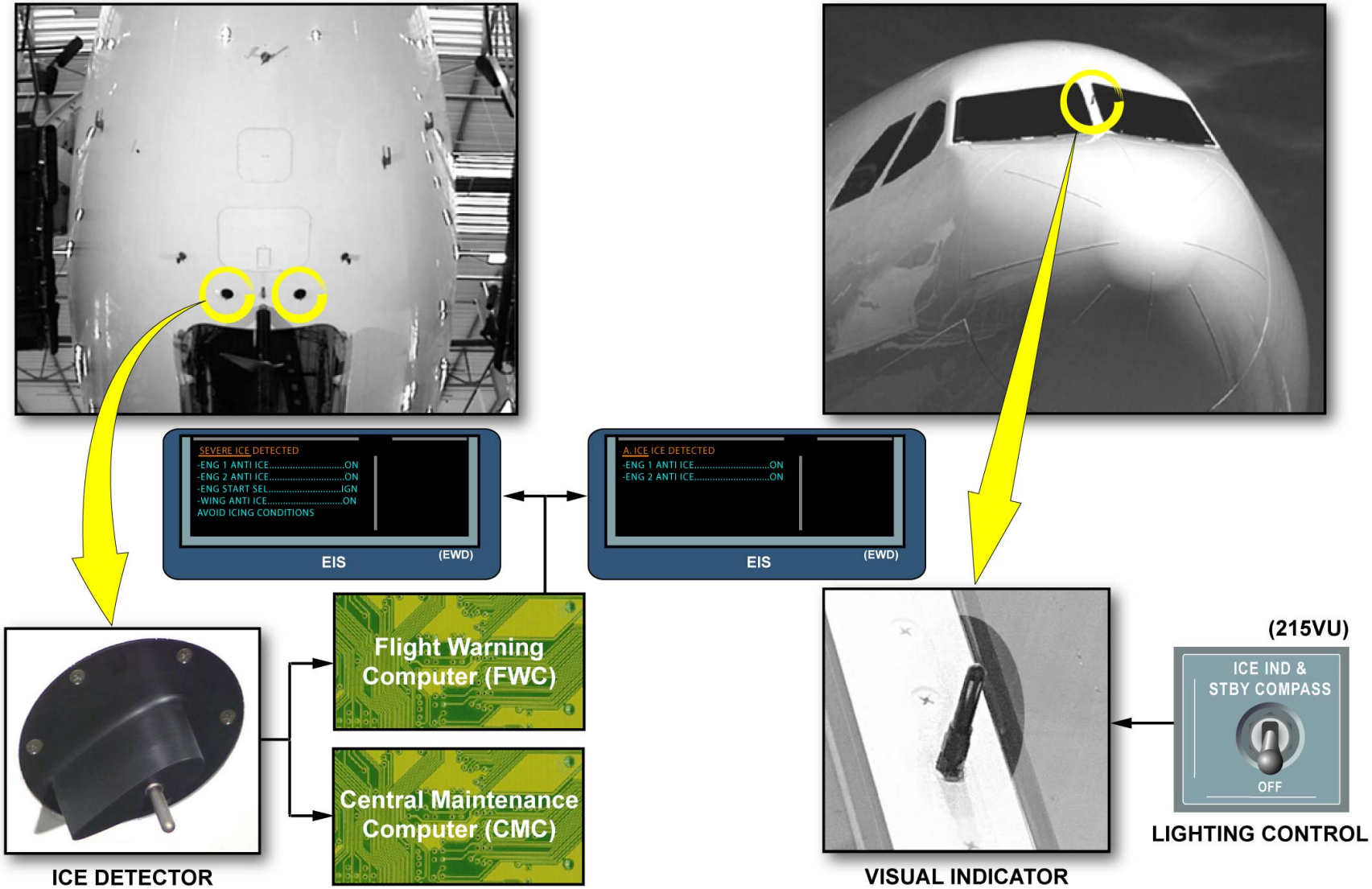

SYSTEM OVERVIEW - ICE DETECTION

G7508471 - G3NT1T0 - FM30B100000003

ICE & RAIN PROT LINE MAINT BRIEF. (RR700) (2)

SERVICING

CHECK OF RAIN-REPELLENT FLUID CAN ASSEMBLY FOR CORRECT FLUID LEVEL AND PRESSURE

This task is accomplished to check that the rain-repellent fluid level and pressure are set correctly. For the pressure gage:
- make sure that the pointer points to the green area,
- if the pointer points to the yellow area, replace the rain-repellent fluid can.

For the fluid level:
- make sure that there is sufficient rain-repellent fluid in the gage assembly,
- if you see the surface of the fluid, replace the rain-repellent fluid can,

If the level and/or pressure is/are not correct, change the rain-repellent fluid can.

NOTE: In case of leakage of the rain repellent fluid, you can smell a pine odor.

G7508471 - G3NT1T0 - FM30B100000003

✓ CHECK OF RAIN-REPELLENT FLUID CAN ASSEMBLY FOR CORRECT FLUID LEVEL AND PRESSURE.

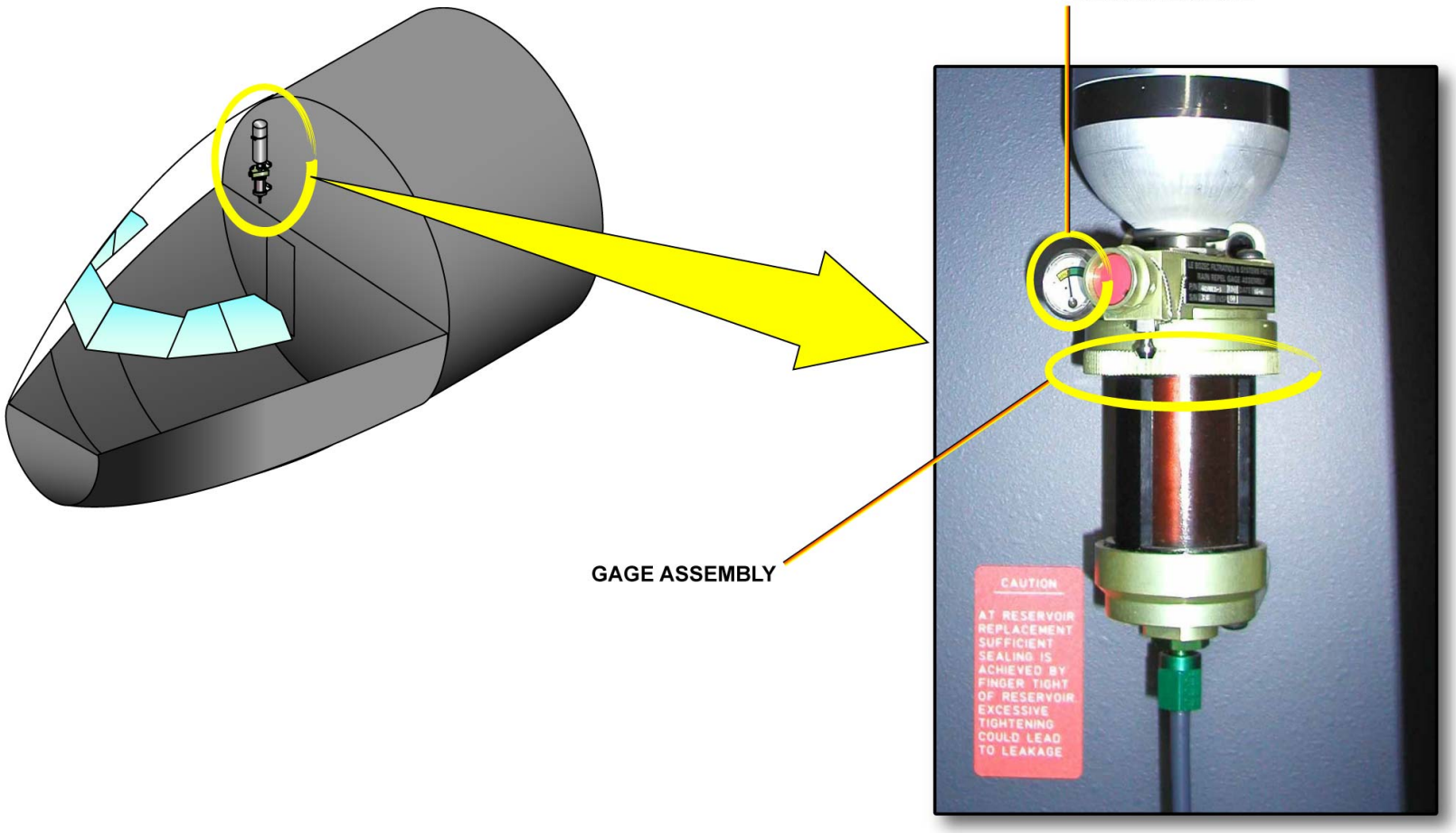

SERVICING - CHECK OF RAIN-REPELLENT FLUID CAN ASSEMBLY FOR CORRECT FLUID LEVEL AND PRESSURE

ICE & RAIN PROT LINE MAINT BRIEF. (RR700) (2)

SERVICING (continued)

FLUID CAN REPLACEMENT PROCEDURE

WARNING: DO NOT GET THE FLUID ON YOUR SKIN OR IN YOUR EYES. IF YOU DO:
- FLUSH IT AWAY WITH CLEAN WATER,
- GET MEDICAL AID.

Cleaning instructions: Make sure that the fluid does not stay on the aircraft furnishing. If the fluid gets on the aircraft furnishings, clean with appropriate cleaning agents. Put a warning notice in the cockpit to tell people not to operate the RAIN RePeLeNT P/BSWs.

WARNING: MAKE SURE THAT YOU DEPRESSURIZE THE RAIN REPELLENT SYSTEM BEFORE YOU REMOVE THE RAIN REPELLENT FLUID CAN. RAIN REPELLENT FLUID CAN COME OUT SUDDENLY IF YOU REMOVE THE FLUID CAN WITH THE SYSTEM PRESSURIZED.

Connect a hose to the drain valve of the rain repellent fluid gage and put the hose outlet in a container. Push the P/B to depressurize the system.
- remove the clamp,
- loosen and remove the fluid can,
- remove and discard the seal,
- put a blanking plug on the disconnected line ends,
- after cleaning the components interfaces, remove the blanking plug and install a new seal,
- put the new rain repellent fluid can and tighten it manually,
- install the clamp on the can and tighten it,
- push the P/B,
- make sure that the fluid level is correct and increases to the correct pressure,
- make sure that there is no leak.
- disconnect the hose from the drain valve and remove the container from the A/C,
- make sure that the work area is clean and clear of tools and items,
- close the access door and remove the warning notice from the cockpit.

✓ FLUID CAN REPLACEMENT PROCEDURE

WARNING

DO NOT GET THE FLUID ON YOUR SKIN OR IN YOUR EYES. IF YOU DO:
- FLUSH IT AWAY WITH CLEAN WATER
- GET MEDICAL AID

CLEANING INSTRUCTIONS: Make sure that the fluid does not stay on aircraft furnishing. If the fluid gets on the aircraft furnishings, clean with appropriate cleaning agent.

SERVICING - FLUID CAN REPLACEMENT PROCEDURE

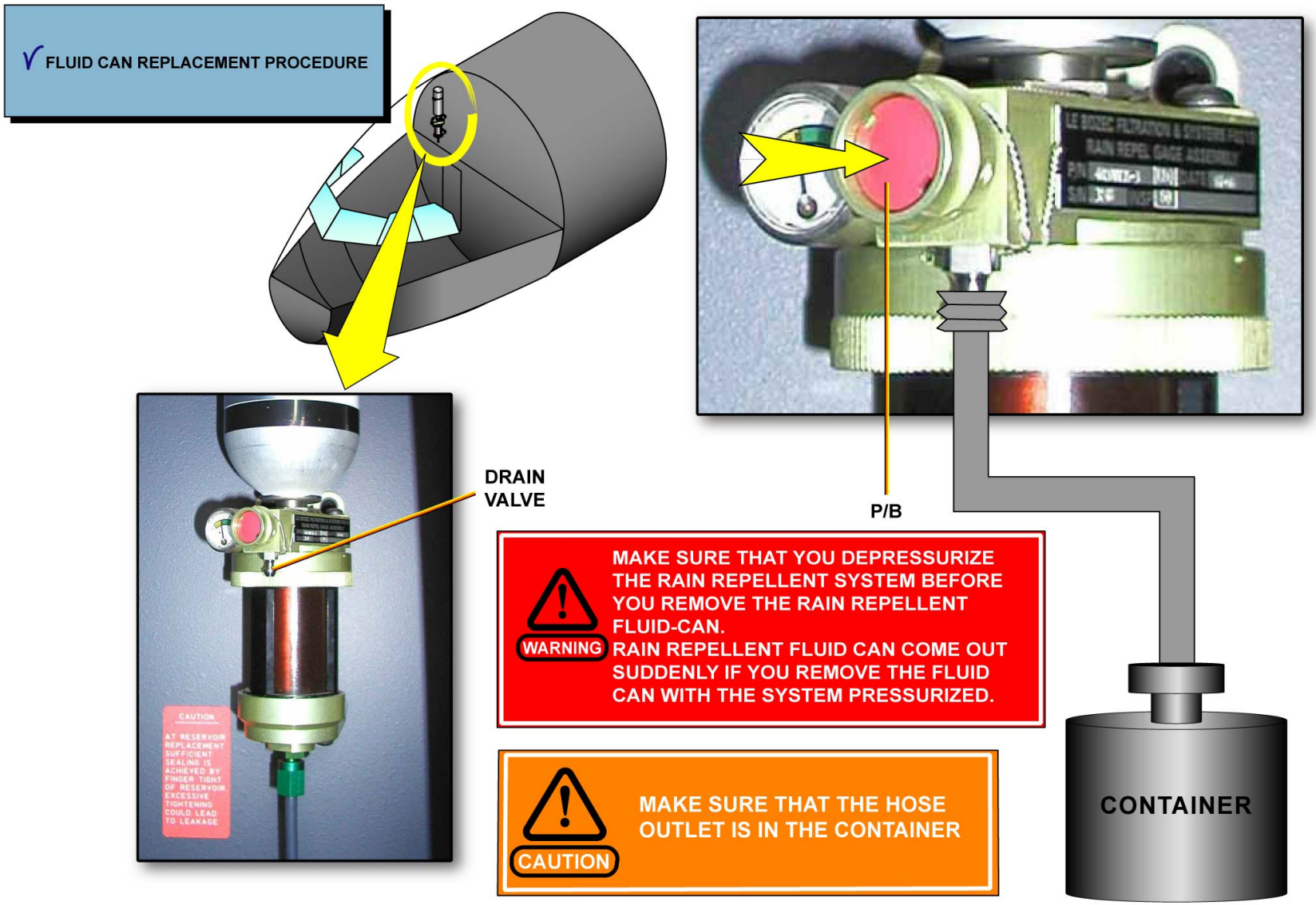

SERVICING - FLUID CAN REPLACEMENT PROCEDURE

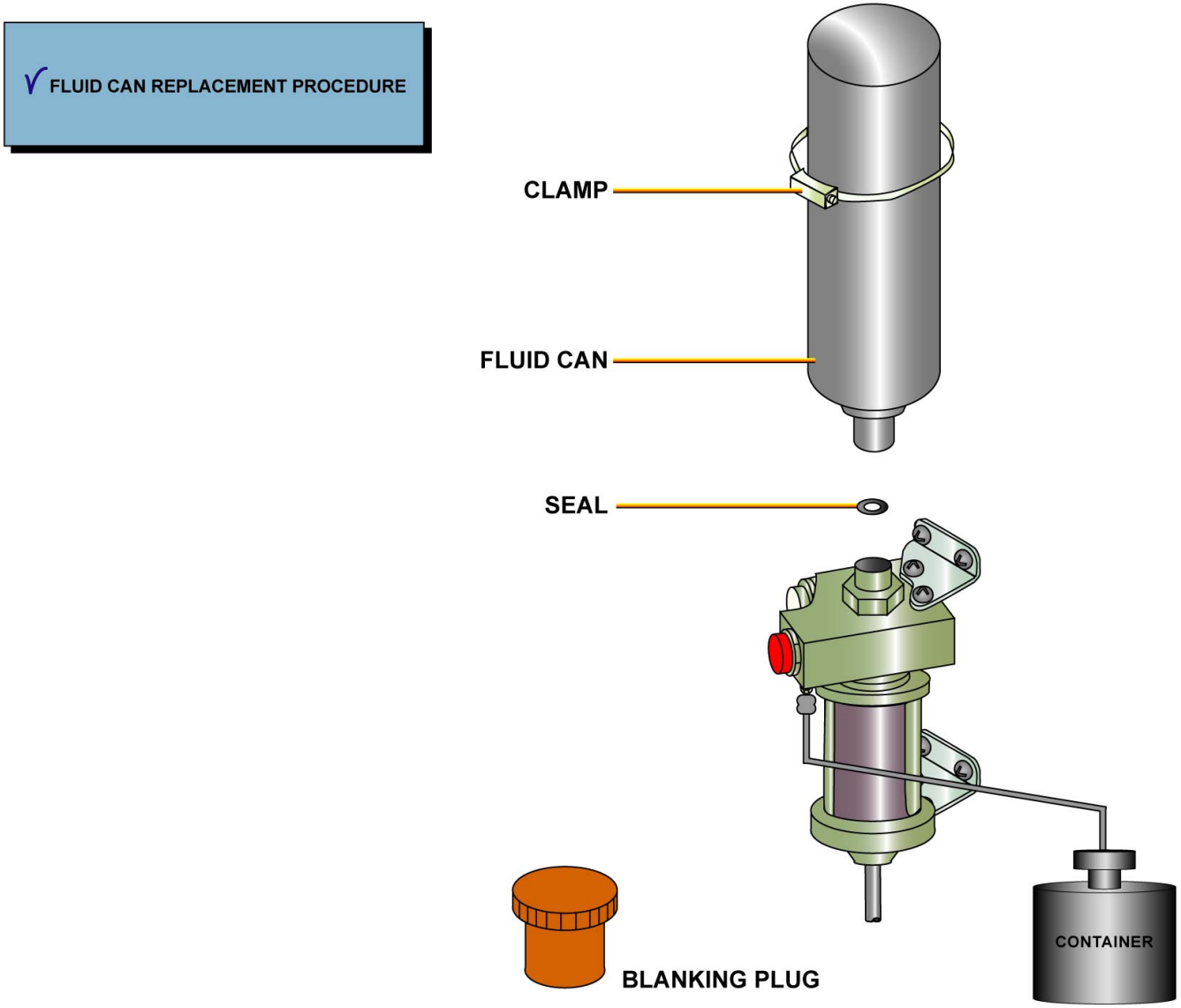

SERVICING - FLUID CAN REPLACEMENT PROCEDURE

G7508471 - G3NT1T0 - FM30B100000003

✓ FLUID CAN REPLACEMENT PROCEDURE

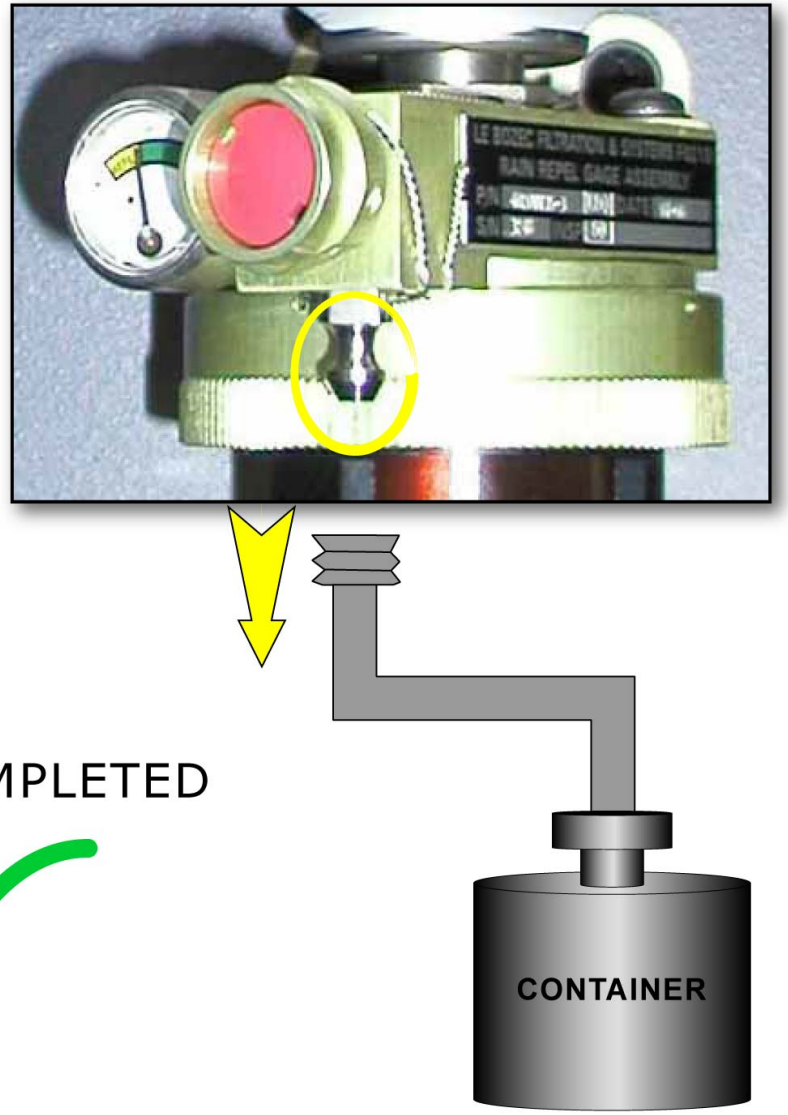

TASK COMPLETED

SERVICING - FLUID CAN REPLACEMENT PROCEDURE

This Page Intentionally Left Blank

G7508471 - G3NT1T0 - FM30B100000003

ICE & RAIN PROT LINE MAINT BRIEF. (RR700) (2)

MEL/DEACTIVATION

DEACTIVATION OF THE WING ANTI-ICE CONTROL VALVE IN THE CLOSED LOCKED POSITION

The A/C Minimum Equipment List (MEL) allows dispatch with one or both Wing Anti-Ice (WAI) valves in the locked closed position if the A/C is not operated in icing conditions. This deactivation procedure is as follows:
- check that the pneumatic system is not pressurized, the engines and the APU are shut down,
- use the slat/flap control lever-locking tool to lock the slat/flap control lever in position,
- open, safety and tag the related Circuit Breakers (C/Bs).

Put "warning notices" in these positions before you do work on the ice protection system:
- on the ground-power connections for high-pressure air, to tell persons not to pressurize the pneumatic system,
- on panel 125VU, on the centre pedestal, to tell persons not to operate the engines,
- on panel 215VU, on the overhead panel, to tell persons not to operate the APU,
- on panel 225VU, on the overhead panel, to tell persons not to pressurize the bleed air system,
- on panel 114VU, on the center pedestal, to tell persons not to operate the slats.

WARNING: DO NOT TOUCH THE ANTI-ICE DUCTS UNTIL THEY ARE COOL. THE DUCTS STAY HOT FOR SOME TIME AFTER THE ENGINE STOPS AND CAN BURN YOU. WEAR GOOGLES WHEN YOU REMOVE OR INSTALL LOCKWIRE. CUT, REMOVE AND DISCARD THE LOCKWIRE AS YOU DO THE TASK. LOOSE LOCKWIRE CAN CUT OR BLIND YOU.

To gain access to the valves:
- remove the applicable access panel.

The wing anti-ice valves are identical but the locking procedure is different due to the valve installation position. A lock screw locks the wing valve below. A locking clip locks the wing valve above. For the wing anti-ice valve above, an inspection mirror is necessary.
To deactivate the wing anti-ice control valve below:
- remove and discard the lockwire from the locking screw,
- move the indicator to the closed position,
- remove the locking screw from the stowage position,
- install the locking screw through the locking hole in the indicator,
- lockwire the locking screw in position.

For the wing anti-ice valve above, the procedure is different:
- check that the indicator is in the closed position,
- if not, slowly move the shaft with your hand to the required position,
- move the locking clip across until you feel the lock engages,
- if possible, slightly adjust the position of the shaft to get a movement of the locking clip.

NOTE: The unlocked position of the locking clip is in the middle-free position. It can be moved in either direction to lock the valve.

- remove the locking tool slat/flap control lever,
- remove the safety clip(s) and the tag(s) and close the related C/Bs,
- check that tools used during this procedure are removed,
- install the applicable access panel,

NOTE: - make an entry in the A/C technical logbook after the WAI control valve has been deactivated in the closed locked position.

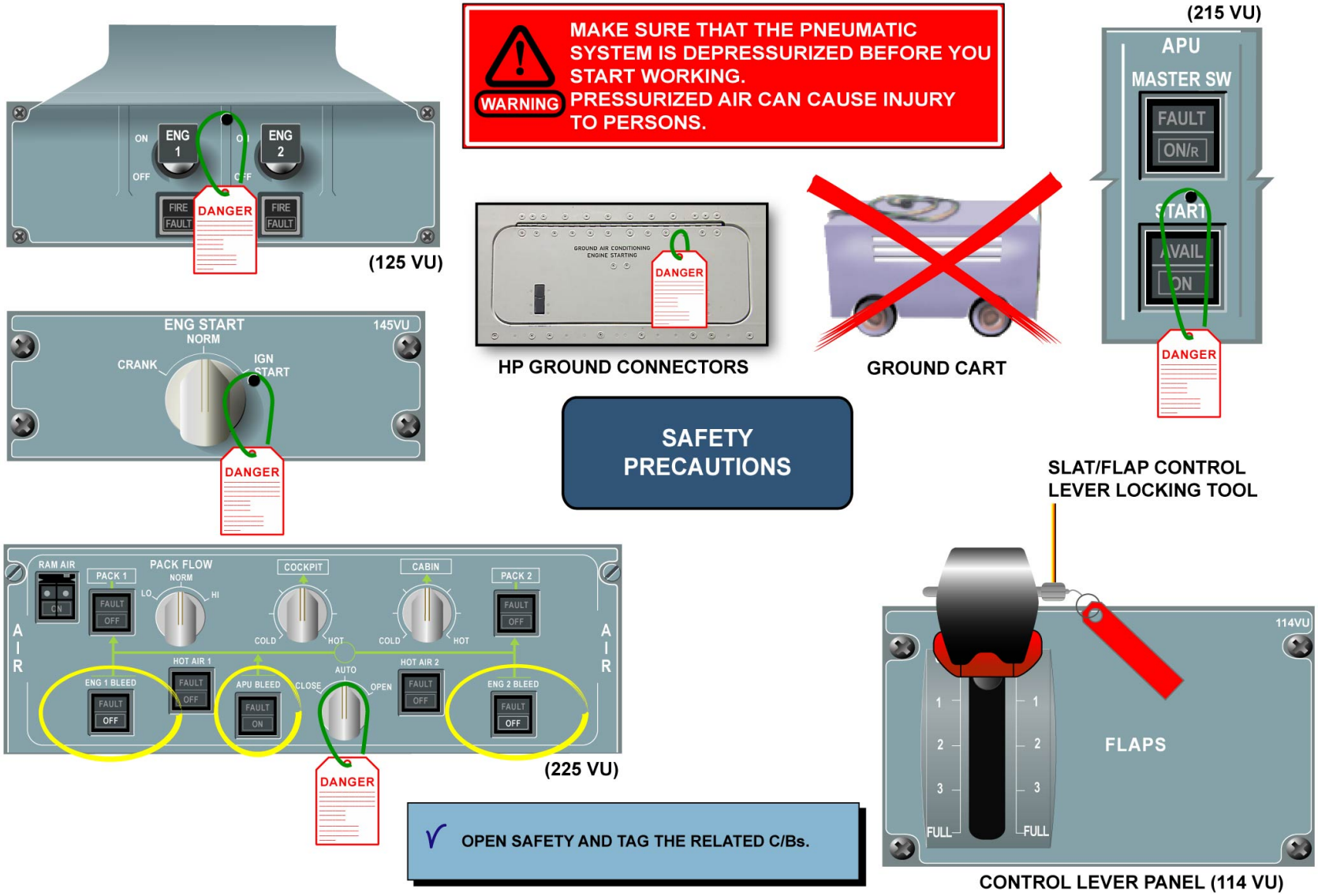

MEL/DEACTIVATION - DEACTIVATION OF THE WING ANTI-ICE CONTROL VALVE IN THE CLOSED LOCKED POSITION

G7508471 - G3NT1T0 - FM30B100000003

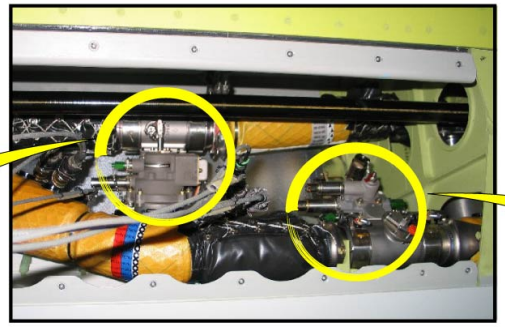

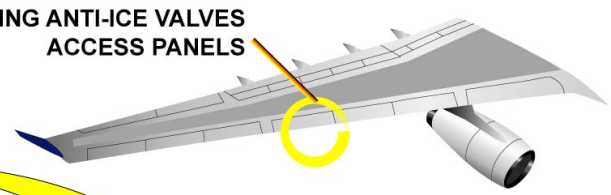

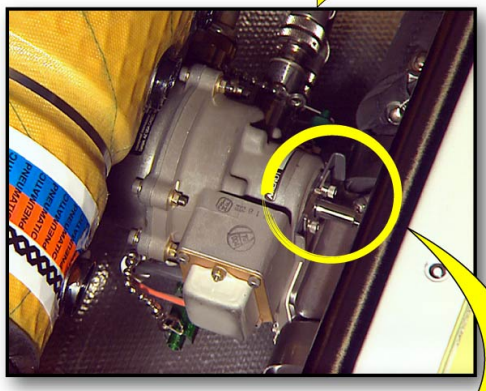

WARNING

DO NOT TOUCH THE ANTI-ICE DUCTS UNTIL THEY ARE COOL. THE DUCTS STAY HOT FOR A LONG TIME AFTER THE ENGINE STOPS AND CAN BURN YOU.

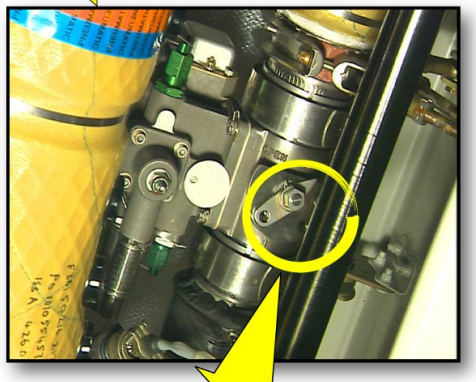

WARNING

WEAR GOGGLES WHEN YOU REMOVE OR INSTALL LOCKWIRE.
CUT, REMOVE AND DISCARD THE LOCKIRE AS YOU DO THE TASK.
LOOSE LOCKWIRE CAN CUT OR BLIND YOU.

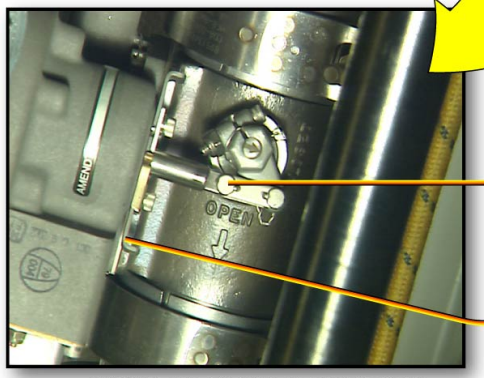

VALVE IN CLOSED POSITION

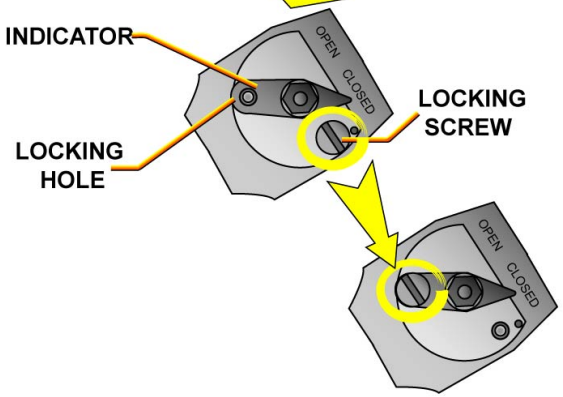

MEL/DEACTIVATION - DEACTIVATION OF THE WING ANTI-ICE CONTROL VALVE IN THE CLOSED LOCKED POSITION

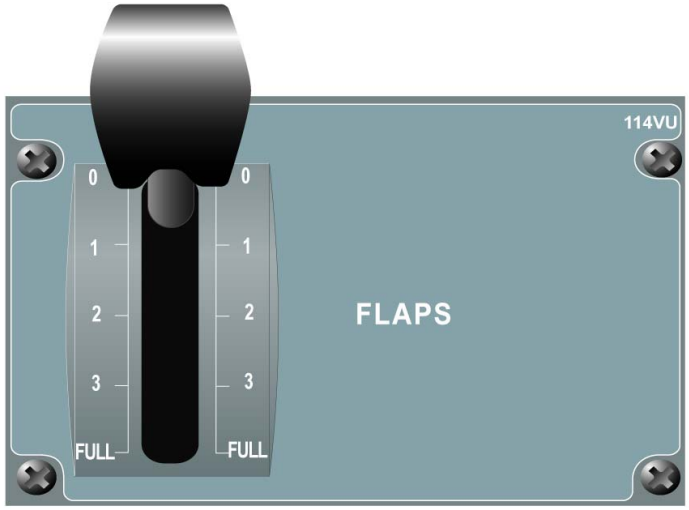

CONTROL LEVER PANEL (114 VU)

TASK COMPLETED

MEL/DEACTIVATION - DEACTIVATION OF THE WING ANTI-ICE CONTROL VALVE IN THE CLOSED LOCKED POSITION

ICE & RAIN PROT LINE MAINT BRIEF. (RR700) (2)

MEL/DEACTIVATION (continued)

DEACTIVATION OF THE ENG AIR-INTAKE A-ICE CTRL VALVE IN THE CLOSED LOCKED POSITION

The A/C MEL is used to dispatch with one engine-air-intake anti-ice valve locked in the closed position if the A/C is not operated in icing conditions. It is also used for dispatch with one or more valves locked in the open position if flight performance penalties are applied. The deactivation procedure is as follows:

WARNING: BE CAREFUL WHEN YOU WORK ON THE ENGINE COMPONENTS IMMEDIATELY AFTER THE ENGINE IS SHUTDOWN. THE ENGINE COMPONENTS CAN STAY HOT FOR UP TO ONE HOUR. WAIT FIVE MINUTES AFTER ENGINES SHUTDOWN BEFORE DOING THIS PROCEDURE. YOU MUST NOT TOUCH HOT PARTS WITHOUT APPLICABLE GLOVES. HOT PARTS CAN CAUSE AN INJURY. IF YOU GET AN INJURY PUT IT IN COLD WATER FOR TEN MINUTES AND GET MEDICAL AID.

- Open, safety and tag the related circuit breakers.

Make sure that the engines shutdown occurred at least five minutes before you do this procedure:
- open the left fan cool door to gain access to the engine air-intake anti-ice valve,
- lock the anti-ice valve in the open or closed position,

NOTE: The arrow on the turret shows the relation of the butterfly valve to the valve body.

- remove the lockwire from the turret hole,
- remove the lock screw from the storage hole,
- use an applicable wrench on the turret and move the butterfly valve to the necessary position in the valve body (open or closed),
- hold the valve in the necessary position and install the lock screw through the boss cover and the turret,
- secure the turret with lockwire,
- make sure that the ANTI-ICE ENG 1(2) P/BSW is pushed (ON legend comes on),

NOTE: This test is required only in case the valve is deactivated in the OPEN position.

remove the safety clip(s) and the tag(s) and close the related C/Bs,
- check that tools used during this procedure are removed,
- close the left fan cowl door
- make an entry in the A/C technical logbook that the engine air-intake anti-ice valve has been deactivated locked in the closed position,
- put a warning notice in the cockpit to tell persons which anti-ice valve is locked in the closed position,
- de-energize the A/C electrical circuits

G7508471 - G3NT1T0 - FM30B100000003

SAFETY PRECAUTIONS

✓ OPEN SAFETY AND TAG THE RELATED C/Bs.

WARNING

BE CAREFUL WHEN YOU WORK ON THE ENGINE COMPONENTS IMMEDIATELY AFTER THE ENGINE IS SHUTDOWN.
THE ENGINE COMPONENTS CAN STAY HOT FOR UP TO ONE HOUR.

WARNING

YOU MUST NOT TOUCH HOT PARTS WITHOUT APPLICABLE GLOVES.
HOT PARTS CAN CAUSE AN INJURY.
IF YOU GET AN INJURY PUT IN COLD WATER FOR TEN MINUTES AND GET MEDICAL AID.

WARNING

WAIT 5 MINUTES AFTER ENGINES SHUTDOWN BEFORE DOING THIS PROCEDURE.

MEL/DEACTIVATION - DEACTIVATION OF THE ENG AIR-INTAKE A-ICE CTRL VALVE IN THE CLOSED LOCKED POSITION

G7508471 - G3NT1T0 - FM30B100000003

1- OPEN THE RIGHT FAN COWL DOOR.

2- DEACTIVATE THE ANTI-ICE VALVE

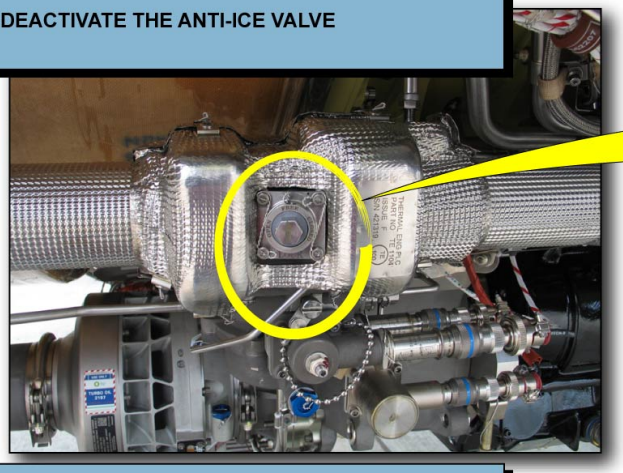

MANUAL
OVERRIDE

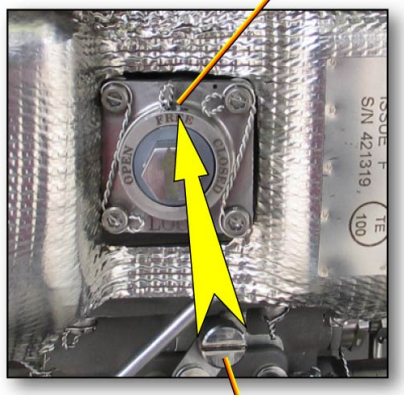

3- ON ENGINE ANTI-ICE PANEL, THE ON LEGEND IS ON FOR VALVE OPEN.

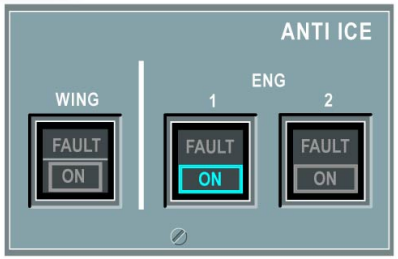

(225 VU)

MEL/DEACTIVATION - DEACTIVATION OF THE ENG AIR-INTAKE A-ICE CTRL VALVE IN THE CLOSED LOCKED POSITION

G7508471 - G3NT1T0 - FM30B100000003

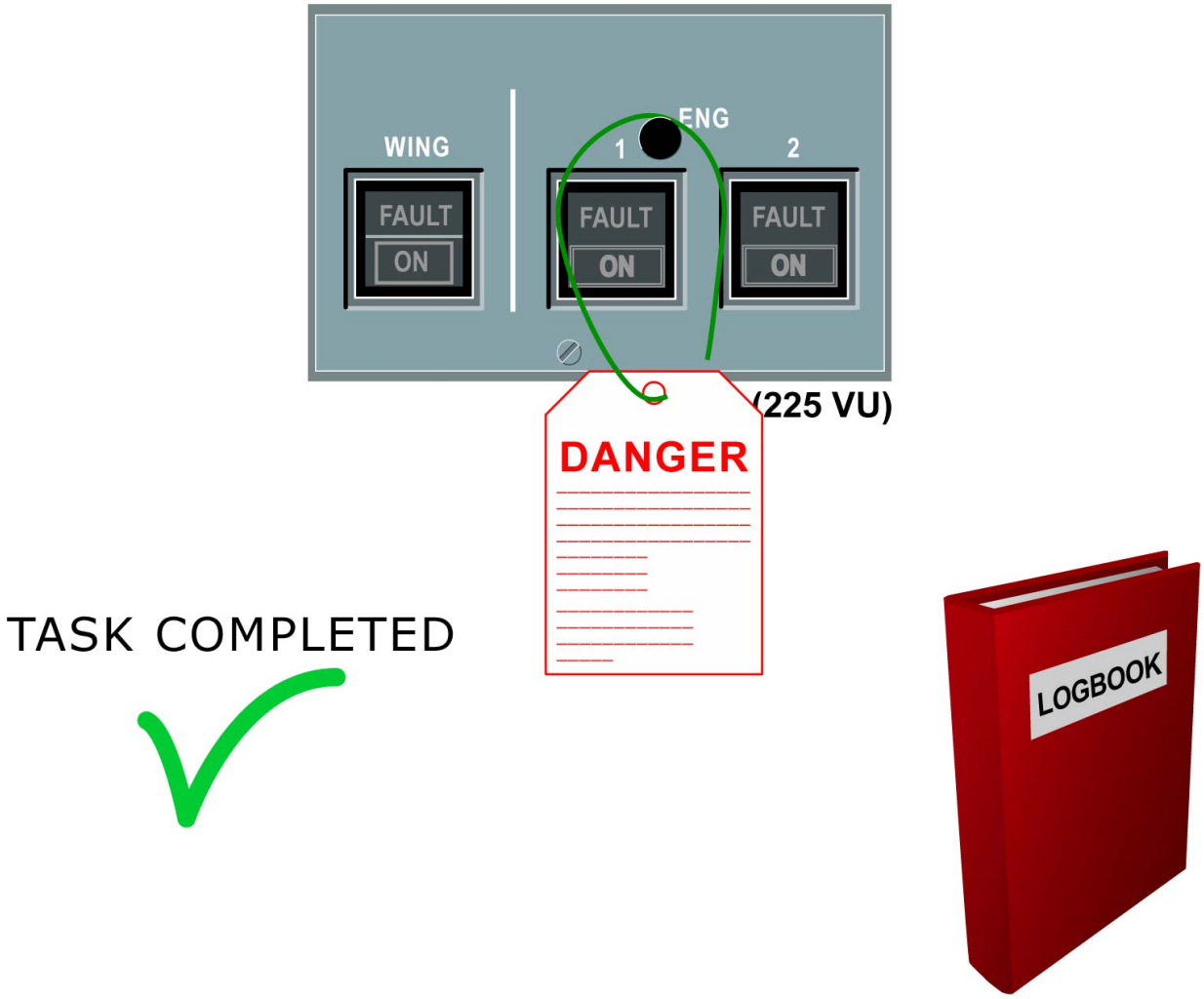

MEL/DEACTIVATION - DEACTIVATION OF THE ENG AIR-INTAKE A-ICE CTRL VALVE IN THE CLOSED LOCKED POSITION

ICE & RAIN PROT LINE MAINT BRIEF. (RR700) (2)

MAINTENANCE TIPS-PROBE HEAT SYSTEM

When the aircraft is parked, it is recommended to install protective covers on the air data probes (static ports, pitot probes, AOA sensors and TAT sensors). The protective covers help to protect the probes from contamination. The covers should be marked with REMOVE BEFORE FLIGHT. Ground personnel must make sure that the covers are removed before flight or before the power is applied to the probes (engine start or ground test). The probe heat system operates automatically to power the air data probe heaters when at least one inboard engine is running. It is also designed to operate automatically when the aircraft is in flight. During troubleshooting and ground operations, do not pull the PHC or EIVMU or Landing Gear Control and Interface Unit (LGCIU) power supply C/Bs before pulling the entire probe heat C/Bs are pulled (Static supply (28VDC), AOA supply, pitot supply and TAT supply (all 115VAC)) otherwise the related probes and static ports will be heated.

G7508471 - G3NT1T0 - FM30B100000003

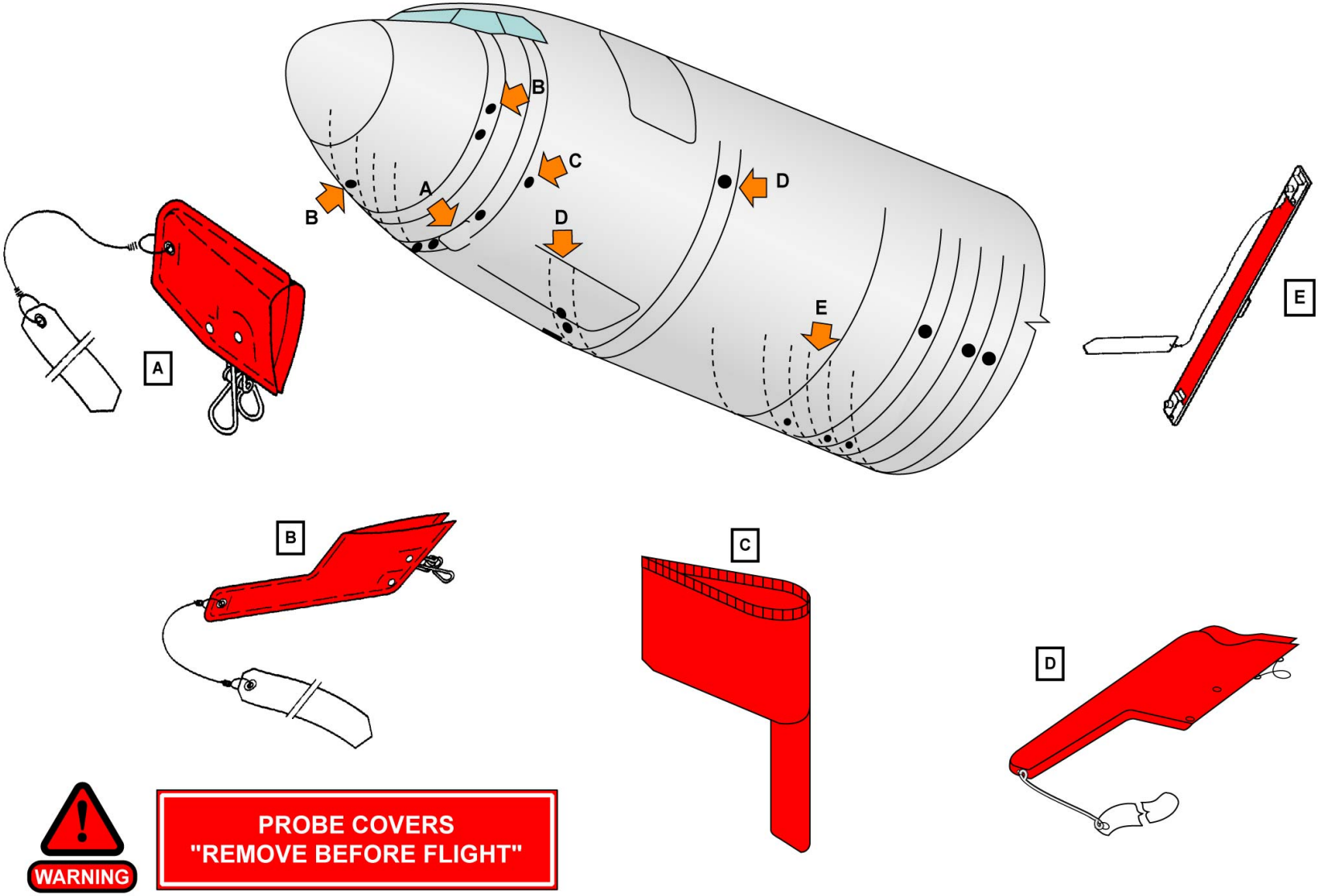

MAINTENANCE TIPS-PROBE HEAT SYSTEM

G7508471 - G3NT1T0 - FM30B100000003

WING ICE PROTECTION D/O (3)

GENERAL

The wing ice protection system prevents the formation of ice on the leading edge of slats No. 4, 5, 6 and 7. The system uses bleed air from the engines to heat the slats. The system is divided into two subsystems, one for each wing. Each subsystem is divided into two parts:
- one for the slat 4,
- one for the slats 5, 6 and 7.

G7508471 - G3NT1T0 - FM30D100000004

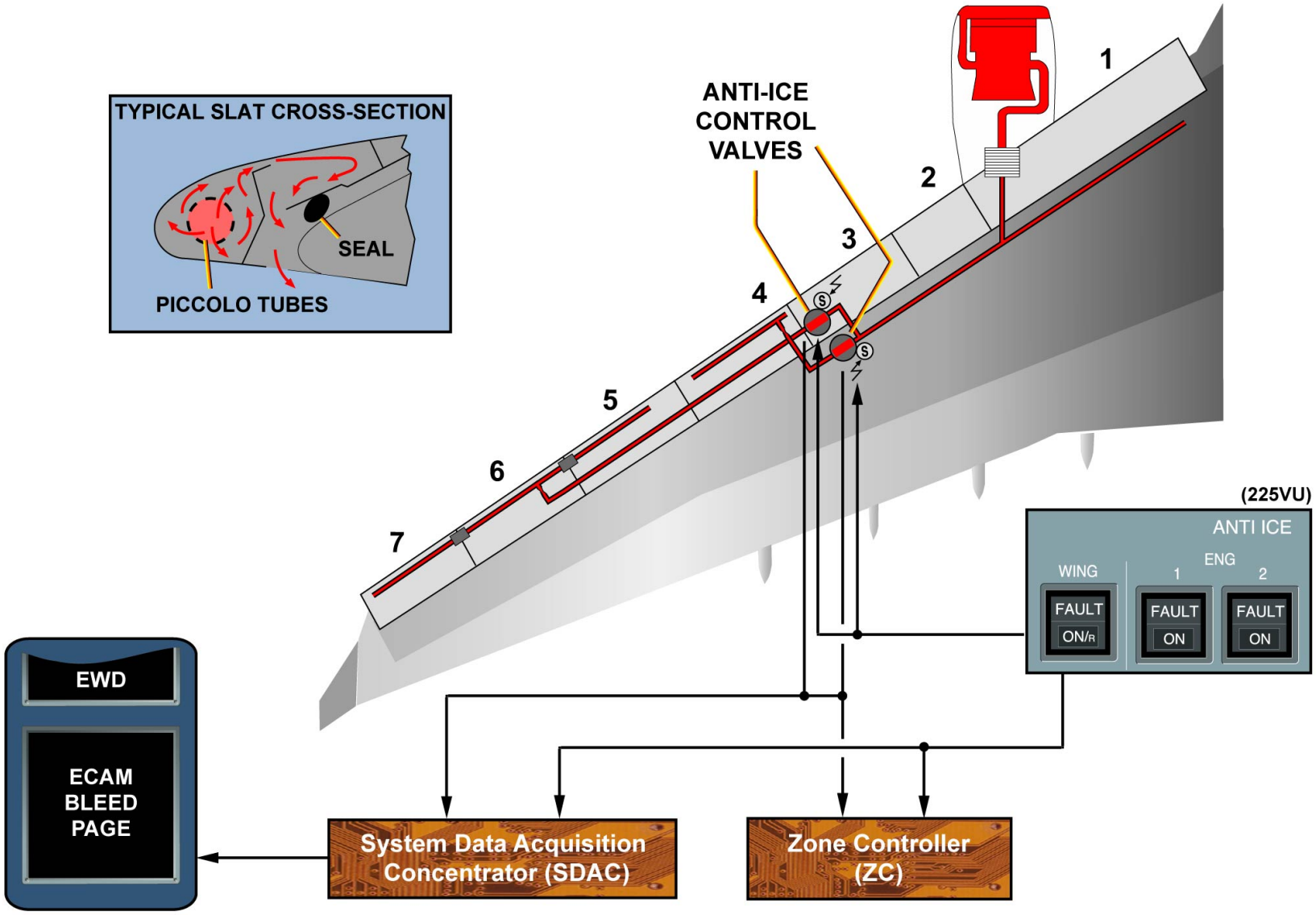

GENERAL

G7508471 - G3NT1T0 - FM30D100000004

WING ICE PROTECTION D/O (3)

WING ANTI-ICE AIR DUCTING DESCRIPTION

In each wing, bleed air goes through two anti-ice control valves, a telescopic duct, an in-line restrictor, a flexible duct and piccolo tubes. The telescopic duct extends and retracts with the movement of the slats, and connects the air supply from the rigid duct to the slat 4 and 6 piccolo tubes. Two flexible ducts connect the piccolo tube in slat 6 to the piccolo tubes in slats 5 and 7. The restrictor is installed downstream of each anti-ice valve. It limits the airflow to the slats. The piccolo tube releases the air into the slats through holes along their FWD length.

G7508471 - G3NT1T0 - FM30D1000000004

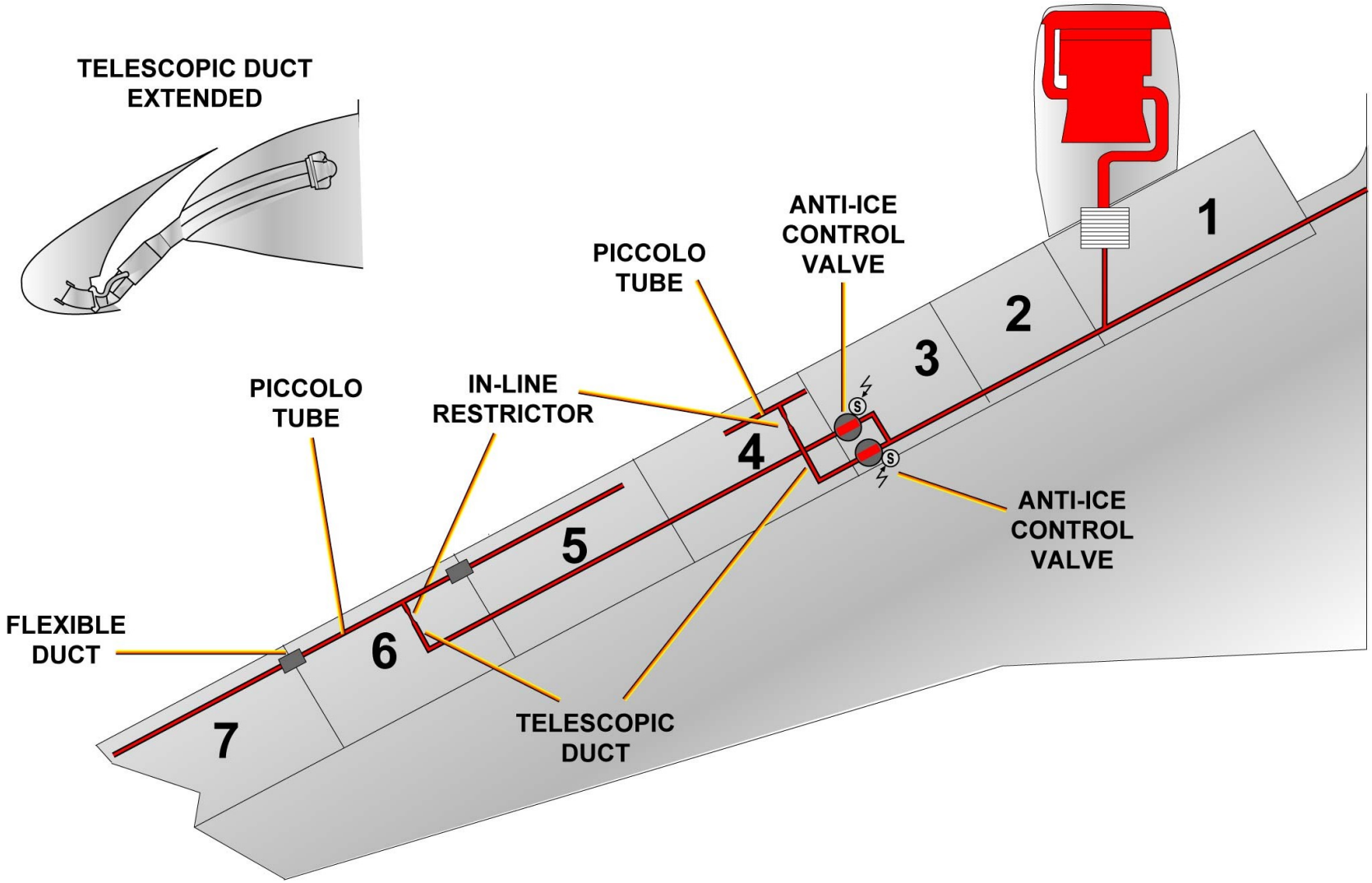

WING ANTI-ICE AIR DUCTING DESCRIPTION

WING ICE PROTECTION D/O (3)

WING ANTI-ICE VALVE DESCRIPTION

The wing anti-ice control valve is of the butterfly type, electrically controlled and pneumatically operated. This valve fulfills the pressure regulation, the shut-off function and is spring-loaded closed. The valve outlet pressure is controlled at 22.5 ± 2.5 PSI.
Each valve is composed of:
- an actuator rod,
- a butterfly body,
- a pilot-valve assembly,
- a solenoid valve,
- a valve position microswitch,
- two pressure switches,
- two ground test connections.

The anti-ice valve is installed in the fixed leading edge of the wing and is accessible through a dedicated panel. For A/C dispatch, the valve can be manually locked in the open or closed position by means of a manual activation/deactivation device. A visual indicator shows the open or closed position of the valve butterfly.

PRESSURE REGULATING VALVE INTERNAL OPERATION

When the solenoid valve is energized, the poppet moves to the open position. This movement connects the top chamber of the actuator to the atmosphere. The upstream bleed-air pressure is transmitted to the middle chamber of the actuator. This pressure is larger than the force of the spring in the top chamber, then the actuator rod moves up and opens the butterfly.
The pressure downstream of the butterfly is transmitted to the inner chamber of the pilot valve.
When this pressure becomes greater than the force of the spring in the outer pilot-valve chamber, the diaphragm extends, which moves the check valve. This connects the upstream pressure to the top chamber of the actuator. The increase of pressure in the top chamber causes the actuator rod to move down. This moves the butterfly near the closed position, which decreases the downstream pressure.
If the downstream pressure decreases, the spring (in the pilot-valve outer chamber) moves the needle to its initial position. The pressure in the top chamber decreases and the actuator rod moves up. This moves the butterfly to the open position.
When the solenoid is de-energized, the valve butterfly is closed.

G7508471 - G3NT1T0 - FM30D100000004

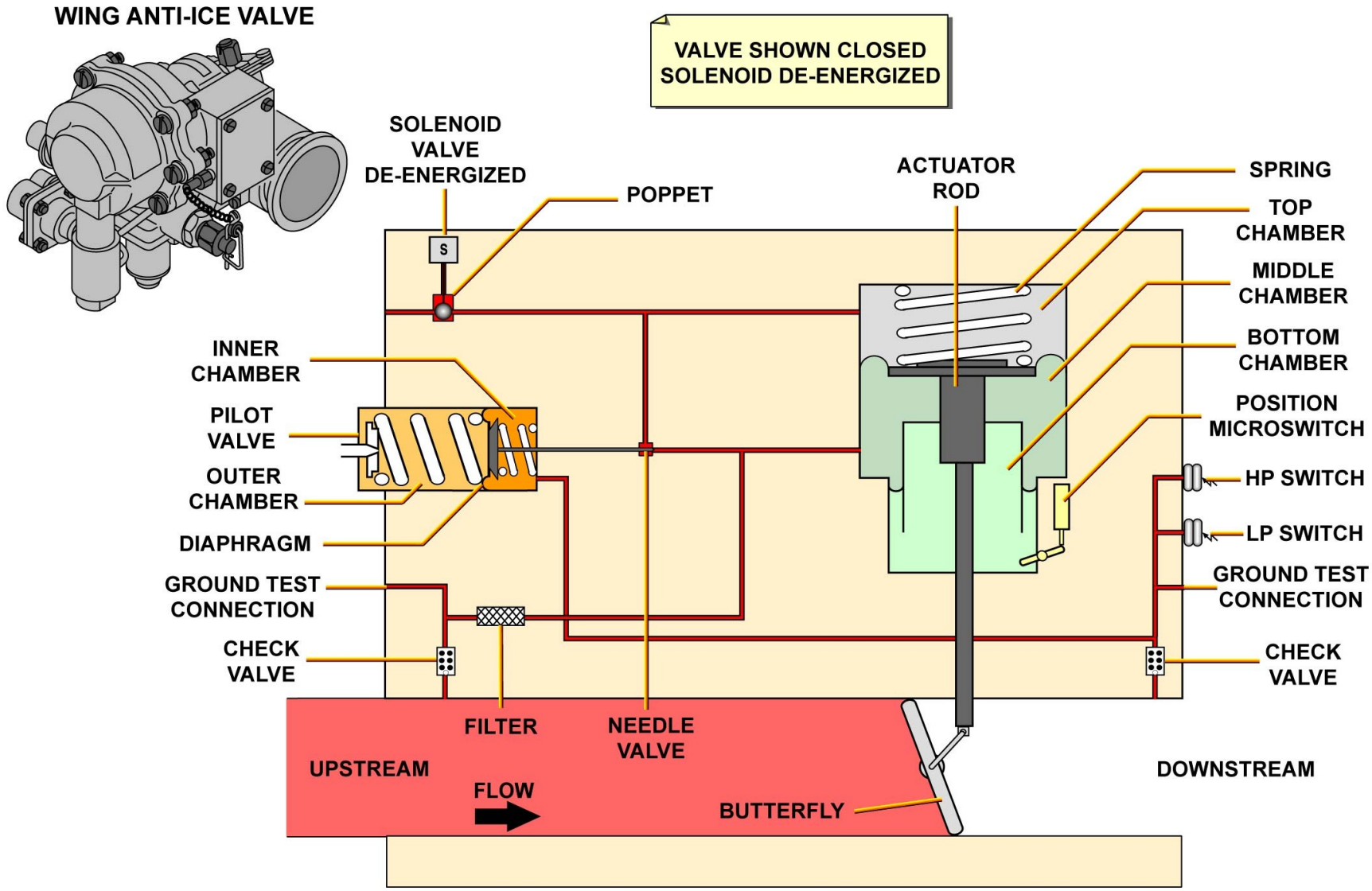

WING ANTI-ICE VALVE DESCRIPTION - PRESSURE REGULATING VALVE INTERNAL OPERATION

G7508471 - G3NT1T0 - FM30D100000004

WING ICE PROTECTION D/O (3)

OPERATION

This part describes the wing anti-ice system in normal and abnormal operation and monitoring.

NORMAL OPERATION

The wing anti-ice system is normally used in flight and can also be tested on ground for 30 seconds.

In flight: When the WING ANTI-ICE P/BSW is selected ON, the ON light comes on, the MODE and GROUND TEST relays are open and the CONTROL relay is closed. The valve solenoids are energized allowing the valves to open and to regulate at 22.5 ± 2.5 PSI. The WING ANTI ICE indication is displayed in green on the EWD.

The Engine Electronic Controller (EEC) or the Engine Control Unit (ECU) acquires the P/BSW configuration through the Engine Interface and Vibration Monitoring Unit (EIVMU) for engine power increase according to the bleed demand. The Zone Controller (ZC) acquires discrete inputs from the wing anti-ice system to monitor the system and manage the bleed air.

For each system, the valve position microswitch in the actuator body gives the butterfly position. This information is transmitted to the ECAM for ANTI ICE white indication and for green anti-ice valve symbol indications on the SD BLEED page. When the P/BSW is released out, the valve solenoids are de-energized and the valves close, no indication is displayed on the BLEED page of the SD.

On ground: Landing Gear Control and Interface Unit 1 (LGCIU1) sends a ground signal to the MODE relay.

When the WING ANTI-ICE P/BSW is selected ON, the MODE relay is energized and the GROUND TEST relay is open for 30 seconds. Consequently the CONTROL relay is also closed for 30 seconds allowing the valves to be energized for a limited time, thus preventing the slats from overheating. After 30 seconds, the GROUND TEST relay closes and de-energizes the valves through the CONTROL relay.

A functional test of the valve is possible using APU bleed air. For that purpose the APU Electronic Control Box (ECB) receives a discrete from the GROUND TEST relay to boost the bleed air during the ground wing anti-ice test.

G7508471 - G3NT1T0 - FM30D100000004

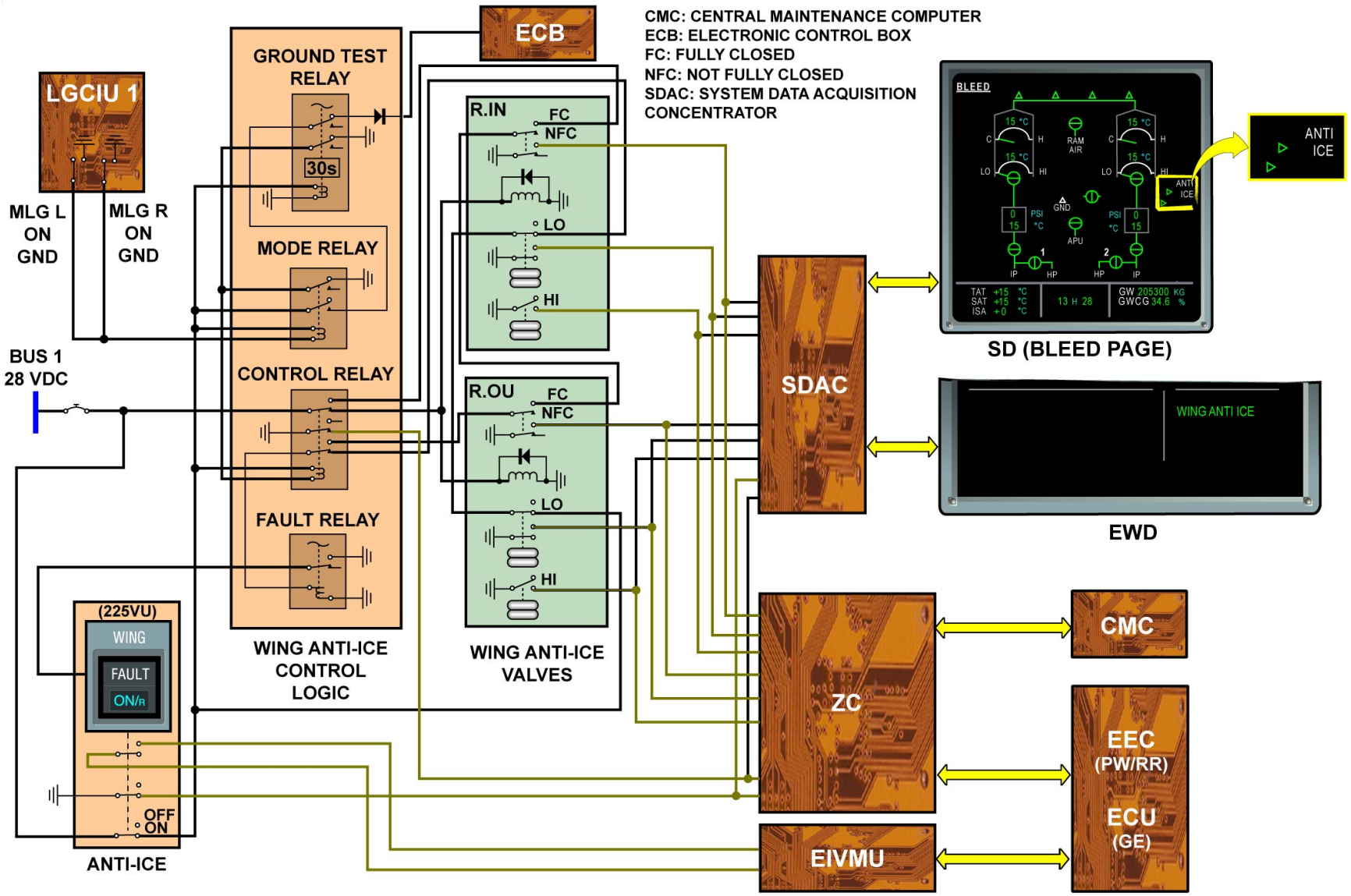

OPERATION - NORMAL OPERATION

G7508471 - G3NT1T0 - FM30D100000004

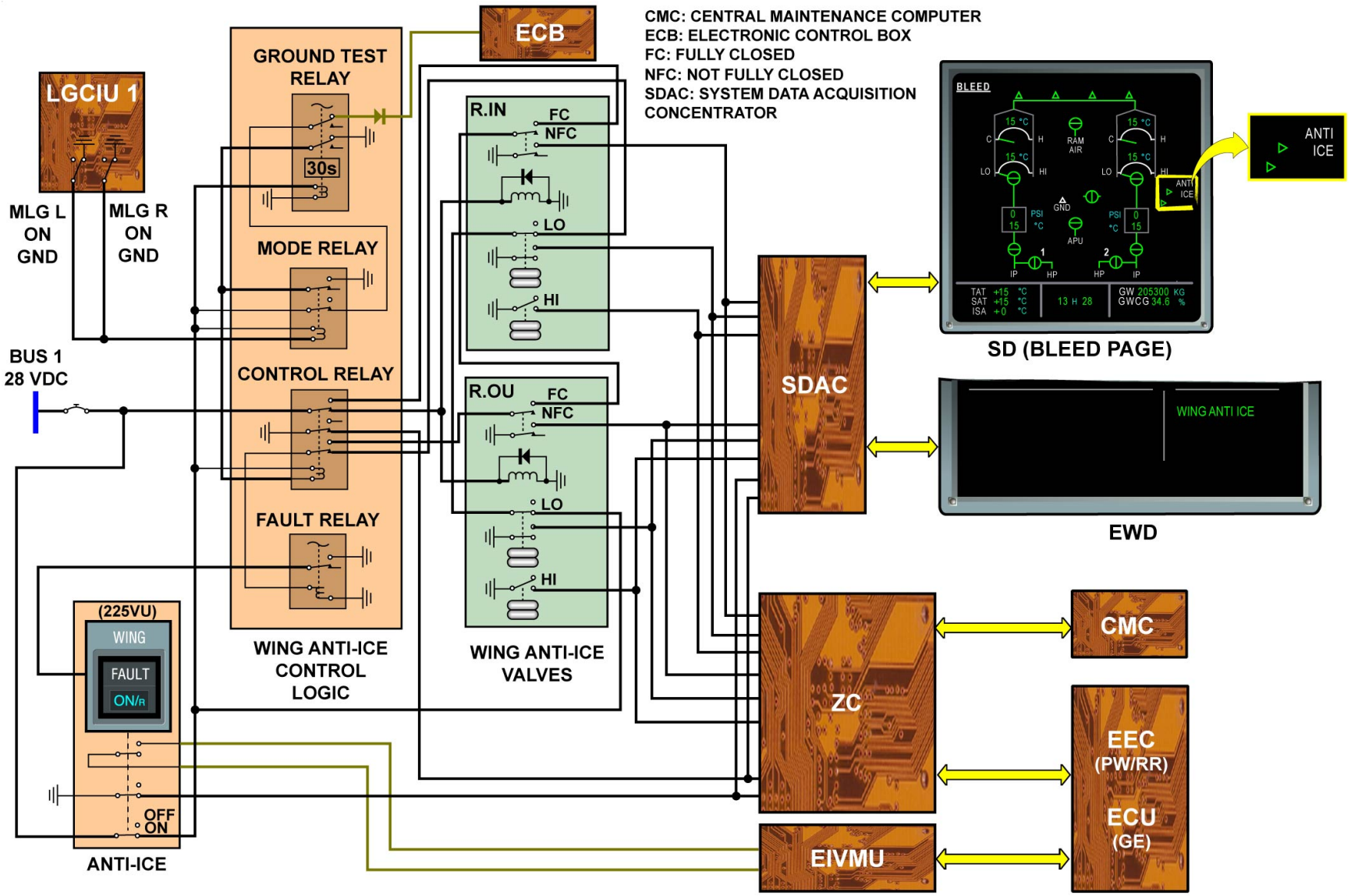

OPERATION - NORMAL OPERATION

G7508471 - G3NT1T0 - FM30D100000004

This Page Intentionally Left Blank

G7508471 - G3NT1T0 - FM30D1000000004

WING ICE PROTECTION D/O (3)

OPERATION (continued)

ABNORMAL OPERATION

A failure is detected by a logic that combines the P/BSW switch position, the status of the valve position microswitch and the LP switch state.

When the WING ANTI ICE P/BSW is selected ON and the valve is not open, the associated LP switch controls the FAULT relay to open. The P/BSW FAULT legend comes on. The A.ICE WING VALVE NOT OPEN warning message is displayed on the ECAM. On the BLEED page of the SD, the ANTI ICE indication is displayed in amber.

When the WING ANTI ICE P/BSW is selected off but the valve is not closed, as detected by the microswitch, the P/BSW FAULT legend comes on. The A.ICE L(R) INR(OUTR) WING OPEN warning message is triggered on the ECAM.

The wing anti-ice system is only used in flight so, on ground, the valves must be closed (except during test). In this condition, if the valves are open, the A.ICE WING OPEN ON GND warning message is triggered on the ECAM and the P/BSW FAULT legend comes on.

When a wing anti-ice control relay failure is detected, the A.ICE WAI SYS FAULT warning message is displayed on the ECAM. The P/BSW FAULT legend comes on.

When the system is ON and any valve is open with a LP detection (13.5 ± 0.5 PSI), the A.ICE L(R) INR(OUTR) LO PR message is displayed on the ECAM and the FAULT light comes on, on the P/BSW.

At the same time, fault messages are sent to the Central Maintenance Computer (CMC) via the ZC.

G7508471 - G3NT1T0 - FM30D100000004

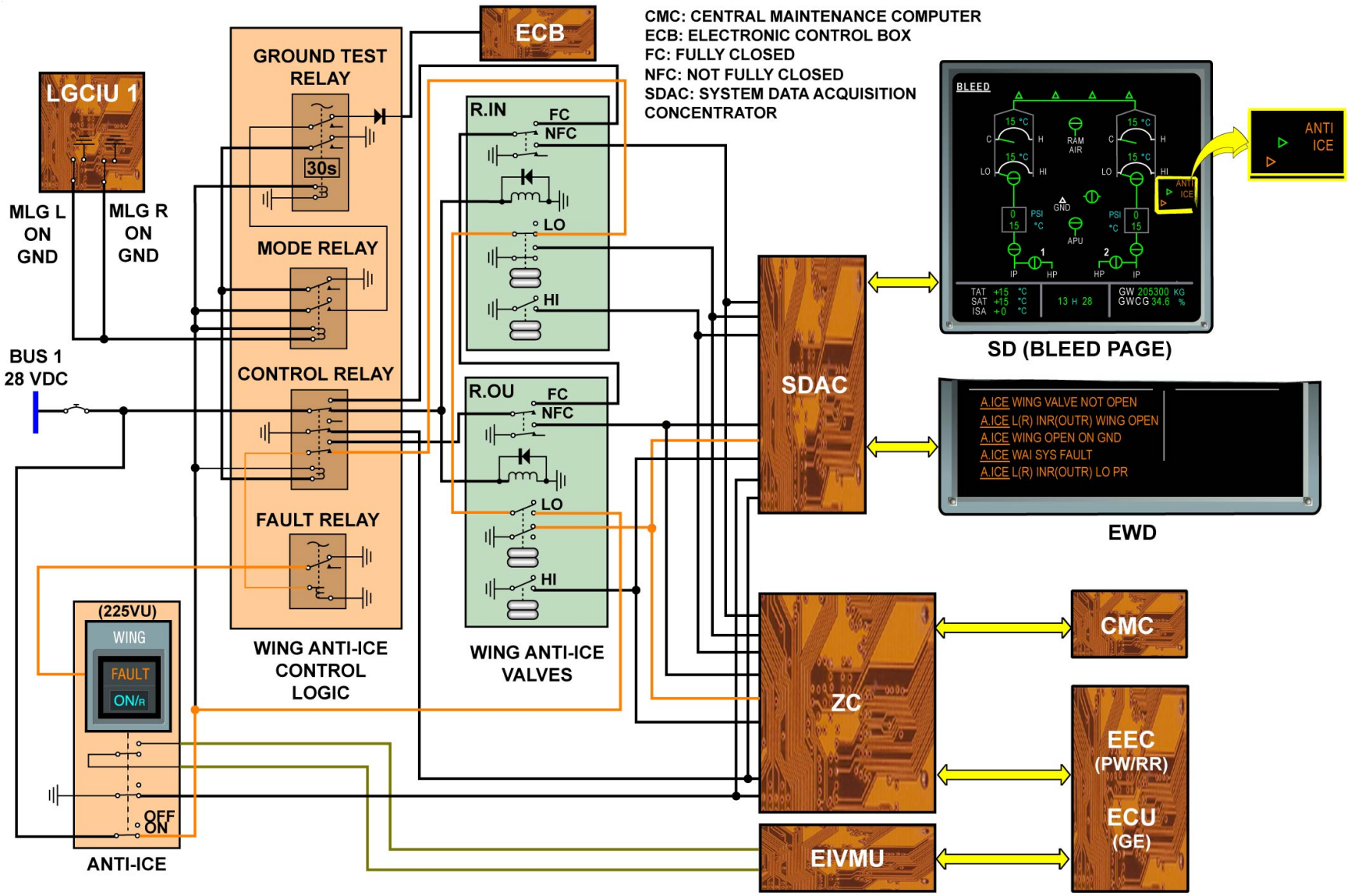

OPERATION - ABNORMAL OPERATION

G7508471 - G3NT1T0 - FM30D100000004

WING ICE PROTECTION D/O (3)

OPERATION (continued)

MONITORING

On the ground, the wing ice-protection system test starts when the WING ANTI ICE P/BSW is selected ON. If the test continues for more than 35 seconds, the ECAM shows the warning message A.ICE GND TST OVRUN. The crew must then stop the operation of the wing ice-protection system to prevent heat damage to the slats.
During valve operation, if the downstream pressure increases to 31 ± 1 PSI, the related High Pressure (HP) switch gives an HP signal and the A.ICE L(R) INR(OUTR) HI PR warning message is displayed on the ECAM. The valve symbol and the ANTI ICE indication are displayed in amber color on the SD BLEED page.
In those two cases, with warning messages displayed on the ECAM, the P/BSW FAULT legend is not on

G7508471 - G3NT1T0 - FM30D1000000004

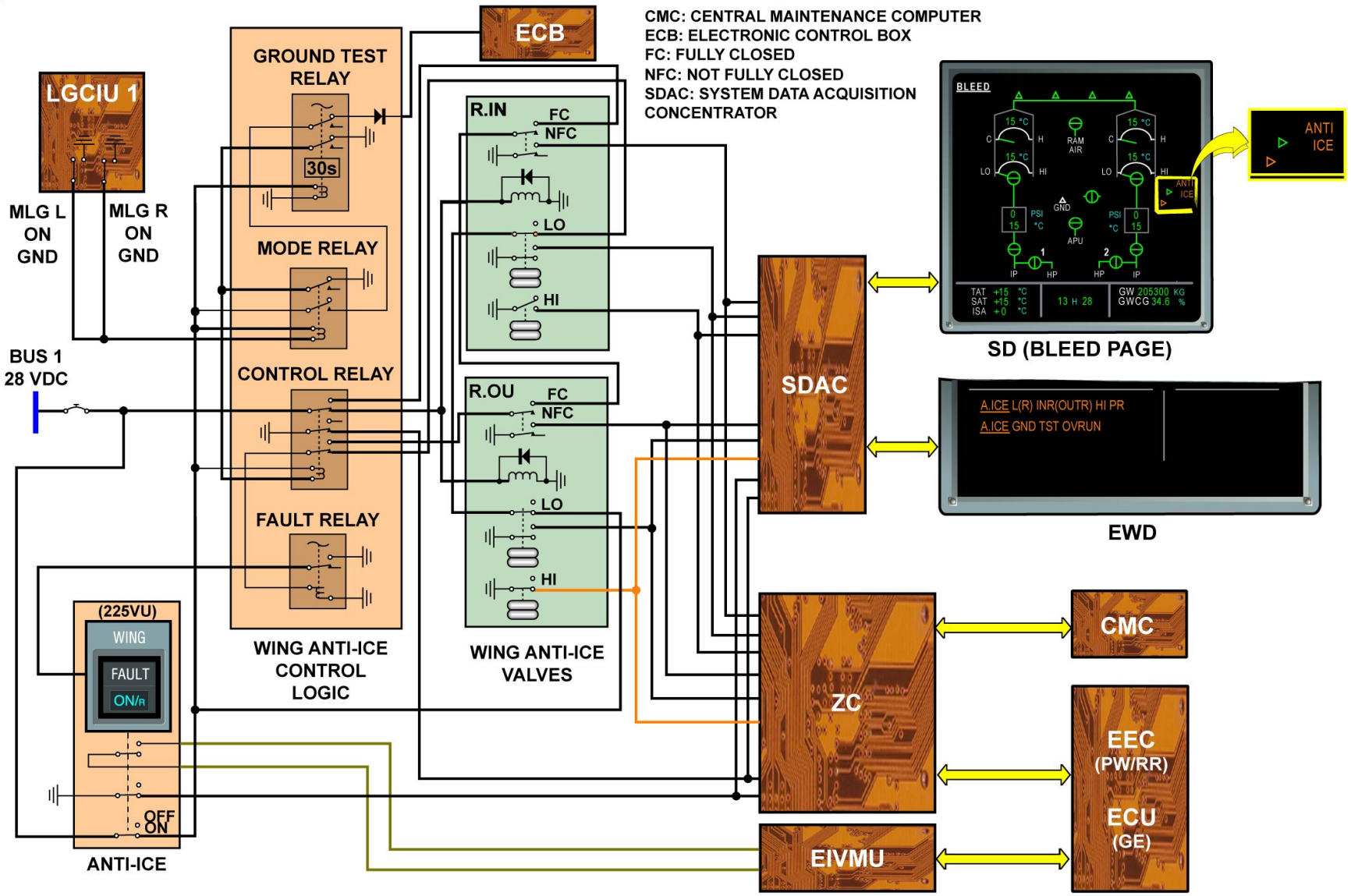

OPERATION - MONITORING

G7508471 - G3NT1T0 - FM30D100000004

ENGINE AIR INTAKE ICE PROTECTION D/O (3)

GENERAL

Engine air intake ice protection is achieved by heating the nose cowl lip with air bleed from the third stage of the engine compressor.

G7508471 - G3NT1T0 - FM30D200000004

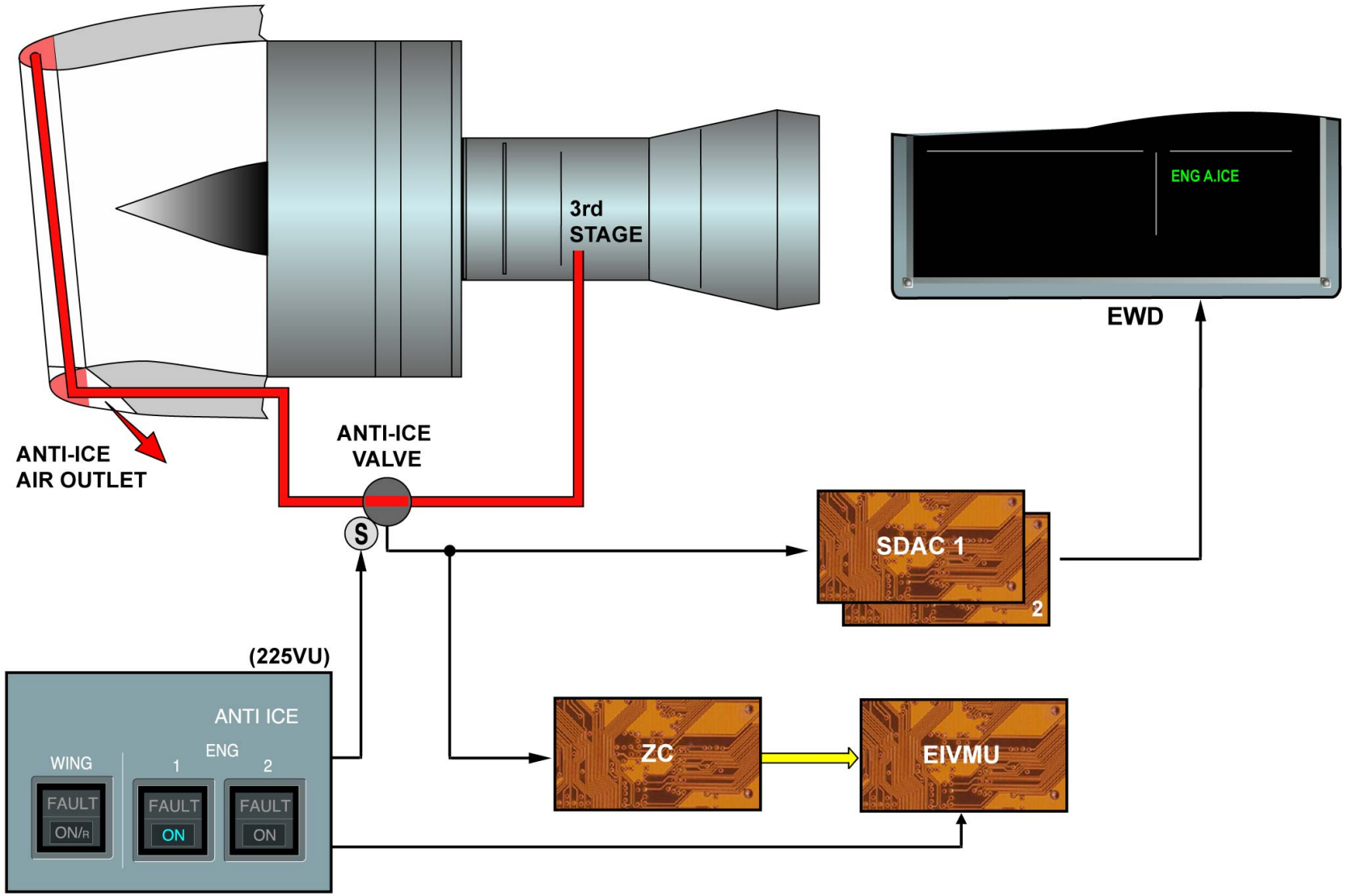
3rd
STAGE
ENG A.ICE
EWD
ANTI-ICE
AIR OUTLET
ANTI-ICE
VALVE
S
SDAC 1
2
(225VU)
ANTI ICE
WING
ENG
1
2
FAULT
ON/R
FAULT
ON
FAULT
ON
ZC
EIVMU

GENERAL

ENGINE AIR INTAKE ICE PROTECTION D/O (3)

ENGINE ANTI-ICE AIR DUCTING DESCRIPTION

The air bleed from the engine compressor goes through duct sections, a pressure-regulating anti-ice valve and a venturi restrictor. Air is then sprayed through a piccolo tube into the nose cowl lip. The ducting is in four sections, three engine mounted (upper, lower and FWD) and one mounted in the fan cowl. The venturi restrictor is installed at the interface between the feed duct and the FWD duct. It limits the bleed airflow of the third stage in case of duct rupture.

G7508471 - G3NT1T0 - FM30D200000004

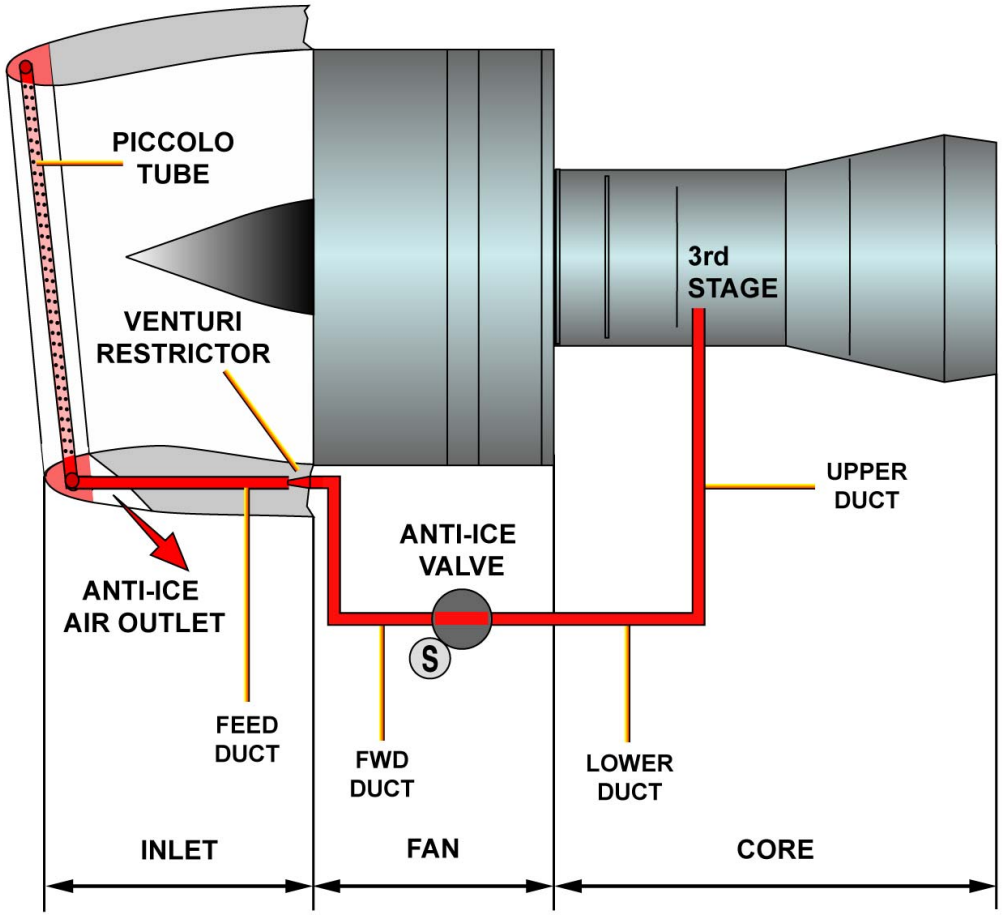

ENGINE ANTI-ICE AIR DUCTING DESCRIPTION

G7508471 - G3NT1T0 - FM30D200000004

ENGINE AIR INTAKE ICE PROTECTION D/O (3)

ENGINE ANTI-ICE VALVE DESCRIPTION

The engine anti ice valve is of the butterfly type, electrically controlled and pneumatically actuated. This valve performs both pressure regulation and shut-off and is spring-loaded open. When the valve operates, it regulates the maximum downstream air pressure to 62 psi.
The engine anti-ice valve has:
- a butterfly valve sub-assembly,
- an actuator sub-assembly,
- a pilot regulator sub-assembly,
- HP and LP pressure switches,
- one filter,
- an ON/OFF solenoid.

The valve is installed on the lower left hand side of the engine. The bleed air source is taken on the HP compressor on the right hand side of the engine. The ENGine ANTI ICE panel gives access to the inlet tube. The fan cowl doors give access to the engine anti-ice valve.
The valve can be manually locked in the fully open or fully closed position by means of a hexagon selector. On the valve, a visual indicator shows the valve position.

ENGINE ANTI-ICE INTERNAL OPERATION

When the solenoid is de-energized, the solenoid poppet moves to the spring-loaded retract position, and inlet air pressurizes the extend side of the actuator. This pressure combined with actuator spring force and the clock spring forces overcome the air pressure on the retract side of the actuator, so the piston moves to the open position. Once the valve is open, the pilot regulator makes sure that a constant outlet pressure of 62 psi is maintained by balancing the air pressure in the piston chambers.
When the solenoid is energized, the solenoid poppet moves to block the airflow to the extend side of the piston, thus the air pressure increases on the actuator retract side, so that the butterfly valve closes.

G7508471 - G3NT1T0 - FM30D200000004

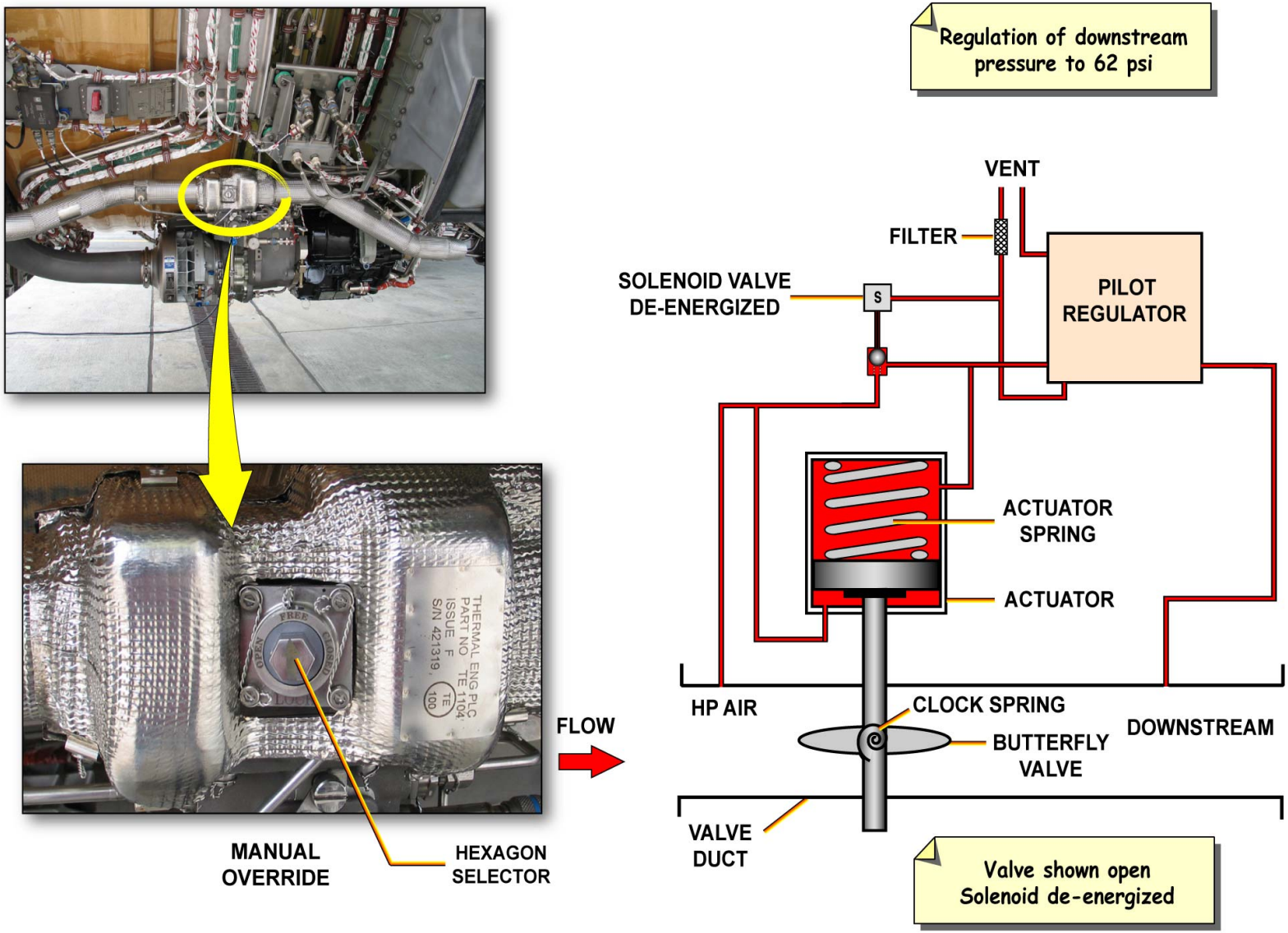

ENGINE ANTI-ICE VALVE DESCRIPTION - ENGINE ANTI-ICE INTERNAL OPERATION

ENGINE AIR INTAKE ICE PROTECTION D/O (3)

ENGINE ANTI-ICE VALVE OPERATION

This topic describes the normal, abnormal operation and the engine anti-ice valve monitoring.

NORMAL OPERATION

When the engine operates and the ENG ANTI ICE P/BSW is selected ON:
- the valve solenoid is de-energized,
- the valve opens and regulates at 62 psi.

The valve LP switch is used to detect the open position of the valve when the pressure is more than 6 psi. This information is transmitted to the ECAM for ENG A. ICE green memo indication on the EWD.
The Engine Interface and Vibration Monitoring Unit (EIVMU) acquires the configuration of the ENG ANTI ICE P/BSW and transmits it to the Engine Electronic Controller (EEC).
The Zone Controller (ZC) uses the position of the ENG ANTI ICE P/BSW or the position of the engine anti-ice valve (provided by the LP switch) to calculate the bleed status coefficients.
When the ENG ANTI ICE P/BSW is selected off, the solenoid is energized and the valve closes. No indication is then displayed on the memo area of the EWD.

G7508471 - G3NT1T0 - FM30D200000004

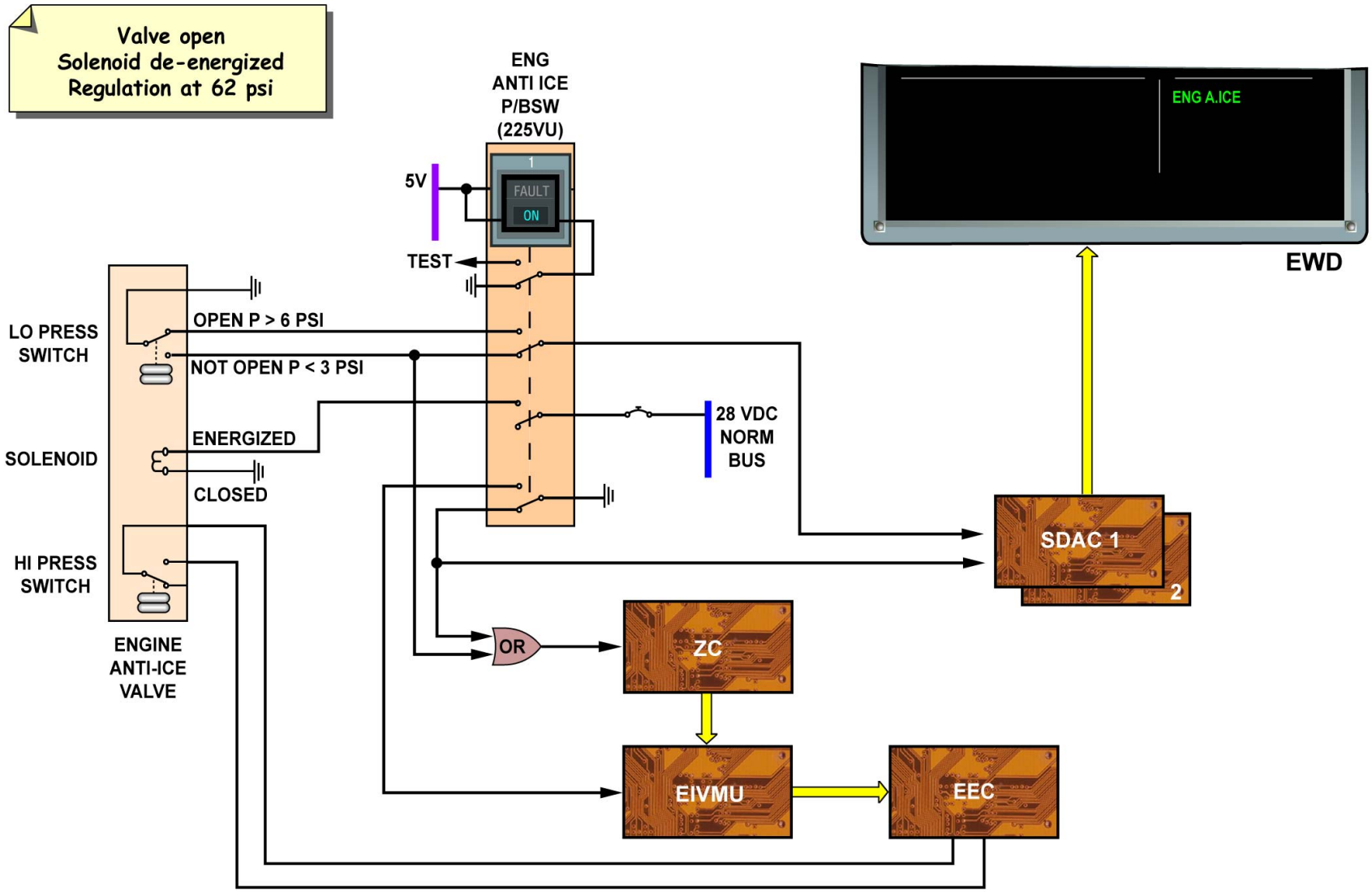

ENGINE ANTI-ICE VALVE OPERATION - NORMAL OPERATION

G7508471 - G3NT1T0 - FM30D200000004

ENGINE AIR INTAKE ICE PROTECTION D/O (3)

ENGINE ANTI-ICE VALVE OPERATION (continued)

ABNORMAL OPERATION

A failure is detected by a logic that combines the P/BSW configuration and the pressure downstream of the engine anti-ice valve.
When the ENG ANTI ICE P/BSW is selected ON but the valve is not open, the P/BSW FAULT legend comes on through the FAULT relay. The A.ICE ENG 1 (or 2) VALVE CLOSED and AVOID ICING CONDITIONS warning messages are triggered on the EWD.
When the ENG ANTI ICE P/BSW is selected off but the valve is not closed, the P/BSW FAULT legend comes on. Then, the A. ICE ENG 1 (or 2) VALVE OPEN warning message is triggered on the EWD.

G7508471 - G3NT1T0 - FM30D200000004

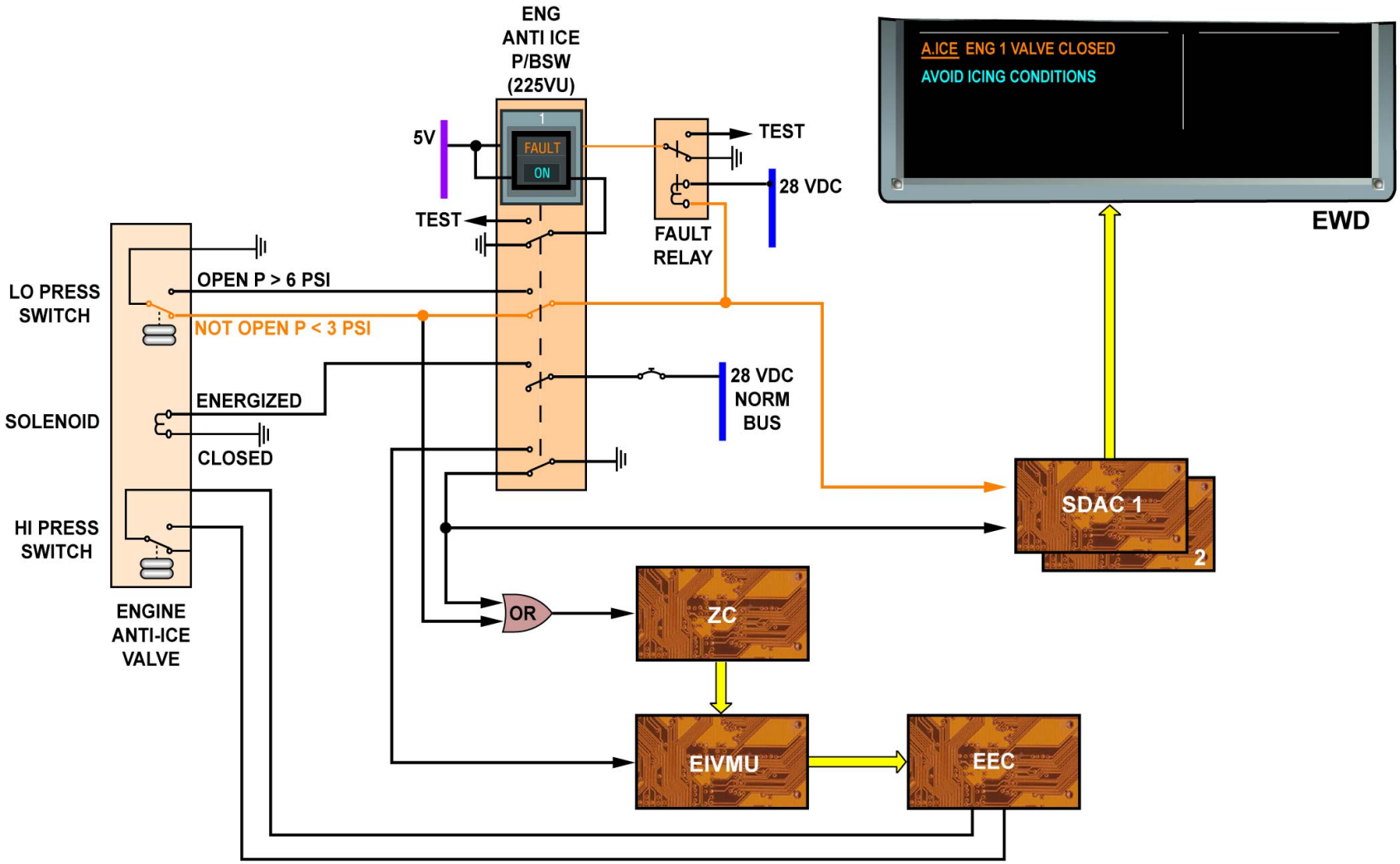

ENGINE ANTI-ICE VALVE OPERATION - ABNORMAL OPERATION

G7508471 - G3NT1T0 - FM30D200000004

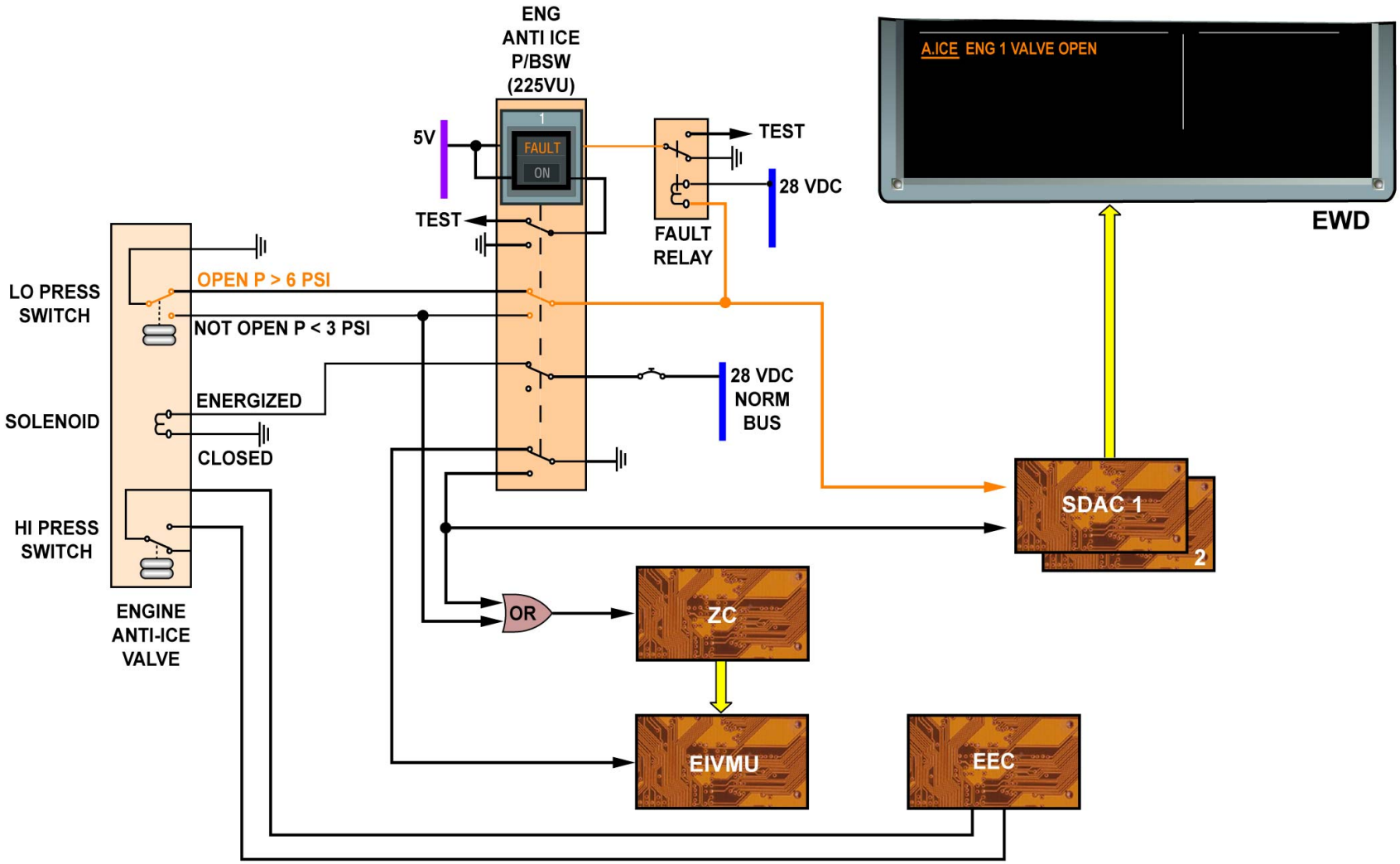

ENGINE ANTI-ICE VALVE OPERATION - ABNORMAL OPERATION

G7508471 - G3NT1T0 - FM30D200000004

This Page Intentionally Left Blank

G7508471 - G3NT1T0 - FM30D200000004

ENGINE AIR INTAKE ICE PROTECTION D/O (3)

ENGINE ANTI-ICE VALVE OPERATION (continued)

ENGINE ANTI-ICE VALVE MONITORING

The valve switch monitors the regulation function of the valve. The pressure operating setting of this switch is 85 psi (maximum rising pressure) to 72 psi (minimum falling pressure).
If the engine anti-ice valve downstream pressure increases above the normal regulation range and reaches 85 psi, a class 2 fault message is triggered by the EEC..

G7508471 - G3NT1T0 - FM30D200000004

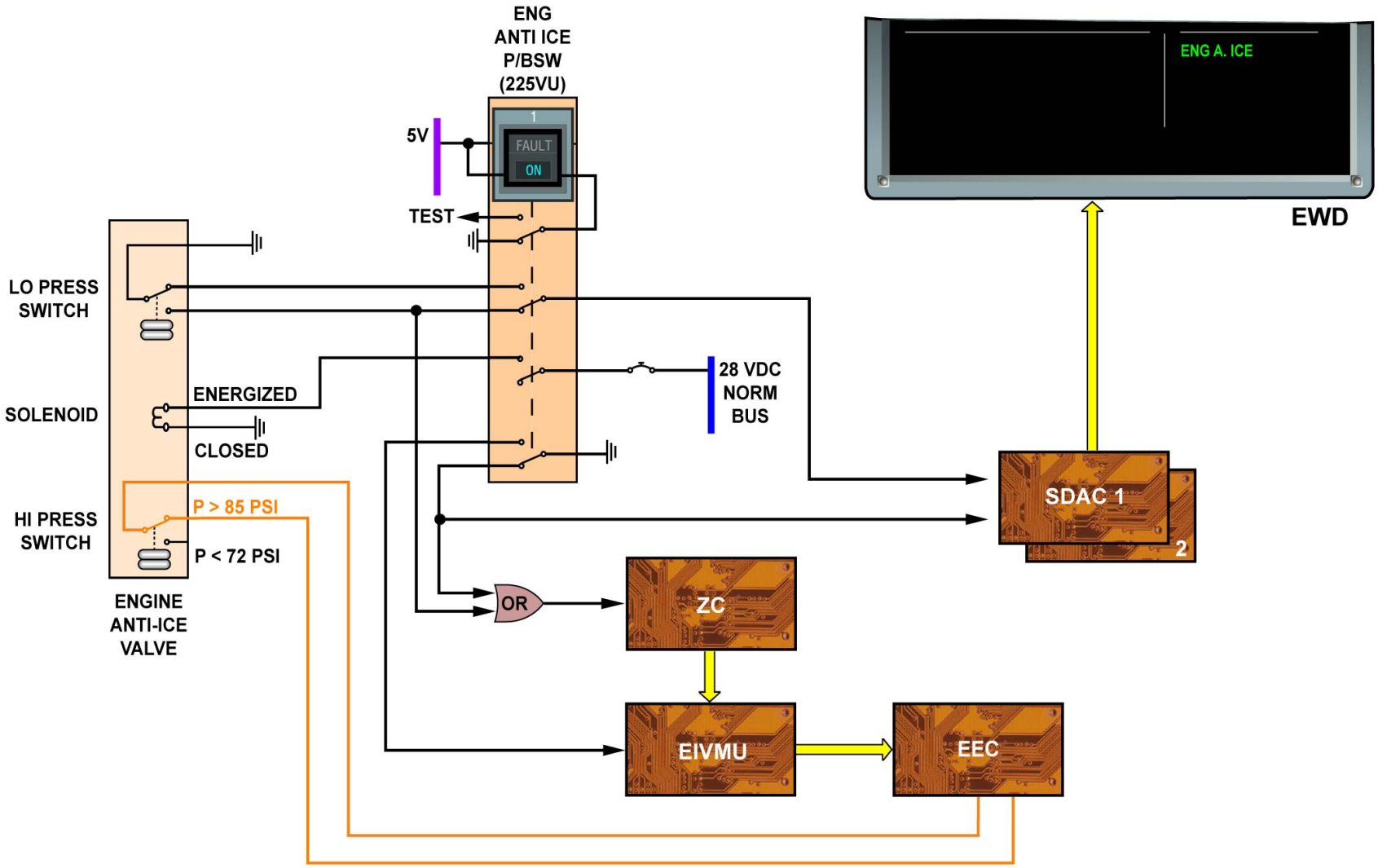

ENGINE ANTI-ICE VALVE OPERATION - ENGINE ANTI-ICE VALVE MONITORING

G7508471 - G3NT1T0 - FM30D200000004

PROBE ICE PROTECTION D/O (3)

GENERAL

The function of the probe ice protection system is to provide probe electrical heating to prevent ice formation. An electrical heating system integral with each probe operates to maintain probe efficiency. The Probe Heat Computer (PHC) ensures permanent monitoring of probes automatically. In cases of severe icing conditions on ground, automatic operation can be overridden by means of the Probe & Windows Heat P/BSW.

G7508471 - G3NT1T0 - FM30D7000000001

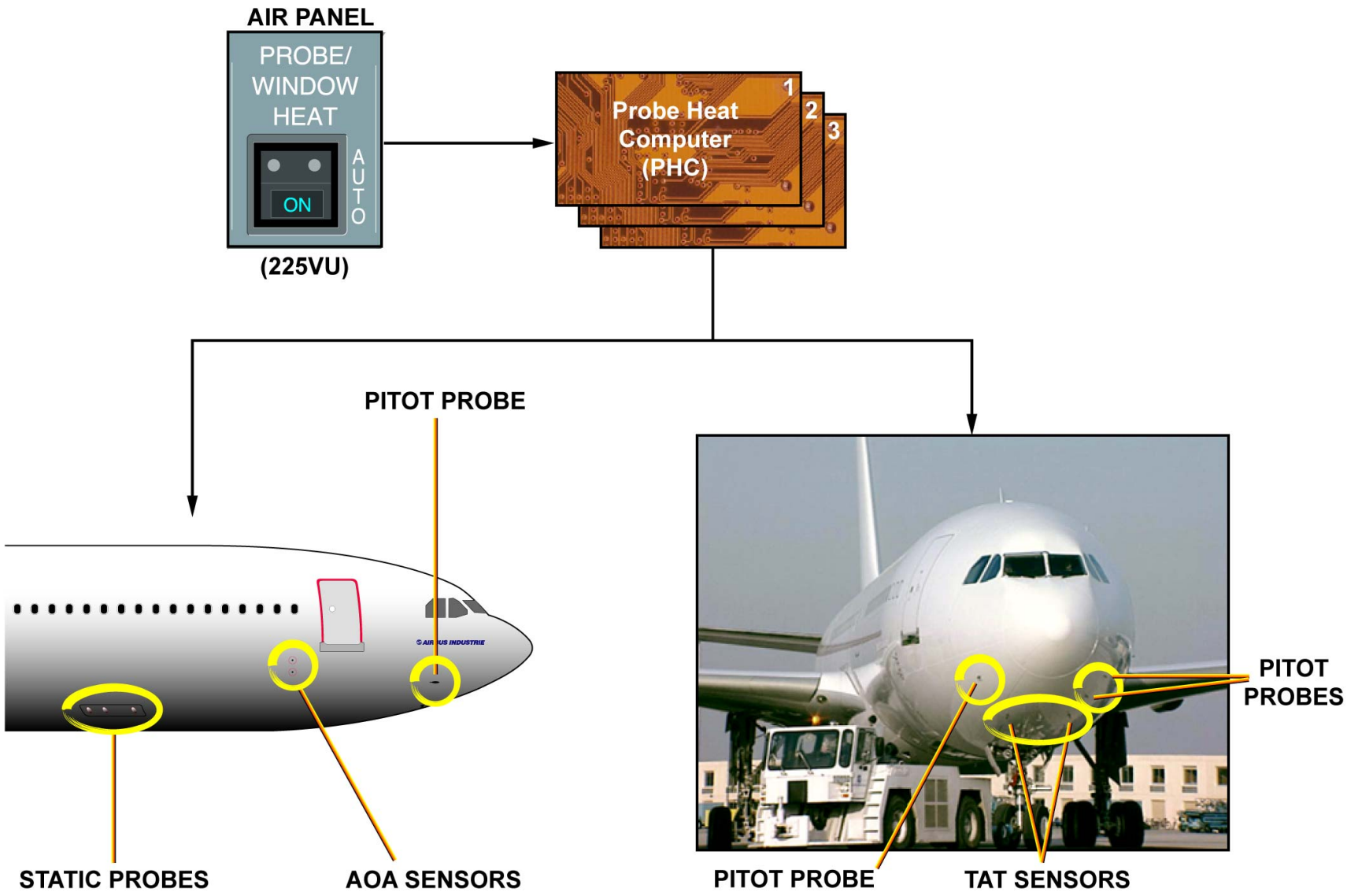

GENERAL

G7508471 - G3NT1T0 - FM30D7000000001

PROBE ICE PROTECTION D/O (3)

CONTROL AND OPERATION

Captain, First Officer and standby probes are heated by independent systems controlled by a PHC. The standby system has no Total Air Temperature (TAT) probe.
The heated probes are: static ports, Angle Of Attack (AOA), pitot and TAT. Probes and static ports are automatically heated when engine 1 or 2 (engine 2 or 3 for A340) is started on ground or in flight using the landing gear status. TAT probes are heated only in flight and pitot probes have 2 heating levels, low on ground and normal in flight. The Probe & Windows Heat P/BSW overrides the automatic operation.

INDICATING

In case of a probe heating fault, the PHC sends an output to the Flight Warning Computer (FWC), via the Air Data/Inertial Reference Unit (ADIRU), which generates an ECAM and an aural warning. The PHC also transmits fault messages to the Central Maintenance Computer (CMC).

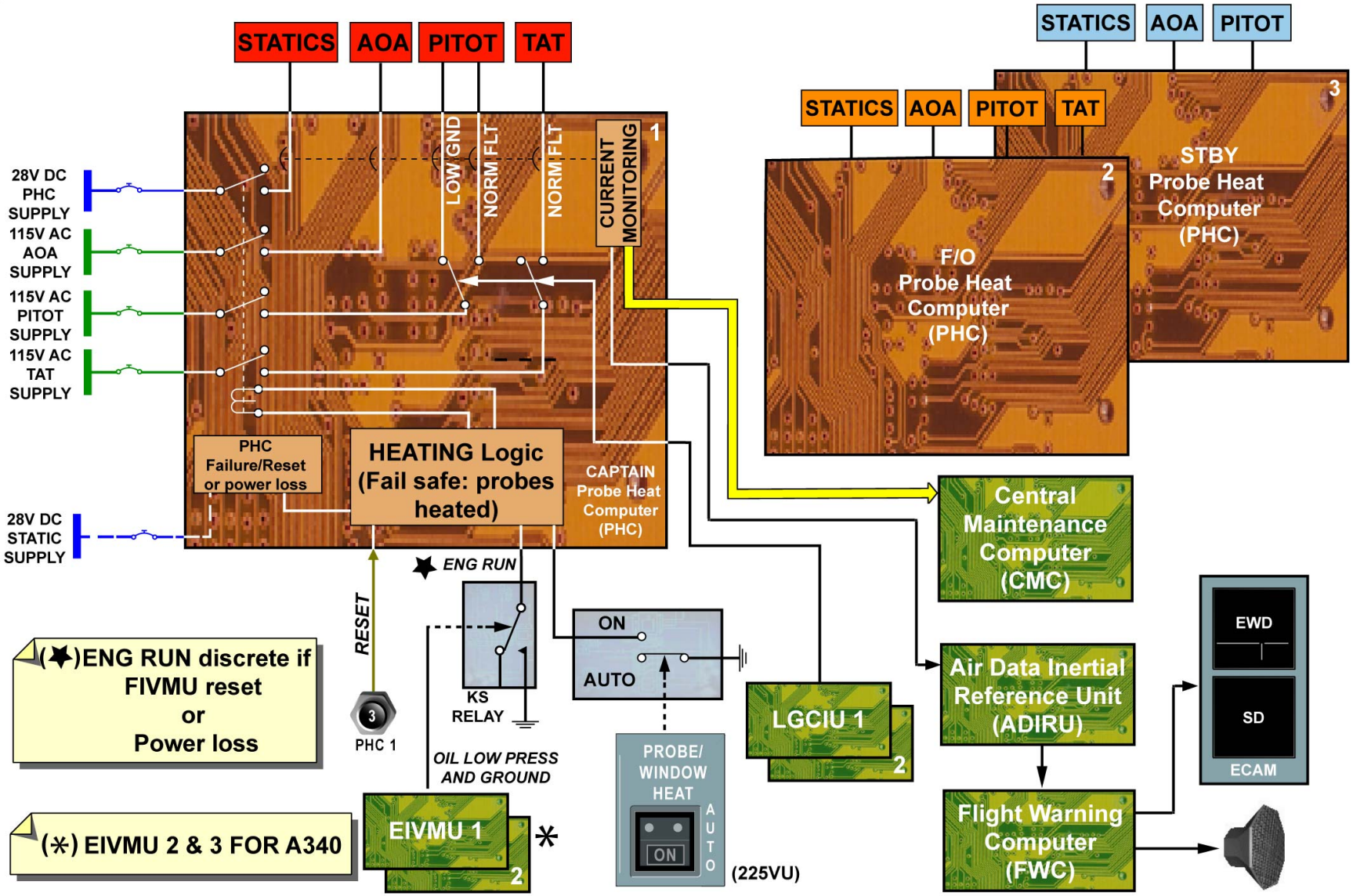

CONTROL AND OPERATION & INDICATING

G7508471 - G3NT1T0 - FM30D700000001

WINDSHIELD A.ICE/DEFOGGING & RAIN PROT D/O (3)

COCKPIT WINDOWS ANTI-ICE DEFOGGING AND RAIN PROTECTION GENERAL

The anti-icing and defogging system keeps a clear visibility through the windshield and windows in icing or foggy conditions. This is achieved by electrical heating of the windshield and windows. In heavy rain conditions, rain removal from the windshield is done by two independent wipers and a rain repellent liquid, stored in a pressurized bottle, which may be sprayed onto the windshield to improve visibility.

G7508471 - G3NT1T0 - FM30D800000001

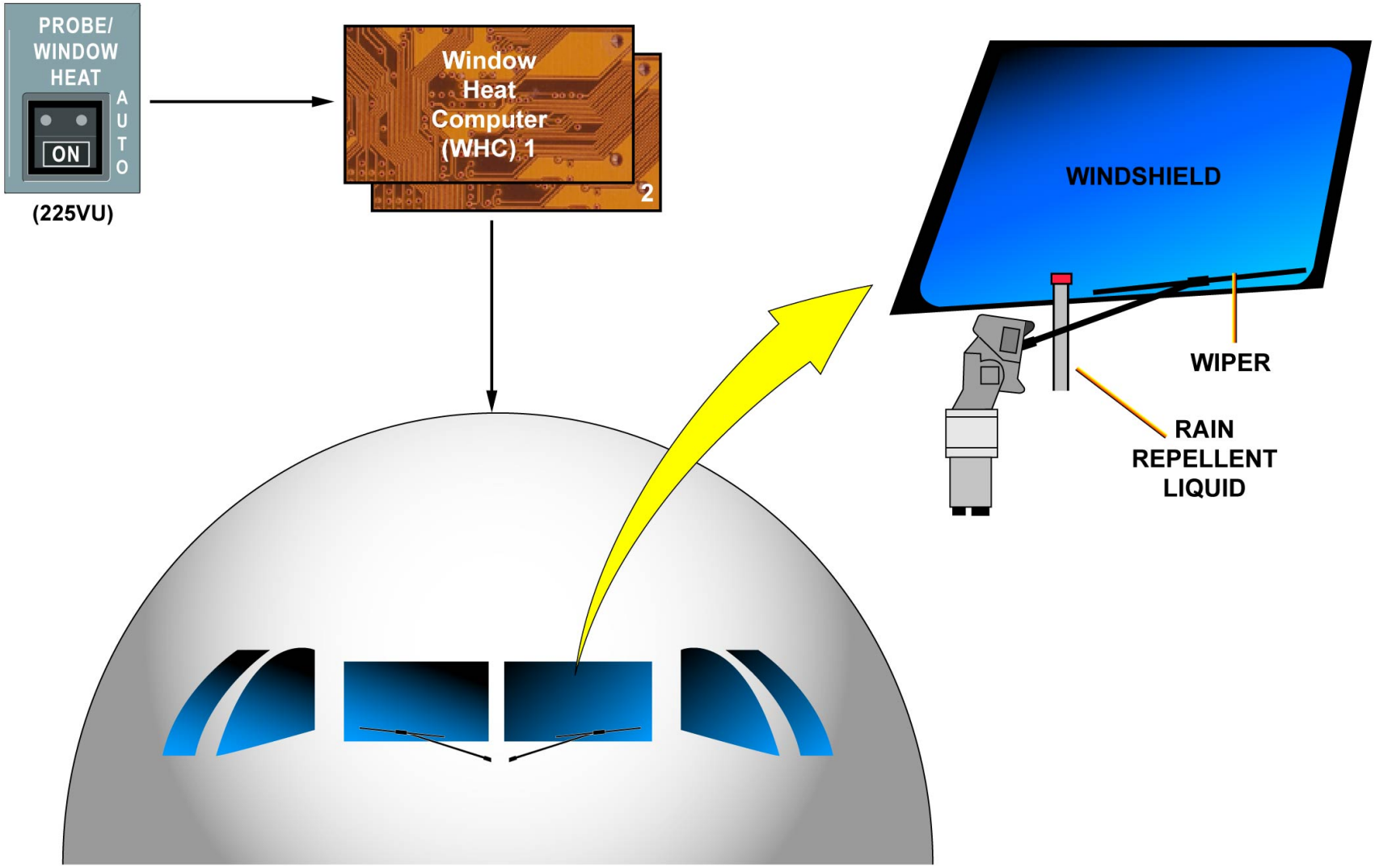

COCKPIT WINDOWS ANTI-ICE DEFOGGING AND RAIN PROTECTION GENERAL

WINDSHIELD A.ICE/DEFOGGING & RAIN PROT D/O (3)

ANTI-ICE AND DEFOGGING CONTROL AND MONITORING

Heating is automatically initiated at first engine start-up (inboard engine for A340) and stops at last engine shut-down. The PROBE & WINDOW HEAT P/BSW overrides the automatic operation.
Monitoring and overheat protection control are achieved by two fully independent Window Heat Computers (WHCs), one for each side. For the windshield, there are 2 heating levels, low on ground and normal in flight and only one heating level for windows. Fixed and sliding windows are heated in series. Ground/flight information is given by the status of the landing gear.
The WHC controls the windshield and windows temperature heating using temperature feedback from the temperature sensors. There are 3 sensors installed on the windshield and 3 sensors installed on each fixed window.
The WHC is connected to two sensors of the windshield and one sensor of each fixed window. If one sensor (N°1) of the windshield fails, the WHC automatically switches to the second sensor (N°3) without any maintenance action (first sensor failure identified by related class 3 Central Maintenance Computer (CMC) fault message). The third sensor (N°2) has to be connected manually at terminal block level. In case of a window-heating fault, the WHC sends an output to the ECAM via the System Data Acquisition Concentrator (SDAC). The WHC also transmits fault messages to the CMC.

G7508471 - G3NT1T0 - FM30D8000000001

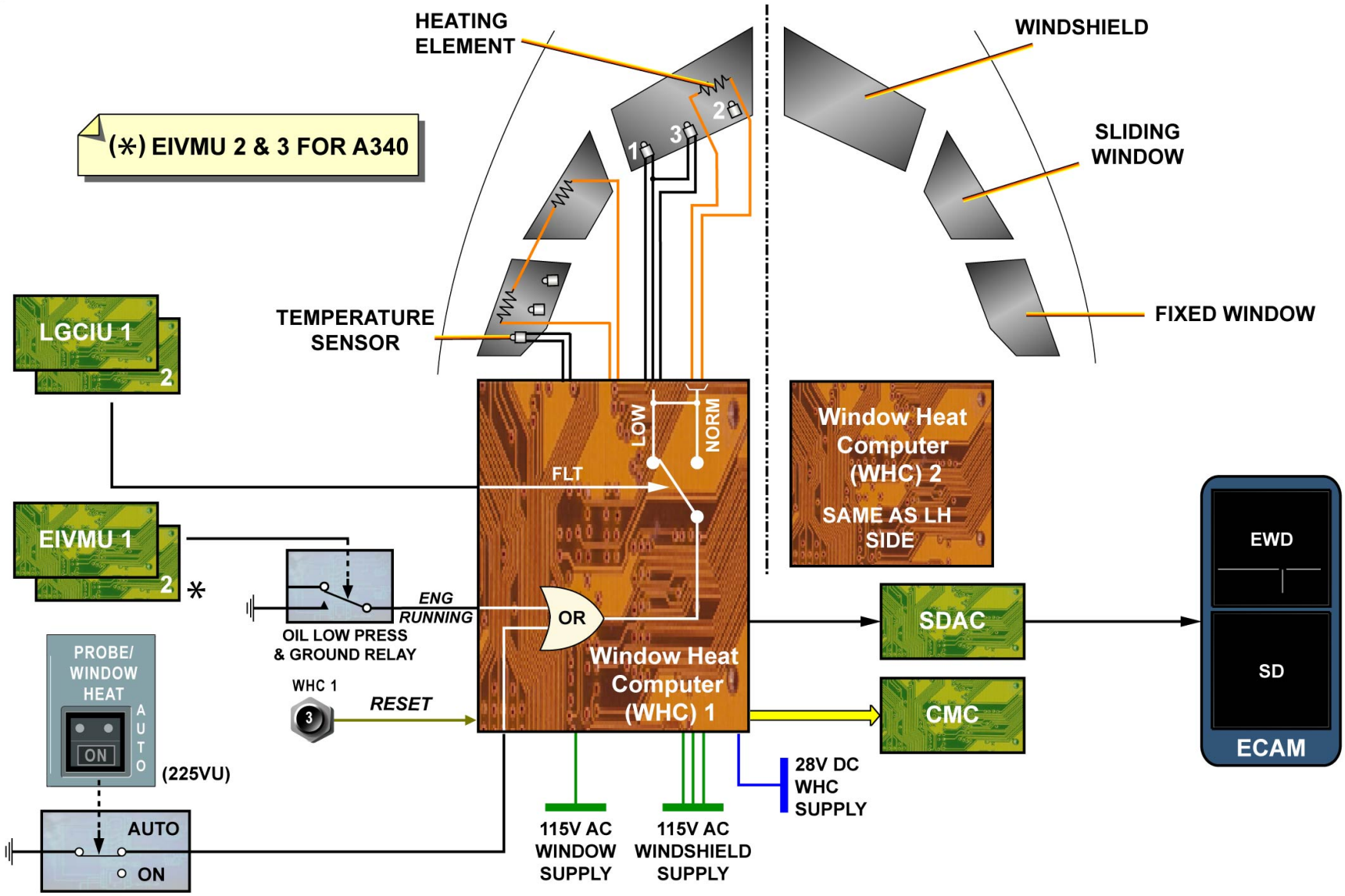

ANTI-ICE AND DEFOGGING CONTROL AND MONITORING

G7508471 - G3NT1T0 - FM30D800000001

WINDSHIELD A.ICE/DEFOGGING & RAIN PROT D/O (3)

ANTI-ICE AND DEFOGGING CONTROL AND MONITORING (continued)

WINDSHIELD SPARE TEMPERATURE SENSOR CONNECTION

Out of the three temperature sensors installed in each windshield, two are permanently connected to the related WHC, sensor 1 and sensor 3. In case of failure of sensor 1, the WHC does an automatic switching to sensor 3, and triggers a class 3 fault messages.
The connection of the third sensor is done at terminal block level, by disconnecting the wiring from pin X and connecting it to pin F.

G7508471 - G3NT1T0 - FM30D800000001

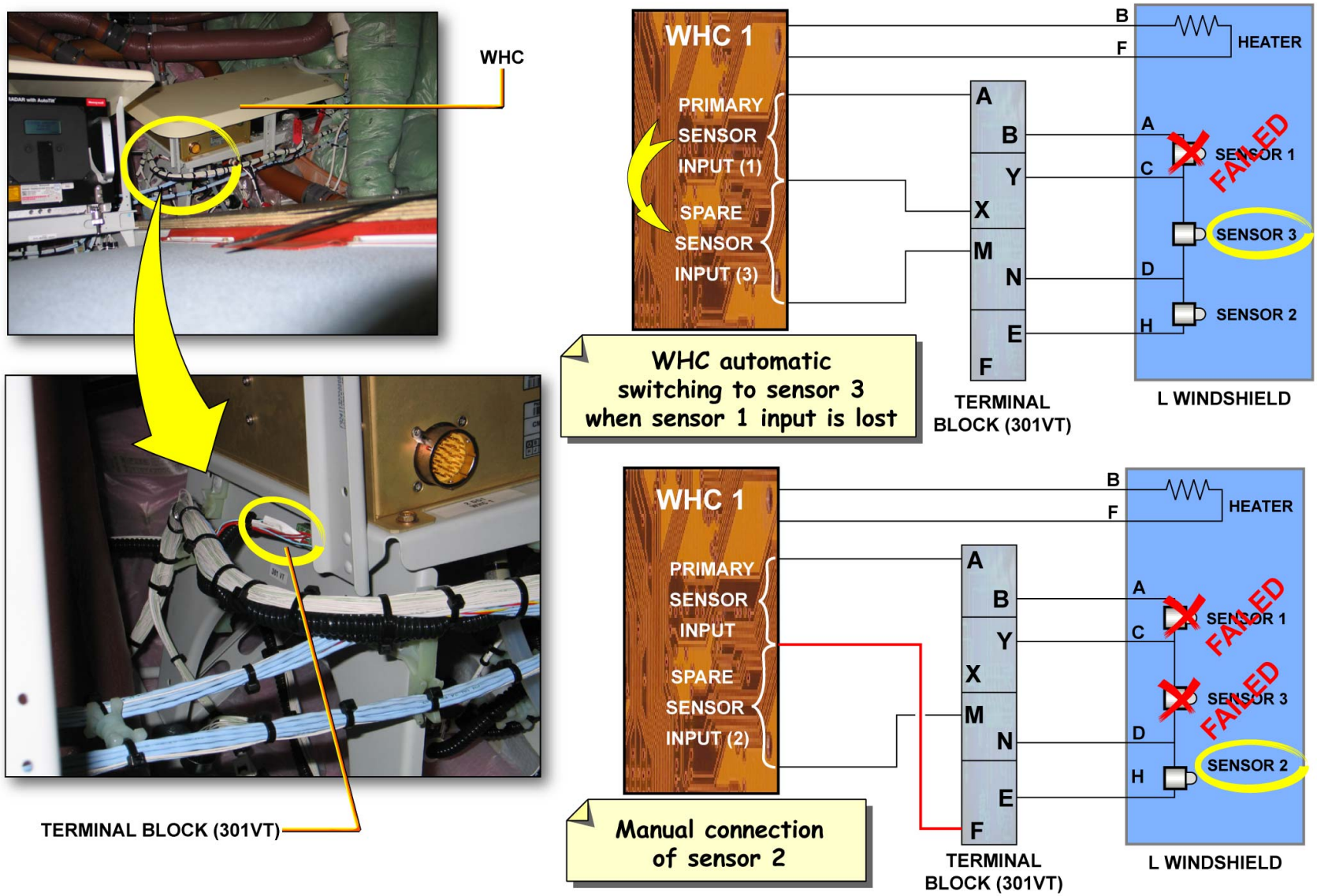

ANTI-ICE AND DEFOGGING CONTROL AND MONITORING - WINDSHIELD SPARE TEMPERATURE SENSOR CONNECTION

G7508471 - G3NT1T0 - FM30D800000001

WINDSHIELD A.ICE/DEFOGGING & RAIN PROT D/O (3)

WIPER SYSTEM

Each wiper is independently actuated by a two-speed electric motor controlled by the WIPER control selector located on the overhead panel. SLOW or FAST speed can be selected. When the selector is set to OFF, the wiper stops in the parking position on the lower part of the windshield and is lifted off the aircraft structure.

G7508471 - G3NT1T0 - FM30D800000001

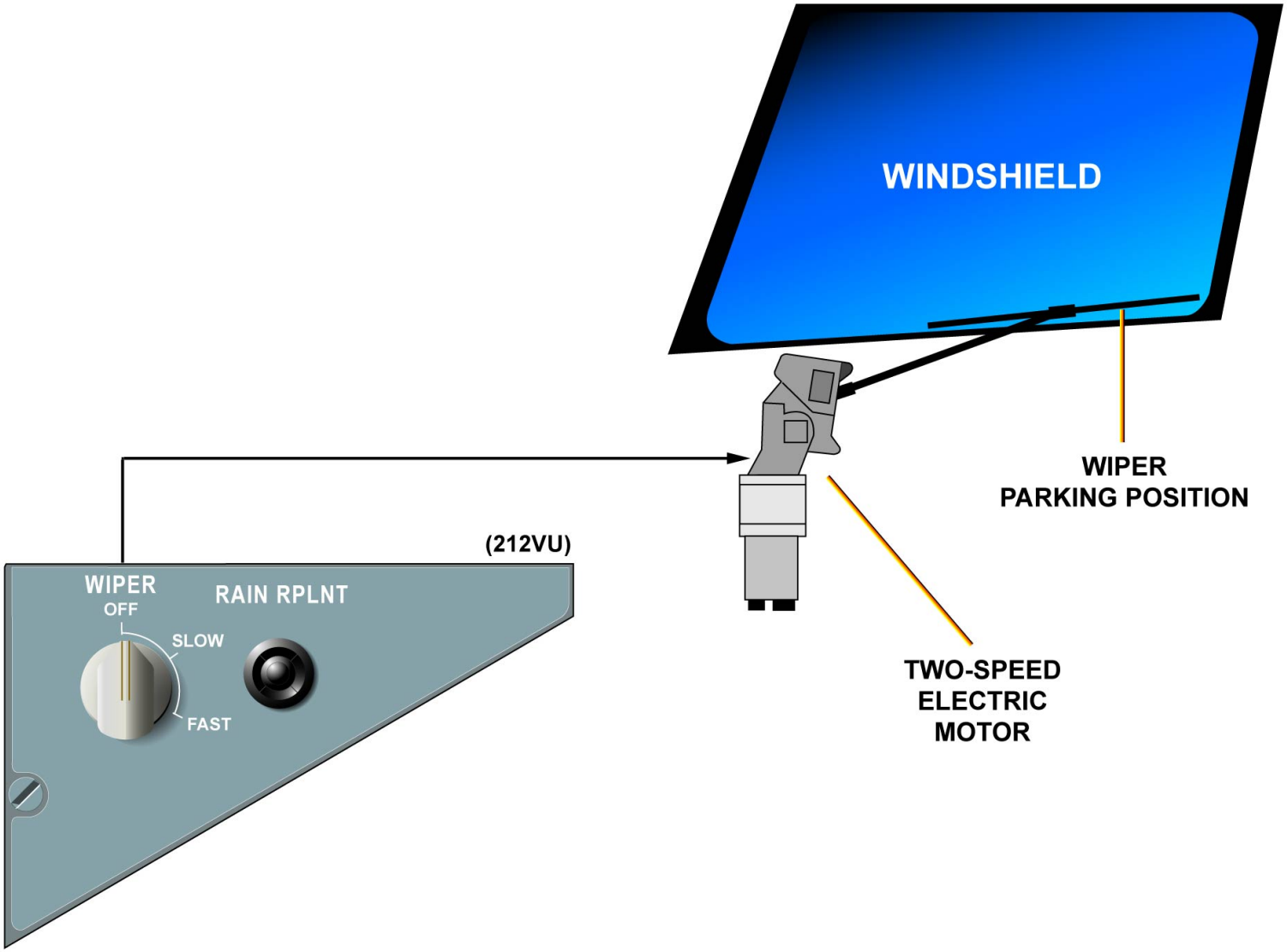

WIPER SYSTEM

G7508471 - G3NT1T0 - FM30D800000001

WINDSHIELD A.ICE/DEFOGGING & RAIN PROT D/O (3)

RAIN REPELLENT SYSTEM

The rain repellent system is composed of a pressurized rain repellent can assembly for storage, a gage assembly for pressure indicating, time controlled solenoid valves, 2 spray nozzles and a blow-out reservoir, which enables the spray nozzles to be purged with hot air.
When the rain repellent P/B is pressed in, the solenoid valve opens for a short time. This causes a measured quantity of rain repellent liquid to be sprayed onto the related windshield. On ground, the rain repellent system is inhibited on the ground when engines are shut down.

G7508471 - G3NT1T0 - FM30D800000001

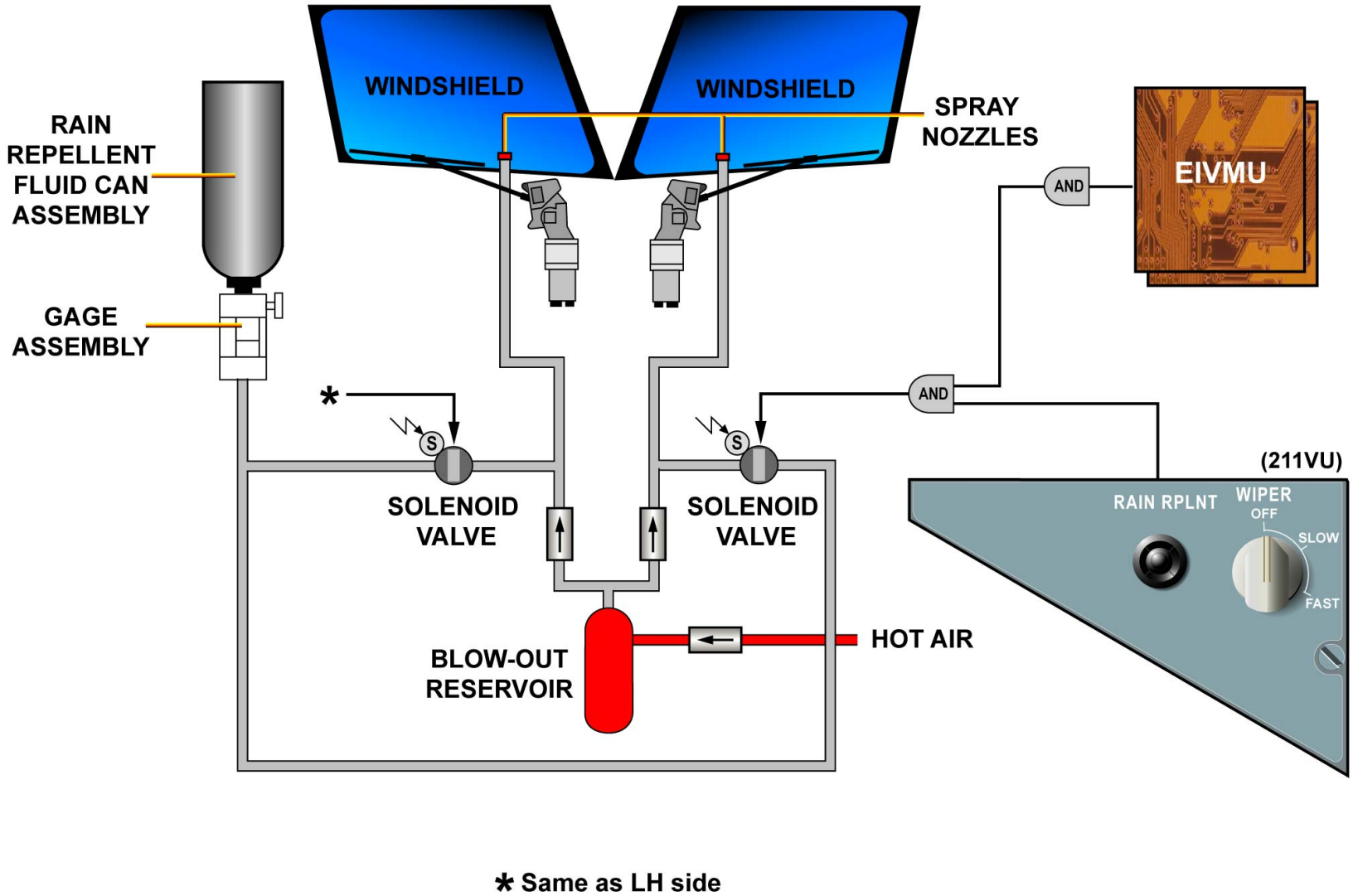

RAIN REPELLENT SYSTEM

G7508471 - G3NT1T0 - FM30D800000001

POTABLE & WASTE WATER ICE PROTECTION D/O (3)

GENERAL

An automatic electrical water ice protection system is installed to prevent ice formation in the water pipes and drain masts in flight or on ground at given freezing temperatures. Two Ice Protection Control Units (IPCUs) control and monitor this system.

G7508471 - G3NT1T0 - FM30D900000001

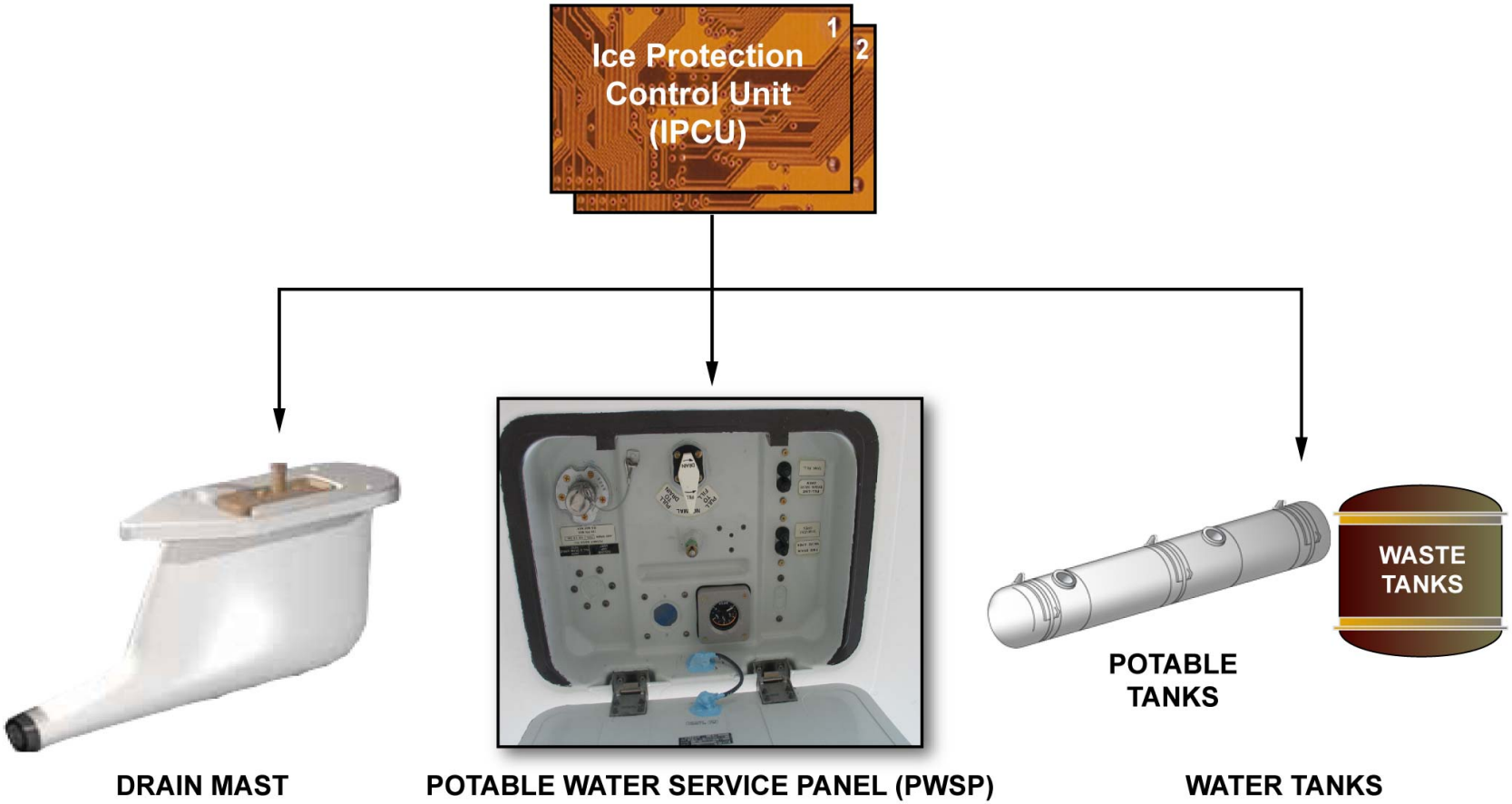

The Potable Water Service Panel (PWSP) is different if 3 tanks are installed.

GENERAL

G7508471 - G3NT1T0 - FM30D900000001

POTABLE & WASTE WATER ICE PROTECTION D/O (3)

ELECTRICAL HEATING ELEMENTS

Electrical heating elements equipped with temperature sensors, are fitted on the following components:
- the water lines,
- the drain masts,
- the Potable Water Service Panel (PWSP) and the valve,
- the waste tank drain tubes and valves,
- the toilet waste lines.

NOTE: A third potable water tank can be installed optionally.

CONTROL

Electrical heating elements are controlled and monitored by two IPCUs. The IPCUs turn the electrical heating on or off depending on information from temperature sensors. Programmable temperature thresholds are stored in the IPCUs. The Water Ice Protection Control Units (WIPDU) are installed on a bracket in the WIP fuse CB box. The WIPDU permit to adjust the individual current threshold depending on the number, length and type of heaters per heating circuit. The Landing Gear Control and Interface Unit (LGCIU) sends a ground/flight signal to the WIPDU to enable heating of the heating circuits, on ground and/or in flight.
A BITE test is performed every 5 minutes by the IPCUs, which transmit the system status to the Cabin Intercommunication Data System (CIDS) and to the Centralized Maintenance System (CMS).

G7508471 - G3NT1T0 - FM30D900000001

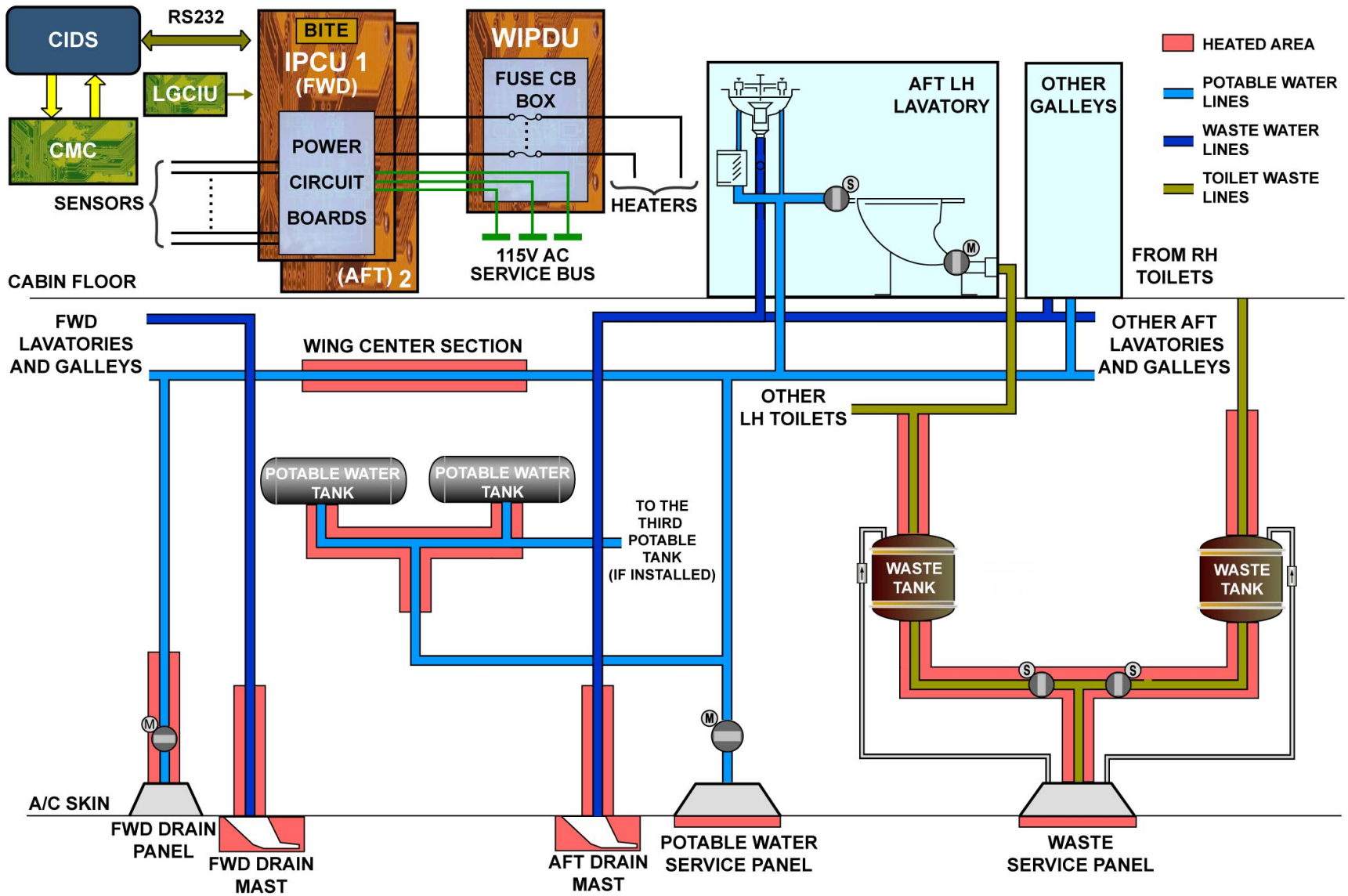

ELECTRICAL HEATING ELEMENTS & CONTROL

G7508471 - G3NT1T0 - FM30D900000001

ESCAPE SLIDE LOCKING MECH. ICE PROT D/O (3)

GENERAL

To make sure that the escape slide locking mechanism can be disarmed at the opening of the door, the system prevents ice formation of condensation water in the Slide Attachment Fittings (SAFs). Each passenger door has two heated SAFs. The overwing-emergency exits (only on the A340-600) have no heated SAFs.
The SAFs lock the escape slide girt-bar to the doorframe structure, when the door-emergency control handle is in the ARMED position. They are installed by the doors sill area of each passenger/crew door. Two Ice Protection Control Units (IPCU 1 and IPCU 2) control and monitor the 16 SAFs. The fwd IPCU controls and monitors the SAFHs of the fwd and middle1 passenger/crew doors LH/RH. The aft IPCU controls and monitors the SAFHs of the middle2 and aft passenger/crew doors LH/RH.

G7508471 - G3NT1T0 - FM30D600000002

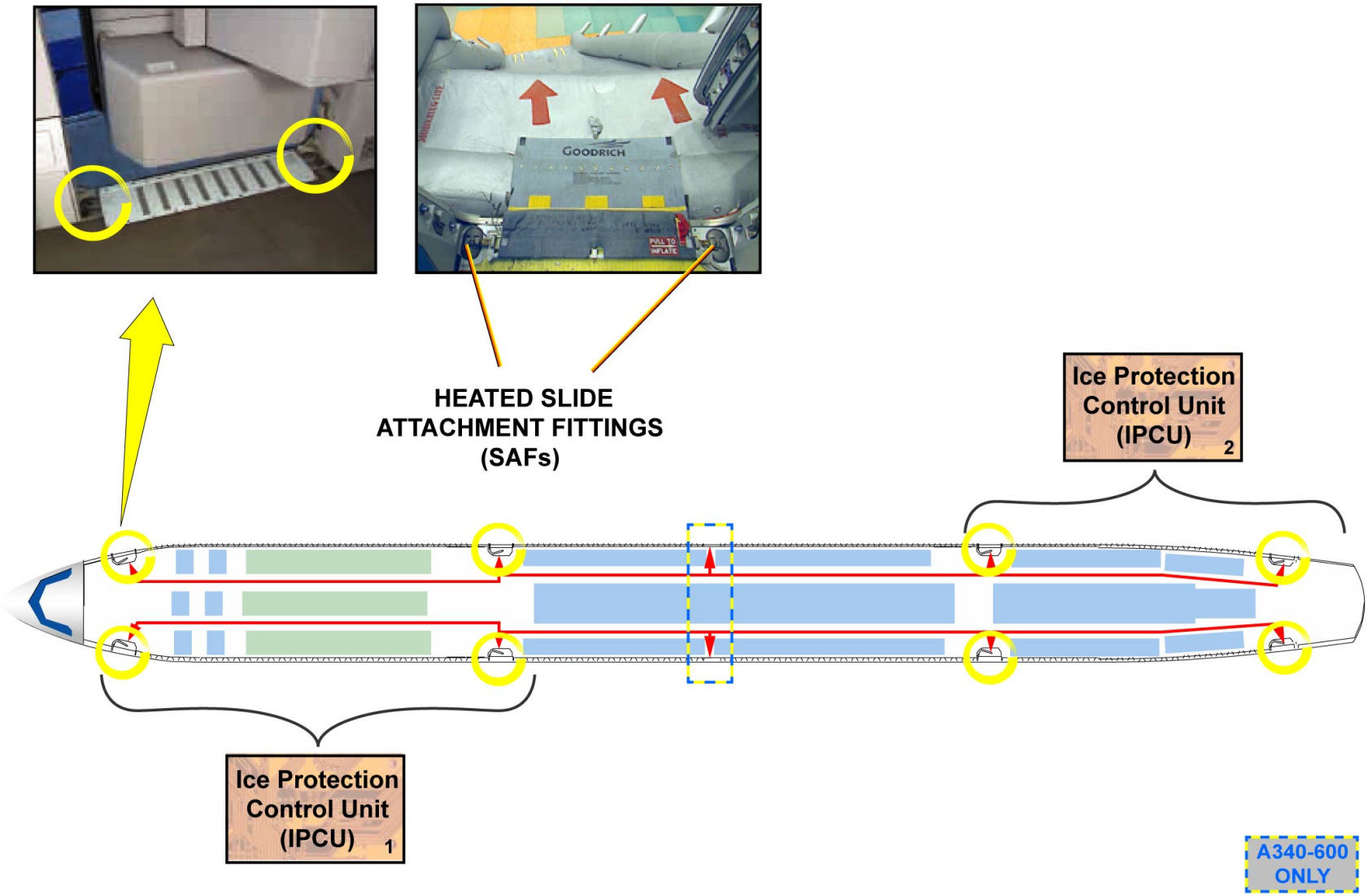

GENERAL

G7508471 - G3NT1T0 - FM30D600000002

ESCAPE SLIDE LOCKING MECH. ICE PROT D/O (3)

DESCRIPTION

The escape slide locking mechanism with the ice protection system is composed of 16 SAFs and 2 IPCUs.

SLIDE ATTACHMENT FITTINGS

One SAF has:
- one electrical heater,
- one temperature sensor,
- one overtemperature switch.

The electrical heater is installed between the bottom of the SAF and the SAF stop plate. The temperature sensor and the overtemperature switch are installed on the lower side of the SAF:
- the temperature sensor is connected to one IPCU. It continuously measures the temperature of the SAF,
- the overtemperature switch protects the heater element in case of a malfunction of the temperature sensor. The cut-off temperature is 80±5°C (176±5°F).

G7508471 - G3NT1T0 - FM30D600000002

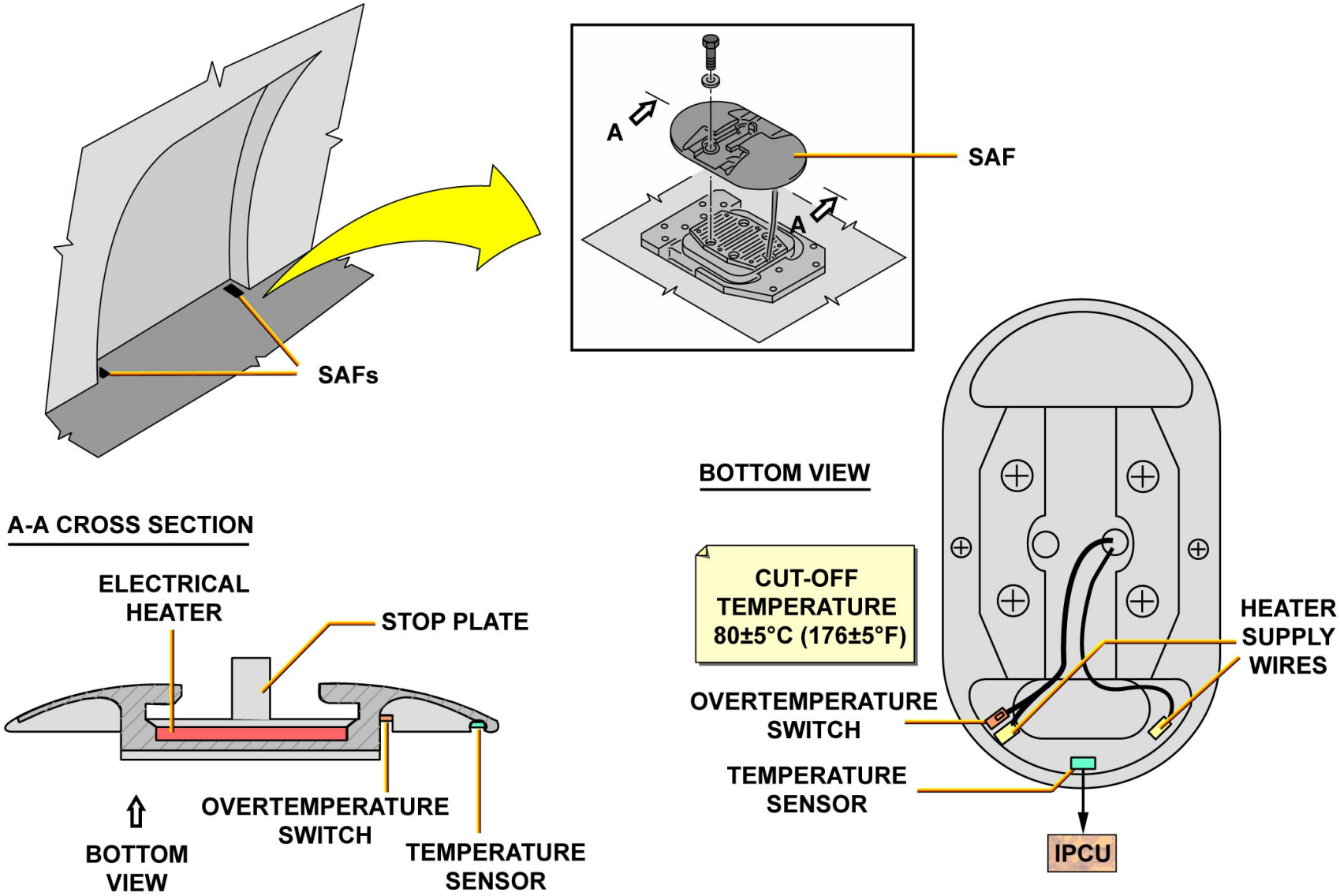

DESCRIPTION - SLIDE ATTACHMENT FITTINGS

G7508471 - G3NT1T0 - FM30D600000002

ESCAPE SLIDE LOCKING MECH. ICE PROT D/O (3)

DESCRIPTION (continued)

IPCU LOCATION

Two IPCUs are installed:
- one on the right hand side of the Avionics Compartment,
- and one on the right hand side of the Aft Cargo Compartment.

G7508471 - G3NT1T0 - FM30D600000002

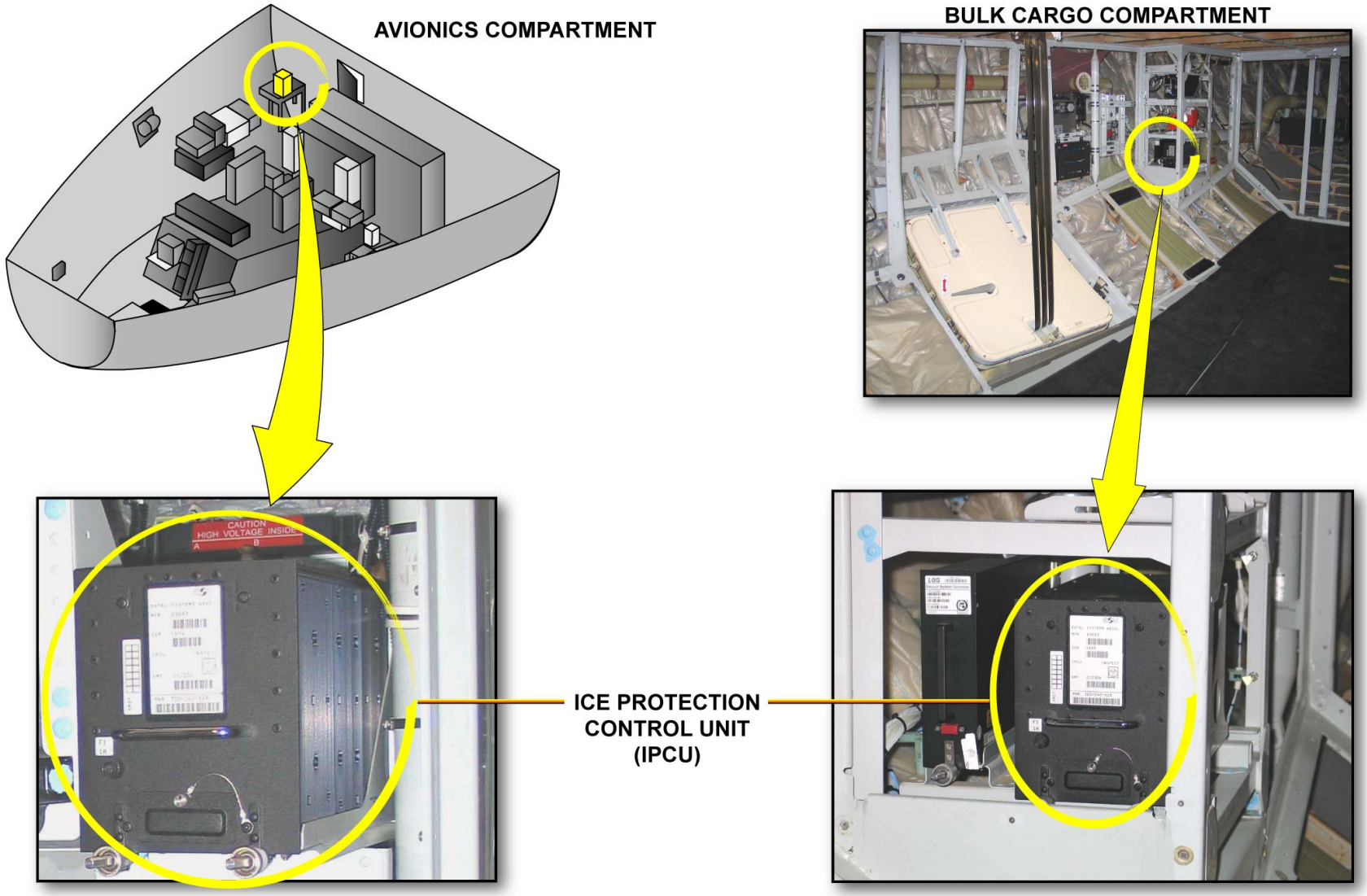

DESCRIPTION - IPCU LOCATION

ESCAPE SLIDE LOCKING MECH. ICE PROT D/O (3)

DESCRIPTION (continued)

IPCU FUNCTIONS

The primary functions of the IPCUs are:
- heating regulation,
- temperature range adjustment (customer option),
- heater and sensor disable/enable test,
- heater current monitoring,
- Cabin Intercommunication Data System (CIDS) interface,
- power-up reset.

G7508471 - G3NT1T0 - FM30D600000002

IPCU FUNCTIONS

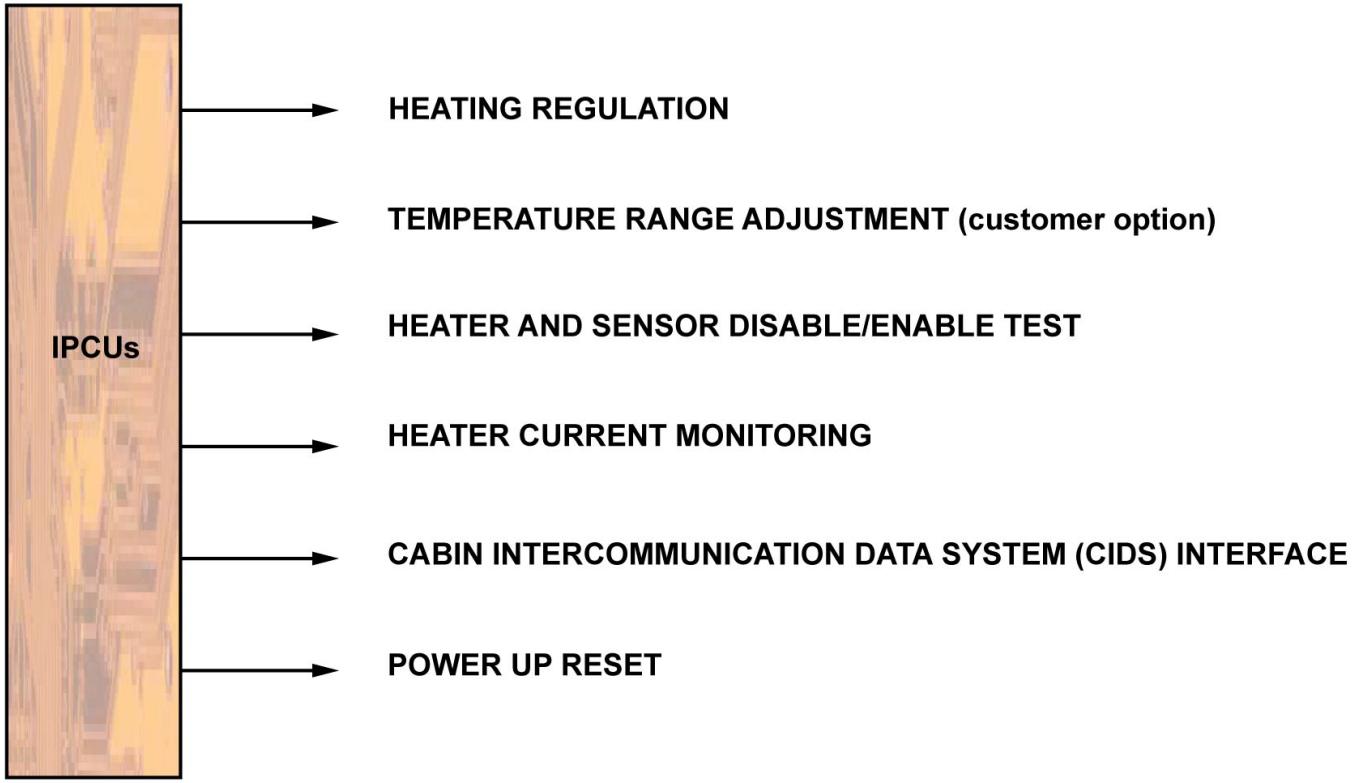

DESCRIPTION - IPCU FUNCTIONS

ESCAPE SLIDE LOCKING MECH. ICE PROT D/O (3)

NORMAL OPERATION

Each IPCU receives a 115 VAC power supply used for operation and heater supply. The Escape Slide Locking Mechanism with the Ice Protection System has an interface with the Door Proximity Switch Control Unit (PSCU) for door and slide arming signal information.
The IPCU controls each door heating SAF by closing the associated power relay when the following conditions are met:
- the associated door is closed and the associated emergency control handle is in the "armed" position (enable signal from PSCU),
- the SAF temperature sensor reads less than 12°C (53.6°F).
When the temperature is higher than 17°C (62.6°F), the IPCU switches the heating off.

MONITORING

Each IPCU can be tested either automatically every five minutes or manually from the MCDU through the CIDS GROUND SCANNING page. Each heater element electrical current is monitored by its associated IPCU for status fault detection. If a fault is detected, a fault message is displayed on the FAP, and a class 3 fault message is triggered identifying the faulty SAF.

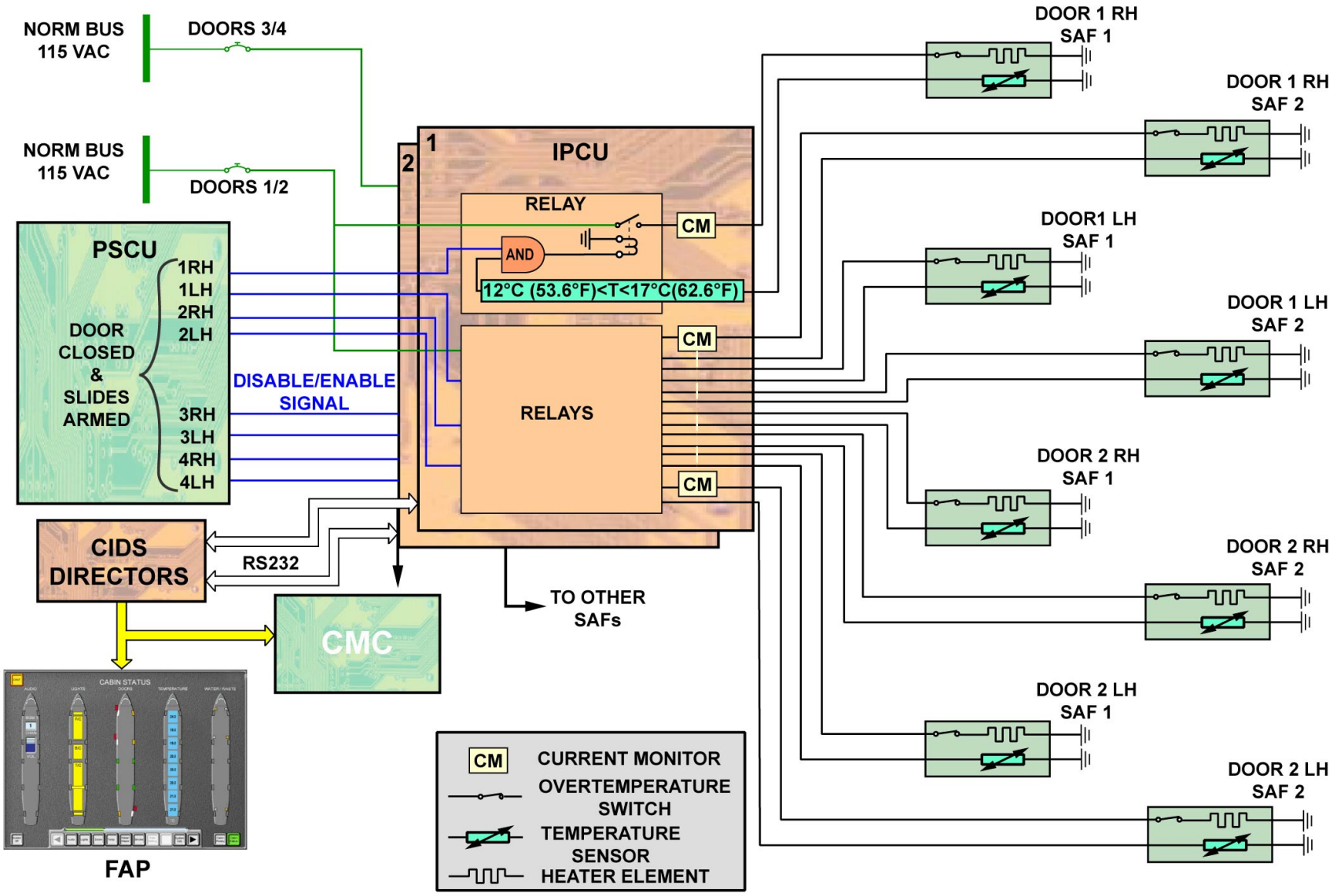

NORMAL OPERATION - MONITORING

G7508471 - G3NT1T0 - FM30D600000002

ICE DETECTION D/O (3)

GENERAL

The purpose of the ice detection system is to provide better detection of icing conditions and fuel saving by cutting off the anti ice system when it is no longer necessary. Two ice detectors are installed on the fuselage in front of the nose gear. A visual detection system informs the crew that icing conditions are encountered, by accretion of ice on a visual lighted indicator.

G7508471 - G3NT1T0 - FM30DA000000001

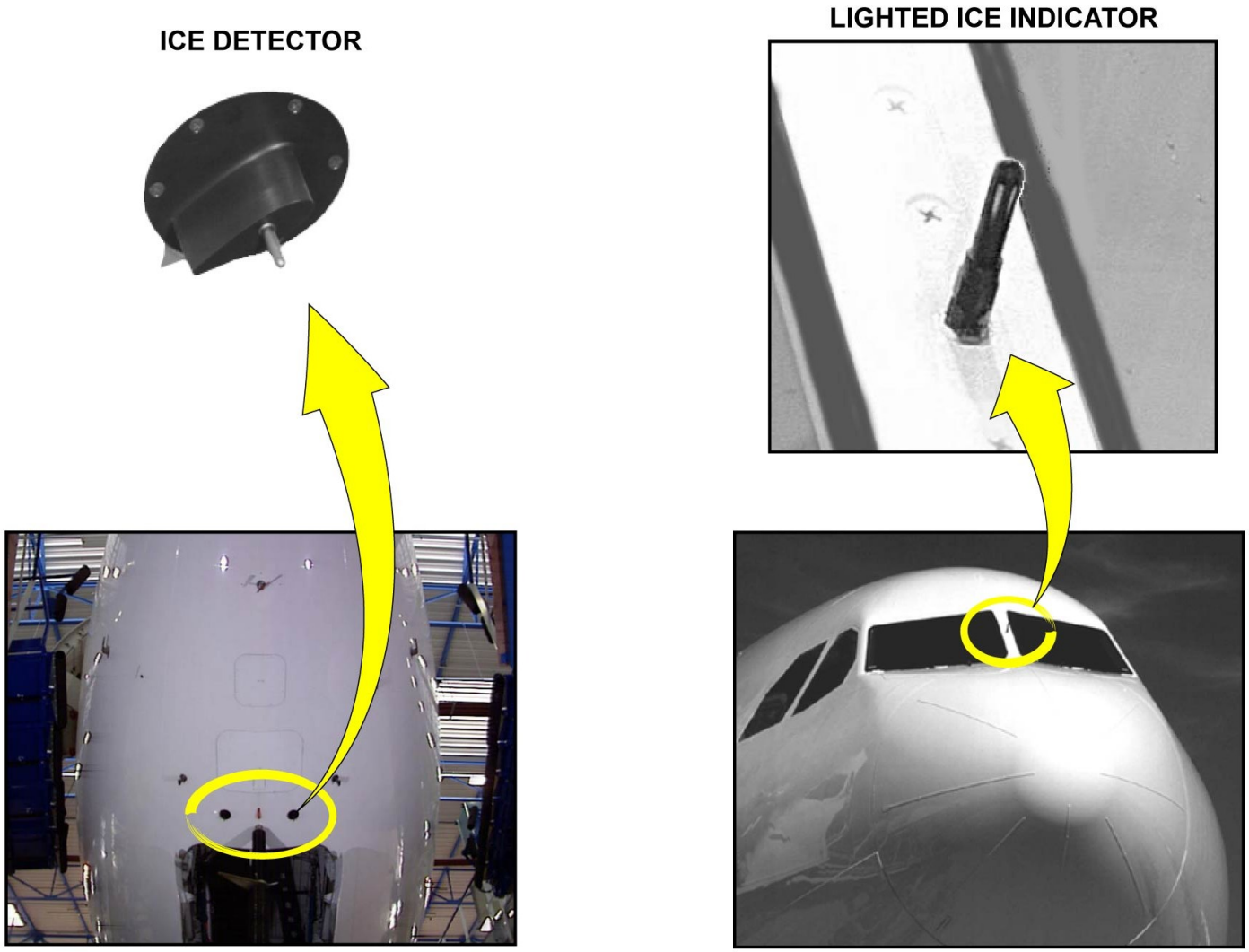

GENERAL

ICE DETECTION D/O (3)

OPERATION

The sensing probe of the ice detector is driven to vibrate at its resonant frequency of 40 KHz. Then, the weight of the accreted ice causes the frequency to decrease.
The frequency drop caused by 0.508 plus or minus 0.127 mm of ice is considered as the detection trip point. When the trip point is reached, the probe is de-iced by means of internal heaters to prepare for subsequent detections.
The ice detection system is directly connected to the Flight Warning Computer (FWC) to send warning messages to the crew on the EWD.
The ice detection system operates at electrical power-up. It sends warnings in flight above 1500 ft and when the Total Air Temperature (TAT) is below 8 degrees Celsius. The system is inhibited on ground.

INDICATION AND MONITORING

There are two levels of indication: ICE DETECTED corresponding to an elementary detection and SEVERE ICE DETECTED corresponding to 7 elementary detections. These two levels are displayed on the EWD.
The ENG A. ICE and WING A. ICE messages are displayed in green on the MEMO item of the EWD when the corresponding valves are open.
These indications are pulsing when:
- the engine or wing anti ice has been selected on
- no icing conditions have been detected by the ice detectors for 190 seconds
- one ice detector FAULT signal at least, is correct.

Each ice detector is equipped with a BITE function for continuous monitoring. A fault signal is displayed when the two ice detectors are faulty. Fault signals are sent to the System Data Acquisition Concentrator (SDAC) and to the Central Maintenance Computer (CMC).

G7508471 - G3NT1T0 - FM30DA000000001

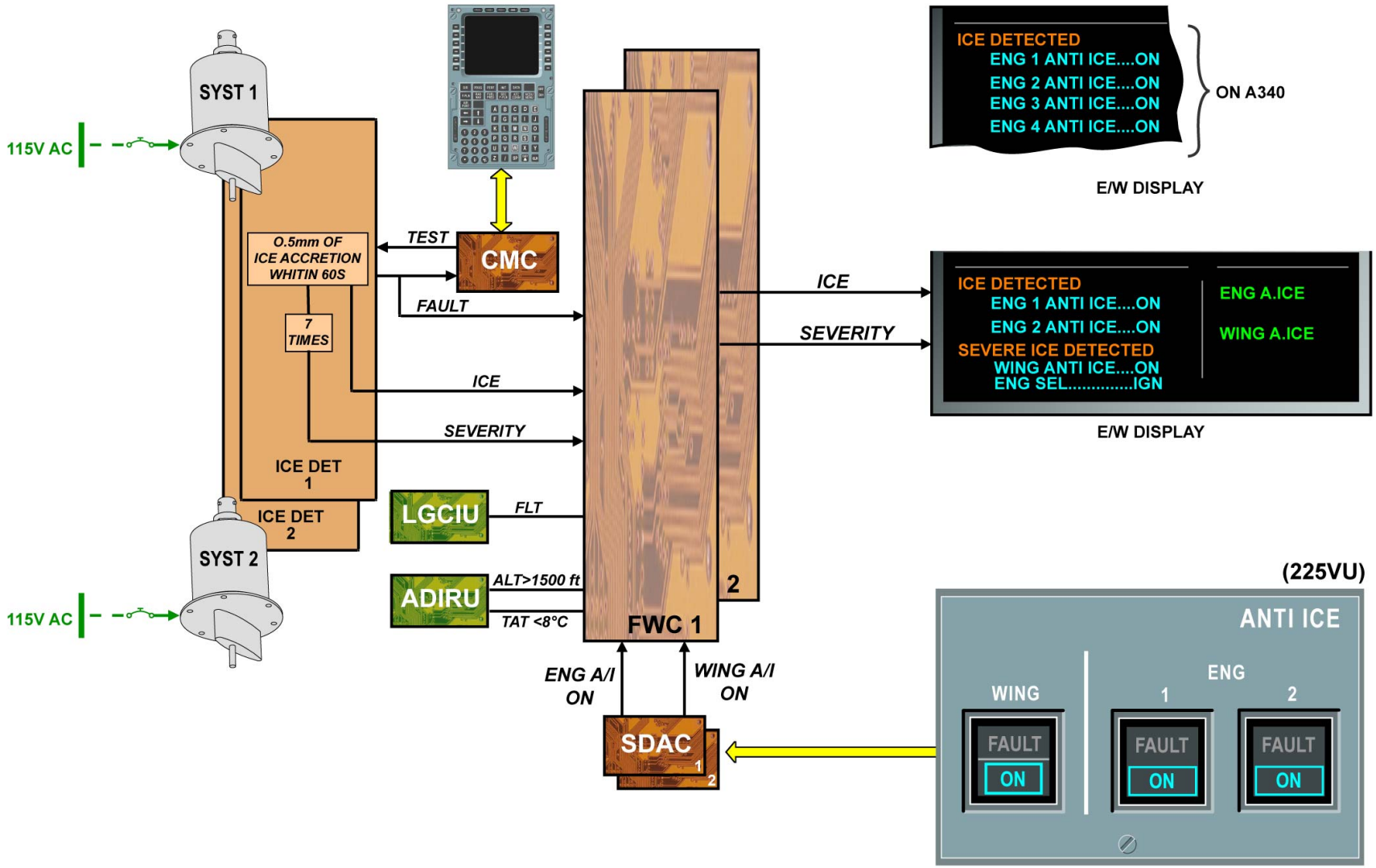

OPERATION & INDICATION AND MONITORING

ICE DETECTION D/O (3)

VISUAL LIGHT INDICATOR

The ICE IND AND STBY COMPASS switch controls the illumination of the lighted icing indicator.

G7508471 - G3NT1T0 - FM30DA000000001

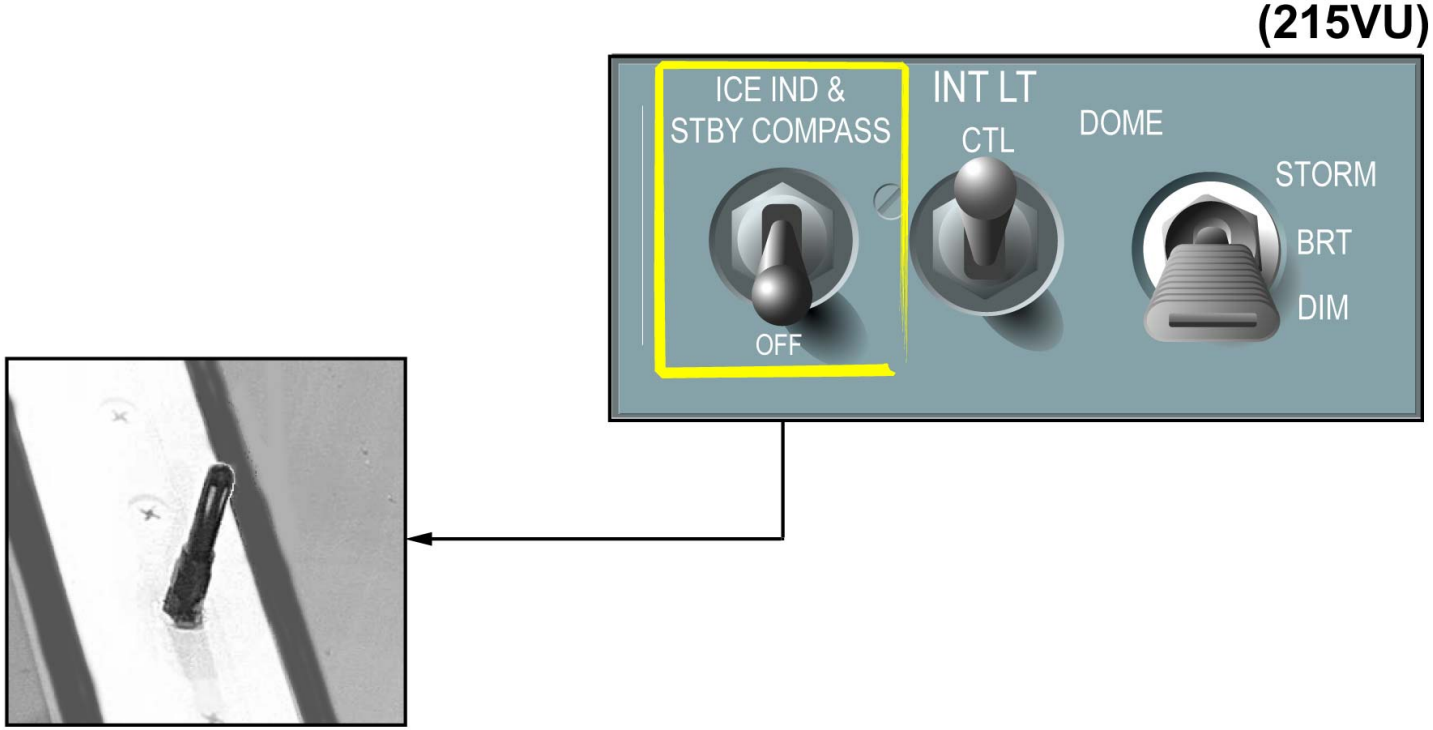

VISUAL LIGHT INDICATOR

G7508471 - G3NT1T0 - FM30DA000000001

ICE & RAIN PROTECTION SYSTEM BASE MAINTENANCE (3)

INTRODUCTION

One base servicing procedure is described in this module. This task concerns the adjustment of the Water Ice Protection Data Unit (WIPDU) coding switches and "enable micro switches" following the components replacement.
This task is accomplished to set the WIDPU in function of the A/C heating circuits configuration.

ADJUSTMENT OF THE WIPDU CODING SWITCHES AND "ENABLE MICRO SWITCHES"

There are two WIPDUs by A/C: one is located in the avionic bay, the other in the aft cargo compartment. As the AMM procedure is the same for the FWD WIPDU setting and the aft WIPDU setting, the FWD WIPDU procedure is chosen for example.
Do a visual inspection of the component interface and the adjacent area.
The WIPDU is a removable Printed Circuit Board (PCB) fitted next to the Water Ice Protection fuse C/B box (WIP fuse C/B box).
Pull the WIPDU after screws removal.
Set the coding switches and "enable micro switches" according to the A/C heating circuits configuration and heating requirements.

NOTE: The displayed values are chosen for example. Each position of the coding switch corresponds to an intensity value.

Install the WIPDU next to the WIP fuse C/B box and make sure the area is clean.

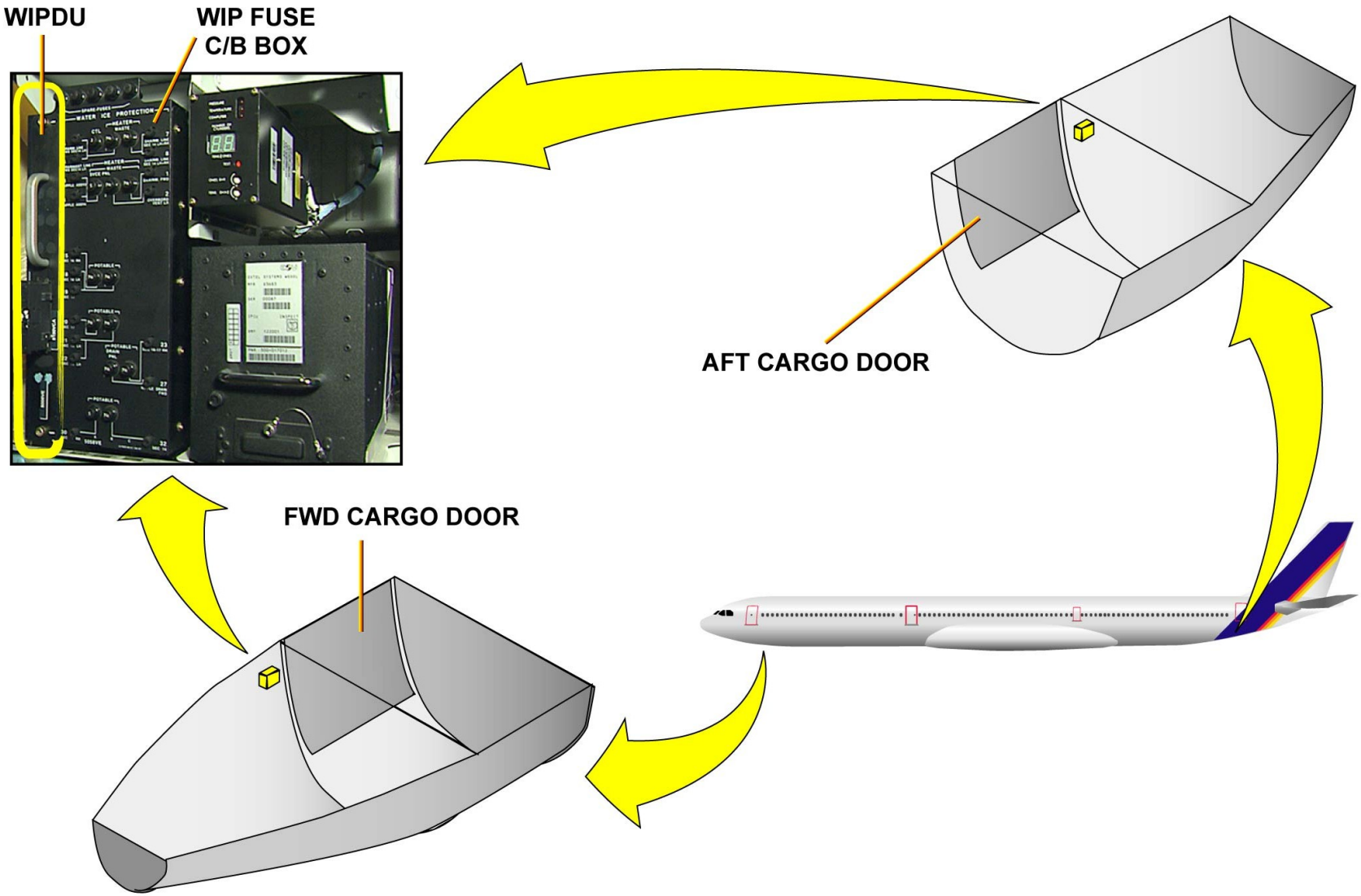

INTRODUCTION & ADJUSTMENT OF THE WIPDU CODING SWITCHES AND "ENABLE MICRO SWITCHES"

Adjustment of the WIPDU coding switches and "enable micro switches":

...
Job set-up
...
Do a visual inspection.
...
Procedure
...
Adjustment of the WIPDU.
...
Close-up
...

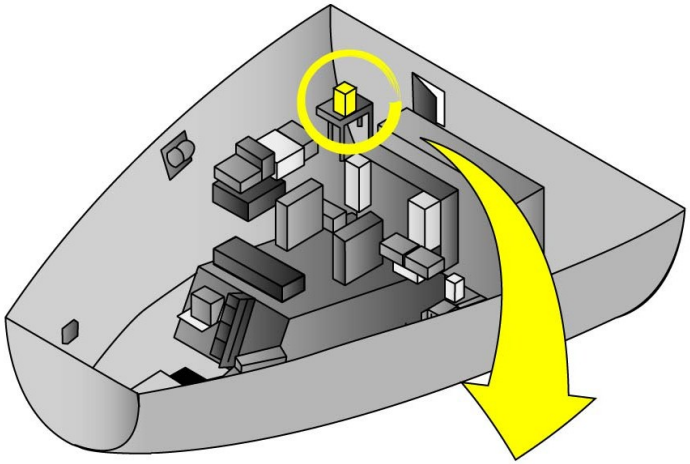

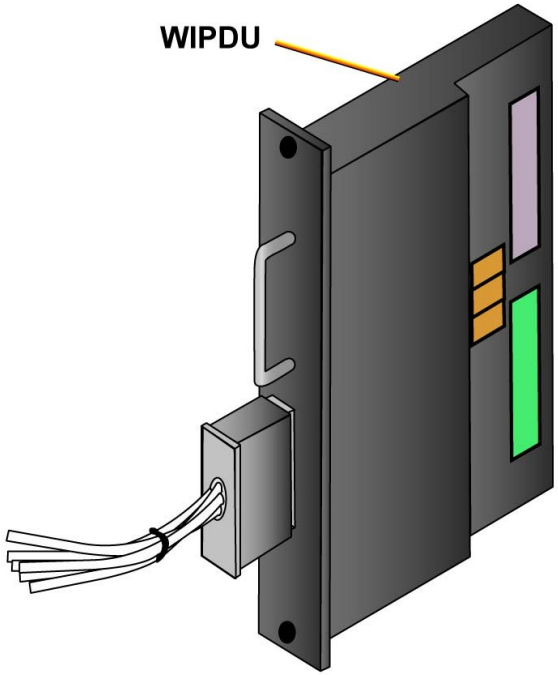

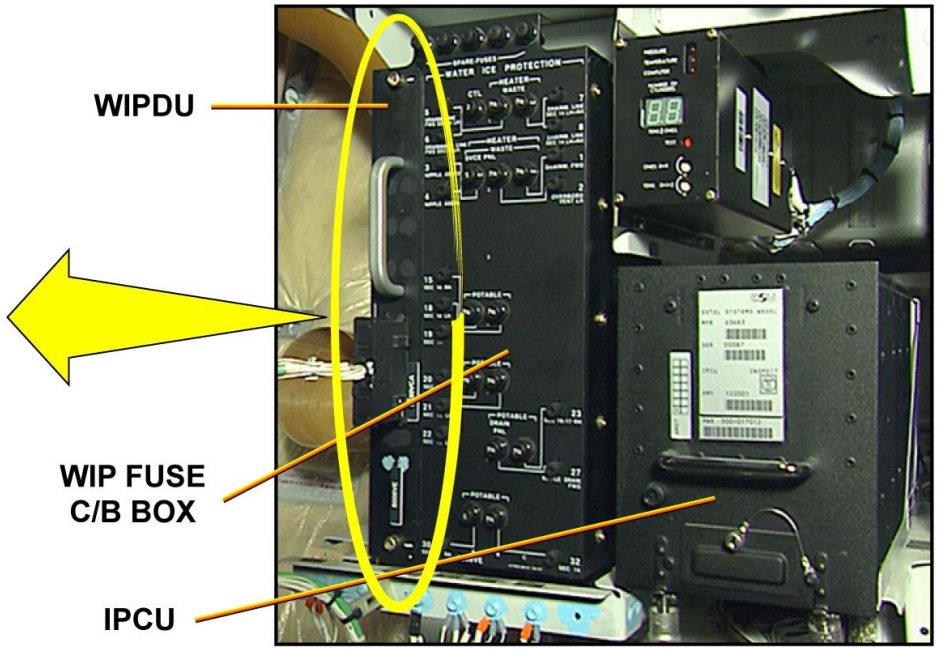

INTRODUCTION & ADJUSTMENT OF THE WIPDU CODING SWITCHES AND "ENABLE MICRO SWITCHES"

Adjustment of the WIPDU coding switches and "enable micro switches":

...
Job set-up
...

Do a visual inspection.

...
Procedure
...

Adjustment of the WIPDU:
- Pull the WIPDU drawer.
- Adjust the coding switches and "enable micro switches".

...
Close-up
...

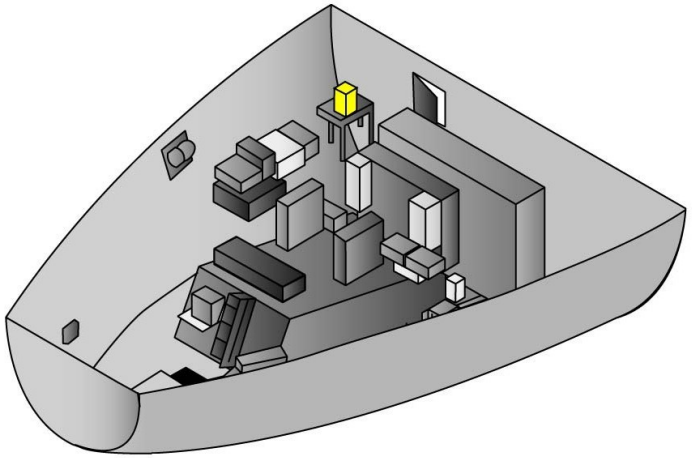

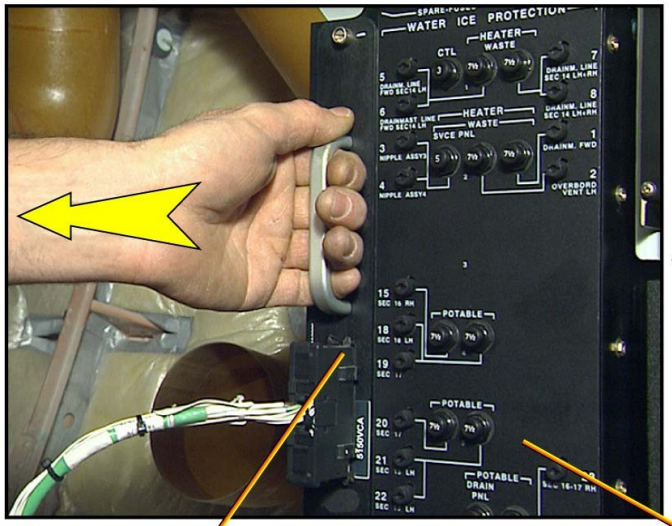

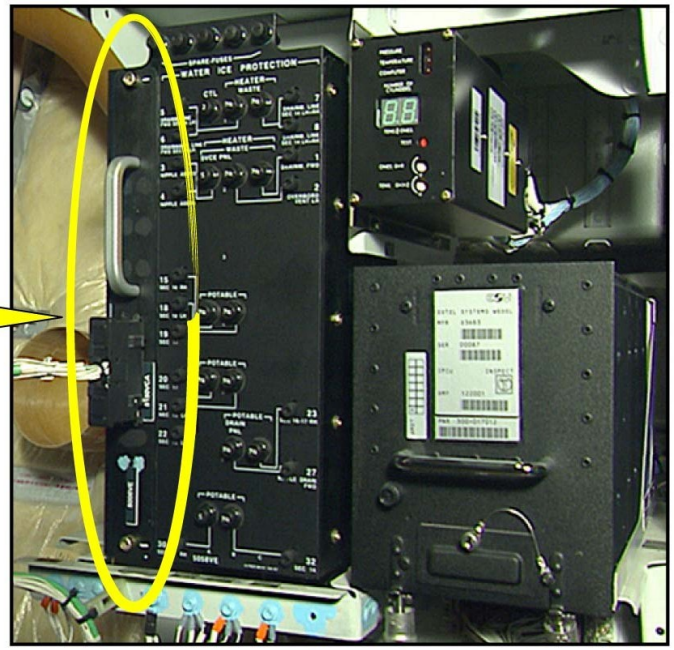

INTRODUCTION & ADJUSTMENT OF THE WIPDU CODING SWITCHES AND "ENABLE MICRO SWITCHES"

Adjustment of the WIPDU coding switches and "enable micro switches":

...
Job set-up
...

Do a visual inspection.

...
Procedure
...

Adjustment of the WIPDU:
- Pull the WIPDU drawer.
- Adjust the coding switches and "enable micro switches".

...
Close-up
...

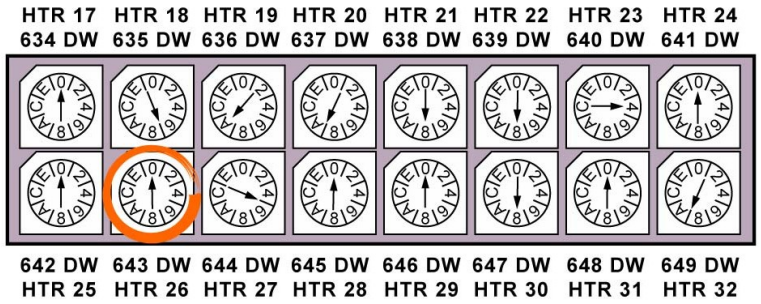

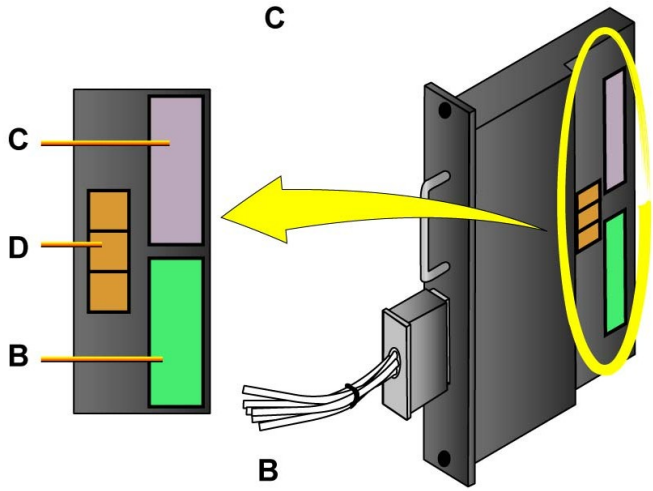

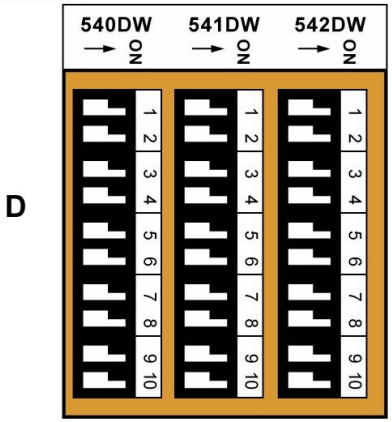

POSSIBLE SWITCH POSITION

SWITCH SETTINGS

0	NO HEATER
1	100 mA
2	200 mA
3	300 mA
4	400 mA
5	500 mA
6	600 mA
7	700 mA
8	800 mA
9	900 mA
A	1000 mA
B	1200 mA
C	1400 mA
D	1600 mA
E	1800 mA
F	2000 mA

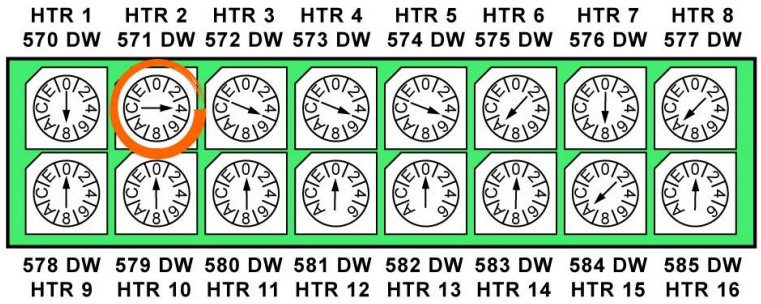

INTRODUCTION & ADJUSTMENT OF THE WIPDU CODING SWITCHES AND "ENABLE MICRO SWITCHES"

G7508471 - G3NT1T0 - FM30Y2BASEMCE02

Adjustment of the WIPDU coding switches and "enable micro switches":

...
✓ Job set-up
...
✓ Do a visual inspection.
...
✓ Procedure
...
✓ Adjustment of the WIPDU.
...
✓ Close-up
...

TASK COMPLETED

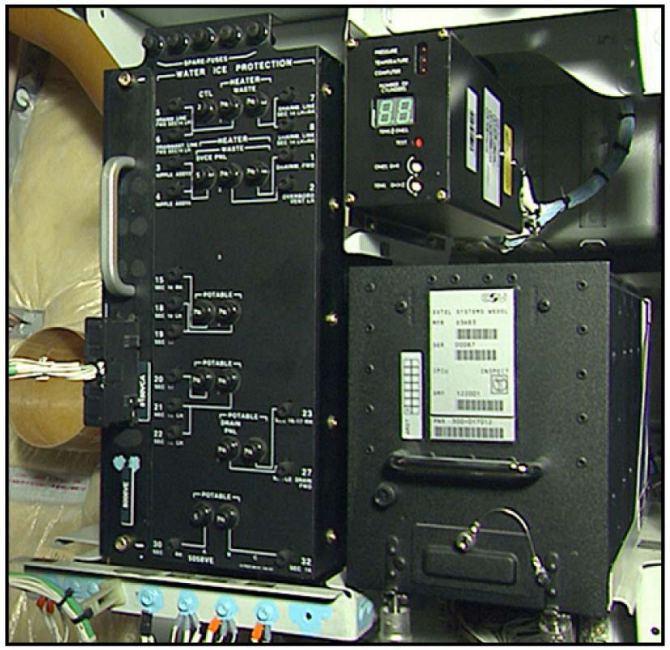

INTRODUCTION & ADJUSTMENT OF THE WIPDU CODING SWITCHES AND "ENABLE MICRO SWITCHES"

AIRBUS S.A.S.
31707 BLAGNAC cedex, FRANCE
STM
REFERENCE G7508471
NOVEMBER 2008
PRINTED IN FRANCE
AIRBUS S.A.S. 2008
ALL RIGHTS RESERVED

AN EADS COMPANY

A330-200/300
TECHNICAL TRAINING MANUAL
MAINTENANCE COURSE - T1 (LVL 2&3) (RR Trent 700)
E EFIS/ECAM and INSTRUMENTS

This document must be used for training purposes only

Under no circumstances should this document be used as a reference

It will not be updated.

All rights reserved
No part of this manual may be reproduced in any form,
by photostat, microfilm, retrieval system, or any other means,
without the prior written permission of AIRBUS S.A.S.

AIRBUS Environmental Recommendation
Please consider your environmental responsability before printing this document.

E EFIS/ECAM AND INSTRUMENTS

Indicating System Line Maintenance Briefing (2) 2

EIS

EIS General Description (3) 16
EIS ECAM Normal & Manual Mode General Desc. (3) 38
EIS ECAM Advisory & Failure Mode Description (3) 52
EIS D/O (3) 80
EIS Abnormal Operation (3) 98

MAINTENANCE PRACTICE

Indicating Systems Line Maintenance (2) 120

INDICATING SYSTEM LINE MAINTENANCE BRIEFING (2)

INDICATING SYSTEM - OVERVIEW

EIS

The EIS shows data to the pilots on six identical and interchangeable Liquid Crystal Display (LCD) units. This EIS is divided into 2 parts:
- the Electronic Flight Instrument System (EFIS) composed of two Primary Flight Displays (PFDs) and two Navigation Displays (NDs),
- the Electronic Centralized Aircraft Monitoring (ECAM) composed of an Engine/Warning Display (EWD) a System Display (SD) and attention getters.

G7508471 - G3NT1T0 - FM31B1000000001

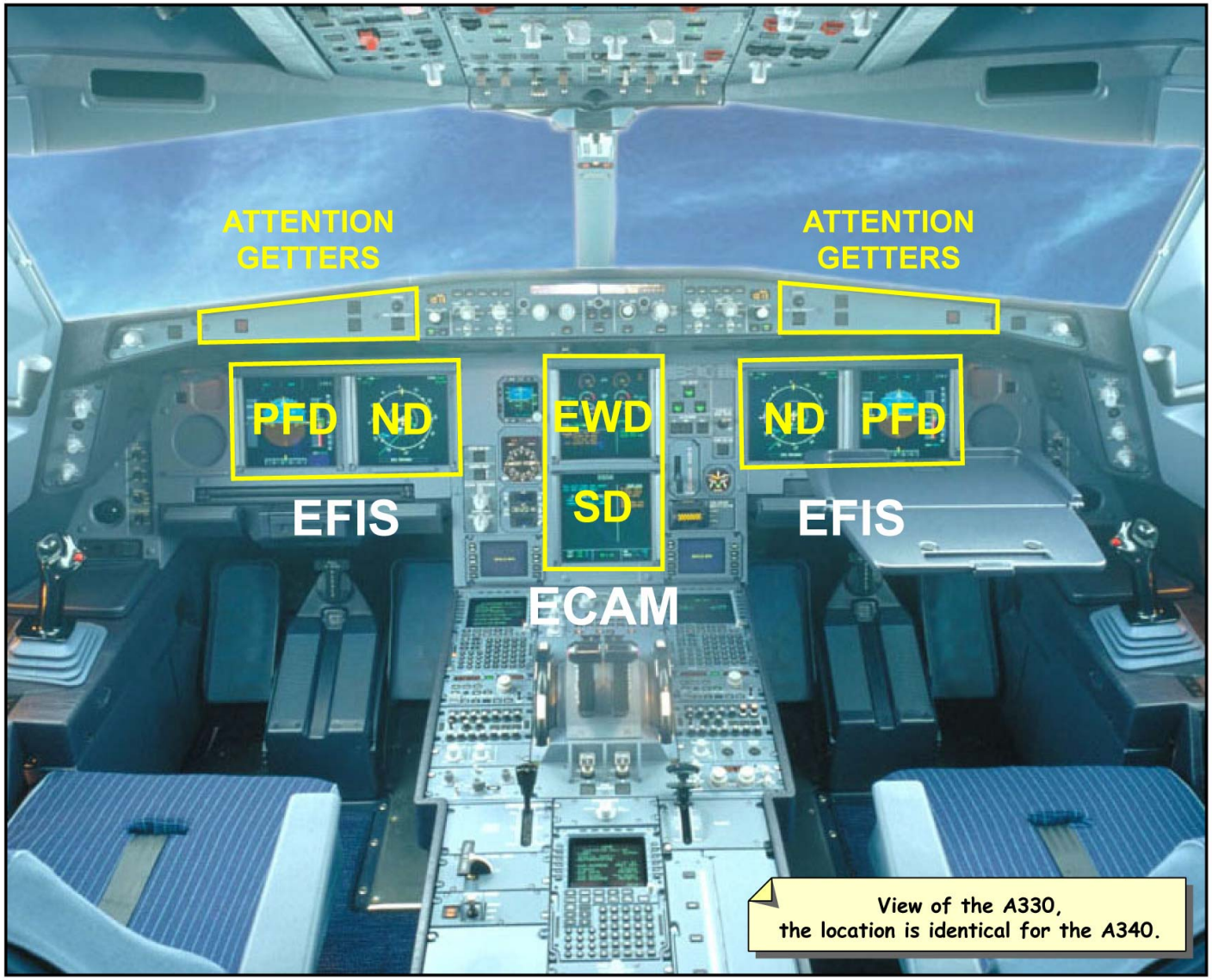

INDICATING SYSTEM - OVERVIEW - EIS

INDICATING SYSTEM LINE MAINTENANCE BRIEFING (2)

INDICATING SYSTEM - OVERVIEW (continued)

PHILOSOPHY

The EIS is an avionics system connected to most of the aircraft systems to fulfill the EFIS and ECAM functions. The EIS comprises 7 computers:
- 3 identical and interchangeable Display Management Computers (DMCs),
- 2 identical and interchangeable Flight Warning Computers (FWCs),
- 2 identical and interchangeable System Data Acquisition Concentrators (SDACs).

The 6 LCD units have the capability to compute and generate symbols to display from data, sent by the DMCs. On the A340-500 and A340-600 aircraft, it is also possible to display video image.

G7508471 - G3NT1T0 - FM31B1000000001

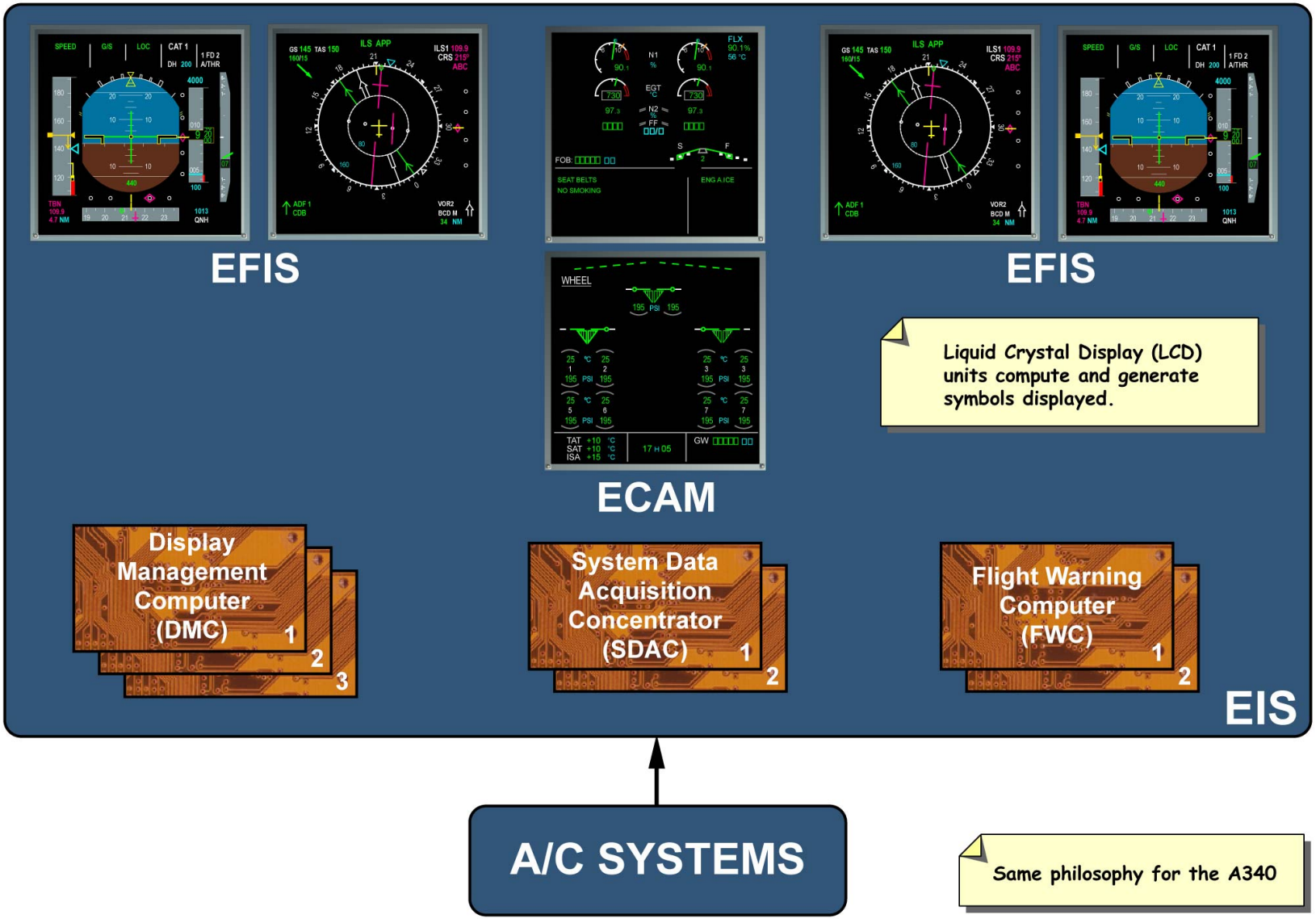

Same philosophy for the A340

INDICATING SYSTEM - OVERVIEW - PHILOSOPHY

G7508471 - G3NT1T0 - FM31B1000000001

INDICATING SYSTEM LINE MAINTENANCE BRIEFING (2)

CLOCK

GENERAL

The clock normally displays the Universal Time Coordinated (UTC) from a clock internal time base unit .The time and date are displayed in digital format by two digits for the hours and months, two digits for the minute and days and two digits for the seconds and years. Normally the time is displayed by default. The clock can also display the date. By pushing the SET button when the time is displayed, the date will be displayed. By pushing the SET button again, the time will be displayed again. The UTC selector enables the clock to be synchronized on the GPS signal or INT to run on its internal time base.

G7508471 - G3NT1T0 - FM31B1000000001

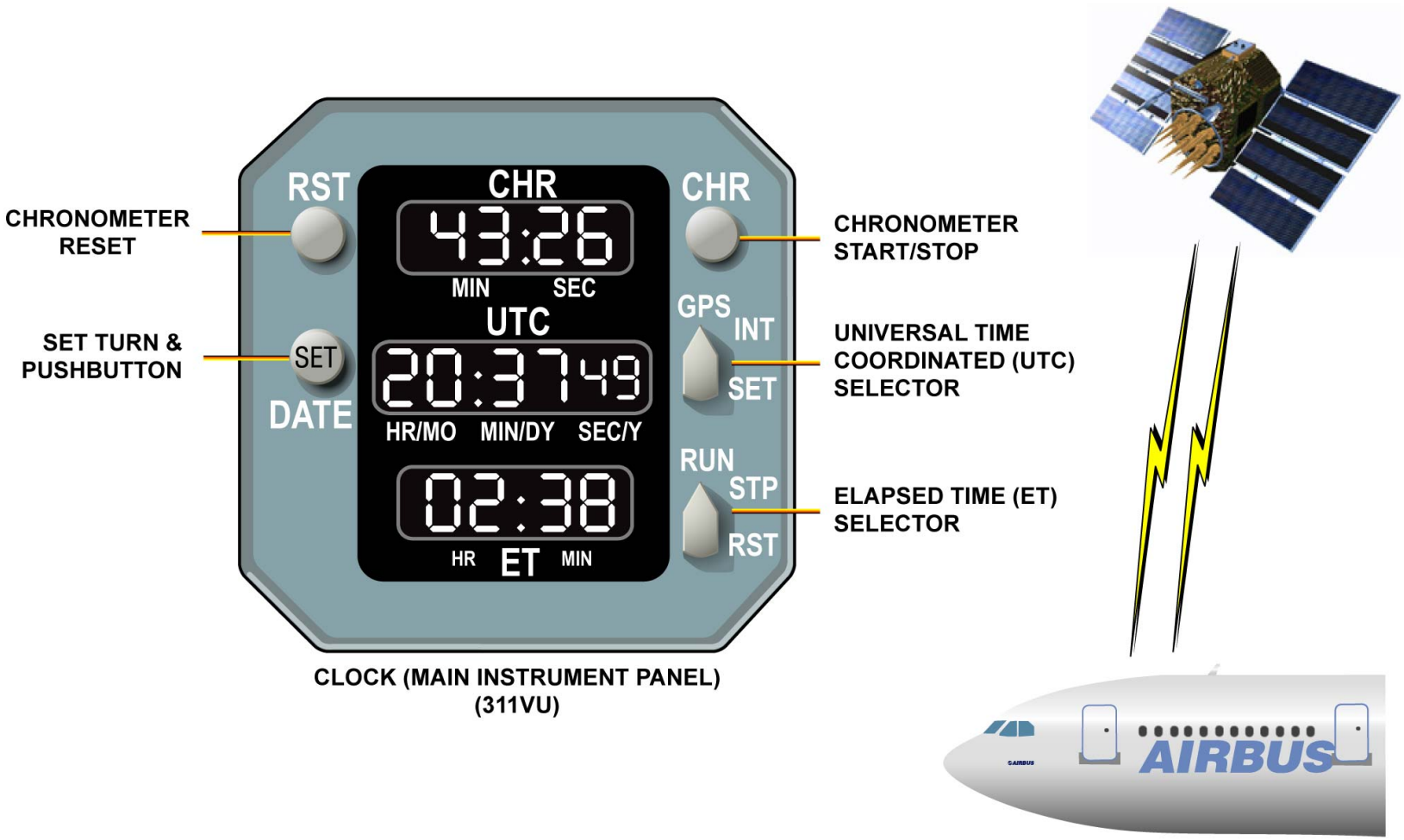

CLOCK (MAIN INSTRUMENT PANEL) (311VU)

CLOCK - GENERAL

INDICATING SYSTEM LINE MAINTENANCE BRIEFING (2)

CLOCK (continued)

CLOCK INTERFACES

The electrical clock is located on the main instrument panel. The electrical clock gives UTC via an ARINC 429 format to the:
- Central Maintenance Computers (CMCs) for failure message report definition on the MCDU,
- Flight Data Interface and Management Unit (FDIMU) for recording system and monitoring system,
- Flight Management, Guidance and Envelope Computers (FMGECs) for their memory access synchronization,
- Air Traffic Service Unit (ATSU) for the Air Traffic and Information Management System (ATIMS) synchronization with the GPS.

The electrical clock receives information from the Multi-Mode Receiver (MMR), via an ARINC 429 bus, synchronizing it with GPS time from satellite.

G7508471 - G3NT1T0 - FM31B1000000001

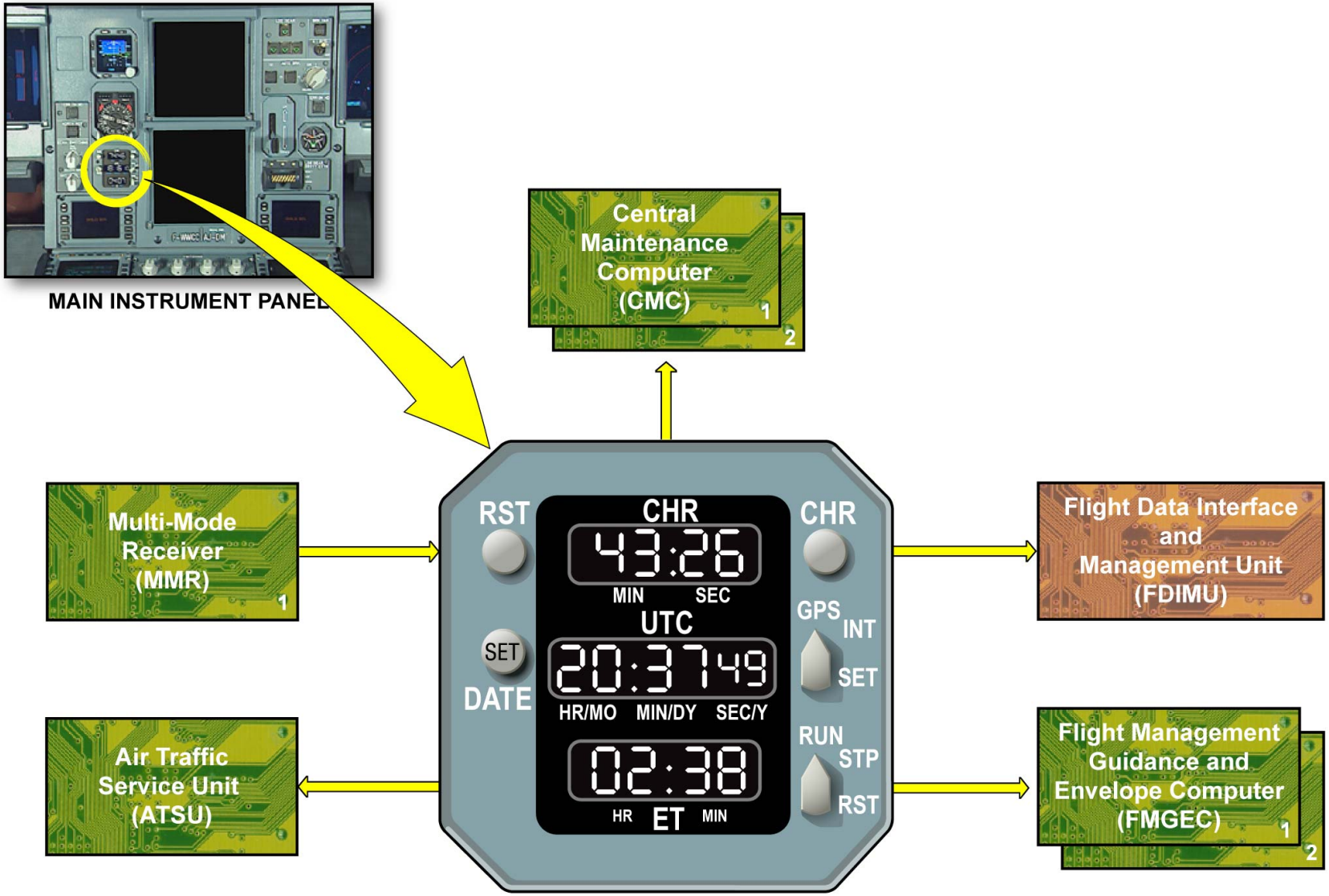

CLOCK - CLOCK INTERFACES

G7508471 - G3NT1T0 - FM31B1000000001

INDICATING SYSTEM LINE MAINTENANCE BRIEFING (2)

CLOCK (continued)

TIME AND DATE SETTING

The setting of the time is done with the UTC selector. When the selector is in SET position, the second digits are blanked, the minute digits flash and the hour digits are frozen. By rotating the SET button clockwise the minutes increase, counterclockwise the minutes decrease. By pushing the SET button, the hours flash, the minutes are frozen and the seconds stay blanked. By rotating the SET button, the hours can be adjusted. When the UTC selector is moved from SET to INT, the clock starts running from the adjusted time with the second digits starting at 00. The date setting is possible just after setting the time while the UTC selector is still in SET position. After the hours are set, the SET button must be pushed again. Then, the date is displayed, the year digits flash and the month and day digits are frozen. The years can be modified to obtain the chosen value, by rotating the SET button clockwise or counterclockwise. By pushing again the SET button, the months and days can be adjusted in the same way. When the UTC selector is in GPS position, the clock is synchronized with the GPS time, if a GPS signal is shown. If the signal from the GPS fails, the clock internal time base takes over.

ET FUNCTION

The Elapsed Time (ET) is displayed in digital format by two digits for the hours and two digits for the minutes. It can run up to 99 hours and 59 minutes. The ET selector must be set to the RUN position to activate the ET function. When set to STP, the ET counter stops, and the display is frozen. To reset the display, the selector must be set to RST (spring loaded position) and it returns to STP.

CHR FUNCTION

The CHRonometer information is displayed in digital format by two digits for the minutes and two digits for the seconds. The CHR is controlled using the CHR P/B, and reset is possible with the RST pushbutton. A first press on it starts the CHR and a second press stops it and freezes the display. A press on the RST P/B resets the chronometer.

G7508471 - G3NT1T0 - FM31B1000000001

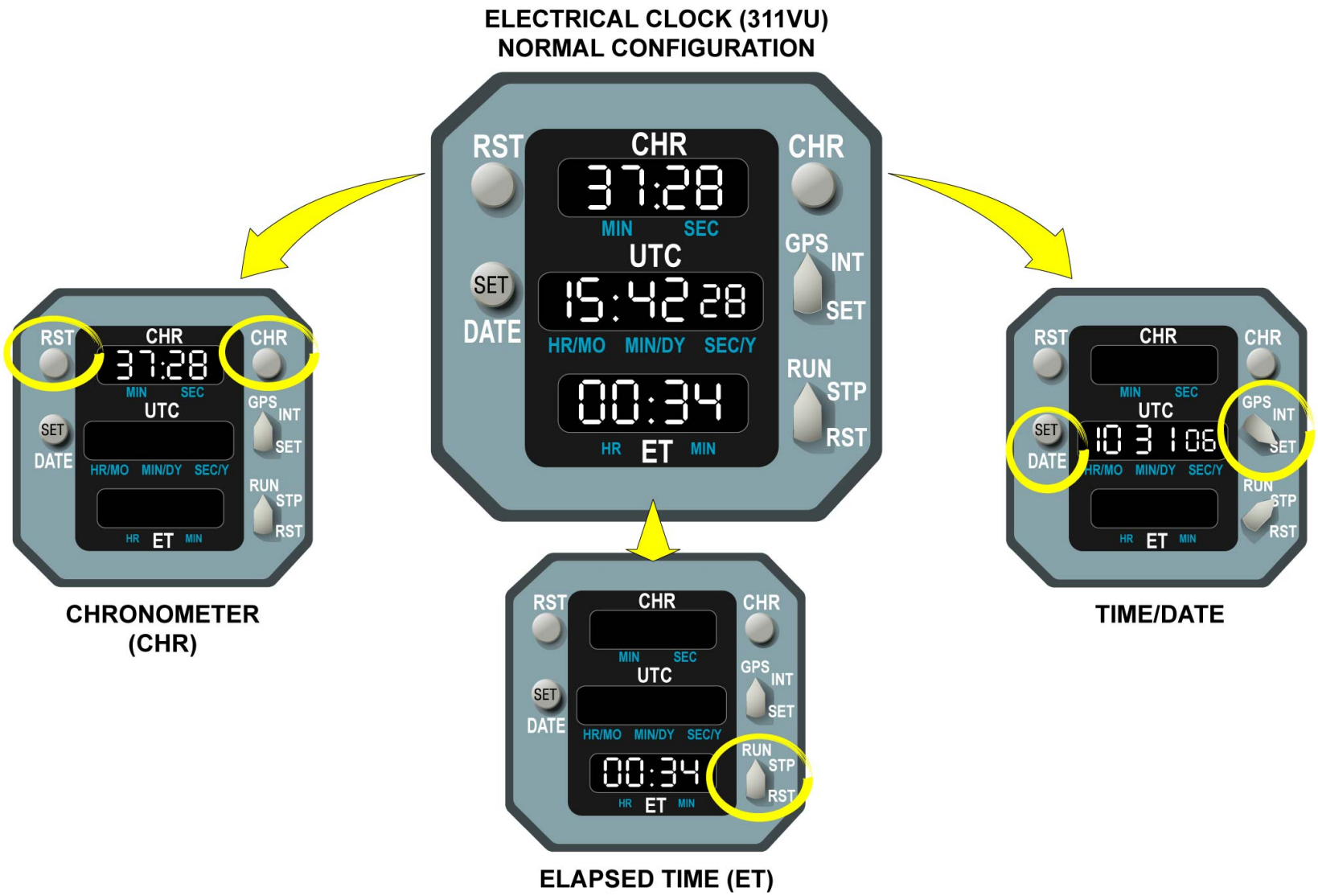

CLOCK - TIME AND DATE SETTING ... CHR FUNCTION

INDICATING SYSTEM LINE MAINTENANCE BRIEFING (2)

CLOCK (continued)

DISPLAY TEST AND FAILURE CASE

The ANNunciator LighT switch is located on the overhead panel. On the TEST position, the ANN LT switch tests all the segments of the digits on the clock display. All the displays should show eight.

POWER SUPPLY

When a loss of main electrical power supply occurs, all the clock displays are blanked. Time is still functional in memory via the aircraft battery power supply. When the main electrical power supply is restored, the displays indicate the updated data. In case of a loss of main electrical and aircraft battery power supplies, the time function is no longer available. When the power supply is restored, the time must be reset. With a clock failure the displays are no longer available.

G7508471 - G3NT1T0 - FM31B1000000001

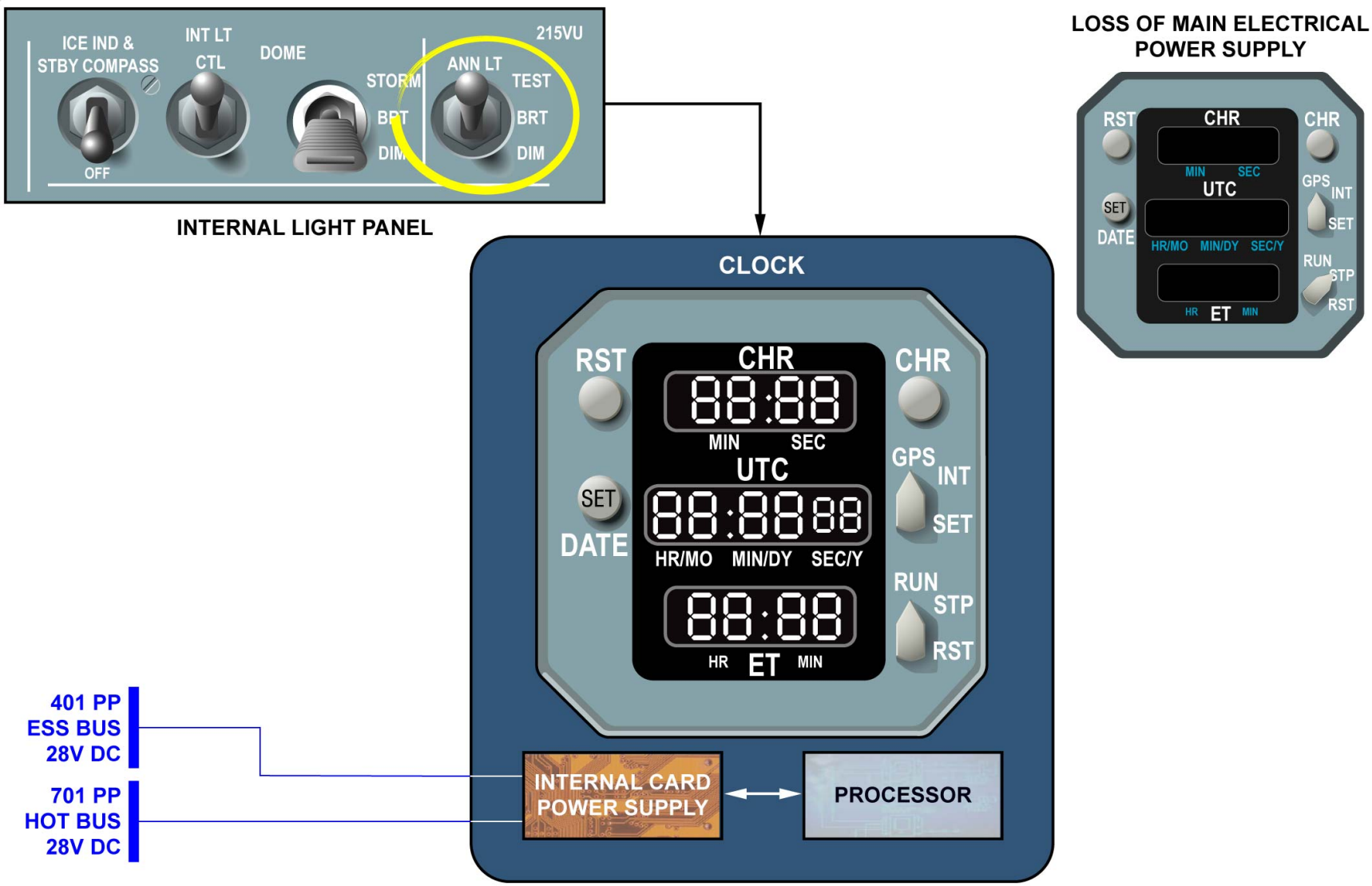

CLOCK - DISPLAY TEST AND FAILURE CASE & POWER SUPPLY

G7508471 - G3NT1T0 - FM31B100000001

INDICATING SYSTEM LINE MAINTENANCE BRIEFING (2)

CLOCK (continued)

MAINTENANCE TIPS

CHECK DATA BASE CYCLE is normally displayed on the MCDU scratchpad line if the aircraft current date does not mach the effective date of the active navigation database, and someone attempts to enter a city pair (FROM/TO) or company route (CO RTE). CLOCK/GPS TIME DIFF XX is displayed on the MCDU scratchpad line if Aircraft clock time and GPS time differs by more than XX minutes. Note that these two MCDU messages can also be displayed due to a wrong date setting on the clock. Both FLAP TIP BRK FAULT and SLAT TIP BRK FAULT, ECAM warning messages, are normally displayed in case of FLAP/SLAT tip brake failures. These messages could appear if the automatic Wing Tip Brake (WTB) engagement test is not done or if it is unsuccessful for 10 consecutive days (Ref. to AMM ATA 27 51 00 and 27 81 00). Note that these ECAM messages can also be displayed due to a wrong date setting on the clock. The procedure to correctly set the clock is given by the following AMM task: ATA 31 21 00 750 801.

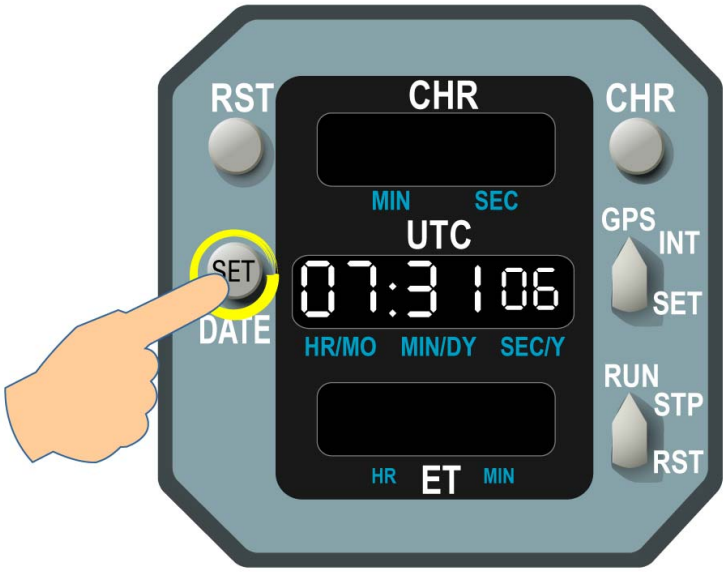

(311VU)

Wrong time and date settings can lead to a delayed aircraft dispatch.

MCDU

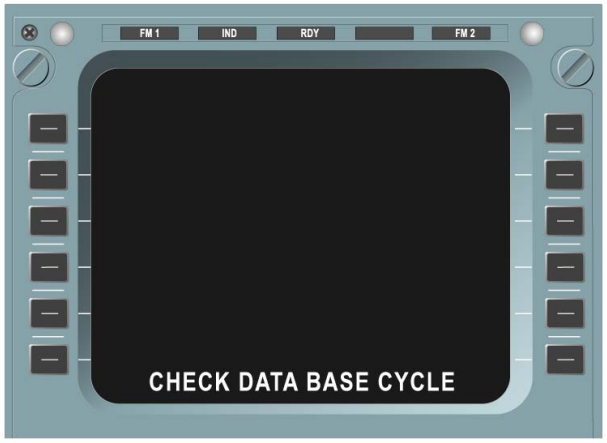

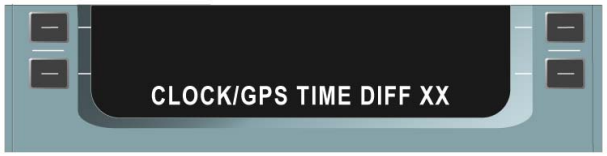

ENGINE/WARNING DISPLAY (EWD)

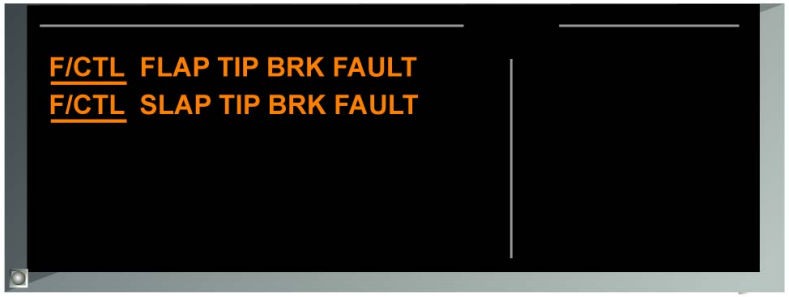

CLOCK - MAINTENANCE TIPS

EIS GENERAL DESCRIPTION (3)

GENERAL

The Electronic Instrument System (EIS) presents data to the pilots on six identical and interchangeable Liquid Crystal Display (LCD) units.
This EIS is divided into 2 parts:
- the Electronic Flight Instrument System (EFIS) composed of: 2 Primary Flight Displays (PFDs), and 2 Navigation Displays (NDs).
- the Electronic Centralized Aircraft Monitoring (ECAM) composed of: an Engine/Warning Display (EWD), a System Display (SD) and attention getters.

G7508471 - G3NT1T0 - FM31DB000000001

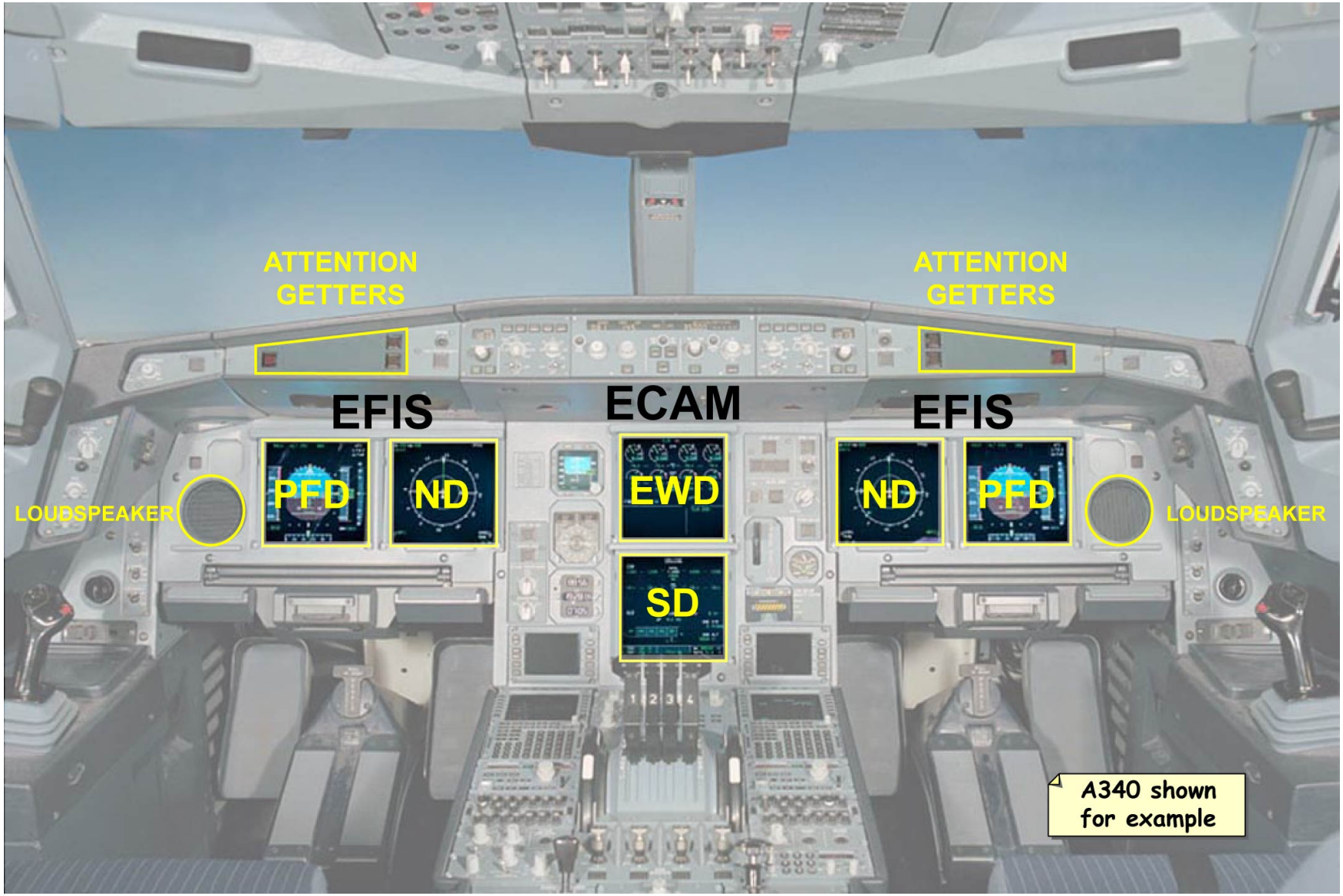
ATTENTION GETTERS
ATTENTION GETTERS
EFIS
ECAM
EFIS
LOUDSPEAKER
PFD
ND
EWD
ND
PFD
LOUDSPEAKER
SD
A340 shown for example

GENERAL

EIS GENERAL DESCRIPTION (3)

EFIS

The EFIS information is presented in front of each pilot on a PFD and a ND. The PFD displays the basic flight information required for short-term flight. The ND displays the flight information required for navigation. For each pilot, an EFIS control panel is used for the selection of the displayed modes. An EFIS switching panel for each pilot is used for reconfiguration purposes.

G7508471 - G3NT1T0 - FM31DB000000001

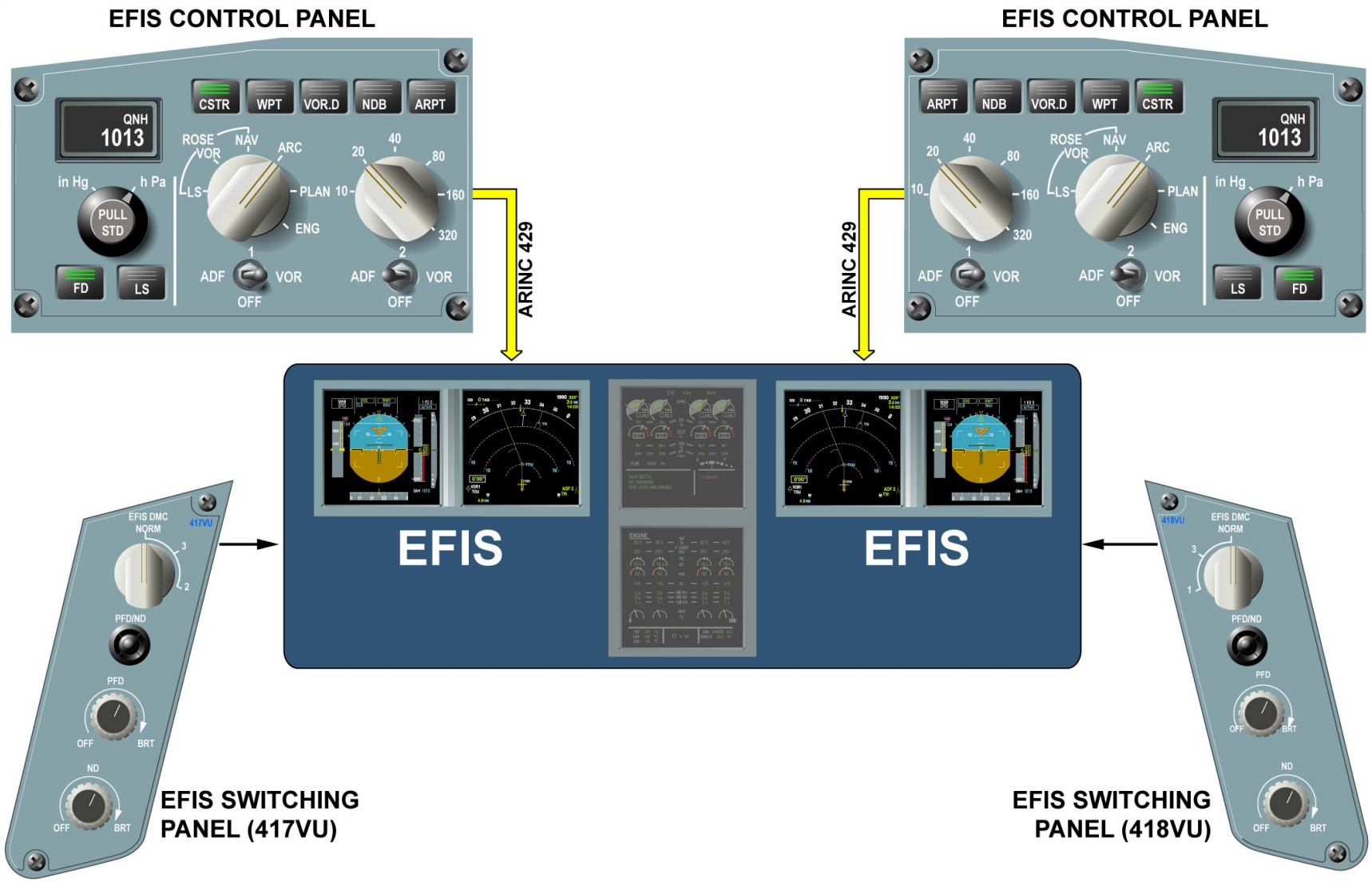
EFIS CONTROL PANEL
EFIS CONTROL PANEL
CSTR
WPT
VOR.D
NDB
ARPT
QNH
1013
in Hg
h Pa
PULL
STD
FD
LS
ROSE
VOR
NAV
ARC
LS
PLAN
ENG
ADF
VOR
OFF
ARINC 429
ARINC 429
EFIS
EFIS
EFIS DMC
NORM
417VU
418VU
PFD/ND
PFD
ND
OFF
BRT
EFIS SWITCHING
PANEL (417VU)
EFIS SWITCHING
PANEL (418VU)

EFIS

EIS GENERAL DESCRIPTION (3)

EFIS (continued)

PFD PRESENTATION AND CONTROL

The PFD is divided into several zones. The ATTITUDE and GUIDANCE area presents the aircraft symbols for pitch and roll angle indications, flight path and the drift angle. Heading marks are displayed just under the horizon line if the pitch angle, roll angle and heading information is valid. It also displays the guidance symbols (FD bars), via the FD P/BSW on the EFIS control panel. If the FD is off, a selected heading (or track) cyan symbol is displayed on the horizon line.

The AIRSPEED scale presents speed information plus significant limits such as, protections/targets. The MACH number can also be presented. The HEADING scale presents the aircraft heading and track. The VERTICAL SPEED scale presents the aircraft descent or climb rate. The ALTITUDE scale presents the altitude according to the baro reference setting on the EFIS control panel. The TRAJECTORY DEVIATION presents the lateral and vertical deviation of the aircraft in approach phase as well as the ILS/DME station characteristics by pressing in the LS P/BSW on the EFIS control panel. The FLIGHT MODE ANNUNCIATOR (FMA) provides the pilot with the various active or armed Auto Flight System (AFS) modes.

G7508471 - G3NT1T0 - FM31DB000000001

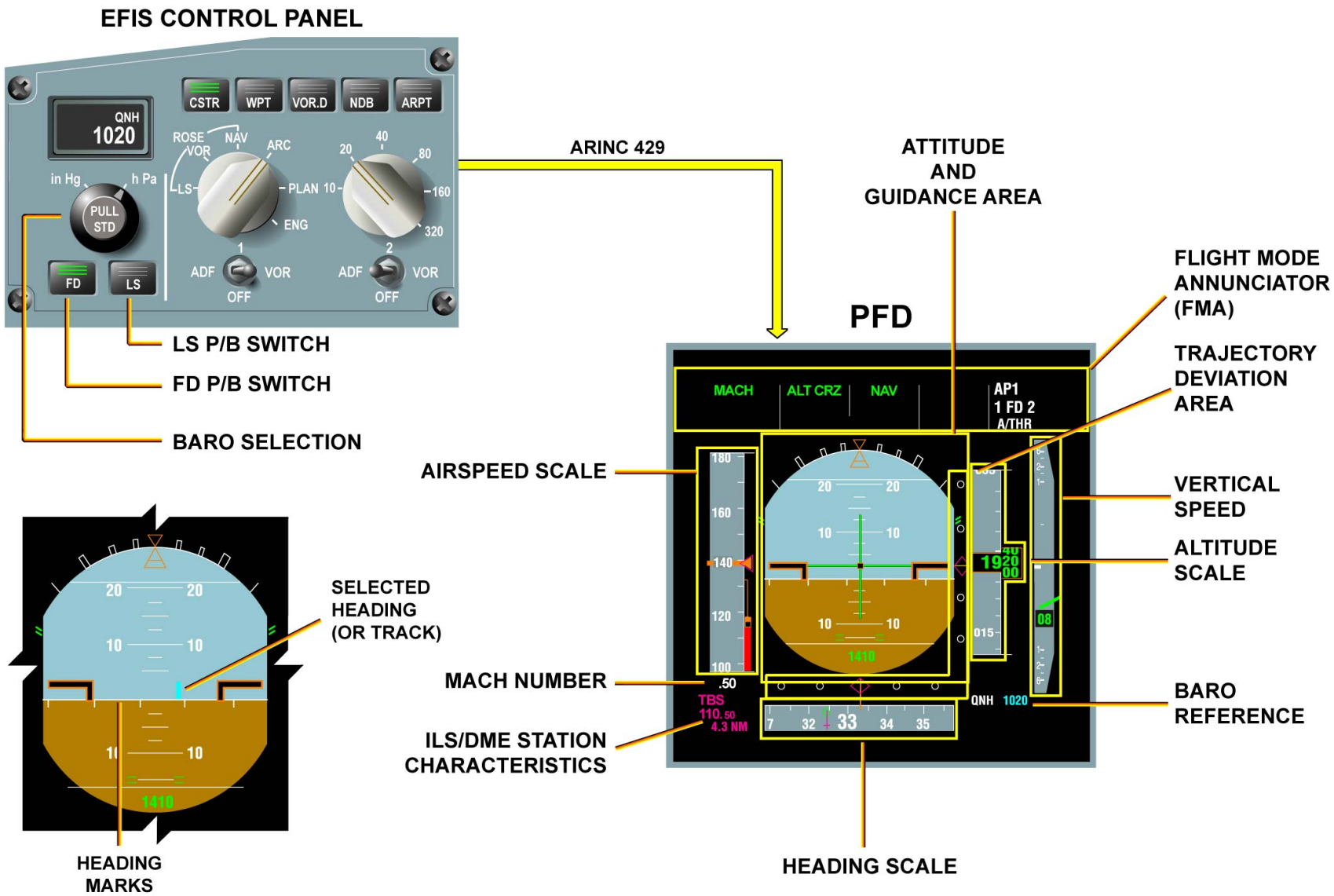

EFIS - PFD PRESENTATION AND CONTROL

EIS GENERAL DESCRIPTION (3)

EFIS (continued)

ND PRESENTATION AND CONTROL

The ND presents navigation information with 5 different modes selectable by the crew on the EFIS control panel. An ENGINE STANDBY mode is also available. These different selectable modes are:
- ROSE ILS,
- ROSE VOR,
- ROSE NAV,
- ARC,
- PLAN,
- ENG.

G7508471 - G3NT1T0 - FM31DB000000001

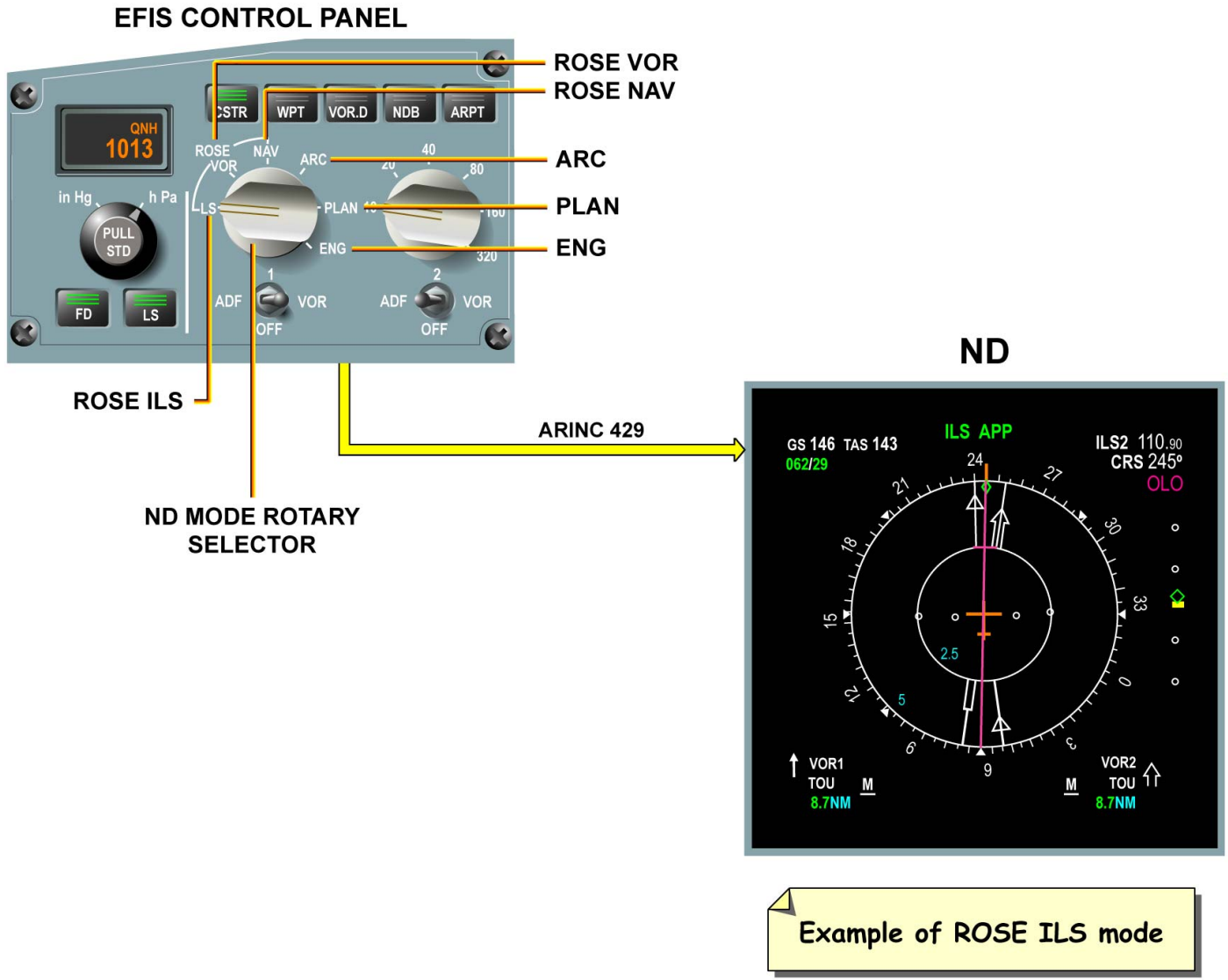

EFIS - ND PRESENTATION AND CONTROL

EIS GENERAL DESCRIPTION (3)

ECAM

The ECAM information is presented on the center instrument panel on an EWD and a SD. The EWD displays engine parameters, Fuel On Board (FOB), slat and flap position, warnings and memo messages. The SD displays synoptic giving the configuration of various aircraft systems. The ECAM controls are provided by the ECAM Control Panel (ECP) for display and by the ECAM switching panel for reconfiguration. The pilot's attention is drawn by:
- 2 MASTER CAUTion, 2 MASTER WARNing, and 2 AUTOLAND warning lights.
- audio signals and auto call out (synthetic voices) are broadcast by 2 loudspeakers.

G7508471 - G3NT1T0 - FM31DB000000001

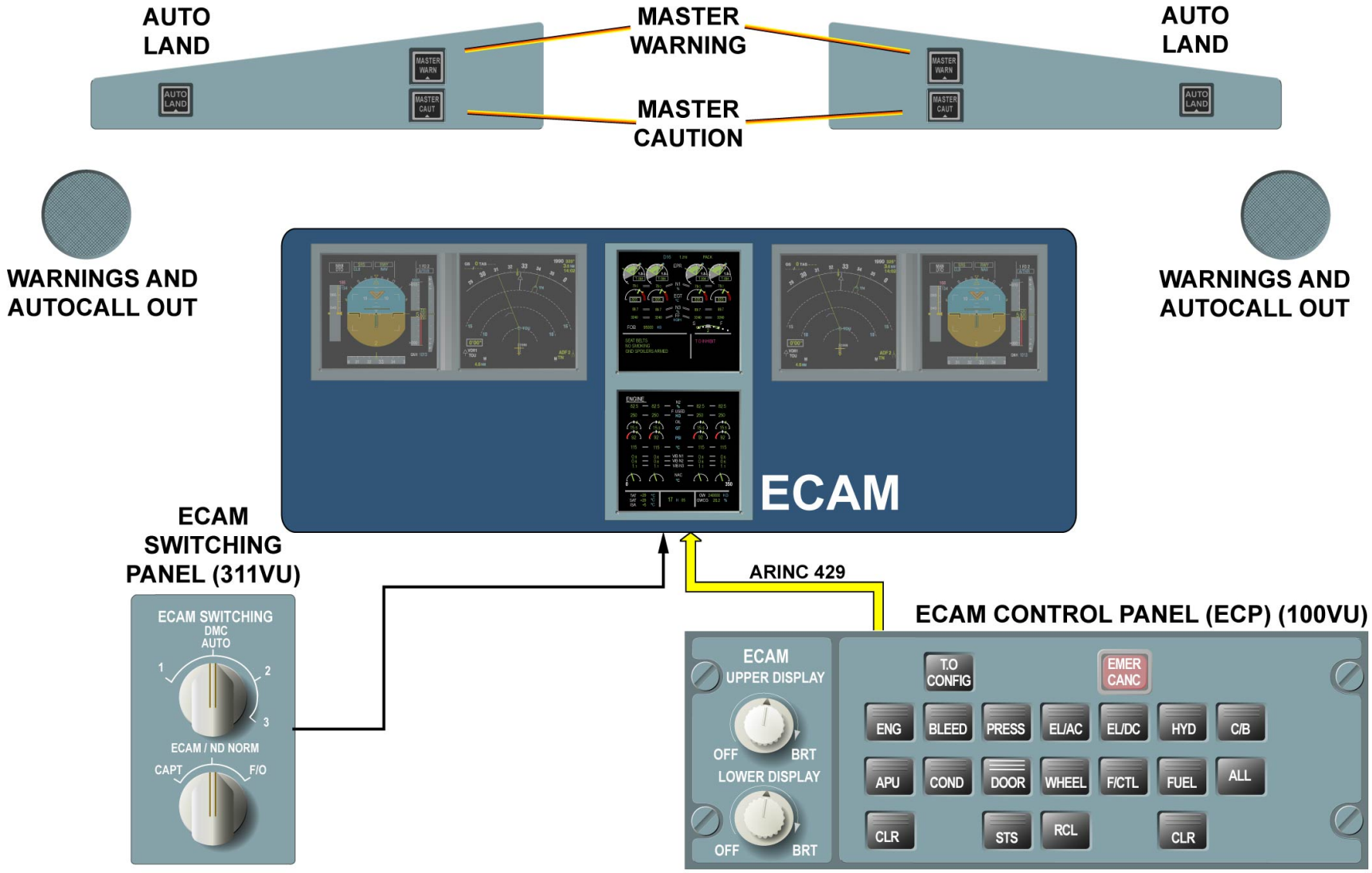
AUTO LAND
MASTER WARNING
MASTER CAUTION
AUTO LAND
WARNINGS AND AUTOCALL OUT
WARNINGS AND AUTOCALL OUT
ECAM
ECAM SWITCHING PANEL (311VU)
ARINC 429
ECAM CONTROL PANEL (ECP) (100VU)
ECAM SWITCHING
DMC
AUTO
1
2
3
ECAM / ND NORM
CAPT
F/O
ECAM
UPPER DISPLAY
OFF
BRT
LOWER DISPLAY
OFF
BRT
T.O CONFIG
EMER CANC
ENG
BLEED
PRESS
EL/AC
EL/DC
HYD
C/B
APU
COND
DOOR
WHEEL
F/CTL
FUEL
ALL
CLR
STS
RCL
CLR

ECAM

EIS GENERAL DESCRIPTION (3)

ECAM (continued)

EWD PRESENTATION AND CONTROL

The EWD, also called upper ECAM display, is divided into 2 areas.
The upper area displays primary parameters:
- engine primary parameters,
- FOB (Fuel On Board),
- slats/flaps position.

The lower area displays:
- warning and caution messages
- secondary failures and memo messages.

The ECP enables the pilot to switch on and off the EWD, control the brightness and control the ECAM operation.

G7508471 - G3NT1T0 - FM31DB000000001

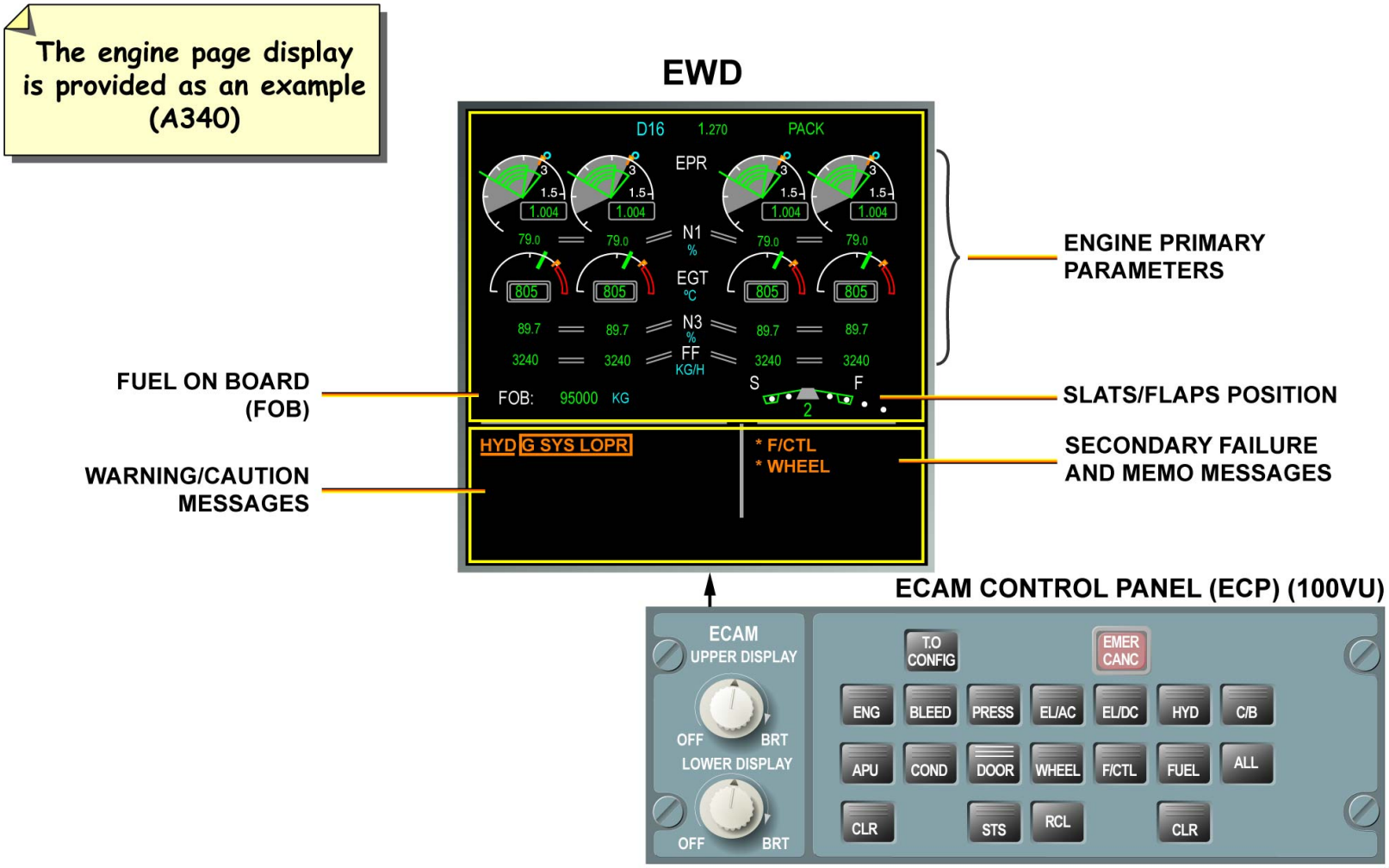

ECAM - EWD PRESENTATION AND CONTROL

EIS GENERAL DESCRIPTION (3)

ECAM (continued)

SD PRESENTATION AND CONTROL

The SD, also called lower ECAM display, is divided into two areas.
The upper area displays system or status pages, which are called automatically or manually through the ECP.
The lower area displays the permanent data:
- Total Air Temperature (TAT),
- Static Air Temperature (SAT),
- Delta International Standard Atmosphere (ISA),
- Gross Weight (GW),
- Center of Gravity (GWCG) and,
- Universal Coordinated Time (UTC).

NOTE: The delta ISA indication is only displayed when the standard altitude mode is selected on CAPT side.

G7508471 - G3NT1T0 - FM31DB000000001

A340 shown for example

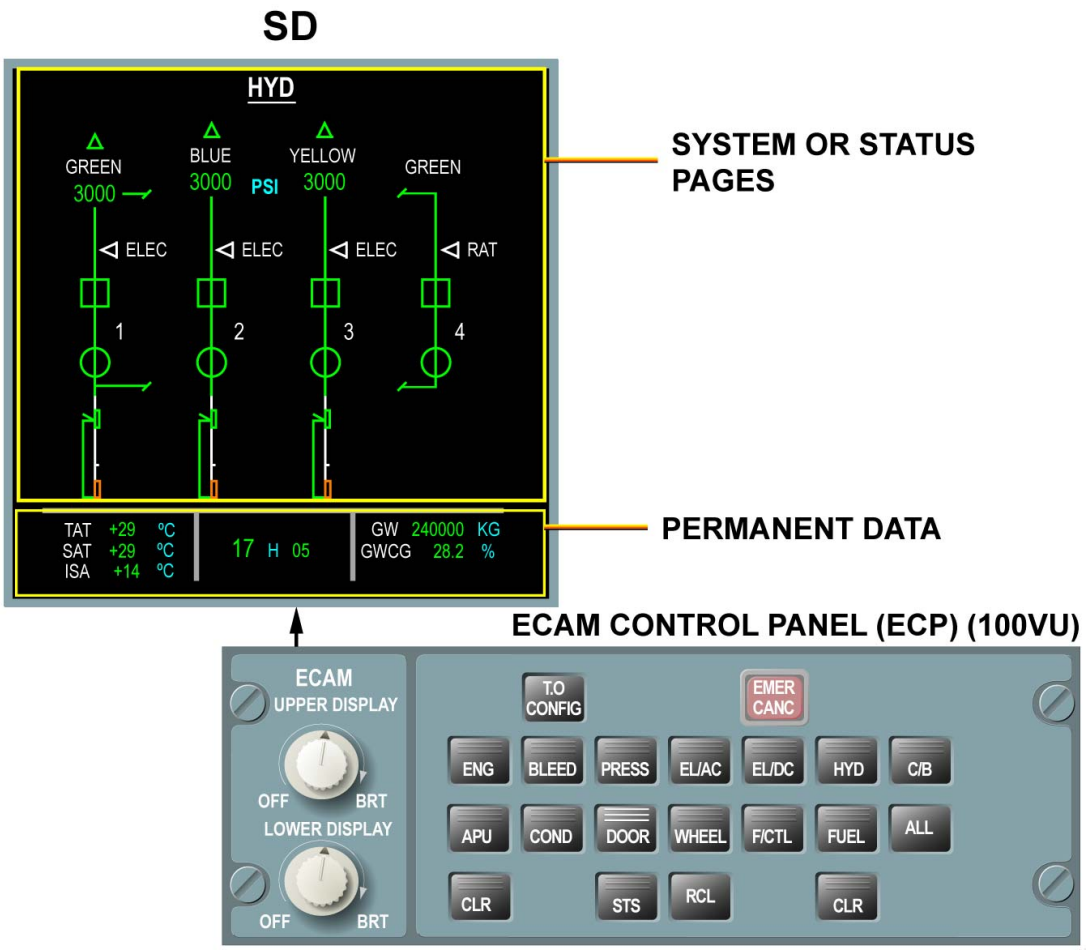

ECAM - SD PRESENTATION AND CONTROL

G7508471 - G3NT1T0 - FM31DB00000001

EIS GENERAL DESCRIPTION (3)

EIS ARCHITECTURE

The EIS is an avionics system connected to most of the aircraft systems to fulfill the EFIS and ECAM functions. The EIS comprises 7 computers:
- 3 identical and interchangeable Display Management Computers (DMCs),
- 2 identical and interchangeable Flight Warning Computers (FWCs),
- 2 identical and interchangeable System Data Acquisition Concentrators (SDACs).

It also comprises 6 LCD units. The LCD units have the capability to compute and generate the symbols to be displayed from data, sent by the DMCs. On A340-500 (Option) and A340-600 aircrafts, it is also possible to display video image.

G7508471 - G3NT1T0 - FM31DB000000001

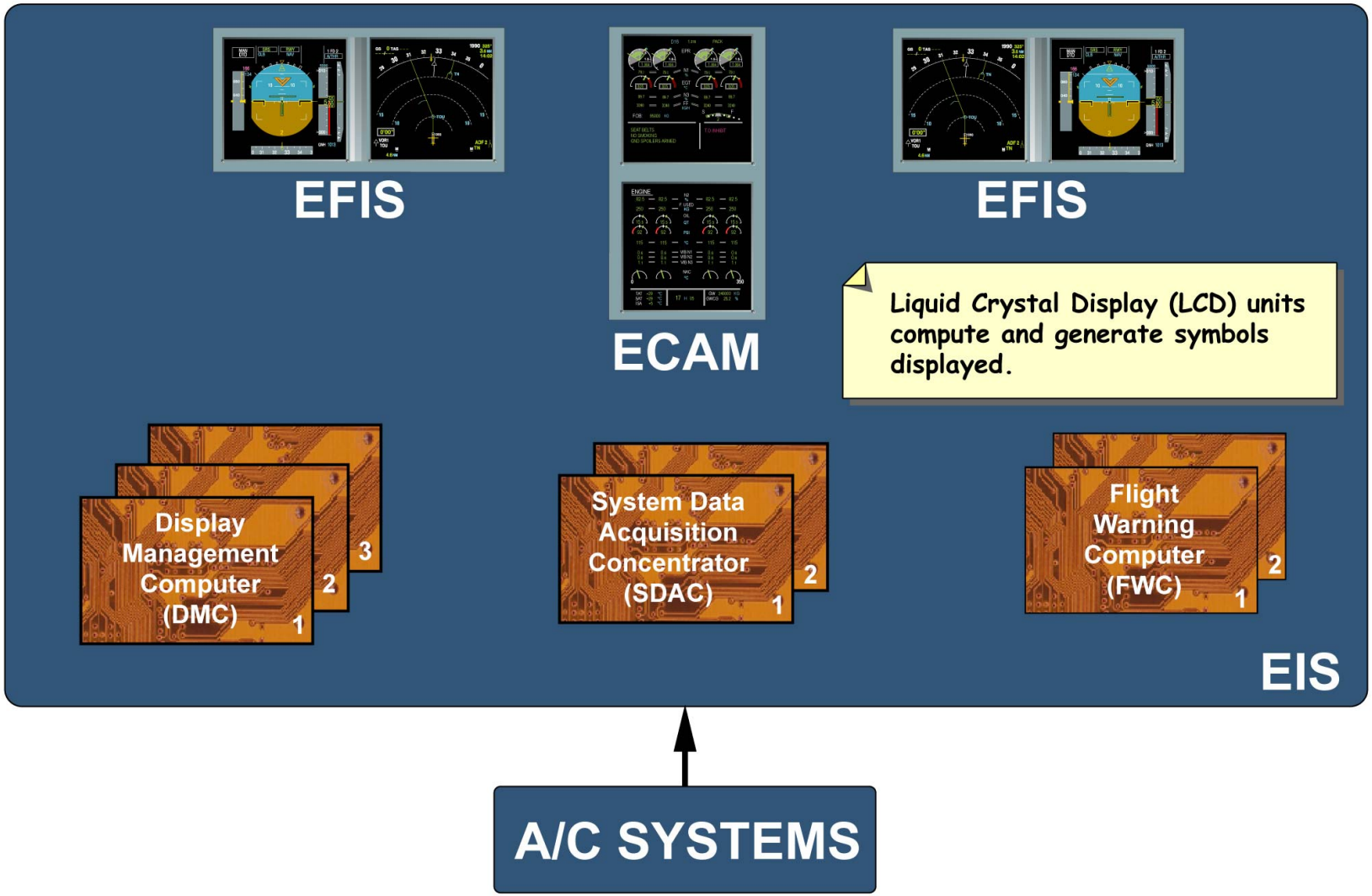

EIS ARCHITECTURE

G7508471 - G3NT1T0 - FM31DB000000001

EIS GENERAL DESCRIPTION (3)

EIS ARCHITECTURE (continued)

EFIS

The 3 DMCs can be considered as data concentrators. Throughout a flight, the DMCs collect and process aircraft system data necessary for the aircraft handling operation and navigation. These data are sent to the crew respectively on the PFD and ND. The PFD presents short term data and the ND presents long term data. The DMC 1 normally drives the CAPT PFD and ND. The DMC 2 normally drives the F/O PFD and ND. The DMC 3 is in standby and can be used in case of DMC 1 or/and 2 failure.
The EFIS reconfiguration (DMCs and LCD units) can be achieved either automatically or manually through the EFIS switching panels.
Three main types of reconfiguration are considered for EFIS:
- in case of single or multiple LCD units failure,
- in case of single or multiple DMC failure,
- in case of external computer information source failure.

LCD units also receive weather radar (WXR) signals, Enhanced Ground Proximity Warning System (EGPWS) terrain image and video signals from taxi cameras.

G7508471 - G3NT1T0 - FM31DB000000001

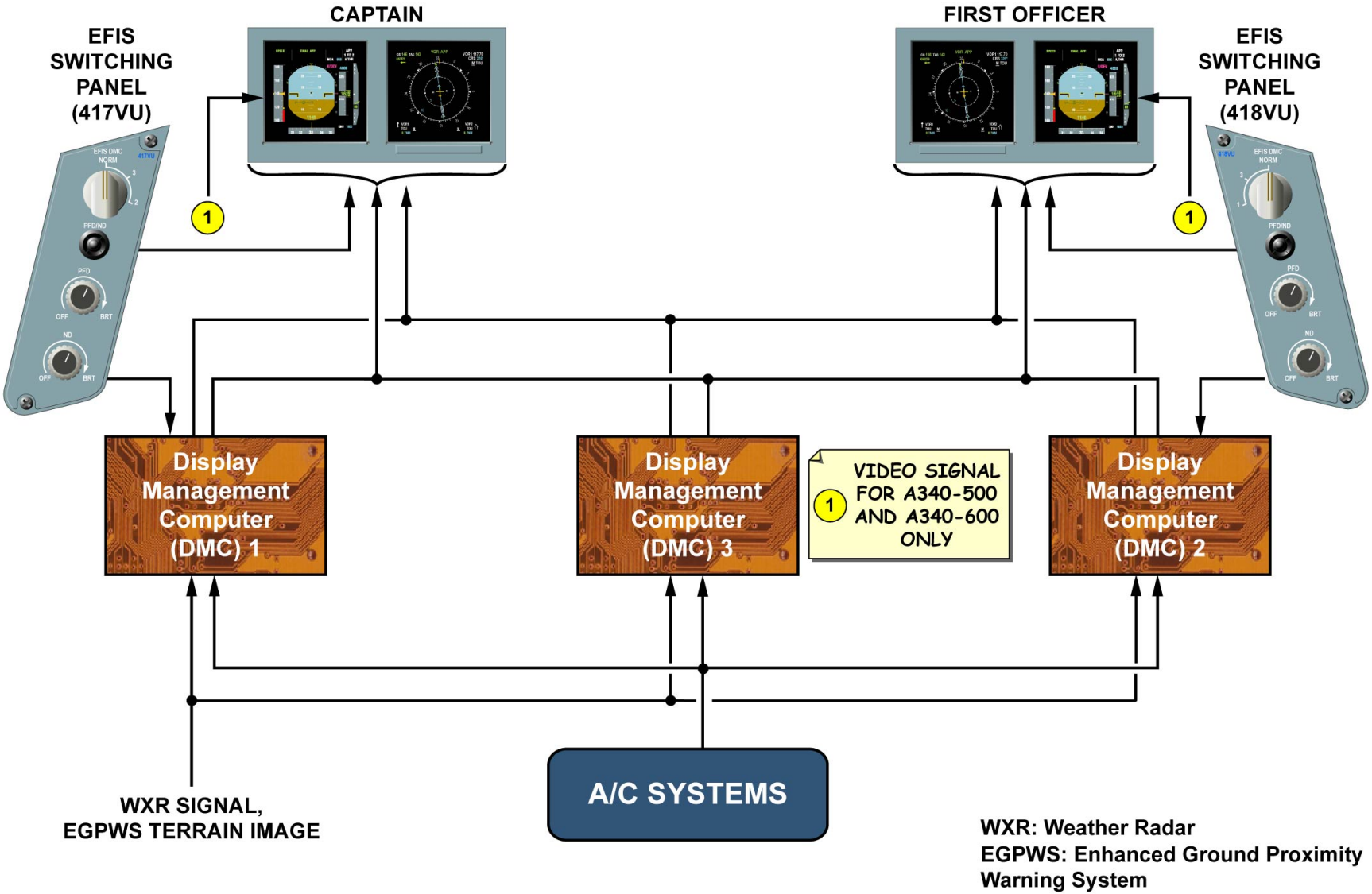

EIS ARCHITECTURE - EFIS

G7508471 - G3NT1T0 - FM31DB000000001

EIS GENERAL DESCRIPTION (3)

EIS ARCHITECTURE (continued)

ECAM

The ECAM function is achieved by the SDACs and the FWCs. The Flight Warning System (FWS) provides operational assistance during normal and abnormal configurations of the aircraft systems. The ECAM is used for management purposes of these systems. The SDACs fulfill 3 main functions:
- data acquisition from the aircraft systems,
- data concentration,
- data digitizing to be sent to the DMCs for display on the SD.

The DMCs directly receives aircraft systems data for display on the upper part of the EWD. The SDACs receive and digitize aircraft system information concerning amber cautions and transmit it to the FWCs. The FWCs fulfill 3 main functions:
- data acquisition from some main aircraft systems,
- data warning computation (all warnings, memos, status),
- flight phase computation according to the aircraft configuration.

The FWCs directly receive aircraft system data concerning red warnings and generate memos. They generate all warning messages and activate attention getters (MASTER WARN/MASTER CAUT and AUTOLAND) as well as audio signals and auto call outs (synthetic voices) broadcast by two loudspeakers (no volume control for the audio signals). The DMC 3 normally drives the EWD and the SD. The DMC 1 and DMC 2 are in standby and can be used in case of DMC 3 failure.
The ECAM reconfiguration (DMCs and LCD units) can be achieved either automatically or manually through the ECAM switching panel. The SD also receives a video signal from the taxi cameras.

G7508471 - G3NT1T0 - FM31DB000000001

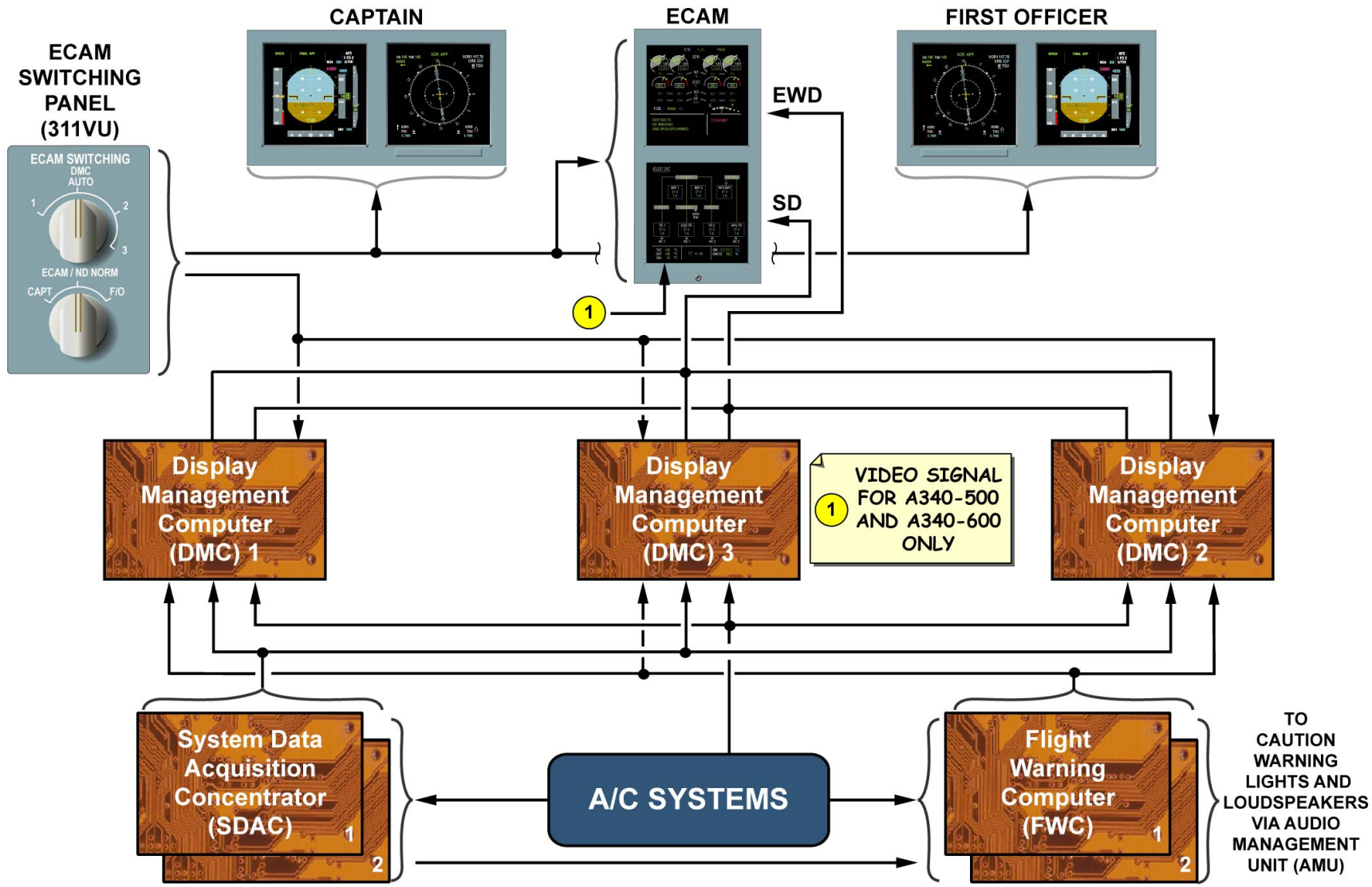

EIS ARCHITECTURE - ECAM

G7508471 - G3NT1T0 - FM31DB000000001

EIS GENERAL DESCRIPTION (3)

REDUNDANCY

A great redundancy between systems is used to minimize the loss of information. The fully redundant architecture of the FWS allows it to be transparent to any single internal failure. With the EIS architecture, a single SDAC failure associated to a single FWC and 2 DMCs failures, it is still possible to display EFIS and ECAM information on the LCD units. In the case of a single SDAC failure associated to a single FWC failure, the ECAM system continues to operate.

G7508471 - G3NT1T0 - FM31DB000000001

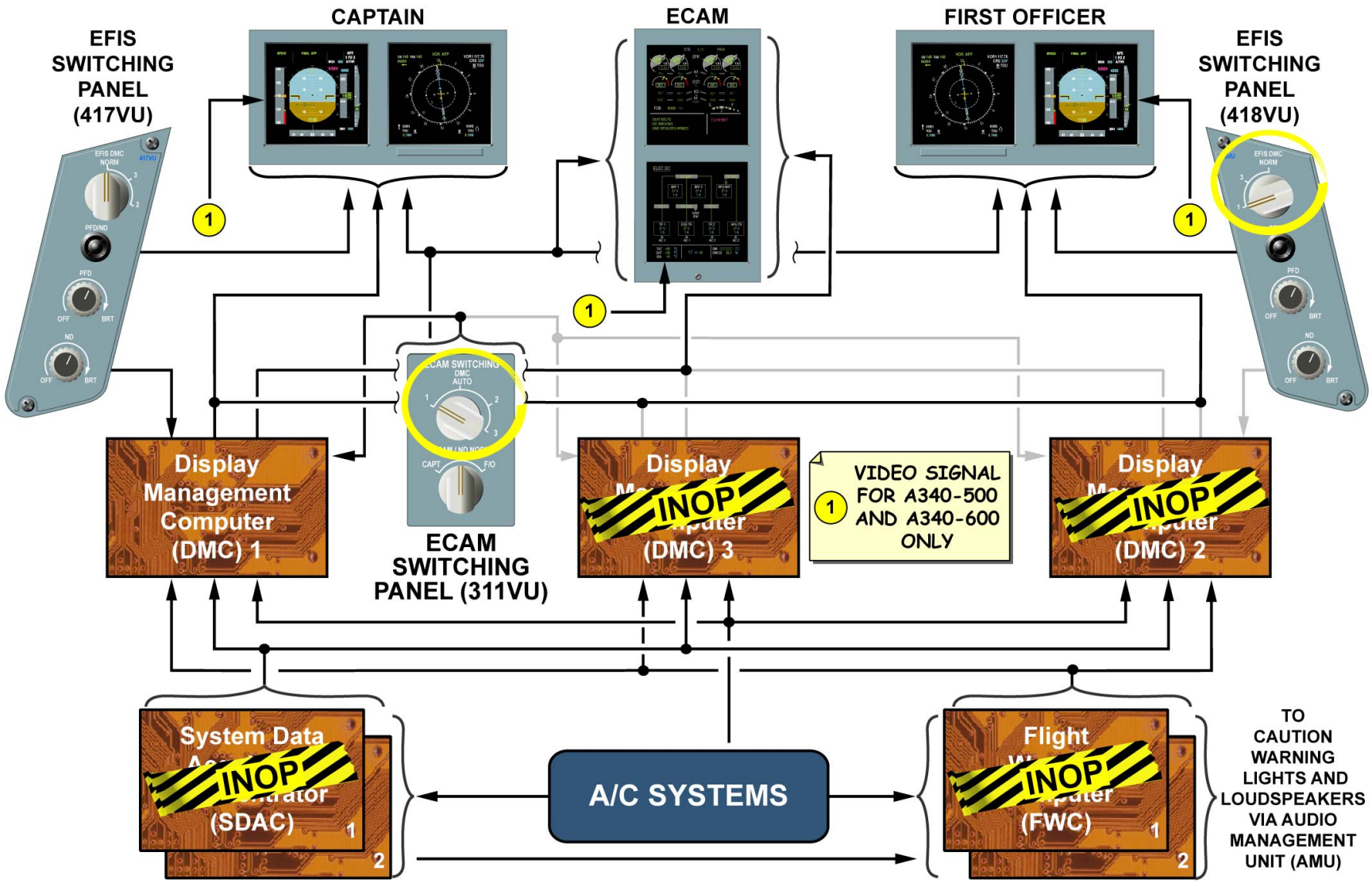

REDUNDANCY

G7508471 - G3NT1T0 - FM31DB000000001

EIS ECAM NORMAL & MANUAL MODE GENERAL DESC. (3)

GENERAL

The Electronic Centralized Aircraft Monitoring (ECAM) gives to the flight crew the aircraft system displays. The ECAM shows data on two Liquid Crystal Display (LCD) units, the upper ECAM is the Engine/Warning Display (EWD) and the lower ECAM is the System Display (SD). These LCDs are fully interchangeable.

G7508471 - G3NT1T0 - FM31DC000000002

ENGINE/WARNING DISPLAY (EWD)

SYSTEM DISPLAY (SD)

These ECAM pages are shown with an A330, RR Trent engines with metric units. These displays are shown as examples.

GENERAL

EIS ECAM NORMAL & MANUAL MODE GENERAL DESC. (3)

ENGINE/WARNING DISPLAY PRESENTATION

The EWD gives the essential data necessary to monitor engine parameters, warnings, cautions, checklist, and memos to the flight crew. The upper area is related to engine parameters (engine primary, fuel on board and slat/flat position), these are given in analog and/or digital form.
The lower area is dedicated to warning/caution and memo messages. Warnings and memos are automatically generated by the Flight Warning Computer (FWC). The left memo area is dedicated to warnings and cautions (primary or independent failures) or memo information related to procedural pilot actions or memo information. The right memo area is dedicated to the system affected by a warning or a caution (secondary failure) or memo information related to the phase inhibition (takeoff and landing only) or temporary pilot actions (ANTI ICE ON) or special lines (AP OFF).
Status, advisory and overflow are indications on the display.
The advisory (ADV), appears by pulsing in white to indicate that an aircraft system parameter has drifted out of its normal operating range. In ECAM single display mode, the related page pushbutton will also flash on the ECAM Control Panel (ECP) to indicate to the crew which system page is affected by an advisory.
The status (STS) indicates that a status message is on the ECAM status page. The overflow arrow indicates that the warning messages exceed the capacity of the display on the left memo area (7 lines). In this case, the heading titles of the warning messages are displayed on the right memo area.

G7508471 - G3NT1T0 - FM31DC000000002

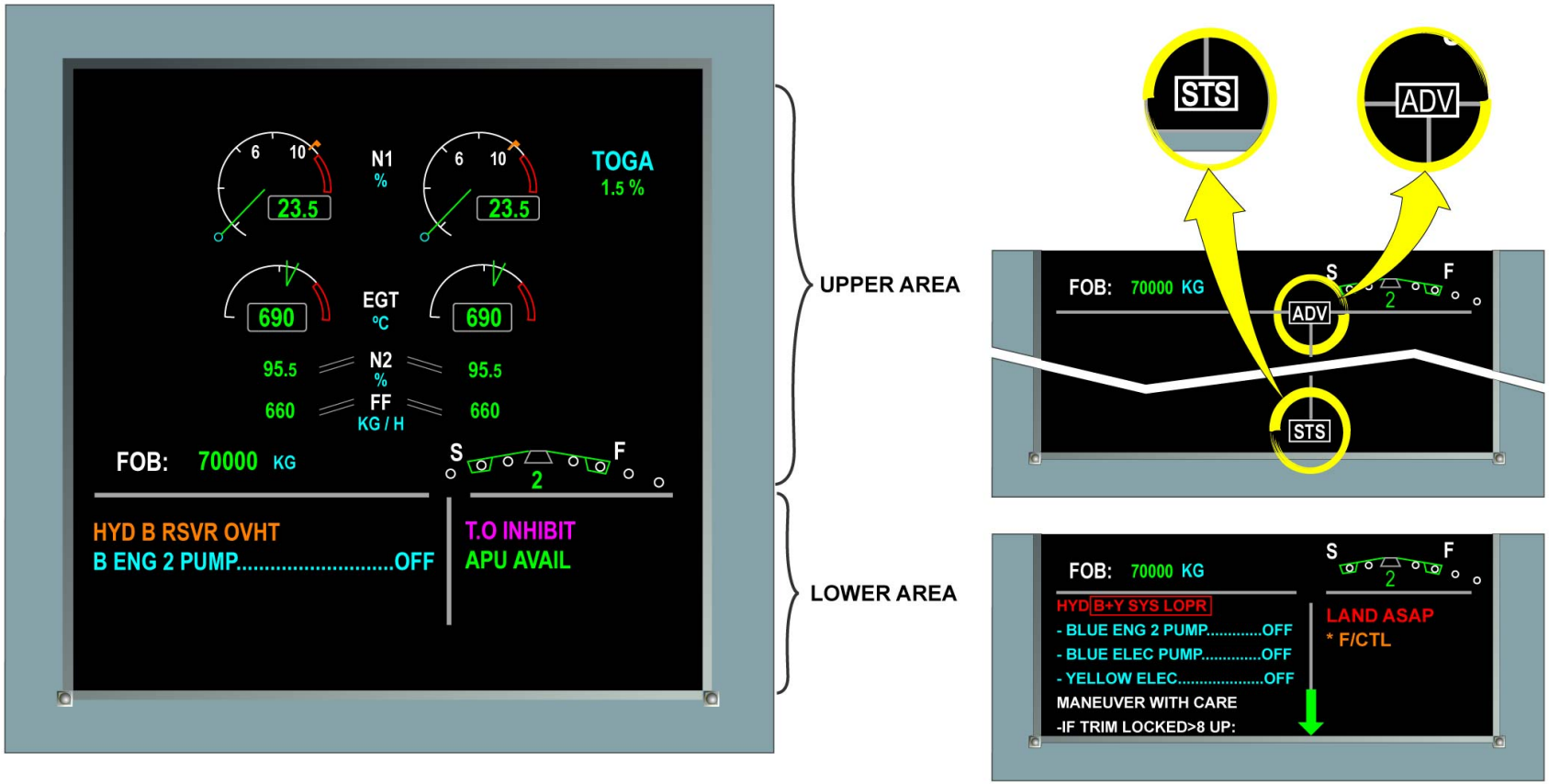

These ECAM pages are shown with an A330, GE engines with metric units. These displays are shown as examples.

ENGINE/WARNING DISPLAY PRESENTATION

EIS ECAM NORMAL & MANUAL MODE GENERAL DESC. (3)

SYSTEM DISPLAY PRESENTATION

The SD is divided into 2 areas:
- the upper area displays system or status pages,
- the lower area is dedicated to permanent data.

The SD can display one of 13 system pages, cruise page or status page. In normal operation, the SD automatically shows the system pages according to the current flight phase. Nevertheless manual page selection is always possible. The CRUISE page is automatically displayed in flight (no manual selection). It displays the main system parameters to monitor during the flight.
The status page is an operational summary of the current aircraft condition.
The information is displayed at the end of an ECAM procedure or upon crew request.
The status page includes:
- the limitation, approach procedures, information and cancelled cautions are displayed in the left column,
- the inoperative systems below the caption "INOP SYS" and any class 2 system failure below the caption "MAINTENANCE" are displayed in the right column.

At the bottom of the SD, below the grey line is the permanent data. It is always displayed whatever system page is present.
Total Air Temperature (TAT) and Static Air Temperature (SAT) are digital values. International Standard Atmosphere (ISA) is in fact a delta ISA indication that appears only if the Captain Baro Selector is set to standard barometric reference. The captions (TAT, SAT, ISA, GW, GWCG) are displayed in white and the units in cyan. The values are normally displayed in green. When data sent with the Sign Status Matrix (SSM) bits set to no computed data, amber crosses replace the values. Load factor (G LOAD) is only displayed amber when the aircraft speed is above 80 kts and if the value is more than +1.4 G or less than -0.7 G for more than 2 seconds. The information remains in view for 5 seconds, when the excessive condition has disappeared. Feedback to the flight crew by providing system messages can also be displayed in amber above or below the time indication. In case of degraded value, last 2 digits are dashed, in case of No Computed Data (NCD), 3 blues dashes replaces the values (on ground).

G7508471 - G3NT1T0 - FM31DC000000002

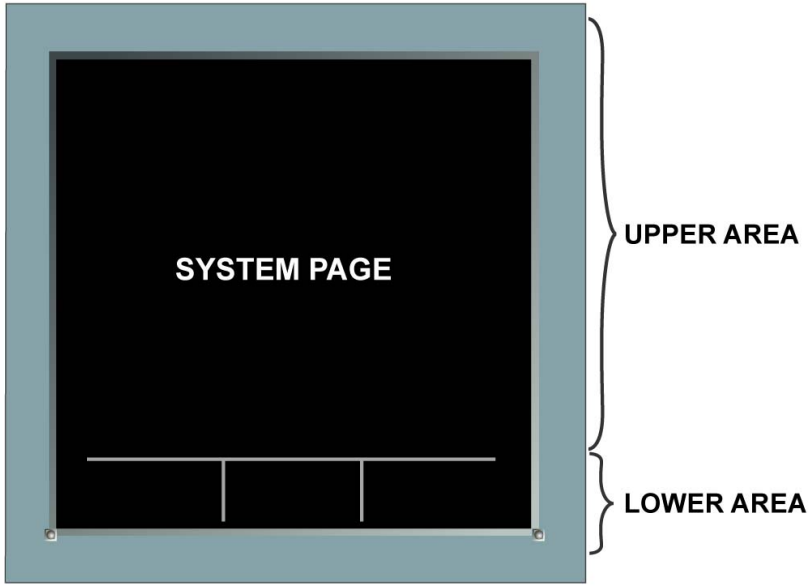

The 13 system pages are:
Air Bleed (BLEED), Air Conditioning (COND),
Cabin Pressurization (CAB PRESS),
Electrical AC Power Supply (ELEC AC),
Electrical DC Power Supply (ELEC DC),
Flight Controls (F/CTL), Fuel (FUEL),
Hydraulic Power (HYD), APU (APU),
Engine Secondary Parameters (ENGINE),
Door and Oxygen (DOOR/OXY),
Landing Gear, Wheels, Brakes (WHEEL),
Circuit Breaker Status (C/B).

The CRUISE page is shown with an A330,
GE engines with metric units.
This display is shown as an example.

SYSTEM DISPLAY PRESENTATION

G7508471 - G3NT1T0 - FM31DC000000002

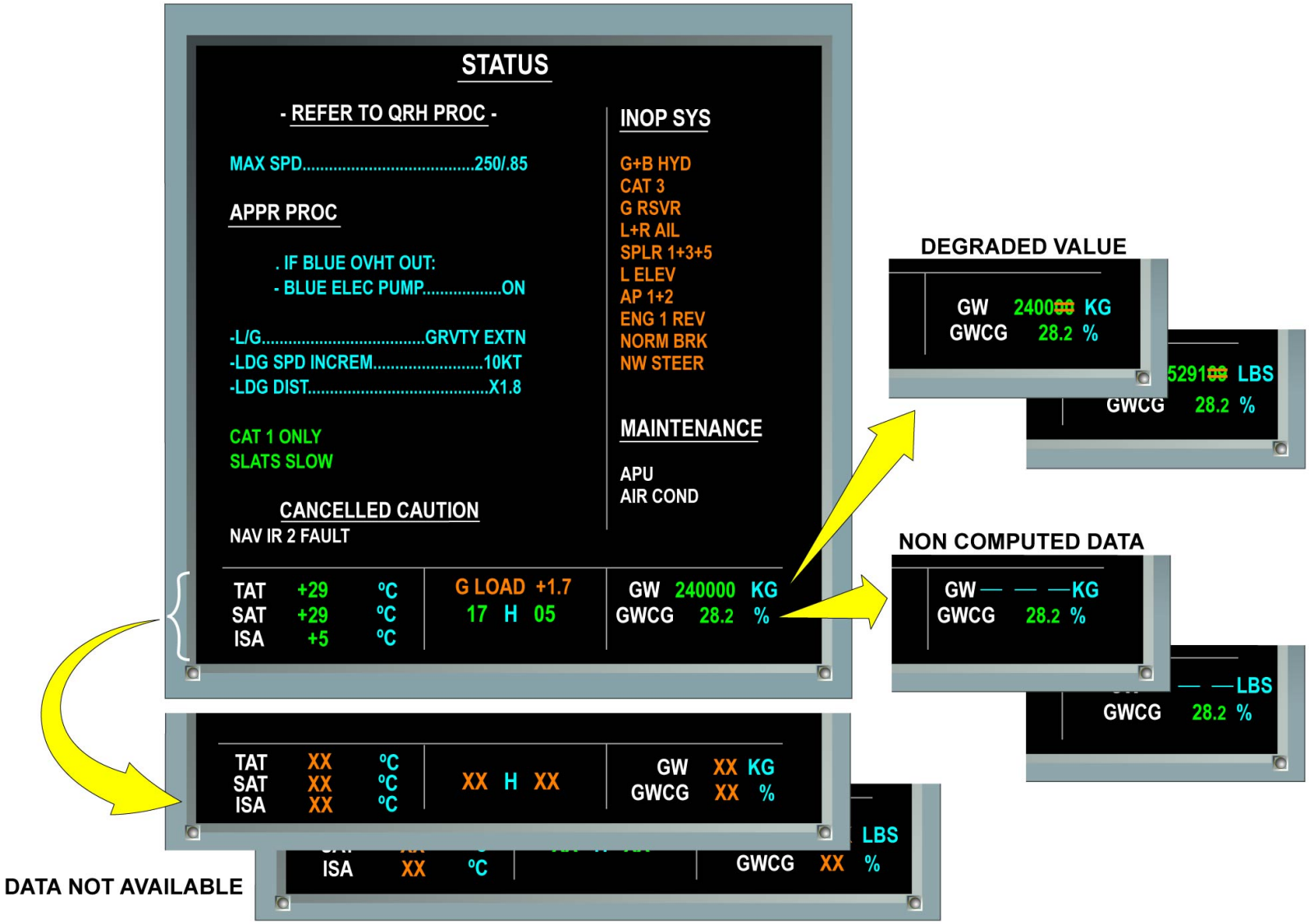

SYSTEM DISPLAY PRESENTATION

This Page Intentionally Left Blank

G7508471 - G3NT1T0 - FM31DC000000002

EIS ECAM NORMAL & MANUAL MODE GENERAL DESC. (3)

ECAM MODES

The ECAM operates in four modes for the system page presentation with a priority order:
- the normal mode according to the flight phase is automatically presented in case of an aircraft configuration change,
- the failure mode is automatically presented when warning/caution is triggered,
- the advisory mode is automatically presented when a parameter is drifting,
- the manual mode, through the ECP.

NOTE: Note that the manual mode is cancelled in case of a warning or an advisory.

G7508471 - G3NT1T0 - FM31DC000000002

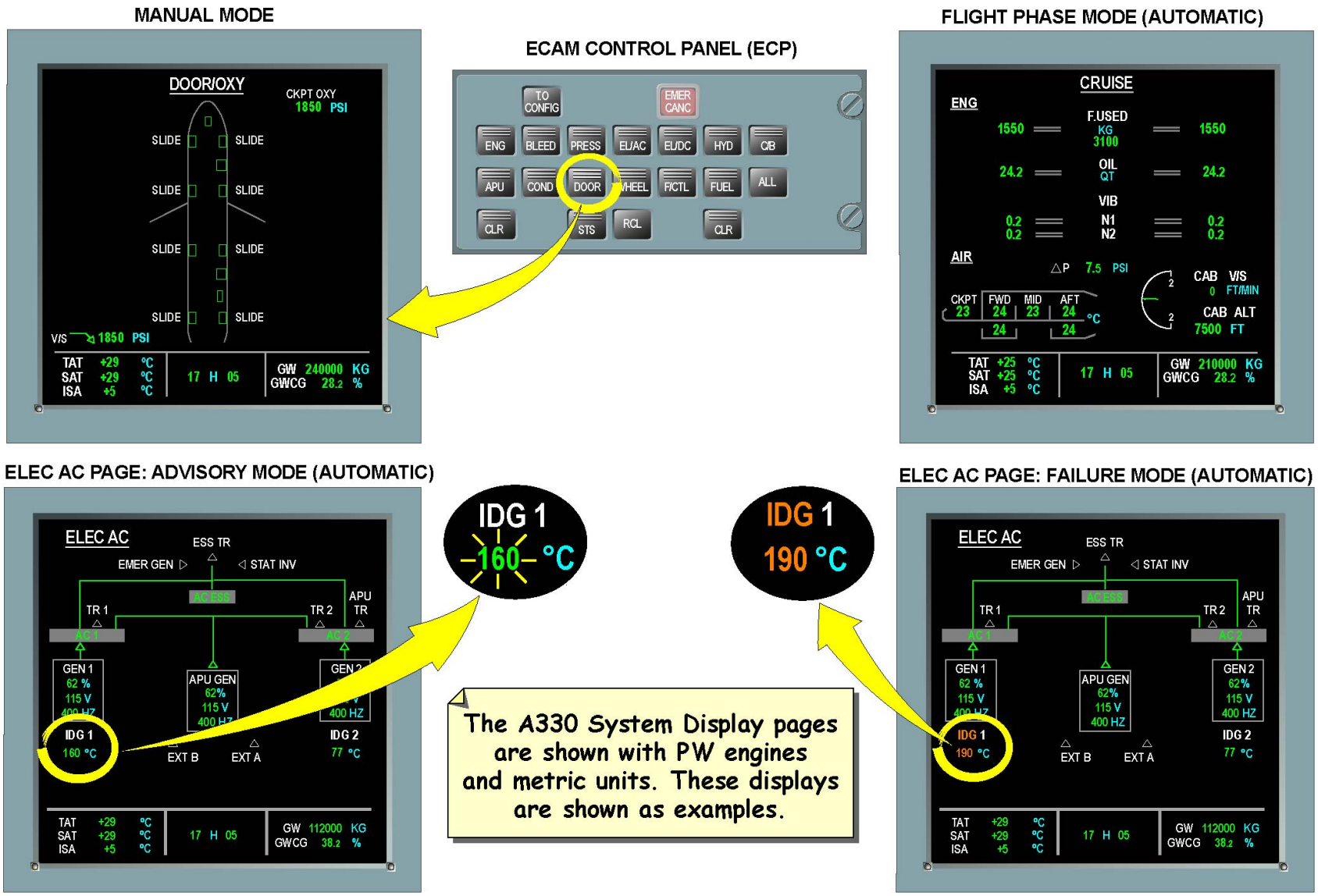

ECAM MODES

G7508471 - G3NT1T0 - FM31DC000000002

EIS ECAM NORMAL & MANUAL MODE GENERAL DESC. (3)

ECAM MODES (continued)

NORMAL MODE

In normal operation the ECAM system pages are displayed according to the current flight phase, this mode is called automatic mode. A flight is divided into 10 phases corresponding to an aircraft configuration change. These flight phases are generated by the FWC and used by the Display Units (DUs) to automatically call up the system pages.

DOOR (phase 1)

The APU or engine pages are displayed in priority if the APU or the engines are started, in any flight phase.
The APU page appears when APU master switch is switched ON. It disappears when APU master switch is switched OFF or the APU RPM is above 95% for 10 seconds.
The DOOR page reappears 10 seconds after the APU is available.

WHEEL (phase 2)

The WHEEL page is displayed only after the engine start has been completed, and the Engine Start switch is returned to the Normal position.
The FLighT ConTroL page replaces the WHEEL page for 20 seconds when either sidestick is moved or when rudder deflection is above 22 degrees.

ENGINE (phase 3,4,5)

During these phases, most warnings are inhibited.
TO INHIBIT is displayed on the right memo area of the EWD.

CRUISE (phase 6)

The CRUISE page appears as soon as the slats are retracted and the engines are not at take off power, provided that the landing gear is retracted. The TO INHIBIT message disappears. The CRUISE page disappears when the landing gear is selected down and ALT below 10000ft.

WHEEL (phase 7,8,9)

During these phases, most warnings are inhibited.
"LDG INHIBIT" is displayed on the right memo area of the EWD.
"LDG INHIBIT" message disappears (flight phase 9).

DOOR (phase 10)

Five minutes after the last engine shutdown the FWC starts a new flight leg at phase 1.

G7508471 - G3NT1T0 - FM31DC000000002

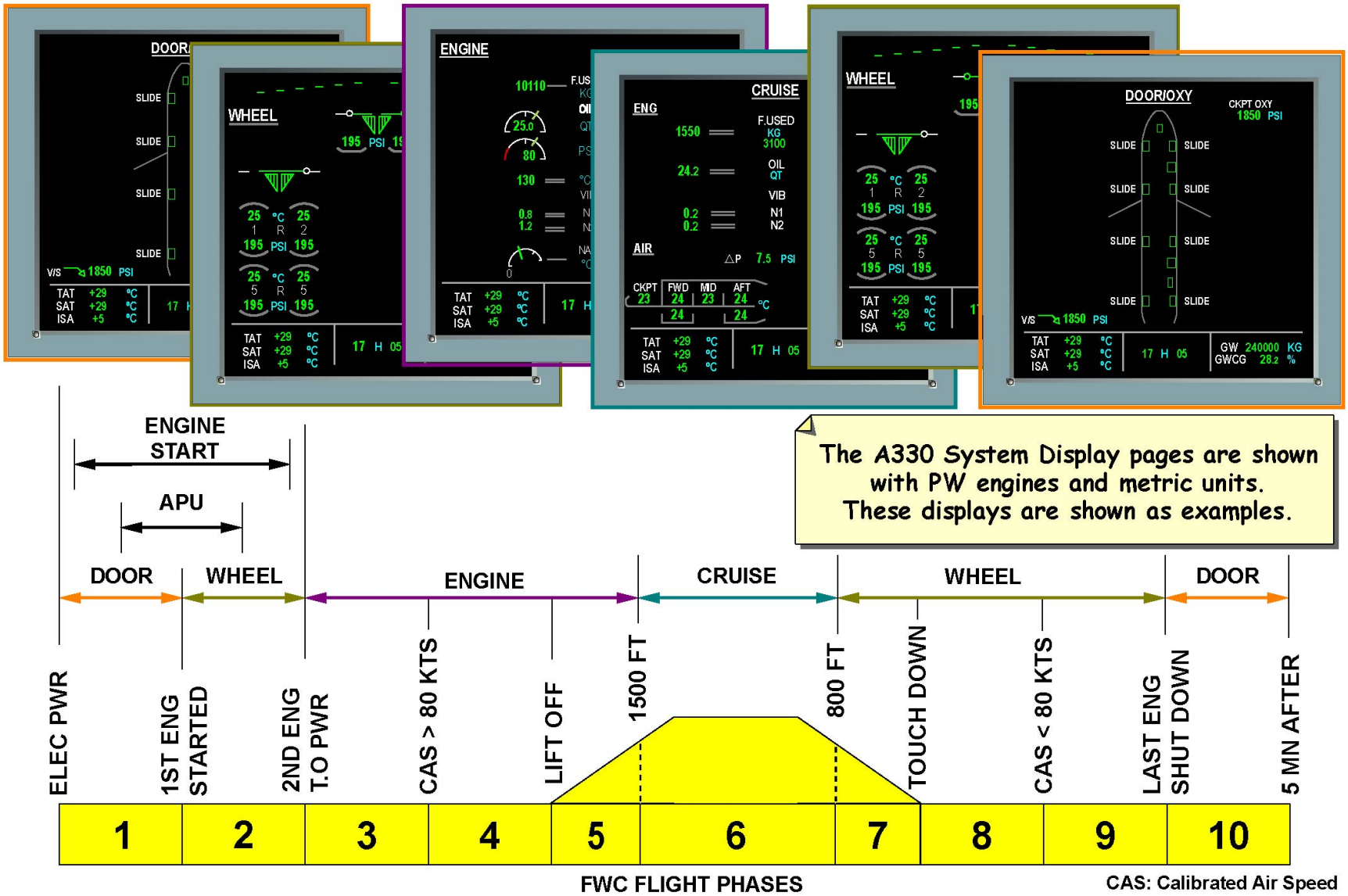

The A330 System Display pages are shown with PW engines and metric units. These displays are shown as examples.

ECAM MODES - NORMAL MODE

G7508471 - G3NT1T0 - FM31DC000000002

EIS ECAM NORMAL & MANUAL MODE GENERAL DESC. (3)

ECAM MODES (continued)

MANUAL MODE

When one of the system key is pressed, the corresponding system page is displayed on the SD and the ECP key light comes on. When the key is pressed a second time, the key light extinguishes, and the page corresponding to the flight phase or current warning is displayed again. In the event of an ECAM control panel failure, due to the built in redundancy, the system pages are still available through the ALL key. When the ALL key is pressed and held, all the system pages are displayed successively at one second of intervals. This key, when pressed repeatedly, will enable the display of the next system page.

G7508471 - G3NT1T0 - FM31DC000000002

ECAM CONTROL PANEL (ECP) (100VU)

SYSTEM DISPLAY (SD)

The DOOR/OXY page is shown with metric units.
This display is shown as an example.

ECAM MODES - MANUAL MODE

EIS ECAM ADVISORY & FAILURE MODE DESCRIPTION (3)

GENERAL

The Flight Warning Computers (FWCs) directly activate the crew attention getters (aural and visual) and send the warning messages to the Display Management Computers (DMCs) for display. These attention getters, located on the glareshield, are the red MASTER WARNing indicator and the amber MASTER CAUTion indicator as well as aural sounds through the loudspeaker.

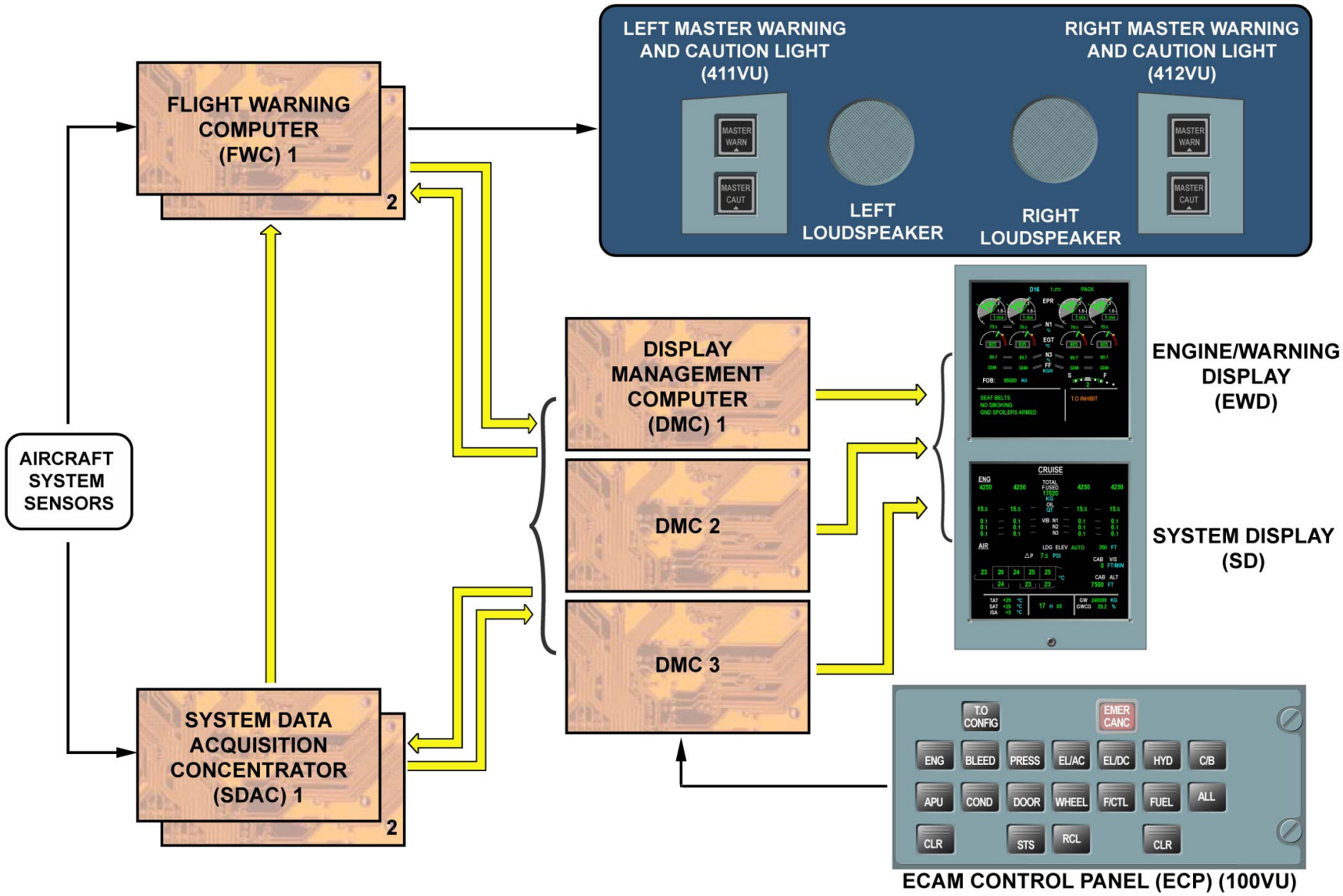

GENERAL

G7508471 - G3NT1T0 - FM31DD000000001

EIS ECAM ADVISORY & FAILURE MODE DESCRIPTION (3)

ECAM ALERT CLASSIFICATION

The alerts are classified in three levels. They depend on the importance and urgency of the corrective actions required.
LEVEL 1: alert advisory, without attention getters.
LEVEL 2: cautions, with attention getters (MASTER CAUT and sound).
LEVEL 3: red warnings, (highest priority), with attention getters (MASTER WARN + sound).
At each level, the alert messages are also classified by priority order. To explain the different levels of the alert classification, we will assume that you are in flight and everything is normal.

G7508471 - G3NT1T0 - FM31DD000000001

Level 3:
Warnings
(HIGHEST PRIORITY)

Level 2:
Cautions
"WITH ATTENTION GETTERS"

Level 1:
Alert advisory
"WITHOUT ATTENTION GETTERS"

ECAM ALERT CLASSIFICATION

G7508471 - G3NT1T0 - FM31DD000000001

EIS ECAM ADVISORY & FAILURE MODE DESCRIPTION (3)

ECAM ALERT CLASSIFICATION (continued)

LEVEL 1: ALERT ADVISORY

This corresponds to a configuration requiring crew monitoring, i.e. mainly failures leading to a loss of redundancy or degradation of a system. These alerts do not trigger any attention getters (visual and audio), but the related messages are displayed in amber on the EWD. The SD will display synoptic of affected system, if any.

G7508471 - G3NT1T0 - FM31DD000000001

Level 1:
Alert advisory
"WITHOUT ATTENTION GETTERS"

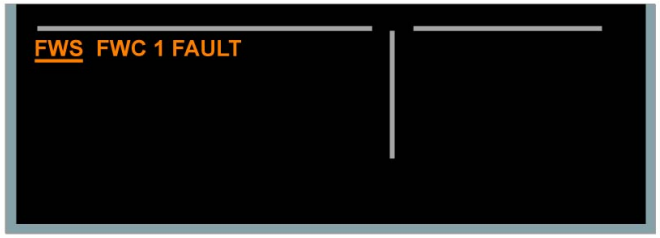

EWD

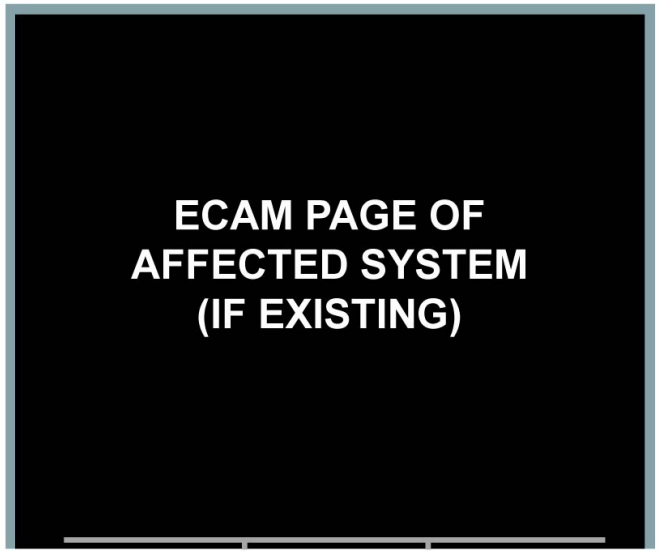

SD

ECAM ALERT CLASSIFICATION - LEVEL 1: ALERT ADVISORY

G7508471 - G3NT1T0 - FM31DD000000001

EIS ECAM ADVISORY & FAILURE MODE DESCRIPTION (3)

ECAM ALERT CLASSIFICATION (continued)

LEVEL 2: CAUTIONS

This corresponds to an abnormal configuration of the aircraft, leading to an immediate crew awareness, but not necessarily an immediate crew corrective action. This level of alert is mainly for system failures, which have no immediate consequences on safety. These cautions are generally associated with a Single Chime (aural alert) and a MASTER CAUT amber light (steady visual alert).

G7508471 - G3NT1T0 - FM31DD000000001

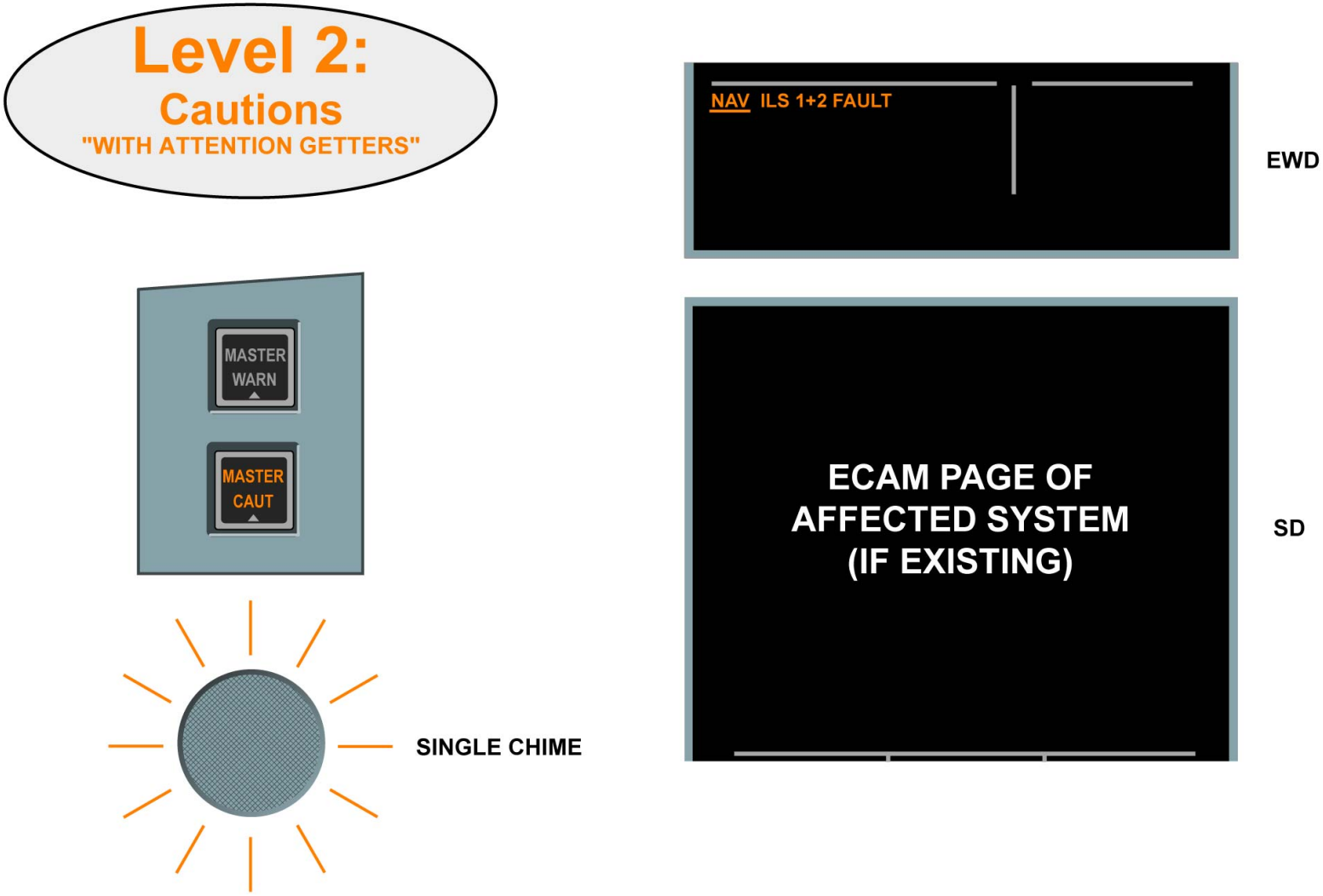

ECAM ALERT CLASSIFICATION - LEVEL 2: CAUTIONS

G7508471 - G3NT1T0 - FM31DD000000001

EIS ECAM ADVISORY & FAILURE MODE DESCRIPTION (3)

ECAM ALERT CLASSIFICATION (continued)

LEVEL 3: WARNINGS (HIGHEST PRIORITY)

A level 3 message corresponds to an emergency configuration, a level 3 alert is triggered with the MASTER WARN flashing lights, a chime associated to the failure and a warning message. The crew must take corrective action.

G7508471 - G3NT1T0 - FM31DD000000001

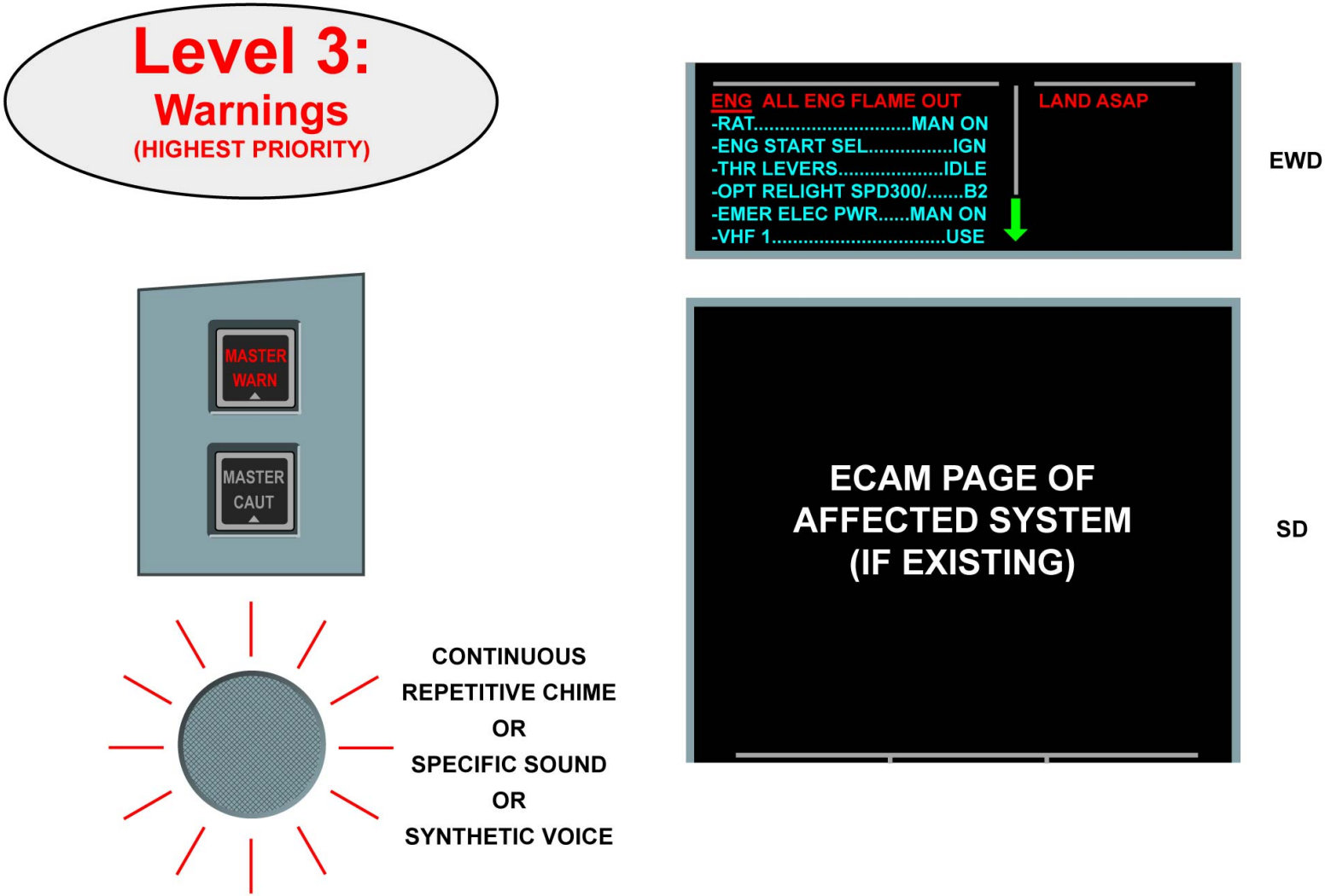

ECAM ALERT CLASSIFICATION - LEVEL 3: WARNINGS (HIGHEST PRIORITY)

EIS ECAM ADVISORY & FAILURE MODE DESCRIPTION (3)

ECAM ALERT CLASSIFICATION (continued)

STATUS MESSAGES

The status page indicates the A/C operational summary after a failure. This information is reported through a list of procedures, limitations and a list of inoperative systems. The status page appears during the normal sequence done by the flight crew to clear the message. It also appears automatically at slat/flap deployment on approach. The status page also presents the name of systems affected by a class 2 fault under the title MAINTENANCE. Those defects require further maintenance action and are also reported through the Central Maintenance System (CMS).

The STATUS page is displayed when the crew presses, on the ECAM Control Panel (ECP):

- the CLR key for the last time after a failure presentation,
- or the STS key.

A white boxed STS reminder on the EWD reminds the crew that the status page is not empty. After engine shutdown, this STS reminder may flash if a class 2 fault (MAINTENANCE) is reported.

G7508471 - G3NT1T0 - FM31DD000000001

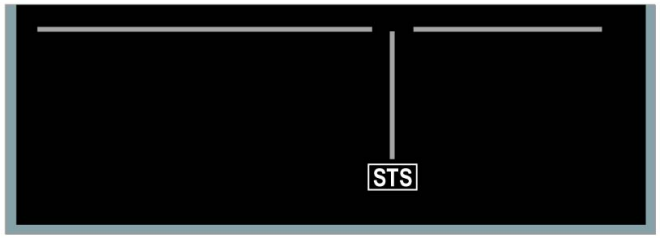

EWD

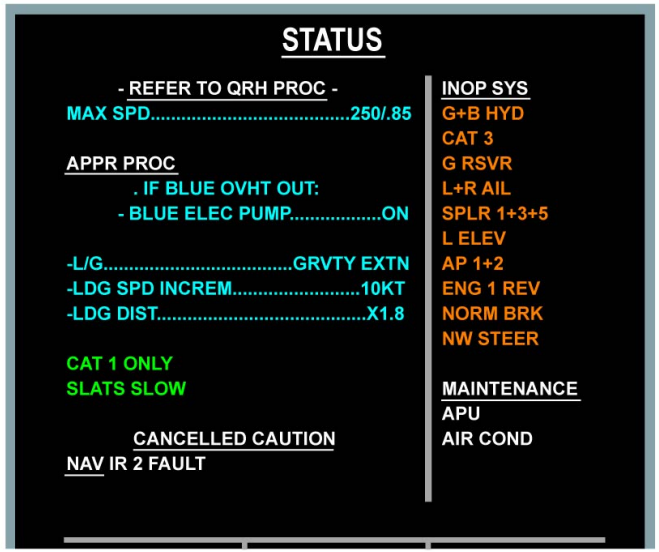

SD

ECAM CONTROL PANEL (ECP) (100VU)

ECAM ALERT CLASSIFICATION - STATUS MESSAGES

EIS ECAM ADVISORY & FAILURE MODE DESCRIPTION (3)

AUDIO SIGNALS

This topic presents the different audio signals generated by the FWC and the manner of cancellation.

G7508471 - G3NT1T0 - FM31DD000000001

SIGNALS	DEFINITION	CANCELLATION
SINGLE CHIME	AMBER CAUTION	AUTOMATIC
CONTINUOUS REPETITIVE CHIME	RED WARNING	EMER CANCEL MASTER WARNING
CAVALRY CHARGE	AP DISCONNECTION	INSTINCTIVE DISCONNECT P/B OR AUTOMATIC OR MASTER WARNING
TRIPLE CLICK	LANDING CAPABILITY CHANGE	AUTOMATIC
CRICKET - STALL	STALL WARNING	EMER CANCEL
BUZZER	CALL (SELCAL OR CABIN)	RESET ON ACP
AUTO CALL OUT	RADIO HEIGHT, HUNDRED ABOVE, MINIMUM, RETARD	
C CHORD	ALTITUDE ALERT	NEW ALTITUDE SELECTION OR MASTER WARNING
WINDSHEAR	WINDSHEAR WARNING	
PRIORITY LEFT and RIGHT	SIDE STICK PRIORITY	AUTOMATIC

AUDIO SIGNALS

G7508471 - G3NT1T0 - FM31DD000000001

EIS ECAM ADVISORY & FAILURE MODE DESCRIPTION (3)

ECAM TYPE OF FAILURE

The failures displayed may be of three different types, without depending on their classification:
- an independent failure,
- a primary failure,
- a secondary failure.

G7508471 - G3NT1T0 - FM31DD000000001

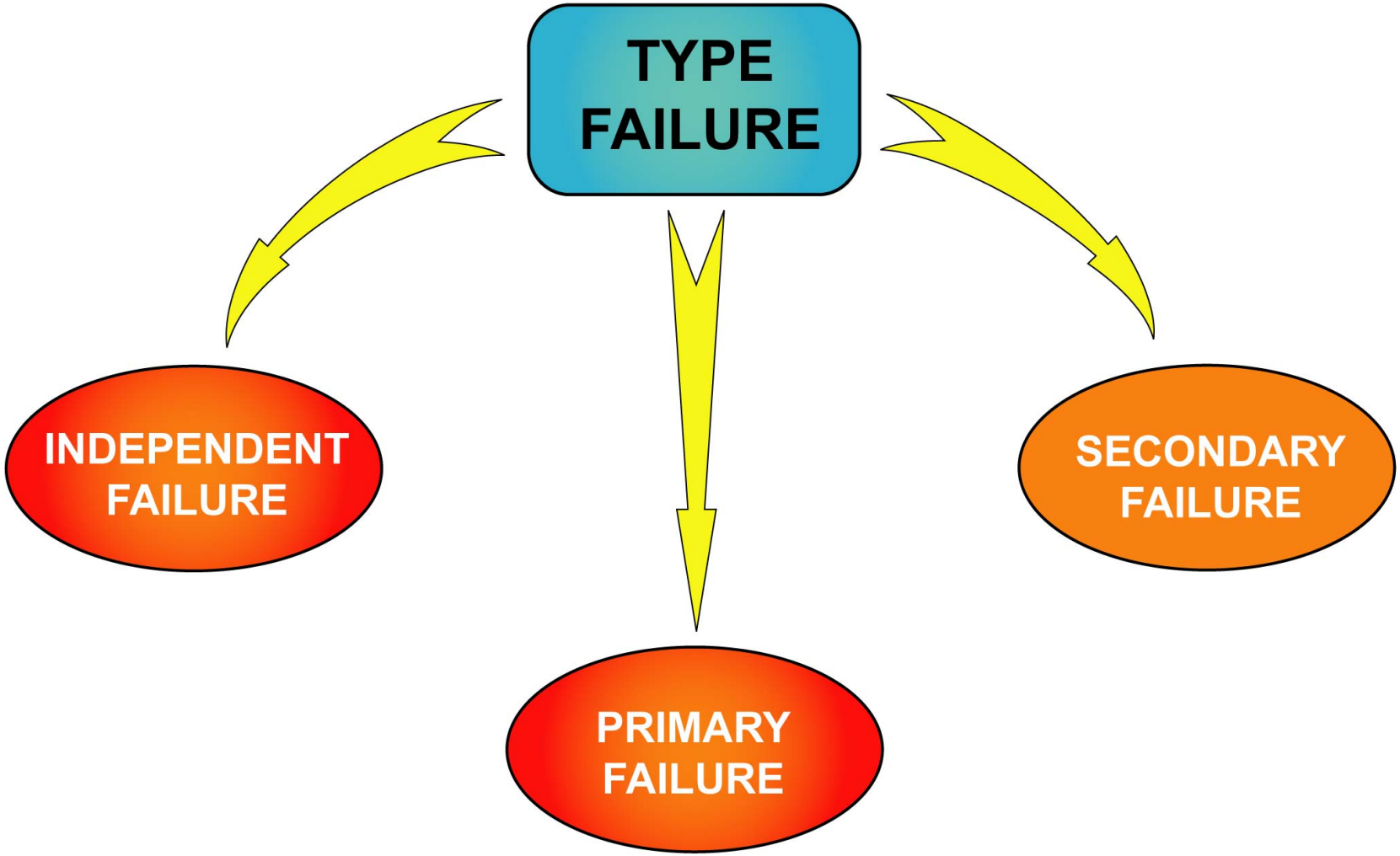

ECAM TYPE OF FAILURE

G7508471 - G3NT1T0 - FM31DD000000001

EIS ECAM ADVISORY & FAILURE MODE DESCRIPTION (3)

ECAM TYPE OF FAILURE (continued)

INDEPENDENT FAILURE

When a warning appears as an independent failure, it is a failure, which affects an isolated system or a piece of equipment without affecting another one. For example: a FWC 1 failure.

G7508471 - G3NT1T0 - FM31DD000000001

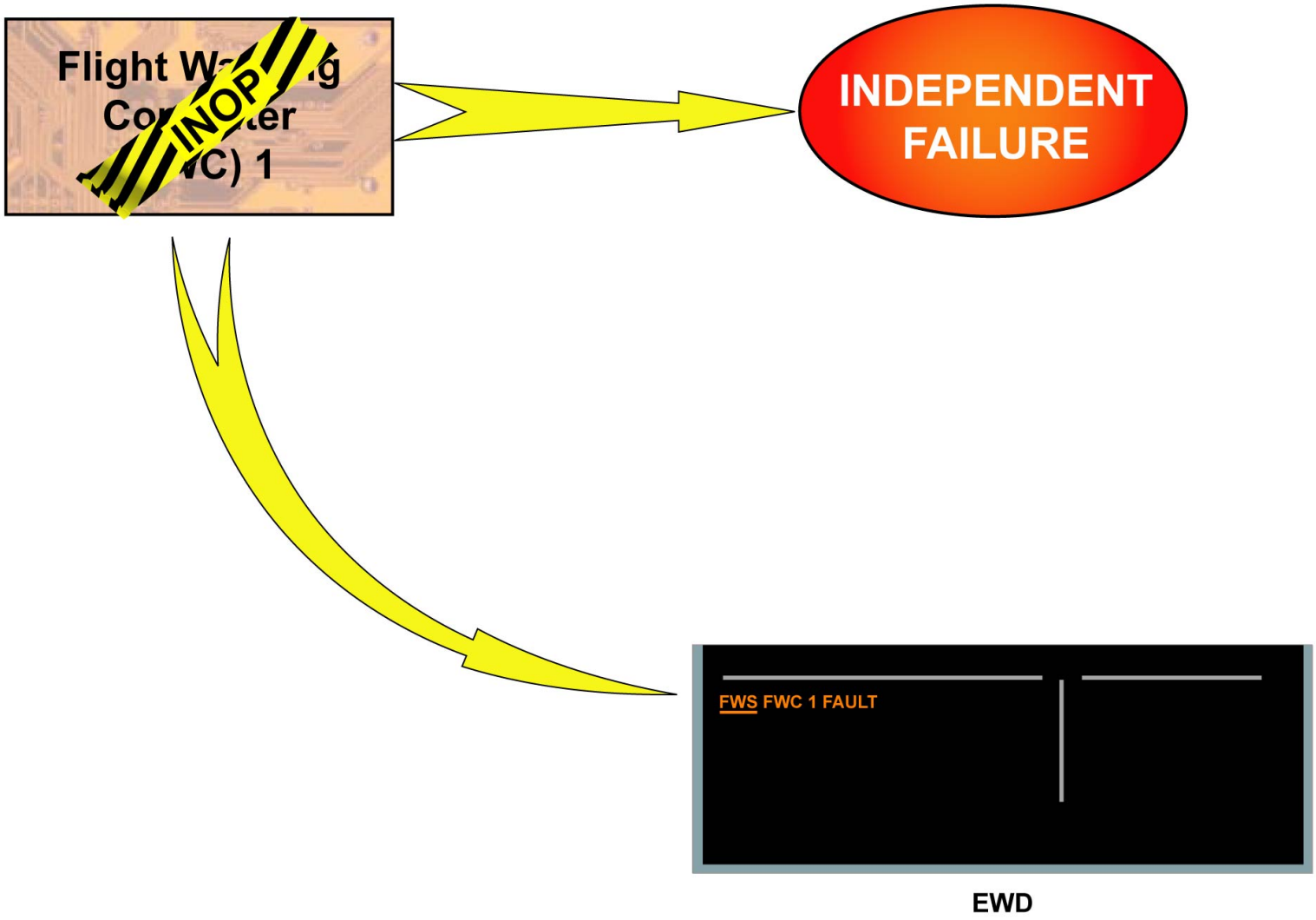

ECAM TYPE OF FAILURE - INDEPENDENT FAILURE

G7508471 - G3NT1T0 - FM31DD000000001

EIS ECAM ADVISORY & FAILURE MODE DESCRIPTION (3)

ECAM TYPE OF FAILURE (continued)

PRIMARY FAILURE

A primary failure is a failure of a system or a function which affect other systems or equipment. For example, the green hydraulic system failure leads to the loss of a pair of spoilers. Note that a primary failure is displayed with a box around the failure in red or amber.

G7508471 - G3NT1T0 - FM31DD000000001

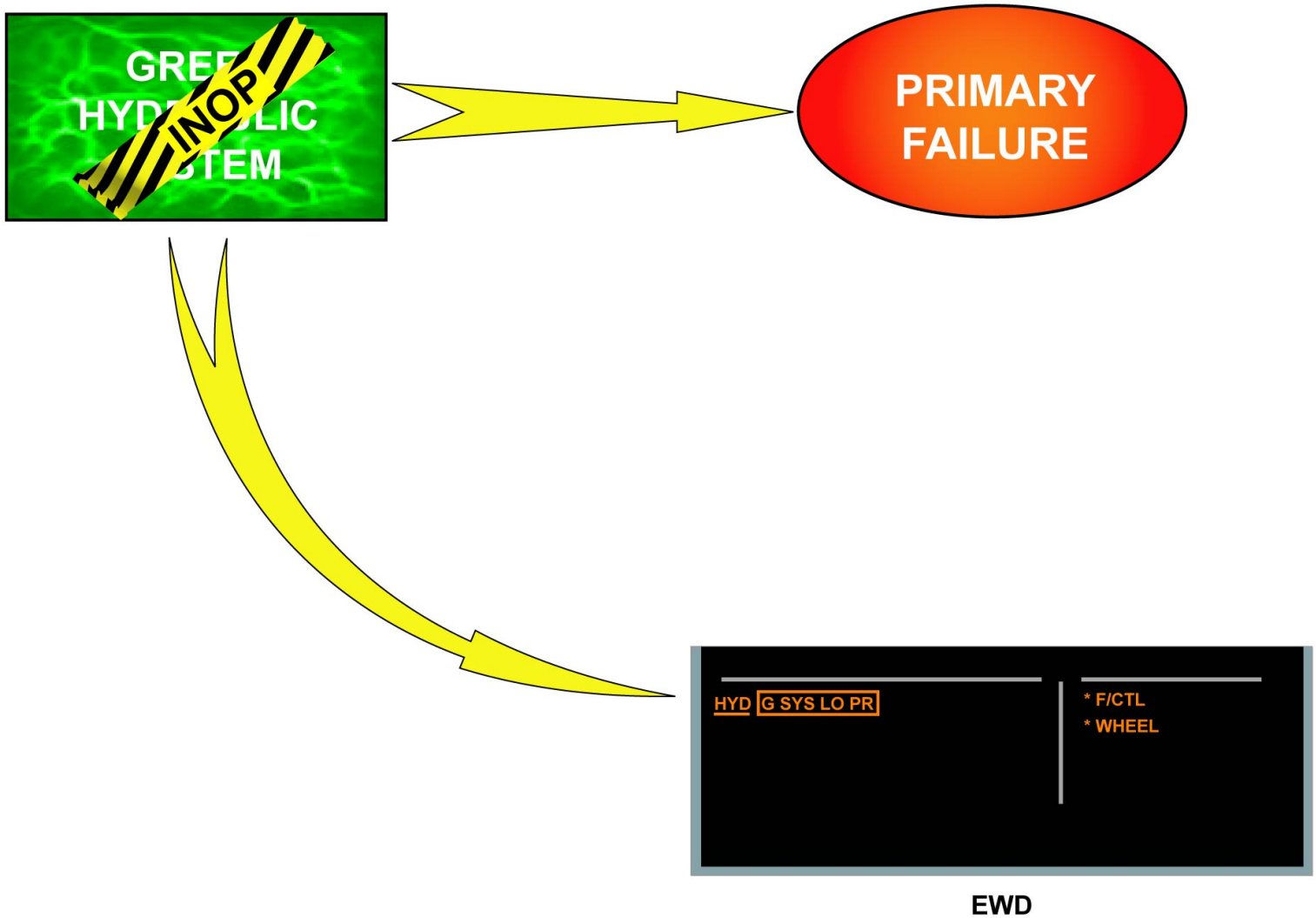

ECAM TYPE OF FAILURE - PRIMARY FAILURE

G7508471 - G3NT1T0 - FM31DD000000001

EIS ECAM ADVISORY & FAILURE MODE DESCRIPTION (3)

ECAM TYPE OF FAILURE (continued)

SECONDARY FAILURE

A secondary failure is the loss of a system or an item of equipment resulting from a primary failure: for example, the loss of a pair of spoilers following the loss of the green hydraulic system (hydraulic system deactivation). The titles of the system pages related to the secondary failures are indicated on the lower right part of the EWD. They are displayed in amber with an asterisk. Note that this right part can also be used if necessary to display heading titles of warnings if the left part of the EWD is full.

G7508471 - G3NT1T0 - FM31DD000000001

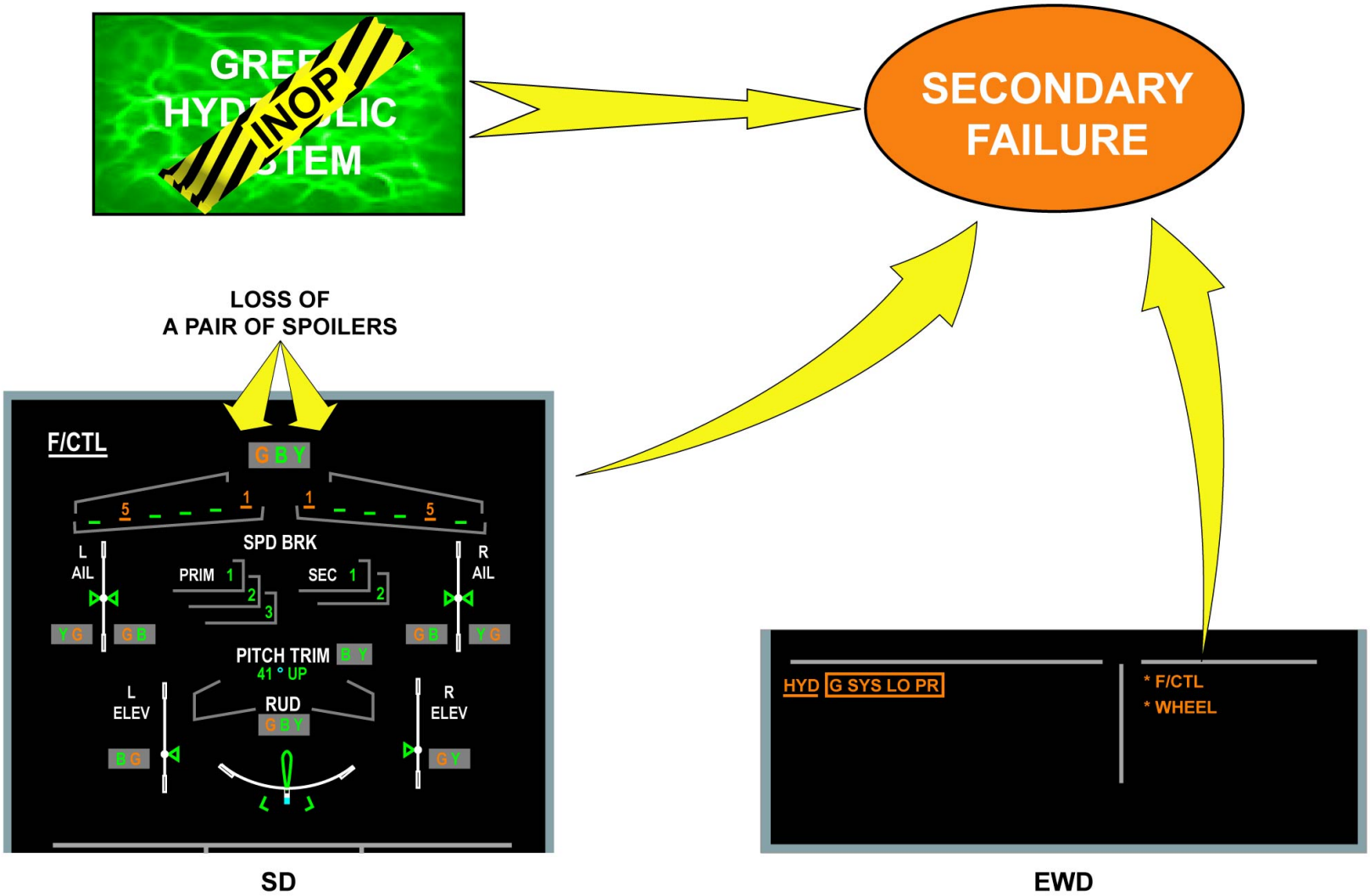

ECAM TYPE OF FAILURE - SECONDARY FAILURE

EIS ECAM ADVISORY & FAILURE MODE DESCRIPTION (3)

ECAM ADVISORY AND FAILURE MODE

DUAL DISPLAY MODE

The advisory mode lets the value of some critical system parameters be monitored, and by getting the flight crew attention onto the drifting parameter.
When the value drifts from its normal range, the related ECAM page is displayed automatically, the affected parameter pulses and a white ADV message pulses at the bottom of the EWD.
For example, the cabin altitude increases above its normal value, but is still well below the threshold of the warning. The CAB PRESS page appears automatically with a pulsing value for the cabin altitude. In this case the crew may revert to manual pressure control and prevent warning activation.

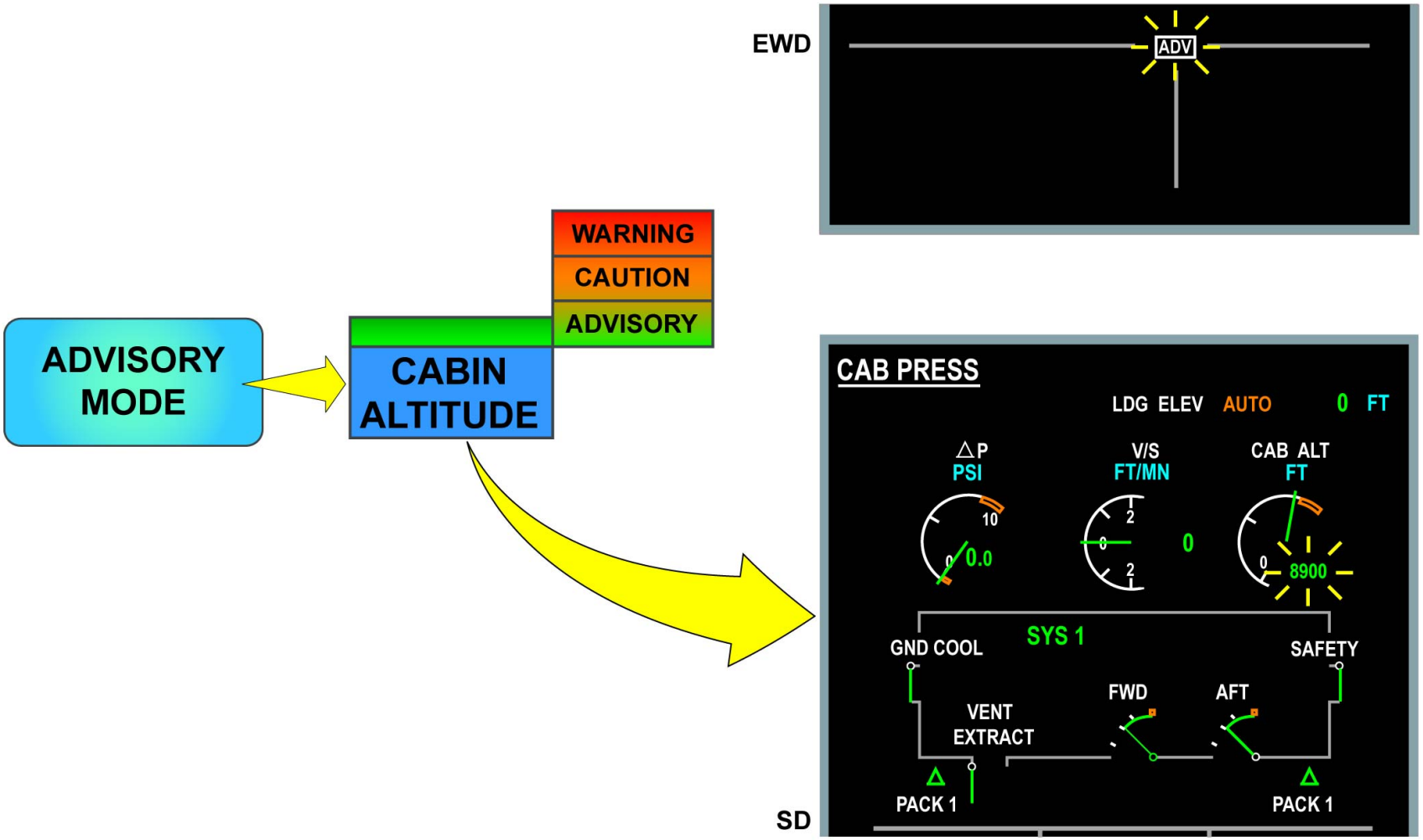

ECAM ADVISORY AND FAILURE MODE - DUAL DISPLAY MODE

EIS ECAM ADVISORY & FAILURE MODE DESCRIPTION (3)

ECAM ADVISORY AND FAILURE MODE (continued)

SINGLE DISPLAY MODE

In single display mode (one ECAM Liquid Crystal Display (LCD) unit remaining), a white ADV message pulses at the bottom of the EWD to attract crew attention. The related system page cannot be displayed automatically on the SD. The pilot has to push and hold the related system flashing key on the ECP to check the system on the ECAM page.

G7508471 - G3NT1T0 - FM31DD000000001

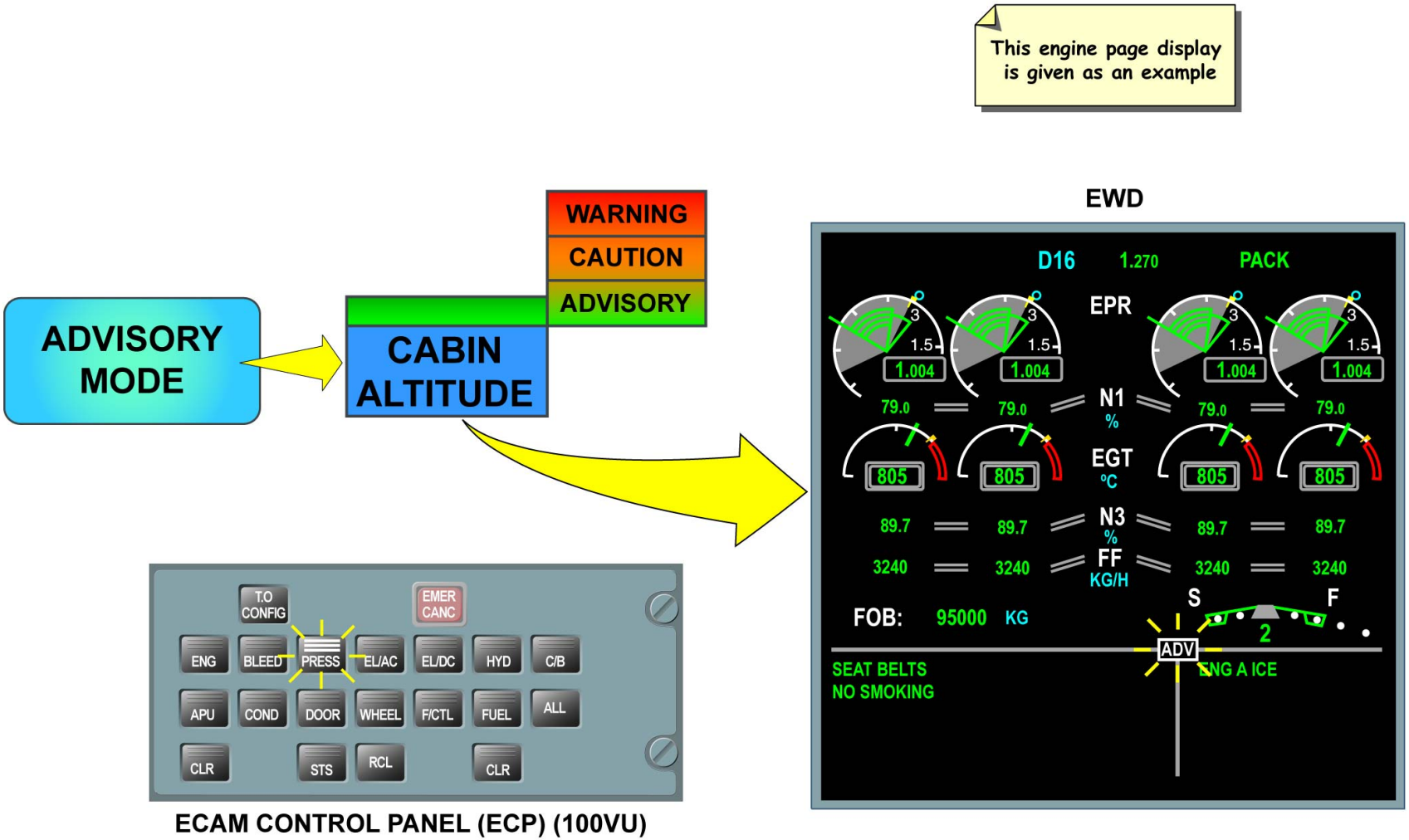

ECAM ADVISORY AND FAILURE MODE - SINGLE DISPLAY MODE

EIS ECAM ADVISORY & FAILURE MODE DESCRIPTION (3)

ECAM OPERATIONS ENGINEERING BULLETIN

When a warning and/or a status is affected by an Operating Engineering Bulletin, a message is displayed to remind the crew that an Operating Engineering Bulletin exists and that they must refer to the Quick Reference Handbook to get access to the correct procedure.

G7508471 - G3NT1T0 - FM31DD000000001

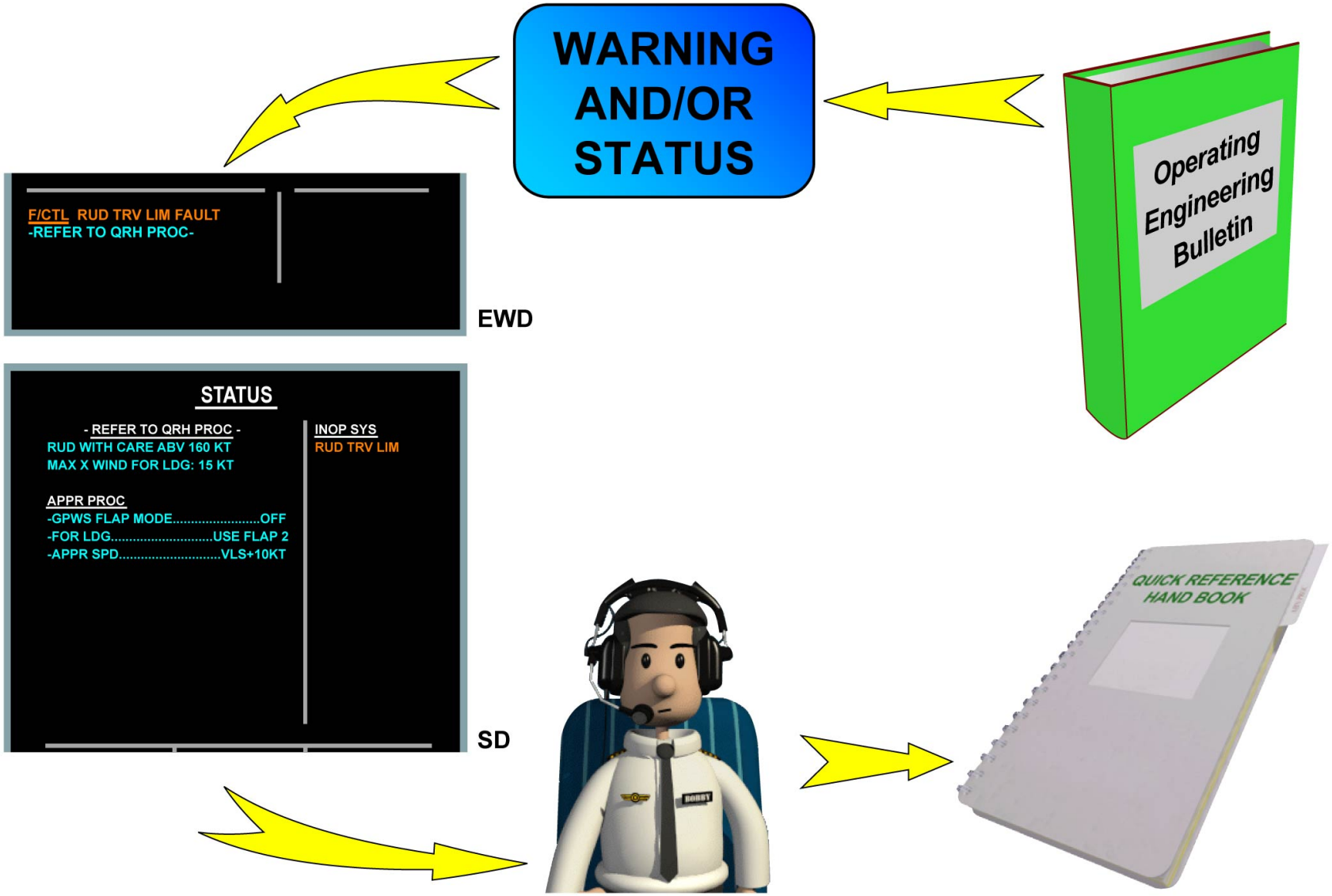

ECAM OPERATIONS ENGINEERING BULLETIN

EIS D/O (3)

GENERAL

The EIS interface architecture is designed to cope with REDUNDANCY/SEGREGATION/RECONFIGURATION requirements which give advantages such as:
- no operational degradation in case of failure of an EIS Line Replaceable Unit (LRU),
- reliable presentation on Display Units (DUs) of aircraft system configuration,
- easy failure recovery procedures.

The EIS architecture is designed around 6 identical Liquid Crystal Display (LCD) units and 3 Data Management Computers (DMCs). For the ECAM part, the systems data are processed through 2 System Data Acquisition Concentrators (SDACs) and 2 Flight Warning Computers (FWCs).

G7508471 - G3NT1T0 - FM31D200000002

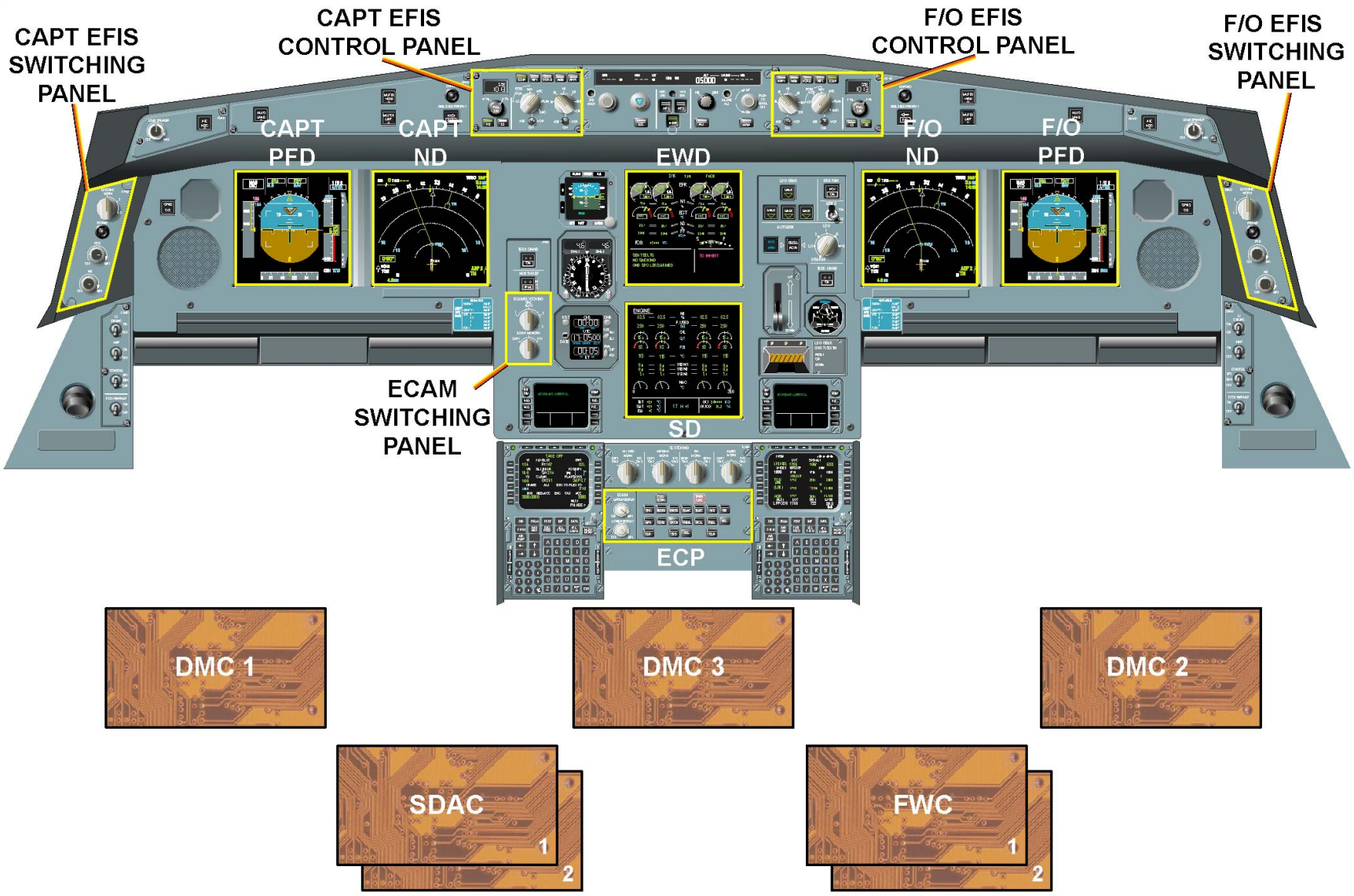

GENERAL

G7508471 - G3NT1T0 - FM31D200000002

EIS D/O (3)

GENERAL (continued)

SDAC

The two SDACs are identical and interchangeable.
They fulfill three main functions:
- data acquisition,
- data concentration,
- data digitization.

The two SDACs acquire, concentrate, digitize and send, to the three DMCs, all the aircraft system signals necessary to be displayed on the ECAM SD. The SDACs acquire, from the aircraft systems, the malfunction and the failure data corresponding to caution situations and send them to the FWCs. The FWCs then process and generate corresponding alert and procedure messages. All the signals (discrete, analog, digital) entering the SDAC are concentrated and converted into digital format (ARINC 429). The SDAC operational software is contained in a specific device called the On Board Replaceable Module (OBRM).

FWC

The two FWCs are identical and interchangeable.
They fulfill three main functions:
- data acquisition,
- data warning computation corresponding to warning situations,
- flight phase computation.

The FWCs also generate aural alerts as well as synthetic voices for radio height, automatic call out and other audible announcements. They are sent to the Audio Management Unit (AMU) for broadcasting by the cockpit loudspeakers. Each FWC generates all texts and messages to be displayed on the ECAM DUs. These messages are system and warning titles, procedures associated with the warnings, status and memos. The FWCs acquire failure data for the red warnings. Those data are acquired directly from the aircraft systems and do not involve the SDACs. The FWCs are also tasked with the acquisition of SDAC DATA BUSES, generating the text for a caution message and providing the associated attention getter.
Each FWC sends a copy of its own acquisition through the ARINC 429 bus to the opposite FWC for redundancy.
The FWC outputs are:
- discrete for visual attention getters,
- discrete and analog for audio signals,
- ARINC 429 FWC DATA BUS (Central Maintenance Computers (CMCs)/Flight Data Interface and Management Unit (FDIMU)),
- ARINC 429 FWC MESSAGE BUS.

The FWC operational software is contained into 2 OBRMs. Each FWC includes a BITE to detect the failures for maintenance operations.

G7508471 - G3NT1T0 - FM31D200000002

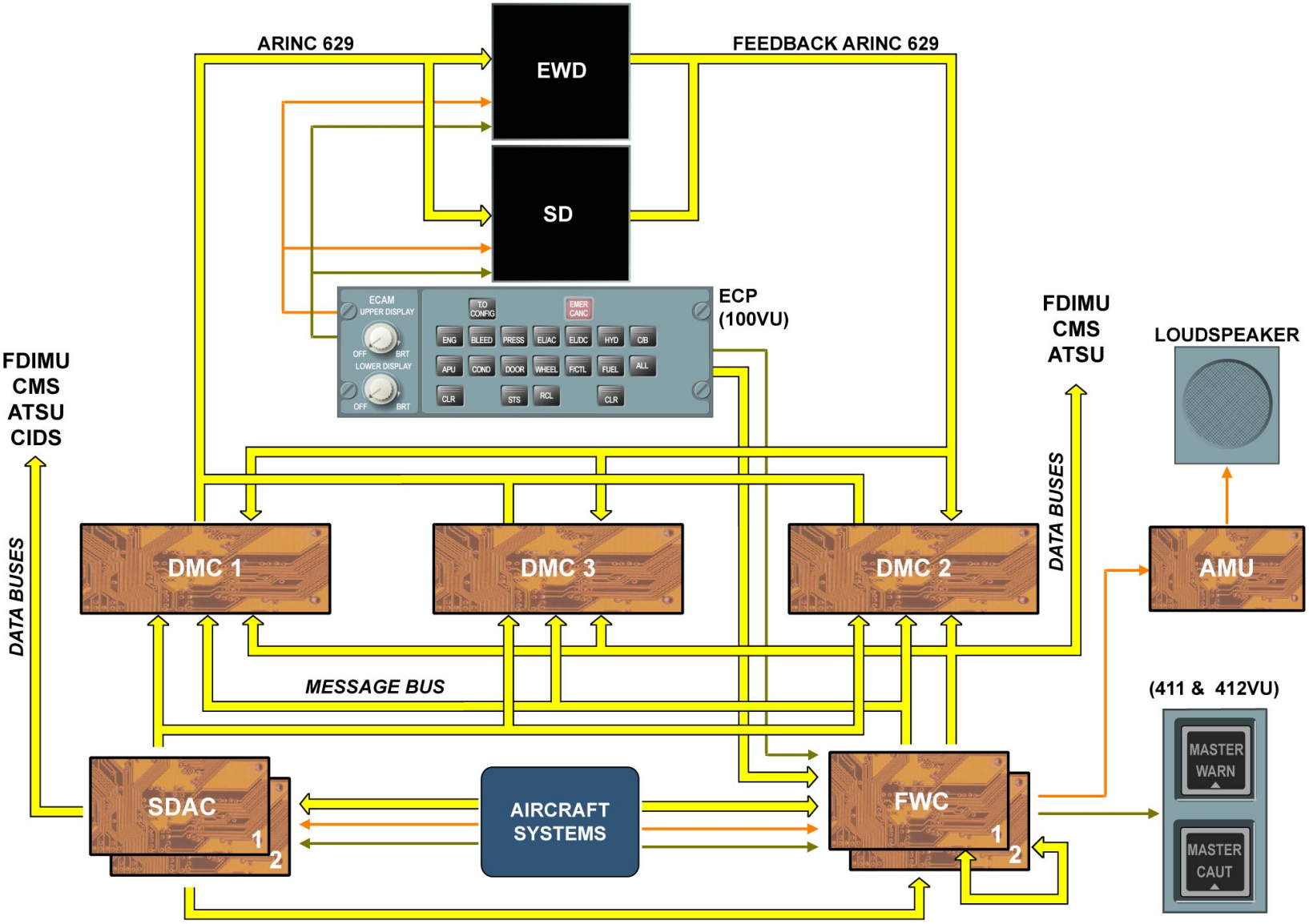

GENERAL - SDAC & FWC

EIS D/O (3)

GENERAL (continued)

DMC

The 3 DMCs are identical and interchangeable. They acquire and process signals received from the aircraft systems or through the SDACs and FWCs for the computation of the different EFIS and ECAM displays.
Each DMC receives the same type of data from the aircraft systems, SDACs and FWCs through ARINC 429 buses. It receives ARINC 453 for RADAR/Enhanced Ground Proximity Warning System (EGPWS) data, RS 232 (shop test) and discrete signals for DU reconfiguration.
The DMC then transmits the data to all DUs through an ARINC 629 bus. Each DU acquires data that is useful for its function either EFIS or ECAM.
For DU feedback, each DU transmits to the three DMCs through an ARINC 629 return bus:
- an acknowledge signal,
- critical parameter feedback,
- a DU failure information.

The DMCs also provide ARINC 429 output buses for the FWCs, CMCs, FDIMU, ECAM Control Panel (ECP) and EFIS control panel.
Each DMC has a BITE for itself and for its connected DUs for maintenance operations.

DISPLAY UNITS

The EIS system has 6 back-lighted LCD units, which are identical and interchangeable. The LCD units are SMART displays, this means that each display contains its own processing capability in order to compute and to generate the required image to display on the PFD, ND, EWD or SD. Each LCD units receives and processes data through an ARINC 629 High Speed (HS) bus from the 3 DMCs and through an ARINC 453 for weather radar (WXR) and EGPWS (BITMAP images) data from DMC1 and 2. In addition, the PFD CAPT, PFD F/O, and SD units are connected to the Camera Interface Unit (CIU) and display function for the Taxiing Aid Camera System (TACS).
The TACS is installed on A340-600, and optionally on A340-500.
The RS 232 interface is used for TACS software test.
The interface with the EFIS switching panel for failure recovery and redundancy is done by discrete and analog signals. In turn the LCD units send back to the DMC and to the monitoring DUs critical parameter feedback via ARINC 629 bus.

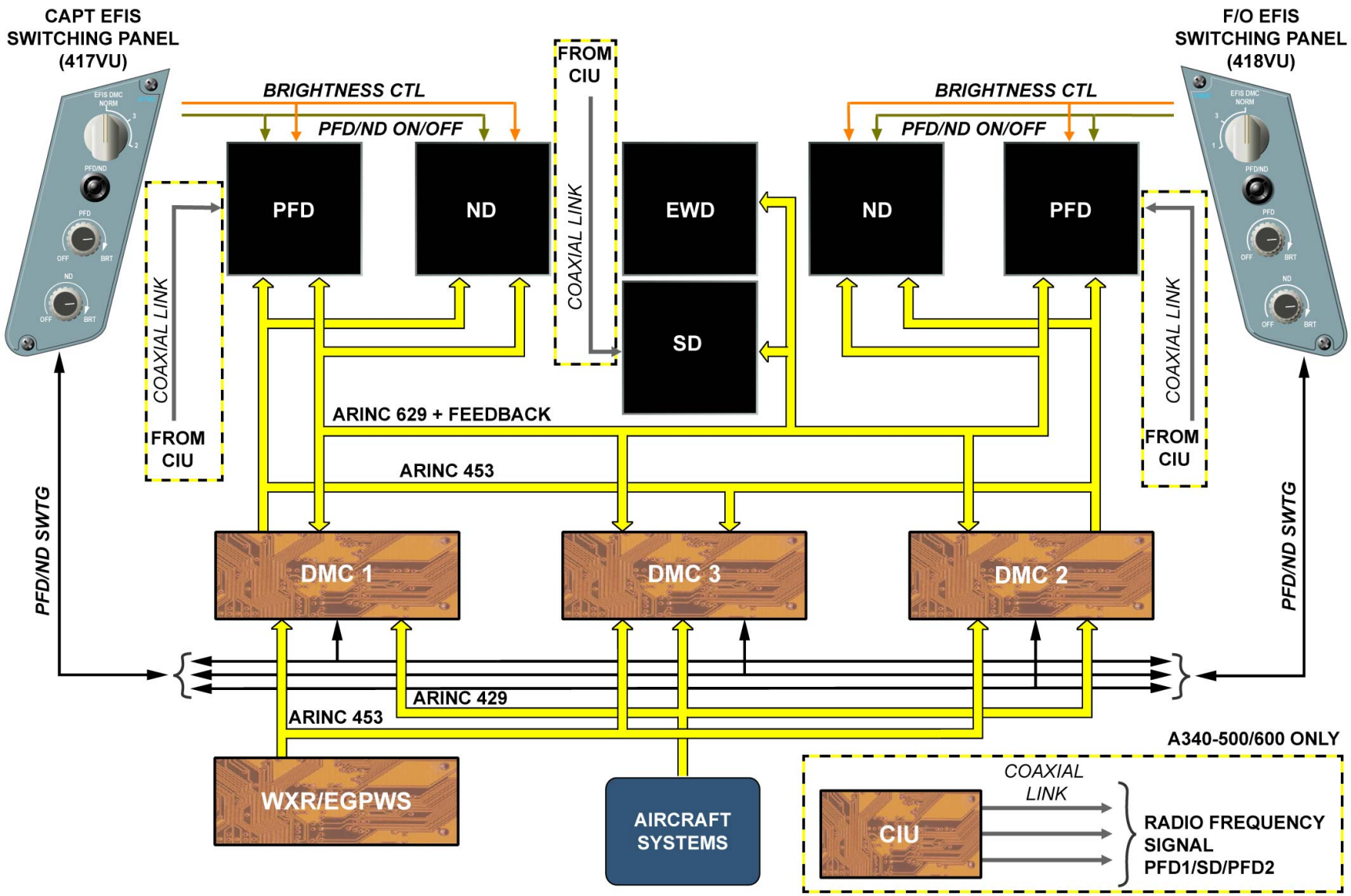

GENERAL - DMC & DISPLAY UNITS

G7508471 - G3NT1T0 - FM31D200000002

EIS D/O (3)

GENERAL (continued)

FEEDBACK MONITORING FUNCTION

The feedback monitoring function is made by the DU. Each DU monitors 2 images as follows:
- CAPT PFD image is monitored by EWD and F/O ND,
- CAPT ND image is monitored by EWD and F/O PFD,
- F/O PFD image is monitored by SD and CAPT ND
- F/O ND image is monitored by SD and CAPT PFD,
- EWD image is monitored by CAPT and F/O PFDs,
- SD image is monitored by CAPT and F/O NDs.

On the graphic, the feedback monitoring function is illustrated for CAPT PFD image only. For these critical parameters, e.g. attitude, altitude, heading, the data processed in the monitored DU are sent to the 2 monitoring DUs through the DMCs. The feedback value is sent to the other DUs for comparison with the originating sensor values and when a discrepancy is detected the monitoring DU displays an amber message (ie.CHECK CAPT PFD) and triggers a warning to generate on the FWC. When this message is triggered, it is stored in the DU BITE zone but not transmitted to DMCs.

G7508471 - G3NT1T0 - FM31D200000002

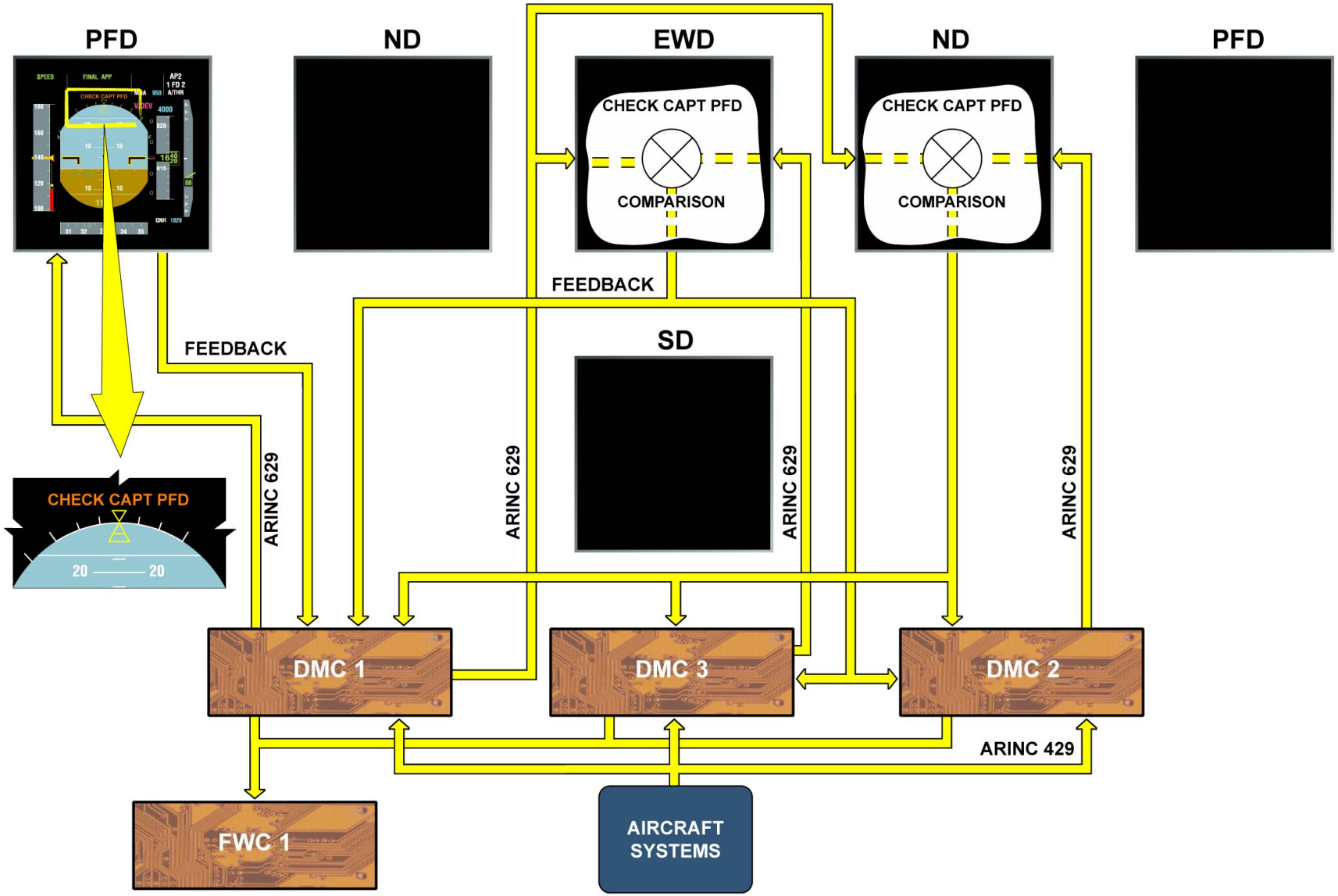

GENERAL - FEEDBACK MONITORING FUNCTION

EIS D/O (3)

GENERAL (continued)

DMC/DU SOFTWARE TELE-LOADING

The tele-loading function is used in order to update the software in the DMCs and in the DUs. This function is divided into 3 sub-functions:
- tele-loading from the Multipurpose Disk Drive Unit (MDDU) or a portable data loader into a DMC (uploading procedure),
- tele-loading from a DMC to the 6 DUs at the same time through the MCDU (DU cross-loading procedure) and,
- tele-loading from a DMC to another DMC through the MCDU (DMC cross-loading procedure).

LCD unit software updating can be done by either DMC. Normally, DMC 1 is used to update CAPT EFIS, DMC 2 for F/O EFIS and DMC 3 for ECAM. Alternatively, any DMC can also be used following appropriate switching. DMC software updating can be performed by either uploading software from MDDU to DMC 1 and then cross-loaded to DMC 2 or DMC 3, or cross-loading software to/from an opposite DMC. The cross-loading function is made through ARINC 629 buses. The DMCs and DUs software comprise the combination of the pin programs. In this example, the 3 different tele-loading sub-functions are shown.

G7508471 - G3NT1T0 - FM31D2000000002

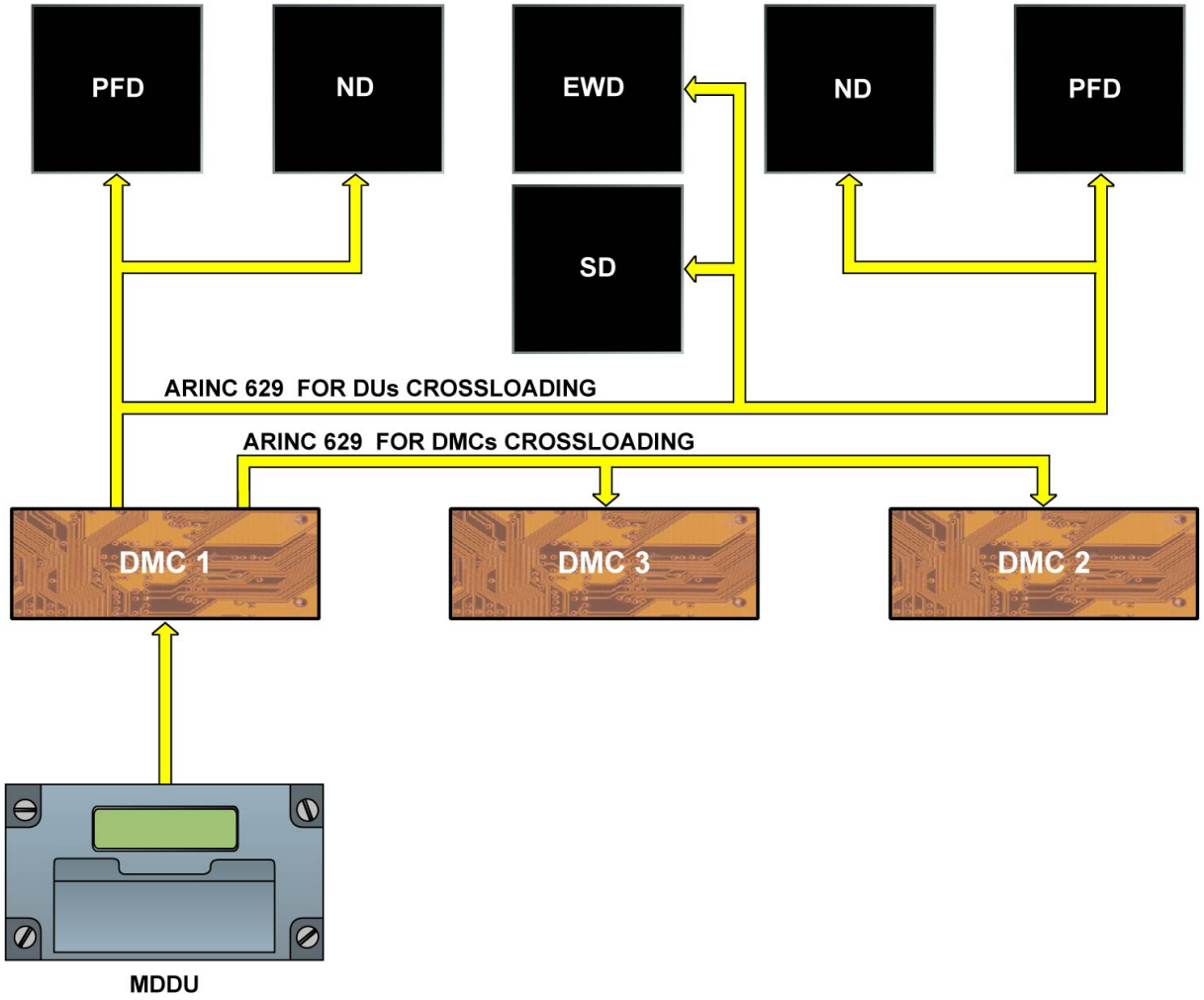

GENERAL - DMC/DU SOFTWARE TELE-LOADING

G7508471 - G3NT1T0 - FM31D200000002

EIS D/O (3)

CONTROL PANELS

The following control panels control and operate the EIS.

EFIS CONTROL PANEL

The EFIS control panels, which are part of the Flight Control Unit (FCU), are linked to the DMCs by ARINC 429 buses. The CAPT EFIS control panel supplies DMC1 and DMC3, whereas the F/O EFIS control panel supplies DMC2 and DMC3.

ECAM CONTROL PANEL

The ECP transmits the pilot selections to the FWCs and DMCs via a low speed ARINC 429 bus. It receives the DMC data in order to diplay the relevant system page. Some of the ECP outputs are discrete for redundancy purposes. They are the CLeaR, ReCaLl, STatuS and EMERgency CANCEL keys and are hardwired to the FWCs. The ALL key is hardwired to the DMCs. The ECP is also linked to the DUs brightness control.

WARNING AND CAUTION SIGNALS

Both Master Warning and Master Caution lights are controlled by each FWC.
The AMU receives audio signals from the FWC and sends the audios signals to the cockpit loudspeakers.

G7508471 - G3NT1T0 - FM31D200000002

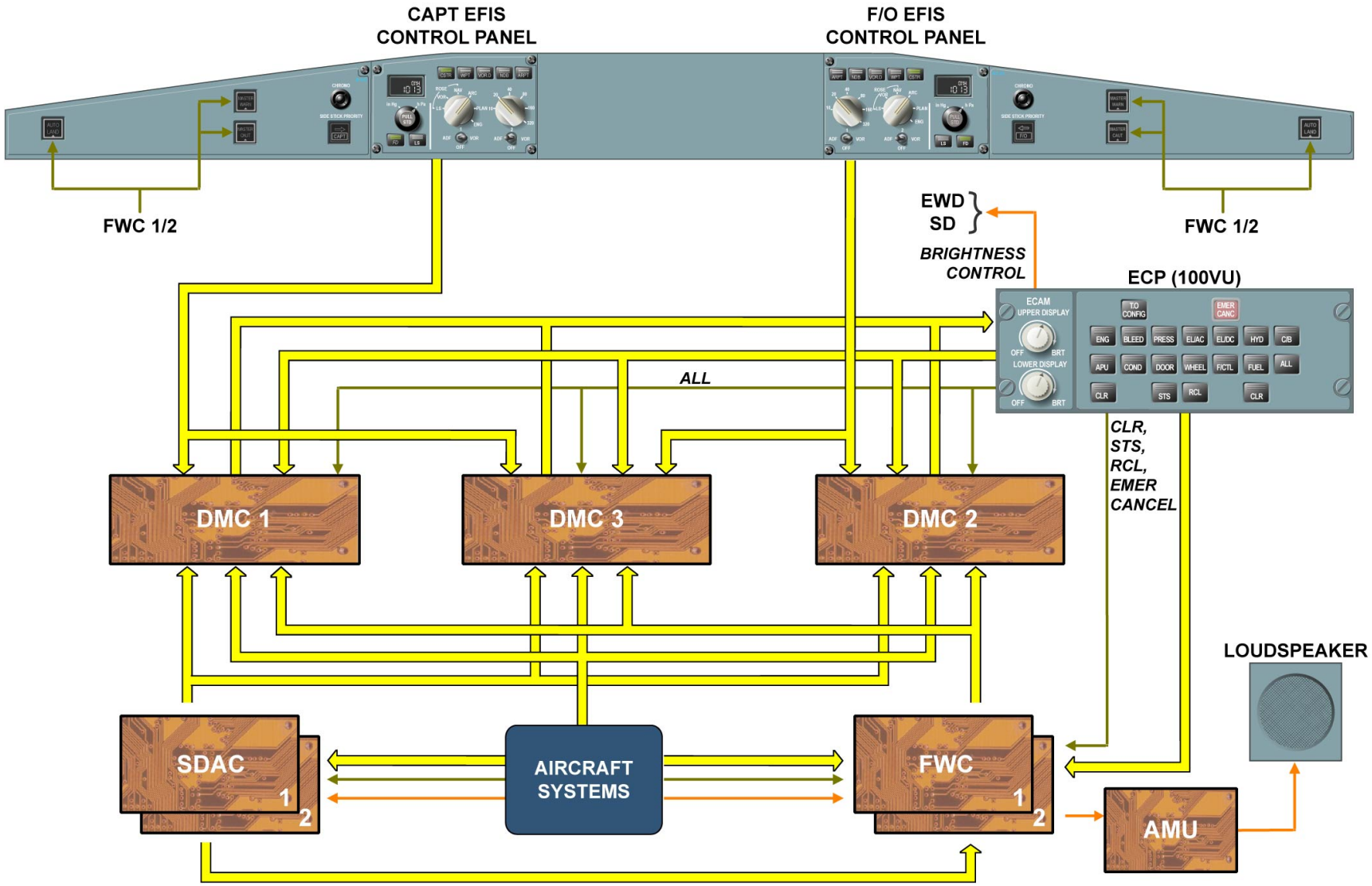

CONTROL PANELS - EFIS CONTROL PANEL ... WARNING AND CAUTION SIGNALS

EIS D/O (3)

EIS SWITCHING

The reconfiguration function is achieved by a set of external relays, separated from the DMCs and the DUs. Additional switching devices and software are implemented within the DMCs and the DUs. These reconfigurations can be done manually or automatically.

EFIS OUTPUT BUS

The switching of the EFIS output bus connected to the systems is controlled by the EFIS DMC rotary selectors and a set of two relays. For each side, the selected DMC transmits the information on the bus to the FWCs, CMCs and FDIMU.

G7508471 - G3NT1T0 - FM31D200000002

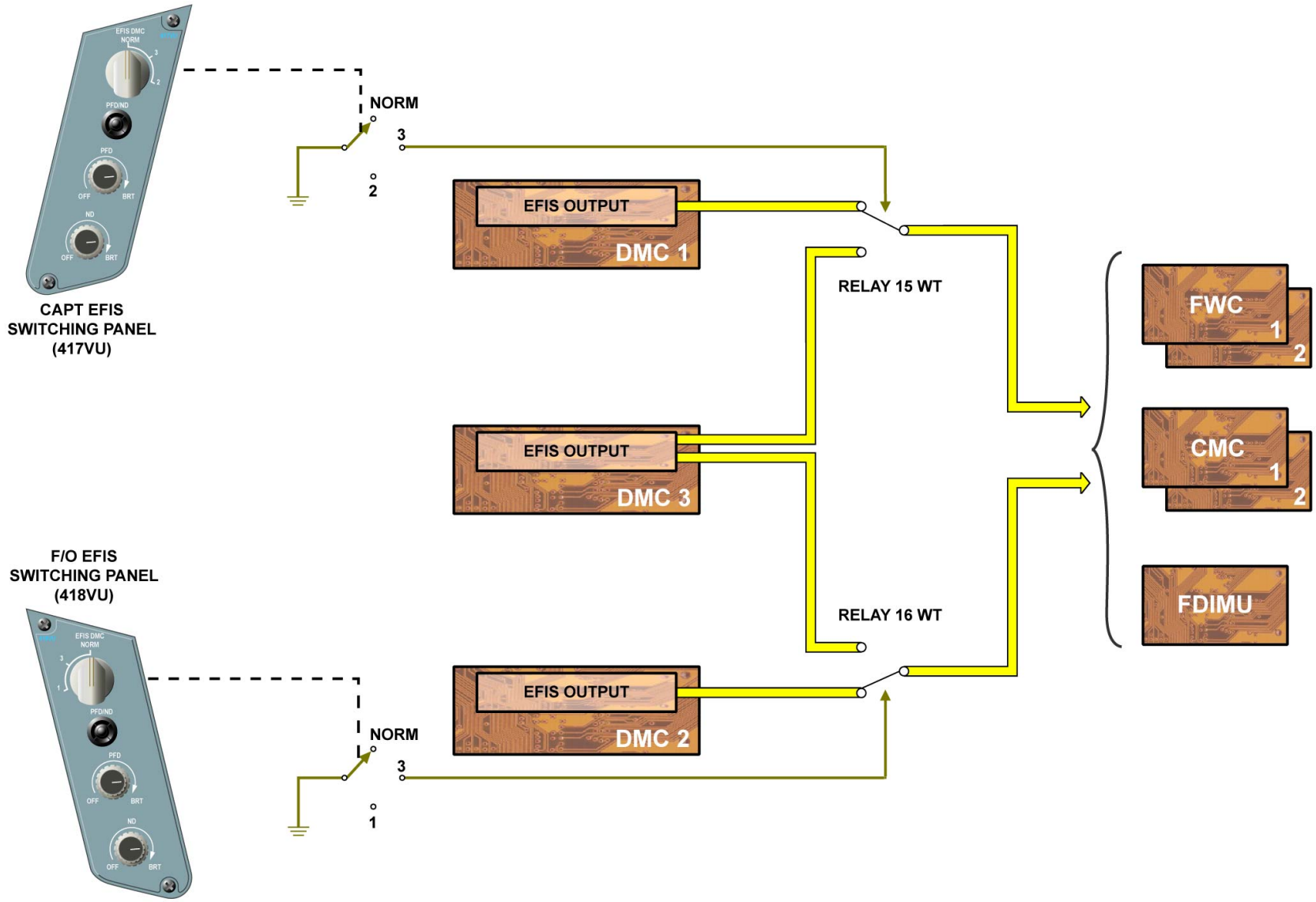

EIS SWITCHING - EFIS OUTPUT BUS

G7508471 - G3NT1T0 - FM31D200000002

EIS D/O (3)

EIS SWITCHING (continued)

ECAM OUTPUT BUS

There are two ECAM output buses connected to other systems.
One of the output buses is connected directly to the FDIMU from ECAM DMC1.
The switching of the second bus is done by a set of two relays controlled by the DMC ECAM switching rotary selector.
The active DMC transmits data on the bus to the FWCs, CMCs, ECP, and FDIMU.

G7508471 - G3NT1T0 - FM31D200000002

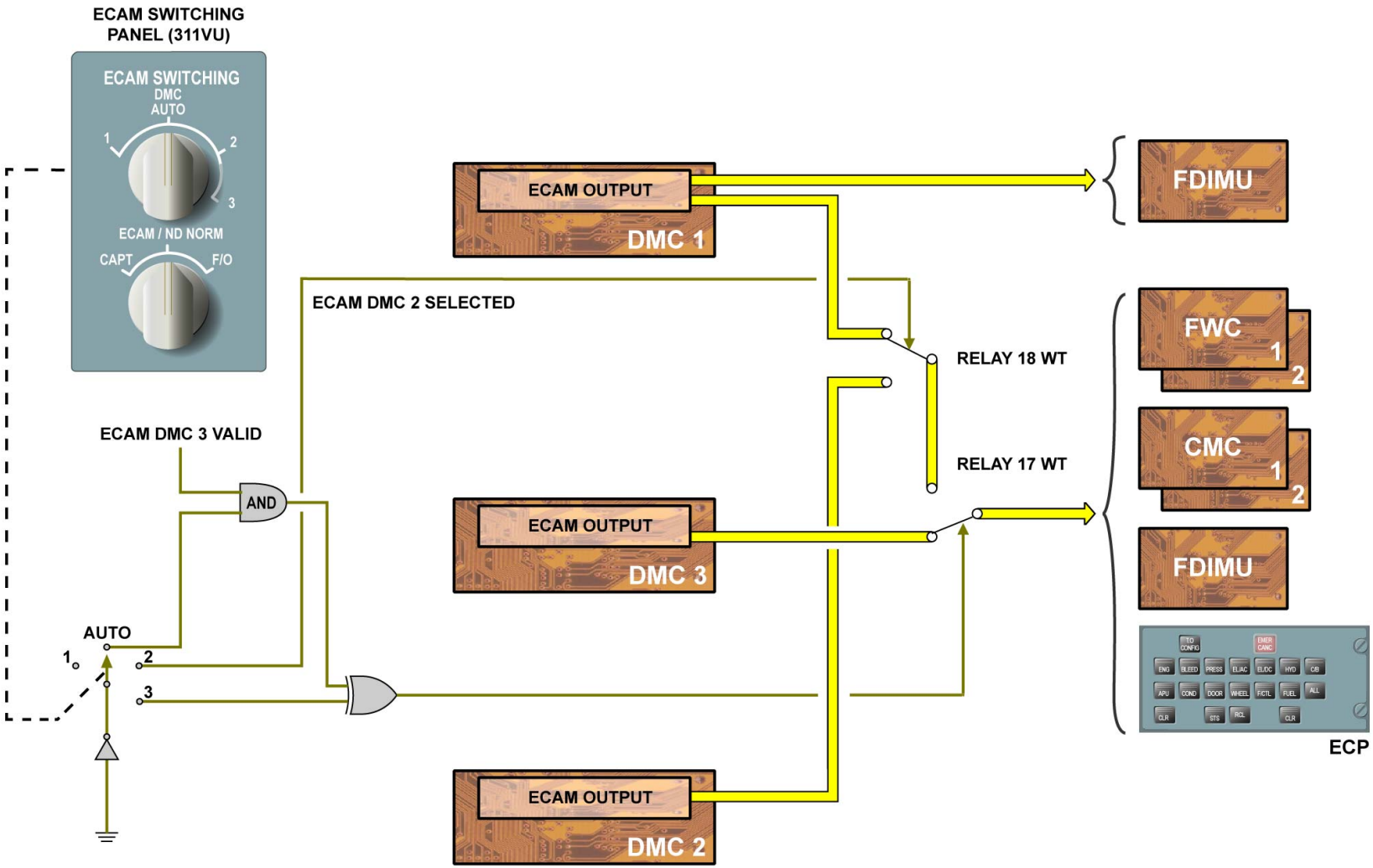

EIS SWITCHING - ECAM OUTPUT BUS

G7508471 - G3NT1T0 - FM31D200000002

EIS D/O (3)

EIS SWITCHING (continued)

WEATHER RADAR/EGPWS SWITCHING

Each DMC can receive 5 ARINC 453 inputs:
- data bus 1 and 2 from Weather Radar (WXR) transceiver 1 or EGPWS,
- data bus 1 and 2 from WXR transceiver 2,
- data bus from the DMC 3 ARINC 453 output.

The switching between bus 1 and bus 2 is directly linked to Flight Management (FM). The DMC uses BUS 1 when it uses the FM 1 bus or BUS 2 when the FM 2 bus is used. The switching is performed by a set of two relays inside each DMC. In normal operation, EFIS DMC 1 and EFIS DMC 2 directly supply the CAPT and F/O DUs. The bus 1 signals from both transceivers are electrically added in the DMC. The same thing applies for the bus 2 signals, the DMC then supplies one ARINC 453 output bus to the associated DUs. When EFIS DMC 3 is selected with the CAPT or F/O EFIS DMC switching, the discrete signal WXR on EFIS 3 is activated and the WXR information is sent through DMC1 or DMC 2. The discrete signal WXR ON EFIS 3 is a ground. Note that the CAPT cannot display the WXR data on his DUs by setting the EFIS DMC rotary selector to 2. The same thing applies for the F/O with the EFIS DMC rotary selector set to 1.

G7508471 - G3NT1T0 - FM31D200000002

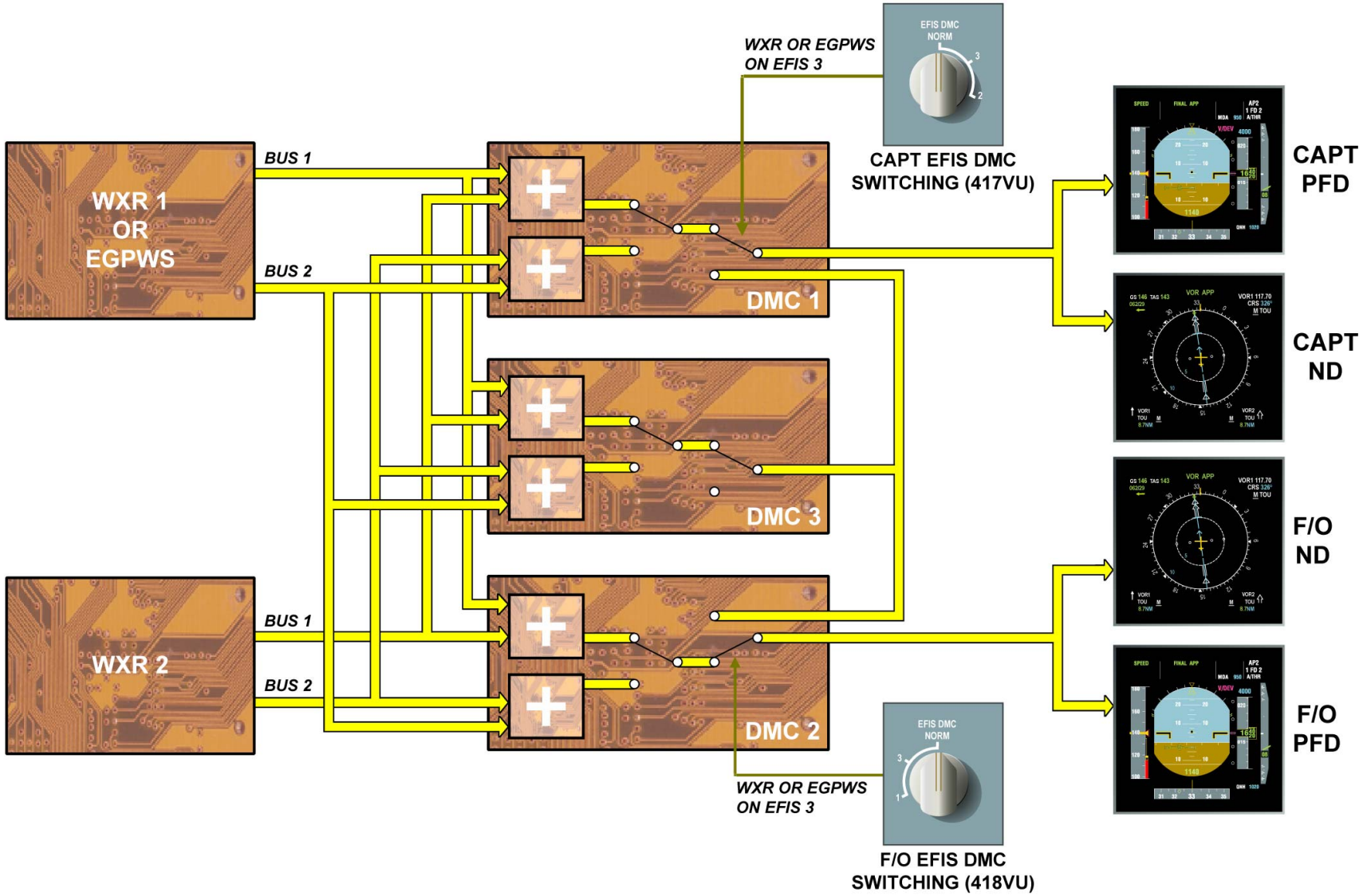

EIS SWITCHING - WEATHER RADAR/EGPWS SWITCHING

EIS ABNORMAL OPERATION (3)

PFD OR ND FAILURE

When the Primary Flight Display (PFD) fails or is switched off, the PFD image is transferred automatically on the Navigation display (ND). In this case, it is possible to recover the ND image by pushing the PFD/ND transfer P/B. When the ND fails or is switched off, the ND image can be manually recovered on the PFD by using the PFD/ND transfer P/B.

G7508471 - G3NT1T0 - FM31DA000000002

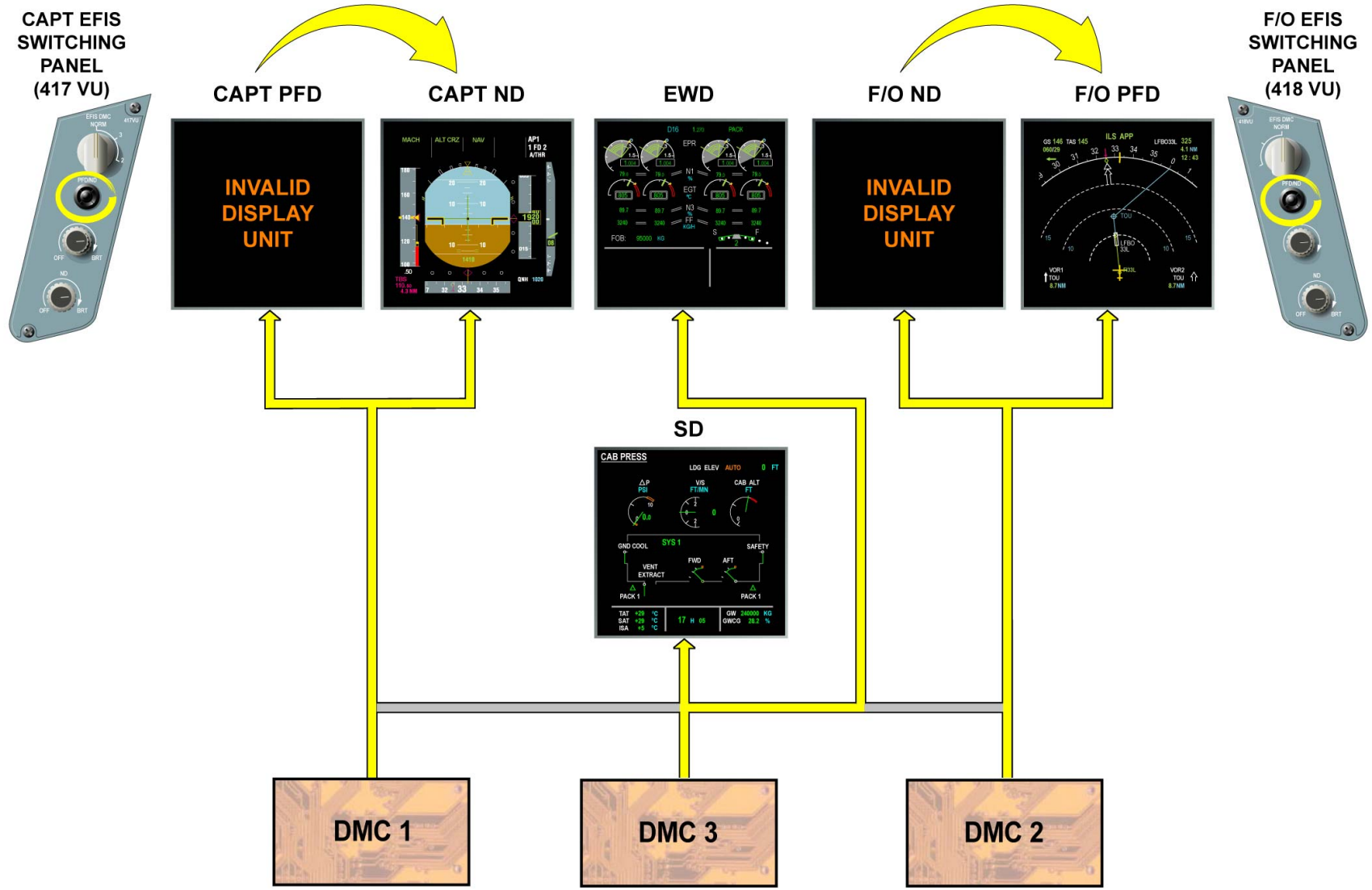

PFD OR ND FAILURE

EIS ABNORMAL OPERATION (3)

EWD/SD FAILURES

EWD OR SD FAILURE

When the Engine/Warning Display (EWD) fails or is switched off, the EWD image is automatically transferred to the System Display (SD). In this case only one Display Unit (DU) is available to show the ECAM displays, this is called the ECAM SINGLE DISPLAY mode. In this mode, the EWD has priority but a system page can be displayed momentarily by pressing and holding one of the system keys on the ECAM Control Panel (ECP). If the failure happens on the lower display, the EWD is presented on the upper display and this is also in ECAM SINGLE DISPLAY mode. In these failure cases, the pilots may use the ECAM/ND transfer selection to recover a second ECAM display on the ND.

EWD AND SD FAILURE

If both ECAM DUs fail or are switched off, the crew can display the EWD image on the ND by switching the ECAM/ND transfer selector to CAPT or F/O. This is then an ECAM SINGLE DISPLAY mode, but in this case ECAM is presented on the ND.

G7508471 - G3NT1T0 - FM31DA000000002

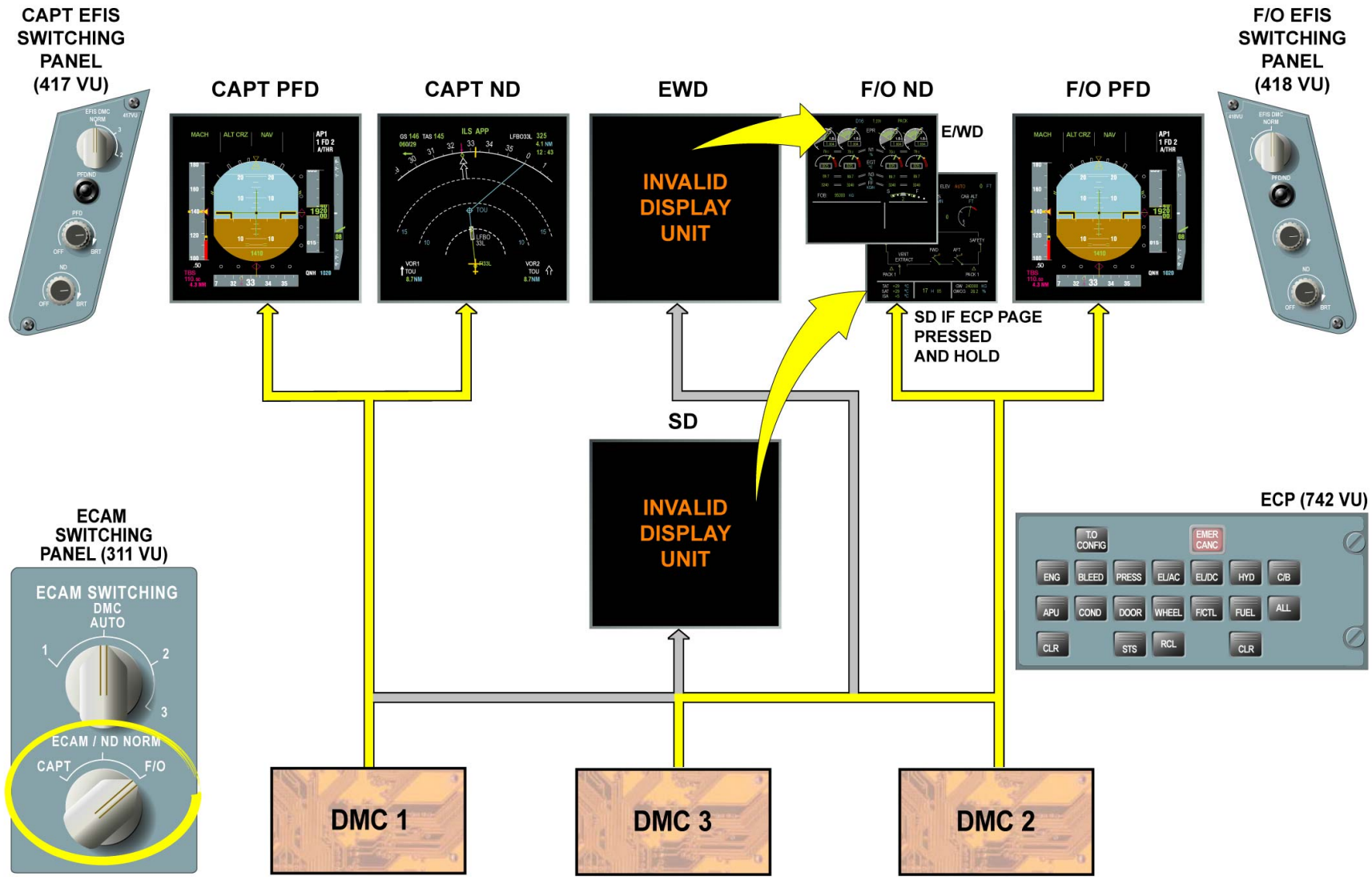

EWD/SD FAILURES - EWD OR SD FAILURE & EWD AND SD FAILURE

G7508471 - G3NT1T0 - FM31DA000000002

EIS ABNORMAL OPERATION (3)

DMC FAILURE

DMC 1 (2) FAILURE

In normal configuration, captain (F/O) PFD and ND are affected by the failure of the Display Management Computer 1(2) (DMC). In this case a caution message appears on the EWD and the amber message 'INVALID DATA' is displayed in the center of the PFD and ND. So the captain (F/O) must switch to DMC3 to recover the PFD and ND information.

G7508471 - G3NT1T0 - FM31DA000000002

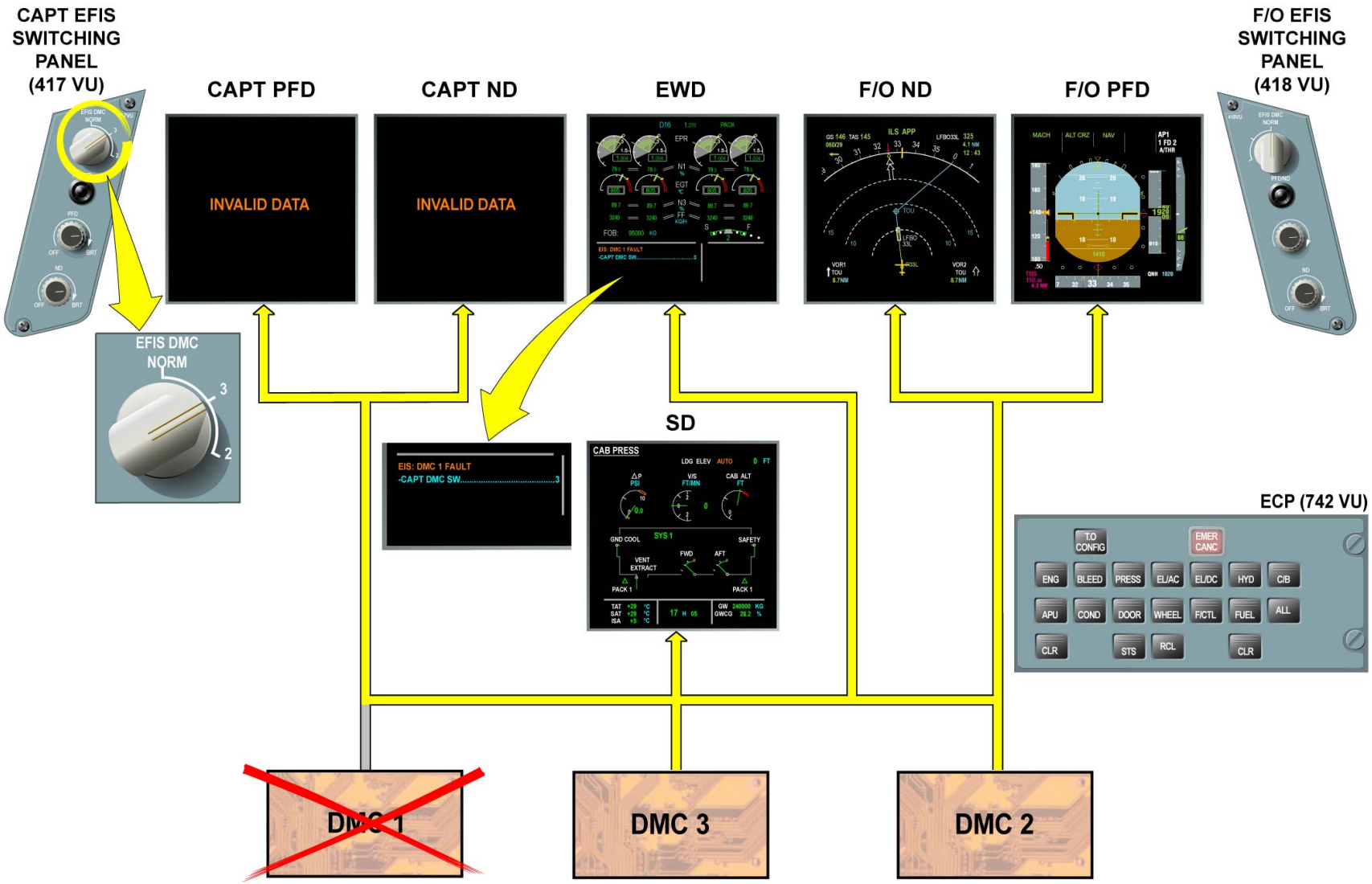

DMC FAILURE - DMC 1 (2) FAILURE

G7508471 - G3NT1T0 - FM31DA000000002

EIS ABNORMAL OPERATION (3)

DMC FAILURE (continued)

DMC 3 FAILURE

When the DMC3 fails, the DMC1 takes over automatically but not immediately (a message is displayed on both EWD and SD for 1 second: "INVALID DATA"). The crew is then asked to switch the ECAM SWITCHING/DMC selector switch to the position 1 to confirm this DMC 1 selection.

G7508471 - G3NT1T0 - FM31DA000000002

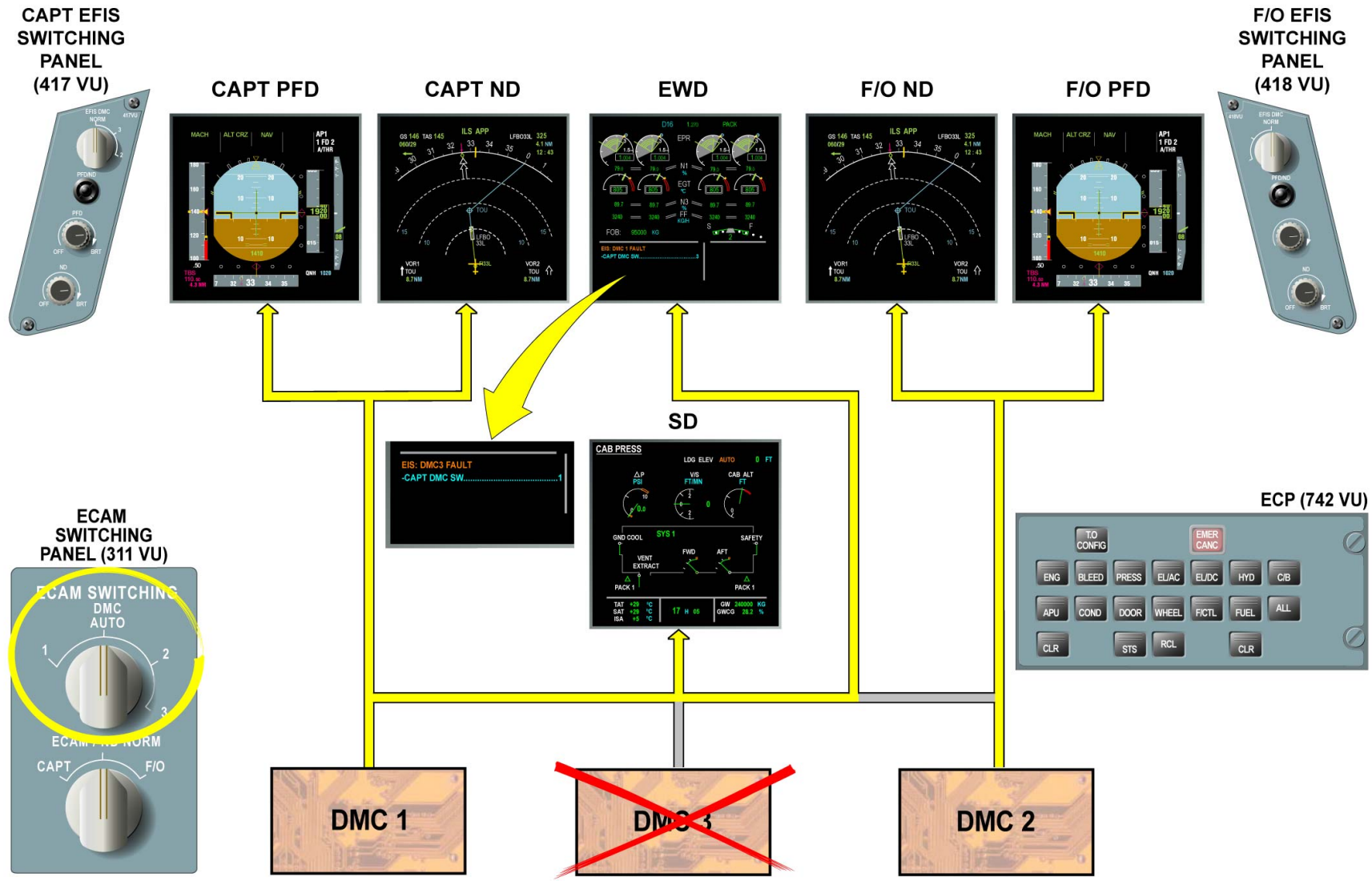

DMC FAILURE - DMC 3 FAILURE

G7508471 - G3NT1T0 - FM31DA000000002

EIS ABNORMAL OPERATION (3)

DMC FAILURE (continued)

DMC 1+3 FAILURE

When DMC 1 and 3 fail, the system is under a degraded redundancy. On the CAPT PFD, ND, EWD and SD, the amber message 'INVALID DATA' is displayed in the center of the displays. The CAPT must switch the EFIS DMC SELECTOR and the ECAM DMC SWITCHING to the position 2. In this case a caution message appears on the EWD. The consequence is that DMC 2 drives the 6 DUs. The message 'EFIS SINGLE SOURCE 2' is displayed on both PFDs (COPY mode).

G7508471 - G3NT1T0 - FM31DA000000002

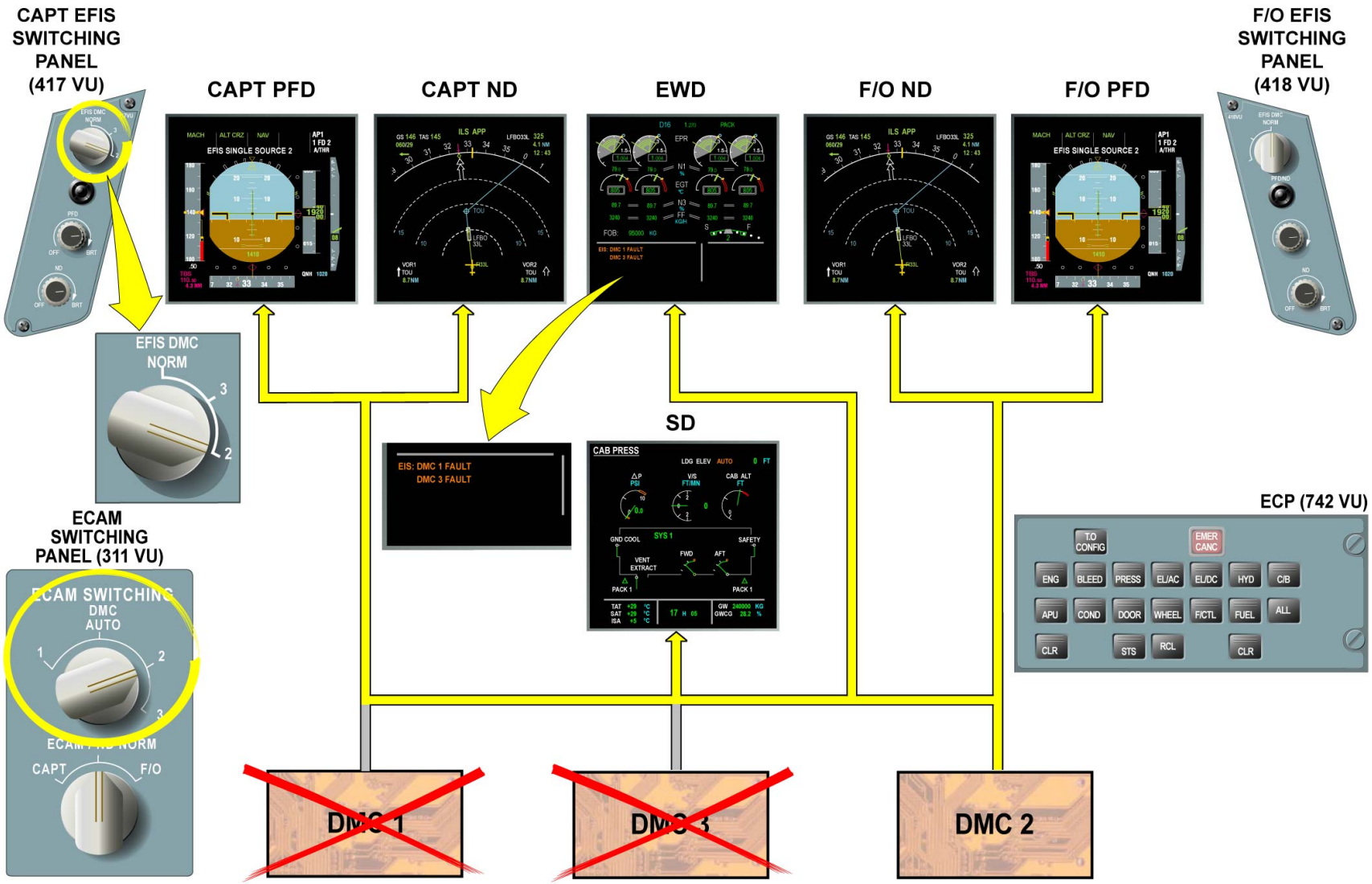

DMC FAILURE - DMC 1+3 FAILURE

EIS ABNORMAL OPERATION (3)

DMC FAILURE (continued)

DMC 1+2+3 FAILURE

In case of a triple DMC failure no more EFIS and ECAM information is presented, the amber message INVALID DATA is displayed on the 6 DUs. The crew has to use the Integrated Standby Instrument System (ISIS).

G7508471 - G3NT1T0 - FM31DA000000002

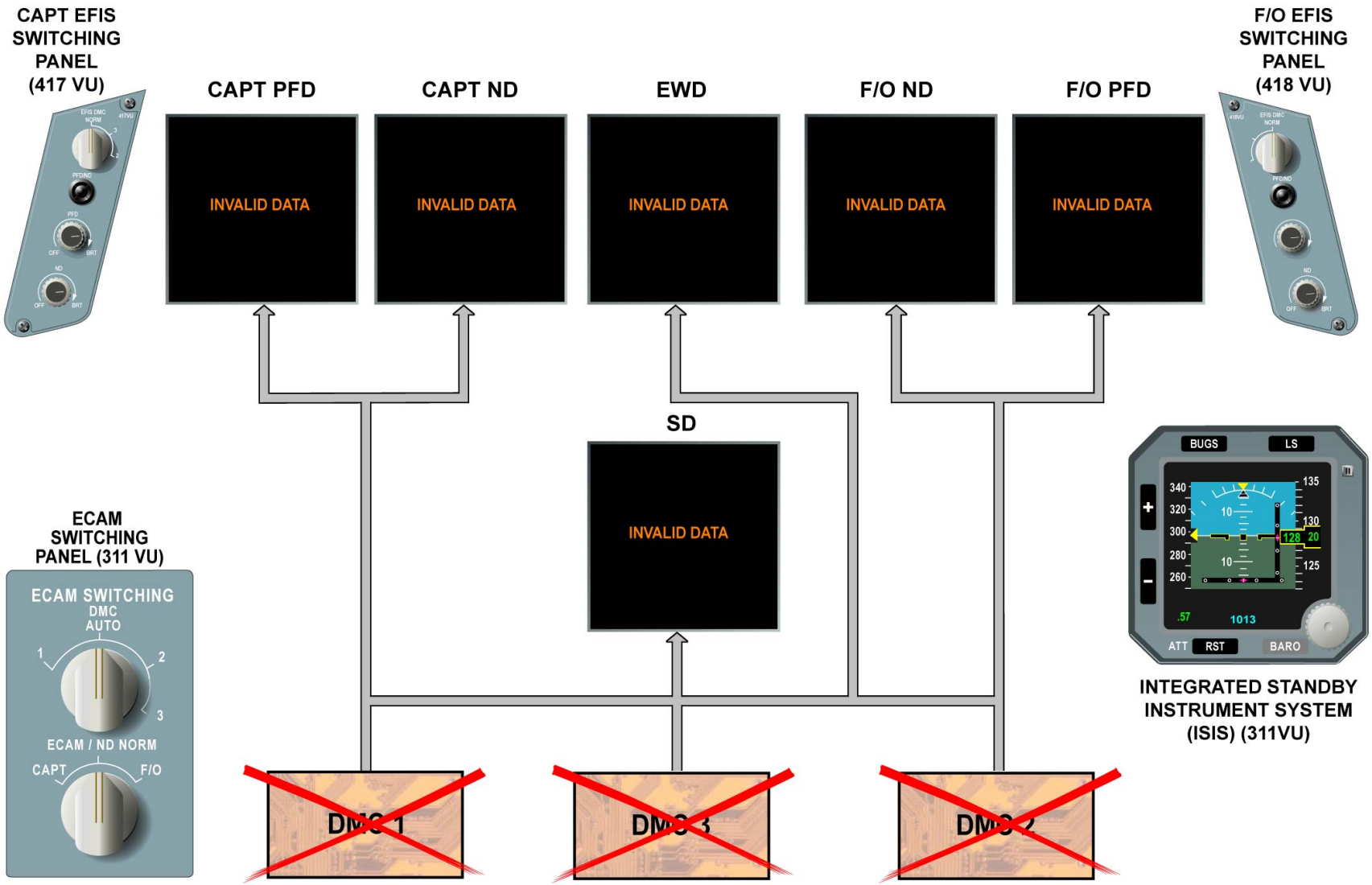

DMC FAILURE - DMC 1+2+3 FAILURE

EIS ABNORMAL OPERATION (3)

EFIS SWITCHING NOT ALLOWED

Some EFIS switching are not allowed because they can cause unusual configurations of the system. In case the crew wants to switch some of these configurations, an amber message comes into view on the PFD.

G7508471 - G3NT1T0 - FM31DA000000002

PRIMARY FLIGHT DISPLAY (PFD) UPPER PART

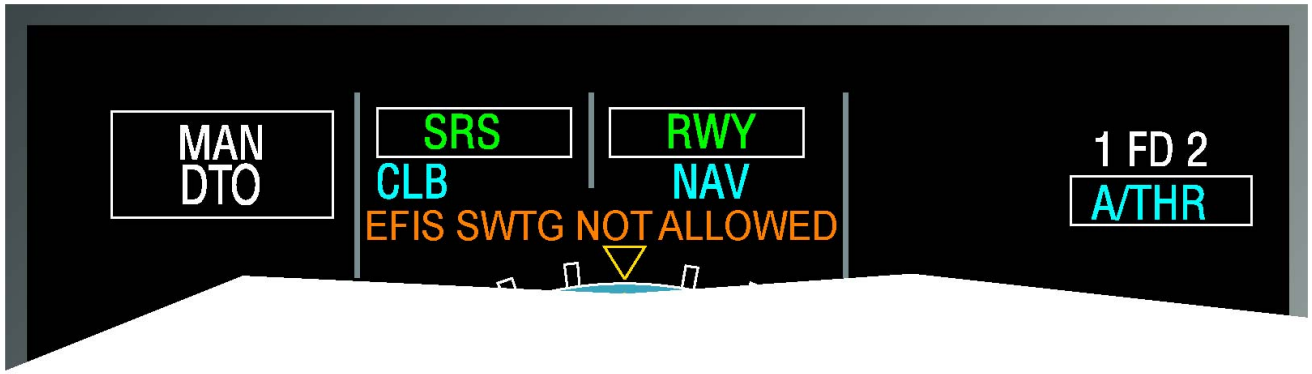

CAPT EFIS DMC	F/O EFIS DMC
DMC 2	DMC 1
DMC 2	DMC 3
DMC 3	DMC 1

EFIS SWITCHING NOT ALLOWED

G7508471 - G3NT1T0 - FM31DA000000002

EIS ABNORMAL OPERATION (3)

FWC FAILURE

When one Flight Warning Computer (FWC) 1(2) fails, the other one takes over automatically. Half of the bulbs in each MASTER WARNing and MASTER CAUTion annunciators are lost. When this failure occurs a caution message appears on the EWD indicating which FWC has failed.
After the loss of both FWCs, the ECAM warnings are not available as well as:
- altitude alert,
- status,
- auto call out,
- memo.

In this case, a caution message appears on the EWD:
FWS: FWC 1+2 FAULT
MONITOR SYS,
MONITOR OVERHEAD PANEL.
The SD is still available and must be used for system checks.

SDAC FAILURE

When one SDAC 1(2) fails, the other one takes over automatically. When this failure occurs a caution message appears on the EWD, indicating which SDAC has failed.
After the loss of both SDACs, most of the amber caution messages are lost but all red messages are still available on the EWD. On the SD, some system pages are still available. When this failure occurs a caution message appears on the EWD:
FWS: SDAC 1+2 FAULT
MONITOR OVERHEAD PANEL,
ECAM SYS PAGES AVAIL:
ENG, F/CTL, FUEL, WHEEL, PRESS, C/B.

ECP FAILURE

In case of the ECAM Control Panel (ECP) failure, the following keys are still available:
- ALL,
- CLeaR,
- ReCalL,
- StaTuS,
- EMERgency CANCel,

In this case a caution message appears on the EWD:
FWS: ECP FAULT
ECP KEYS AVAIL:
CLR, RCL, STS, ALL,
EMER CANC.

G7508471 - G3NT1T0 - FM31DA000000002

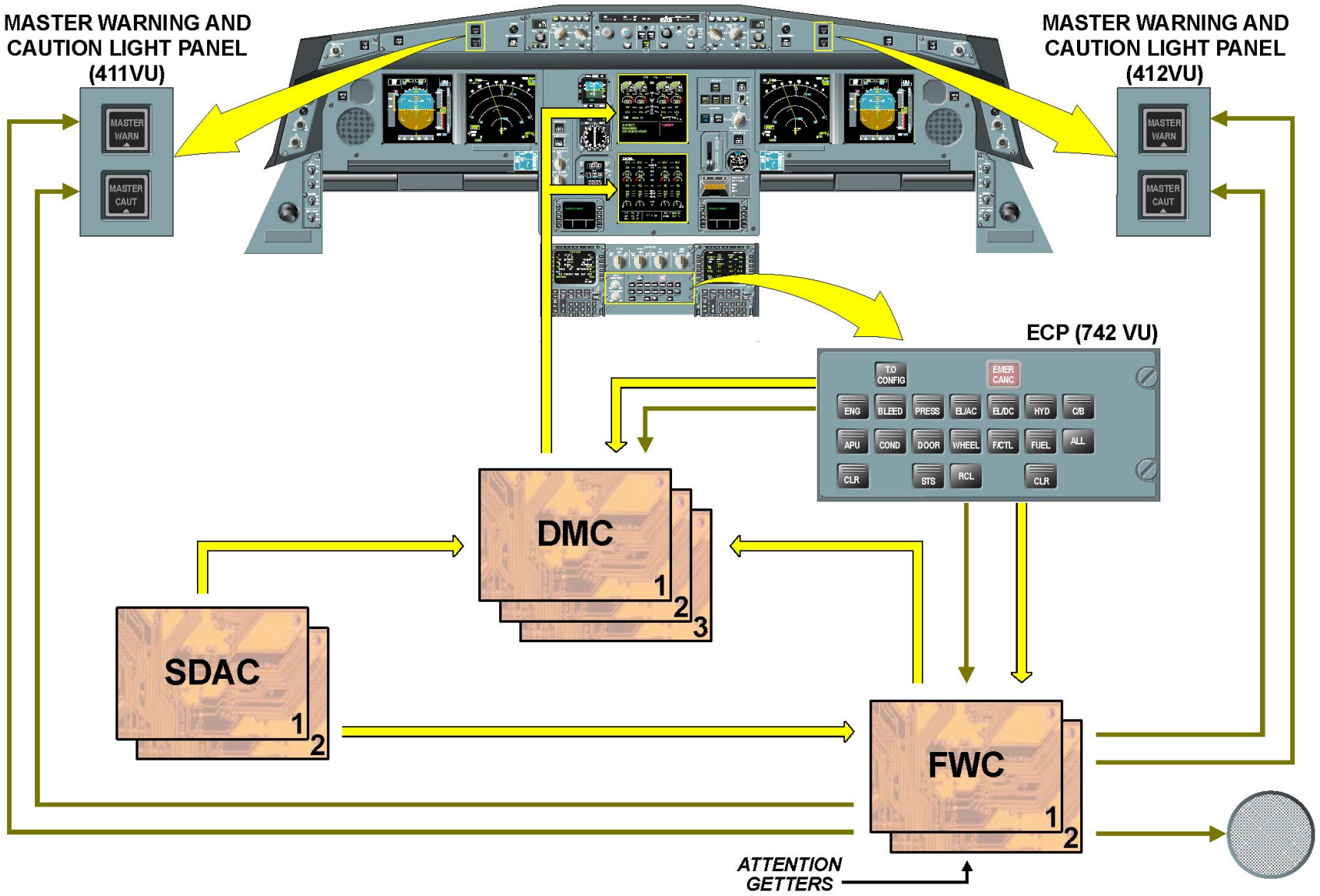

FWC FAILURE ... ECP FAILURE

G7508471 - G3NT1T0 - FM31DA000000002

EIS ABNORMAL OPERATION (3)

FEEDBACK MONITORING

Two other display units monitor each displayed image on a DU and also receive the parameters. As soon as a discrepancy occurs between some main parameters sent by a sensor and what is displayed by the relevant DU, a caution message appears on the monitoring DU. Each DU, according to its position, monitors two different images (wherever they are displayed) as follows:
- DU 1 monitors EWD and F/O ND images,
- DU 2 monitors SD and F/O PFD images,
- DU 3 monitors CAPT PFD and ND images,
- DU 4 monitors F/O PFD and ND images,
- DU 5 monitors CAPT PFD and SD images,
- DU 6 monitors CAPT ND and EWD images.

The following parameters are monitored:
- pitch, roll, heading and altitude indications on PFD,
- heading indication on ND,
- N1, N2, N3, EGT, Fuel Flow and EPR indications for all the engines on EWD,
- UTC indication (minutes only) on SD.

When a DU triggers an order to display a feedback CHECK message, a specific message is announced by the monitoring DU as follows:
- PFD CAPT discrepancy: CHECK CAPT PFD
- ND CAPT discrepancy: CHECK ND CAPT
- EWD discrepancy: CHECK EWD
- SD discrepancy: CHECK SD
- ND F/O discrepancy: CHECK ND FO
- PFD F/O discrepancy: CHECK PFD FO

NOTE: Additionally to the monitoring DU, for the CHECK PFD (CAPT or F/O), the CHECK PFD CAPT or FO message is also displayed on the monitored PFD.

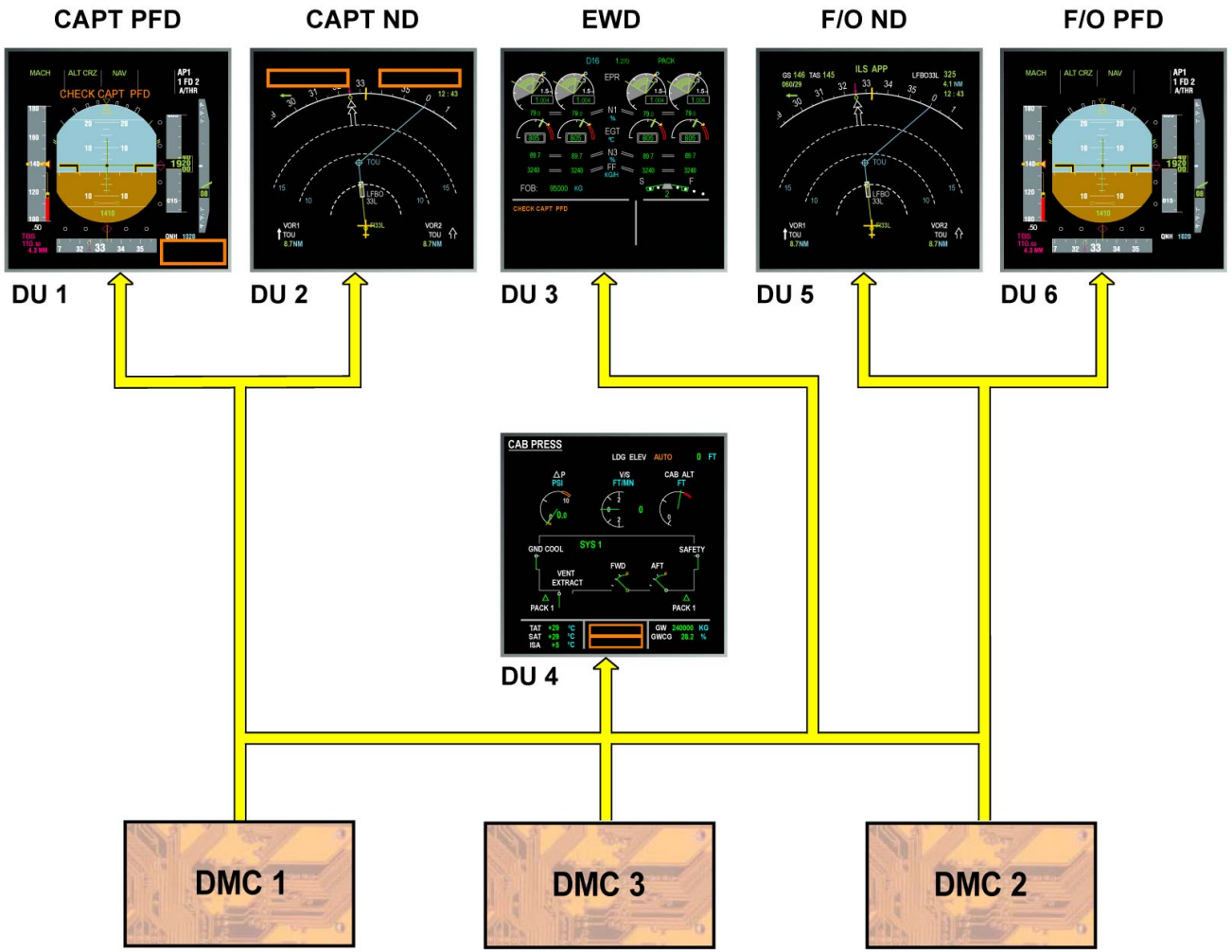

FEEDBACK MONITORING

G7508471 - G3NT1T0 - FM31DA000000002

EIS ABNORMAL OPERATION (3)

DU MESSAGES

The following table summarizes all the other messages displayed by the DUs on a black screen.

G7508471 - G3NT1T0 - FM31DA000000002

DU MESSAGE	DETAILS	MEANING
BLANK SCREEN	/	- DISPLAY UNIT IN OFF POSITION - DISPLAY UNIT FAILURE CASES WHERE THE INTEGRITY OF THE DISPLAY CAN NO LONGER BE WARRANTED - DISPLAY UNIT NOT POWERED
DISPLAY SYSTEM VERSION INCONSISTENCY	AMBER MESSAGE CENTERED ON THE SCREEN	- IF AN OPERATIONAL IMAGE AND THE MESSAGE ARE DISPLAYED, THE DISPLAY UNIT AND AN INACTIVE DMC HAVE DIFFERENT EIS SOFTWARE VERSION - IF ONLY THE MESSAGE IS DISPLAYED, THE DISPLAY UNIT AND ITS ACTIVE DMC HAVE DIFFERENT EIS SOFTWARE VERSION
DMC VERSION INCONSISTENCY	AMBER MESSAGE CENTERED ON THE SCREEN	EIS LOADED SOFTWARE INSIDE THE ACTIVE DMC IS NOT COMPATIBLE WITH A/C TYPE (DMC PIN PROG)
E	LARGE WHITE LETTER CENTERED ON THE SCREEN	NONE OPERATIONAL SOFTWARE STORED IN THE DISPLAY UNIT
ECAM ON ND	GREEN MESSAGE CENTERED ON THE SCREEN	ECAM IMAGE IS DISPLAYED ON ND AND BOTH ECAM DISPLAY UNITS ARE VALID
F	LARGE AMBER LETTER CENTERED ON THE SCREEN	DISPLAY UNIT IS UNSERVICEABLE

DU MESSAGES

G7508471 - G3NT1T0 - FM31DA000000002

DU MESSAGE	DETAILS	MEANING
DU NOT MONITORED	AMBER MESSAGE CENTERED ON THE SCREEN	- IF A DISPLAY UNIT IS NO MORE MONITORED BY ANOTHER DISPLAY UNIT
INVALID DATA	AMBER MESSAGE CENTERED ON THE SCREEN	DISPLAY UNIT DOES NOT RECEIVE ANY DATA FROM A DMC
INVALID DISPLAY UNIT	AMBER MESSAGE CENTERED ON THE SCREEN	- POWER ON SELF TEST (POST) RESULT NOT OK - DISPLAY UNIT COMPATIBILITY CHECK NOT OK
L	LARGE CYAN LETTER CENTERED ON THE SCREEN	DISPLAY UNIT IS TELELOADED
MAINTENANCE MODE	GREEN MESSAGE CENTERED ON THE SCREEN	EIS IS IN MAINTENANCE MODE
PLEASE WAIT	GREEN MESSAGE CENTERED ON THE SCREEN	DISPLAYED FOR 1 SECOND DURING OPERATIONAL IMAGE/VIDEO TRANSITION

DU MESSAGES

G7508471 - G3NT1T0 - FM31DA000000002

DU MESSAGE	DETAILS	MEANING
SELF TEST IN PROGRESS (MAX XX SECONDS)	GREEN MESSAGE CENTERED ON THE SCREEN	DISPLAY UNIT IS IN POWER ON SELF TEST (POST)
VIDEO NOT AVAIL	AMBER MESSAGE CENTERED ON THE SCREEN	VIDEO NOT AVAILABLE
WAITING FOR DATA (MAX XX SECONDS)	GREEN MESSAGE CENTERED ON THE SCREEN	DMC ARINC 629 COMMUNICATION IS TO BE ESTABLISHED

G7508471 - G3NT1T0 - FM31DA000000002

DU MESSAGES

INDICATING SYSTEMS LINE MAINTENANCE (2)

UP LOADING PROCEDURE OF THE DMC1 WITH THE MDDU

NOTE: This procedure is used to update the Display Management Computer (DMC) 1 software (P/N) only. DMC2, and then DMC3, can be cross-loaded from DMC1.
Make sure that the Aircraft is in ground configuration by checking the GND indication displayed in the SD BLEED page.
From the RESET Control panel, open the RESET DMC1 circuit breaker. INVALID DATA will be displayed on the CAPT PFD and ND.
From the Data Loading Selector (DLS) panel select DMC1.
Put into the Multipurpose Disk Drive Unit (MDDU) the first disk related to the EIS. READY then WAIT RESPONSE is displayed on MDDU screen.
Close the RESET DMC1 circuit breaker. Up loading begins, and the MDDU display shows TRANSF. IN PROG. As soon as the transfer is done EJECT DISK indication is displayed.
Insert the following disk, repeat and monitor the MDDU process until TRANSF COMPLETE indication is displayed.
Remove the last disk from disk drive. <<MDDU READY>> indication appears.
Set the DLS to OFF, after a short delay DISPLAY SYSTEM VERSION INCONSISTENCY comes into view on the CAPT PFD and ND which means that the DMC 1 uploaded software is different from the others DMCs and Liquid Crystal Display Units (LCDUs).
NOTE: DMC 2 and 3 must be cross loaded from DMC 1 by using the CMS System Report Test page of the MCDU. This page also enables to perform the cross loading of the 6 LCDUs in order to get the same software in the complete EIS 2 system. The AMM cross loading procedures must be used accordingly.

UP LOADING Procedure of the DMC1 with the MDDU

...

Job set-up

...

Make sure that the aircraft is in the GROUND configuration by checking the BLEED SD page, GND is displayed in white.

...

Procedure

...

UP LOADING the DMC1 operational software

On the RESET control panel 261VU (262VU):
- open the RESET DMC/1 Circuit Breaker.

On the DATA LOADER control panel 265VU:
- set the Data Loading Selector switch to DMC1.

On the MDDU:
- put the first disk into the disk drive with the label in the forward direction.
- the READY indication is shown, then WAIT RESPONSE.

On the RESET control panel 261VU (262VU):
- close the RESET DMC/1 Circuit Breaker.

On the MDDU:
- remove the disk from the disk drive.
- repeat the steps until there remains a last disk.
- put the last disk into the disk drive.
- remove the last disk from the disk drive.

On the DATA LOADER control panel 265VU:
- set the Data Loading Selector switch to OFF.

...

Close-up

...

Procedure used only for DMC1 software (P/N) upgrade.

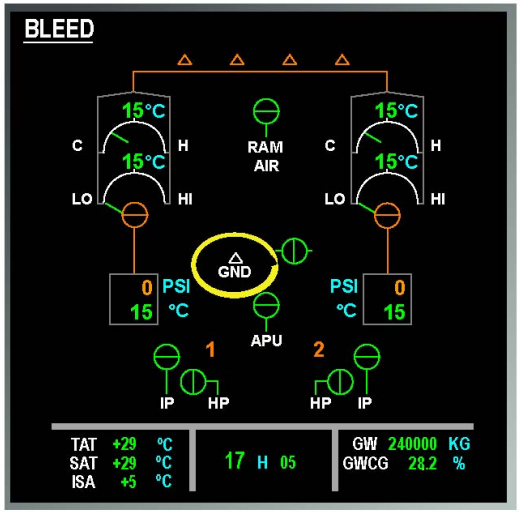

A330 ECAM BLEED PAGE

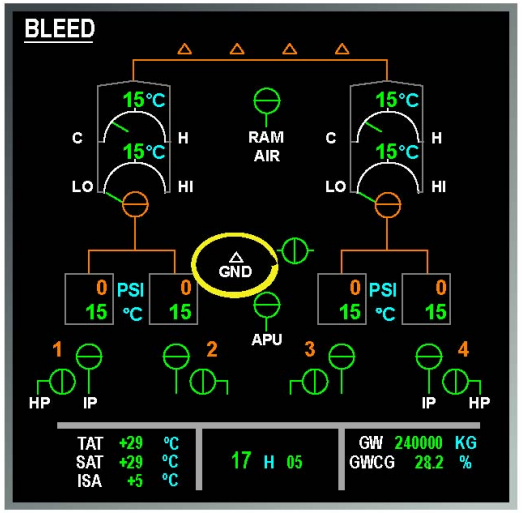

A340 ECAM BLEED PAGE

UP LOADING PROCEDURE OF THE DMC1 WITH THE MDDU

G7508471 - G3NT1T0 - FM31Y1LINEMCE02

UP LOADING Procedure of the DMC1 with the MDDU

...
Job set-up
...

Make sure that the aircraft is in the GROUND configuration by checking the BLEED SD page, GND is displayed in white.

...
Procedure
...

UP LOADING the DMC1 operational software

On the RESET control panel 261VU (262VU):
- open the RESET DMC/1 Circuit Breaker.

On the DATA LOADER control panel 265VU:
- set the Data Loading Selector switch to DMC1.

On the MDDU:
- put the first disk into the disk drive with the label in the forward direction.
- the READY indication is shown, then WAIT RESPONSE.

On the RESET control panel 261VU (262VU):
- close the RESET DMC/1 Circuit Breaker.

On the MDDU:
- remove the disk from the disk drive.
- repeat the steps until there remains a last disk.
- put the last disk into the disk drive.
- remove the last disk from the disk drive.

On the DATA LOADER control panel 265VU:
- set the Data Loading Selector switch to OFF.

...
Close-up
...

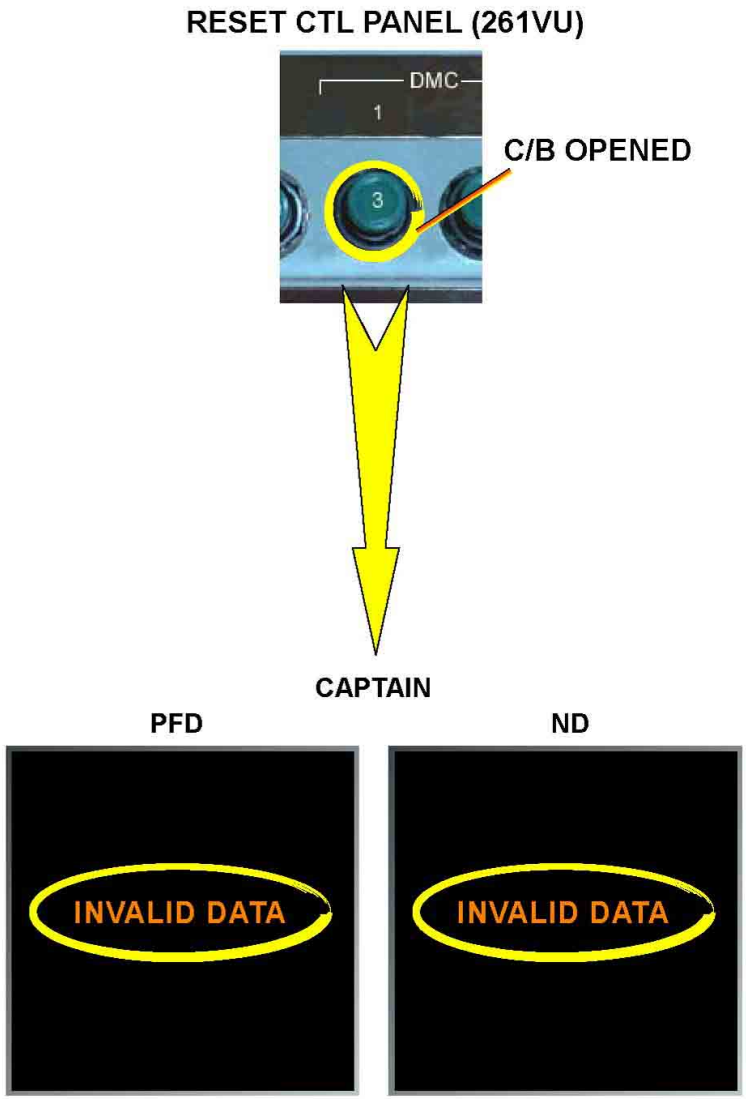

UP LOADING PROCEDURE OF THE DMC1 WITH THE MDDU

UP LOADING Procedure of the DMC1 with the MDDU

...
Job set-up
...

Make sure that the aircraft is in the GROUND configuration by checking the BLEED SD page, GND is displayed in white.

...
Procedure
...

UP LOADING the DMC1 operational software

On the RESET control panel 261VU (262VU):
- open the RESET DMC/1 Circuit Breaker.

On the DATA LOADER control panel 265VU:
- set the Data Loading Selector switch to DMC1.

On the MDDU:
- put the first disk into the disk drive with the label in the forward direction.
- the READY indication is shown, then WAIT RESPONSE.

On the RESET control panel 261VU (262VU):
- close the RESET DMC/1 Circuit Breaker.

On the MDDU:
- remove the disk from the disk drive.
- repeat the steps until there remains a last disk.
- put the last disk into the disk drive.
- remove the last disk from the disk drive.

On the DATA LOADER control panel 265VU:
- set the Data Loading Selector switch to OFF.

...
Close-up
...

RESET CTL PANEL (261VU)

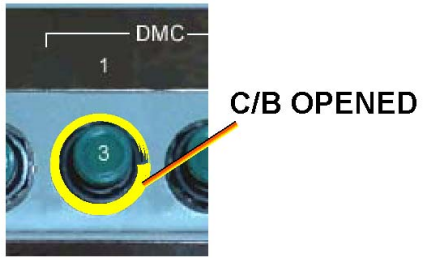

(265VU)

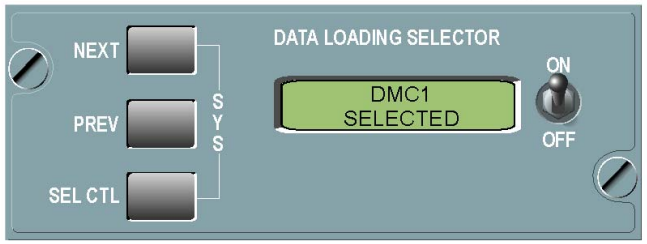

Multipurpose Disk Drive Unit (MDDU)

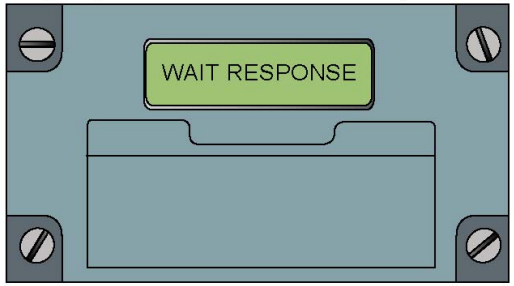

UP LOADING PROCEDURE OF THE DMC1 WITH THE MDDU

UP LOADING Procedure of the DMC1 with the MDDU

...
Job set-up
...

Make sure that the aircraft is in the GROUND configuration by checking the BLEED SD page, GND is displayed in white.

...
Procedure
...

UP LOADING the DMC1 operational software

On the RESET control panel 261VU (262VU):
- open the RESET DMC/1 Circuit Breaker.

On the DATA LOADER control panel 265VU:
- set the Data Loading Selector switch to DMC1.

On the MDDU:
- put the first disk into the disk drive with the label in the forward direction.
- the READY indication is shown, then WAIT RESPONSE.

On the RESET control panel 261VU (262VU):
- close the RESET DMC/1 Circuit Breaker.

On the MDDU:
- remove the disk from the disk drive.
- repeat the steps until there remains a last disk.
- put the last disk into the disk drive.
- remove the last disk from the disk drive.

On the DATA LOADER control panel 265VU:
- set the Data Loading Selector switch to OFF.

...
Close-up
...

RESET CTL PANEL (261VU)

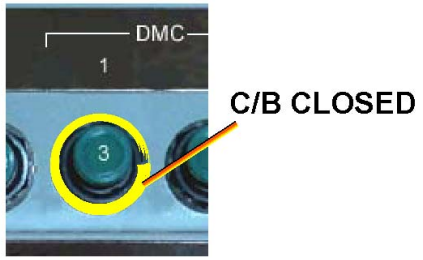

(265VU)

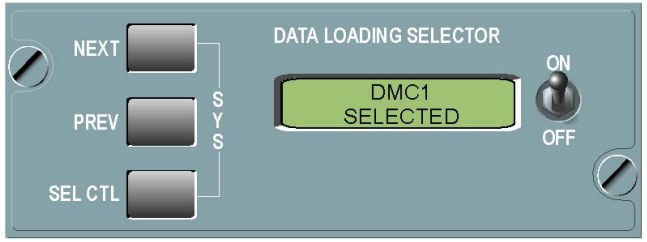

Multipurpose Disk Drive Unit (MDDU)

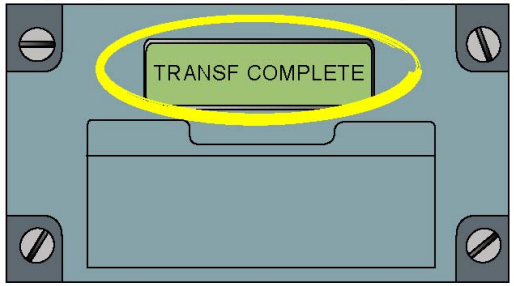

UP LOADING PROCEDURE OF THE DMC1 WITH THE MDDU

UP LOADING Procedure of the DMC1 with the MDDU

...
Job set-up
...

Make sure that the aircraft is in the GROUND configuration by checking the BLEED SD page, GND is displayed in white.

...
Procedure
...

UP LOADING the DMC1 operational software

On the RESET control panel 261VU (262VU):
- open the RESET DMC/1 Circuit Breaker.

On the DATA LOADER control panel 265VU:
- set the Data Loading Selector switch to DMC1.

On the MDDU:
- put the first disk into the disk drive with the label in the forward direction.
- the READY indication is shown, then WAIT RESPONSE.

On the RESET control panel 261VU (262VU):
- close the RESET DMC/1 Circuit Breaker.

On the MDDU:
- remove the disk from the disk drive.
- repeat the steps until there remains a last disk.
- put the last disk into the disk drive.
- remove the last disk from the disk drive.

On the DATA LOADER control panel 265VU:
- set the Data Loading Selector switch to OFF.

...
Close-up
...

RESET CTL PANEL (261VU)

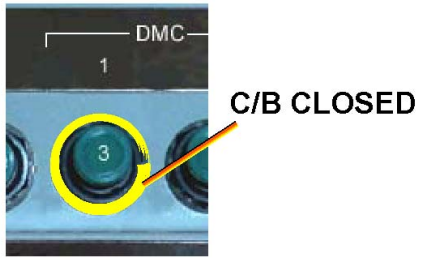

(265VU)

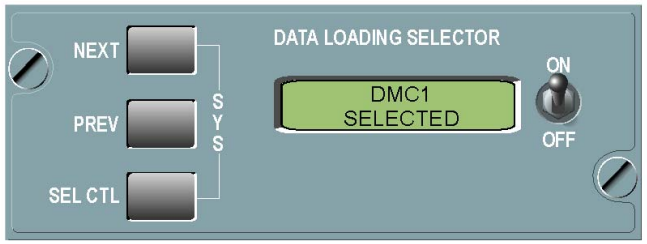

Multipurpose Disk Drive Unit (MDDU)

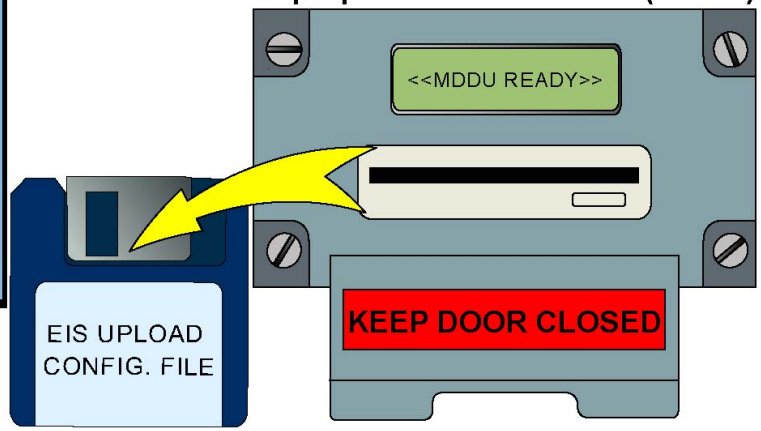

UP LOADING PROCEDURE OF THE DMC1 WITH THE MDDU

G7508471 - G3NT1T0 - FM31Y1LINEMCE02

UP LOADING Procedure of the DMC1 with the MDDU

...
✓ Job set-up
...

✓ Make sure that the aircraft is in the GROUND configuration by checking the BLEED SD page, GND is displayed in white.

...
✓ Procedure
...

UP LOADING the DMC1 operational software

✓ **On the RESET control panel 261VU (262VU):**
- open the RESET DMC/1 Circuit Breaker.

✓ **On the DATA LOADER control panel 265VU:**
- set the Data Loading Selector switch to DMC1.

✓ **On the MDDU:**
- put the first disk into the disk drive with the label in the forward direction.
- the READY indication is shown, then WAIT RESPONSE.

✓ **On the RESET control panel 261VU (262VU):**
- close the RESET DMC/1 Circuit Breaker.

✓ **On the MDDU:**
- remove the disk from the disk drive.
- repeat the steps until there remains a last disk.
- put the last disk into the disk drive.
- remove the last disk from the disk drive.

✓ **On the DATA LOADER control panel 265VU:**
- set the Data Loading Selector switch to OFF.

...
✓ Close-up
...

✓ TASK COMPLETED

MCDU/CMS SYSTEM REPORT-TEST page allows to crossload soft of:
- -DMC1 -> DMC2 then DMC3
- -The 6 LCDUs

For this, refer to the AMM crossloading procedures.

(265VU)

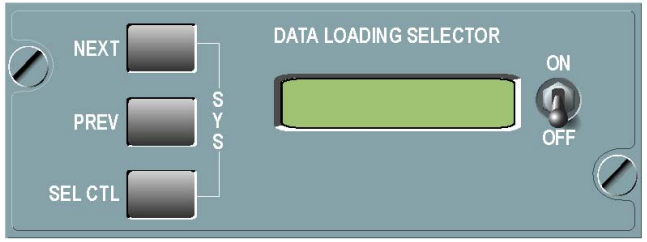

CAPTAIN

PFD

ND

UP LOADING PROCEDURE OF THE DMC1 WITH THE MDDU

This Page Intentionally Left Blank

G7508471 - G3NT1T0 - FM31Y1LINEMCE02

AIRBUS S.A.S.
31707 BLAGNAC cedex, FRANCE
STM
REFERENCE G7508471
NOVEMBER 2008
PRINTED IN FRANCE
AIRBUS S.A.S. 2008
ALL RIGHTS RESERVED

AN EADS COMPANY

A330-200/300
TECHNICAL TRAINING MANUAL
MAINTENANCE COURSE - T1 (LVL 2&3) (RR Trent 700)
R RECORDING

This document must be used for training purposes only

Under no circumstances should this document be used as a reference

It will not be updated.

All rights reserved
No part of this manual may be reproduced in any form,
by photostat, microfilm, retrieval system, or any other means,
without the prior written permission of AIRBUS S.A.S.

AIRBUS Environmental Recommendation
Please consider your environmental responsability before printing this document.

R RECORDING

Recording Systems Line Maintenance Briefing (2) 2

DFDRS

DFDRS General Description (3) 12
DFDRS D/O (3) 30
DFDRS Sources D/O (3) 38

ACMS

ACMS General Description (3) 42
ACMS D/O (3) 68
ACMS Reports D/O (3) 96
ACMS Sources D/O (3) 132

MAINTENANCE PRACTICE

Recording Systems Base Maintenance (3) 138

RECORDING SYSTEMS LINE MAINTENANCE BRIEFING (2)

RECORDING SYSTEM - OVERVIEW

Two independent recording functions are accomplished with the FDIMU. It combines the Flight Data Interface Unit (FDIU), which collects parameters for the DFDRS, and the Data Management Unit (DMU), which collects parameters for the ACMS.

G7508471 - G3NT1T0 - FM31B200000001

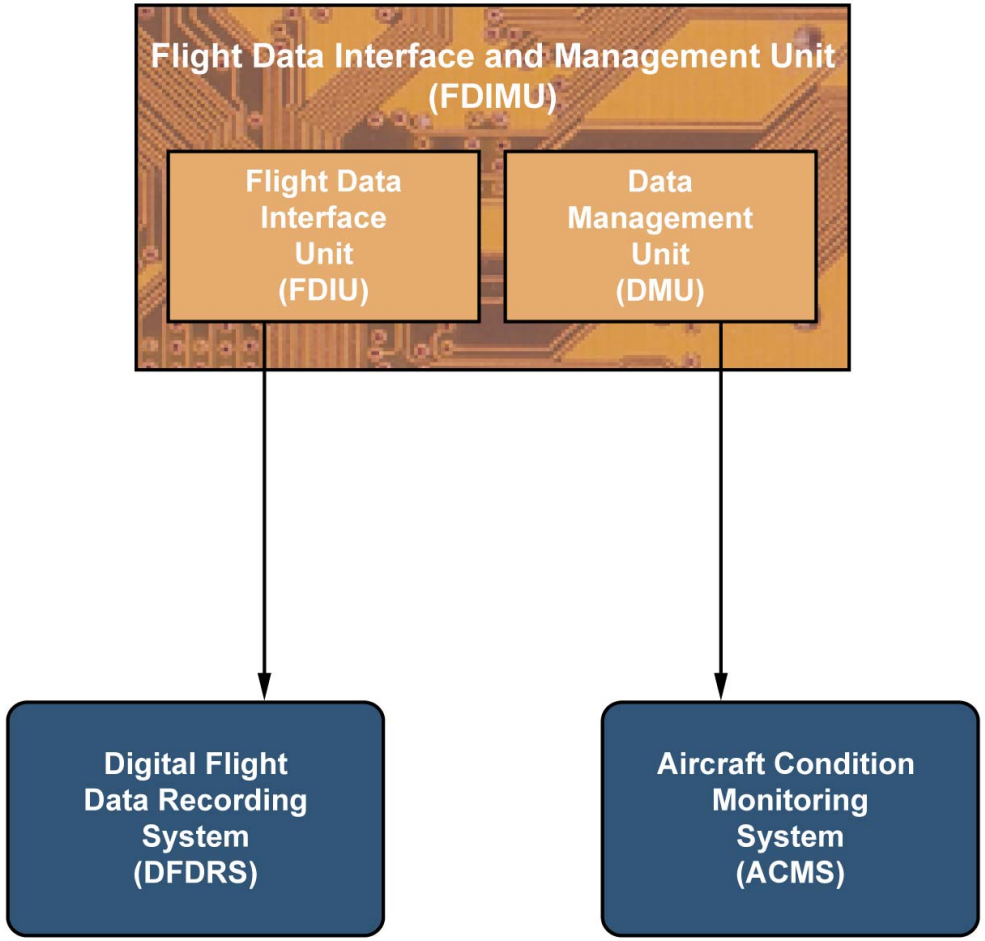

RECORDING SYSTEM - OVERVIEW

G7508471 - G3NT1T0 - FM31B200000001

RECORDING SYSTEMS LINE MAINTENANCE BRIEFING (2)

ACMS

PROCEDURE TO ENTER THE ACMS PARAMETER LABEL CALL-UP VIA MCDU

The access to the Aircraft Condition Monitoring System (ACMS) parameter Label Call-up functions is obtained only through MCDU 2 or 3 MENU page:
- from the ACMS PARAMETER CALL-UP menu select LABEL indication,
- from the LABEL CALL-UP CTRL page select LABEL MENU DISPLAY indication,
- enter the ARINC 429 characteristics of the desired parameter called parameter Label Call-up,
- the parameter Label Call-up is shown on the data field with the decimal and binary value of the related parameter,
- the Label Call-up parameters are now reviewed.

G7508471 - G3NT1T0 - FM31B200000001

PROCEDURE TO ENTER THE PARAMETER LABEL CALL-UP VIA MCDU

- ✓- Push the MCDU MENU mode key,
- ✓- Push the line key adjacent to ACMS indication,
- ✓- Push the line key adjacent to LABEL indication,
- ✓- Push the line key adjacent to DISPLAY indication,
- ✓- Enter on the MCDU keypad the Parameter Label Call-up into the scratchpad (e.g. EQ/SYS/LAB/SDI) and the optional /DATABITS,
- ✓- Push the line key 1L or 4L to take over the Parameter Label Call-up.

Only MCDU 2 & 3 are able to use ACMS functions

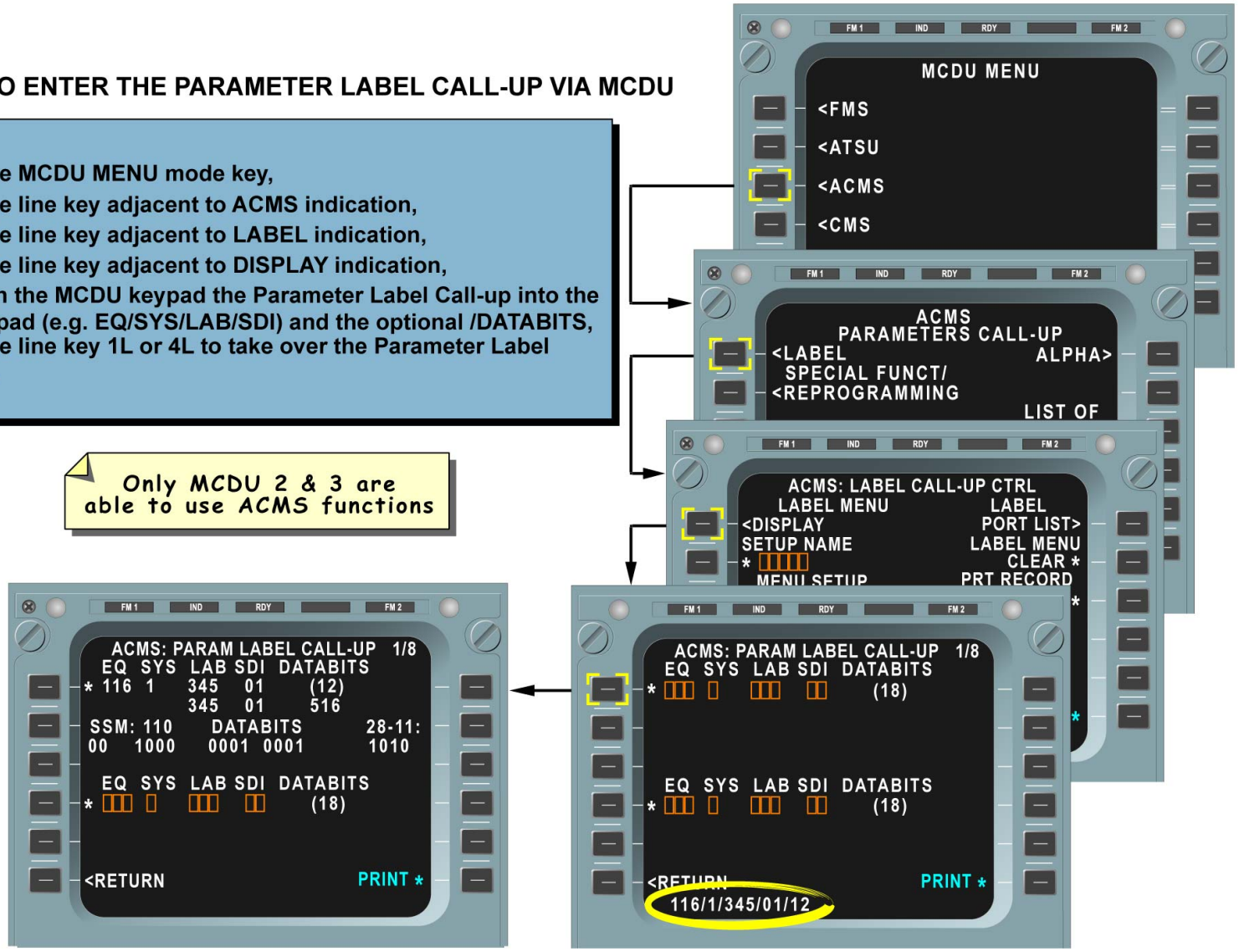

ACMS - PROCEDURE TO ENTER THE ACMS PARAMETER LABEL CALL-UP VIA MCDU

G7508471 - G3NT1T0 - FM31B200000001

RECORDING SYSTEMS LINE MAINTENANCE BRIEFING (2)

ACMS (continued)

PROCEDURE TO ENTER THE ACMS PARAMETER ALPHA CALL-UP VIA MCDU

The access to the ACMS parameter Alpha Call-up functions is obtained:
- from the ACMS PARAMETER CALL-UP menu select ALPHA indication,
- from the ALPHA CALL-UP CTRL page select ALPHA MENU DISPLAY indication,
- enter the Alpha numerical code of the desired Parameter called Alpha Call-up code,
- the parameter Alpha call-up code is shown on the data field with the related parameter in engineering units,
- the Alpha Call-up parameters are now reviewed.

G7508471 - G3NT1T0 - FM31B200000001

PROCEDURE TO ENTER THE ALPHA CALL-UP VIA MCDU

- ✓- Push the MCDU MENU mode key,
- ✓- Push the line key adjacent to ACMS indication,
- ✓- Push the line key adjacent to ALPHA indication,
- ✓- Push the line key adjacent to DISPLAY indication,
- ✓- Enter on the MCDU keypad the correct Alpha Call-up code,
- ✓- Push the line key desired to take over the Alpha Call-up.

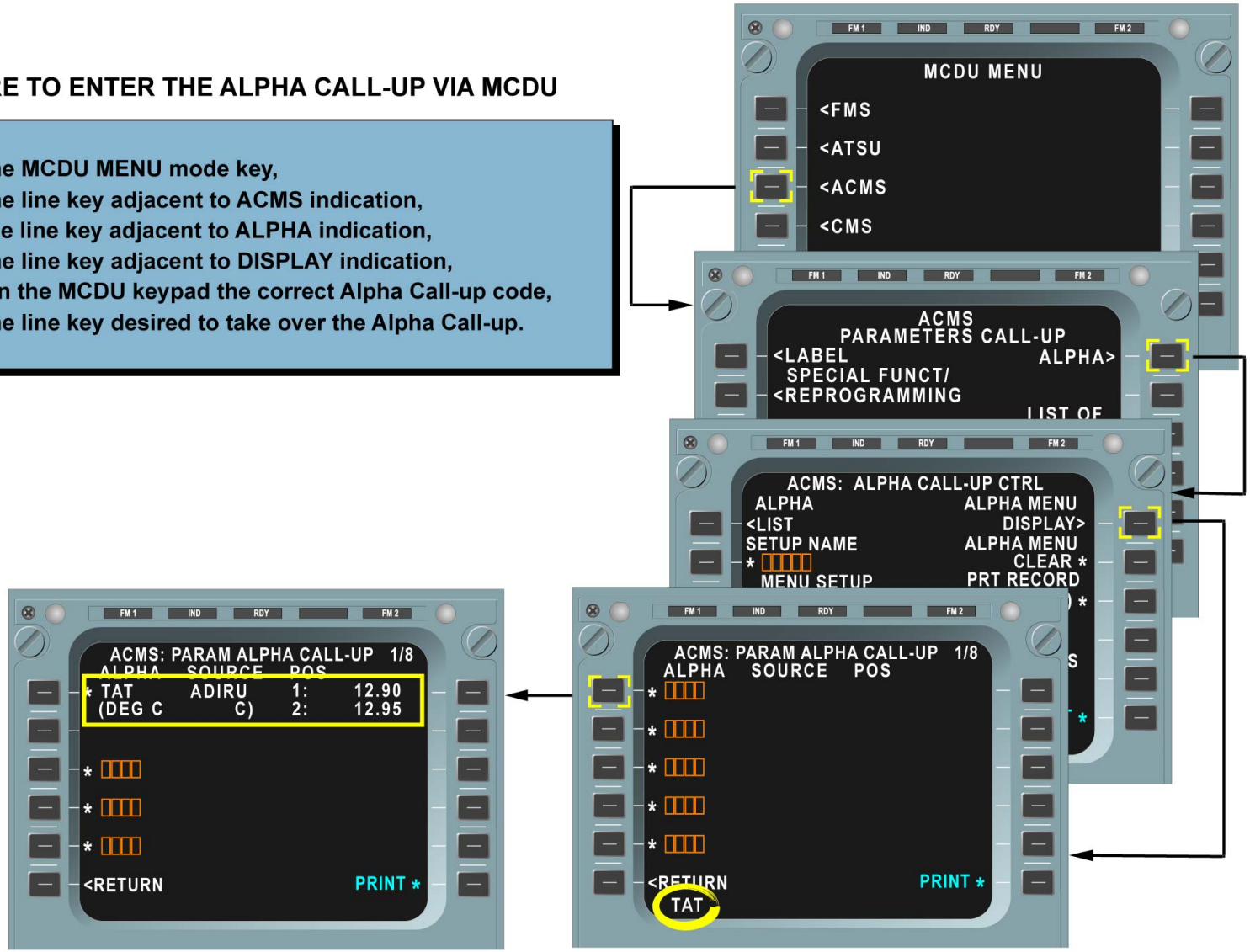

ACMS - PROCEDURE TO ENTER THE ACMS PARAMETER ALPHA CALL-UP VIA MCDU

RECORDING SYSTEMS LINE MAINTENANCE BRIEFING (2)

ACMS (continued)

MAINTENANCE TIPS

The Alpha numerical code of the desired parameter called Alpha Call-up code can be retrieved from a parameter list displayed in the AMM within the ACMS description and operation part.
The ARINC 429 characteristics of the desired parameter called Parameter Label Call-up can be retrieved from a parameter list displayed in the AMM, within the interface description of each system.
The parameter Label Call-up can also be shown in the Trouble Shooting Manual (TSM) if it is necessary to be used to troubleshoot a system. The Parameter Label Call-up is made up of:
- the EQuipment number,
- the SYStem number,
- the LABel parameter,
- the Source/Destination Identifier (SDI),
- the number of data bits (DATABITS).

It is important to enter the DATABITS value if it is different from the default value (18). The decimal value calculation is based on it.

G7508471 - G3NT1T0 - FM31B200000001

ALPHA CALL-UP LIST (EXTRACT OF AMM 31-36-00)

ALPHA CALL-UP	PARAMETER NUMBER (p)	PARAMETER NUMBER (s)	NAME	UNIT
ACID	15A.1.301.00	-	Aircraft Identification	
	15A.1.302.00	-		
	15A.1.303.00	-		
ACM1	07A.1.353.01	-	APU Maintenance Word 1	HEX
ACTP	15A.1.304.00	-	Aircraft Type	
ACW1	00D.1.070.00	-	APU Control Word 1	HEX
ACW2	00D.1.071.00	-	APU Control Word 2	HEX
ACW3	00D.1.072.00	-	APU Control Word 3	HEX
ACYC		-	APU Start Cycles	CYCLES
AFD1	07A.1.133.01	-	Averange Fuel Density	
			- Left Inner Tank	KGS/L
AFD2	00D.1.122.10	-	- Right Inner Tank	KGS/L
AFT1	00D.1.121.01	-	Averange Fuel Temperature	
			- Left Wing Collectors	DEG C
AFT2	00D.1.121.10	-	- Right Wing Collectors	DEG C
AHRS	07A.1.132.01	-	APU Operating Hours	HRS
AILL1	06C.1.310.01	06D.2.310.10	Aileron Position - Left Inner	DEGS
AILL2	06C.1.320.01	06D.2.320.10	Aileron Position - Left Inner	DEGS
AILR1	06C.1.330.01	06D.2.330.10	Aileron Position - Left Inner	DEGS
AILR2	06C.1.340.01	06D.2.340.10	Aileron Position - Left Inner	DEGS
ALID	15A.1.303.00	-	Airline Identification	
ALT	006.1.203.01	06D.2.203.10	Pressure Altitude	FT
ALTR	001.1.365.00	01D.2.365.00	Pressure Altitude Rate	FT/MIN

Depending on the aircraft type and effectivity, the Alpha call-up list can be different.

ACMS - MAINTENANCE TIPS

ARINC PARAMETER LIST (EXTRACT OF AMM 31-36-00)

EQ	SYSTEM	CHAPTER
05C	CPC 1 & 2	21-31-00
05D	ZC	21-63-00
039	MCDU 2 & 3	22-86-00
15B	FCU (AFS M1 BUS)	22-86-00
F15	FCU (EIS CPL-BUS)	22-86-00
E15	FCU (EIS CPR-BUS)	22-86-00
002	FMGEC 1 & 2 (FMC-BUS)	22-86-00
001	FMGEC 1 & 2 (FGC-BUS)	22-86-00
00A	FMGEC 1 & 2 (E GEN-BUS)	22-86-00
06C	FCDC 1 & 2	27-93-00
		27-94-00
		27-95-00
01B	SFCC 1 & 2	27-51-00
114	FCMC 1 & 2	28-51-00
F16	DMC (EFIS-BUS)	31-62-00
16B	DMC (ECAM-BUS)	31-62-00
026	FWC 1 & 2 (L1-BUS)	31-52-00
F26	FWC 1 & 2 (L2-BUS)	31-52-00
029	SDAC 1 & 2 (L1-BUS)	31-54-00
F29	SDAC 1 & 2 (L2-BUS)	31-54-00
06D	LGCIU 1 & 2	32-61-00
06E	BSCU 1 & 2	32-42-00
023	GPWS	34-48-00
06F	BMC 1 & 2 & 3 & 4	36-11-00
11A	MDDU	45-23-00
07A	ECB	49-61-00
116	EIVMU 1 & 2 & 3 & 4	73-25-00

Depending on the aircraft type and effectivity, the parameter list can be different.
Then, each set of parameters is in the applicable chapter.

ACMS - MAINTENANCE TIPS

This Page Intentionally Left Blank

G7508471 - G3NT1T0 - FM31B200000001

DFDRS GENERAL DESCRIPTION (3)

GENERAL

The Digital Flight Data Recording System (DFDRS) records flight parameters, from A/C systems, into the Digital Flight Data Recorder (DFDR) to fulfill the mandatory requirements of crash recording.

G7508471 - G3NT1T0 - FM31DF000000001

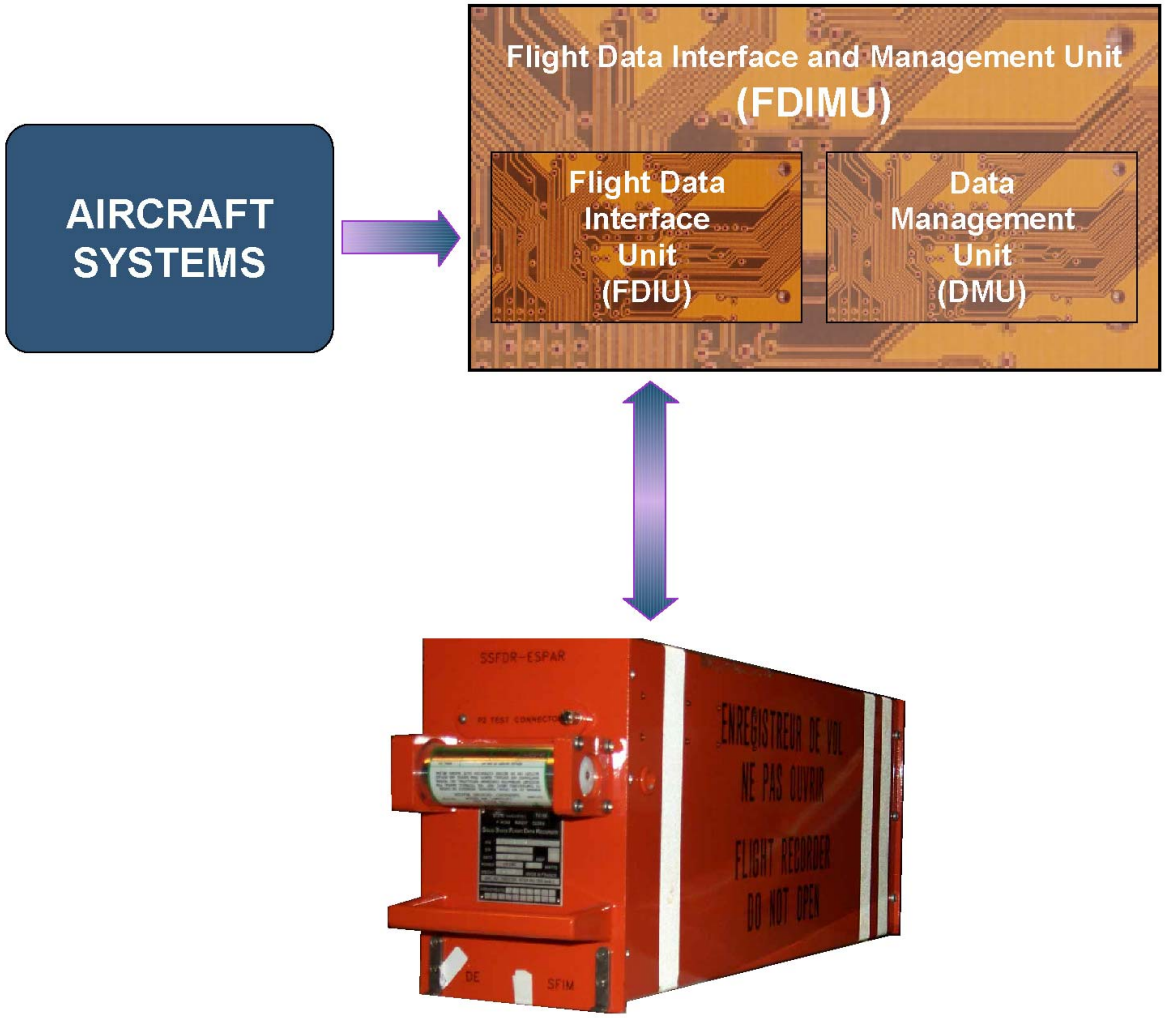

Digital Flight Data Recorder (DFDR)

GENERAL

G7508471 - G3NT1T0 - FM31DF000000001

DFDRS GENERAL DESCRIPTION (3)

ARCHITECTURE

The DFDRS includes the Flight Data Interface Unit (FDIU) part of the Flight Data Interface Management Unit (FDIMU), a DFDR, a Linear Accelerometer (LA), an EVENT P/B and a Recorder Ground Control P/BSW to meet the minimum requirements. A Quick Access Recorder (QAR) can be optionally installed.

G7508471 - G3NT1T0 - FM31DF000000001

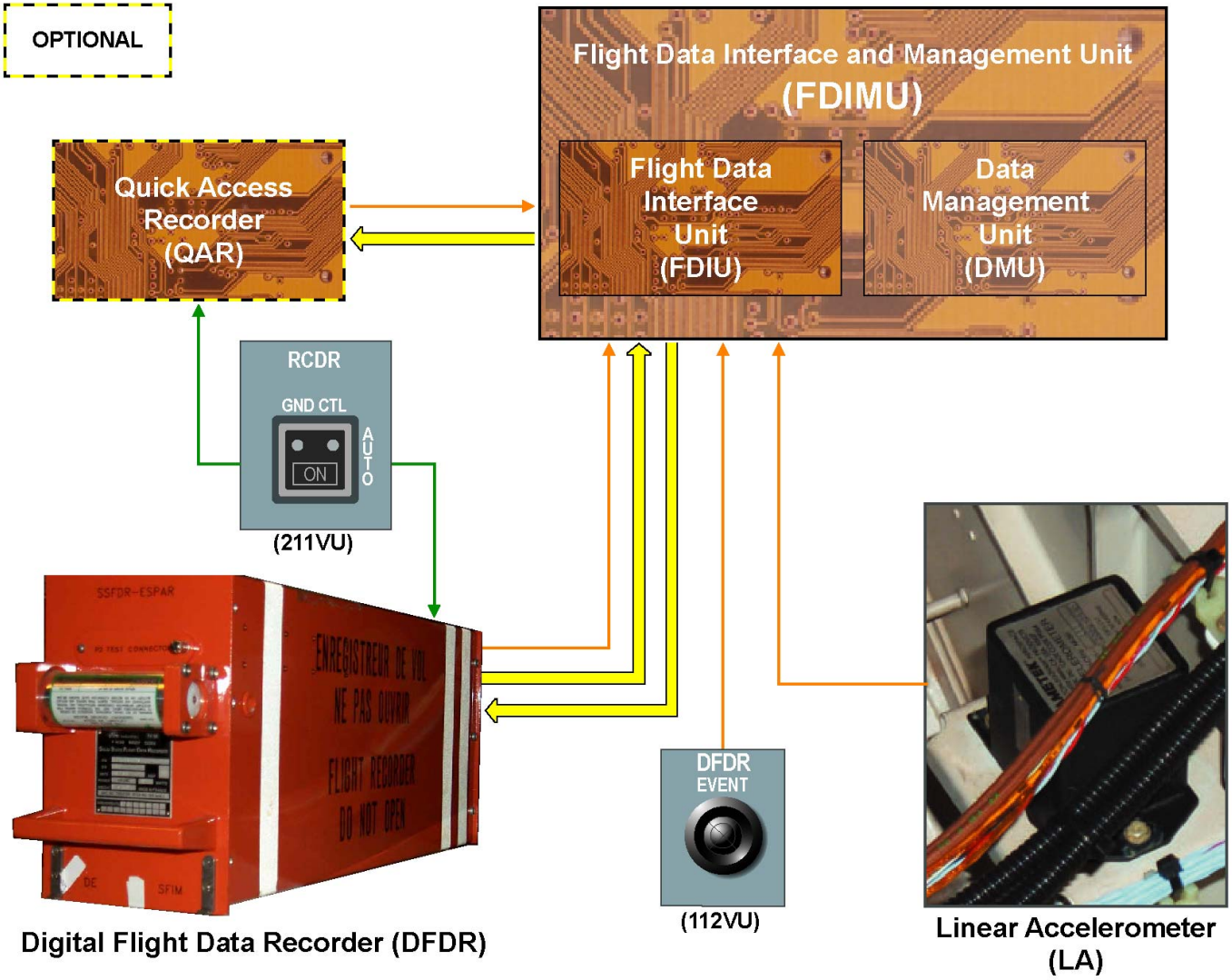

ARCHITECTURE

DFDRS GENERAL DESCRIPTION (3)

FDIU

The FDIU part of the FDIMU, located in the avionics bay, is a computer which collects various basic aircraft system parameters and converts them by internal processing. The aircraft system parameters are transmitted to the DFDR for recording. A time reference signal is sent to the Cockpit Voice Recorder (CVR) for synchronization with the DFDR.
The DFDRS Coding Panel, located in the avionics bay, gives to the FDIU identification information such as:
- aircraft tail number,
- airline identification,
- fleet identification,
- DFDR record version,
- and QAR speed.

The aircraft type is given to the FDIU directly by pin programming.

G7508471 - G3NT1T0 - FM31DF000000001

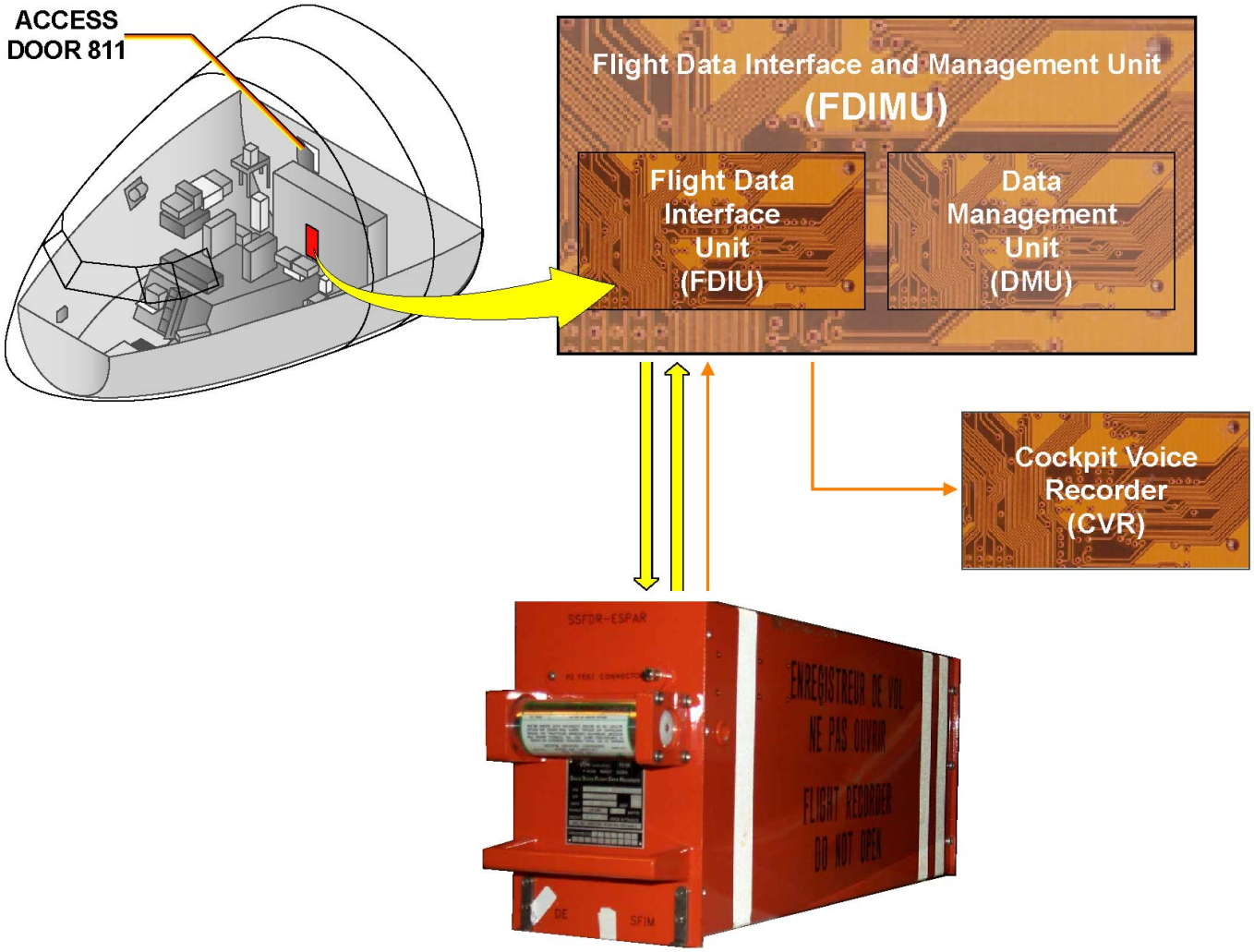

FDIU

G7508471 - G3NT1T0 - FM31DF000000001

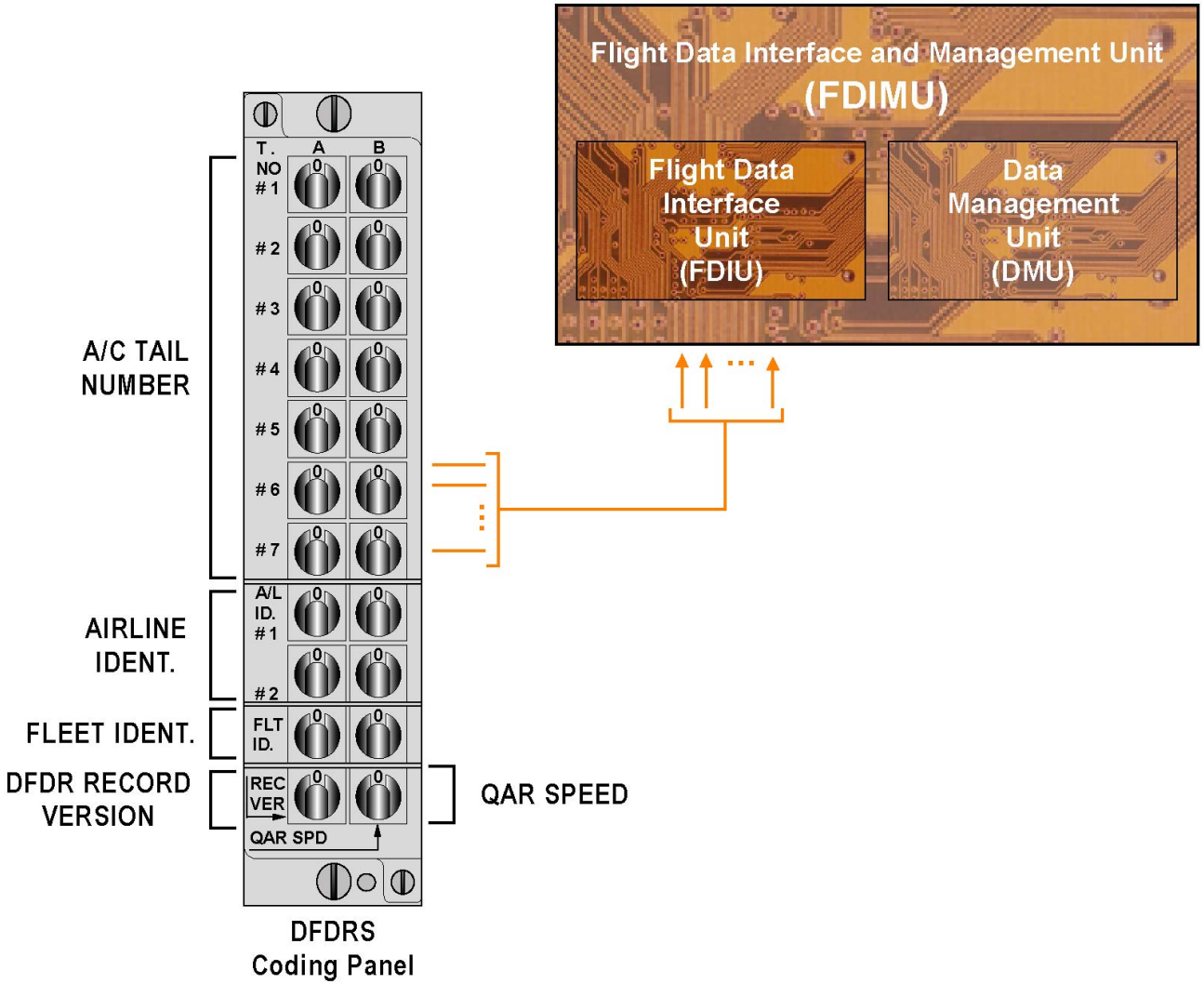
Flight Data Interface and Management Unit
(FDIMU)
Flight Data Interface Unit (FDIU)
Data Management Unit (DMU)
A/C TAIL NUMBER
AIRLINE IDENT.
FLEET IDENT.
DFDR RECORD VERSION
QAR SPEED
T. NO
A
B
#1
#2
#3
#4
#5
#6
#7
A/L ID.
FLT ID.
REC VER
QAR SPD
DFDRS Coding Panel

FDIU

This Page Intentionally Left Blank

G7508471 - G3NT1T0 - FM31DF000000001

DFDRS GENERAL DESCRIPTION (3)

DFDR

The DFDR is a recorder located in the aft part of the aircraft, which stores, in a solid state memory, the data of the last twenty-five hours collected by the FDIU. The memory board is located in a protected box. The front face of the DFDR includes an Underwater Locator Beacon (ULB).

G7508471 - G3NT1T0 - FM31DF000000001

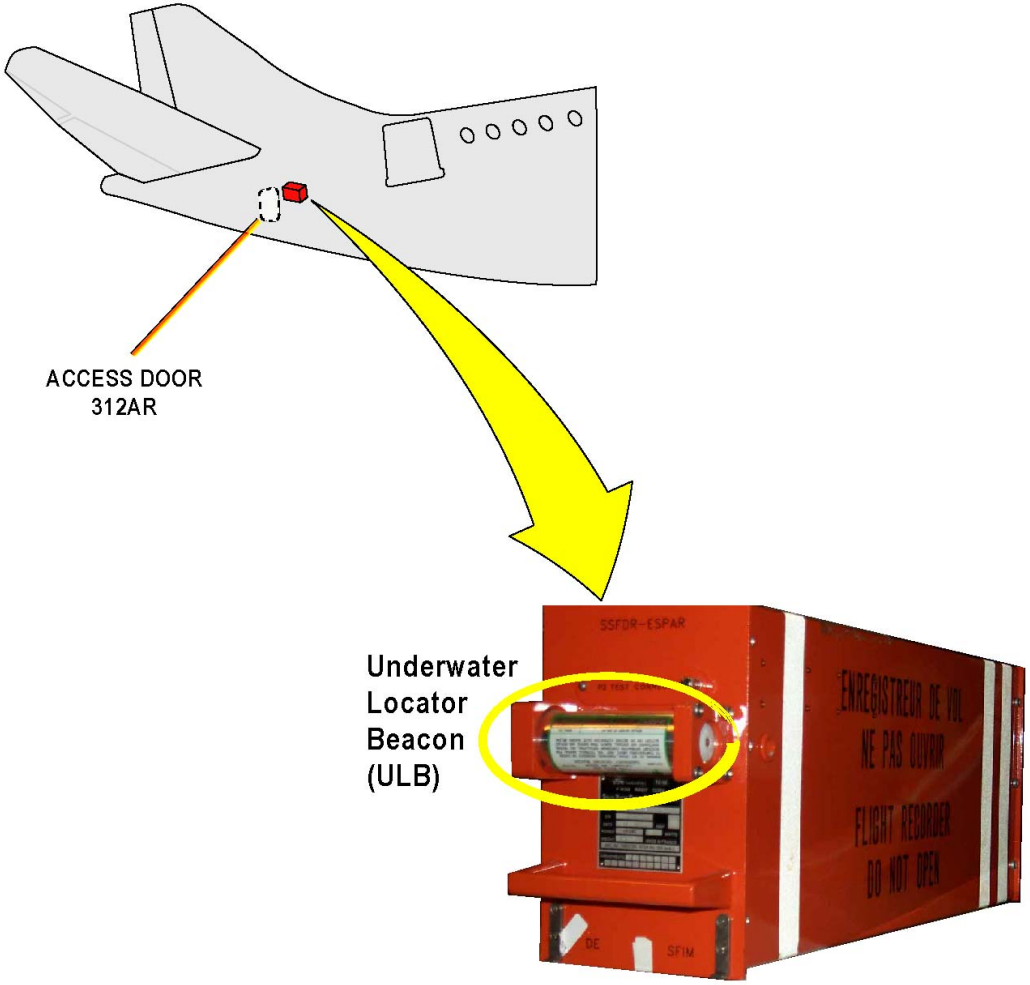

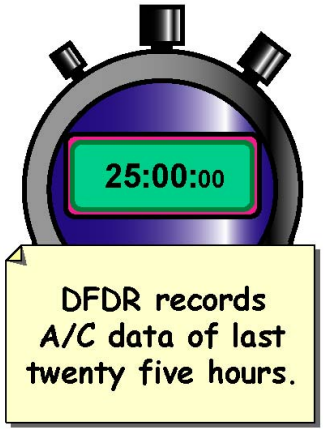

DFDR

G7508471 - G3NT1T0 - FM31DF000000001

DFDRS GENERAL DESCRIPTION (3)

LINEAR ACCELEROMETER

A Linear Accelerometer (LA) is installed in the aircraft center of gravity to give to the FDIU the data of three axis of acceleration. The FDIU receives the LA information via the System Data Acquisition Concentrators (SDACs).

G7508471 - G3NT1T0 - FM31DF000000001

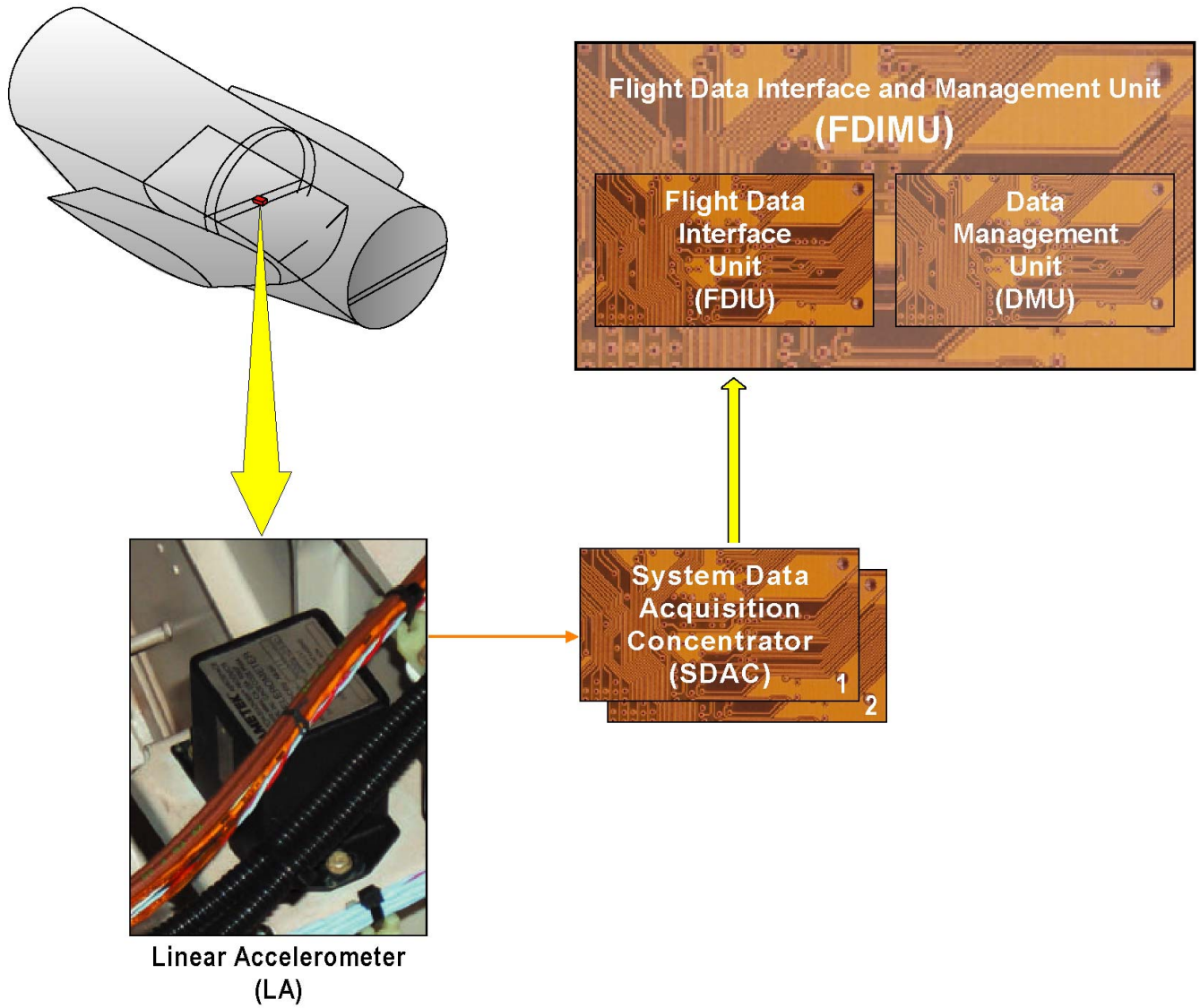

LINEAR ACCELEROMETER

G7508471 - G3NT1T0 - FM31DF000000001

DFDRS GENERAL DESCRIPTION (3)

DFDR EVENT

An EVENT P/B is located on the cockpit center pedestal. When pushed, the EVENT P/B is used to record an event mark in the DFDR memory. This enables the technician to quickly find the event out of the 25 hours of data.

G7508471 - G3NT1T0 - FM31DF000000001

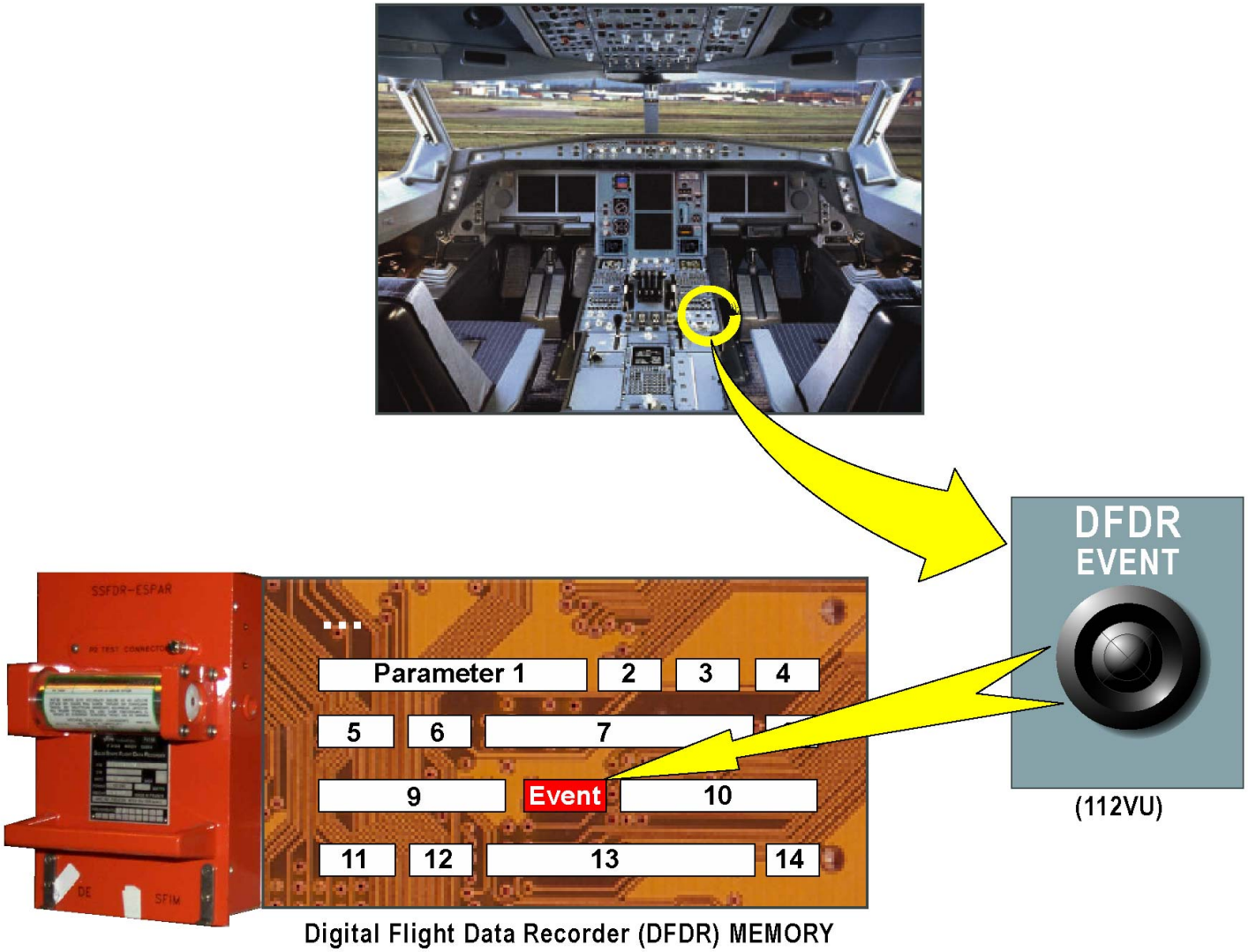
DFDR
EVENT
(112VU)
SSFDR-ESFAR
...
Parameter 1
2
3
4
5
6
7
9
Event
10
11
12
13
14
Digital Flight Data Recorder (DFDR) MEMORY

DFDR EVENT

DFDRS GENERAL DESCRIPTION (3)

QAR (OPTION)

The DFDR parameters can be optionally recorded on an optical disk located in the Quick Access Recorder (QAR). This lets the performance or condition monitoring tasks be carried out through the Ground Support Equipment (GSE). The QAR is installed in the avionics compartment.

G7508471 - G3NT1T0 - FM31DF000000001

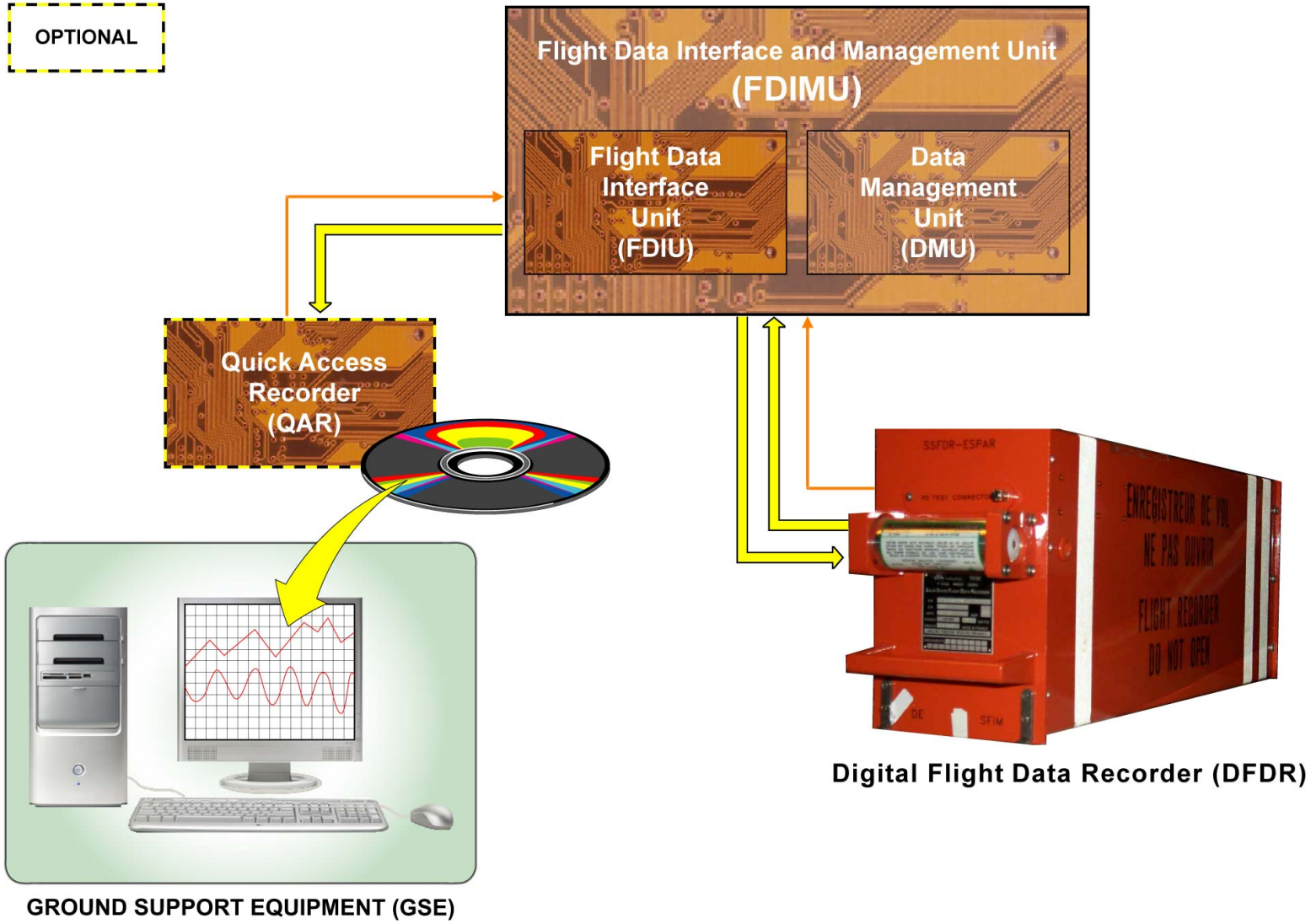
OPTIONAL
Flight Data Interface and Management Unit
(FDIMU)
Flight Data Interface Unit (FDIU)
Data Management Unit (DMU)
Quick Access Recorder (QAR)
SSFDR-ESPAR
ENREGISTREUR DE VOL
NE PAS OUVRIR
FLIGHT RECORDER
DO NOT OPEN
Digital Flight Data Recorder (DFDR)
GROUND SUPPORT EQUIPMENT (GSE)

QAR (OPTION)

DFDRS GENERAL DESCRIPTION (3)

POWER SUPPLY

The DFDR and QAR power up is controlled through a power interlock circuit. The DFDR is automatically supplied when one engine is started and will stop five minutes after the last engine shutdown. On ground, for test and maintenance purposes, as well as for preflight check, it is possible to supply power to the DFDR and QAR by pressing the RCDR GND CTL P/BSW on the overhead panel.

G7508471 - G3NT1T0 - FM31DF000000001

OPTIONAL

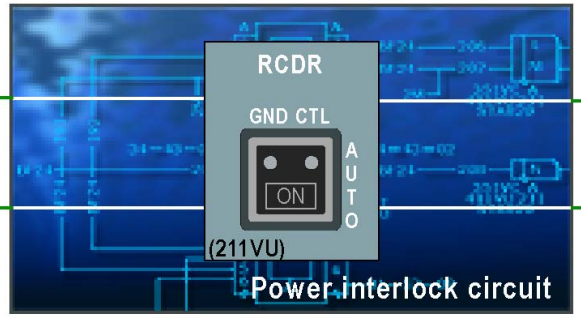

POWER SUPPLY

Digital Flight Data Recorder (DFDR)

Recorders are powered:

- ✓ If 1 engine is started,
- ✓ Until 5 minutes after last engine shutdown,
- ✓ If RCDR GND CTL P/B is pushed on ground.

POWER SUPPLY

DFDRS D/O (3)

FDIMU

The recorder system is controlled by the Flight Data Interface Management Unit (FDIMU). The FDIMU integrates the former Flight Data Interface Unit (FDIU)(DFDRS function) and Data Management Unit (DMU)(ACMS function) with PCMCIA interface into a single Line Replaceable Unit (LRU). These two functions operate independently from each other. The FDIU section is dedicated to the Digital Flight Data Recording System (DFDRS) acquiring mandatory parameters to record for incident/accident investigations by the airworthy authorities. The DMU section is dedicated to the Aircraft Condition Monitoring System (ACMS) monitoring aircraft systems condition, mainly engines and APU systems, as well as aircraft performance in order to schedule maintenance tasks and operation recommendations, and for trouble shooting assistance. In addition, for PCMCIA recording purposes, data transmission from the FDIU part to the DMU part is given through an internal ARINC 429 data bus.

FDIU

The FDIU section is the heart of the DFDRS. The main functions of the FDIU are to collect all critical flight parameters from various aircraft systems and to send them to the Digital Flight Data Recorder (DFDR) via an ARINC 717 data bus. At the same time the FDIU sends an audio signal with encoded Greenwich Mean Time (GMT) information to the Cockpit Voice Recorder (CVR) for synchronization with the DFDR.
The Linear Accelerometer (LA) is installed on the aircraft center of gravity, and supplies 3 axes acceleration data in analog format to the System Data Acquisition Concentrator (SDAC), which transmits information to the FDIU via an ARINC 429 data bus. The PCMCIA interface and the Multipurpose Disk Drive Unit (MDDU) let the FDIU upload the application software. The PCMCIA card stores DFDRS control flight parameters independently from the recording done in the Quick Access Recorder (QAR). The PCMCIA board is managed by the DMU processor, and is accessible through an access door on the FDIMU front face.
When the FDIU receives an analog signal from the DFDR EVENT P/B, it generates an event mark in the DFDR memory.
The DFDRS Coding Panel gives to the FDIU analog signals of aircraft tail number, airline indent, fleet indent, DFDR record version and QAR recording speed. The aircraft type is given to the FDIU directly by pin programming.
The FDIU is installed with a BITE function that reports DFDRS status to the Central Maintenance System (CMS).

QAR FUNCTION

The optional QAR records the raw data, sent by the FDIU part to the DFDR, on an optical disk. The DFDR and QAR recording are simultaneously controlled through the power interlock circuit. On the ground, it is possible to supply power to DFDR and QAR by pressing the RCDR GND CTL pushbutton. The QAR memory is read by a specific QAR Analysis Ground Station (AGS) allowing aircraft performance and condition monitoring tasks. The QAR recording speed can be set from the DFDRS Coding Panel, located in the avionics bay. The QAR includes a BITE function, which reports its status to the FDIU.

G7508471 - G3NT1T0 - FM31D4F31D30402

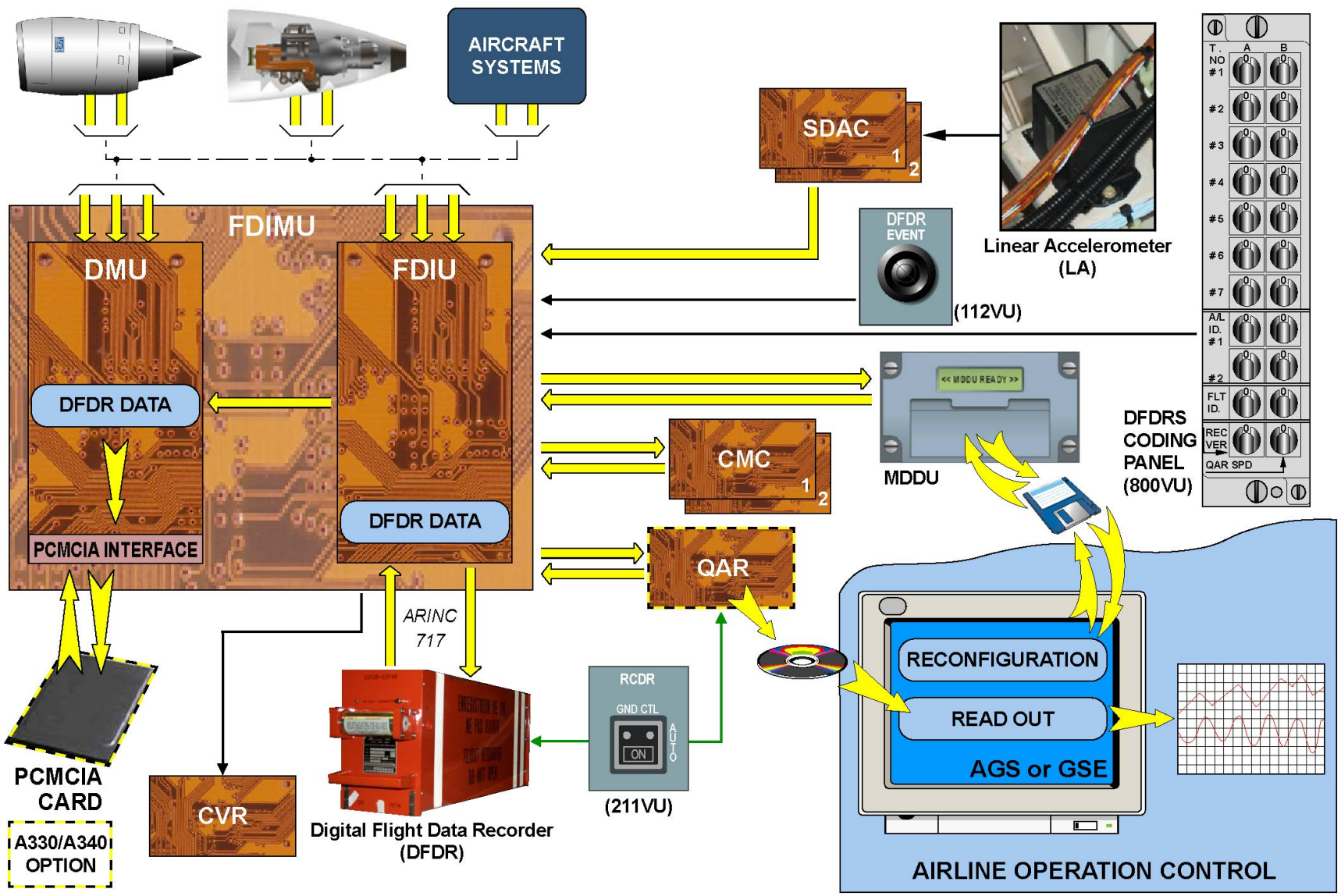

FDIMU ... QAR FUNCTION

G7508471 - G3NT1T0 - FM31D4F31D30402

DFDRS D/O (3)

CODE COMPARISON

The transfer of data from the FDIU to the DFDR and QAR (if installed) is done via digital data links with specific format. The data link format between the FDIU and the DFDR is called Harvard Biphase. The data link format between the FDIU and the QAR is called Bipolar RZ (Return to Zero). Here is an example of the same binary word by the two codes. Note that the ARINC 429 transmission is also Bipolar RZ.

G7508471 - G3NT1T0 - FM31D4F31D30402

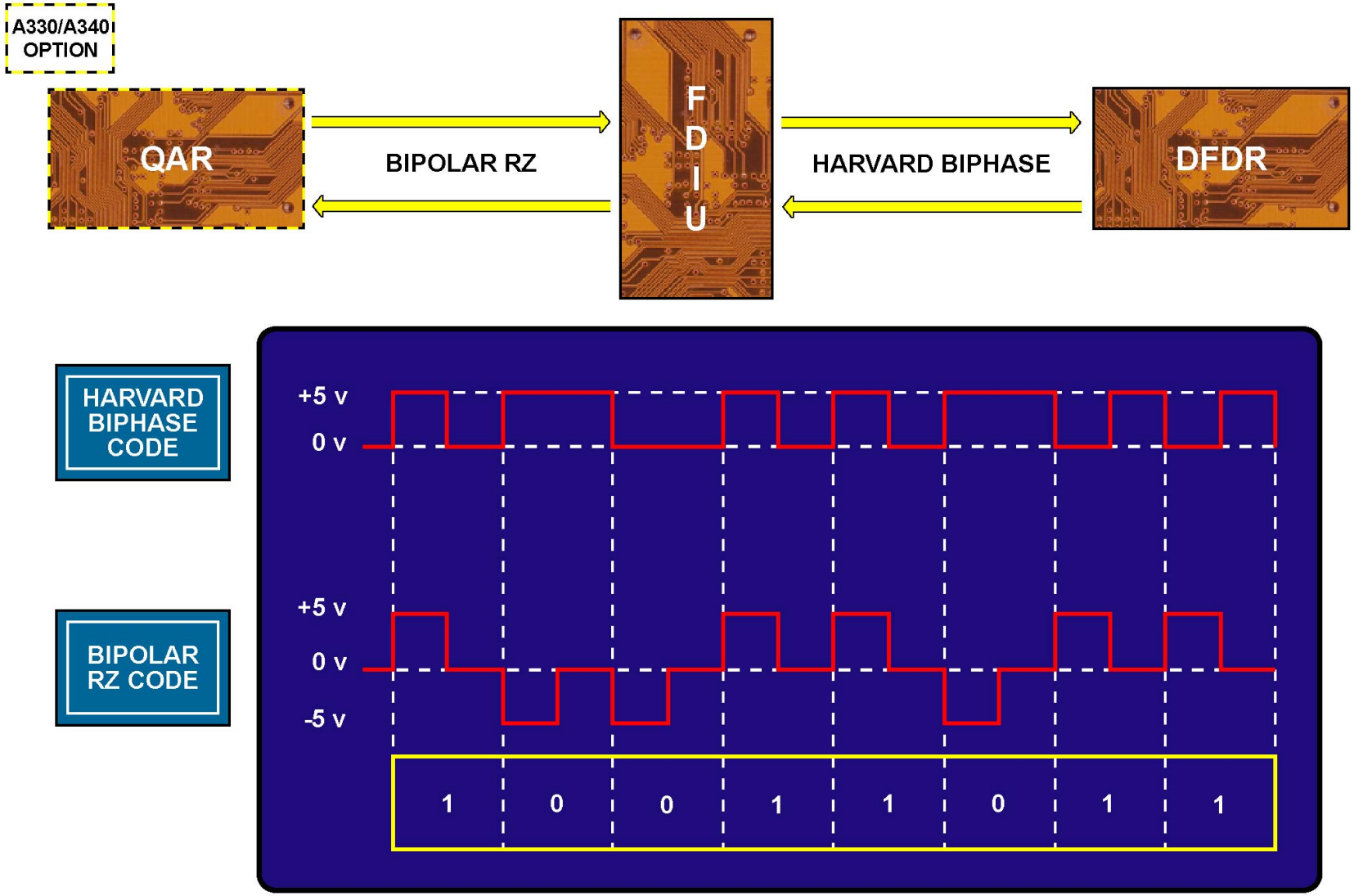

CODE COMPARISON

DFDRS D/O (3)

FRAME DESCRIPTION

The data is sent to the recorders on frames, which are composed of 4 subframes. A frame lasts 4 seconds and is repeated every 4 seconds. Depending on the authority requirements, the subframe will contain 256 or 512 words of 12 bits.

WORD ASSIGNMENT

The collected parameters are transmitted from the FDIU to the recorders and stored in defined word slots. Most of the parameters are repeated every second, some every 2 seconds or every 4 seconds. One word can contain one or more parameters.
It should be noted that acceleration data is more often transmitted every second and documentary data less often every 4 seconds.

G7508471 - G3NT1T0 - FM31D4F31D30402

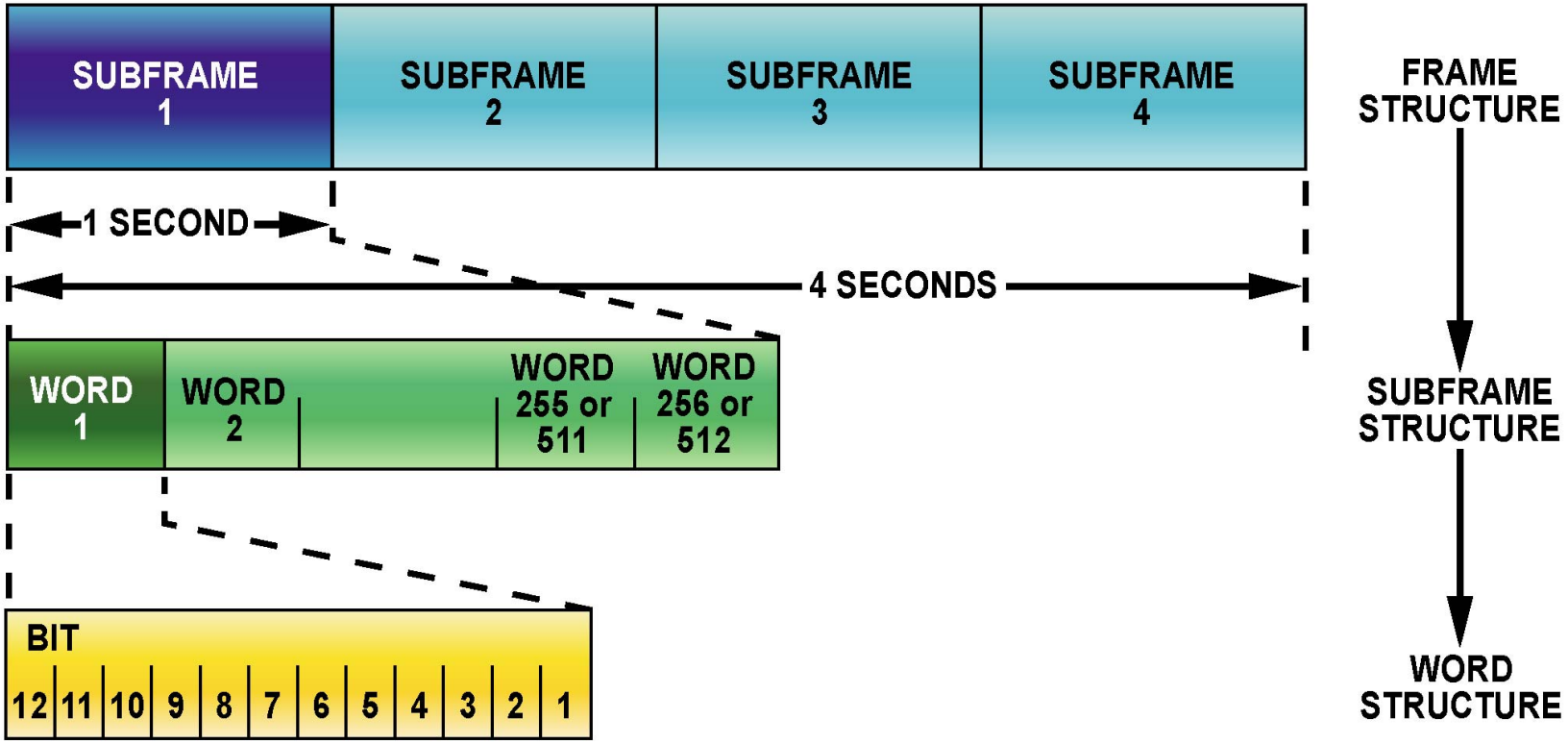

FRAME DESCRIPTION & WORD ASSIGNMENT

G7508471 - G3NT1T0 - FM31D4F31D30402

DFDRS D/O (3)

DATA SOURCES

Up to 330 mandatory parameters from 30 computers, receivers or transceivers can be transmitted to the FDIU and recorded.

G7508471 - G3NT1T0 - FM31D4F31D30402

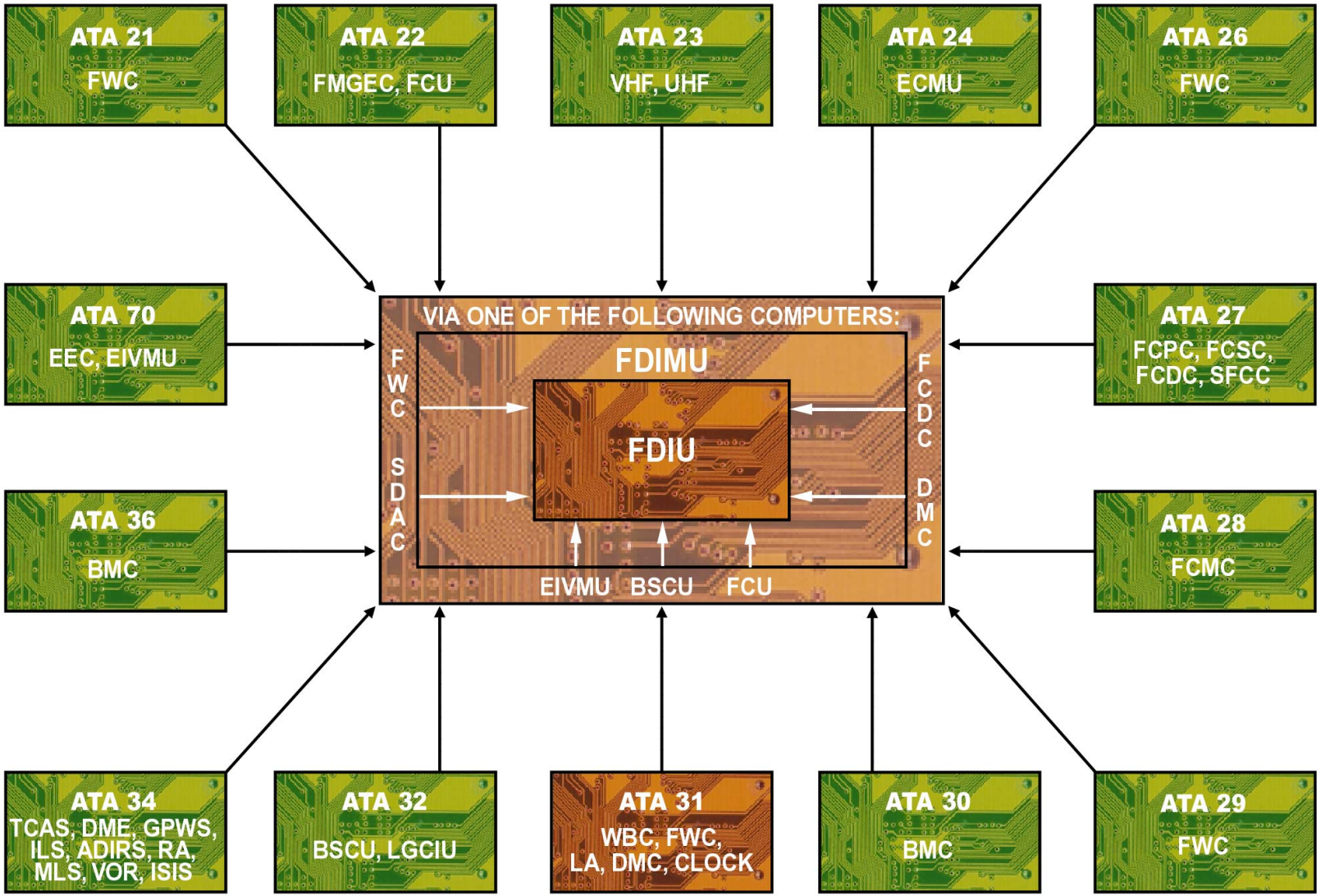

DATA SOURCES

G7508471 - G3NT1T0 - FM31D4F31D30402

DFDRS SOURCES D/O (3)

GENERAL

The Flight Data Interface And Management Unit (FDIMU) receives ARINC 429 buses from various computers for A/C and engine data to be recorded by the Digital Flight Data Recorder (DFDR) and the Quick Access Recorder (QAR), if installed. It is also connected by ARINC buses to the Central Maintenance Computers (CMCs). The FDIMU is also installed with discrete Inputs/Outputs for Digital Flight Data Recorder System (DFDRS) Coding Panel, pin programming, system status and for the EVENT pushbutton.

SDAC

The FDIMU receives data from each System Data Acquisition Concentrator (SDAC) on an ARINC bus. It sends one discrete signal to each SDAC. The parameters received are the following ones:
- the 3 axes accelerations from the Linear Accelerometer (LA),
- radio communication keying from VHF and HF transceivers,
- AC electrical power bus status from Electrical Contactor Management Units (ECMUs),
- DC electrical power bus status,
- bleed air conditioning and pneumatic ice protection status from Bleed Monitoring Computers (BMCs),
- LP fuel valve position from Electronic Engine Control (EEC) units.

DMC

The FDIMU can receive data from the Display Management Computers (DMCs) on ARINC buses. The parameters received are the following ones:
- Air Data and navigation information from Air Data/Inertial Reference Units (ADIRUs),
- engine information from FADECs units,
- flaps and slats position from Slat Flap Control Computer (SFCCs),
- Auto Flight System (AFS) information from Flight Management Guidance and Envelope Computers (FMGECs),
- radio navigation information from ILS and VOR receivers, Radio Altimeter (RA), Distance Measuring Equipment (DME) and Traffic Collision,
- avoidance system (TCAS) transceivers,
- Electronic Flight Instrument System (EFIS) and flight guidance selection from Flight Control Unit (FCU),
- Electronic Centralized Aircraft Monitoring (ECAM) control and switching panel selections,
- Gross Weight and Center of Gravity from Weight and Balance Computers (WBCs) if installed,
- fuel quantity in trim tank from Fuel Control and Monitoring Computers (FCMCs),
- fuel flow from FADECs.

FWC

The FDIMU receives data from each Flight Warning Computer (FWC) on an ARINC bus. The parameters received are the following ones:
- warnings and computer failures,
- L/G status from Landing Gear Control and Interface Units (LGCIUs),
- ECAM status,
- engine start valve position from BMCs,
- flight phase information.

FCDC

The FDIMU receives data from each Flight Control Data Concentrator (FCDC) on an ARINC bus. The parameters received are the following ones:
- spoiler position and speed brake selection from Flight Control Primary Computers (FCPCs),

G7508471 - G3NT1T0 - FM31D5F31D40602

- roll, pitch and yaw control surface positions and pilot inputs from FCPCs and Flight Control Secondary Computers (FCSCs),
- pitch trim position from FCPCs.

BSCU

The FDIMU receives the brake pressure, auto brake status and pedal positions from the Braking/Steering Control Unit (BSCU) on 2 ARINC buses.

EIVMU

The FDIMU receives data from each Engine Interface and Vibration Monitoring Unit (EIVMU) on an ARINC bus. The parameters received are the following ones:
- engine identification,
- oil quantity,
- engine vibration,
- and HP fuel valve position from FADECs.

CMC

The FDIU sends data to CMC 1 and 2 on an ARINC bus and receives data from CMC1 on another bus. The FDIU dialogues with the CMCs for BITE and tests. The FDIMU receives flight number and city pair information from CMC1.

EVENT

The FDIMU receives the event signal from the EVENT pushbutton on one discrete input.

DFDRS CODING PANEL

The FDIMU receives the A/C tail number, Airline Ident, Fleet Ident and DFDR record version from the DFDRS Coding Panel on discrete inputs.

The FDIMU receives the A/C type information by pin programming on discrete inputs.

DFDR AND DMU

The FDIU sends the data for recording to the DFDR in Harvard Biphase format on one output bus and receives the playback data in the same format on one input bus. The DFDR status (BITE IN) is transferred with a discrete signal to the SDAC, which transmits information to the FDIU, through an ARINC bus, for the Centralized Maintenance System (CMS). The FDIU Part of the FDIMU sends DFDR parameters to the Data Management Unit (DMU) Part of the FDIMU through an ARINC bus for recording on PCMCIA card, if installed.

CVR

The FDIMU sends to the Cockpit Voice Recorder (CVR) an audio signal with encoded time information, via the Audio Management Unit (AMU), to make the synchronization of the CVR with the DFDR.

CLOCK

The FDIMU receives the time information from the Clock on one ARINC bus.

QAR (OPTION)

The FDIMU sends the data for recording to the QAR in Bipolar RZ format on one bus. The FDIU receives 2 discrete signals for QAR status, sent to the CMCs.

ISIS

The Integrated Standby Instrument System (ISIS) indicator replaces the conventional standby instruments. It gives air and inertial data to the FDIU via an ARINC bus.

G7508471 - G3NT1T0 - FM31D5F31D40602

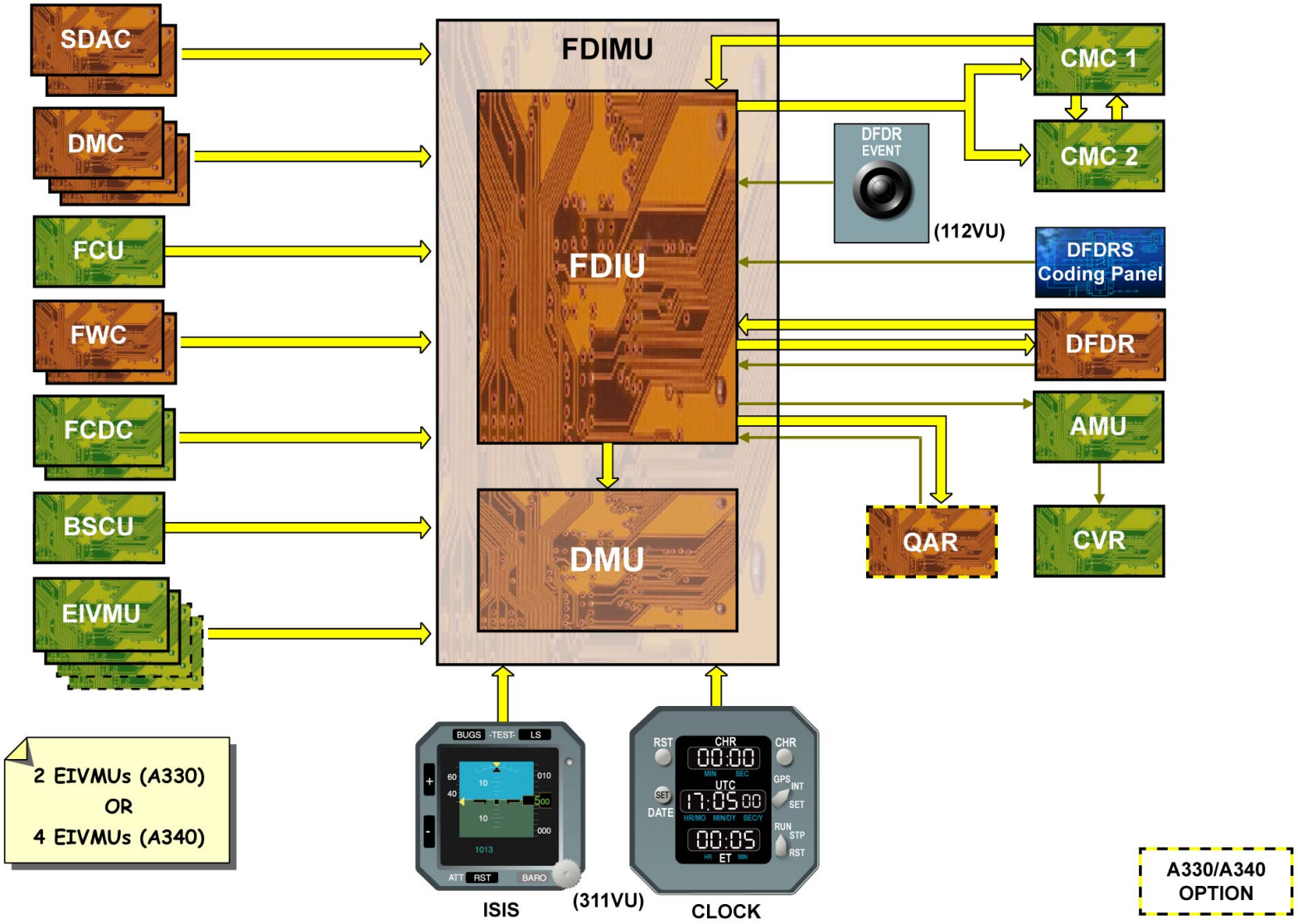

GENERAL ... ISIS

G7508471 - G3NT1T0 - FM31D5F31D40602

This Page Intentionally Left Blank

G7508471 - G3NT1T0 - FM31D5F31D40602

ACMS GENERAL DESCRIPTION (3)

GENERAL

The main functions of the Aircraft Condition Monitoring System (ACMS) are to monitor the engine condition, APU condition and aircraft performance, as well as trouble shooting assistance. It collects, records and processes aircraft system data, which can be retrieved and viewed through the MCDU, accessible through removable memory, or printed on the aircraft printer.

G7508471 - G3NT1T0 - FM31DG000000001

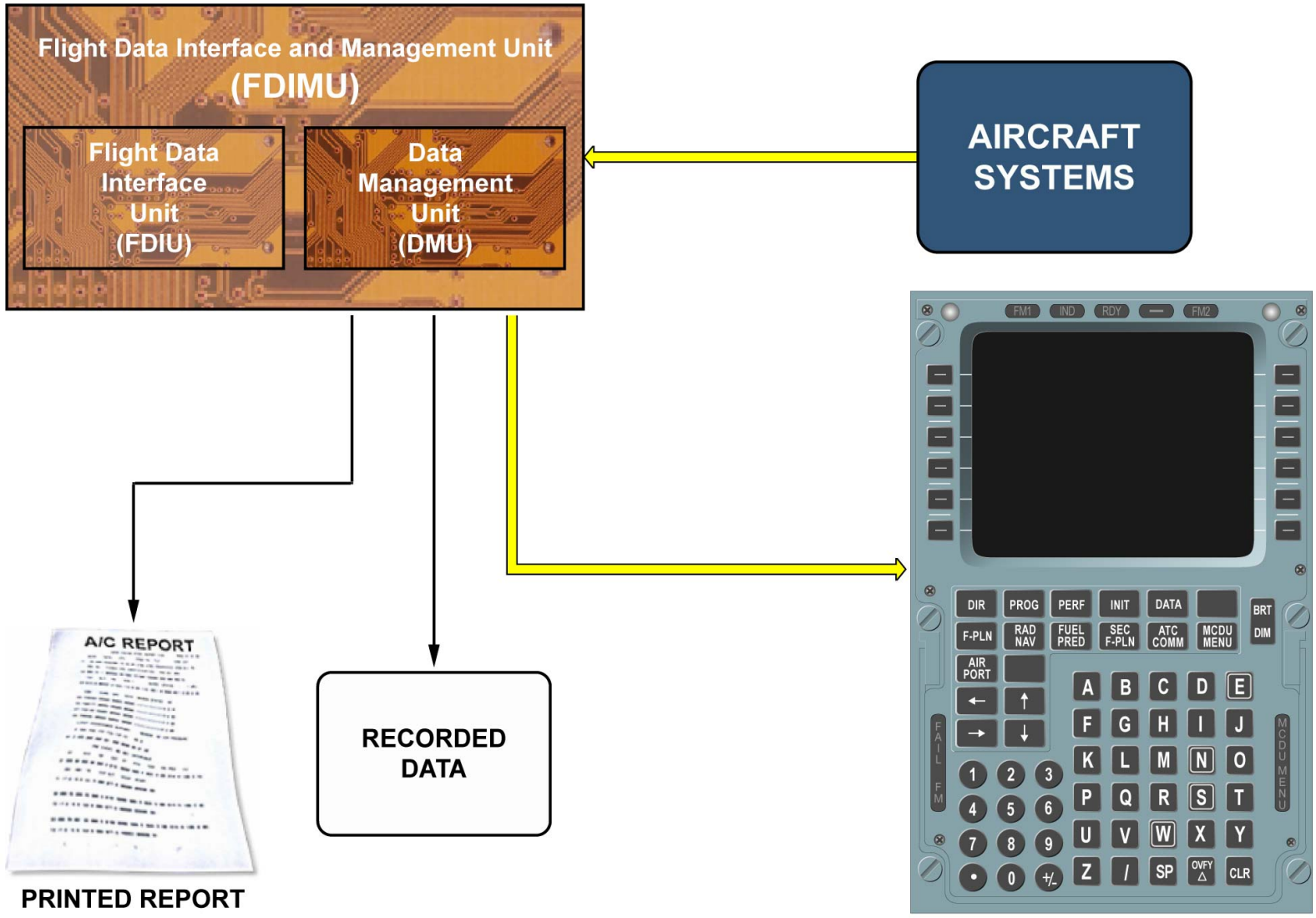
Flight Data Interface and Management Unit
(FDIMU)
Flight Data Interface Unit (FDIU)
Data Management Unit (DMU)
AIRCRAFT SYSTEMS
A/C REPORT
PRINTED REPORT
RECORDED DATA
FM1
IND
RDY
FM2
DIR
PROG
PERF
INIT
DATA
BRT
DIM
F-PLN
RAD NAV
FUEL PRED
SEC F-PLN
ATC COMM
MCDU MENU
AIR PORT
FAIL FM
MCDU MENU
SP
OVFY
CLR

GENERAL

ACMS GENERAL DESCRIPTION (3)

ARCHITECTURE

The ACMS includes:
- the Data Management Unit (DMU) part of the Flight Data Interface and Management Unit (FDIMU) including a Smart ACMS Recorder (SAR), and a Personal Computer Memory Card International Association (PCMCIA) interface,
- an "on-ground" equipment called Ground Support Equipment (GSE),
- an optional Wireless Digital ACMS Recorder (WDAR).

G7508471 - G3NT1T0 - FM31DG000000001

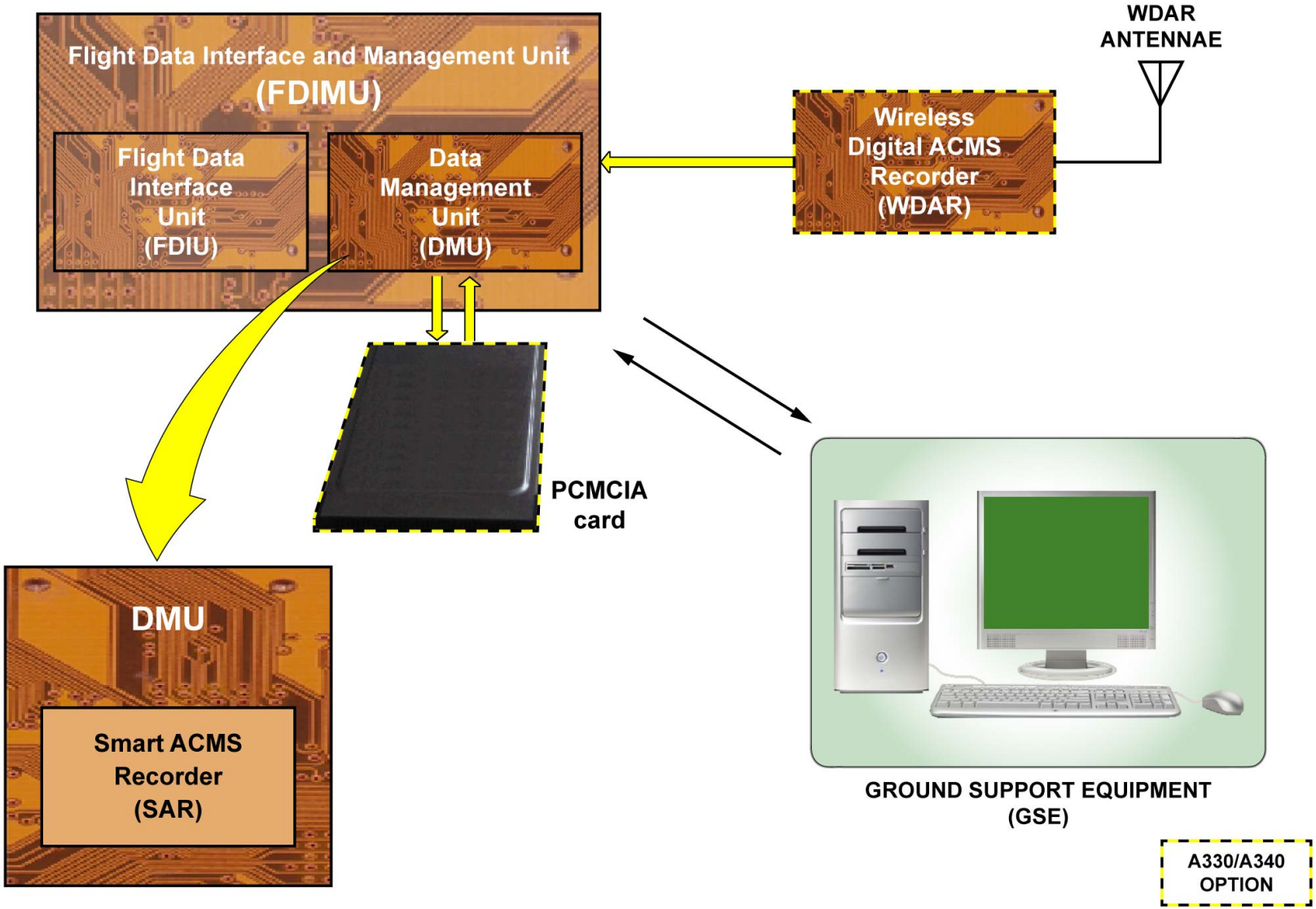

ARCHITECTURE

G7508471 - G3NT1T0 - FM31DG00000001

ACMS GENERAL DESCRIPTION (3)

AIRCRAFT SYSTEMS

Various aircraft systems are connected to the DMU. These input sources give to the DMU engine parameters, APU parameters and aircraft parameters.

G7508471 - G3NT1T0 - FM31DG000000001

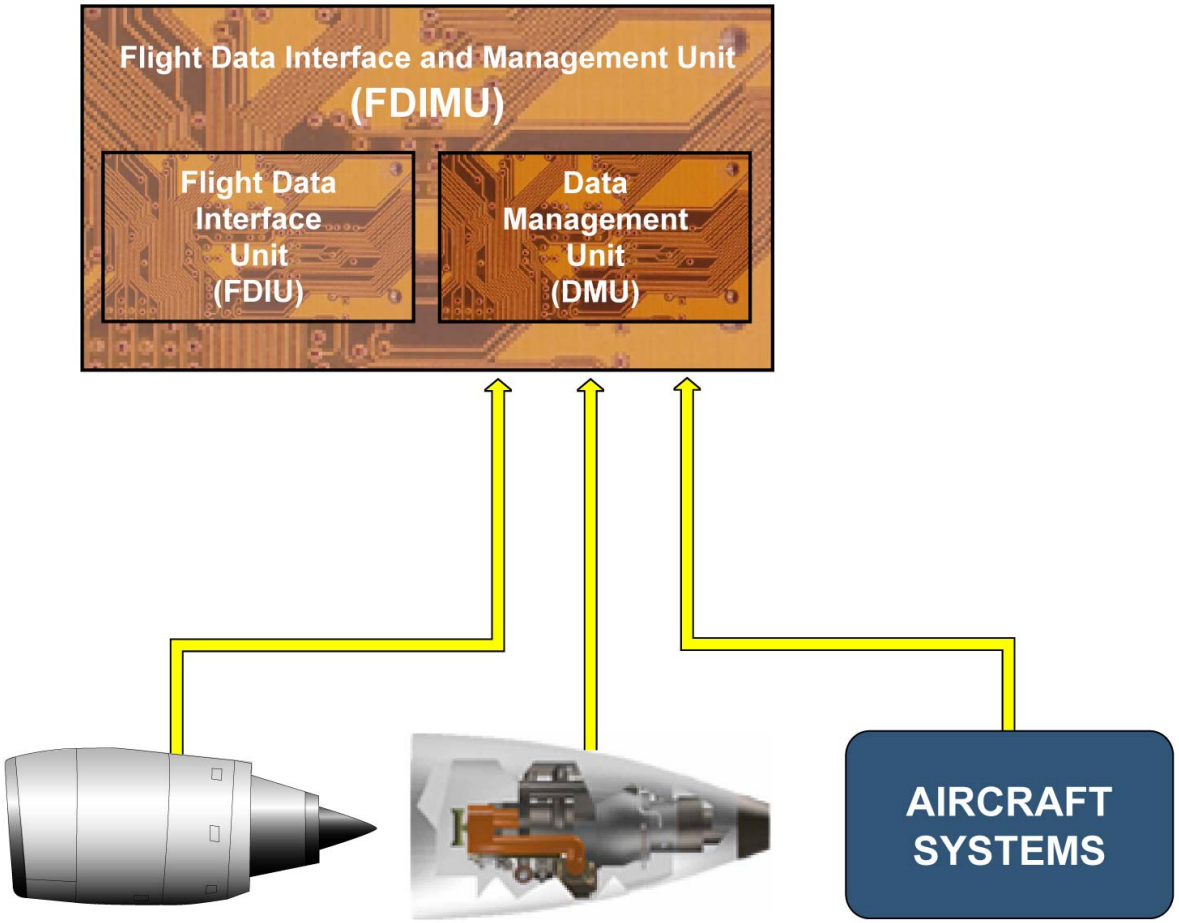

AIRCRAFT SYSTEMS

ACMS GENERAL DESCRIPTION (3)

DMU

The DMU, located in the FDIMU, collects, stores and processes various aircraft system data. This data can be stored in the internal DMU memory, on the PCMCIA card and/or in the WDAR, if installed. The collected data is used to generate various condition reports. These reports can be stored in the internal DMU memory, or on the PCMCIA card.

G7508471 - G3NT1T0 - FM31DG000000001

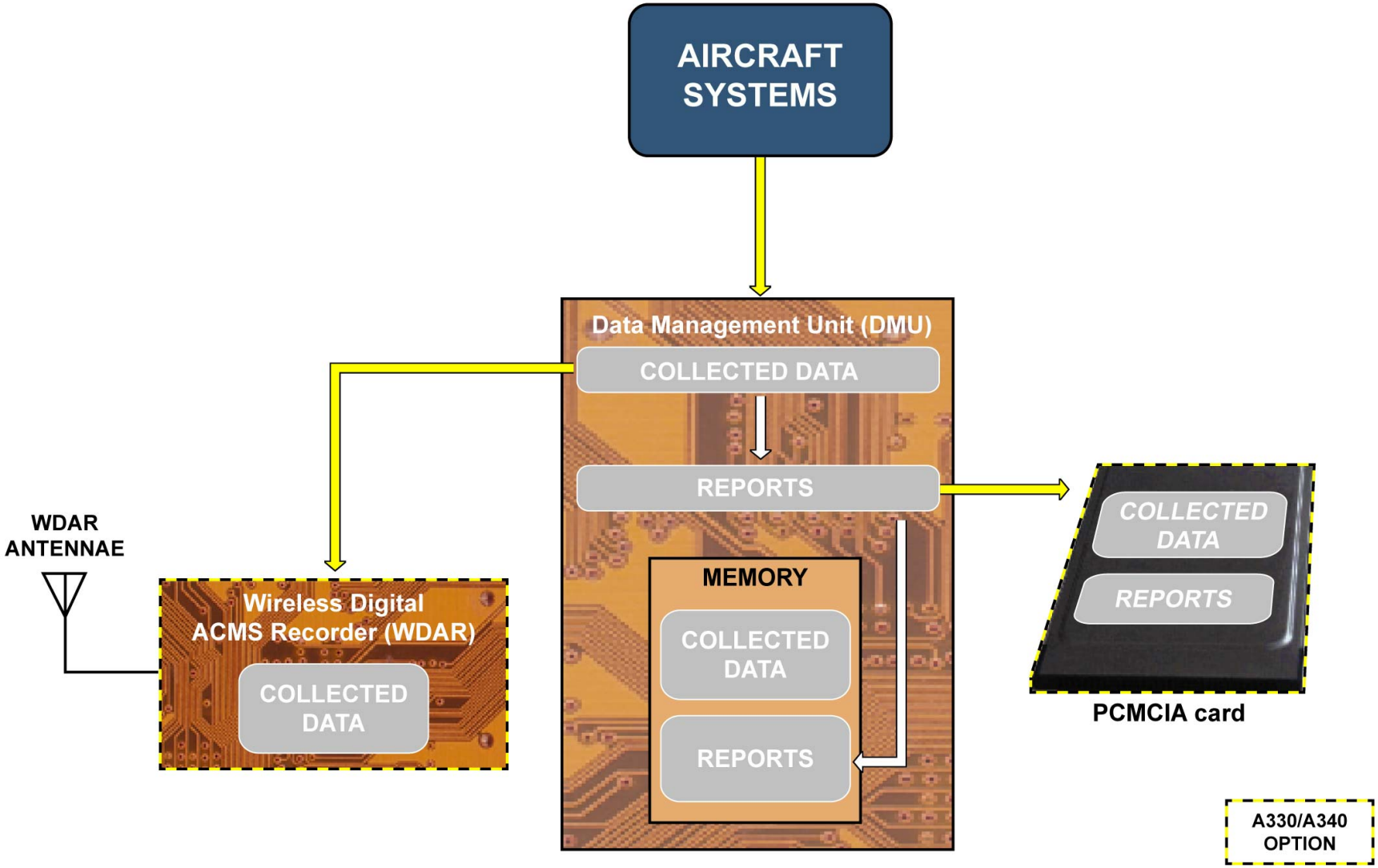

DMU

G7508471 - G3NT1T0 - FM31DG000000001

ACMS GENERAL DESCRIPTION (3)

SMART ACMS RECORDER (SAR)

The SAR is a DMU function. This function can make the recording of compressed data, programmable through the GSE. SAR data can be stored in the internal DMU memory, or on the PCMCIA card.

G7508471 - G3NT1T0 - FM31DG000000001

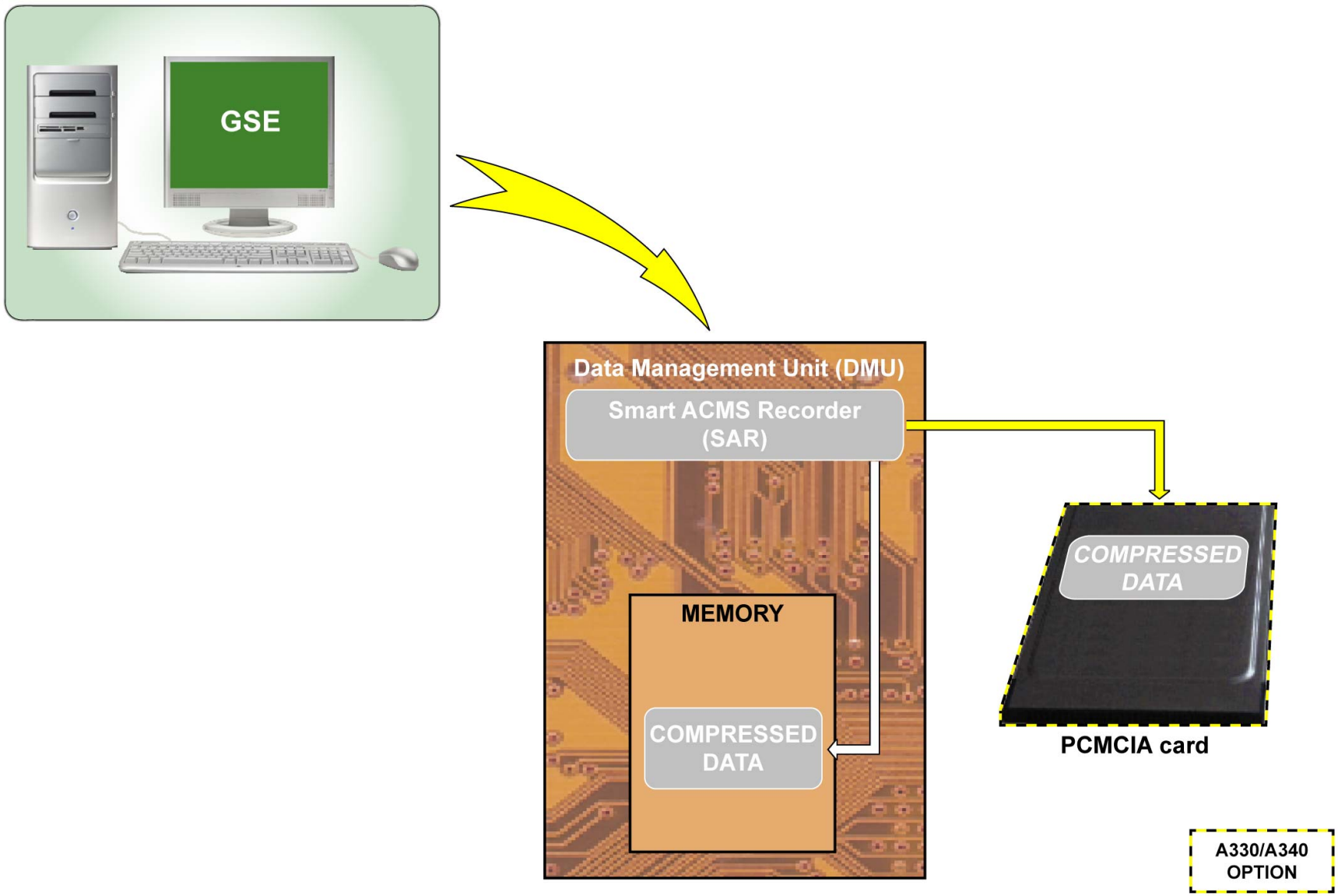

SMART ACMS RECORDER (SAR)

G7508471 - G3NT1T0 - FM31DG000000001

ACMS GENERAL DESCRIPTION (3)

WIRELESS DIGITAL ACMS RECORDER (WDAR)

The purpose of the WDAR is to record data for on ground performance, maintenance or condition monitoring tasks. The wireless transmission mode of the WDAR (if installed) initiates only when the A/C is on the ground, via a cellular service provider (i.e: Global System for Mobile Communication). The WDAR detects the A/C on the ground if the RH L/G is compressed and a door is locked. Preprogrammed selection of data can be done through the GSE. DAR data can also be stored on a specific PCMCIA card in the WDAR or on the PCMCIA card of the DMU.

G7508471 - G3NT1T0 - FM31DG000000001

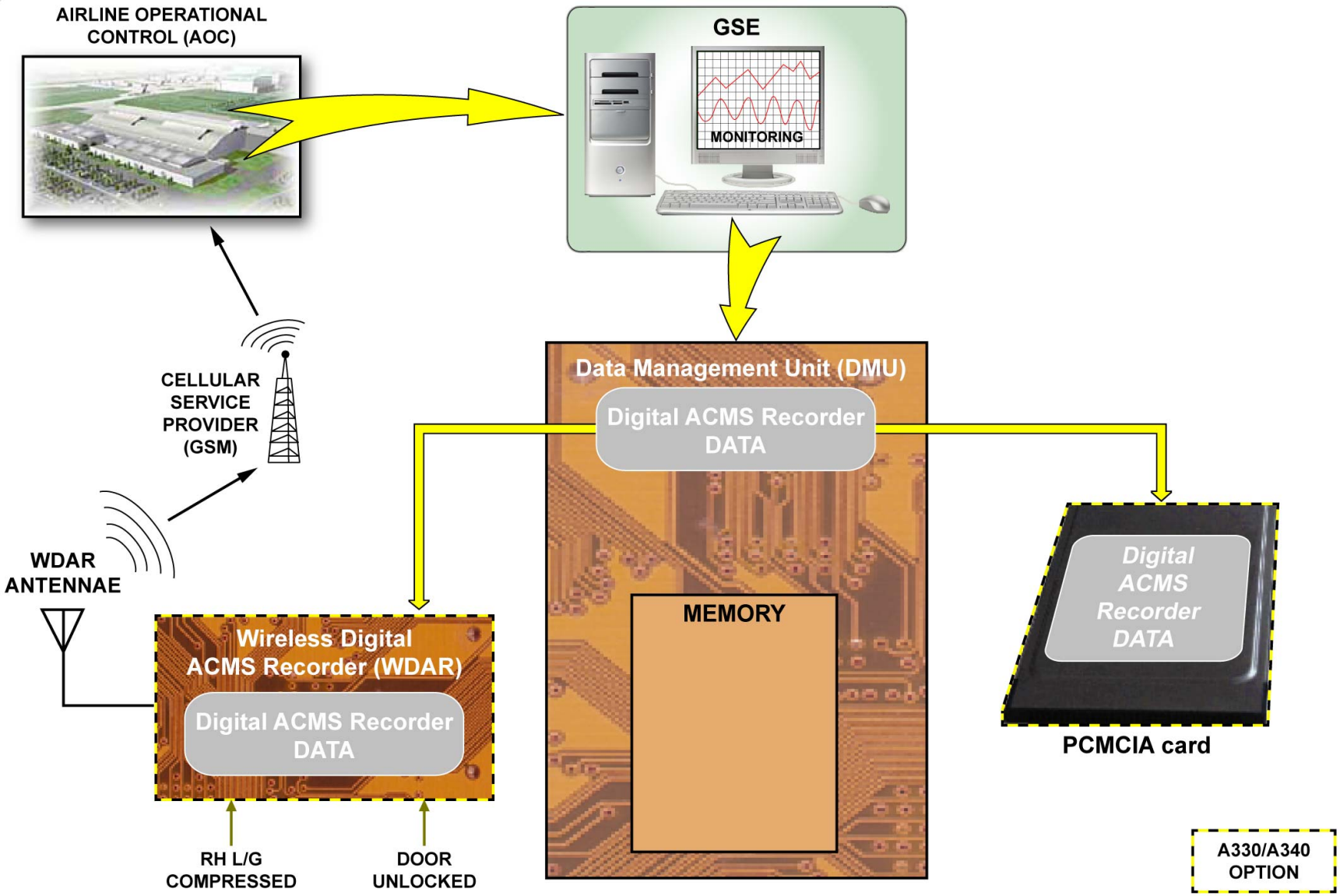

WIRELESS DIGITAL ACMS RECORDER (WDAR)

G7508471 - G3NT1T0 - FM31DG000000001

ACMS GENERAL DESCRIPTION (3)

FDIU

The Flight Data Interface Unit (FDIU) part of the FDIMU sends the same parameters as the Digital Flight Data Recorder (DFDR) to the DMU. These parameters can be recorded on the PCMCIA card.

G7508471 - G3NT1T0 - FM31DG000000001

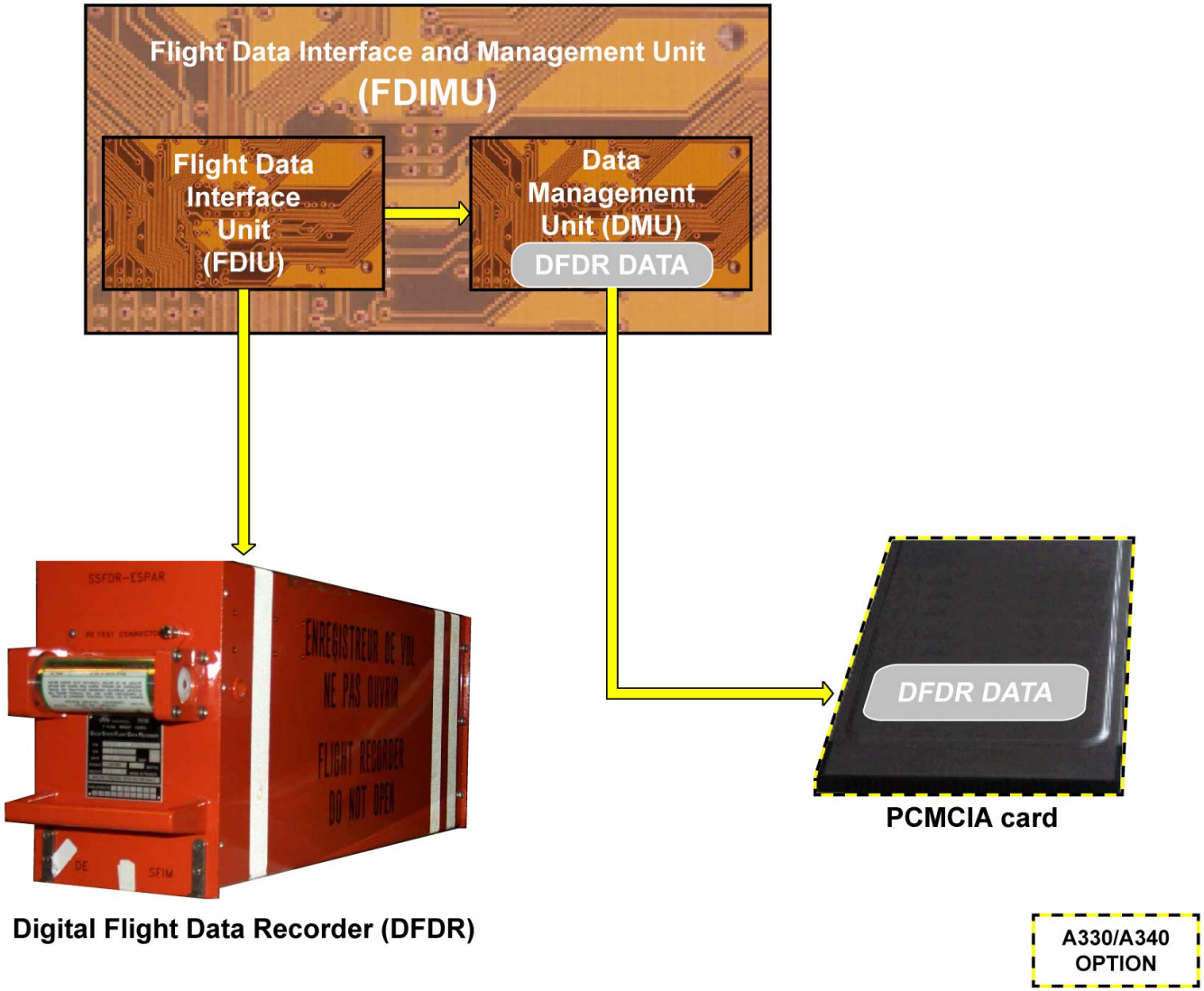
Flight Data Interface and Management Unit
(FDIMU)
Flight Data Interface Unit (FDIU)
Data Management Unit (DMU)
DFDR DATA
SSFDR-ESPAR
ENREGISTREUR DE VOL
NE PAS OUVRIR
FLIGHT RECORDER
DO NOT OPEN
DFDR DATA
PCMCIA card
Digital Flight Data Recorder (DFDR)
A330/A340
OPTION

FDIU

ACMS GENERAL DESCRIPTION (3)

PCMCIA INTERFACE

The PCMCIA interface accepts high capacity and removable PCMCIA card. ACMS reports, SAR data, DFDR data and DAR data are stored on the PCMCIA card. The disk space ratio is programmable by the GSE. The PCMCIA interface can also be used as a portable data loader to upload FDIMU software and database, or to download recorded data.

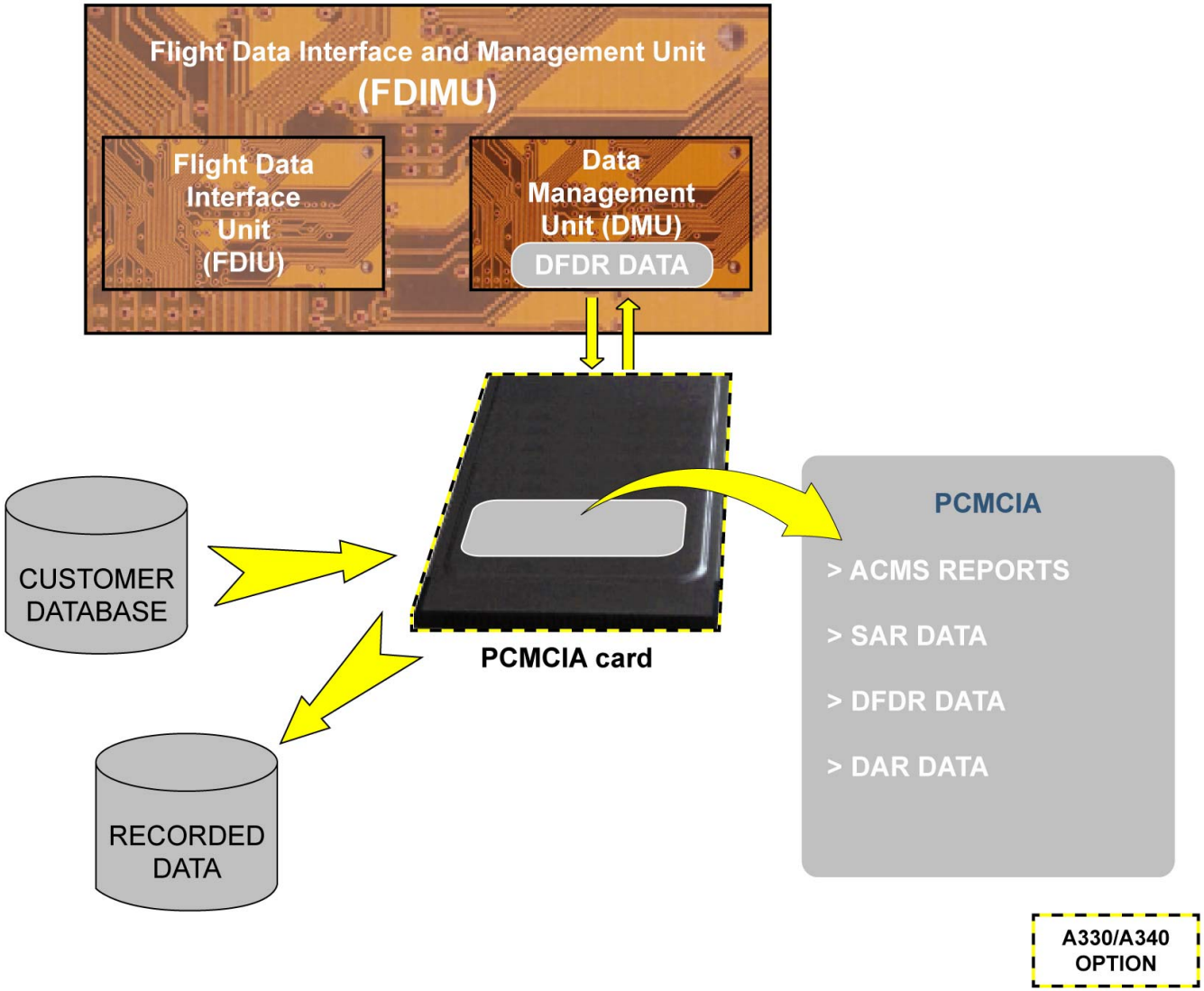

PCMCIA INTERFACE

ACMS GENERAL DESCRIPTION (3)

GSE

The GSE is based on a compatible personal computer able to read 3.5 inch floppy disks and/or PCMCIA cards. The GSE software supplies the following main functions:
- reconfiguration function,
- and readout function.

The reconfiguration function is used for the configuration of the customer database (trigger conditions, layout of recording space...). The readout function is used for display, print out and analysis of recorded data.

G7508471 - G3NT1T0 - FM31DG000000001

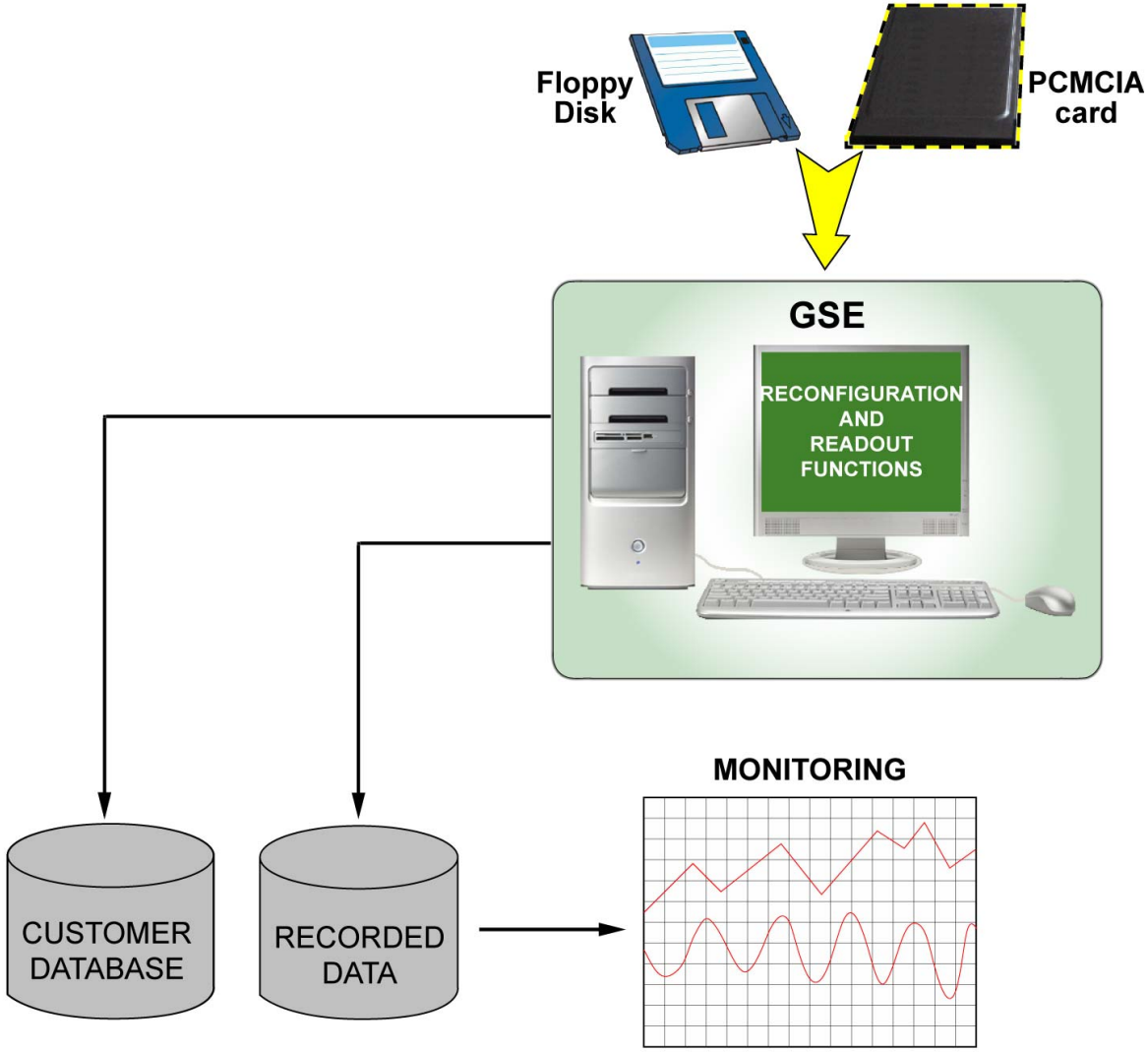

A330/A340 OPTION

GSE

G7508471 - G3NT1T0 - FM31DG00000001

ACMS GENERAL DESCRIPTION (3)

MDDU

The Multipurpose Disk Drive Unit (MDDU) is used with a 3.5 inch floppy disk to:
- upload data into the FDIMU (operational software, customer database),
- download data for GSE analysis (reports, SAR data).

G7508471 - G3NT1T0 - FM31DG000000001

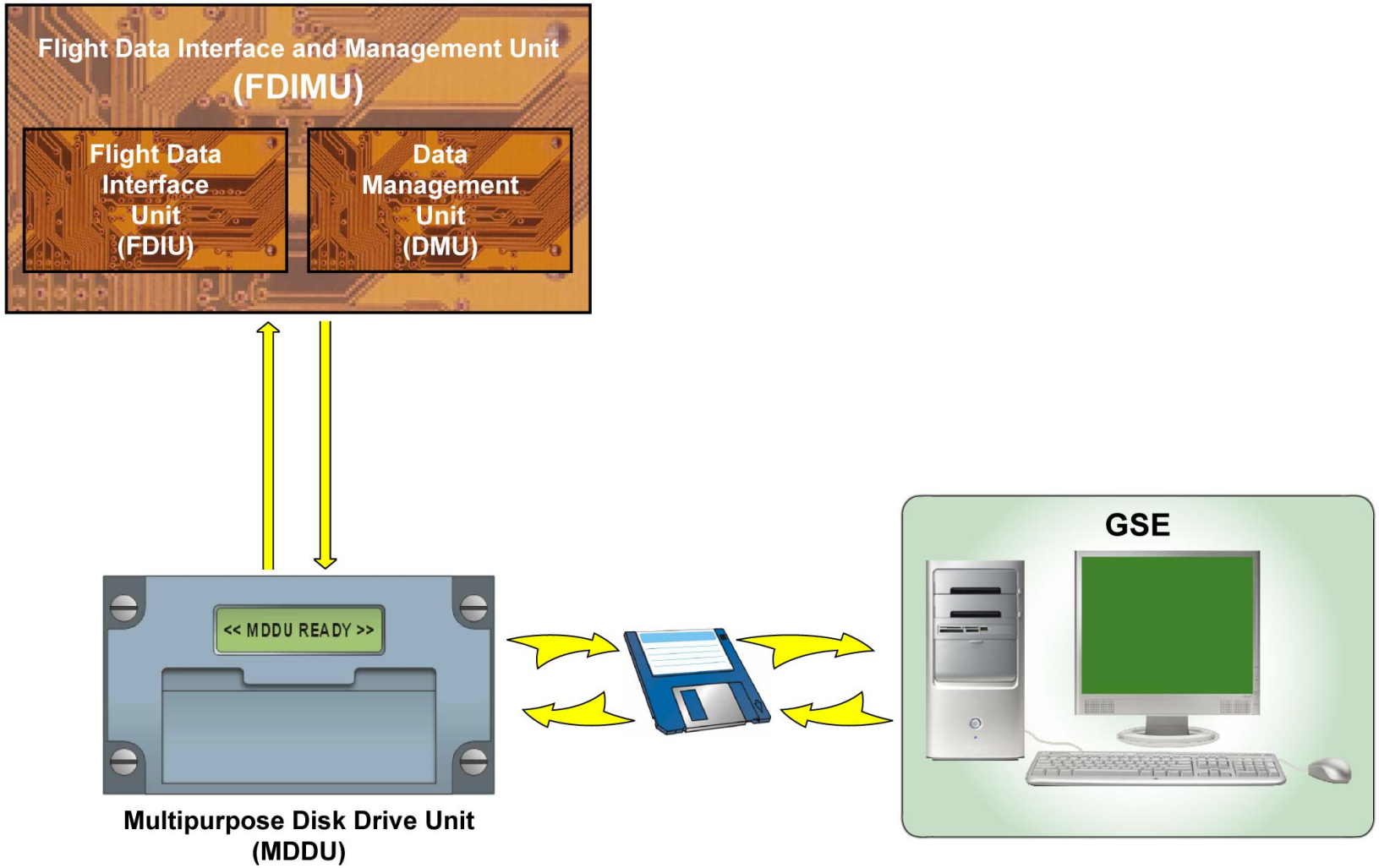

MDDU

G7508471 - G3NT1T0 - FM31DG000000001

ACMS GENERAL DESCRIPTION (3)

MCDU

The MCDUs 2 and 3 are connected to the FDIMU to display data, program and also control the system. Compared to the GSE, the programming facilities offered by the MCDU are very limited. The main functions of the MCDU within the ACMS are:
- online display of selected parameters,
- display of the list of the stored reports and Smart ACMS Recorder files,
- manual request of reports and SAR / DAR recording.

G7508471 - G3NT1T0 - FM31DG000000001

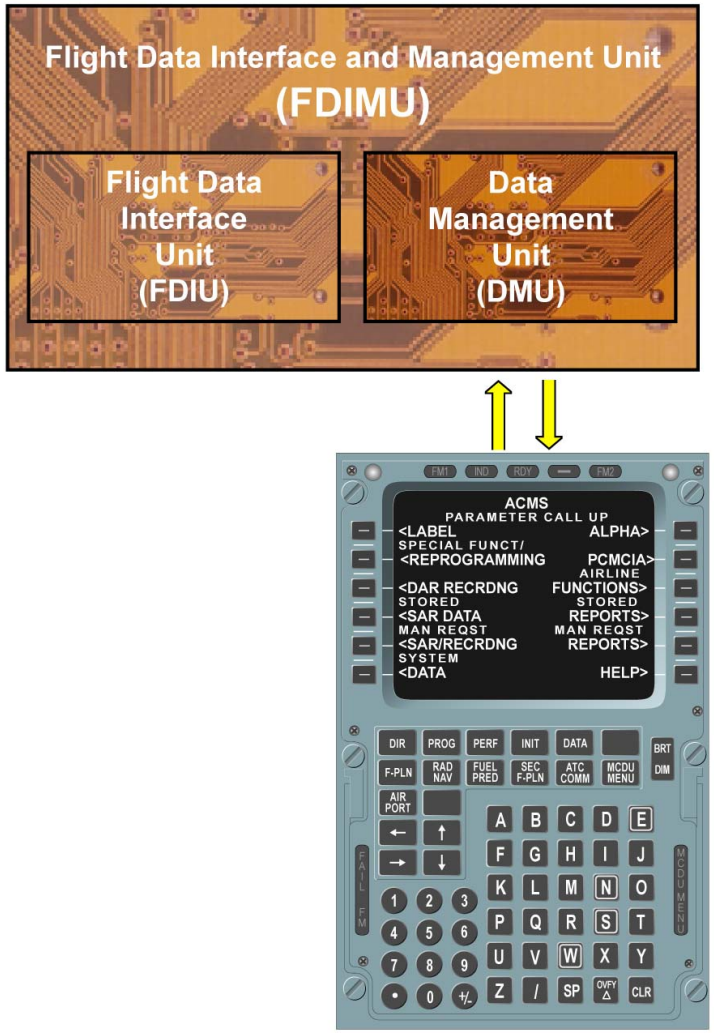

MAIN FUNCTIONS OF MCDU ACMS MENU:

- ✓ PARAMETERS DISPLAY,
- ✓ STORED DATA LISTING,
- ✓ MANUAL REQUESTS.

MCDU

ACMS GENERAL DESCRIPTION (3)

PRINTER

The printer is used to print reports generated by the DMU as well as most of the ACMS MCDU displays. The printer can be automatically controlled by the DMU, manually controlled from the MCDU or activated using the ACMS PRINT P/B.

G7508471 - G3NT1T0 - FM31DG00000001

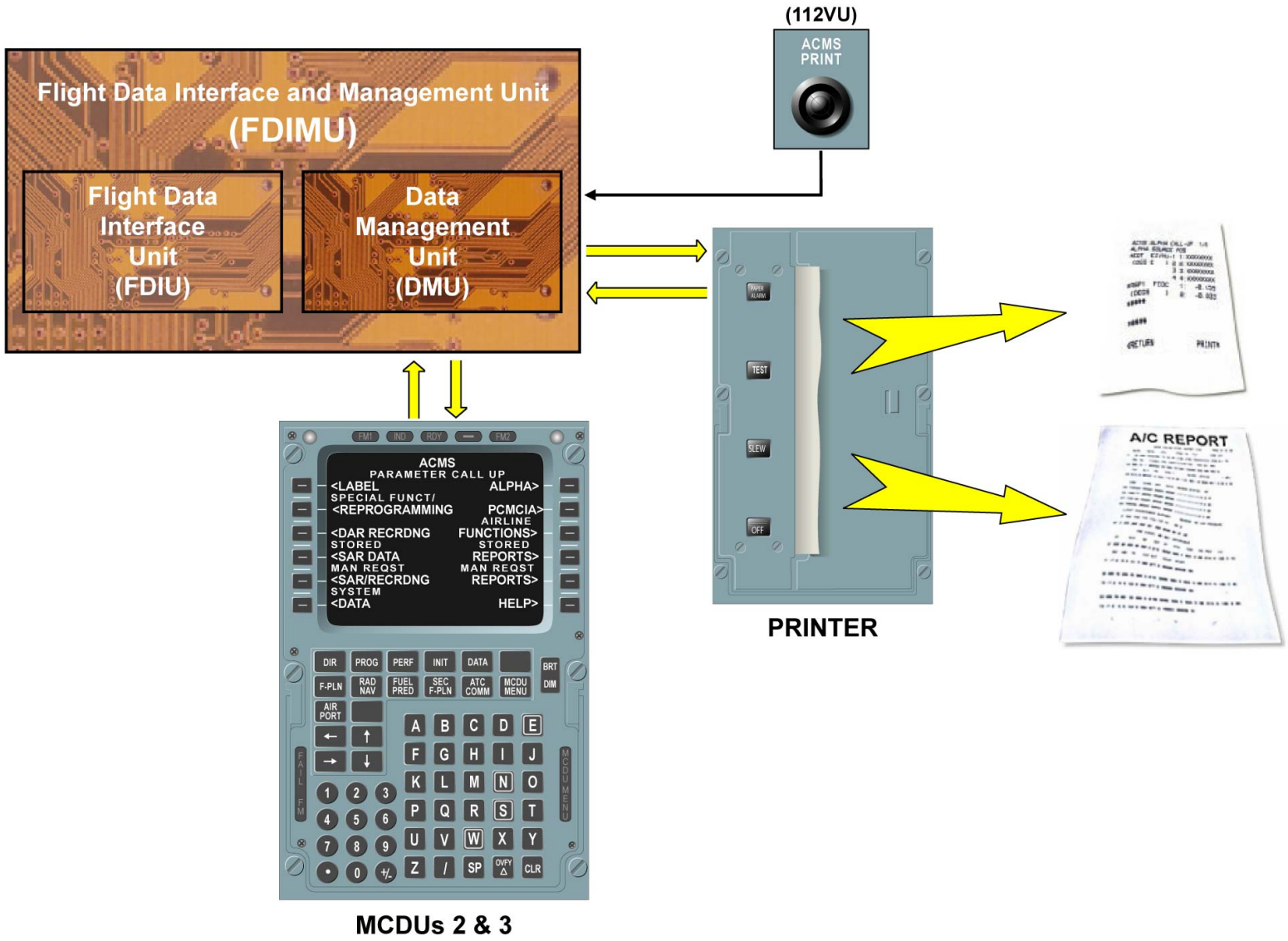
(112VU)
ACMS PRINT
Flight Data Interface and Management Unit
(FDIMU)
Flight Data Interface Unit (FDIU)
Data Management Unit (DMU)
PAPER ALARM
TEST
SLEW
OFF
PRINTER
A/C REPORT
ACMS
PARAMETER CALL UP
<LABEL
ALPHA>
SPECIAL FUNCT/
<REPROGRAMMING
PCMCIA>
AIRLINE
<DAR RECRDNG
FUNCTIONS>
STORED
STORED
<SAR DATA
REPORTS>
MAN REQST
MAN REQST
<SAR/RECRDNG
REPORTS>
SYSTEM
<DATA
HELP>
MCDUs 2 & 3

PRINTER

ACMS GENERAL DESCRIPTION (3)

ATSU

The Air Traffic Service Unit (ATSU) can be used to send reports and to broadcast parameters generated by the FDIMU to a ground station via radio transmission. The download of reports can be automatically initiated by the DMU, or manually initiated from the MCDU. The ATSU can also receive and send to the FDIMU, requests from the ground.

G7508471 - G3NT1T0 - FM31DG000000001

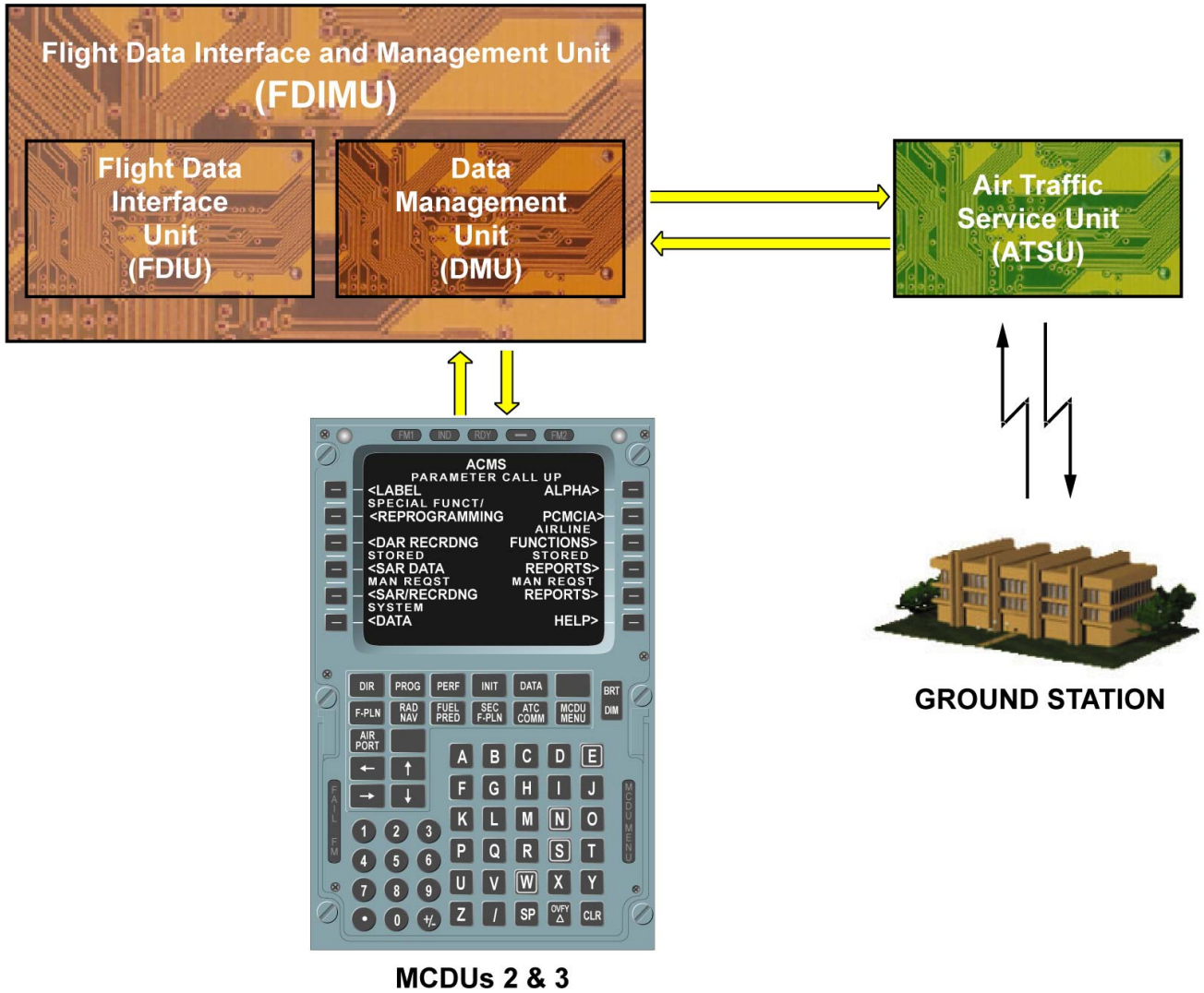
Flight Data Interface and Management Unit
(FDIMU)
Flight Data Interface Unit (FDIU)
Data Management Unit (DMU)
Air Traffic Service Unit (ATSU)
ACMS
PARAMETER CALL UP
<LABEL
ALPHA>
SPECIAL FUNCT/
<REPROGRAMMING
PCMCIA>
AIRLINE
<DAR RECRDNG
FUNCTIONS>
STORED
STORED
<SAR DATA
REPORTS>
MAN REQST
MAN REQST
<SAR/RECRDNG
REPORTS>
SYSTEM
<DATA
HELP>
GROUND STATION
MCDUs 2 & 3

ATSU

ACMS D/O (3)

FDIMU

The Flight Data Interface Management System is controlled by the Flight Data Interface Management Unit (FDIMU). The FDIMU integrates the former Flight Data Interface Unit (FDIU) (Digital Flight Data Recording System (DFDRS) function) and Digital Management Unit (DMU) (Aircraft Condition Monitoring System (ACMS) function) with PCMCIA interface into a single LRU. These two functions operate independently from each other. The FDIU section is dedicated to the flight data recording system for incident/accident investigation. The DMU section is used to monitor aircraft systems condition, mainly engines and APU systems, as well as aircraft performance in order to schedule maintenance tasks, operation recommendations to be formulated, and trouble shooting assistance. In addition, for PCMCIA recording purposes, data transmission from the FDIU part to the DMU part is given through an internal ARINC 429 data bus.

DMU

The DMU part is the heart of the ACMS. The main function of the DMU part is to generate reports or/and to record raw data from aircraft system data collected and continuously monitored by the DMU. The data is received from aircraft systems via low speed (12Mbts/sec) or high-speed (100Mbts/sec) ARINC 429 data buses and discrete inputs. This data is stored into buffer memories and retrieved to provide, if required, pre-event data for report generation and/or raw data recording.
In addition to the data recording, specific trigger conditions are programmed in the DMU, using a Ground Support Equipment (GSE). When a preprogrammed trigger condition is detected by DMU monitoring, the DMU part software generates automatically preformatted ACMS reports or/and records automatically raw data surrounding this specific event. The DMU stores these reports on its internal non-volatile Solid State Mass Memory (SSMM). The reports can also be stored on the PCMCIA memory card if installed. The DMU stores the sets of raw data on an external optional Wireless Digital ACMS Recorder (WDAR) or/and compresses and stores this data on its memory (Smart ACMS Recorder function). The Smart ACMS Recorder (SAR) and WDAR data can also be recorded on the PCMCIA memory card, if installed. The DMU has a BITE function that reports the ACMS status to the CMS. Note that the ACMS function is very flexible and allows, through the GSE, to customize or create triggering conditions, reports and sets of raw data as well as make partitioning of the DMU's SSMM between reports, SAR data and buffers.

REPORTS

The DMU part generates a set of preprogrammed ACMS reports functional at A/C, called Airbus Standard Reports. These ACMS reports are defined and validated by Airbus for:
- aircraft performance monitoring,
- engine monitoring,
- APU monitoring,
- miscellaneous monitoring functions related to structure, RAT, ECS and door monitoring,
- Trouble-shooting and in-depth investigation.

If needed, 3 additional reports called "free programmable reports" may be customized. A report includes a fixed and comprehensive set of data collected under predefined triggering logic and call-up through call-up codes. The ACMS reports may also be triggered either by a manual request via the ACMS remote Print button, or via an ATSU up-link request. Finally the ACMS reports can be:
- printed out on the cockpit printer in flight or on ground,
- collected and retrieved via the PCMCIA memory card,
- downloaded on ground only from the ACMS memory via the MDDU or via the PCMCIA interface card,
- down linked through ACARS function (ATSU) in flight or on ground.

SAR FUNCTION

The SAR function supplies compressed recordings of a predefined set of raw data related to particular flight events. This data set is stored in the DMU part SSMM and, if programmed, in the PCMCIA card as well. The SAR recording can be triggered:
- automatically when programmable triggers are met,
- manually via the MCDU.

The memory of the DMU is dedicated to the SAR. It is split into separate channels (up to 8) with different sizes used to store the SAR files. Each channel can have up to 32 programmable start/stop triggering conditions running simultaneously and fully customized. When a triggering condition is met, a new SAR file is opened and is used to store the corresponding predefined compressed data. In addition, each channel can be programmed to record pre-event data for extended trouble shooting. SAR data is not directly accessible on-board. SAR data files are dumped on ground only via the MDDU or via the PCMCIA interface, either automatically or manually. Data is then converted into graphs or lists using the READOUT function of the GSE. The only information available on-board the aircraft is related to SAR file characteristics displayed on the MCDU. The Airbus standard default SAR programming has no channels defined or automatic triggers programmed. The user must initiate all programs.

WDAR FUNCTION

The optional Wireless Digital ACMS Recorder (WDAR) records the raw data sent by the DMU part on frames like the DFDR. WDAR recording activation can be:
- automatic by pre-programmed logical aircraft event triggers (up to 64 GSE programmed triggers available),
- manual through the MCDU,
- continuous during the entire flight,
- continuous or intermittent during a specific flight phase.

The WDAR memory report is then read out by a specific WDAR Analysis Ground Station (AGS) and used for long-term trend monitoring and short-term trouble shooting. The WDAR recording speed can be set from 64 word/second up to 1024 word/second by using GSE. The Airbus standard default WDAR programming has a pre-defined 64-word/second-frame format but with no automatic triggers defined. The WDAR includes a BITE function, which reports the status to the DMU. The PCMCIA interface, if installed, can be used to store the same data as the WDAR.
The wireless transmission mode of the WDAR (if installed) initiates only when the A/C is on the ground, via a cellular service provider (i.e: Global System for Mobile Communication). The automatic transmission is allowed thank to additional discrete signals (ground condition, one door open).

PCMCIA BOARD AND INTERFACE

The PCMCIA board supplies an interface in order to:
- store ACMS reports as well as WDAR and SAR data independently from the recording done in the DMU and in the WDAR.
- store DFDRS control flight parameters independently from the recording done in the Quick Access Recorder (QAR).
- upload ACMS system software and ACMS setup database.
- download ACMS reports and raw data (Smart ACMS Recorder).

The PCMCIA board is managed by the DMU processor and is accessible through an access door on the FDIMU front face. The PCMCIA board accepts removable PCMCIA cards that can provide up to 256 Mbytes of Memory used for inputs/outputs for file transfer oriented devices. These cards are not delivered with the FDIMU box.

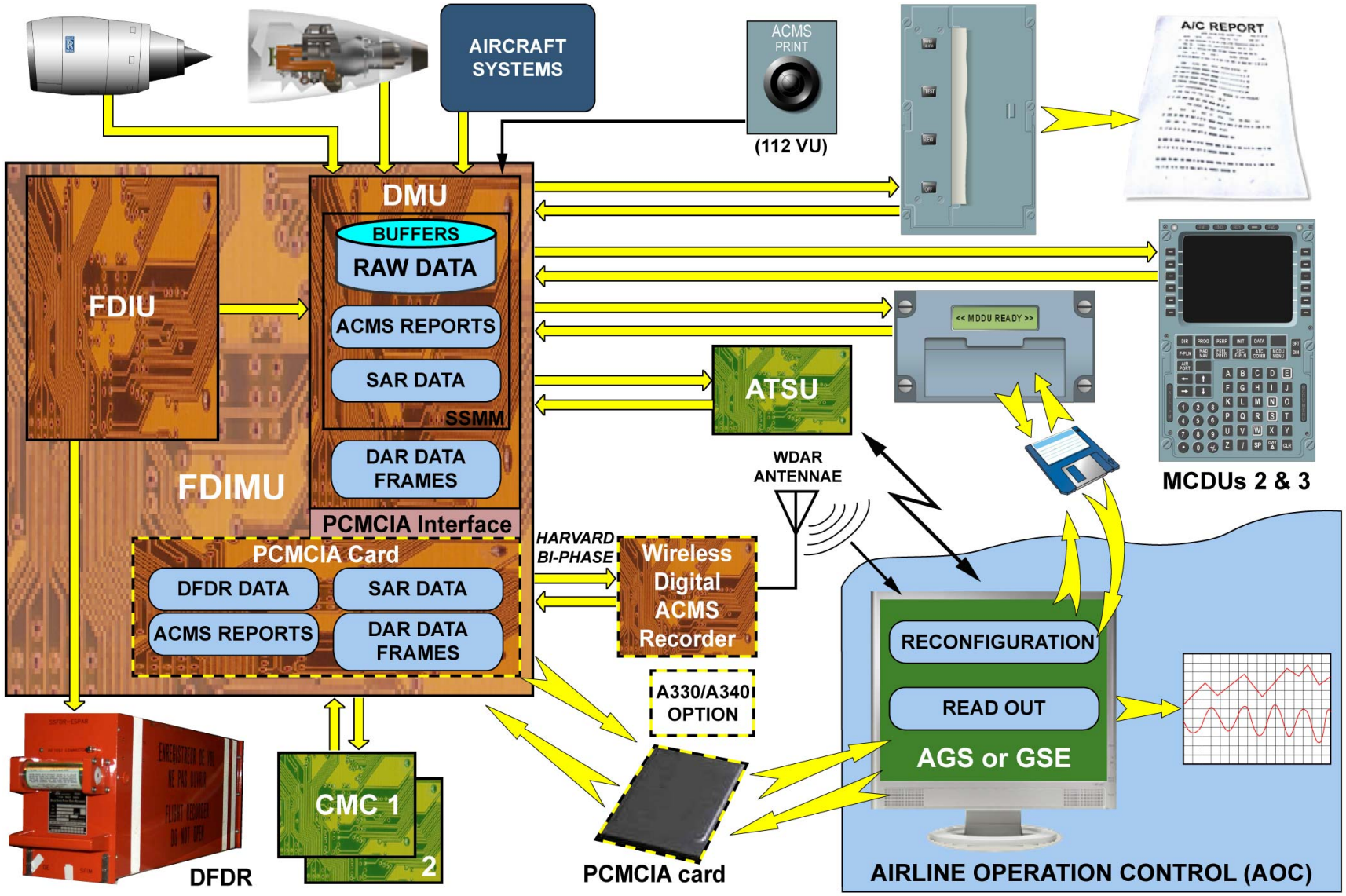

FDIMU ... PCMCIA BOARD AND INTERFACE

G7508471 - G3NT1T0 - FM31D6ACMSDO002

This Page Intentionally Left Blank

G7508471 - G3NT1T0 - FM31D6ACMSDO002

ACMS D/O (3)

MCDU MAIN ACMS MENU

The operator has the ability to display any FDIMU aircraft digital data via MCDU 2 and 3 by selecting the ACMS menu page. Most ACMS pages are shown in this module.

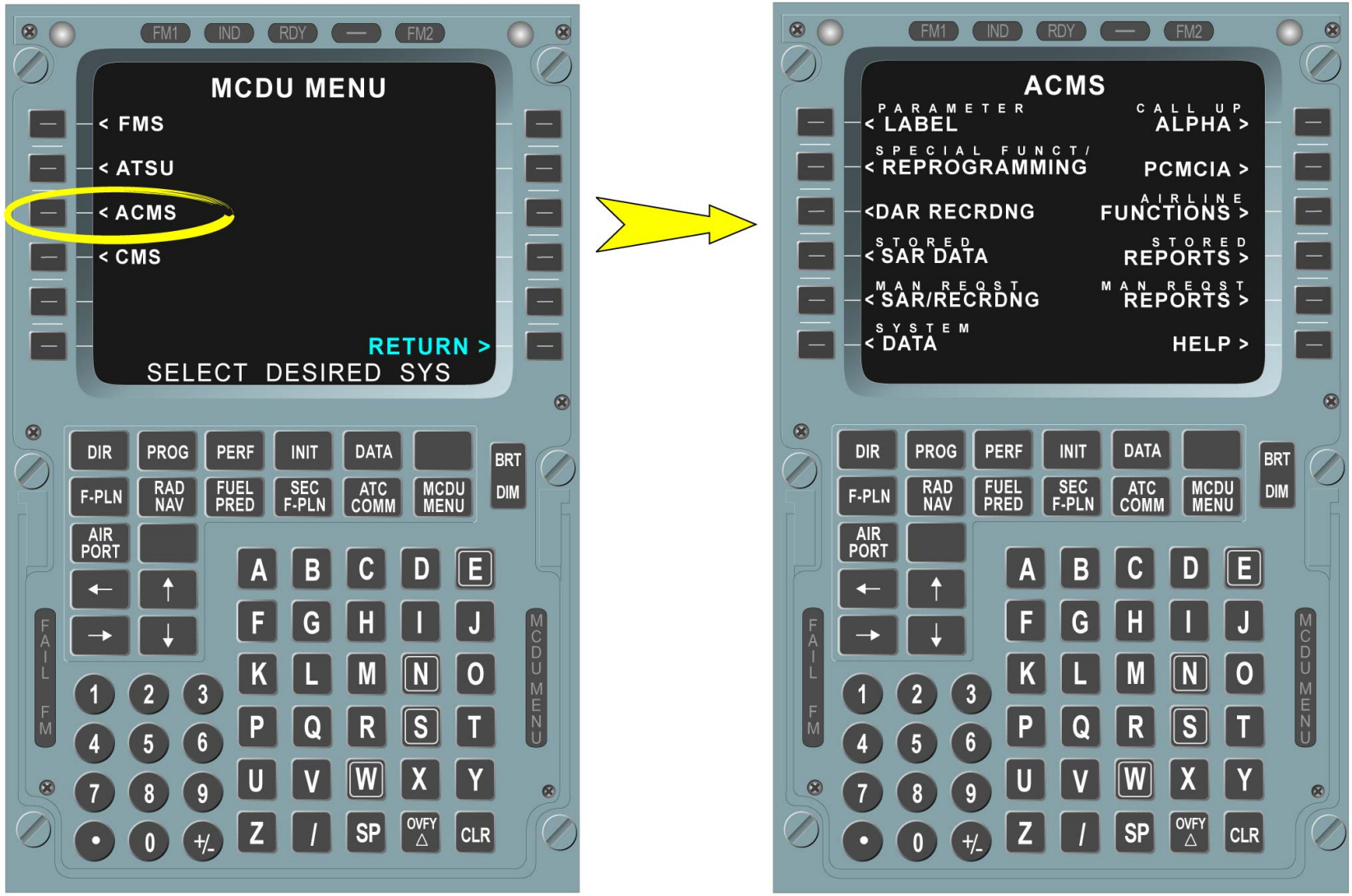

MCDU MAIN ACMS MENU

G7508471 - G3NT1T0 - FM31D6ACMSDO002

ACMS D/O (3)

PARAMETER ALPHA

For the 300 parameters, which have an alphanumeric code, the selection is possible by the alpha call-up function. This page displays alpha call-ups and the definition of alpha call-up sets, which can be recalled at a later date. The ALPHA MENU DISPLAY key displays 8 pages with up to 5 alpha call-ups per page. The display read out is directly given in engineering units. The alpha call-up is identified in the form of alphanumeric codes, for example EGT (max. 4 digits). To get information about a given system it is possible to extend the alpha call-up code by the system number, for example, EGT 1.
The alpha code is displayed on the MCDU with the data source and the parameter values in real time and refreshed once per second. A dash symbol indicates that the data is not being updated; a series of crosses indicates that the parameter is invalid. The ALPHA MENU CLEAR key is used to clear the current alpha call-up entries. The ALPHA LIST key provides the list of the available alpha call-ups. If a letter is specified, the list will display only alpha call-ups starting with this letter.
The SETUP NAME key is used to define the name for a set of alpha call-ups. Up to 8 sets of 40 alpha call-ups are possible. Storing or deleting of call-ups is available. The bottom of the screen shows the name of the 8 sets stored, so they are easily recalled in a future MCDU session.
The PRINT RECORD START key prints out the alpha calls-up in time series of 1-second intervals. Previously the recording time in seconds (up to 30), must be entered.

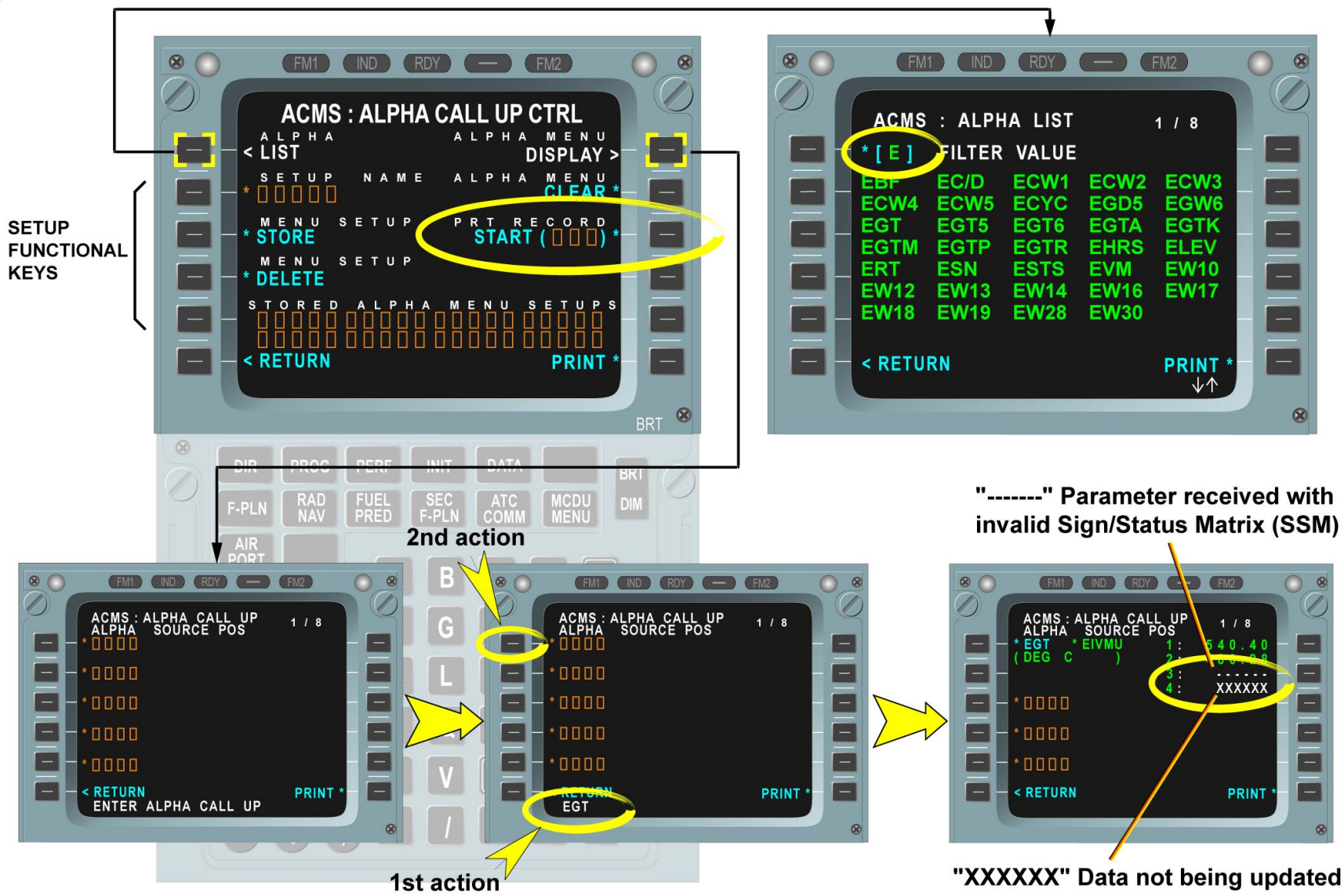

PARAMETER ALPHA

G7508471 - G3NT1T0 - FM31D6ACMSDO002

ACMS D/O (3)

PARAMETER LABEL

The FDIMU (DMU part) permits direct access to all parameters transmitted on the ARINC 429 data buses connected to the DMU function for on line display. The ACMS LABEL CALL-UP Control page enables the access to the display of label call-ups and the definition of label call-up sets. The LABEL MENU DISPLAY function enables the display of 8 pages with up to 2 label call-up parameters per page. The display read out is in binary form. The Label call-up selection is made by entering the Equipment Identification (EQ) system number, Label, and the Source/Destination Identifier (SDI) values. Each parameter is separated by a slash.
As an example EGT value:
The EGT value is given in real time and refreshed once per second. The line below the ARINC parameter characteristics contains the label (345), the SDI (01), and the decimal value (516) of the selected data bits. In the next data lines the SSM bits and the binary data field of the selected parameters are displayed. In the example, only 12 bits of the data field are significant (bit 28 to bit 17). The LABEL PORT LIST key displays a list of DMU input ports with the connected computers and the equipment/system identifications. The SETUP NAME key is used to define the name of a set, up to 8 sets of 16 label call-ups is possible. The Storing or the deleting of label call-ups remain available. The bottom of the screen shows the name of the 8 sets stored, they are easily recalled in a future MCDU session. The PRINT RECORD START key prints out the label calls-up in time series of 1 second intervals. Previously the recording time in seconds (up to 30) must be entered.

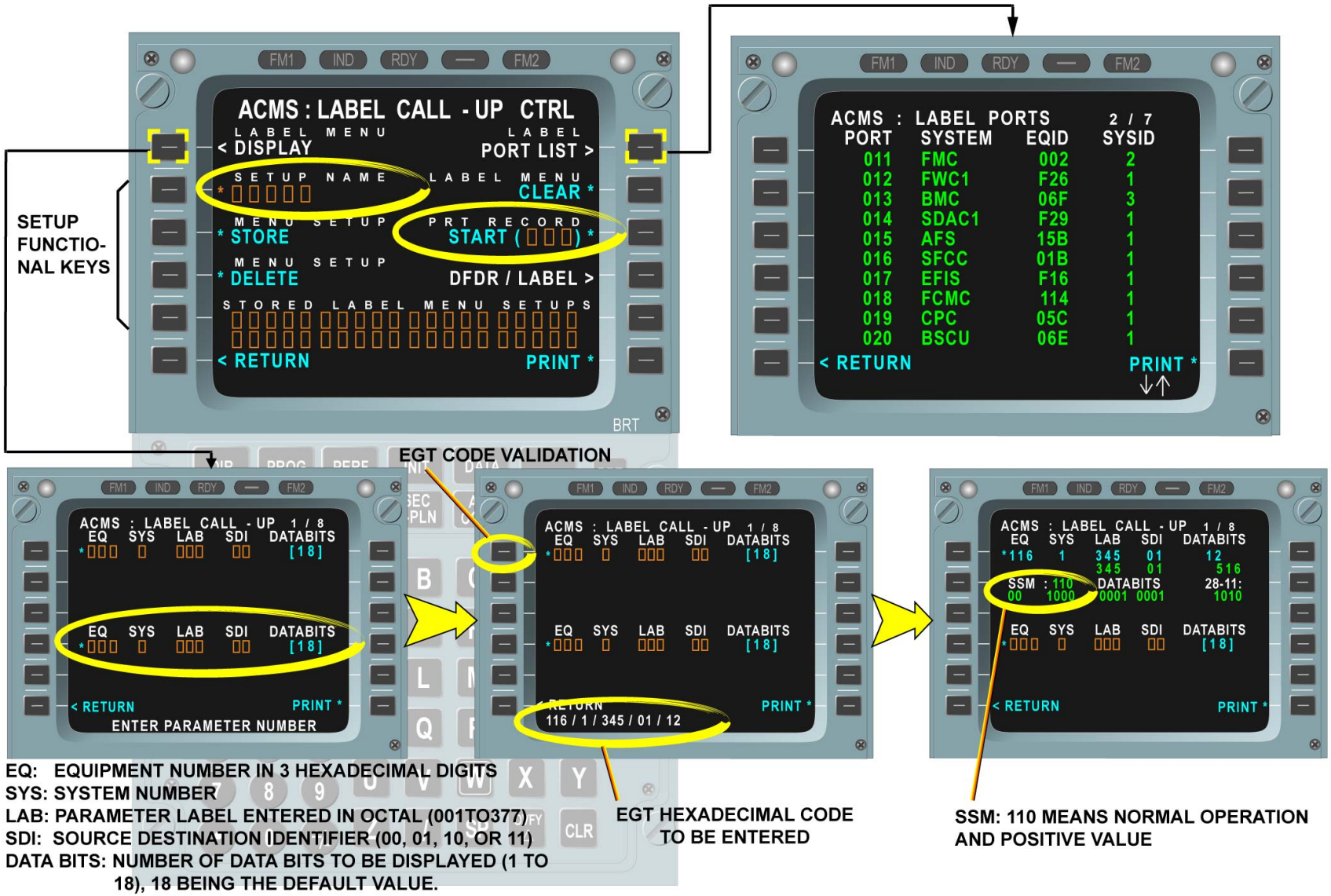

PARAMETER LABEL

G7508471 - G3NT1T0 - FM31D6ACMSDO002

ACMS D/O (3)

REPROGRAMMING

The ACMS is capable of reprogramming. The decision for reprogramming is done at the engineering level, and requires a password for access. The reprogramming of the ACMS is done, either by the GSE software tool for a full reprogramming or by using the MCDU for a very limited reprogramming. The MCDU reprogramming function enables report inhibition, report constants reprogramming, report logic and statistical counters reset. The REPORT INHIBIT key is used for the inhibition of all automatic triggers for a selected report. This inhibition will not disable the generation of the ACMS reports via the MCDU Manual Report Request function. The REPORT RESET key is used to reset the trigger logic and counters associated with specific ACMS reports. The PROGRAM REPORT CONSTANTS menu modifies constants within the ACMS reports. Constants are listed individually for each report. The DOCUMENTARY DATA menu provides some ACMS identification and essential configuration information. The STATISTIC COUNTERS menu allows the display and reprogramming of engine flight hours and engine cycles counters for each engine. The FDIMU/DMU part will reset engine hours and cycles for a particular engine position when the DMU recognizes a change in engine serial number. This menu lets the line maintenance personnel program the correct value for engine flight hours after an engine has been changed. In order to authorize the arming triggers associated with a RAT TEST report, a correct password has to be entered in the ACMS: SPECIAL FUNCtion/REPROGramming menu page. Note that the RAT test is not triggered by the FDIMU/DMU part.

REPROGRAMMING

G7508471 - G3NT1T0 - FM31D6ACMSDO002

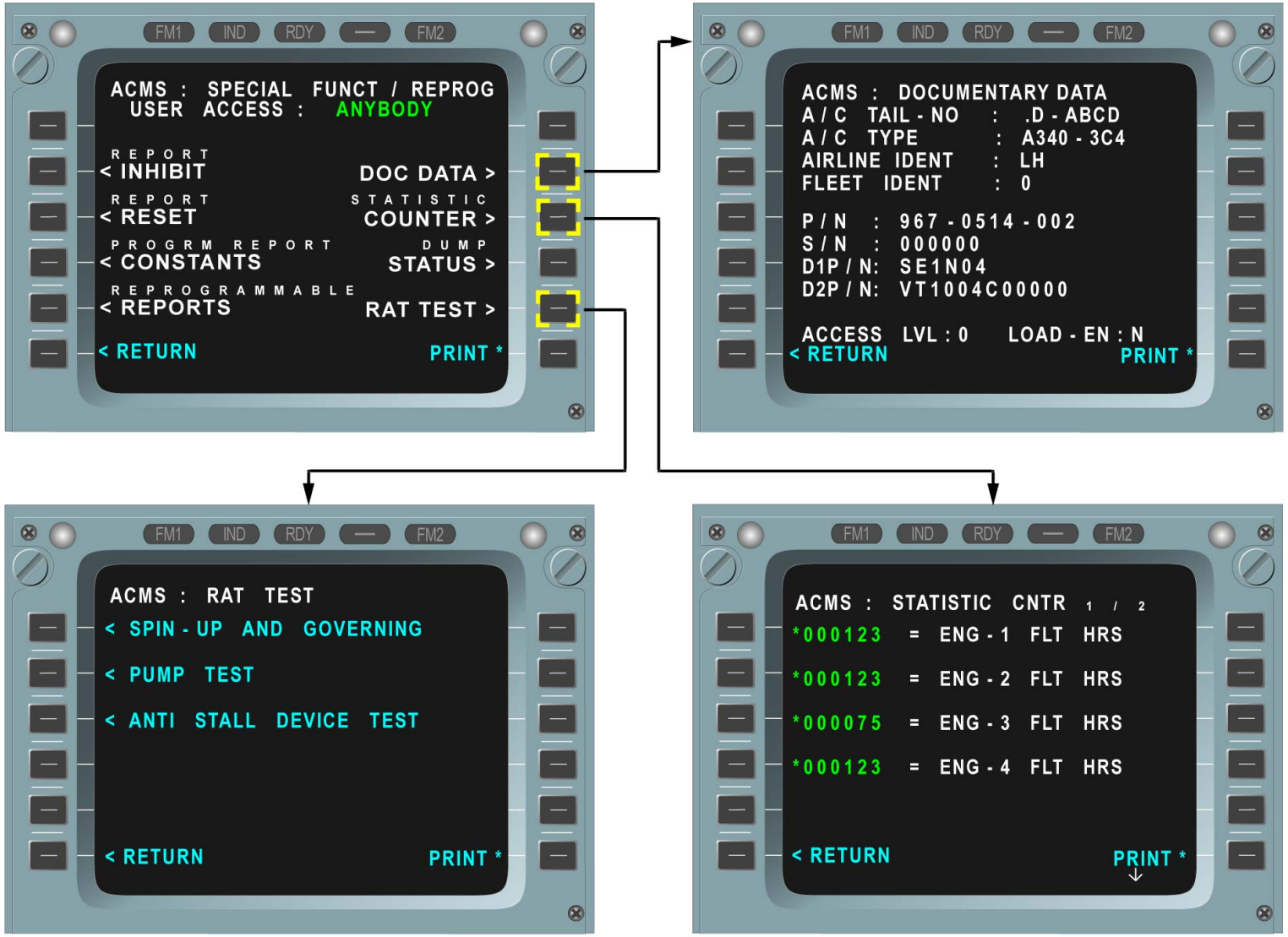

REPROGRAMMING

G7508471 - G3NT1T0 - FM31D6ACMSDO002

This Page Intentionally Left Blank

G7508471 - G3NT1T0 - FM31D6ACMSDO002

ACMS D/O (3)

PCMCIA

This function enables the PCMCIA board management and displays. It gives information related to the WDAR, QAR, ACMS REPORTS or Smart ACMS Recorder data recorded on the PCMCIA board by the DMU initially programmed from the GSE. If the PCMCIA is not programmed only WDAR data is recorded on PCMCIA board.
The ACMS PCMCIA IDENTIFICATION menu displays the part number, serial number, maintenance word status and the total free capacity of the PCMCIA. The ACMS PCMCIA DIRECTORY menu displays the structure of the directory and includes sub-directories and files. It is possible to switch to a sub-directory and to switch into a file. A file can be switched between hexadecimal and ASCII representations of the content. The ACMS PCMCIA RECORDING menu shall display the different recording partitions. It will display information such as record status, file name, and length of a record. Additionally, the total and the free capacity of the partition are displayed.

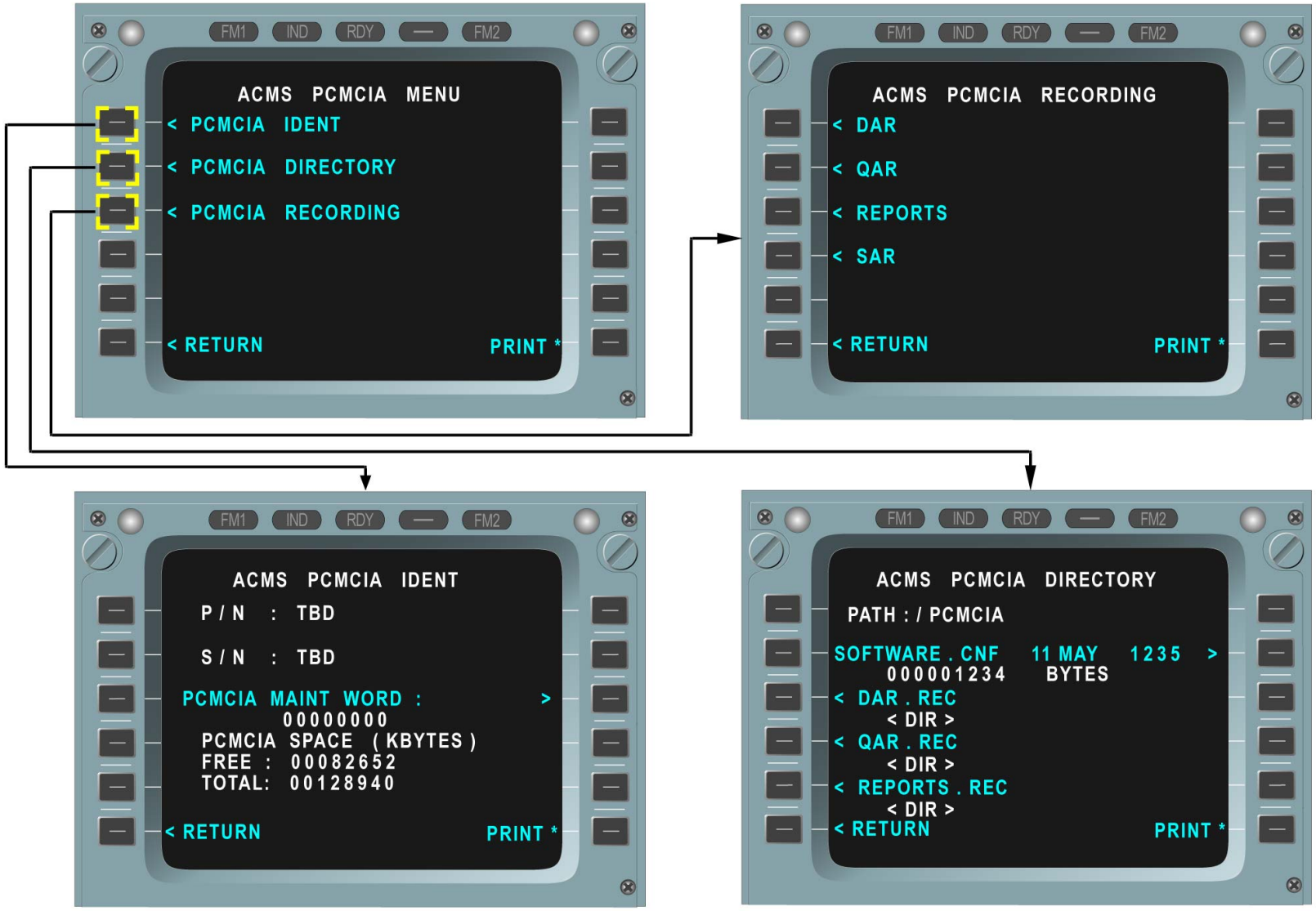
FM1 IND RDY FM2
ACMS PCMCIA MENU
< PCMCIA IDENT
< PCMCIA DIRECTORY
< PCMCIA RECORDING
< RETURN
PRINT *
FM1 IND RDY FM2
ACMS PCMCIA RECORDING
< DAR
< QAR
< REPORTS
< SAR
< RETURN
PRINT *
FM1 IND RDY FM2
ACMS PCMCIA IDENT
P / N : TBD
S / N : TBD
PCMCIA MAINT WORD : >
00000000
PCMCIA SPACE (KBYTES)
FREE : 00082652
TOTAL: 00128940
< RETURN
PRINT *
FM1 IND RDY FM2
ACMS PCMCIA DIRECTORY
PATH : / PCMCIA
SOFTWARE . CNF 11 MAY 1235 >
000001234 BYTES
< DAR . REC
< DIR >
< QAR . REC
< DIR >
< REPORTS . REC
< DIR >
< RETURN
PRINT *

PCMCIA

ACMS D/O (3)

WDAR RECORDING

The ACMS DAR RECORDING menu supplies manual start and stop of the Wireless DAR recording and real time display of Wireless DAR data, when the Wireless DAR is installed. The Wireless DAR recording can be manually initiated via the MANUAL START function. By pressing this key, the STOPPED or RUNNING status is displayed. The menu page also gives information on the programming of the WDAR function such as, history time, recording speed and data encoding type. Up to 8 pages of 5 WDAR words are available. The data is displayed in hexadecimal format after the selection of desired word numbers.

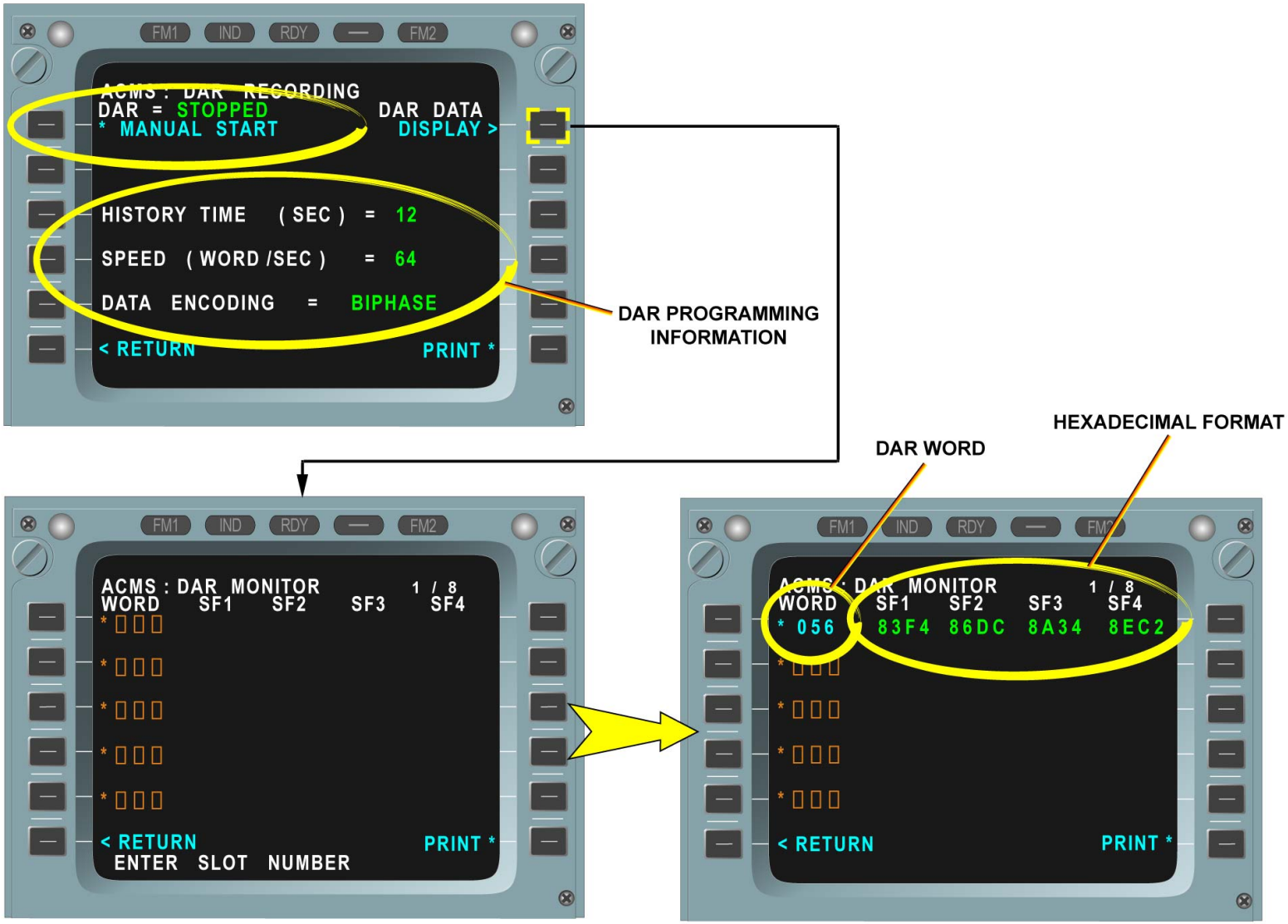

WDAR RECORDING

ACMS D/O (3)

STORED SAR DATA

The STORED SAR DATA menu gives a listing of all SAR recording channels with their related allocated memory size. In addition this menu is used for the dumping of a specific SAR selected channel files on a MDDU floppy disk. After selection of the requested SAR channel, the list of stored SAR files is called-up. This menu displays, for each file, the flight leg number with the associated trigger code, date and time when the file was created. This menu also provides the size of each SAR file. It is also possible to dump individual SAR files onto the MDDU.

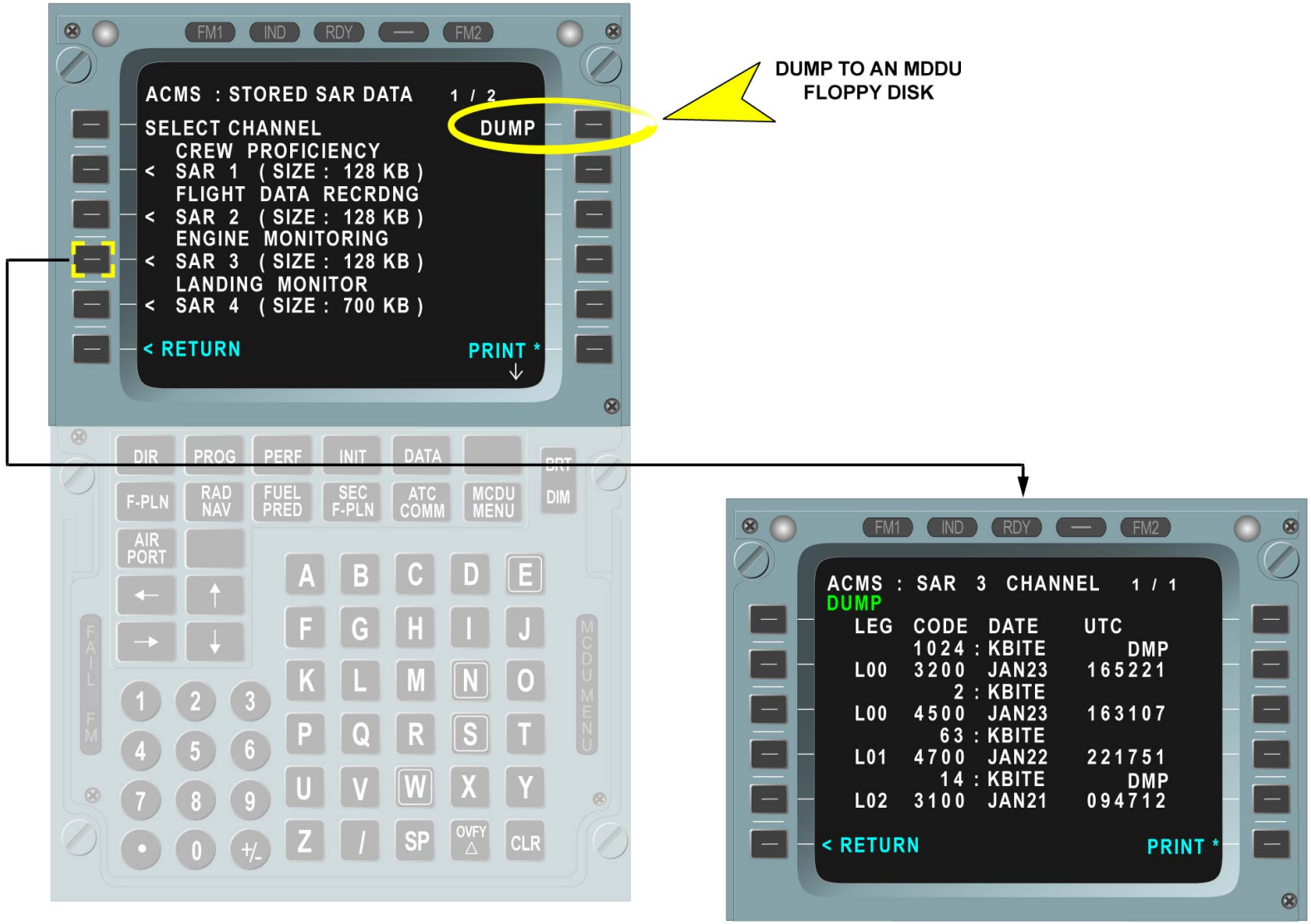

STORED SAR DATA

G7508471 - G3NT1T0 - FM31D6ACMSDO002

ACMS D/O (3)

MANUAL REQUEST SAR RECORDING

The Manual Request function supplies selective START/STOP control for each SAR recording channel. Each press of these keys toggles the "STOPPED/RUNNING" status of the appropriate channel.

G7508471 - G3NT1T0 - FM31D6ACMSDO002

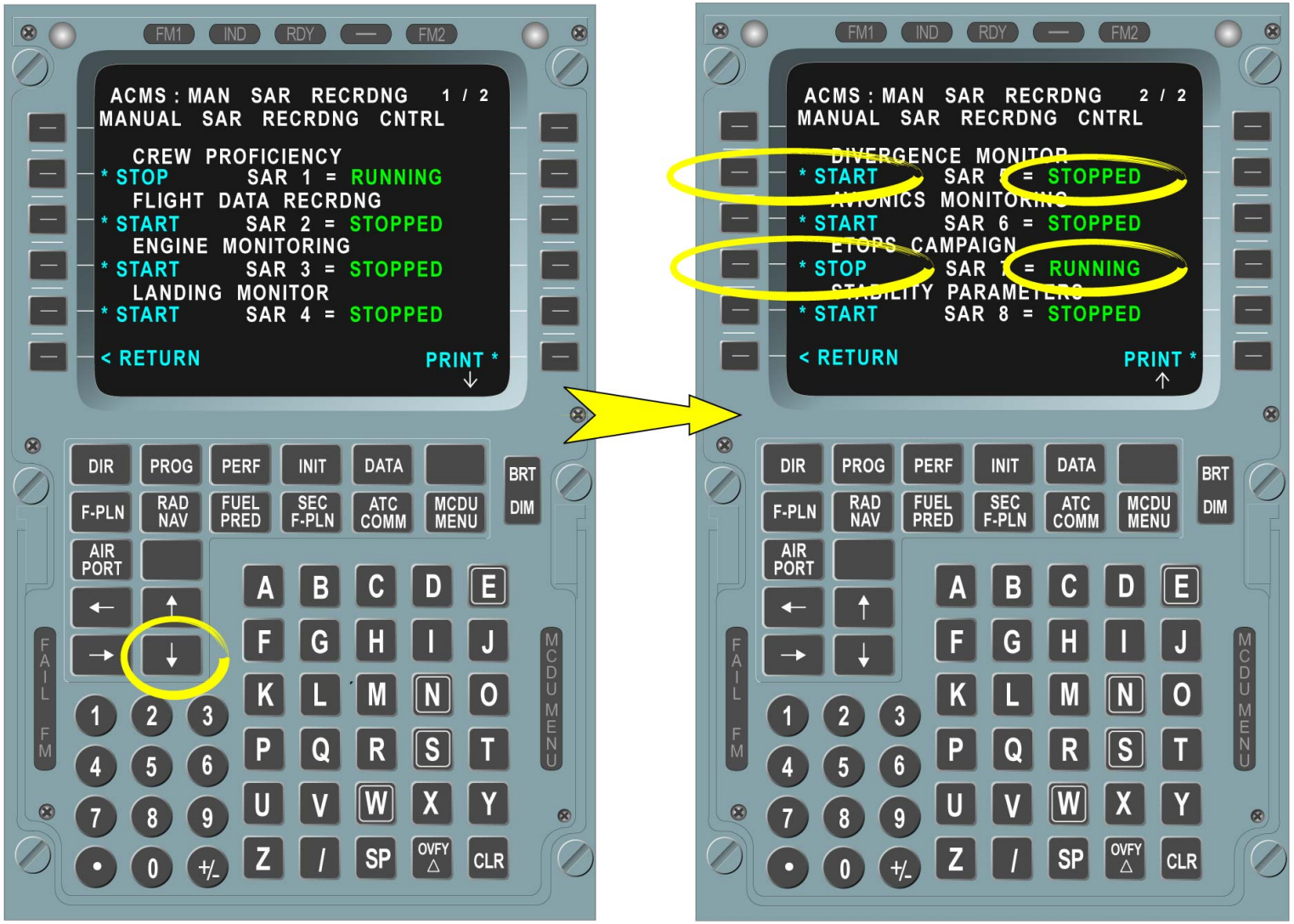

MANUAL REQUEST SAR RECORDING

ACMS D/O (3)

STORED REPORTS

The ACMS reports are built-up from alpha call-up codes. As long as a report is stored in the memory, the respective report title and report number is displayed. The selected report can be printed, sent to the Airline Operation Control (AOC) via the ATSU, or dumped onto a floppy disk thanks to the MDDU.
The list of stored reports includes the flight leg in which the report was generated, the related trigger code and date. Moreover, an output status is displayed and indicates:
- EOF Waiting for End-Of-Flight,
- WPR Waiting for Printing,
- PRT Printed,
- WDL Waiting for downlink,
- ACS In ACARS,
- DLK Down linked ,
- WDR Waiting for storage on WDAR,
- DAR Stored in WDAR.

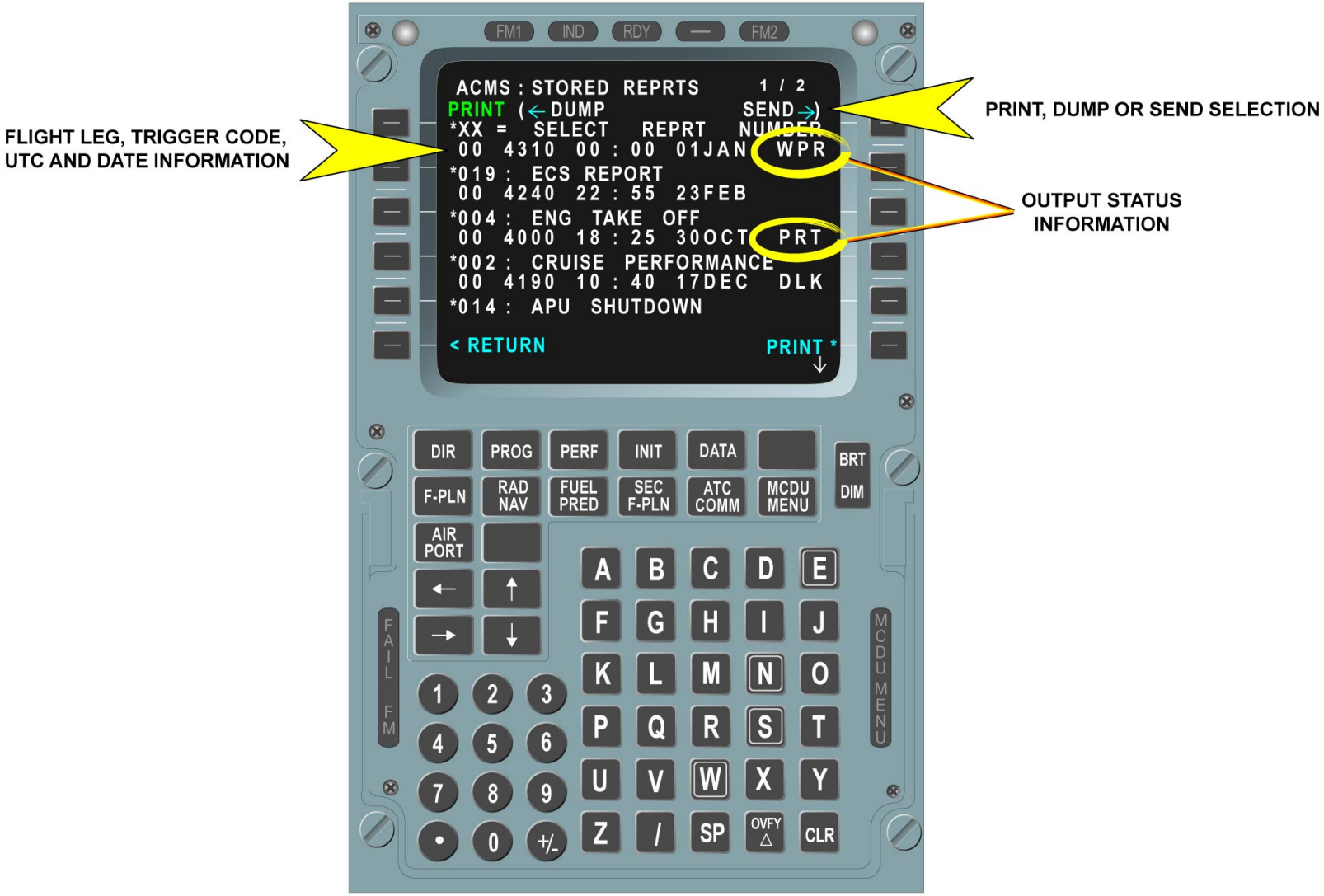

STORED REPORTS

ACMS D/O (3)

MANUAL REPORT REQUEST

The MANUAL REPORT REQUEST function is used, through report names with their associated number selection keys, for the immediate data collection and report generation. The selected report can be printed, sent to the Airline Operation Control via the ATSU, or dumped onto a floppy disk in the MDDU. An asterisk (*) is displayed for each report, if only a single data set or format has been defined for this report. If multiple formats or data sets are defined for a report, the symbol "less than" (<) is displayed instead of the asterisk. In this case, a MANUAL REPORT REQUEST FORMAT selects the display and the output of the content of the reports.

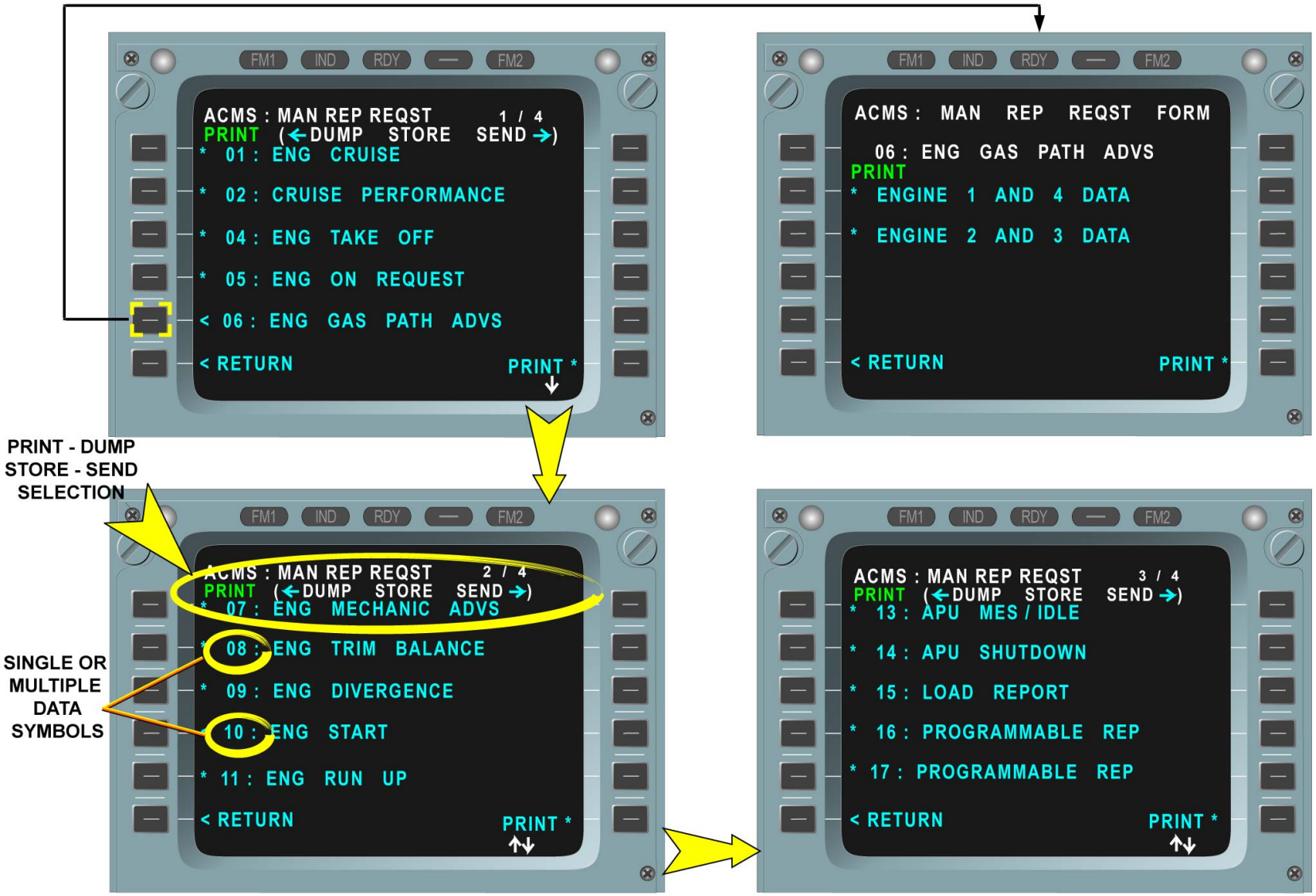

MANUAL REPORT REQUEST

G7508471 - G3NT1T0 - FM31D6ACMSDO002

ACMS D/O (3)

DATA SOURCES

The parameters from 26 computers, receivers or transceivers can be transmitted to the DMU and recorded.

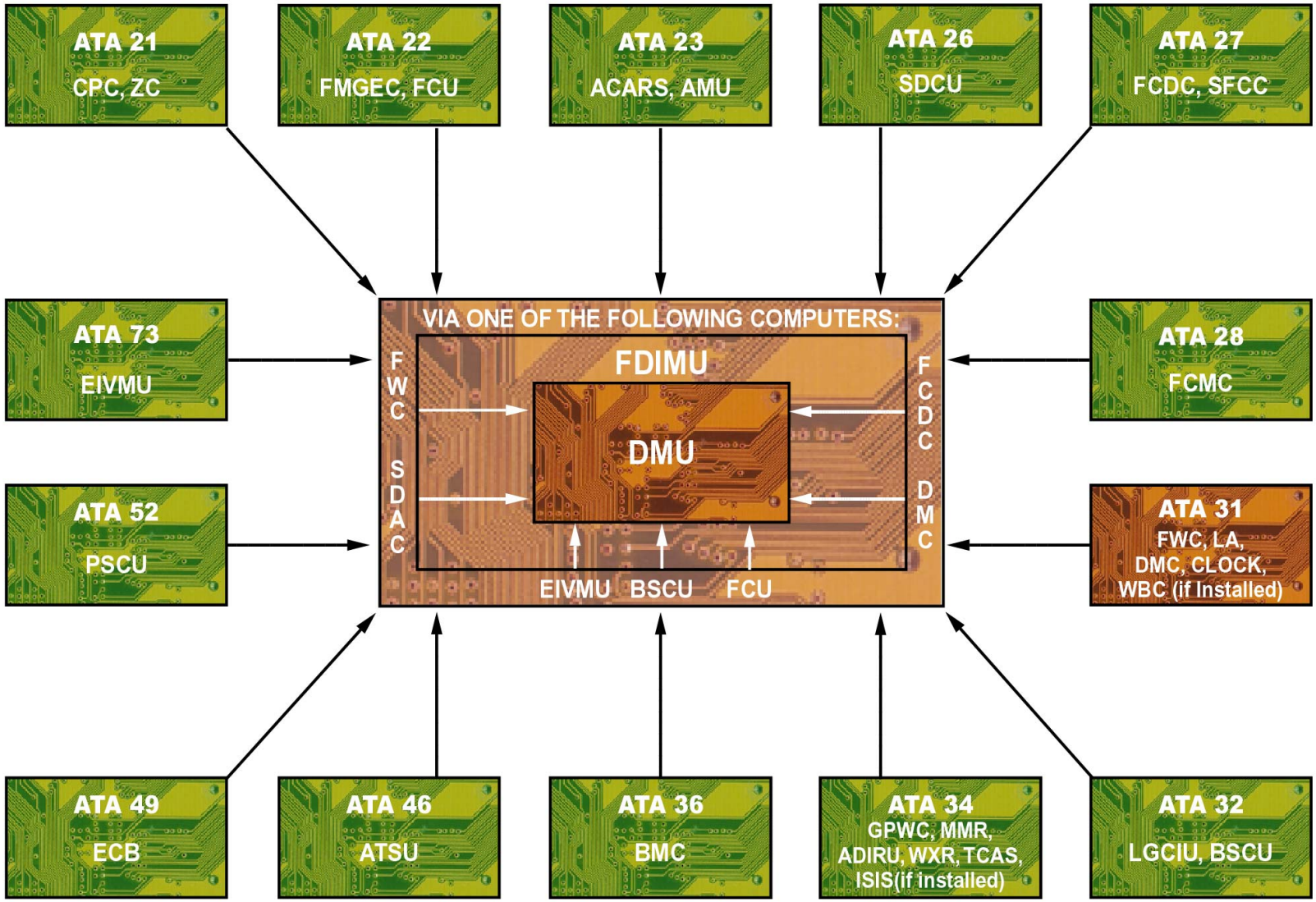

DATA SOURCES

G7508471 - G3NT1T0 - FM31D6ACMSDO002

ACMS REPORTS D/O (3)

GENERAL

There are four categories of preprogrammed reports:
- engine monitoring,
- Auxiliary Power Unit (APU) monitoring,
- Environmental Control System (ECS),
- Ram Air Turbine (RAT).

And there are three programmable reports for trouble shooting assistance. These reports are triggered and generated when specific conditions are met.

All the reports can be printed from the MCDU. Some reports can be printed through the ACMS (Aircraft Condition Monitoring System) PRINT P/B, sent through Aircraft Communication Addressing and Reporting System (ACARS), or dumped on the Multipurpose Disk Drive Unit (MDDU). The parameters contained in the reports are among the 300 parameters provided with an Alpha Call-Up.

Some Report data items can be reconfigured through Ground Support Equipment (GSE), such as: Report limits, constants, parameter conversion factor, report time and destination, triggers, ACMS PRINT P/B functionality and report enable.

G7508471 - G3NT1T0 - FM31D7000000003

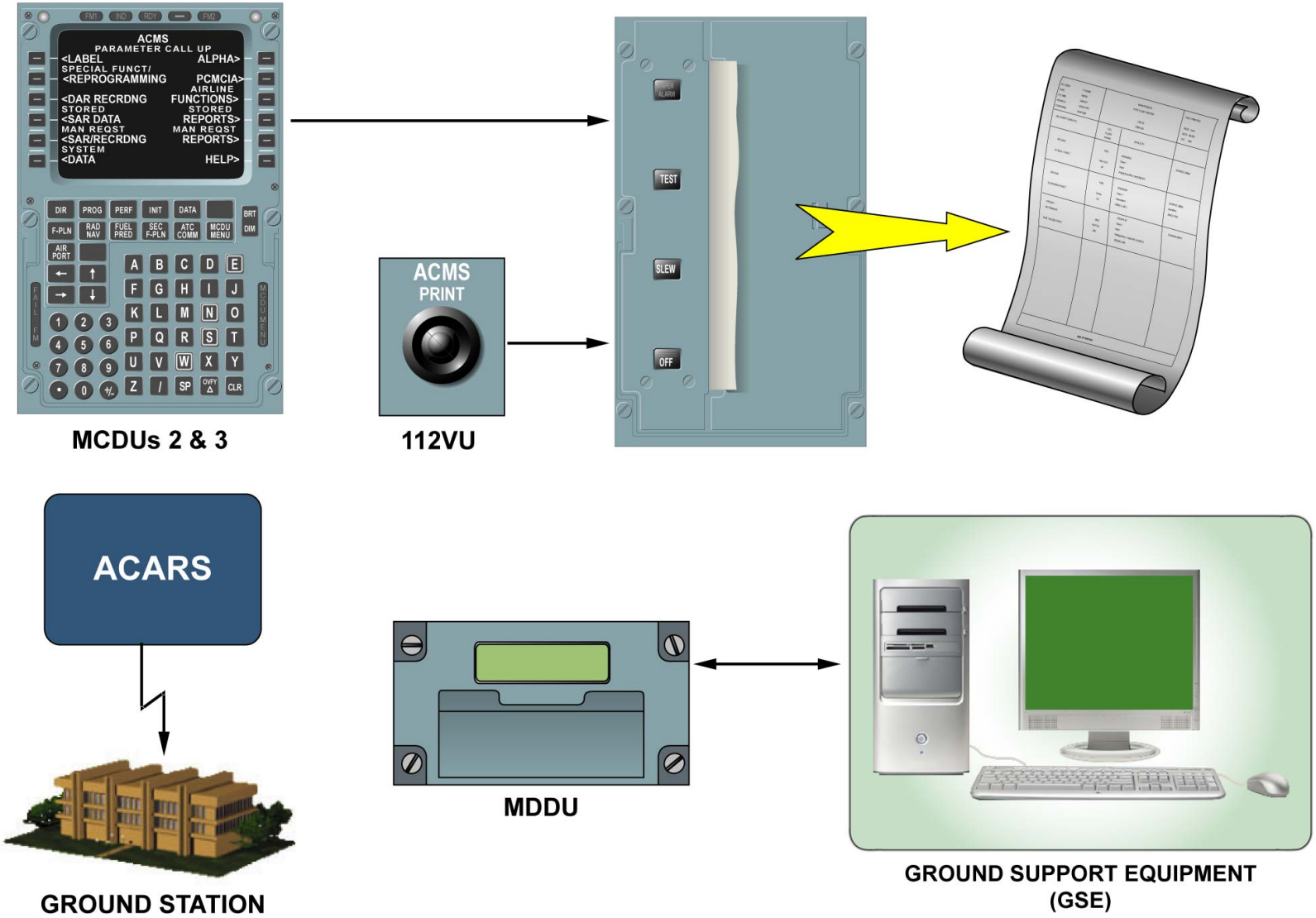
ACMS
PARAMETER CALL UP
<LABEL
SPECIAL FUNCT/
<REPROGRAMMING
<DAR RECRDNG
STORED
<SAR DATA
MAN REQST
<SAR/RECRDNG
SYSTEM
<DATA
ALPHA>
PCMCIA>
AIRLINE
FUNCTIONS>
STORED
REPORTS>
MAN REQST
REPORTS>
HELP>
MCDUs 2 & 3
ACMS
PRINT
112VU
TEST
SLEW
OFF
ACARS
GROUND STATION
MDDU
GROUND SUPPORT EQUIPMENT
(GSE)

GENERAL

ACMS REPORTS D/O (3)

PRINT REPORT STANDARD- HEADER DESCRIPTION

A standard header is printed on each report. It is composed of information about the report at the top, information about the flight, codes for report trigger conditions in the middle and general data at the bottom. Each data line starts with a two letter identifier. A checksum is printed in 2 hexadecimal characters at the end of each data line. The report information appears at the top of the report and it consists of 2 free programmable lines, which are available for airline specific messages, and another line that contains the report identification, title and number.

NOTE: Note: All reports shown on this module come from an A330 with GE engines.

A/C AND FLIGHT INFORMATION

The A/C and flight information on the report shows:
- A/C Identification, this is the tail number (ACID),
- date (DATE): year, month and day,
- Universal Time Coordinated (UTC): hours, minutes and seconds separated by points,
- city pair (FROM / TO),
- and Flight number (FLT).

TRIGGER CODES

The three left digits of the CODE are the logic code number that has triggered the report. The last digit shows the number of consecutive issued reports, or the letter "T" if the report was triggered via ACARS.
The trigger codes are the following:
- 1000: manual selection via MCDU,
- 2000: flight phase dependent manual selection via ACMS PRINT P/B if programmed,
- 3XXX: programmable start logic,
- 4000 to 7000: for these codes, refer to the table of the Aircraft Maintenance Manual (AMM) on ATA chapter 31, subchapter 36,
- reports are triggered by a combination of logic conditions.

When a report is generated by ACARS a request is sent. This request contains an appropriate ACARS Tieback code (TIEBCK) with 6 characters.

GENERAL DATA

The general data that appears on the first line (C1) is:
- Report Count (CNT) ; the three digits are the numbers of the reports that were previously initiated, either automatically or by the ACMS PRINT P/B,

The general data that appear on the second line (C2) are:
- Previous Report (PRV) ; the three digits are the report type number of the previously generated report,
- Flight Phase (PH),
- the Data Management Unit (DMU) software is identified with three part numbers: the System, the Version and the Customer software part number,
- Temporary Modifications (MOD) ; this is a three digit counter which determines the expiration time of temporary modifications of constants,
- Auto Pilot (AP) 1 or 2 status (i.e.: 012 means altitude hold mode active).

The general data that appear on the third line (C3) are:
- Total Air Temperature (TAT) ; in case of negative value it is indicated by "N" and positive value by "0" on the first character,
- Standard Altitude (ALT) ; negative value is indicated by "N" on the first character. Otherwise the first position is used for the value,
- Mach Number (MN),
- each digit of SYS part indicates the Air Data/Inertial Reference Unit (ADIRU) number of the respective TAT, ALT and MN value,
- BLEED STATUS data is the discrete coded information and numerical values. Each number indicates the position of the

G7508471 - G3NT1T0 - FM31D700000003

corresponding valve (open/closed) except the first and the last which indicate the pack flow value,
- APU digit indicates the bleed valve position (1 to indicate that the valve is opened, and 0 to indicate that is closed).

G7508471 - G3NT1T0 - FM31D7000000003

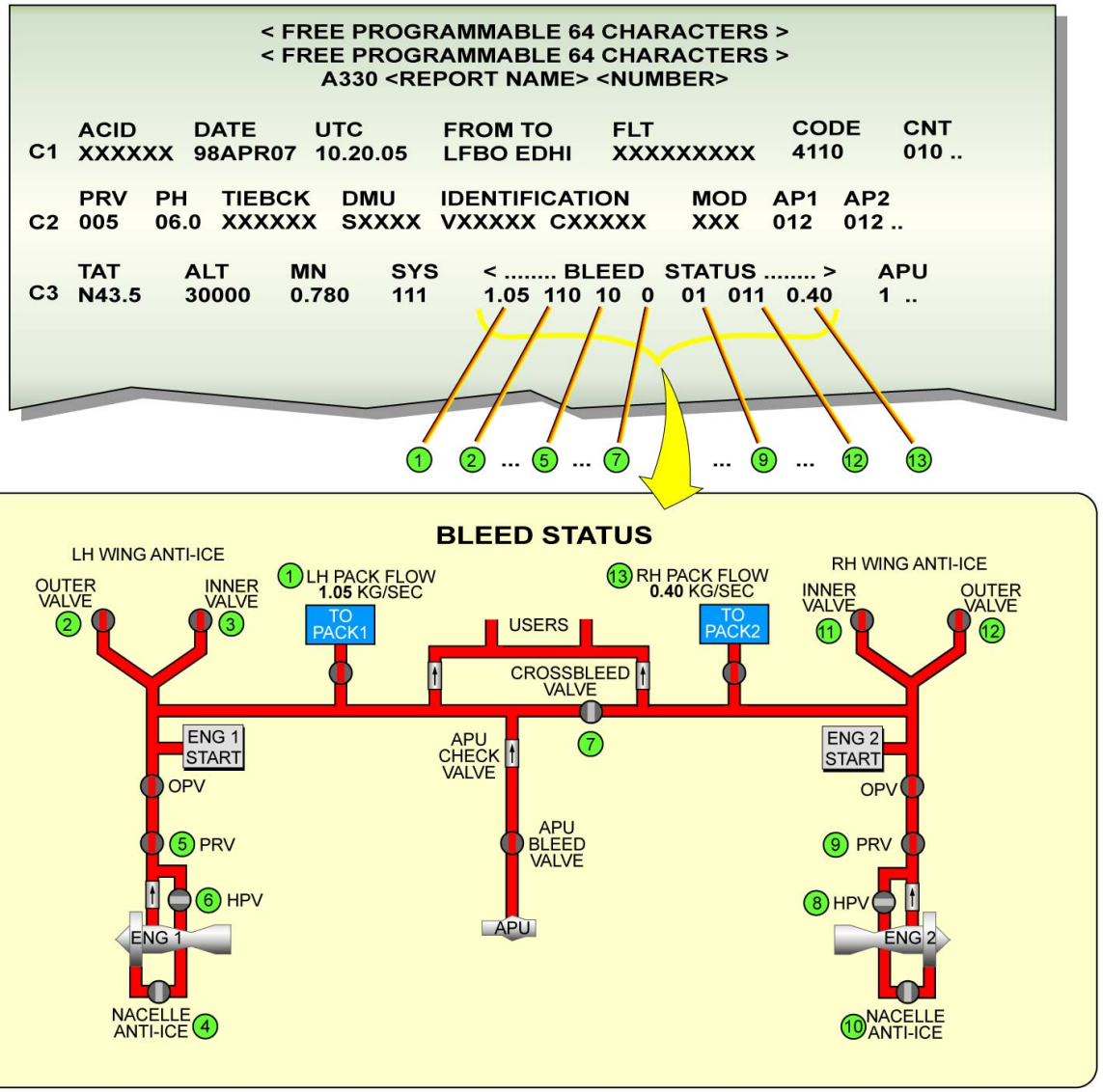

PRINT REPORT STANDARD- HEADER DESCRIPTION - A/C AND FLIGHT INFORMATION ... GENERAL DATA

G7508471 - G3NT1T0 - FM31D700000003

This Page Intentionally Left Blank

G7508471 - G3NT1T0 - FM31D7000000003

ACMS REPORTS D/O (3)

ENGINE CRUISE REPORT <01>

The Engine Cruise Report is generated when the A/C is in stable condition. It records operating conditions of the engines. All data is an average with the exception of:
- serial number,
- A/C Flight Hours (FH) with dedicated engine, running time, cycles,
- source status (status of Full Authority Digital Engine Control (FADEC) sensors),
- engine control word, engine vibration status,
- oil consumption, oil system chip detection.

CRUISE PERFORMANCE REPORT <02>

The Cruise Performance Report is similar to report <01> except that data is sampled for longer periods and more information is provided about the A/C and flight controls.

G7508471 - G3NT1T0 - FM31D7000000003

```
                    < FREE PROGRAMMABLE 64 CHARACTERS >
                    < FREE PROGRAMMABLE 64 CHARACTERS >
                   A330  CRUISE PERFORMANCE REPORT  < 02 >
     ACID      DATE      UTC       FROM TO     FLT              CODE     CNT
C1   XXXXXX    98APR07   10.20.05  LFBO EDHI   XXXXXXXXX        4110     010 ..

     PRV   PH    TIEBCK    DMU     IDENTIFICATION        MOD   AP1   AP2
C2   005   06.0  XXXXXX    SXXXX   VXXXXX  CXXXXX        XXX   012   012 ..

     TAT       ALT       MN        SYS     < ....... BLEED  STATUS ....... >      APU
C3   N43.5     30000     0.780     111     1.05  110  10   0   01   011   0.40   1 ..
     ESN       EHRS      ERT       ECYC    SOURCE STATUS     ECW1   EVM    NM  QA/QE
C5   731.205   00134     00216     00079   1111H1111111111   00010  26064  6   05 ..
C6   731.232   00317     00431     00223   5HH1H111111111S   00010  26064  6   05 ..

     N1        N1C       N1A       N2        EGT    P49     FF     PS14   P25
N1   086.20    086.6     086.20    090.8     0611   14.12   1351   17.42  34.12 ..
N2   086.21    086.4     086.21    090.7     0613   16.23   1362   19.20  35.78 ..

     T25    PS3    T3     T5     VSV   VBV   HPT   LPT   GLE    PD   TN
S1   67.42  223.3  560.3  600.4  25.3  30.4  040   060   030.4  20   210 ..
S2   67.09  224.6  550.3  610.2  26.2  31.2  041   062   032.8  21   217 ..

     OIQH   OIP    OIT    OC   VF    VC    VH    VL    PHF    PHT   BBF   BBT
T1   12.34  047    092.9  0    21.5  4.35  5.12  32.8  235    067   5.76  4.13 ..
T2   11.89  046    091.4  0    22.6  3.68  5.78  31.3  229    065   4.99  4.02 ..

     ELEV   AOA    DA     CIVU  CFPG   LATP
X1   N04.2  005.3  056.4  N001  1.0065 N45.21 ..
X2   N04.5  005.1  056.2  N001  1.0039 N45.60 ..

     RUDD   RUDT   STAB   ROLL  YAW   PTCH  DRM    GM     CG
X3   000.6  002.5  002.1  N00.7 N00.2 001.5 000100 235000 24.5 ..
     RSP1   RSP2   RSP3   RSP4  RSP5  RSP6  FLAP   SLAT   THDG
X4   000.3  000.2  000.2  000.1 000.3 000.2 000.4  020.0  0035.6 ..
X5   000.2  000.1  000.2  000.3 000.4 000.2 000.2  020.4  0035.2 ..

     AILL   AILR   WS   WD   AFT   AFD
X6   N07.1  N08.3  026  0237 045.3 0.025 ..
X7   N07.3  N08.0  027  0238 045.2 0.028 ..
```

Engine 1 data line
Engine 2 data line

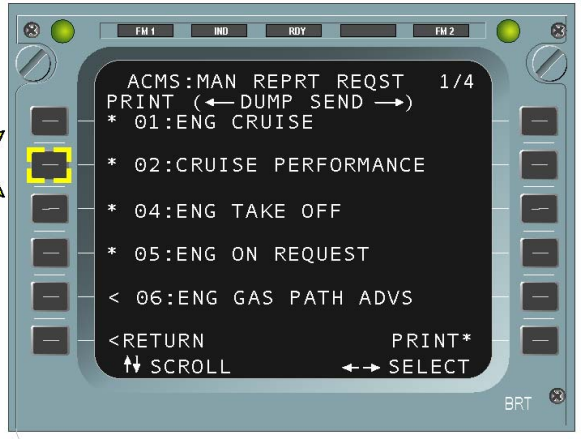

MCDU

A/C and flight controls information

THIS PRINT IS PROVIDED AS EXAMPLE

ENGINE CRUISE REPORT <01> & CRUISE PERFORMANCE REPORT <02>

ACMS REPORTS D/O (3)

ENGINE TAKEOFF REPORT <04>

The Engine Take Off Report is generated a few seconds after take-off. The number of intervals between each Engine Take-off Report generation is programmable. It collects parameters of A/C and engine during the take-off flight phase. "T/O DELTA N1 SUMMARY" is the difference between N1 MAX and N1 from the engine with the maximum value of N1. This report is used to check the trend and the stress of the engines at take-off.

G7508471 - G3NT1T0 - FM31D7000000003

```
                    < FREE PROGRAMMABLE 64 CHARACTERS >
                    < FREE PROGRAMMABLE 64 CHARACTERS >
                      A330  ENGINE TAKE OFF REPORT  < 04 >
     ACID      DATE      UTC       FROM TO     FLT          CODE     CNT
C1   XXXXXX    98APR07   10.20.05  LFBO EDHI   XXXXXXXXX    4110     010 ..

     PRV   PH    TIEBCK   DMU     IDENTIFICATION        MOD   AP1   AP2
C2   005   06.0  XXXXXX   SXXXX   VXXXXX  CXXXXX        XXX   012   012 ..

     TAT       ALT       MN        SYS     < ........ BLEED  STATUS ........ >     APU
C3   N43.5     30000     0.780     111     1.05  110  10   0   01   011   0.40    1  ..

     ESN       EHRS      ERT       ECYC    SOURCE STATUS     ECW1   ECWZ   EVM    NM
C5   731205    00134     00216     00079   111111111111111   00000  0040A  26064  8 ..
C6   731232    00317     00431     00223   1111H111111111S   00000  0040A  36064  4 ..

     T / O  DELTA  N1  SUMMARY

N1   03  02  00  00  00  01  00  00 ..
N2   03  02  00  00  00  01  00  00 ..

     N1        N1C       N1A       N1MX    NZ      P49     EGT     FF      P0      T12
S1   086.20    086.6     086.20    090.3   083.1   14.12   0612    1350    15.3    048.9 ..
S2   086.21    086.6     086.21    090.8   082.8   16.23   0612    1362    19.2    016.2 ..

     P25       T25       PS3       T3      T5      VSV     VBV     HPT     LPT     GLE
T1   34.10     67.4      223.3     560.3   600.4   25.3    30.4    040     060     030.4 ..
T2   35.78     67.0      224.8     550.3   610.2   26.2    31.2    041     062     032.8 ..

     PD   TN    OIP    OIT     VF    VC    VH    VL    PHF   PHT   BBF   BBT
V1   20   210   047    092.9   21.5  3.35  5.12  32.8  235   067   5.76  4.13 ..
V2   21   217   046    091.4   22.6  3.68  5.78  31.3  229   065   4.99  4.02 ..
```

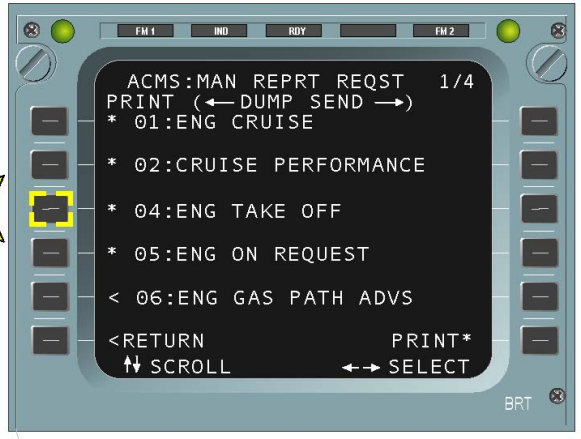

MCDU

THIS PRINT IS PROVIDED AS EXAMPLE

ENGINE TAKEOFF REPORT <04>

G7508471 - G3NT1T0 - FM31D700000003

ACMS REPORTS D/O (3)

ENGINE REPORT ON REQUEST <05>

The Engine Report On Request provides a snapshot of the engine parameters. This report can be generated by manual request thanks the ACMS PRINT P/B, or through the MCDU menu selection, or by the programmable triggers. The parameters recorded are taken in one second intervals from five seconds before the request to five seconds after.

G7508471 - G3NT1T0 - FM31D7000000003

```
                    < FREE PROGRAMMABLE 64 CHARACTERS >
                    < FREE PROGRAMMABLE 64 CHARACTERS >
                         A330  ENGINE REPORT O/R  <05 >
     ACID      DATE      UTC       FROM TO      FLT          CODE     CNT
C1   XXXXXX    98APR07   10.20.05  LFBO EDHI    XXXXXXXXX    4110     010 ..

     PRV   PH    TIEBCK    DMU     IDENTIFICATION        MOD   AP1   AP2
C2   005   06.0  XXXXXX    SXXXX   VXXXXX  CXXXXX        XXX   012   012 ..

     TAT       ALT       MN        SYS     < ........ BLEED  STATUS ........ >      APU
C3   N43.5     30000     0.780     111     1.05  110  10   0   01   011   0.40     1  ..

     ESN       EHRS      ERT       ECYC    SOURCE STATUS     ECW1   EVM    NM
C5   731.205   00134     00215     00079   111111111111111   00000  26064  8     ..
C6   731.232   00317     00431     00223   1111H111111111S   00000  36064  4     ..

                         PRE EVENT , 1 SEC INTERVALS
     N1 A      N2        EGT       FF      PS3     VF      VC      VH      VL      PHF   PHT
S1   086.20    086.6     0612      1351    214.2   20.4    3.50    2.99    30.8    225   180 ..
T1   086.21    086.4     0613      1344    235.4   19.2    3.41    3.25    31.3    228   181 ..
.
.
.
S5   086.20    086.6     0612      1351    214.2   20.4    3.50    2.99    30.8    225   180 ..
T5   086.21    086.4     0613      1344    235.4   19.2    3.41    3.25    31.3    228   181 ..

                         AT AND POST EVENT , 1 SEC INTERVALS
S6   086.20    086.6     0612      1351    214.2   20.4    3.50    2.99    30.8    225   180 ..
T6   086.21    086.4     0613      1344    235.4   19.2    3.41    3.25    31.3    228   181 ..
.
.
.
.
1S   086.20    086.6     0612      1351    214.2   20.4    3.50    2.99    30.8    225   180 ..
1T   086.21    086.4     0613      1344    235.4   19.2    3.41    3.25    31.3    228   181 ..

     TAT       ALT       MN        SYS     < ........ BLEED  STATUS ........ >      APU
C7   N43.5     30000     0.780     111     1.05  110  10   0   01   011   0.40     1  ..
```

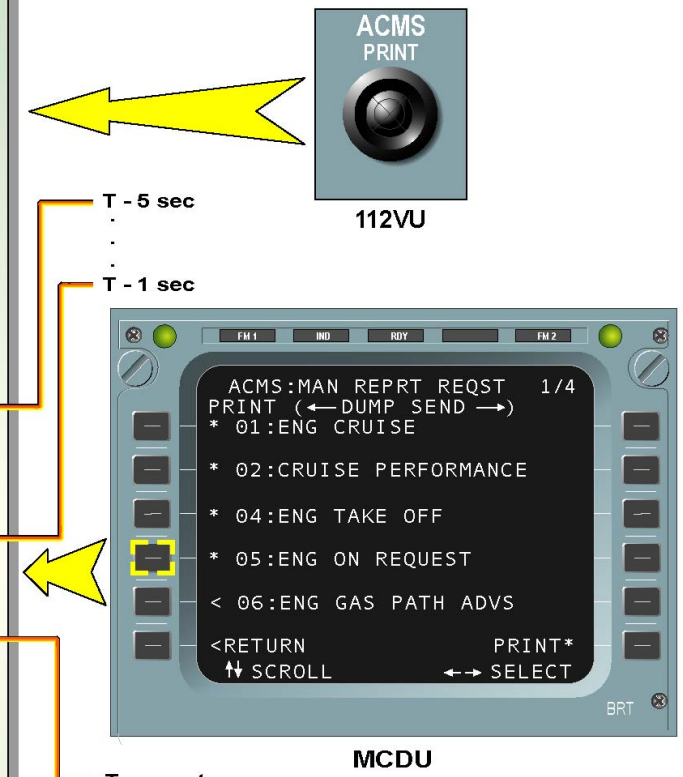

THIS PRINT IS PROVIDED AS EXAMPLE

ENGINE REPORT ON REQUEST <05>

G7508471 - G3NT1T0 - FM31D700000003

ACMS REPORTS D/O (3)

ENGINE GAS PATH ADVISORY REPORT <06>

The Engine Gas Path Advisory Report is generated when there is an excess of one of the primary engine parameters (EGT/N1/N2) or either a stall, shutdown or flame out condition exists on one engine. Four sets of parameters are recorded at one second intervals before the event and five sets are recorded at one second intervals after the event.

G7508471 - G3NT1T0 - FM31D7000000003

```
                    < FREE PROGRAMMABLE 64 CHARACTERS >
                    < FREE PROGRAMMABLE 64 CHARACTERS >
              A330  ENGINE GAS PATH ADVISORY REPORT  < 06 >
     ACID      DATE      UTC       FROM TO     FLT          CODE     CNT
C1   XXXXXX    98APR07   10.20.05  LFBO EDHI   XXXXXXXXX    4110     010 ..

     PRV   PH    TIEBCK    DMU     IDENTIFICATION        MOD   AP1   AP2
C2   005   06.0  XXXXXX    SXXXX   VXXXXX  CXXXXX        XXX   012   012 ..

     TAT       ALT       MN        SYS     < ........ BLEED  STATUS ........ >      APU
C3   N43.5     30000     0.780     111     1.05  110  10   0   01   011   0.40     1  ..

     ESN       EHRS      ERT       ECYC    SOURCE STATUS     ECM1   EVN3   NM
C5   731205    00134     00215     00079   111111111111111   00000  01040  8 ..
C6   731232    00317     00431     00223   1111H111111111S   00000  01040  4 ..
     LIMIT EXCEEDANCE SUMMARY          REASON : EGT
      E   MAX   LIM  TOL  TTP   N2    N1P   N2P    EGTM
N1   1  187.00 019.05  060  030  067.9  078.6  089.0  0612 ..
                         PRE EVENT , 1 SEC INTERVALS
     N1A       N1C       N2        EGT     FF      P25     T25     PS3     T3
S1   086.20    086.6     090.8     0612    1351    34.12   67.42   223.3   560.3 ..
T1   086.21    086.4     089.7     0613    1350    33.83   66.35   224.5   561.2 ..
     TAT       ALT       MN        SYS     < ........ BLEED  STATUS ........ >      APU
1C   N43.5     30000     0.780     111     1.05  110  10   0   01   011   0.40     1  ..
S2   086.20    086.6     090.8     0612    1351    34.12   67.42   223.3   560.3 ..
T2   086.21    086.4     089.7     0613    1350    33.83   66.35   224.5   561.2 ..
2C   N43.5     30000     0.780     111     1.05  110  10   0   01   011   0.40     1  ..
.
S4   086.20    086.6     090.8     0612    1351    34.12   67.42   223.3   560.3 ..
T4   086.21    086.4     089.7     0613    1350    33.83   66.35   224.5   561.2 ..
4C   N43.5     30000     0.780     111     1.05  110  10   0   01   011   0.40     1  ..
                         AT AND POST EVENT , 1 SEC INTERVALS
S5   086.20    086.6     090.8     0612    1351    34.12   67.42   223.3   560.3 ..
T5   086.21    086.4     089.7     0613    1350    33.83   66.35   224.5   561.2 ..
5C   N43.5     30000     0.780     111     1.05  110  10   0   01   011   0.40     1  ..
 .
 .
 .
S9   086.20    086.6     090.8     0612    1351    34.12   67.42   223.3   560.3 ..
T9   086.21    086.4     089.7     0613    1350    33.83   66.35   224.5   561.2 ..
9C   N43.5     30000     0.780     111     1.05  110  10   0   01   011   0.40     1  ..
```

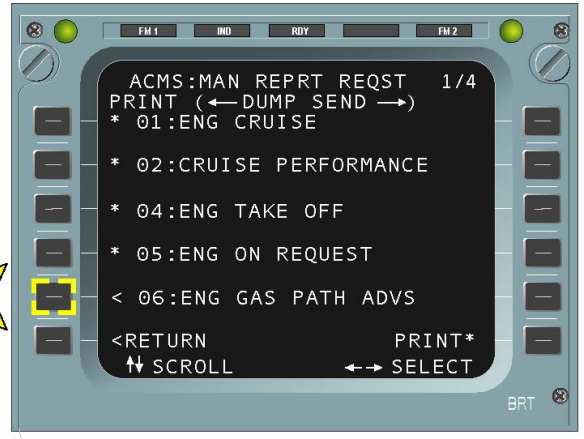

MCDU

THIS PRINT IS PROVIDED AS EXAMPLE

ENGINE GAS PATH ADVISORY REPORT <06>

G7508471 - G3NT1T0 - FM31D700000003

ACMS REPORTS D/O (3)

ENGINE MECHANICAL ADVISORY REPORT <07>

The Engine Mechanical Advisory report is generated when there is an excess of one of the following engine parameters:
- oil temperature,
- oil pressure,
- nacelle temperature,
- N1 and N2 vibration,
- and the system chip detection.

Five parameter sets are recorded at one second intervals before the event and 9 parameter sets at one second intervals after the event. There is one report for each engine.

G7508471 - G3NT1T0 - FM31D7000000003

```
                    < FREE PROGRAMMABLE 64 CHARACTERS >
                    < FREE PROGRAMMABLE 64 CHARACTERS >
              A330  ENGINE MECHANICAL ADVISORY REPORT  < 07 >
     ACID      DATE      UTC       FROM TO     FLT          CODE     CNT
C1   XXXXXX    98APR07   10.20.05  LFBO EDHI   XXXXXXXXX    4110     010 ..

     PRV   PH    TIEBCK   DMU     IDENTIFICATION        MOD   AP1   AP2
C2   005   06.0  XXXXXX   SXXXX   VXXXXX  CXXXXX        XXX   012   012 ..

     TAT       ALT       MN       SYS     < ........ BLEED  STATUS ........ >     APU
C3   N43.5     30000     0.780    111     1.05  110  10   0   01   011   0.40    1  ..

     ESN       EHRS      ERT      ECYC    SOURCE STATUS      ECM1   EVN3   NM
C4   731205    00134     00215    00079   111111111111111    00000  01040  8 ..
     LIMIT EXCEEDANCE SUMMARY   REASON : VIB N1
     E   MAX    LIM     TOL  TTP  N1    N2    EVM    OIT   OIQ  OF  OC
N1   1   187.00 019.06  060  030  067.9 070.4 26064  200.2 073  01  0 ..
                         PRE EVENT , 1 SEC INTERVALS
     N1      N2      VF   VC   VH   VL   PHF  PHT  BBF  BBT  OIP
S1   086.20  086.6   30.4 2.72 3.48 29.3 223  235  5.64 4.56 340 ..
S2   086.20  086.6   30.4 2.72 3.48 29.3 223  235  5.64 4.56 340 ..
S3   086.20  086.6   30.4 2.72 3.48 29.3 223  235  5.64 4.56 340 ..
S4   086.20  086.6   30.4 2.72 3.48 29.3 223  235  5.64 4.56 340 ..
S5   086.20  086.6   30.4 2.72 3.48 29.3 223  235  5.64 4.56 340 ..
                         AT AND POST EVENT , 1 SEC INTERVALS
S6   086.20  086.6   30.4 2.72 3.48 29.3 223  235  5.64 4.56 340 ..
S7   086.20  086.6   30.4 2.72 3.48 29.3 223  235  5.64 4.56 340 ..
S8   086.20  086.6   30.4 2.72 3.48 29.3 223  235  5.64 4.56 340 ..
S9   086.20  086.6   30.4 2.72 3.48 29.3 223  235  5.64 4.56 340 ..
S0   086.20  086.6   30.4 2.72 3.48 29.3 223  235  5.64 4.56 340 ..
1S   086.20  086.6   30.4 2.72 3.48 29.3 223  235  5.64 4.56 340 ..
2S   086.20  086.6   30.4 2.72 3.48 29.3 223  235  5.64 4.56 340 ..
3S   086.20  086.6   30.4 2.72 3.48 29.3 223  235  5.64 4.56 340 ..
4S   086.20  086.6   30.4 2.72 3.48 29.3 223  235  5.64 4.56 340 ..
5S   086.20  086.6   30.4 2.72 3.48 29.3 223  235  5.64 4.56 340 ..
```

MCDU

THIS PRINT IS PROVIDED AS EXAMPLE

ENGINE MECHANICAL ADVISORY REPORT <07>

G7508471 - G3NT1T0 - FM31D700000003

ACMS REPORTS D/O (3)

ENGINE TRIM BALANCE ADVISORY REPORT <08>

The Engine Balance Advisory Report will monitor for stable engine conditions during each of five different flight phases. The data collection will be an averaged collection over the stable engine conditions for these flight phases. Each flight phase average data set contains engine spool speeds, engine vibrations and vibration phase angle for both the turbine and the fan for all engine positions. The information contained on this report can be used to balance the engine spools.

G7508471 - G3NT1T0 - FM31D7000000003

```
                    < FREE PROGRAMMABLE 64 CHARACTERS >
                    < FREE PROGRAMMABLE 64 CHARACTERS >
                 A330  ENGINE TRIM BALANCE ADV REPORT  < 08 >
     ACID      DATE      UTC       FROM TO     FLT          CODE     CNT
C1   XXXXXX    98APR07   10.20.05  LFBO EDHI   XXXXXXXXX    4110     010 ..

     PRV   PH    TIEBCK    DMU     IDENTIFICATION       MOD   AP1   AP2
C2   005   06.0  XXXXXX    SXXXX   VXXXXX  CXXXXX       XXX   012   012 ..

     TAT       ALT       MN       SYS     < ....... BLEED  STATUS ........ >     APU
C3   N43.5     30000     0.780    111     1.05  110  10   0   01   011  0.40    1  ..

     ESN       EHRS      ERT      ECYC    SOURCE STATUS     ECW1   NM
C5   731.205   00134     00215    00079   111111111111111   00000  8    ..
C6   731.232   00317     00431    00223   1111H111111111S   00000  4    ..

     UTC       PH   ALT    MN
E1   10.20.40  6.0  28349  0.68

     VF    VC    VH    VL    PHF   PHT   BBF   BBT   N1A      N2     EVM
S1   21.5  3.35  5.12  32.8  235   067   5.76  4.13  086.20   083.1  26064 ..
T1   22.6  3.68  5.78  31.3  239   065   4.99  4.02  086.21   082.8  36064 ..
.
.
.
.
E5   10.20.40  6.0  28349  0.68
S5   21.5  3.35  5.12  32.8  235   067   5.76  4.13  086.20   083.1  26064 ..
T5   22.6  3.68  5.78  31.3  229   065   4.99  4.02  086.21   082.8  36064 ..
```

MCDU

First data set
.
.
.
.
Fifth data set

THIS PRINT IS PROVIDED AS EXAMPLE

ENGINE TRIM BALANCE ADVISORY REPORT <08>

ACMS REPORTS D/O (3)

ENGINE DIVERGENCE REPORT <09>

The Engine Divergence Report is generated when the Exhaust Gas Temperature divergence or Nacelle Temperature divergence threshold values are exceeded on at least one engine. Three parameter sets are recorded at two seconds intervals before the event and three parameter sets at two seconds intervals after the event.

G7508471 - G3NT1T0 - FM31D7000000003

```
                    < FREE PROGRAMMABLE 64 CHARACTERS >
                    < FREE PROGRAMMABLE 64 CHARACTERS >
                    A330  ENGINE DIVERGENCE REPORT  < 09 >
     ACID      DATE      UTC       FROM TO      FLT              CODE     CNT
C1   XXXXXX    98APR07   10.20.05  LFBO EDHI    XXXXXXXXX        4110     010 ..

     PRV   PH    TIEBCK    DMU     IDENTIFICATION        MOD   AP1   AP2
C2   005   06.0  XXXXXX    SXXXX   VXXXXX  CXXXXX        XXX   012   012 ..

     TAT       ALT       MN        SYS      < ........ BLEED  STATUS ........ >      APU
C3   N43.5     30000     0.780     111      1.05  110  10   0   01   011   0.40      1  ..

     ESN       EHRS      ERT       ECYC     SOURCE STATUS     ECW1   NM
C5   731205    00134     00216     00079    111111111111111   00000  8     ..
C6   731232    00317     00431     00223    1111H111111111S   00000  4     ..

     DIVERGENCE SUMMARY                 REASON :  TN
     E   EDV5   ERF5   NDV5   NRF5   EDV6   ERF6   NDV6   NRF6   K
N1   1   XXXX   XXXX   XXX.X  XXX.X  XXXX   XXXX   XXX.X  XXX.X  10 ..
                         PRE EVENT , 2 SEC INTERVALS
     N1       N1C    N1A      N2     EQT    P49      FF     TN     VSV    VBV
S1   086.20   086.6  086.20   090.8  0612   14.12    1351   210.0  25.3   30.4  ..
T1   086.21   086.4  086.21   089.7  0613   16.23    1350   212.4  25.1   30.2  ..
.
.
S3   086.20   086.6  086.20   090.8  0612   14.12    1351   210.0  25.3   30.4  ..
T3   086.21   086.4  086.21   089.7  0613   16.23    1350   212.4  25.1   30.2  ..
                       AT AND POST EVENT , 2 SEC INTERVALS
S4   086.20   086.6  086.20   090.8  0612   14.12    1351   210.0  25.3   30.4  ..
T4   086.21   086.4  086.21   089.7  0613   16.23    1350   212.4  25.1   30.2  ..
.
.
S7   086.20   086.6  086.20   090.8  0612   14.12    1351   210.0  25.3   30.4  ..
T7   086.21   086.4  086.21   089.7  0613   16.23    1350   212.4  25.1   30.2  ..
```

MCDU

THIS PRINT IS PROVIDED AS EXAMPLE

ENGINE DIVERGENCE REPORT <09>

G7508471 - G3NT1T0 - FM31D700000003

ACMS REPORTS D/O (3)

ENGINE START REPORT <10>

The Engine Start Report is generated when an abnormal start has been detected during main engine start and every 25 engine starts.
There is one report for each engine. Three parameter sets are recorded at six seconds intervals before the event and three parameter sets are recorded at two seconds intervals after the event.

G7508471 - G3NT1T0 - FM31D7000000003

```
                    < FREE PROGRAMMABLE 64 CHARACTERS >
                    < FREE PROGRAMMABLE 64 CHARACTERS >
                      A330  ENGINE START REPORT  < 10 >
     ACID      DATE      UTC       FROM TO      FLT            CODE     CNT
C1   XXXXXX    98APR07   10.20.05  LFBO EDHI    XXXXXXXXX      4110     010 ..

     PRV   PH    TIEBCK    DMU     IDENTIFICATION        MOD   AP1   AP2
C2   005   06.0  XXXXXX    SXXXX   VXXXXX  CXXXXX        XXX   012   012 ..

     TAT       ALT       MN        SYS      < ........ BLEED  STATUS ........ >      APU
C3   N43.5     30000     0.780     111      1.05  110  10   0   01   011   0.40      1  ..

     ESN       EHRS      ERT       ECYC     SOURCE STATUS     NM
C5   731.205   00134     00215     00079    111111111111111    8    ..
C6   731.232   00317     00431     00223    1111H111111111S    4    ..
     LIMIT EXCEEDANCE SUMMARY        REASON:  LOW AIR PRESSURE
     E  MAX     T0S   TTP   TTA   TTF   FF    PD   S
N1   1  167.00  021   030   015   022   0123  25   10  ..
                        PRE EVENT , 6 SEC INTERVALS
      N1      N1A     N2     EGT   P49    FF     FMV  T25    PD  PS3
S1    086.20  086.20  090.8  0612  14.12  1351   040  036.7  22  231.3 ..
      T3      VSV     VBV    T5    OIP    IOT    ECW4     ECN5
T1    500.4   25.3    30.4   357.8 125    057.8  00045    0054A ..
S2    086.20  086.20  090.8  0612  14.12  1351   040  036.7  22  231.3 ..
T2    500.4   25.3    30.4   357.8 125    057.8  00045    0054A ..
S3    086.20  086.20  090.8  0612  14.12  1351   040  036.7  22  231.3 ..
T3    500.4   25.3    30.4   357.8 125    057.8  00045    0054A ..
                     AT AND POST EVENT , 2 SEC INTERVALS
S4    086.20  086.20  090.8  0612  14.12  1351   040  036.7  22  231.3 ..
T4    500.4   25.3    30.4   357.8 125    057.8  00045    0054A ..
S5    086.20  086.20  090.8  0612  14.12  1351   040  036.7  22  231.3 ..
T5    500.4   25.3    30.4   357.8 125    057.8  00045    0054A ..
S6    086.20  086.20  090.8  0612  14.12  1351   040  036.7  22  231.3 ..
T6    500.4   25.3    30.4   357.8 125    057.8  00045    0054A ..
S7    086.20  086.20  090.8  0612  14.12  1351   040  036.7  22  231.3 ..
T7    500.4   25.3    30.4   357.8 125    057.8  00045    0054A ..
```

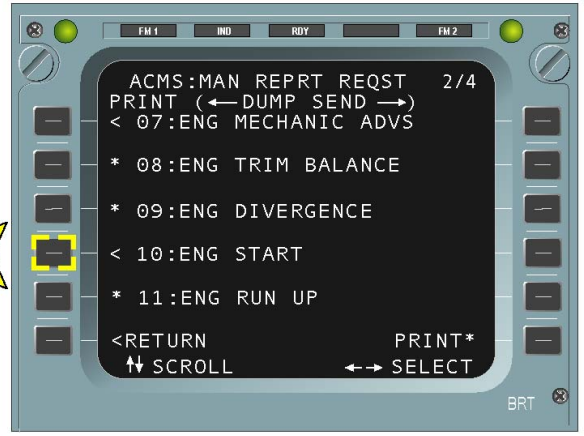

MCDU

THIS PRINT IS PROVIDED AS EXAMPLE

ENGINE START REPORT <10>

ACMS REPORTS D/O (3)

ENGINE RUN UP REPORT <11>

The Engine Run Up Report is only triggered by manual request through the ACMS PRINT P/B, or the MCDU. It contains the same data as the engine cruise report, plus corrected parameters for the ambient temperature. All data is an average over 20 seconds with the exception of:
- A/C serial number,
- FH with dedicated engine, cycles, control word and vibration status,
- A/C running time with dedicated engine,
- status of FADEC sensors,
- and oil quantity.

G7508471 - G3NT1T0 - FM31D7000000003

```
                    < FREE PROGRAMMABLE 64 CHARACTERS >
                    < FREE PROGRAMMABLE 64 CHARACTERS >
                      A330  ENGINE RUN UP REPORT  < 11 >
     ACID      DATE      UTC       FROM TO     FLT          CODE     CNT
C1   XXXXXX    98APR07   10.20.05  LFBO EDHI   XXXXXXXXX    4110     010 ..

     PRV   PH    TIEBCK    DMU     IDENTIFICATION        MOD   AP1   AP2
C2   005   06.0  XXXXXX    SXXXX   VXXXXX  CXXXXX        XXX   012   012 ..

     TAT       ALT       MN        SYS     < ........ BLEED  STATUS ........ >     APU
C3   N43.5     30000     0.780     111     1.05  110  10   0   01   011   0.40    1 ..

     ESN       EHRS      ERT       ECYC    SOURCE STATUS     ECW1   EVM    NM
C5   731.205   00134     00215     00079   111111111111111   00000  26064  8     ..
C6   731.232   00317     00431     00223   1111H111111111S   00000  36064  4     ..

     N1        N1C       N1A       N2      EGT    P49     FF      PS14     PT2      P25
N1   086.20    086.4     086.21    090.6   0511   14.12   1361    17.42    14.12    34.12 ..
N2   086.21    086.4     086.21    090.7   0513   16.23   1362    19.20    16.23    35.78 ..

     T25       PS3       T3        T5      FMV   VSV   VBV   HPT   LPT   RAC   OLE
S1   67.42     223.3     560.3     600.4   020.4 25.3  30.4  040   060   070   030.4 ..
S2   67.09     224.6     550.3     610.2   021.3 26.2  31.2  041   062   069   032.8 ..

     PD   TN   OID   OIP   OIT    VF    VC    VH    VL    PHF   PHT   BBF   BBT
T1   20   210  093   047   092.9  21.5  4.35  5.12  32.8  235   067   5.76  4.13
T2   21   217  094   046   091.4  22.6  3.60  5.78  31.3  229   065   4.99  4.02

     EGTK      N1K       N2K       FFK
V1   1042      090.2     080.4     3892 ..
V2   1010      092.4     084.6     3586 ..
```

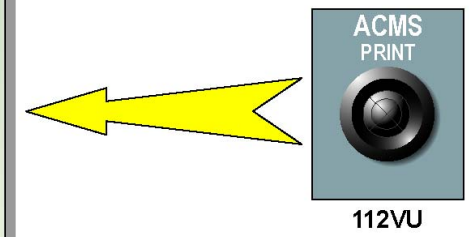

112VU

MCDU

corrected parameters

THIS PRINT IS PROVIDED AS EXAMPLE

ENGINE RUN UP REPORT <11>

ACMS REPORTS D/O (3)

APU MES/IDLE REPORT <13>

The APU MES(Main Engine Start)/IDLE Report is generated when the engine is started with the APU during maximum load. It presents APU parameters during and after engine start and at APU idle. It also presents the previous APU start parameters.

G7508471 - G3NT1T0 - FM31D700000003

```
                    < FREE PROGRAMMABLE 64 CHARACTERS >
                    < FREE PROGRAMMABLE 64 CHARACTERS >
                       A330  APU MES/IDLE REPORT  < 13 >
     ACID      DATE      UTC       FROM TO     FLT          CODE     CNT
C1   XXXXXX    98APR07   10.20.05  LFBO EDHI   XXXXXXXXX    4110     010 ..

     PRV   PH    TIEBCK    DMU     IDENTIFICATION       MOD   AP1   AP2
C2   005   06.0  XXXXXX    SXXXX   VXXXXX  CXXXXX       XXX   012   012 ..

     TAT       ALT       MN       SYS     < ........ BLEED  STATUS ........ >     APU
C3   N43.5     30000     0.780    111     1.05  110  10   0   01   011   0.40     1  ..

     ASN       AHRS      ACYC     ECID     ACW1
E1   0234      00230     00403    134876   XXXXX  ..

     ESN     EGTA   GLA   WB   PT   P2A   LCOT   LCIT   IGV   SCV   LOT   HOT
N1   234330  0830   120   2394 30.5 10.3  0120   0040   045   035   120   112  ..
N2   238560  0840   123   2345 31.2 11.2  0138   0046   032   034   121   113  ..
N3   235385  0867   134   2368 30.1 10.6  0146   0043   040   033   119   113  ..

     PREVIOUS  APU  START
     STA  EGTP  NPA  LOT  LCIT
V1   021  0671  036  127  0042
```

Parameters from:
engine nº2 start
engine nº3 start
APU cooldown

MCDU

The previous
APU start

THIS PRINT
IS PROVIDED
AS EXAMPLE

APU MES/IDLE REPORT <13>

G7508471 - G3NT1T0 - FM31D700000003

ACMS REPORTS D/O (3)

APU SHUTDOWN REPORT <14>

The APU Shutdown Report is generated when an abnormal APU shutdown is detected. Nine data sets are recorded at one second intervals before the event and one data set at the event.

G7508471 - G3NT1T0 - FM31D7000000003

```
                    < FREE PROGRAMMABLE 64 CHARACTERS >
                    < FREE PROGRAMMABLE 64 CHARACTERS >
                      A330  APU SHUTDOWN REPORT  < 14 >
     ACID      DATE      UTC       FROM TO      FLT          CODE     CNT
C1   XXXXXX    98APR07   10.20.05  LFBO EDHI    XXXXXXXXX    4110     010 ..

     PRV   PH    TIEBCK    DMU     IDENTIFICATION        MOD   AP1   AP2
C2   005   06.0  XXXXXX    SXXXX   VXXXXX  CXXXXX        XXX   012   012 ..

     TAT       ALT       MN       SYS     < ........ BLEED  STATUS ........ >     APU
C3   N43.5     30000     0.780    111     1.05  110  10   0   01   011   0.40     1  ..

     ASN  AHRS   ACYC   ECID    ACW2   ACW3
E1   0234 0023   00409  134076  XXXXX  XXXXX
     REASON: LCN OIL PRESSURE
     PRE EVENT , 1 SECOND INTERVAL

     NA   EGTA   GLA   WB    PT   P2A  LCOT  LCIT  IGV  SCV  LOT  HOT
N1   068  0345   048   0897  37.5 12.4 0069  0032  038  048  110  105 ..
N2   068  0345   048   0897  37.5 12.4 0069  0032  038  048  110  105 ..
N3   068  0345   048   0897  37.5 12.4 0069  0032  038  048  110  105 ..
N4   068  0345   048   0897  37.5 12.4 0069  0032  038  048  110  105 ..
N5   068  0345   048   0897  37.5 12.4 0069  0032  038  048  110  105 ..
N6   068  0345   048   0897  37.5 12.4 0069  0032  038  048  110  105 ..
N7   068  0345   048   0897  37.5 12.4 0069  0032  038  048  110  105 ..
N8   068  0345   048   0897  37.5 12.4 0069  0032  038  048  110  105 ..
N9   068  0345   048   0897  37.5 12.4 0069  0032  038  048  110  105 ..
                                AT   EVENT
N0   068  0345   048   0897  37.5 12.4 0069  0032  038  048  110  105 ..
```

MCDU

THIS PRINT IS PROVIDED AS EXAMPLE

APU SHUTDOWN REPORT <14>

ACMS REPORTS D/O (3)

LOAD REPORT <15>

The Load Report is generated when abnormal load conditions have occurred during flight or landing (hard landing detection or A/C bounce). Vertical acceleration is monitored as a function of flaps extended or flaps retracted condition and the report is triggered if the value is out of tolerance. It records, at one second intervals, A/C aerodynamic parameters set before, at and after a hard landing.

G7508471 - G3NT1T0 - FM31D7000000003

```
                    < FREE PROGRAMMABLE 64 CHARACTERS >
                    < FREE PROGRAMMABLE 64 CHARACTERS >
                          A330  LOAD REPORT  < 15 >
     ACID      DATE      UTC       FROM TO      FLT          CODE     CNT
C1   XXXXXX    98APR07   10.20.05  LFBO EDHI    XXXXXXXXX    4110     010 ..

     PRV   PH    TIEBCK    DMU     IDENTIFICATION        MOD   AP1   AP2
C2   005   06.0  XXXXXX    SXXXX   VXXXXX  CXXXXX        XXX   012   012 ..

     TAT       ALT       MN       SYS     < ....... BLEED  STATUS ....... >     APU
C3   N43.5     30000     0.780    111     1.05  110  10   0   01   011  0.40    1 ..

     VALUES AT MAX EXCEEDANCE
     RALT  CAS  GW      CG    FLAP   SLAT
N1   0124  209  240000  28.3  028.4  023.8 ..
     REASON:  PTCR
              MAX VALUES DURING 1 SEC PRE - AND 1 SEC POST-EVENT
     VRTG   LONG   LATG   ROLL   ROLR   PTCH   PTCR   RALR   LIM1
S0   01.129 03.879 02.210 020.3  032.8  039.4  020.3  006.7  009.372 ..
              MIN VALUES DURING 1 SEC PRE-AND 1 SEC POST-EVENT
S1   01.129 03.879 02.210 020.3  032.8  039.4  020.3  006.7  009.372 ..
                      PRE-EVENT   , 1  SEC INTERVAL
     VRTG   LONG   LATG   ROLL   ROLR   PTCH   PTCR   RALR   RALT
S2   01.129 03.879 02.210 020.3  032.8  039.4  020.3  006.7  0124 ..
                     AT AND POST EVENT , 1 SEC INTERVALS
S3   01.129 03.879 02.210 020.3  032.8  039.4  020.3  006.7  0124 ..
S4   01.129 03.879 02.210 020.3  032.8  039.4  020.3  006.7  0124 ..
              MAX VALUES DURING 1 SEC PRE - AND 1 SEC POST-BOUNCE
     VRTG   LONG   LATG   ROLL   ROLR   PTCH   PTCR   RALR   LIM2
S5   01.129 03.879 02.210 020.3  032.8  039.4  020.3  006.7  009.372 ..
              MIN VALUES DURING 1 SEC PRE - AND 1 SEC POST-BOUNCE
S6   01.129 03.879 02.210 020.3  032.8  039.4  020.3  006.7  009.372 ..
                      PRE-BOUNCE  1  SEC INTERVAL
     VRTG   LONG   LATG   ROLL   ROLR   PTCH   PTCR   RALR   RALT
S7   01.129 03.879 02.210 020.3  032.8  039.4  020.3  006.7  0124 ..
                     AT AND POST BOUNCE , 1 SEC INTERVALS
S8   01.129 03.879 02.210 020.3  032.8  039.4  020.3  006.7  0124 ..
S9   01.129 03.879 02.210 020.3  032.8  039.4  020.3  006.7  0124 ..
```

PTCR = pitch rate limit exceeded

MCDU

These lines are generated if the A / C bounced

THIS PRINT IS PROVIDED AS EXAMPLE

LOAD REPORT <15>

ACMS REPORTS D/O (3)

USER PROGRAMMABLE REPORT <16>, <17>, <18>

The User Programmable Reports are generated when specific conditions programmed by the airline are met. Each data set contains up to 48 parameters chosen by the airline. The report does not exceed 120 data lines. The sampling intervals, the average intervals and the history times of parameters recording are chosen by the airline. These report programming is done through the GSE.

G7508471 - G3NT1T0 - FM31D7000000003

```
                    < FREE PROGRAMMABLE 64 CHARACTERS >
                    < FREE PROGRAMMABLE 64 CHARACTERS >
              A330  PROGRAMMABLE REPORT  < 16 > , < 17 > , < 18 >
     ACID      DATE      UTC       FROM TO      FLT          CODE     CNT
C1   XXXXXX    98APR07   10.20.05  LFBO EDHI    XXXXXXXXX    4110     010 ..

     PRV   PH   TIEBCK   DMU    IDENTIFICATION        MOD   AP1   AP2
C2   005   06.0 XXXXXX   SXXXX  VXXXXX CXXXXX          XXX   012   012 ..

     TAT       ALT       MN       SYS     < ....... BLEED  STATUS ....... >     APU
C3   N43.5     30000     0.780    111     1.05  110  10   0   01   011  0.40    1 ..

     Y1    Y2    Y3    Y4
C4   01.0  00    01    120 ..
      EGT      N2       FF       MN       AOA      LATP     LONP     FQ
C5   116.1    116.1    116.1    006.1    006.1    004.1    004.1    114.1    ..
C6   345.01   344.01   244.01   205.01   221.01   310.00   311.00   074.01   ..
E1   XXXXXX   XXXXXX   XXXXXX   XXXXXX   XXXXXX   XXXXXXX  99000X9  990000X9 ..
      EGT      N2       FF       RALT     ZCB
C7   116.2    116.2    116.1    025.1    026.1    ..
C8   345.10   344.10   244.10   164.01   203.11   ..
N1   XXXXXX   XXXXXX   XXXXXX   XXXXXX   XXXXXX   ..

      EGT      N2       FF
1C   116.2    116.2    116.1    ..
2C   345.10   344.10   244.10   ..
T1   XXXXXX   XXXXXX   XXXXXX   ..
      SLAT     FLAP
5C   018.1    0.18.1   ..
6C   124.01   134.01   ..
X1   XXXXXX   XXXXXX   ..
E2   XXXXXX   XXXXXX   XXXXXX   XXXXXX   XXXXXX   XXXXXX   ..
N2   XXXXXX   XXXXXX   XXXXXX   XXXXXX   XXXXXX   ..
.
V2   XXXXXX   XXXXXX   XXXXXX   XXXXXX   ..
X2   XXXXXX   XXXXXX   ..
.
.
OE   XXXXXX   XXXXXX   XXXXXX   XXXXXX   XXXXXX   XXXXXX   ..
ON   XXXXXX   XXXXXX   XXXXXX   XXXXXX   XXXXXX   ..
.
OV   XXXXXX   XXXXXX   XXXXXX   XXXXXX   ..
OX   XXXXXX   XXXXXX   ..
```

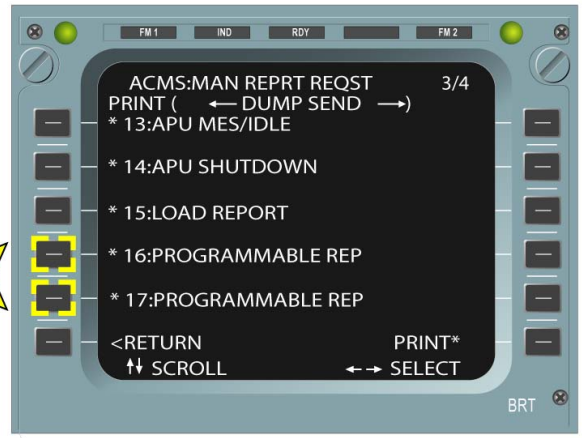

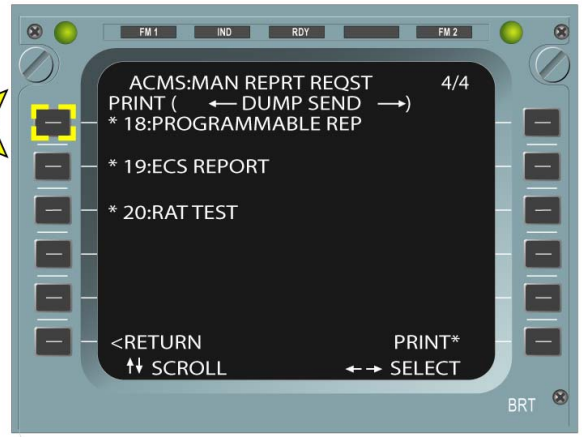

MCDU

THIS PRINT IS PROVIDED AS EXAMPLE

USER PROGRAMMABLE REPORT <16>, <17>, <18>

G7508471 - G3NT1T0 - FM31D700000003

ACMS REPORTS D/O (3)

ENVIRONMENTAL CONTROL SYSTEM REPORT <19>

The ECS Report is generated when there is a malfunction in the air conditioning or pressurization system. It records engine, A/C and environmental data at and before the event with 15 seconds intervals.

G7508471 - G3NT1T0 - FM31D7000000003

```
                    < FREE PROGRAMMABLE 64 CHARACTERS >
                    < FREE PROGRAMMABLE 64 CHARACTERS >
                          A330  ECS REPORT  < 19 >
     ACID      DATE      UTC       FROM TO     FLT          CODE     CNT
C1   XXXXXX    98APR07   10.20.05  LFBO EDHI   XXXXXXXXX    4110     010 ..

     PRV   PH    TIEBCK   DMU     IDENTIFICATION        MOD   AP1   AP2
C2   005   06.0  XXXXXX   SXXXX   VXXXXX  CXXXXX        XXX   012   012 ..

     TAT       ALT       MN       SYS     < ....... BLEED  STATUS ....... >     APU
C3   N43.5     30000     0.780    111     1.05  110  10   0   01   011  0.40    1 ..

     ESN      EHRS   ERT   ECYC   SOURCE    STATUS    CZL       NL    TTE
C5   731203   00134  00216 00079  1111H111111111      11111111  999   99 ..
C6   731232   00317  00431 00223  5HH1H111111111S       ..

     REASON:  EXCESSIVE  CABIN  ALT
                                PRE EVENT
     N1      N2      PS3     T3      TPO     PD      COT     RO   RI   PF    TW
E1   060.29  058.2   223.8   390.3   N039    10.3    100     050  020  0.84  N10 ..
N1   062.40  059.1   224.5   389.2   N020    09.2    090     048  018  0.87  N12 ..
                                                     TP      PTV  FV   ZA    PBV
S1   060.29  058.2   223.8   390.3   N039    10.3    100     050  1    1     0 ..
T1   062.40  059.1   224.5   389.2   N020    09.2    090     048  1    1     1 ..
     ALT     ZCB     PDC     ZLD     VSCB    TAT     SAT     PCW1     PCW2     FOV
V1   30000   11045   03.5    00345   2300    012.4   034.5   XXXXX    XXXXX    060 ..

     V1   V2   V3   V4   V5   V6   V7   ST1   ST2   ST3   ST4   ST5   AOV   CPC
X1   040  038  040  040  038  038  039  19.3  19.3  19.2  19.8  19.4  073   1 ..
                              15 SEC INTERVALS
X2   040  038  040  040  038  038  039  19.3  19.3  19.2  19.8  19.4  073   1 ..
S6   060.29  058.2  223.8  390.3  N039  10.3  100  050  1  1  0 ..
S7   062.40  059.1  224.5  389.2  N020  09.2  090  048  1  1  1 ..
X7   040  038  040  040  038  038  039  19.3  19.3  19.2  19.8  19.4  073   1 ..
.
3X   040  038  040  040  038  038  039  19.3  19.3  19.2  19.8  19.4  073   1 ..
                                AT EVENT
7E   060.29  058.2  223.8  390.3  N039  10.3  100  050  020  0.84  N10 ..
7N   062.40  059.1  224.5  389.2  N020  09.2  090  048  018  0.87  N12 ..
7S   060.29  058.2  223.8  390.3  N039  10.3  100  050  1  1  0 ..
7T   062.40  059.1  224.5  389.2  N020  09.2  090  048  1  1  1 ..
7V   30000  11045  03.5  00345  2300  012.4  034.5  XXXXX  XXXXX  060 ..
7X   040  038  040  040  038  038  039  19.3  19.3  19.2  19.8  19.4  073  1 ..
```

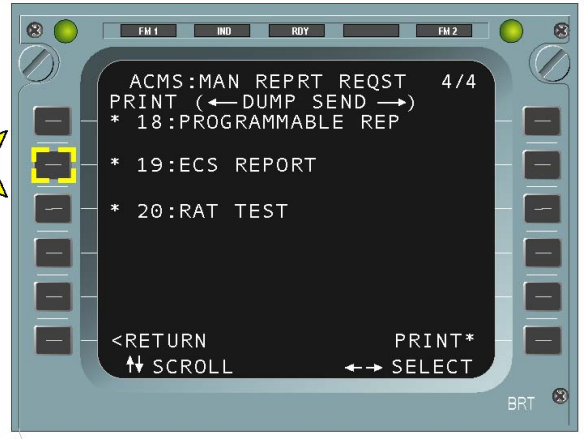

MCDU

T - 15 sec

T = event

THIS PRINT IS PROVIDED AS EXAMPLE

ENVIRONMENTAL CONTROL SYSTEM REPORT <19>

G7508471 - G3NT1T0 - FM31D700000003

ACMS REPORTS D/O (3)

RAM AIR TURBINE TEST REPORT <20>

The Ram Air Turbine Test Report checks the condition of the RAT on ground during test. It records the RAT RPM, the green system pressure, the main landing gear door status and the green electric pump status during one of the three tests and provides their results.
The three tests are:
- Spin up and governing test,
- Pump test,
- Anti stall test.

The RAT Test Report is armed via an MCDU menu.

G7508471 - G3NT1T0 - FM31D7000000003

```
                    < FREE PROGRAMMABLE 64 CHARACTERS >
                    < FREE PROGRAMMABLE 64 CHARACTERS >
                   A330  RAM AIR TURBINE TEST REPORT  < 20 >
     ACID      DATE      UTC        FROM TO      FLT              CODE     CNT
C1   XXXXXX    98APR07   10.20.05   LFBO EDHI    XXXXXXXXX        4110     010 ..

     PRV    PH    TIEBCK    DMU     IDENTIFICATION        MOD    AP1    AP2
C2   005    06.0  XXXXXX    SXXXX   VXXXXX  CXXXXX        XXX    012    012 ..

     TAT       ALT       MN       SYS      < ........ BLEED   STATUS ........ >      APU
C3   N43.5     30000     0.780    111      1.05  110  10   0   01   011   0.40      1  ..

                      PRE EVENT , 1 SEC INTERVAL
     NRAT   HGSP   LGDR   HGEP
N1   3260   1225   1010   1   ..
                      AT AND POST EVENT , 1 SEC INTERVAL

N1   3250   1225   1010   1   ..
N2   3250   1225   1010   1   ..
N3   3250   1225   1010   1   ..
.
.
.
S9   3250   1225   1010   1   ..
0S   3250   1225   1010   1   ..
1S   3250   1225   1010   1   ..
```

TEST CONDITIONS OK
SPIN UP TEST OK

Result of test

MCDU

THIS PRINT IS PROVIDED AS EXAMPLE

RAM AIR TURBINE TEST REPORT <20>

G7508471 - G3NT1T0 - FM31D700000003

ACMS SOURCES D/O (3)

GENERAL

The Data Management Unit (DMU) receives about 12000 parameters from the A/C system computers through ARINC 429 buses. Some spare inputs are provided for other computers if necessary. These computers send some parameters, which can be:
- called-up on the MCDU (basically 300 in clear language),
- recorded by the Smart Access Recorder (SAR) /Wireless Digital ACMS Recorder (WDAR) if installed,
- used to create reports.

The DMU can use the parameters directly or after processing (average, mathematical formulas...). The DMU uses specific data from the following system computers to create specific preprogrammed report contents, which are:
- engine condition and A/C performance monitoring reports,
- Auxiliary Power Unit (APU) condition monitoring report,
- load report,
- Environmental Condition System (ECS) report,
- engine run-up report,
- Ram Air Turbine (RAT) test report and programmable report contents.

All the system parameters can be used for the programmable reports, due to this DMU sends the information to the user components. As all the reports have the Standard Header, the DMU uses data from most of the system computers to create this header.

DMU INPUTS

The DMU receives inputs from the following systems.

EIVMU

The Engine Interface and Vibration Monitoring Unit (EIVMU) parameters are used for all the engine and A/C performance reports, one APU Report ("APU MES/IDLE Report"), and the ECS report.

BMC 1, 2

The Bleed air Monitoring Computer (BMC) parameters are used for some engine and A/C performance reports, and the ECS report.

FCMC 1, 2

The Fuel Control and Monitoring Computer (FCMC) parameters are used for only one of the engine reports and A/C performance reports ("Cruise Performance Report").

ADIRU 1, 2

The Air Data/Inertial Reference Unit (ADIRU) parameters are used for the cruise performance report and two A/C performance reports ("Load Report" and "ECS Report").

CPC 1, 2

The Cabin Pressure Controller (CPC) parameters are only used for the ECS report.

FMGEC 1, 2

The Flight Management Guidance and Envelope Computer (FMGEC) parameters are used for only one of the engine reports ("Cruise Performance Report") and one A/C performance report ("Load Report").

ECB

The Electronic Control Box (ECB) parameters are used for the two APU reports ("APU MES/IDLE Report" and "APU Shutdown Report").

FWC 1, 2

The Flight Warning Computer (FWC) parameters are only used for the load report.

ZC

The Zone Controller (ZC) parameters are only used for the ECS Report.

SDAC 1, 2

Some of the System Data Acquisition Concentrator (SDAC) parameters are used for Engine and A/C performance reports, the two APU reports and the RAT test report. The other parameters are not dedicated to a specific preprogrammed report.

FDIU

The Flight Data Interface Unit (FDIU) part of the Flight Data Interface and Management Unit (FDIMU) sends Digital Flight Data Recorder (DFDR) parameters to the DMU-part of the FDIMU through an ARINC 429 bus so that they can be recorded on the WDAR, if installed.

DMC 1, 2, 3

The Display Management Computer (DMC) parameters are not dedicated to a specific preprogrammed report.

EGPWC

The Enhanced Ground Proximity Warning Computer (EGPWC) parameters are not dedicated to a specific preprogrammed report.

FCU

The Flight Control Unit (FCU) parameters are not dedicated to a specific preprogrammed report.

LGCIU 1, 2

The Landing Gear Control and Interface Unit (LGCIU) parameters are only used for the RAT report.

WBC 1, 2 (OPTION)

The Weight and Balance Computer (WBC) parameters are not dedicated to a specific preprogrammed report.

SFCC 1, 2

The Slat Flap Control Computer (SFCC) parameters are used for only one Engine and A/C performance report ("Cruise Performance Report"), and the load report.

FCDC 1, 2

The Flight Control Data Concentrator (FCDC) parameters are only used for one engine and A/C performance report ("Cruise Performance Report").

OTHER INPUT SOURCES

Some other DMU input sources are the Smoke Detection Control Unit (SDCU), the Multi Mode Receiver (MMR), the Weather Radar (WXR) transceiver, the Integrated Standby Instrument System (ISIS) and the Brake and Steering Control Unit (BSCU).

G7508471 - G3NT1T0 - FM31D900000002

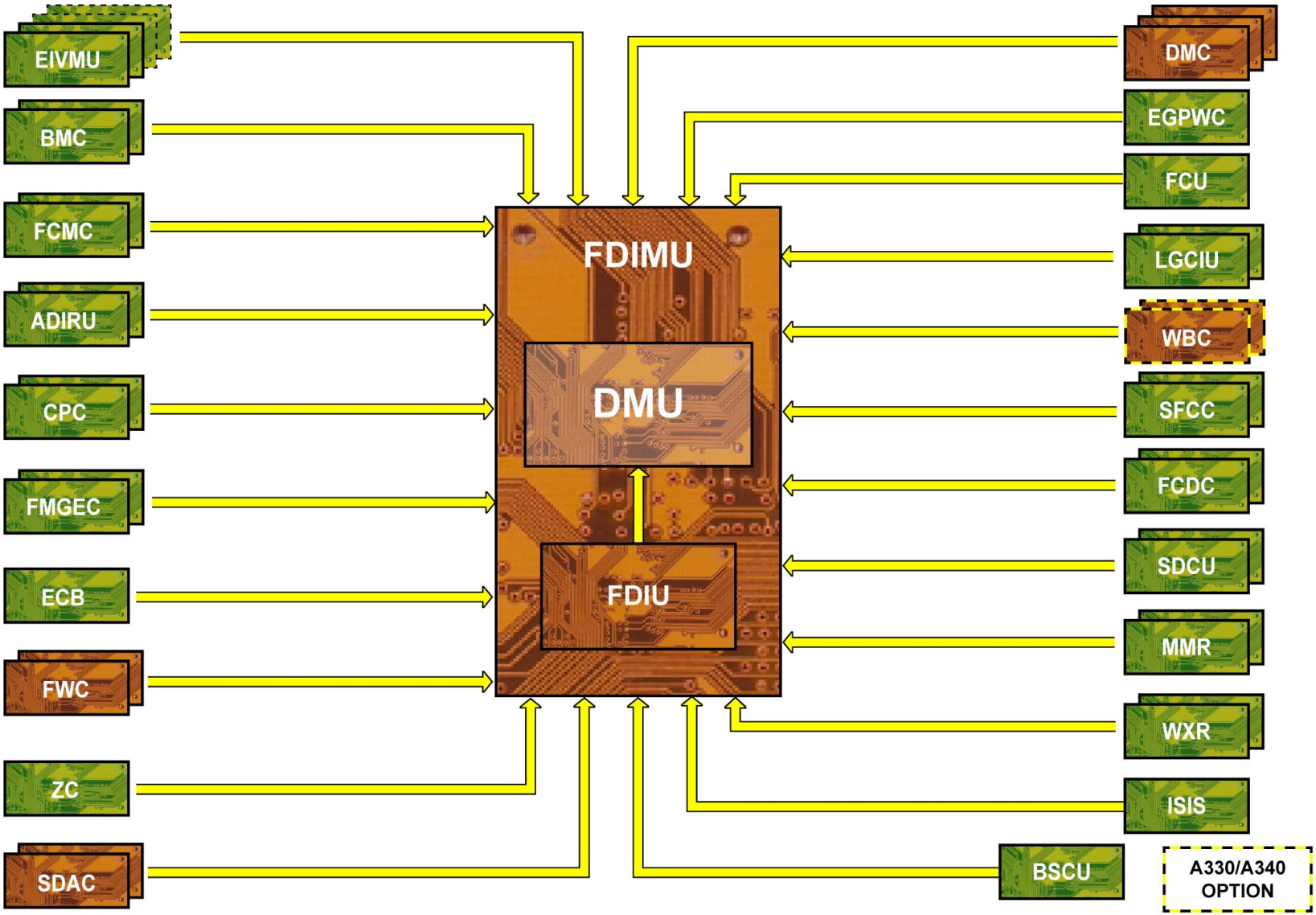

GENERAL & DMU INPUTS

G7508471 - G3NT1T0 - FM31D900000002

This Page Intentionally Left Blank

G7508471 - G3NT1T0 - FM31D900000002

ACMS SOURCES D/O (3)

DMU INTERFACES

The DMU receives and send data to create programmable reports. The interface is made with the following components.

WDAR (OPTION)

The DMU sends the data for recording to the WDAR in Harvard Bi-phase format on one output bus. It also sends some WDAR controls, on discrete outputs, such as WDAR speed select and WDAR run control. The DMU receives some discrete signals from the WDAR for WDAR status.

MDDU

The DMU can download stored Aircraft Condition Monitoring System (ACMS) reports and SAR content to the Multipurpose Disk Drive Unit (MDDU) on an ARINC 429 bus. DMU system software and setup data base can be uploaded from the MDDU on an ARINC 429 bus. The DMU also receives a signal from the MDDU rotary selector on a discrete signal.

ATSU

The DMU can send ACMS reports to the ground station via the Air Traffic Service Unit (ATSU) on an ARINC 429 bus. The DMU receives ACMS report trigger logic from the ground station via the ATSU on an ARINC 429 bus.

CMC 1, 2

The DMU sends fault messages to the Central Maintenance Computers (CMCs) on an ARINC 429 bus. The DMU receives control words and maintenance parameters from the CMC 1 on an ARINC 429 bus.

PRINTER

The DMU sends ACMS print reports to the printer on an ARINC 429 bus. The DMU receives printer status information on an ARINC 429 bus.

MCDU 2, 3

The user dialogue with the DMU is made through the MCDU 2 or 3 via 2 ARINC buses. The MCDU 2 and 3 enable:
- parameter read-out,
- report controls,
- WDAR (if installed)/SAR controls,
- programming.

REMOTE PRINT

The DMU receives the signal from the ACMS PRINT P/B on one discrete input.

G7508471 - G3NT1T0 - FM31D900000002

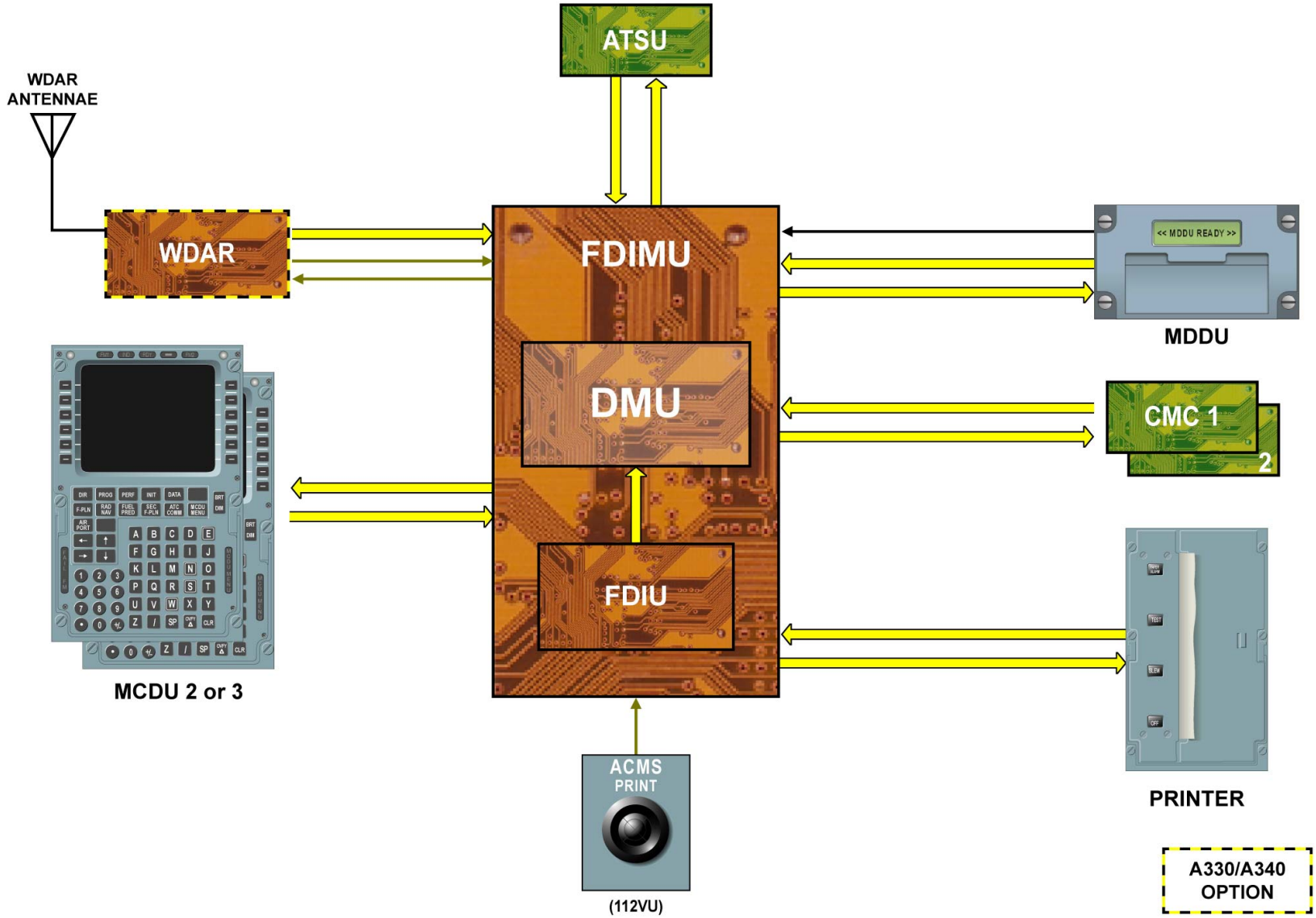

DMU INTERFACES - WDAR (OPTION) ... REMOTE PRINT

RECORDING SYSTEMS BASE MAINTENANCE (3)

AUTO/MAN DUMP PROCEDURE TO DOWNLOAD ACMS DATA FROM THE FDIMU

Note that, to be able to perform the automatic or manual Aircraft Condition Monitoring System (ACMS) reports dump procedure, it is necessary to configure, via the associated Ground Support Equipment (GSE), a 1.44MB formatted 3.5 inch floppy disk in order to dialog with the Flight Data Interface and Management Unit (FDIMU). The configuration file content of each disk defines the type of operation, automatic or manual downloading mode.

AUTOMATIC DUMP PROCEDURE

On the Data Loading Selector (DLS) select the ACMS to enable the downloading operation.
On the side console insert the configured floppy disk into the Multipurpose Disk Drive Unit (MDDU) to activate the communication with the FDIMU, and then, the data transfer.
Monitor data transfer and make a check on completion through the MDDU screen. READY indication is first displayed, then , WAIT RESPONSE, and TRANSF IN PROG . Once the automatic transfer is completed "TRANSF COMPLETE" is shown .
On the Printer, an automatic data dump report prints out with the following indication: ALL FILES SUCCESSFULLY TRANSFERRED.

Automatic/Manual Dump Procedure to download ACMS Data from FDIMU

NOTE: For this procedure use prepared 1.44 MB 3.5" disks.
To prepare the disks, see Software Vendor Documentation.

...
Job set-up
...
Procedure
A. Do the Automatic Dump Procedure

On the Overhead Panel Data Loading Selector 101TD:
- Put the Data Loading Selector to ON,
- Push the NEXT key until the indication "ACMS NOT SELECTED",
- Push the SEL CTL key to take over "ACMS SELECTED" indication

On the side console, on the MDDU:
- Open the floppy disk access door,
- Put the prepared disk into the disk drive.

On the center pedestal, on the Printer:
- An automatic data dump report prints out with the text as follows: ALL FILES SUCCESSFULLY TRANSFERRED.

...
...

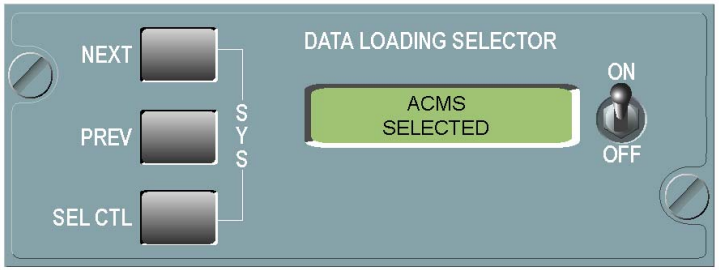

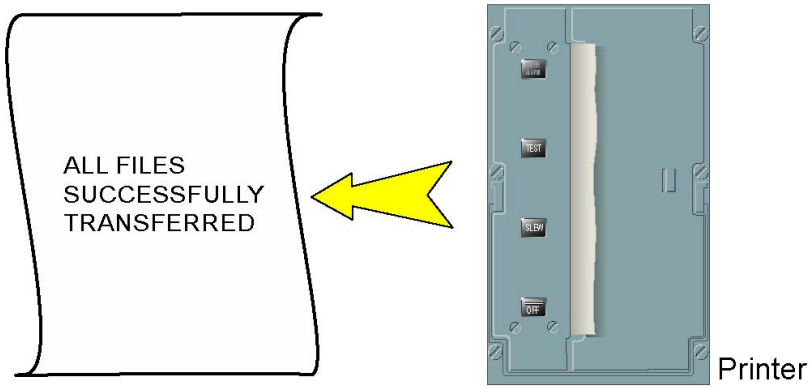

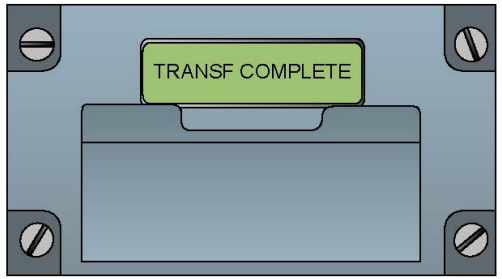

Multipurpose Disk Drive Unit (MDDU)

AUTO/MAN DUMP PROCEDURE TO DOWNLOAD ACMS DATA FROM THE FDIMU - AUTOMATIC DUMP PROCEDURE

RECORDING SYSTEMS BASE MAINTENANCE (3)

AUTO/MAN DUMP PROCEDURE TO DOWNLOAD ACMS DATA FROM THE FDIMU (continued)

MANUAL DUMP PROCEDURE

On DLS select the ACMS to enable the downloading operation.
From the MCDU ACMS menu, select the STORED REPORTS function to display the type of transferable reports. Then, display DUMP indication on the upper left corner to select the downloading mode.
On the side console insert the configured floppy disk into the MDDU to activate the communication with the FDIMU. On the MDDU the READY indication is first displayed, then, WAIT RESPONSE is shown.
From the STORED REPORTS MCDU page, select the desired report to be transferred. During data transfer, the MDDU displays TRANSF IN PROG, and then TRANSF COMPLETE when the transfer is finished.

Automatic/Manual Dump Procedure to download ACMS Data from FDIMU

✓ **NOTE: For this procedure use prepared 1.44 MB 3.5" disks.**
To prepare the disks, see Software Vendor Documentation.

...

✓ **Job set-up**

...

Procedure

✓ **A. Do the Automatic Dump Procedure**

...

B. Do the Manual Dump Procedure

On the Overhead Panel Data Loading Selector 101TD:
✓ - The ACMS SELECTED indication comes into view.

On the MCDU:
✓ - Push the left arrow mode key until DUMP appears on the left.

On the side console, on the MDDU:
✓ - Put the prepared disk into the disk drive.

On the MCDU:
✓ - Push the line key adjacent to the asterisk indication of the related Report Number.

...

✓ **Close-up**

...

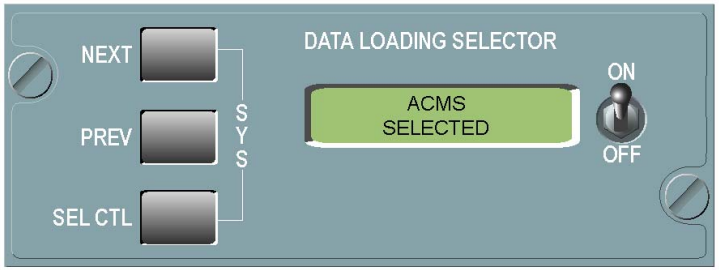

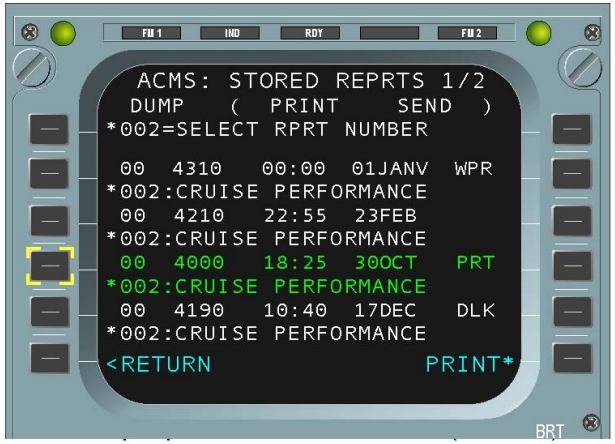

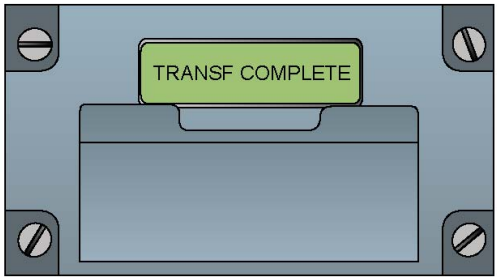

Multipurpose Disk Drive Unit (MDDU)

TASK COMPLETED

AUTO/MAN DUMP PROCEDURE TO DOWNLOAD ACMS DATA FROM THE FDIMU - MANUAL DUMP PROCEDURE

RECORDING SYSTEMS BASE MAINTENANCE (3)

OPERATIONAL TEST OF DFDR PLAYBACK VIA MCDU

From the Cockpit Overhead Panel select the RCDR GND CTL button, in order to energize the Digital Flight Data Recorder (DFDR).
From the MCDU Digital Flight Data Recorder System (DFDRS) menu, select the DFDRS INFORMATION function, and make sure that the status of the DFDR is OK, and that the playback signal is well received.
From the ACMS LABEL CALL-UP page, get access to DFDR/LABEL page. Then, select and check the content and the consistency of the DFDR and PLAYBACK data synchronization of the WORD 001.

NOTE: this check ensures that the information transmitted via the Flight Data Interface Unit (FDIU) part to the DFDR is not lost.

From the Cockpit Overhead Panel deselect the RCDR GND CTL button to shut-off the DFDR.

Operational Test of Digital Flight Data Recorder Playback Via MCDU

...

✓ **Job set-up**

...

Procedure

On the Cockpit Overhead Panel 211VU:
- Push the RCDR GND CTL button.

...

...

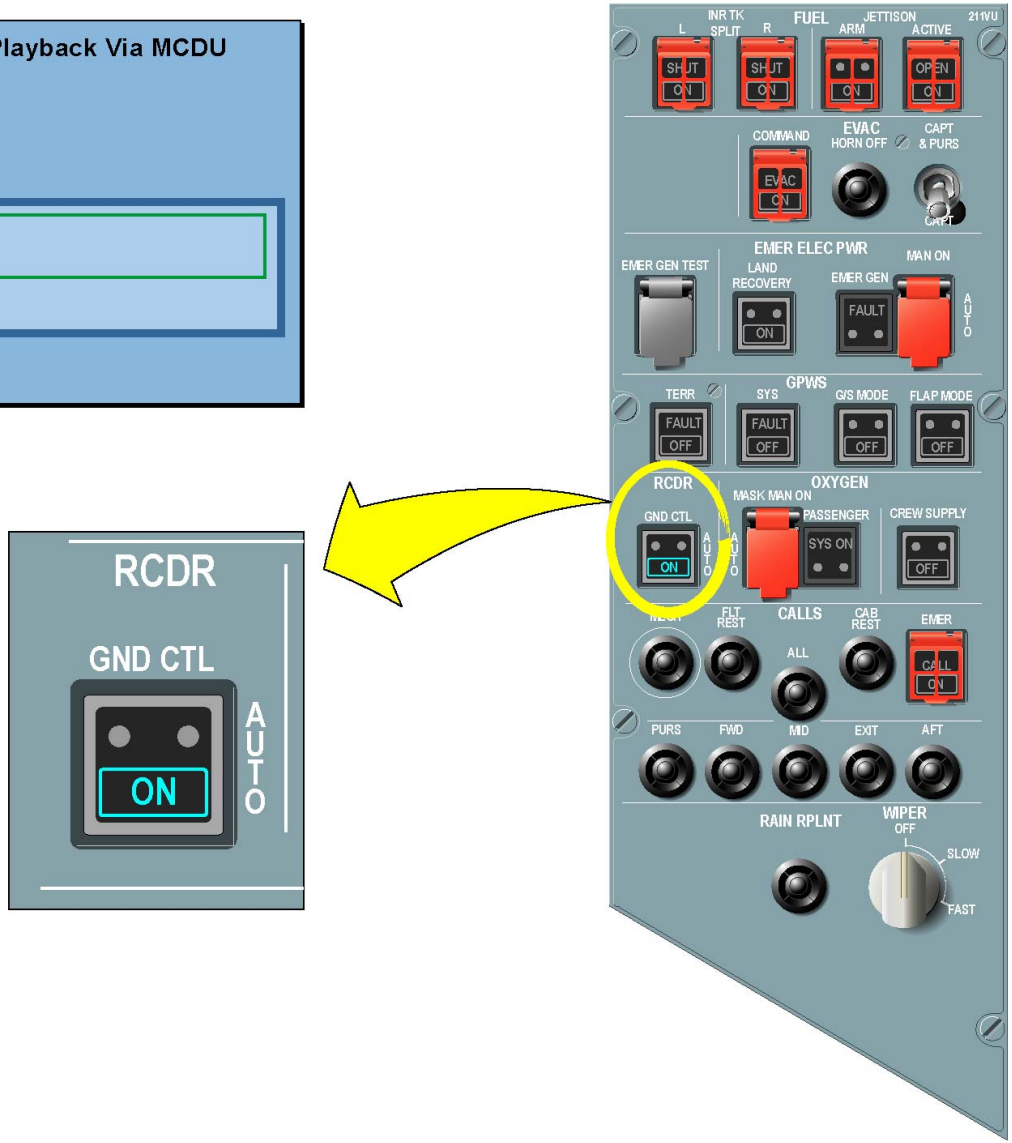

OPERATIONAL TEST OF DFDR PLAYBACK VIA MCDU

Operational Test of Digital Flight Data Recorder Playback Via MCDU

...

✓ **Job set-up**

...

Procedure

✓ **On the Cockpit Overhead Panel 211VU:**
- Push the RCDR GND CTL button.

On the MCDU:

- Push the line key adjacent to DFDRS Information indication (from the DFDRS page).

...

...

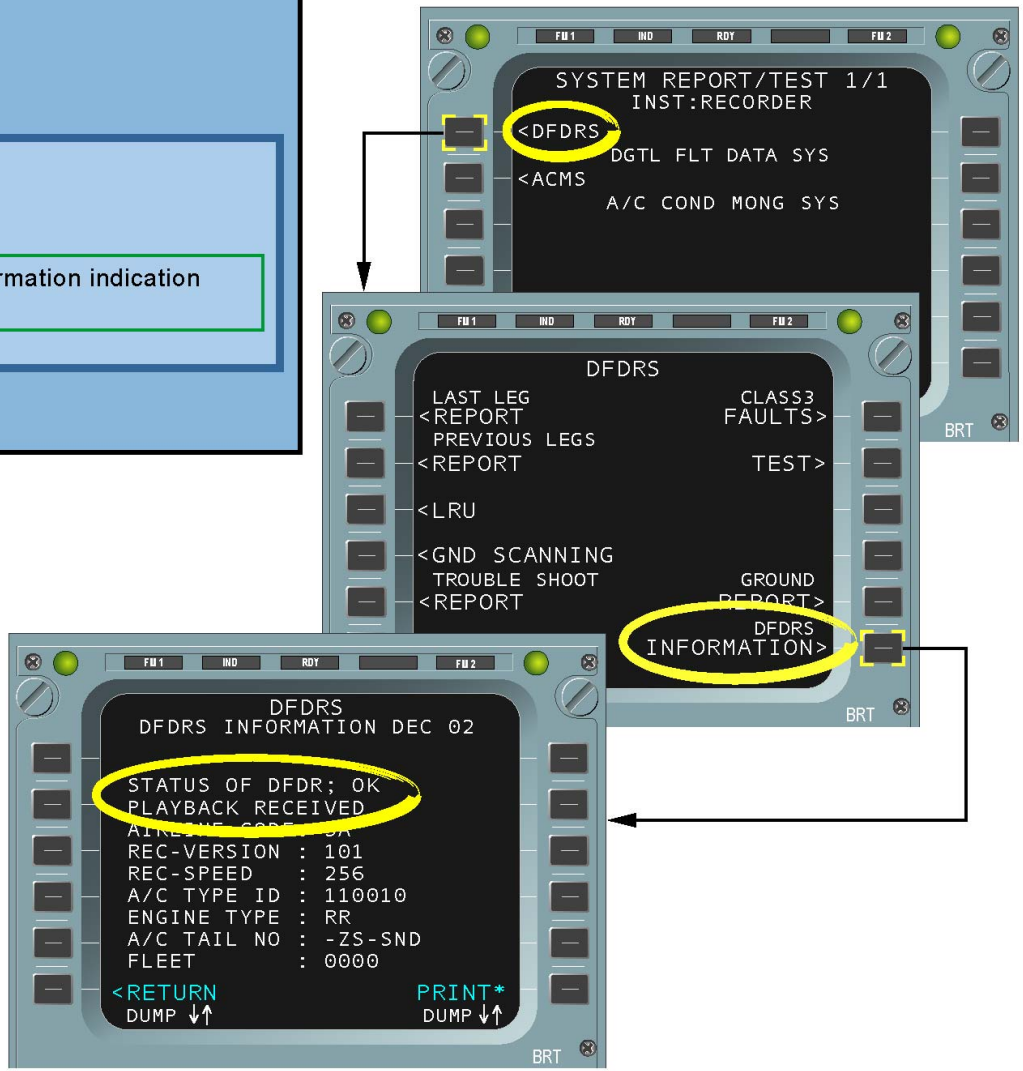

OPERATIONAL TEST OF DFDR PLAYBACK VIA MCDU

Operational Test of Digital Flight Data Recorder Playback Via MCDU

...

✓ **Job set-up**

...

✓ **Procedure**

✓ **On the Cockpit Overhead Panel 211VU:**
- Push the RCDR GND CTL button.

On the MCDU:

✓
- Push the MCDU MENU mode key,
- Push the line key adjacent to ACMS indication,
- Push the line key adjacent to LABEL indication,

✓
- Push the line key adjacent to DFDR/LABEL indication,
- Enter 001 with the alpha-numeric keys into the scratchpad,
- Push the line key 3L to take over parameters in front of the line key 1L.

✓ **Close-up**

...

TASK COMPLETED

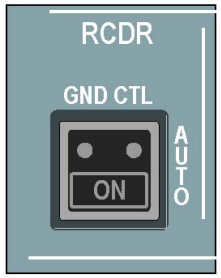

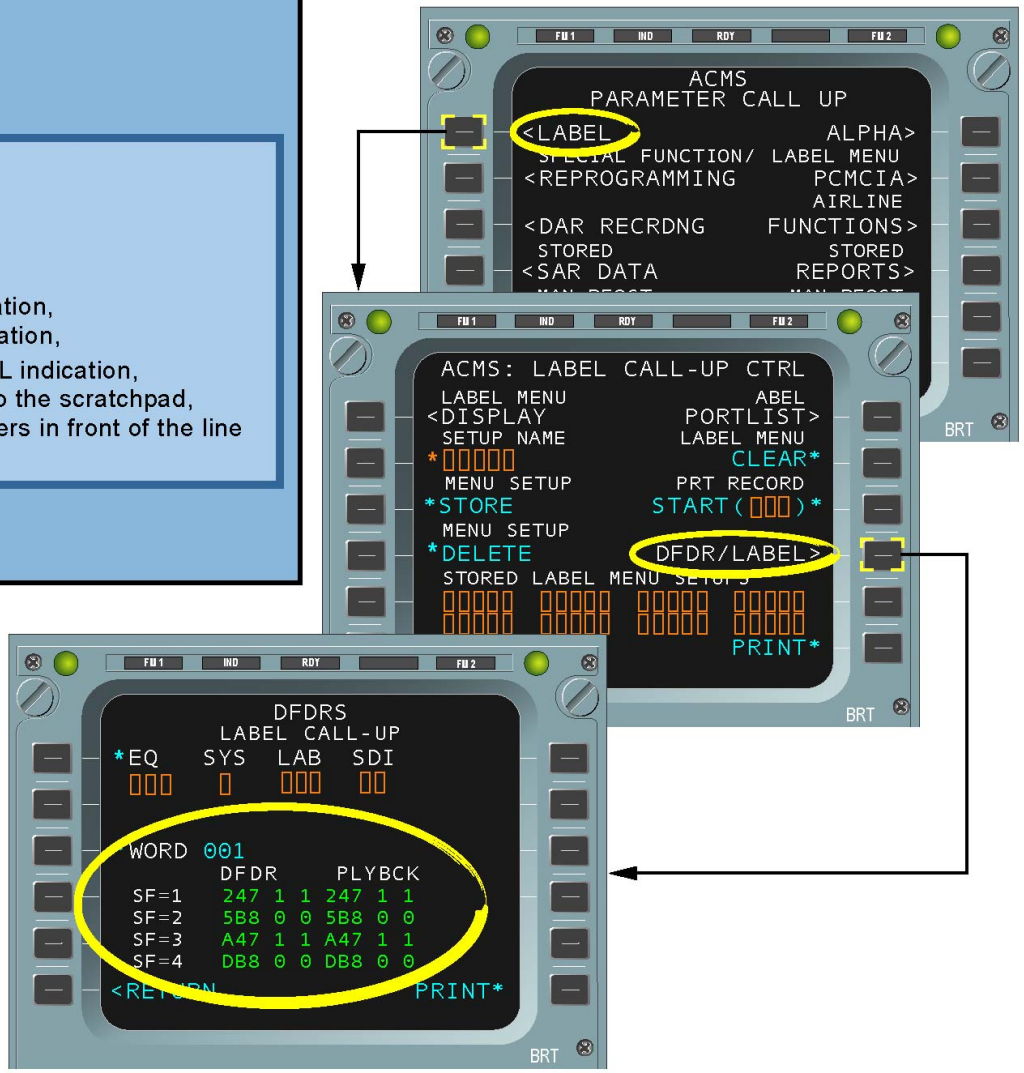

OPERATIONAL TEST OF DFDR PLAYBACK VIA MCDU

AIRBUS S.A.S.
31707 BLAGNAC cedex, FRANCE
STM
REFERENCE G7508471
NOVEMBER 2008
PRINTED IN FRANCE
AIRBUS S.A.S. 2008
ALL RIGHTS RESERVED

AN EADS COMPANY

A330-200/300
TECHNICAL TRAINING MANUAL
MAINTENANCE COURSE - T1 (LVL 2&3) (RR Trent 700)
LANDING GEAR

This document must be used for training purposes only

Under no circumstances should this document be used as a reference

It will not be updated.

All rights reserved
No part of this manual may be reproduced in any form,
by photostat, microfilm, retrieval system, or any other means,
without the prior written permission of AIRBUS S.A.S.

AIRBUS Environmental Recommendation
Please consider your environmental responsability before printing this document.

LANDING GEAR

Landing Gear System Line Maintenance Briefing (2) 2

LANDING GEAR AND DOORS

Landing Gear Special Features (3) 60
Normal Extension and Retraction D/O (3) 76
Free Fall Extension D/O (3) 100
Door Ground Opening D/O (3) 110

WHEELS AND BRAKES

Normal Braking D/O (3) 116
Alternate Braking D/O (3) 130
Park/Ultimate Braking D/O (3) 144
Brake Temperature and Cooling System D/O (3) 150

TIRE PRESSURE

TPIC D/O (3) 154

NOSE WHEEL STEERING

Nose Wheel Steering D/O (3) 156

MAINTENANCE PRACTICE

Landing Gear MCDU Pages (2) 172
Push Back and Towing (2) 176
Landing Gear System Base Maintenance (3) 178

LANDING GEAR SYSTEM LINE MAINTENANCE BRIEFING (2)

SYSTEM OVERVIEW

MAIN LANDING GEAR (MLG)

Each Main Landing Gear (MLG), which retracts inboard into its wheel bay in the fuselage and the wing, includes these main parts:
- a side stay assembly,
- a MLG leg assembly,
- a bogie alignment pitch trimmer,
- a bogie beam assembly.

The MLG is hydraulically operated during the normal extension/retraction sequence.

The MLG leg includes a shortening mechanism, a bogie pitch trimmer and an oleo-pneumatic shock absorber. The shock absorber absorbs the taxi, TO and landing loads. The shock absorber is a capsule type that includes a sliding tube. It is an oleo-pneumatic unit that is installed in the main fitting.

G7508471 - G3NT1T0 - FM32B100000003

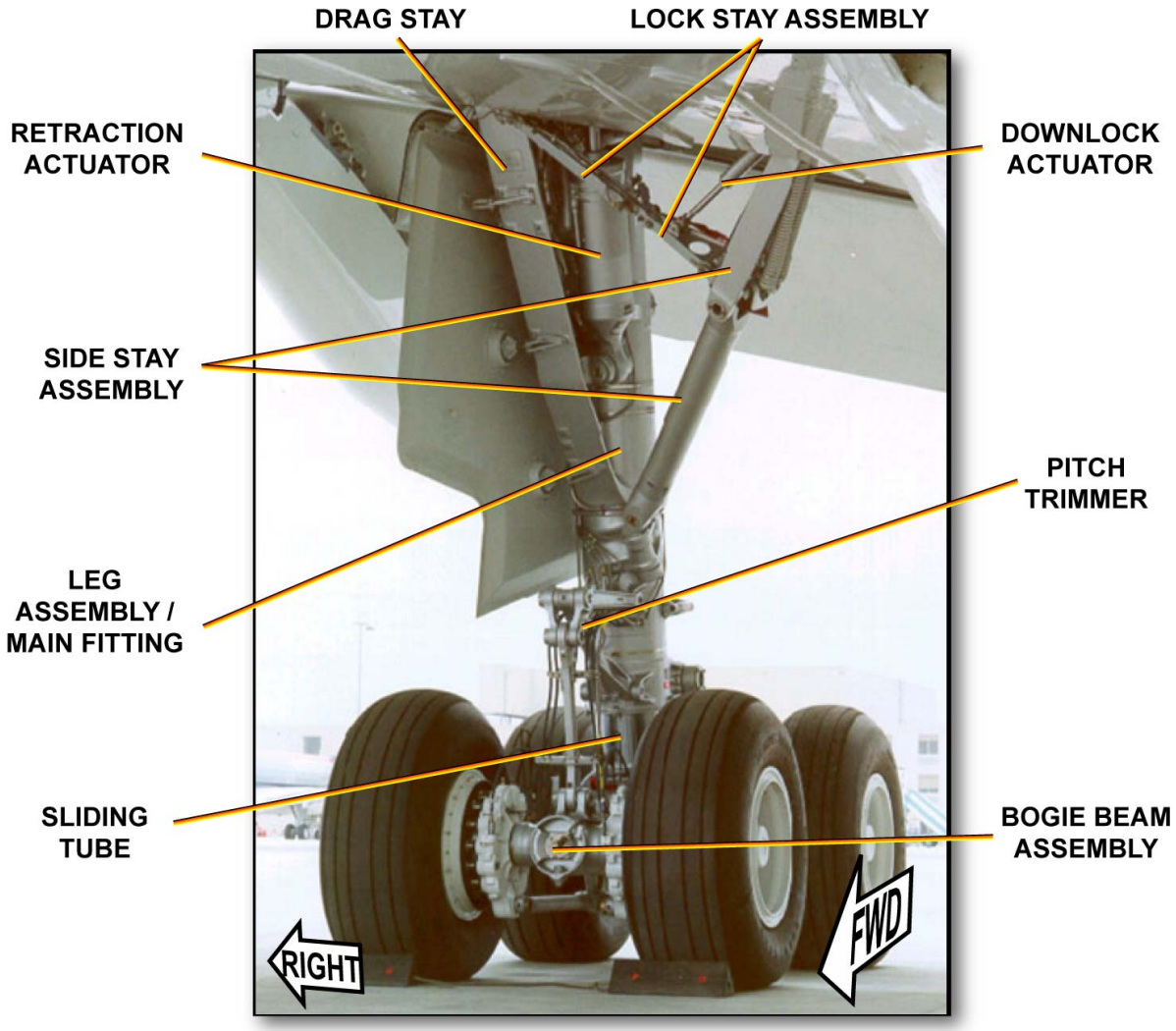

SYSTEM OVERVIEW - MAIN LANDING GEAR (MLG)

G7508471 - G3NT1T0 - FM32B100000003

LANDING GEAR SYSTEM LINE MAINTENANCE BRIEFING (2)

SYSTEM OVERVIEW (continued)

MLG SIDE STAY ASSEMBLY

A two-piece side stay assembly holds the MLG in the extended position. The lock stay is the mechanical down lock for the MLG. A lock stay keeps the side stay assembly stable in the locked down position. The lock stay is the mechanical down lock for the MLG. A ground lock pin has to be installed through the links of the lock stay, when they are in the over center position, to comply with safety precautions.

G7508471 - G3NT1T0 - FM32B100000003

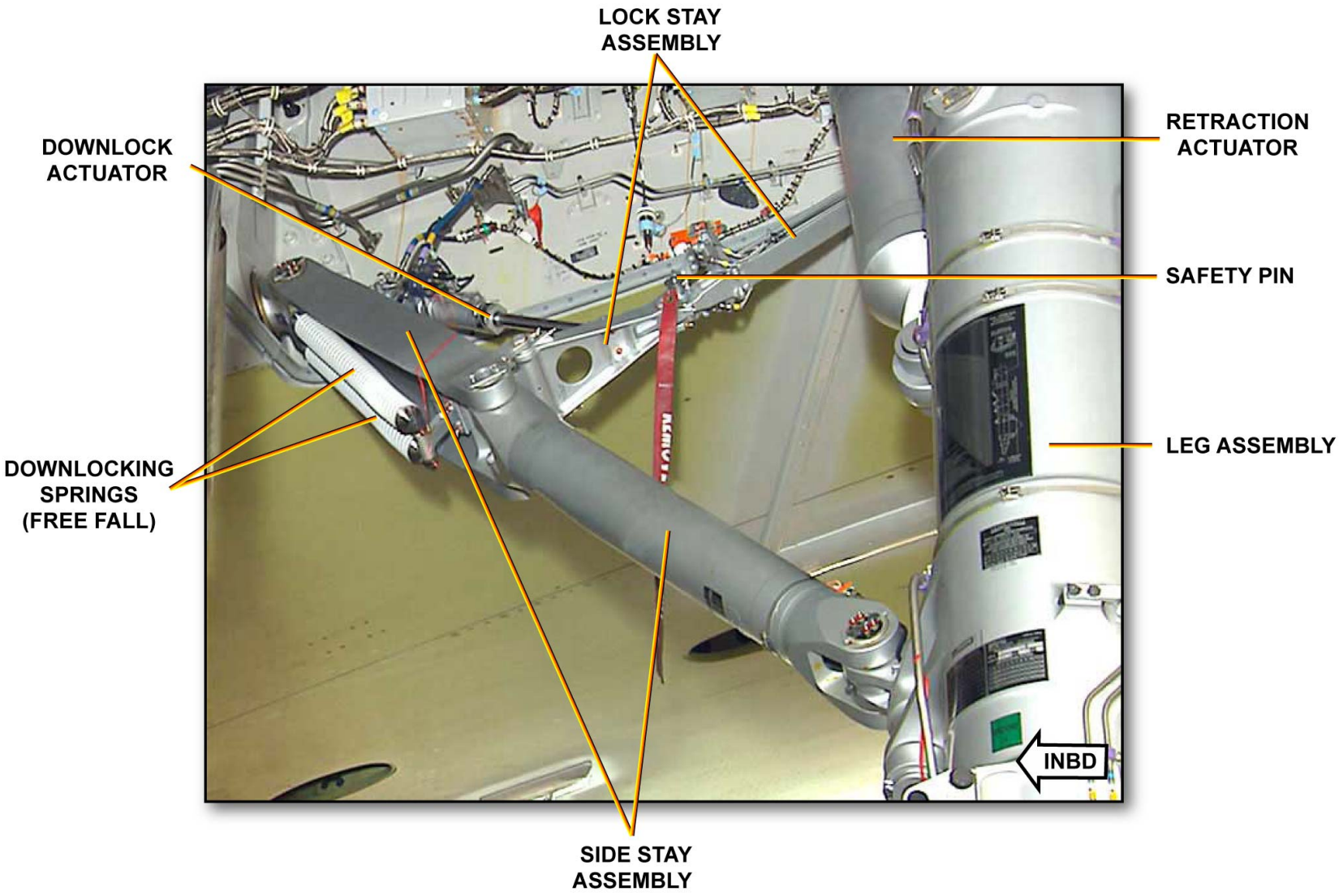

SYSTEM OVERVIEW - MLG SIDE STAY ASSEMBLY

LANDING GEAR SYSTEM LINE MAINTENANCE BRIEFING (2)

SYSTEM OVERVIEW (continued)

MLG BOGIE ALIGNMENT PITCH TRIMMER

The pitch trimmer is installed between the main fitting and the upper links. A set of articulated links, two upper and one lower, connects the main fitting to the front of the bogie beam. The green hydraulic system continuously supplies pressure to the pitch trimmer, which maintains the required geometry of the links during the retraction sequence, TO, and landing phases.

G7508471 - G3NT1T0 - FM32B1000000003

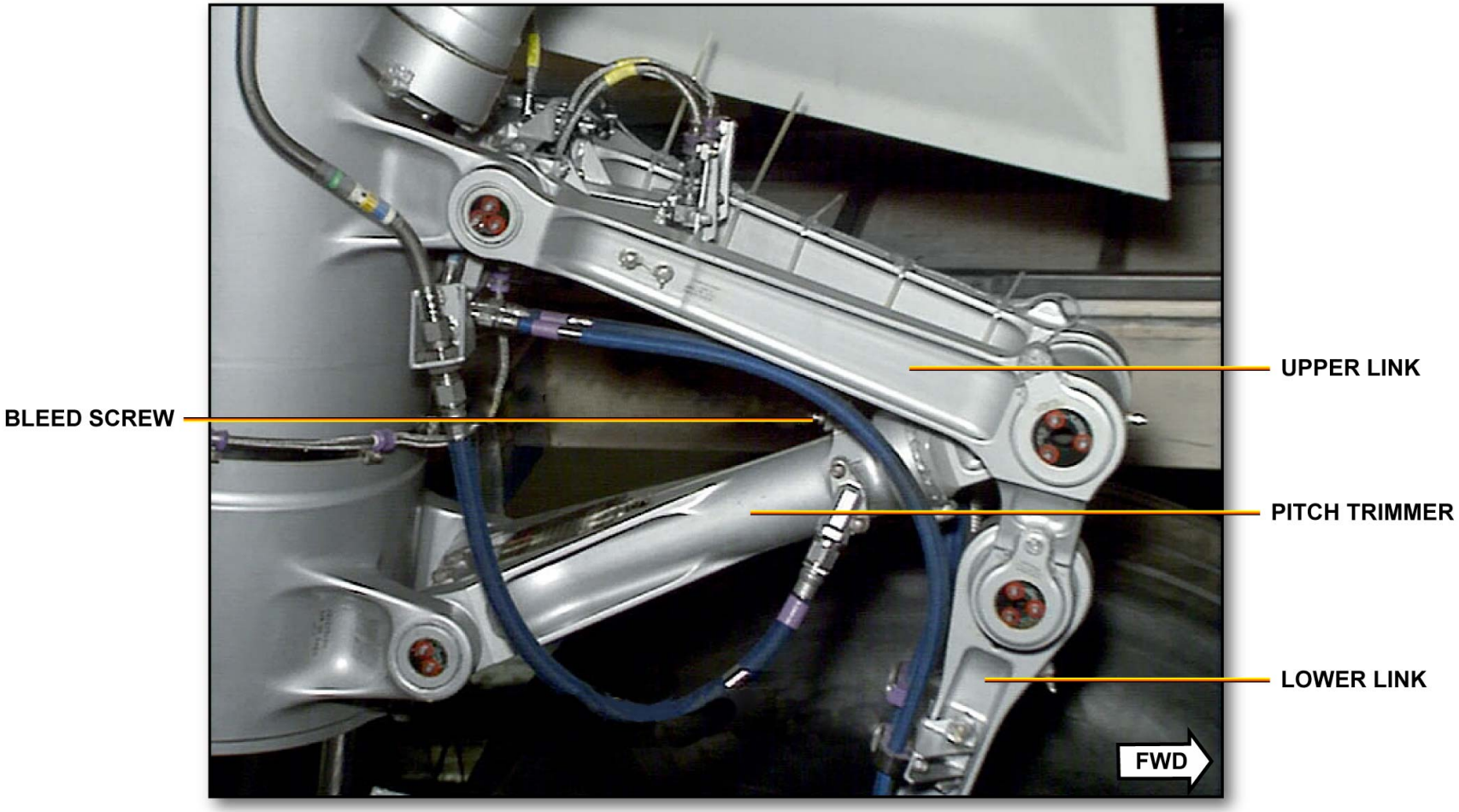

SYSTEM OVERVIEW - MLG BOGIE ALIGNMENT PITCH TRIMMER

G7508471 - G3NT1T0 - FM32B100000003

LANDING GEAR SYSTEM LINE MAINTENANCE BRIEFING (2)

SYSTEM OVERVIEW (continued)

MLG SHORTENING MECHANISM

During the retraction the shortening mechanism decreases the overall length of the MLG to permit the gears to go into the available space in the bays. The shortening mechanism includes a turnbuckle link connected on one end to the airframe wing and a system of mechanical links that is attached to the shock absorber. The MLG movement operates the shortening mechanism during retraction or extension.

G7508471 - G3NT1T0 - FM32B1000000003

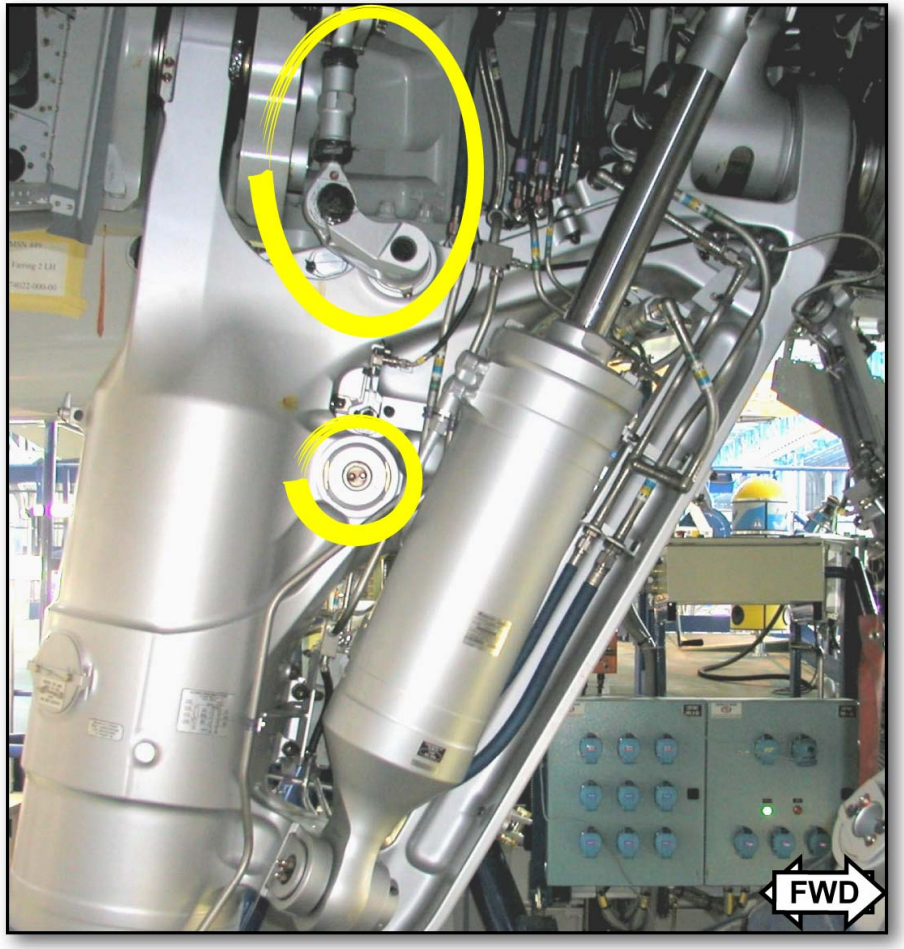

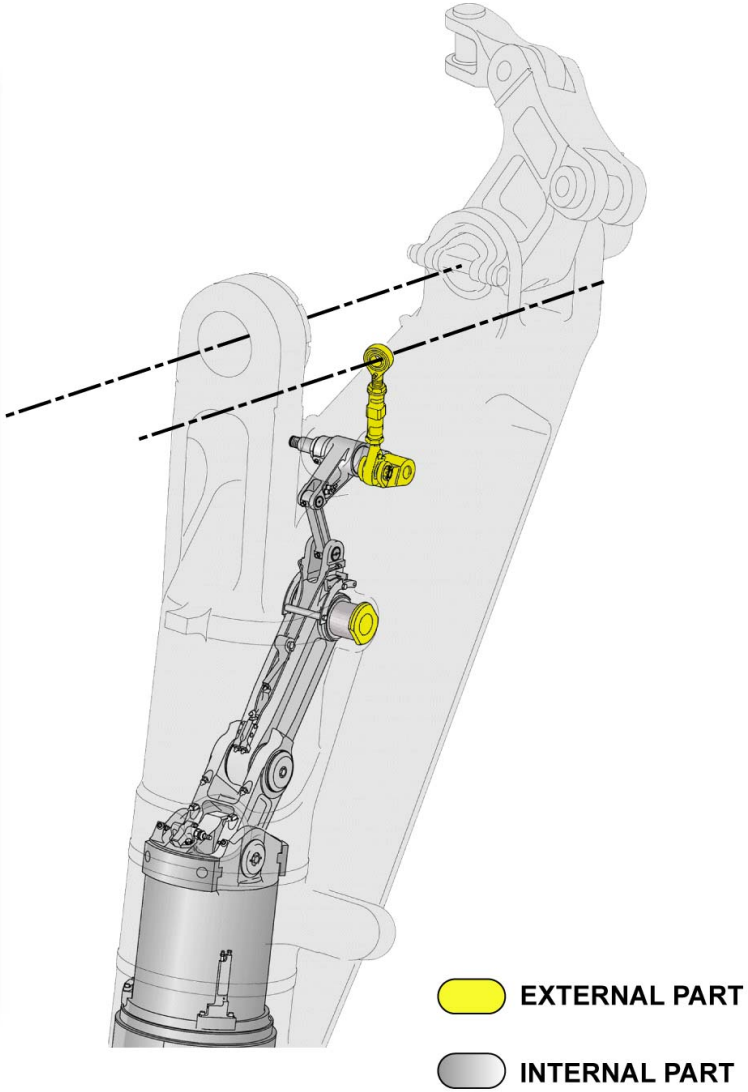

SYSTEM OVERVIEW - MLG SHORTENING MECHANISM

G7508471 - G3NT1T0 - FM32B1000000003

LANDING GEAR SYSTEM LINE MAINTENANCE BRIEFING (2)

SYSTEM OVERVIEW (continued)

MLG DOORS

Three doors close each MLG bay. They follow the shape of the belly fairing and protect the equipment in the bay from the airflow during flight. The MLG doors are hydraulically operated. Each main door is hinged at the keel beam and closes outboard. The fairing door is attached to the MLG leg and operates with it. The hinged door is connected to the MLG leg through an adjustable rod. When the main gear operates, the rod operates to move the hinged door. A lock collar can be installed on each door actuator when the aircraft is on the ground to prevent closure.

G7508471 - G3NT1T0 - FM32B100000003

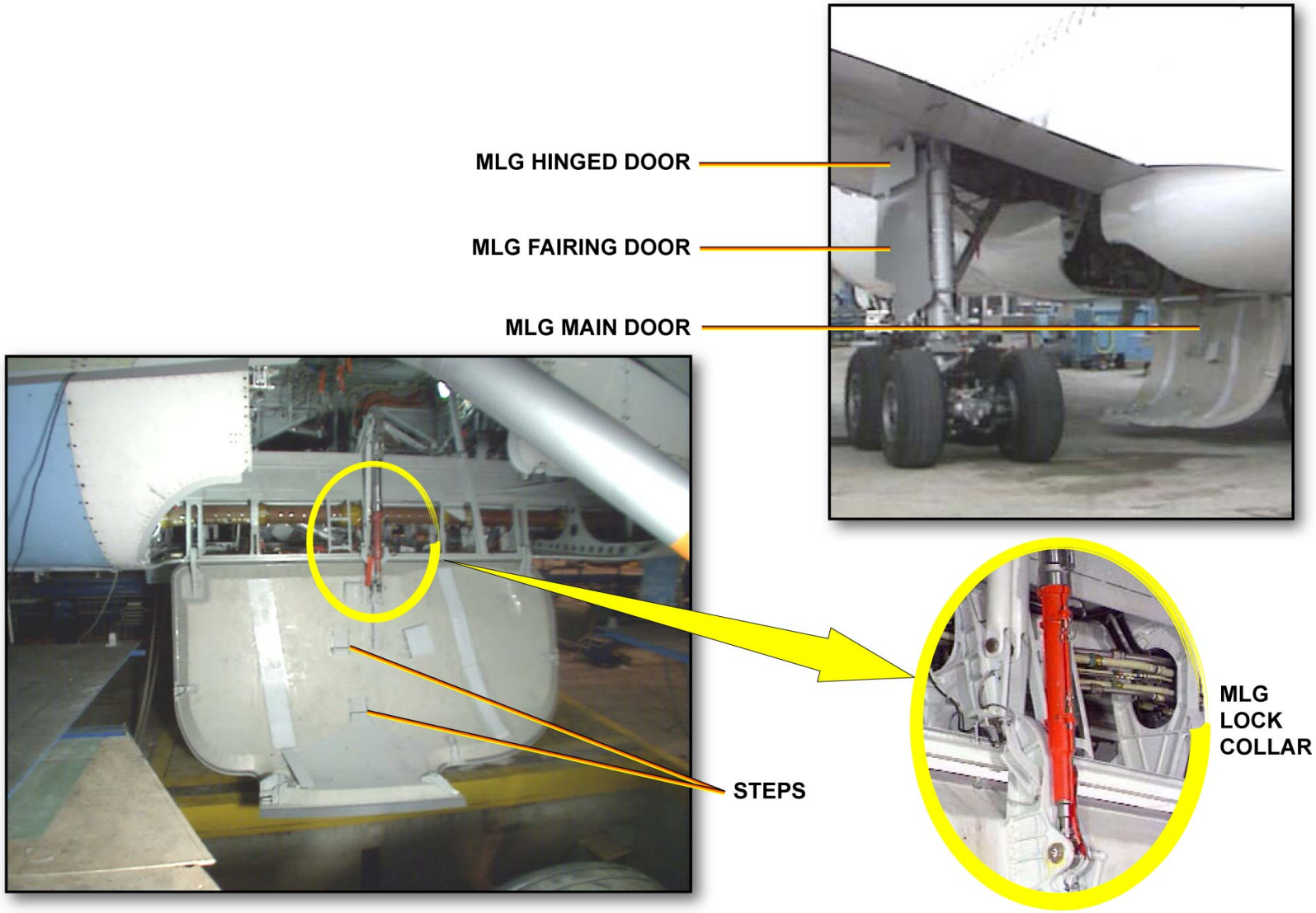

SYSTEM OVERVIEW - MLG DOORS

G7508471 - G3NT1T0 - FM32B100000003

LANDING GEAR SYSTEM LINE MAINTENANCE BRIEFING (2)

SYSTEM OVERVIEW (continued)

NOSE LANDING GEAR (NLG)

Each Nose Landing Gear (NLG), which retracts forward into the NLG bay, includes these main parts:
- a lock stay assembly,
- a NLG leg assembly,
- steering actuators.

The MLG is hydraulically operated during the normal extension/retraction sequence.
The L/G leg has a main fitting with a sliding tube assembly that includes the axle and a shock absorber with a wheel steering assembly.
The nose wheels are steered by twin, double acting hydraulic actuators, which pivot on attachments on the main fitting.

G7508471 - G3NT1T0 - FM32B100000003

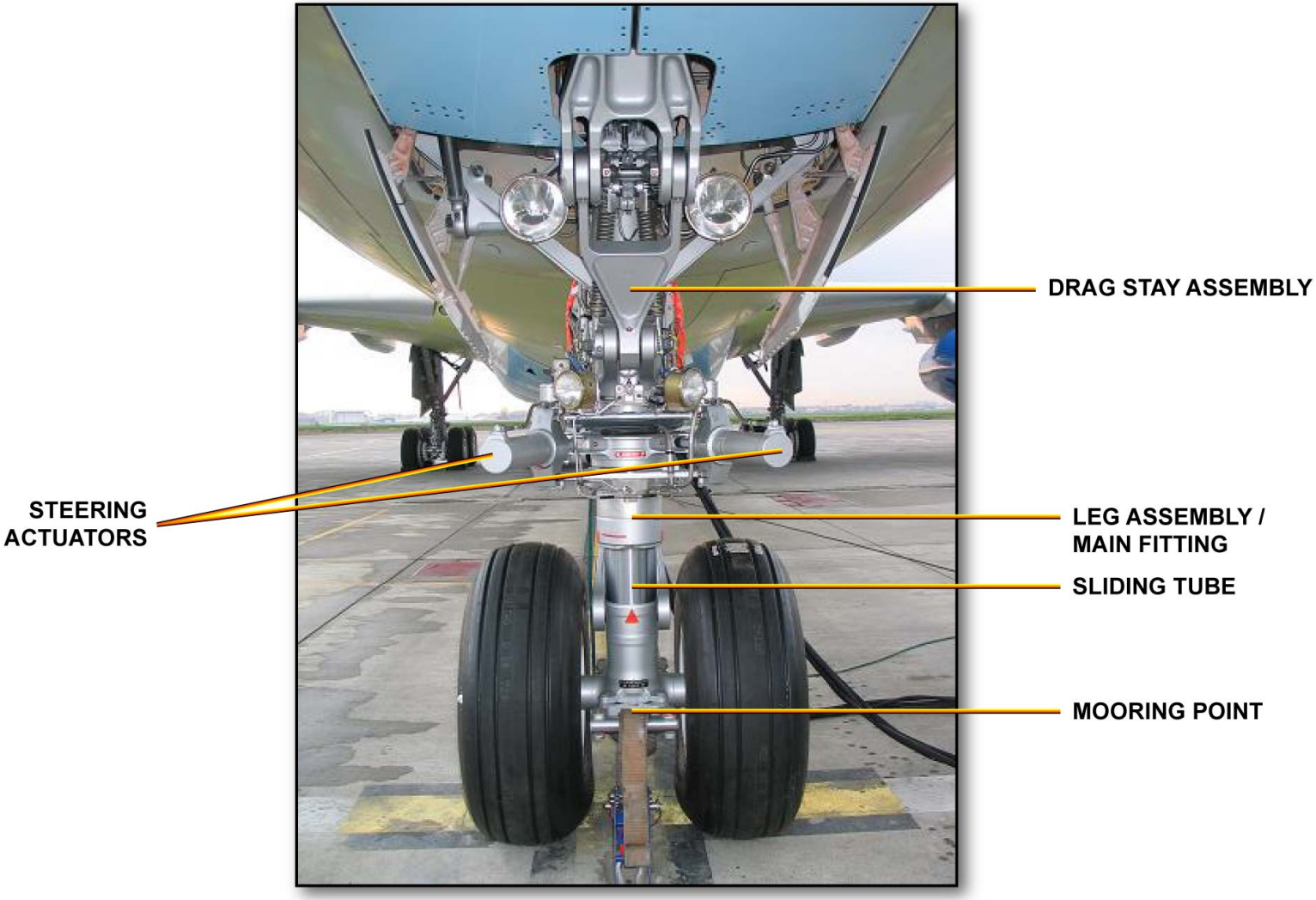

SYSTEM OVERVIEW - NOSE LANDING GEAR (NLG)

G7508471 - G3NT1T0 - FM32B100000003

LANDING GEAR SYSTEM LINE MAINTENANCE BRIEFING (2)

SYSTEM OVERVIEW (continued)

NLG LOCK STAY ASSEMBLY

The lock stay is installed between the main fitting and the center pivot point of the drag stay. It has an upper link and a lower link. The lock stay holds the drag stay in a straight configuration when the NLG is extended. A ground lock pin can be installed in the center pivot point of the lock stay when the NLG is down locked.

G7508471 - G3NT1T0 - FM32B100000003

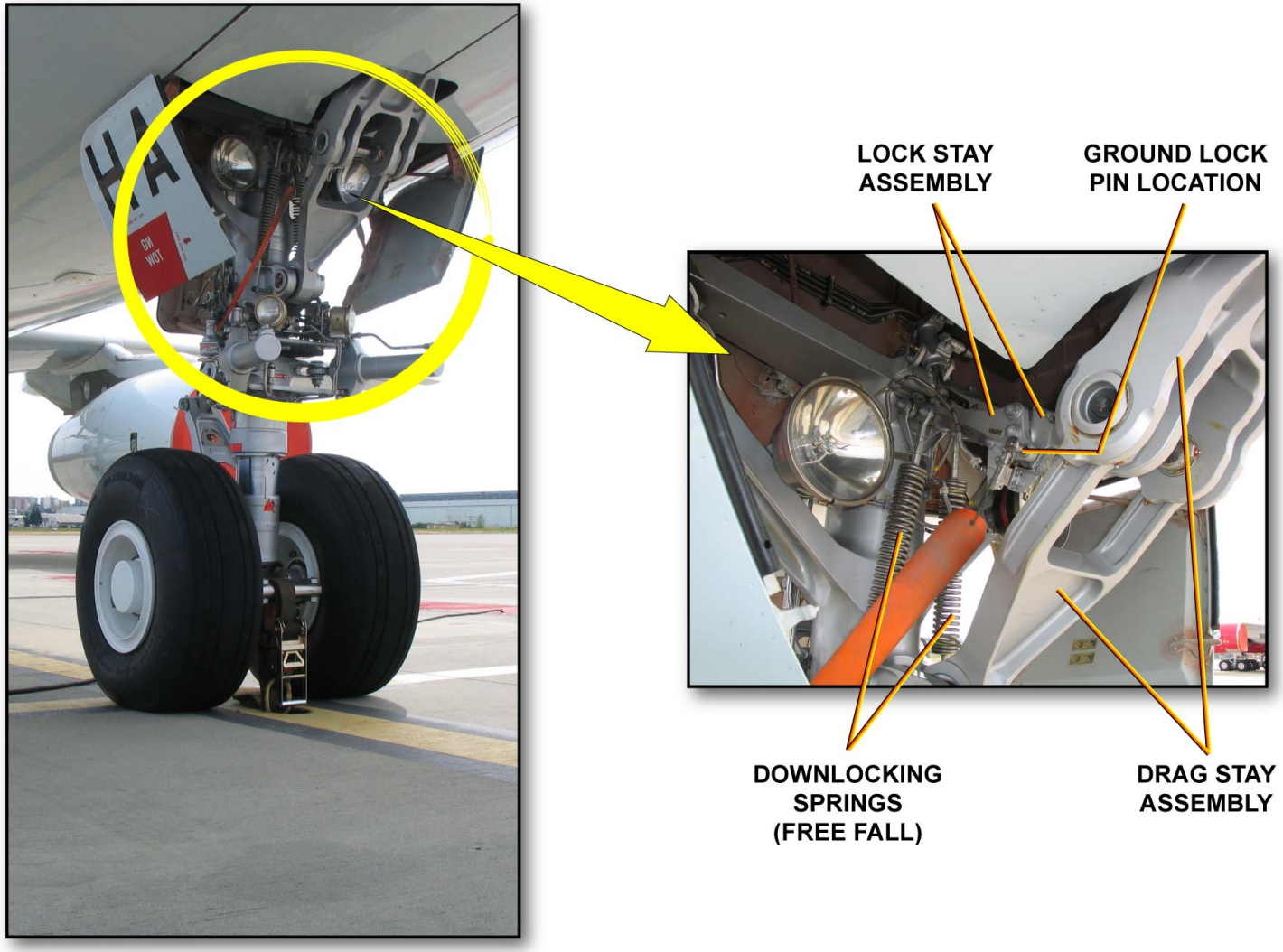

SYSTEM OVERVIEW - NLG LOCK STAY ASSEMBLY

LANDING GEAR SYSTEM LINE MAINTENANCE BRIEFING (2)

SYSTEM OVERVIEW (continued)

NLG DOORS

A lock collar can be installed on each door actuator when the aircraft is on the ground to prevent closure. Four doors and a fixed fairing close the NLG bay. The two forward doors are hydraulically operated. Each door has hinges at the side of the NLG bay and closes inward at the front of the bay. The two aft doors and the fixed fairing are mechanically operated. Each aft door has hinges at its outer edge. Adjustable rods connect the rear doors to the NLG leg. The fixed fairing is installed at the rear of the NLG leg.

G7508471 - G3NT1T0 - FM32B1000000003

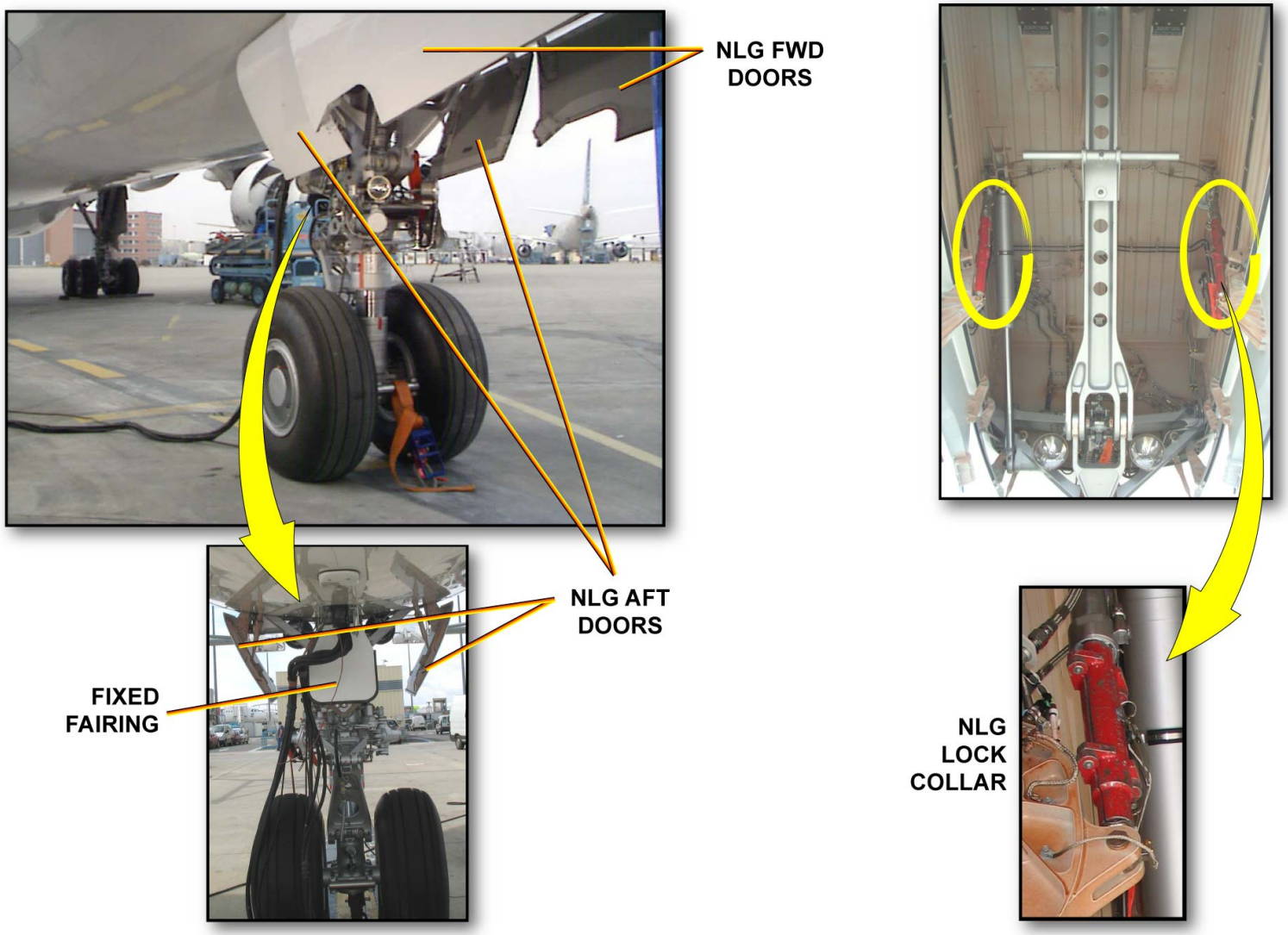

SYSTEM OVERVIEW - NLG DOORS

LANDING GEAR SYSTEM LINE MAINTENANCE BRIEFING (2)

SYSTEM OVERVIEW (continued)

NORMAL BRAKING MANUAL MODE

In manual mode, the aircraft on ground, with the braking pedals operating, the related braking inputs are sent to the Braking and Steering Control Unit (BSCU), which energizes the normal selector valve to connect the green hydraulic power to the system. A pressure switch measures the HYDraulic pressure in the system and supplies the data to the BSCU. The automatic selector, operated by the hydraulic pressure, lets the green system supply the normal brakes and cuts the blue HYD pressure. When both hydraulic systems are available, by its internal design, the automatic selector gives priority to the green system. The servo valve, controlled by the BSCU, modulates the HYD pressure sent to the brakes according to the pedals demand and the Anti-Skid (A/SKID) protection. Wheel rotation speed and braking pressure values are fed back to the BSCU for braking and A/SKID computation. The BSCU sends data to the WHEEL page.

G7508471 - G3NT1T0 - FM32B100000003

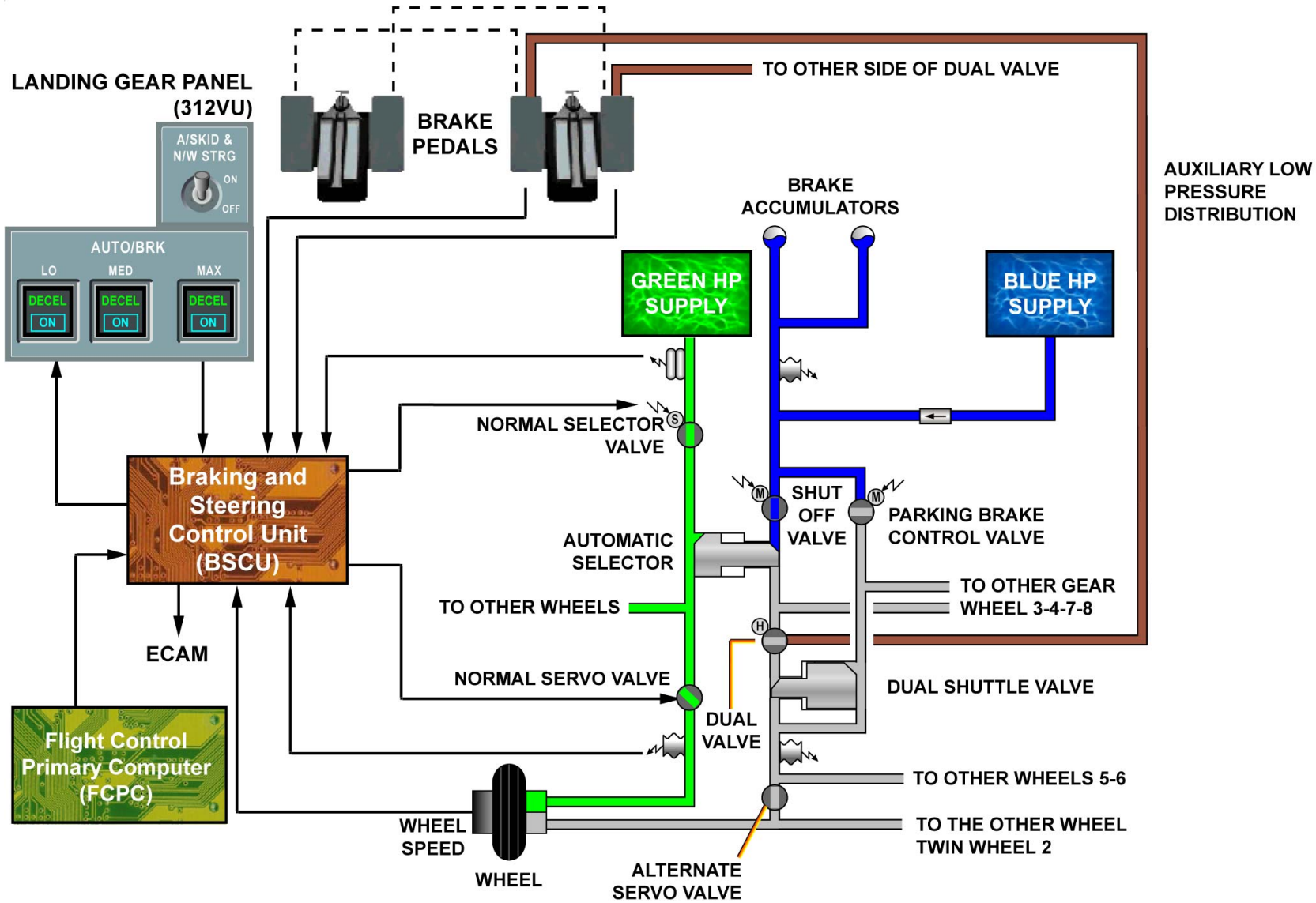

SYSTEM OVERVIEW - NORMAL BRAKING MANUAL MODE

G7508471 - G3NT1T0 - FM32B100000003

LANDING GEAR SYSTEM LINE MAINTENANCE BRIEFING (2)

SYSTEM OVERVIEW (continued)

ALTERNATE BRAKING

The alternate braking system is a hydro mechanical braking system. It is manually operated to decrease the speed of the aircraft when it moves on the ground. The alternate braking system automatically takes over if a failure occurs in the normal braking system or in case of green hydraulic system low pressure. It can operate with A/SKID or without A/SKID. The alternate braking system is controlled by the auxiliary low-pressure distribution and hydraulically operated by the blue hydraulic power.

G7508471 - G3NT1T0 - FM32B100000003

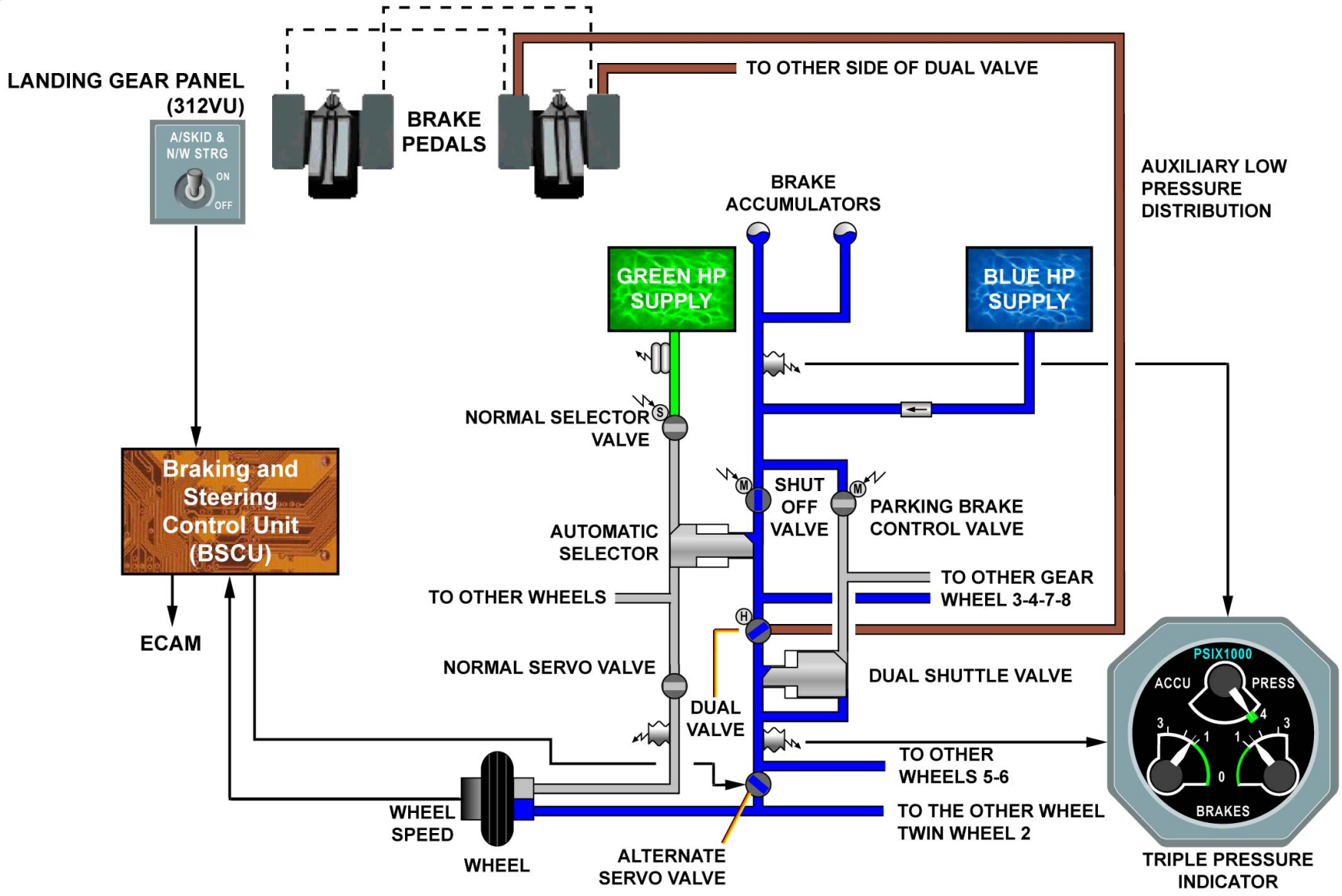

SYSTEM OVERVIEW - ALTERNATE BRAKING

G7508471 - G3NT1T0 - FM32B100000003

LANDING GEAR SYSTEM LINE MAINTENANCE BRIEFING (2)

SYSTEM OVERVIEW (continued)

PARKING/ULTIMATE EMERGENCY BRAKING

The parking/ultimate emergency braking system is an electro-hydraulic system. Its function is to prevent movement of the aircraft when it is parked. This system is electrically controlled and hydraulically operated by the blue hydraulic power or by the blue pressure brake accumulators. The parking/ultimate emergency braking system can also be used in an emergency braking mode to stop the aircraft when no other braking mode is available. When the PARKing BRaKe handle is set to ON, the parking brake control valve is activated and connects the blue pressure to the system. The dual shuttle valve, operated by the hydraulic pressure, connects the blue pressure to the fully opened servo valves and closes the supply downstream of the dual valve to isolate the brake pedals. The park brake control valve sends a signal to the BSCU to isolate the other braking systems. When the PARK BRK handle is set to OFF, the parking brake control valve cuts the blue pressure and the dual shuttle valve re-opens the hydraulic supply from the dual valve. The triple pressure indicator shows the available pressure from the brake accumulators. It also shows the pressure applied on the MLG brakes. This pressure is limited by the system to 2.580 psi. The accumulators have sufficient capacity to hold the brakes on for a minimum time of twelve hours.

G7508471 - G3NT1T0 - FM32B1000000003

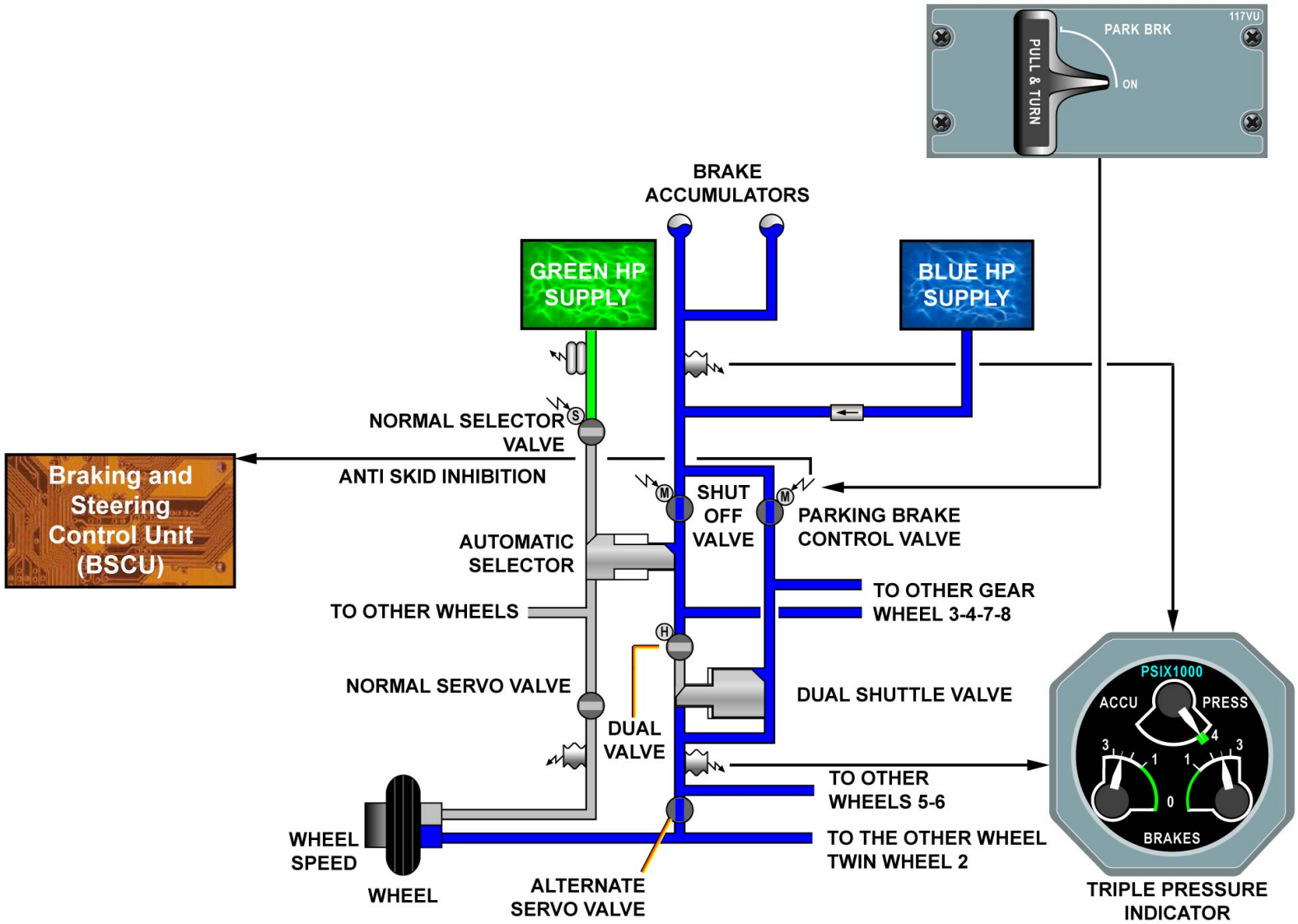

SYSTEM OVERVIEW - PARKING/ULTIMATE EMERGENCY BRAKING

G7508471 - G3NT1T0 - FM32B100000003

LANDING GEAR SYSTEM LINE MAINTENANCE BRIEFING (2)

SYSTEM OVERVIEW (continued)

SAFETY PRECAUTIONS

When working on the L/G system, you must obey all the AMM safety procedures. This will prevent injury to persons and/or damage to the aircraft. The main safety precautions relative to the L/G system are:
- make sure that all circuits are isolated during any maintenance task. Unwanted electrical or hydraulic power can be dangerous,
- make sure that the travel ranges of the L/G and doors are clear. Movement of the L/G and doors can cause injury and/or damage,
- make sure that the wheel chocks are in position and the L/G ground safety locks are installed. This prevents unwanted movement of the aircraft or L/G,
- let the brakes and the wheels become cool before going near the L/G. Do not apply a liquid or gas fire extinguisher directly on a hot wheel or brake unit. This could cause an explosion,
- deflate the tire before removing the wheel. This prevents a possible explosion,
- before removal or installation of a component, make sure that a man can hold it because some components are heavy. If one falls, it can cause injury to persons and damage to equipment,
- during L/G servicing, do not let high pressure gas get in contact with the skin. Gas bubbles in the blood can kill a person,
- during work near the wheel brakes, use safety glasses and a mask. Carbon brake dust can cause irritation to the eyes or lungs.

G7508471 - G3NT1T0 - FM32B100000003

SYSTEM OVERVIEW - SAFETY PRECAUTIONS

LANDING GEAR SYSTEM LINE MAINTENANCE BRIEFING (2)

MAINTENANCE

INSTALLATION OF THE SAFETY DEVICES ON THE L/G

WARNING: INSTALL ALL SAFETY DEVICES AND WARNING NOTICES BEFORE STARTING ANY MAINTENANCE TASK ON OR NEAR THE L/G, THE L/G DOORS, OR THE FLIGHT CONTROLS. USE SOLVENTS AND CLEANING AGENTS IN WELL-VENTILATED AREAS. MAKE SURE THAT THE WHEEL CHOCKS ARE IN POSITION, MOVEMENTS OF THE A/C COULD BE DANGEROUS.

Install the ground safety lock pins in order to secure the down lock mechanisms. If no other hydraulic servicing tasks have to be completed, the area can be closed. All tools, test and support used during this procedure have to be removed.

G7508471 - G3NT1T0 - FM32B100000003

Warnings and Safety precautions.

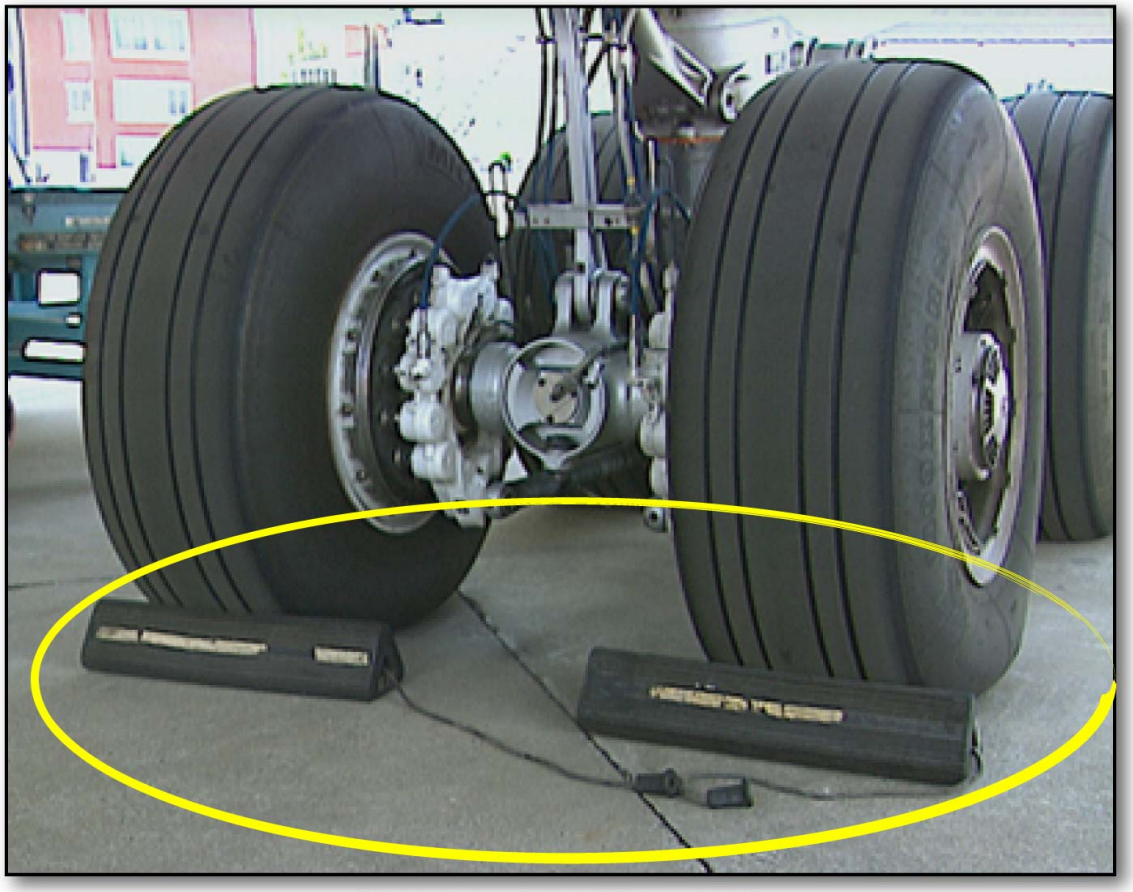

WHEEL CHOCKS (INSTALLED)

MAINTENANCE - INSTALLATION OF THE SAFETY DEVICES ON THE L/G

Installation of the safety devices:

Install the ground safety lock pins in order to secure the down lock mechanisms.

NOSE LANDING GEAR

DOWN LOCK MECHANISM

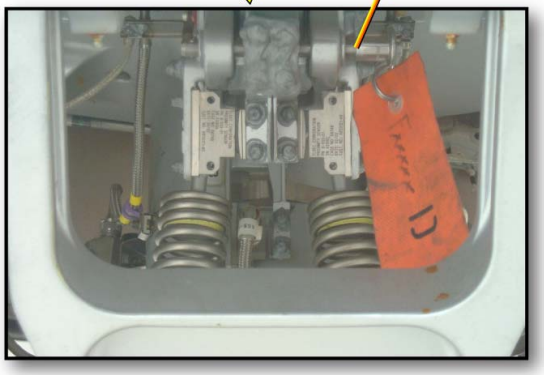

DOWN LOCK MECHANISM

MAIN LANDING GEAR

MAINTENANCE - INSTALLATION OF THE SAFETY DEVICES ON THE L/G

This Page Intentionally Left Blank

G7508471 - G3NT1T0 - FM32B1000000003

LANDING GEAR SYSTEM LINE MAINTENANCE BRIEFING (2)

MAINTENANCE (continued)

INSTALLATION OF THE SAFETY DEVICES ON THE L/G DOORS

After door ground opening and before starting maintenance tasks inside the L/G bay, the doors must be secured by fitting safety sleeves on the door actuators. Different safety precautions have to be carried out.

The doors are secured by installing the safety collar on each hydraulic actuator. If no other hydraulic servicing tasks have to be completed, the area can be closed. All tools, test and support used during this procedure have to be removed.

G7508471 - G3NT1T0 - FM32B1000000003

Safety precautions.

1 L/G LEVER (DOWN POSITION)

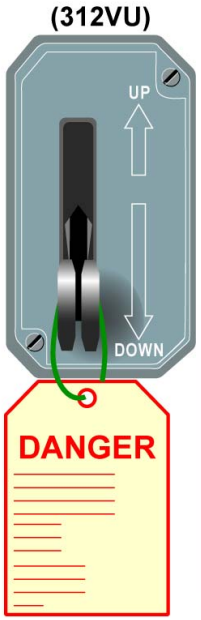

2 LDG GEAR GRVTY EXTN SWITCH (OFF POSITION)

4 WHEEL CHOCKS (INSTALLED)

3 GREEN HYD. SYSTEM (DEPRESSURIZED)

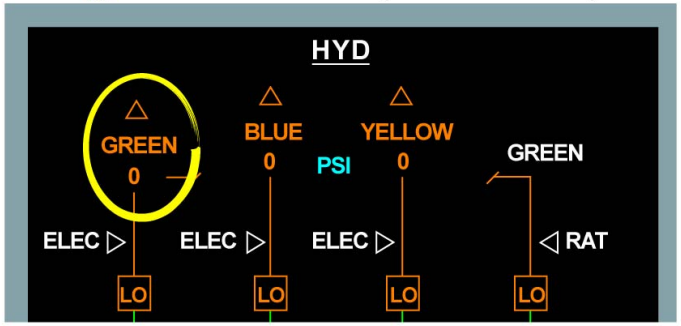

MAINTENANCE - INSTALLATION OF THE SAFETY DEVICES ON THE L/G DOORS

Installation of the safety devices.

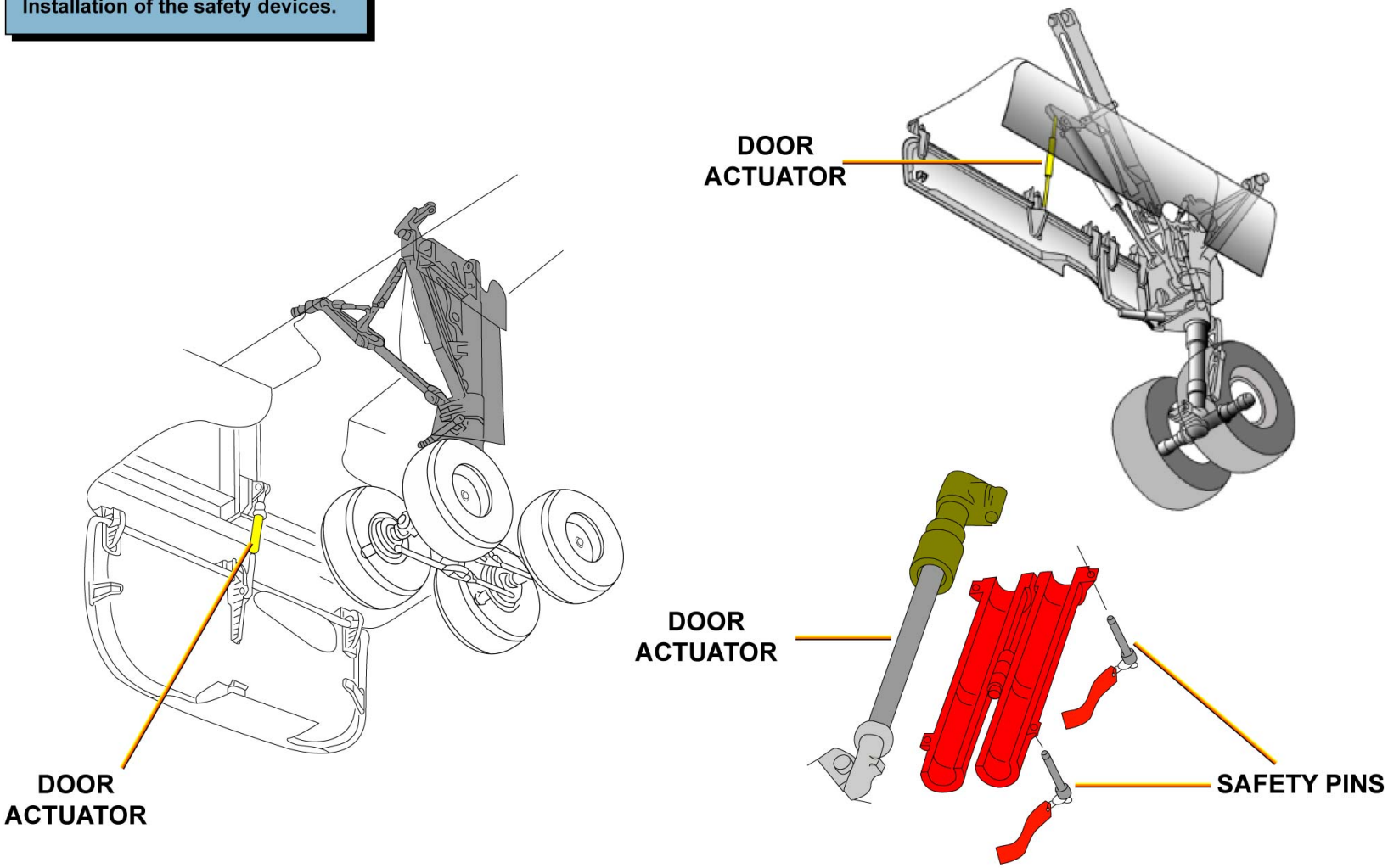

MAINTENANCE - INSTALLATION OF THE SAFETY DEVICES ON THE L/G DOORS

G7508471 - G3NT1T0 - FM32B1000000003

This Page Intentionally Left Blank

G7508471 - G3NT1T0 - FM32B1000000003

LANDING GEAR SYSTEM LINE MAINTENANCE BRIEFING (2)

MAINTENANCE (continued)

L/G DOORS GROUND OPENING

Make sure that the L/G lever agrees with the position of the L/G and the free-fall extension switch is in the OFF position. Make sure that the area is clear and the doors can be opened without any obstruction. For the MLG, open the access panel located FWD of the MLG. Pull the ground door-opening handle downwards to open the door uplocks. Secure the handle with the safety pin and install the safety devices on the MLG door actuators.

The NLG ground door-opening handle is installed on the aft bulkhead of the NLG bay. Pull the ground door-opening handle downwards to open the NLG door uplocks. Secure the handle with the safety pin and install the safety devices on the NLG door actuators.

G7508471 - G3NT1T0 - FM32B1000000003

Safety precautions.

LANDING GEAR DOORS (CLOSED)

1 L/G LEVER (DOWN POSITION)

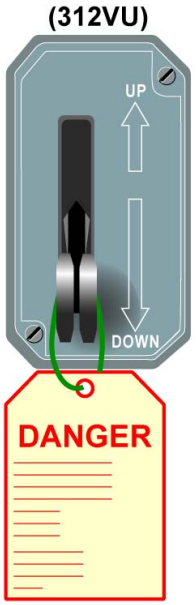

2 LDG GEAR GRVTY EXTN SWITCH (OFF POSITION)

MAINTENANCE - L/G DOORS GROUND OPENING

Open the doors:

Open the MLG doors.

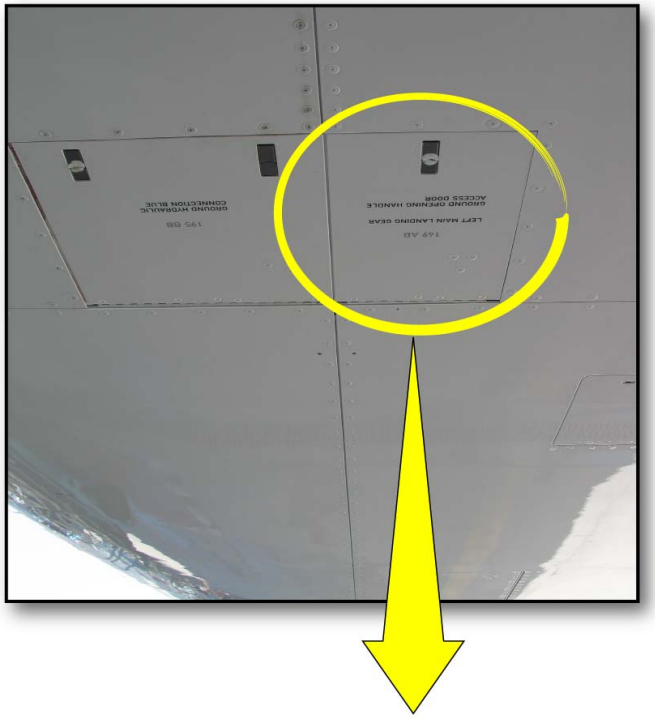

RIGHT MLG GROUND OPENING HANDLE

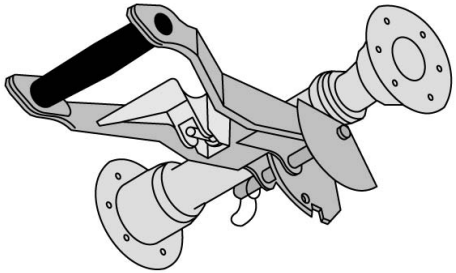

LEFT MLG GROUND OPENING HANDLES

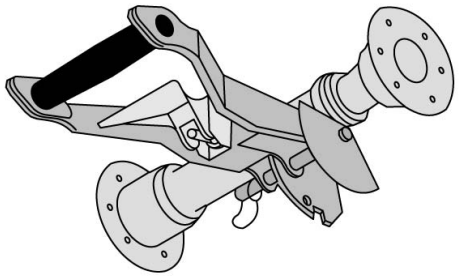

MAINTENANCE - L/G DOORS GROUND OPENING

Open the doors:

Open the NLG doors.

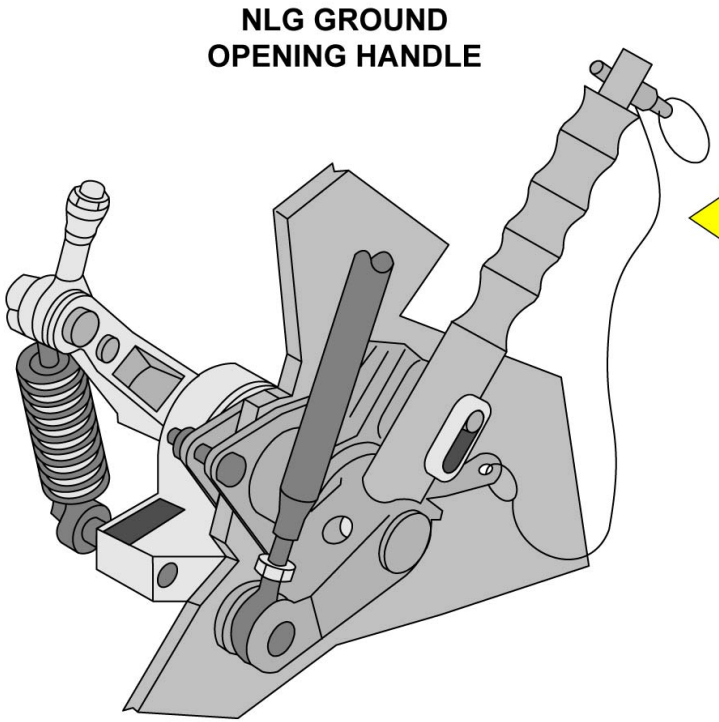

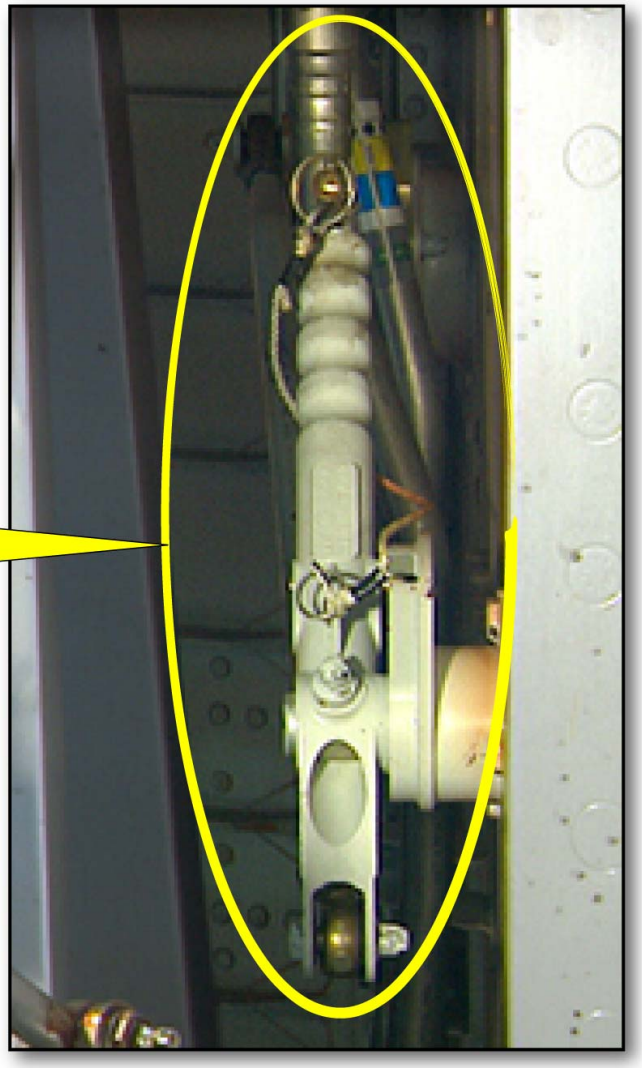

MAINTENANCE - L/G DOORS GROUND OPENING

LANDING GEAR SYSTEM LINE MAINTENANCE BRIEFING (2)

MAINTENANCE (continued)

L/G DOORS GROUND CLOSING

Pressurize the green hydraulic system. Remove the safety devices from the door actuators.
Push the ground door-opening handle upward to close the doors, making sure that the uplocks engage. Secure the handle with the safety pin and close the access panel. De-pressurize the green hydraulic system. Remove the ground support equipment, special tooling, access platforms and all warning notices. Make sure that the MLG maintenance doors are closed before dispatch.

G7508471 - G3NT1T0 - FM32B100000003

Aircraft maintenance configuration.

Green hydraulic system pressurized.

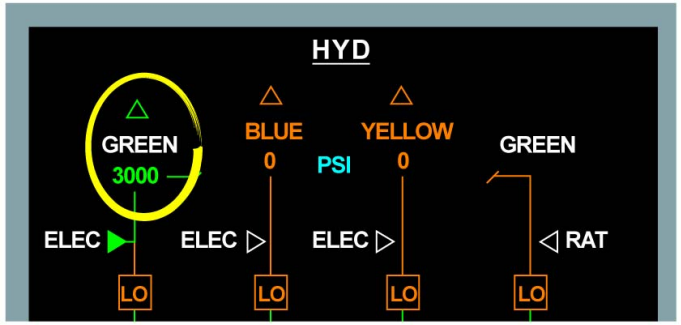

ECAM SD

Remove the safety devices from the door actuators.

MAINTENANCE - L/G DOORS GROUND CLOSING

Close the doors.

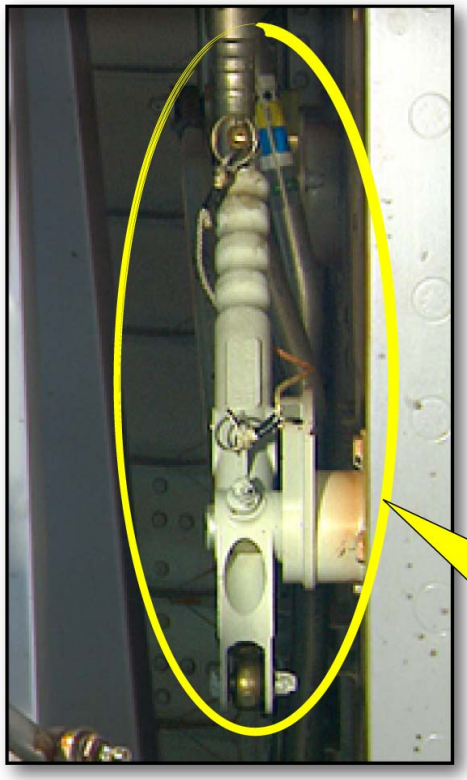

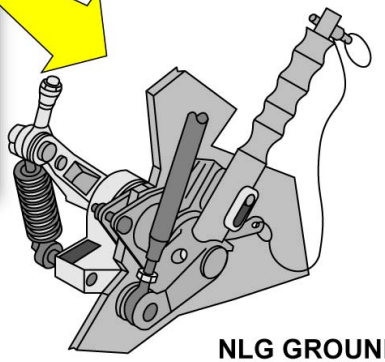

NLG GROUND
OPENING HANDLE

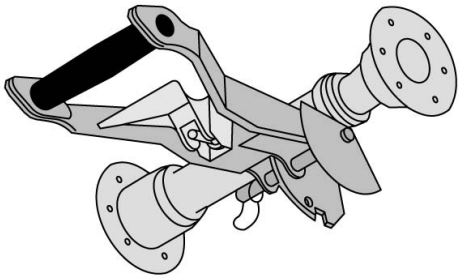

MLG GROUND
OPENING HANDLES

MAINTENANCE - L/G DOORS GROUND CLOSING

G7508471 - G3NT1T0 - FM32B100000003

This Page Intentionally Left Blank

G7508471 - G3NT1T0 - FM32B1000000003

LANDING GEAR SYSTEM LINE MAINTENANCE BRIEFING (2)

MAINTENANCE (continued)

TYRE PRESSURE CHECK

Make sure that each tire is cold before you measure its inflation pressure.

NOTE: A tire is cold after approximately 3 hours since its previous operation.

These pressures apply for loaded tires. You must obey the instructions given by the AMM table 32-41-00 when you measure the tire pressures: If there is a large temperature decrease (25 deg C) between the departure and the destination airports, the given tire pressures must be adjusted (Ref. TASK 12-14-32-614-801).

When the tires are still hot if you think that a tire has a low pressure, do a pressure check of the tires on the same landing gear and make a record of the tire pressures:

- identify the highest pressure that you recorded,
- if the pressure of a tire is less than 90% of the highest tire pressure that you recorded, inflates that tire to the highest recorded pressure,
- make a record in the aircraft technical log.

CAUTION: YOU MUST NOT DECREASE THE PRESSURE OF A HOT TIRE.THIS PREVENTS AN INCORRECT LOW PRESSURE WHEN THE TIRE IS COLD.

NOTE: It is possible that the tire pressure can be higher than the maximum nominal value.

G7508471 - G3NT1T0 - FM32B100000003

AMM TASK 32-41-00-220-802

NLG PRESSURE	MLG PRESSURE	TIRE CONDITION/ACTION NECESSARY
More than 12.0 bar (174 psi)	More than 14.9 bar (216 psi)	Over-inflation. Make sure the measurement is corrrect with another pressure gage. If it is correct, deflate the tire to the maximum normal pressure.
11.4 to 12.0 bar (165-174psi)	14.2 to 14.9 bar (206-216psi)	Normal pressure range. Do not adjust the tire pressure.
10.8 to 11.4 bar (157-165psi)	13.5 to 14.2 bar (196-206psi)	Permitted daily pressure range. Inflate the tire to the maximum normal pressure.
10.3 to 10.8 bar (149-157psi)	12.8 to 13.5 bar (185-196psi)	Under-inflation. Inflate the tire to the maximum normal pressure. The tire pressure must be measured again the next day. If the tire is under-inflated again, you must replace the wheel.
Less than 10.3 bar (149 psi)	Less than 12.8 bar (185 psi)	Leakage of pressure. You must replace the wheel. You must inspect the adjacent wheel.
Less than 9.1 bar (132 psi)	Less than 11.4 bar (166 psi)	Very bad under-inflation or total deflation of the tire. You must replace the wheel. If you cannot be sure that the wheels have not turned while deflated, you must replace the adjacent wheel.

32-41-00

MAINTENANCE - TYRE PRESSURE CHECK

G7508471 - G3NT1T0 - FM32B100000003

LANDING GEAR SYSTEM LINE MAINTENANCE BRIEFING (2)

MAINTENANCE (continued)

CHECK BRAKE PACK WEAR INDICATORS

WARNING: OBEY THE L/G GENERAL WARNINGS AND SAFETY PROCEDURES.
LET THE BRAKES AND WHEELS COOL DOWN BEFORE WORKING ON THEM.
DO NOT USE LIQUID OR GAS FIRE EXTINGUISHERS DIRECTLY ON A HOT WHEEL OR BRAKE.

Make sure that the wheel chocks are in position. Set the PARK BRK to ON and check the accumulator pressure on the blue system triple gauge indicator. If there is at least one brake wear indicator installed and if the indicator is within limits, the brake is serviceable. If there is no wear indicator installed, the brake must be de-activated until it can be replaced.

Check each MLG brake wear indicator pin with the parking brake applied. If the brake wear indicator pin is flush with the brake-housing bracket, the brake must be replaced. If no other hydraulic servicing tasks have to be completed, the area can be closed. All tools, test and support used during this procedure have to be removed.

G7508471 - G3NT1T0 - FM32B1000000003

Safety precautions.

Make sure that the wheel chocks are in position. Set the parking brake to ON and check the accu. pressure on the triple gauge indicator.

SAFETY DEVICES (INSTALLED)

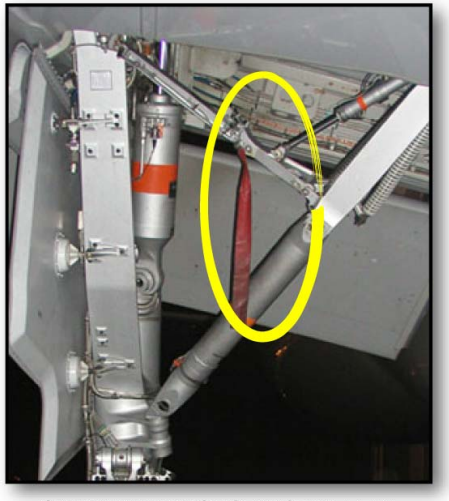

SAFETY DEVICES (INSTALLED)

TRIPLE PRESSURE INDICATOR

WHEEL CHOCKS (INSTALLED)

MAINTENANCE - CHECK BRAKE PACK WEAR INDICATORS

Inspection:

Check each MLG brake wear indicator pin with parking brake applied.

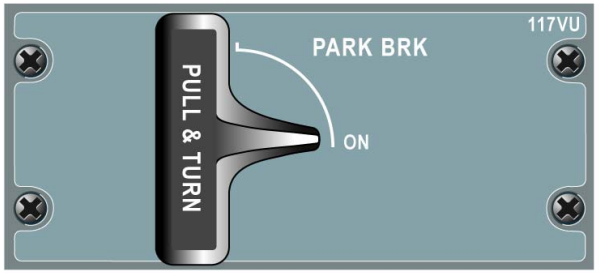

PARKING BRAKE (APPLIED)

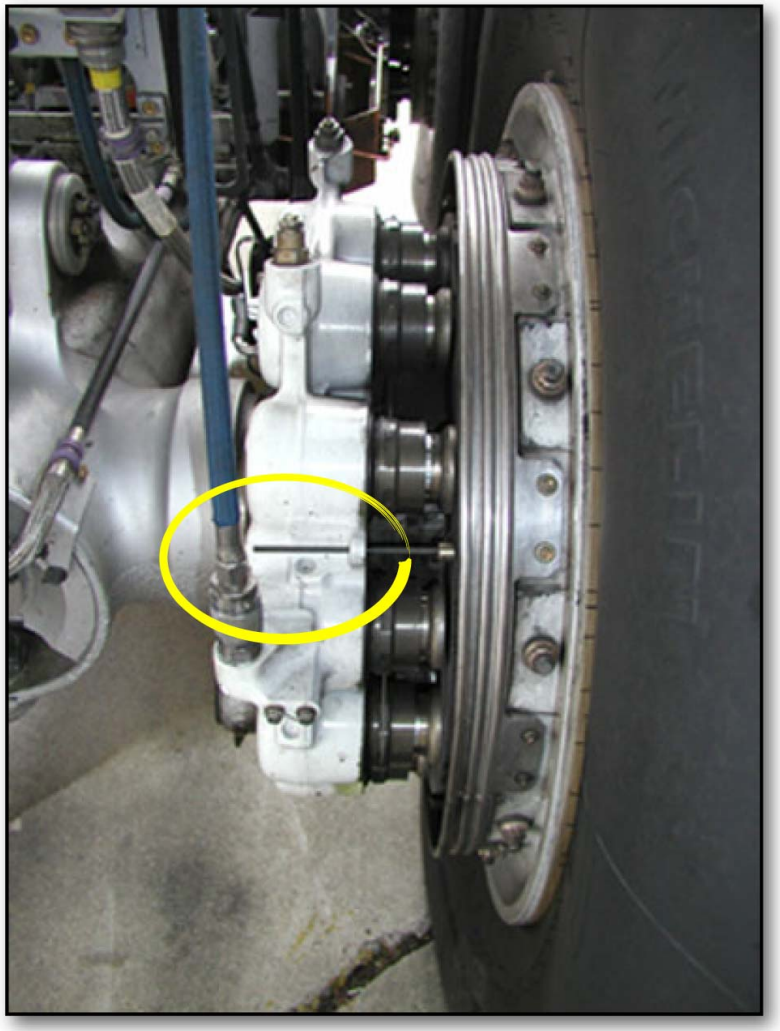

BRAKE WEAR INDICATOR (INSTALLED)

MAINTENANCE - CHECK BRAKE PACK WEAR INDICATORS

This Page Intentionally Left Blank

G7508471 - G3NT1T0 - FM32B1000000003

LANDING GEAR SYSTEM LINE MAINTENANCE BRIEFING (2)

MAINTENANCE (continued)

MLG WHEEL BRAKE DEACTIVATION PROCEDURE

WARNING: MAKE SURE THAT THE SAFETY DEVICES AND THE WARNING NOTICES ARE IN POSITION BEFORE YOU START A TASK ON OR NEAR:
- THE FLIGHT CONTROLS,
- THE FLIGHT CONTROL SURFACES,
- THE LANDING GEAR AND THE RELATED DOORS,
- COMPONENTS THAT MOVE.

MOVEMENT OF COMPONENTS CAN KILL OR INJURE PERSONS.
MAKE SURE THAT THE GROUND SAFETY-LOCKS ARE CORRECTLY INSTALLED ON THE LANDING GEAR. THIS PREVENTS UNWANTED MOVEMENT OF THE LANDING GEAR.

Make sure that the green and blue hydraulic systems are depressurized.
Set the PARK BRK to the OFF position.
Disconnect the half coupling, and use a clean miscellaneous and cleaning agents to clean it.
Safety the half coupling to the brake hose fairlead with the lockwire. Tighten the lockwire and twist to lock it. Put the blanking cap on the fixed half coupling. Remove the blanking screw and the washer from the applicable bleed valve. Use a miscellaneous at the applicable bleed valve to catch the hydraulic fluid. Loosen the bleed valve to release the residual hydraulic pressure from the isolated brake. Tighten the bleed valve and install the washer and the blanking screw. Tighten the blanking screw.
Energize the aircraft electrical circuits. Start the EIS. Pressurize the green hydraulic system. On the right center instrument panel, set the A/SKID switch to ON. Then do the following test:
- fully push in the related brake pedals and hold them in this position,
- make sure that there are no leaks on the green disconnected hydraulic-pressure line,
- release the brake pedals,
- depressurize the green hydraulic system,
- fully push in the related brake pedals and hold them in this position,
- make sure that there are no leaks on the blue disconnected hydraulic-pressure line,
- release the brake pedals,

On the EWD, make sure that the caution BRAKES RELEASED BRAKE * RELEASED does not show. (* = wheel No.). Do the EIS stop procedure and de-energize the aircraft electrical circuits.

Deactivation of the MLG wheel brake:

Make sure that the green and blue hydraulic systems are depressurized.
Set the PARK BRK to the OFF position.
Disconnect the half coupling.
Loosen the bleed valve to release the residual hydraulic pressure from the isolated brake.

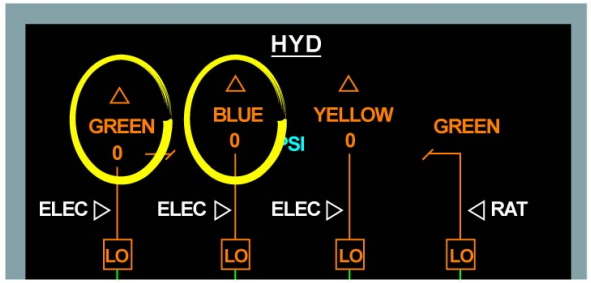

HYDRAULIC SYSTEMS (DEPRESSURIZED)

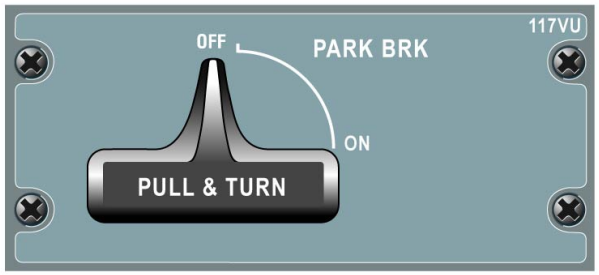

PARKING BRAKE (RELEASED)

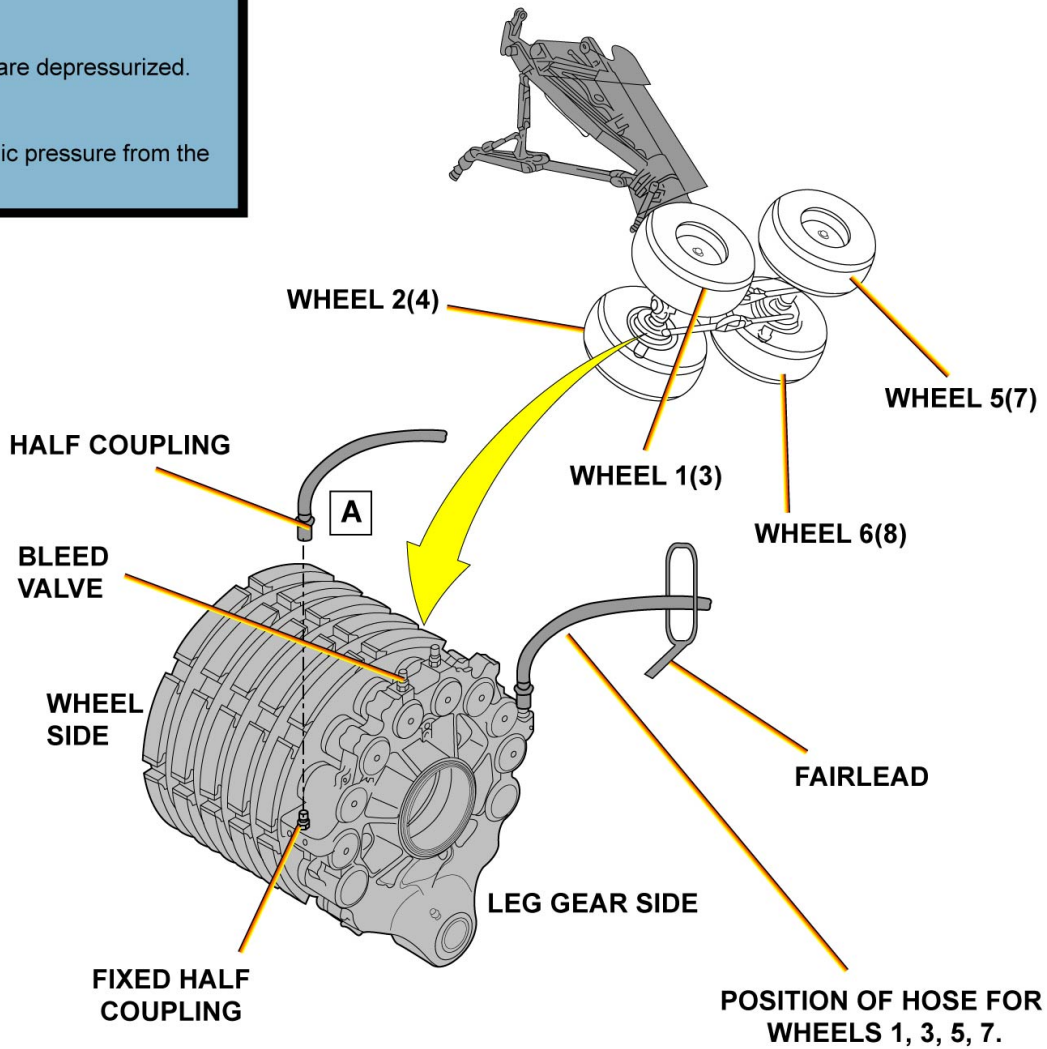

MAINTENANCE - MLG WHEEL BRAKE DEACTIVATION PROCEDURE

G7508471 - G3NT1T0 - FM32B100000003

LANDING GEAR SYSTEM LINE MAINTENANCE BRIEFING (2)

MAINTENANCE (continued)

ACTIVATING THE MLG SEAL CHANGEOVER VALVE

Obey the L/G general warnings and safety precautions. Make sure that the green hydraulic system is depressurized and the wheel well doors are closed. Open and safety tag the related C/Bs. Make sure that the MLG safety devices are installed and that the wheel chocks are in place. Place a warning notice in the cockpit to prevent L/G operation. Also place a warning notice not to open the MLG door (if the door is opened while the leg is deflated, the door will touch the ground). Check the access plate to make sure that the spare seal changeover valve has not been activated. If the message "Spare Seal Energized" is visible, the seal has been activated and the shock absorber seals must be replaced.

Remove the access plate, then fully depressurize the shock absorber to get access to the spare seal changeover valve.

Turn the spare seal changeover valve fully clockwise and safety this position.

Pressurize the shock absorber, then clean the chromed part of the strut with a clean lint-free cloth and approved cleaning agents.

Check/replenish the fluid contents at the next opportunity. Install the access plate again to display the message "Spare Seal Energized".

Remove the ground support equipment, special tooling, and access platforms. Remove all warning notices and close C/Bs.

G7508471 - G3NT1T0 - FM32B100000003

Aircraft maintenance configuration.
Safety precautions.

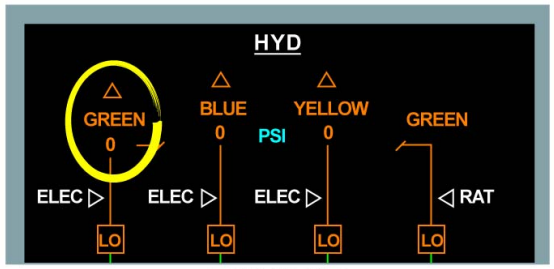

ECAM SD

Green hydraulic system depressurized.

WHEELS CHOCKS (INSTALLED)

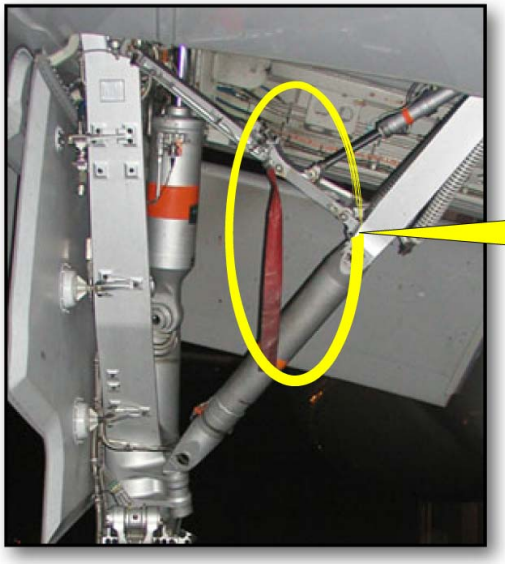

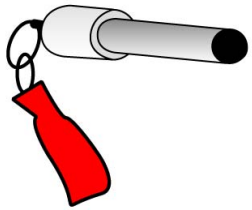
SAFETY DEVICES (INSTALLED)

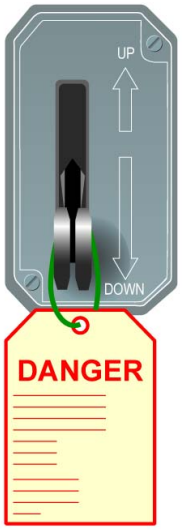

L/G LEVER
(DOWN POSITION)
(312VU)

MAINTENANCE - ACTIVATING THE MLG SEAL CHANGEOVER VALVE

To close the seal change over valve:
Depressurize the shock absorber to get access to the spare seal change over valve.

The MLG doors must be closed.

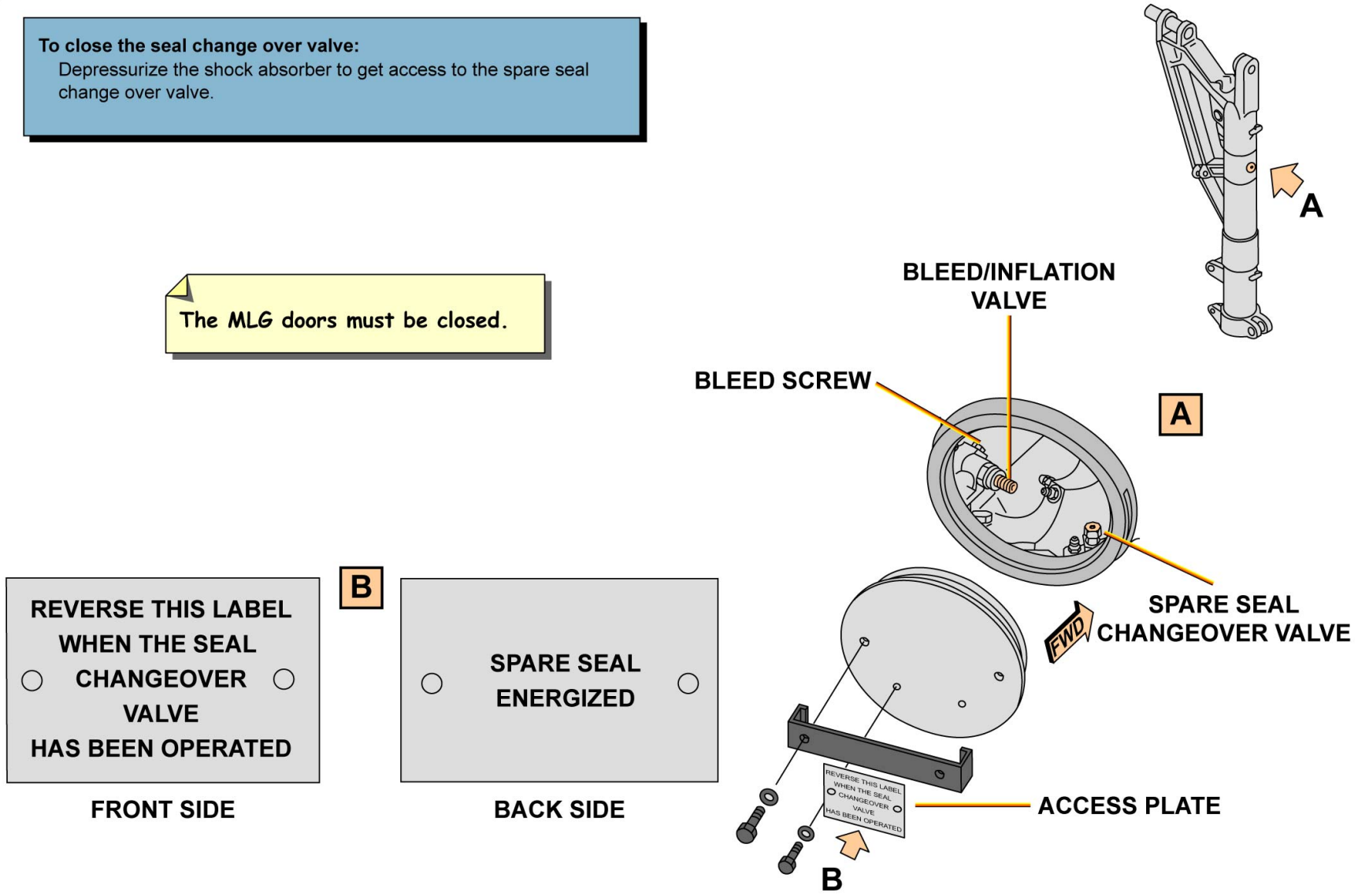

MAINTENANCE - ACTIVATING THE MLG SEAL CHANGEOVER VALVE

To close the seal change over valve:
Turn the valve clockwise to activate the second seal.

The seal changeover valve is shown 90 degrees from its normal position.

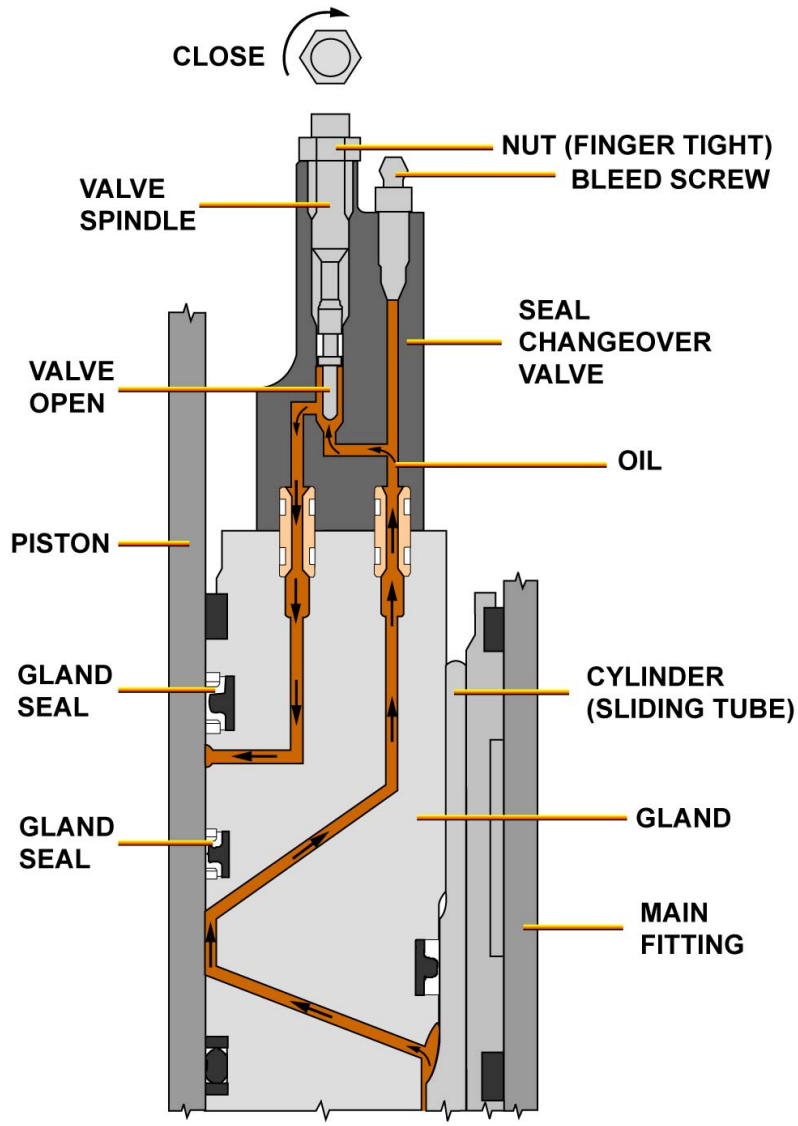

MAINTENANCE - ACTIVATING THE MLG SEAL CHANGEOVER VALVE

To close the seal change over valve:
Pressurize the shock absorber and turn over the access plate.

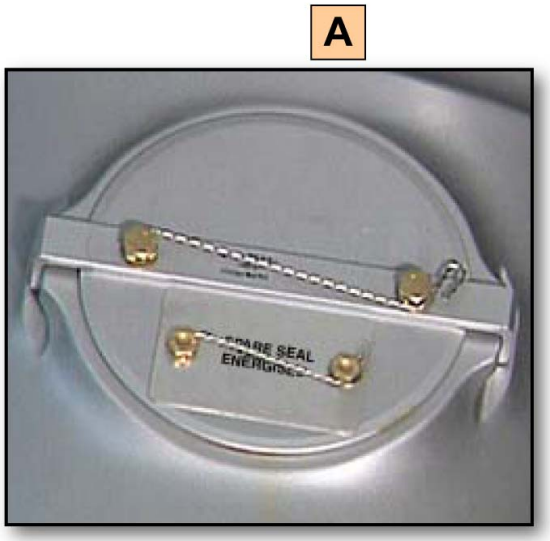

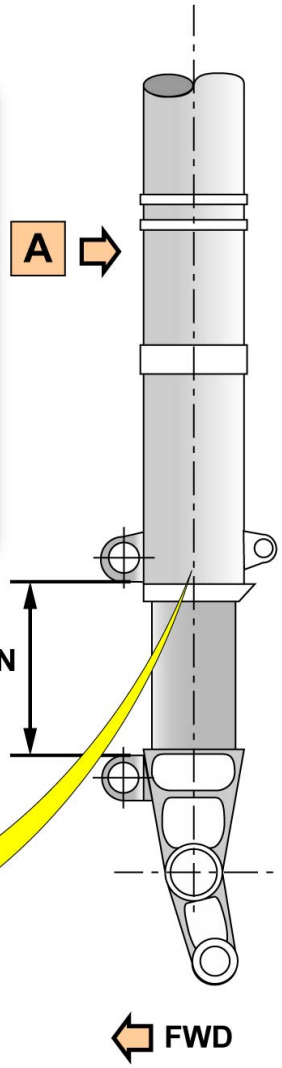

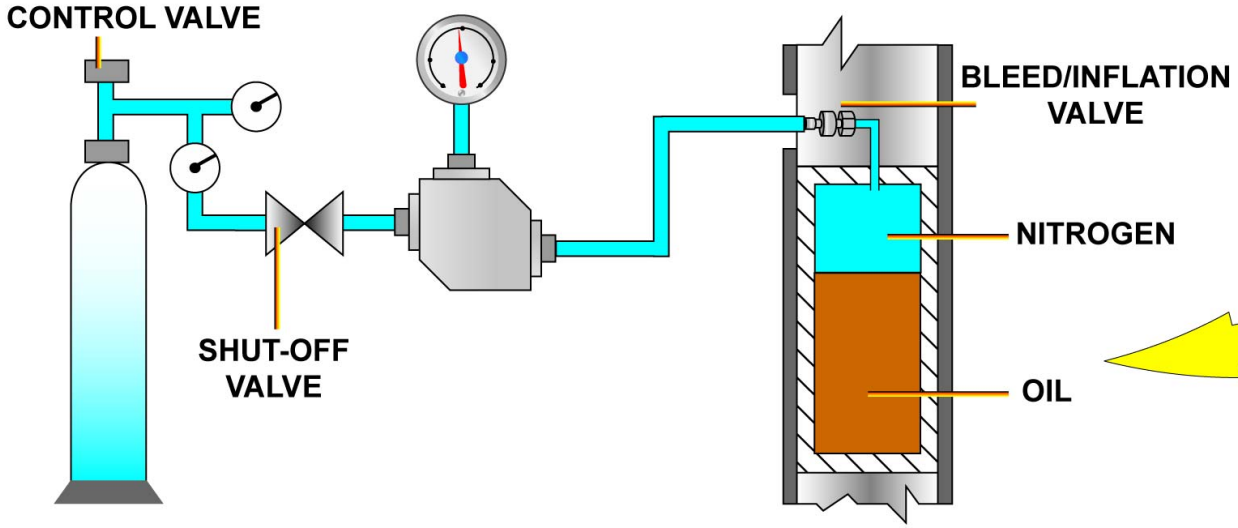

MAINTENANCE - ACTIVATING THE MLG SEAL CHANGEOVER VALVE

G7508471 - G3NT1T0 - FM32B100000003

This Page Intentionally Left Blank

G7508471 - G3NT1T0 - FM32B1000000003

LANDING GEAR SYSTEM LINE MAINTENANCE BRIEFING (2)

MAINTENANCE (continued)

ACTIVATING THE NLG SEAL CHANGEOVER VALVE

Place a warning notice in the cockpit to prevent L/G operation and make sure that the wheel chocks are in place. Make sure that the green hydraulic system is depressurized. Open the NLG doors and fit the NLG safety devices on the door actuator. Open and safety tag the related C/Bs.

Check that the colored band of the spare seal changeover valve is in view. This confirms that the valve has not been already activated. If it has been activated, the NLG shock absorber seals have to be replaced. Remove the cap screw. Turn the seal changeover valve counter clockwise until it is closed. The colored band will be out of view. Install the cap screw and safety the cap screw with a lock wire. Clean the chromed part of the NLG shock strut with a clean lint-free cloth and approved cleaning agents. Check/replenish the fluid contents of the NLG shock strut at the next opportunity. Remove the ground support equipment, special tooling, and access platforms. Remove all warning notices. Close C/Bs.

G7508471 - G3NT1T0 - FM32B1000000003

Safety precautions.
Aircraft maintenance configuration.

Green hydraulic system depressurized.

SAFETY DEVICE (INSTALLED)

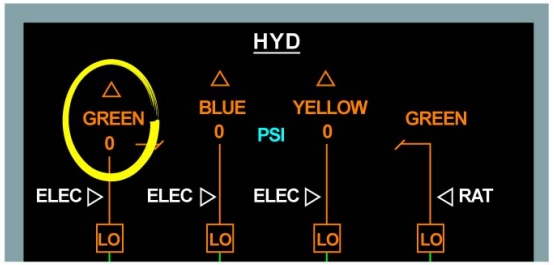

ECAM SD

DOOR ACTUATORS

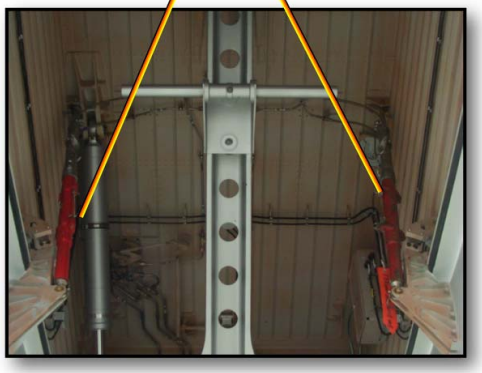

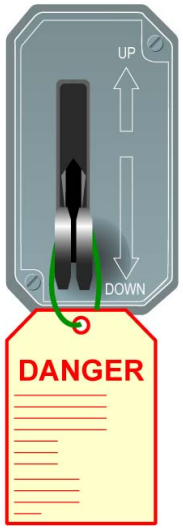

L/G LEVER
(DOWN POSITION)
(312VU)

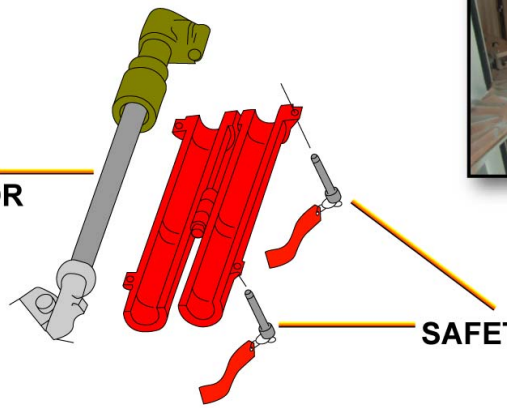

DOOR ACTUATOR

SAFETY PINS

MAINTENANCE - ACTIVATING THE NLG SEAL CHANGEOVER VALVE

To close the seal changeover valve:

Check the colored band to confirm the valve status.
Remove the cap screw and turn the valve counter clockwise to activate the second seal. Check the colored band is out of view.

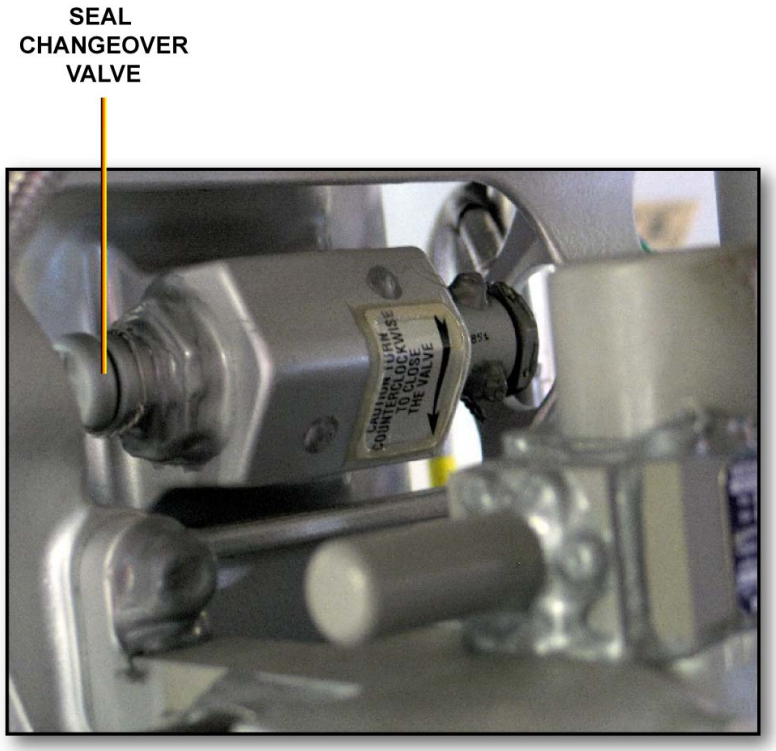

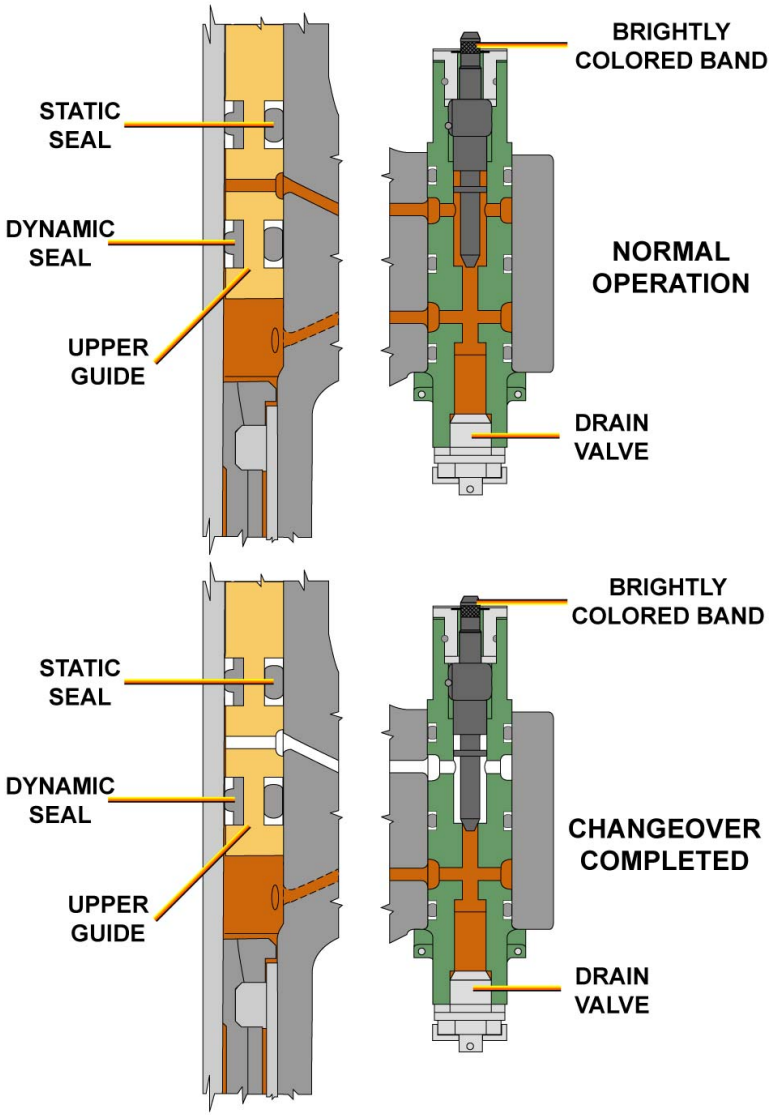

MAINTENANCE - ACTIVATING THE NLG SEAL CHANGEOVER VALVE

This Page Intentionally Left Blank

G7508471 - G3NT1T0 - FM32B1000000003

LANDING GEAR SPECIAL FEATURES (3)

MLG SHOCK ABSORBER

The shock absorber absorbs the taxi, take-off and landing loads. The shock absorber is a capsule type that includes a sliding tube. It is an oleo-pneumatic unit that is installed in the main fitting. When it is compressed the load is transmitted to the hydraulic fluid and gas that fill the shock absorber. The recoil stroke is slow, which makes sure that the aircraft does not become airborne again after it touches down on landing.
The cylinder is the part of the shock absorber that moves when the landing, take off or taxi loads increase or decrease. Its external face has a wear-resistant surface at the bearing interfaces. The cylinder operates around the piston, where the compression of the gas occurs.
During the compression stroke, the cylinder moves up around the piston. Thus the volume in the cylinder decreases. This increases the pressure in the piston chamber. As the hydraulic fluid flows into the piston chamber, the gas compresses to absorb the compression load.
The pressure in the piston chamber forces the hydraulic fluid to return to the cylinder chamber. At the same time, the volume of recoil chamber is decreased. As the cylinder (sliding tube) extends, seals against the piston seal closed ports in the piston to decrease the flow from the recoil chamber. Thus the recoil slows at the end of the shock absorber extension stroke.

G7508471 - G3NT1T0 - FM32D1000000002

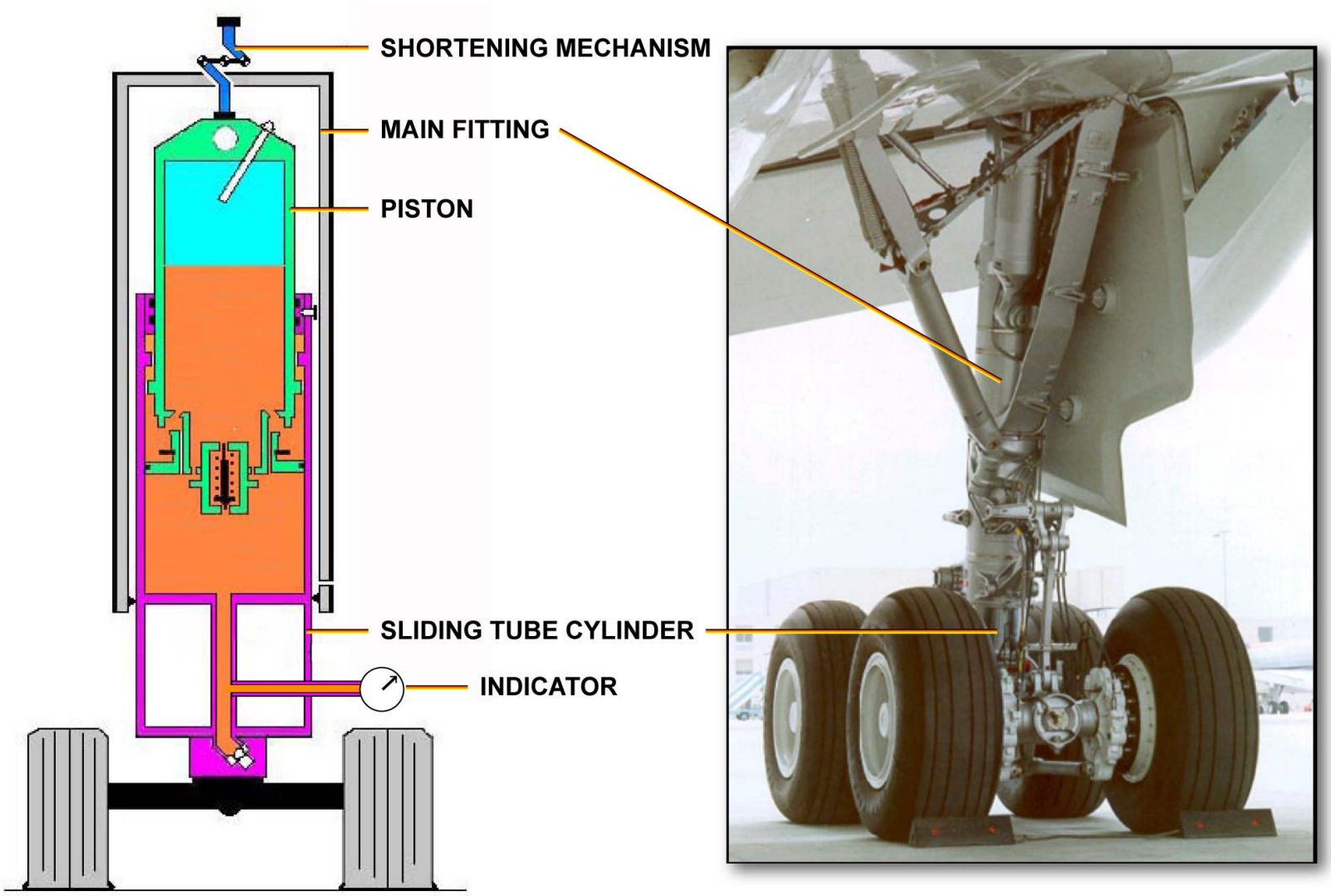

MLG SHOCK ABSORBER

G7508471 - G3NT1T0 - FM32D100000002

LANDING GEAR SPECIAL FEATURES (3)

NLG/CLG SHOCK ABSORBER

The shock absorber is a two-chamber, oleo-pneumatic telescopic strut, made from the main fitting and the sliding tube. The main fitting has a first stage chamber with nitrogen gas and hydraulic fluid, with no separation between the gas and the fluid. The sliding tube has a second stage high-pressure gas chamber. A floating piston in the sliding tube separates the first stage chamber from the second stage chamber. Damping rings and fixed orifices in the upper and lower diaphragm control the movement of the fluid between the first and second stages to decrease the speed at which the shock absorber extends. There is also a damping ring between the first stage chamber and the recoil chamber.

G7508471 - G3NT1T0 - FM32D1000000002

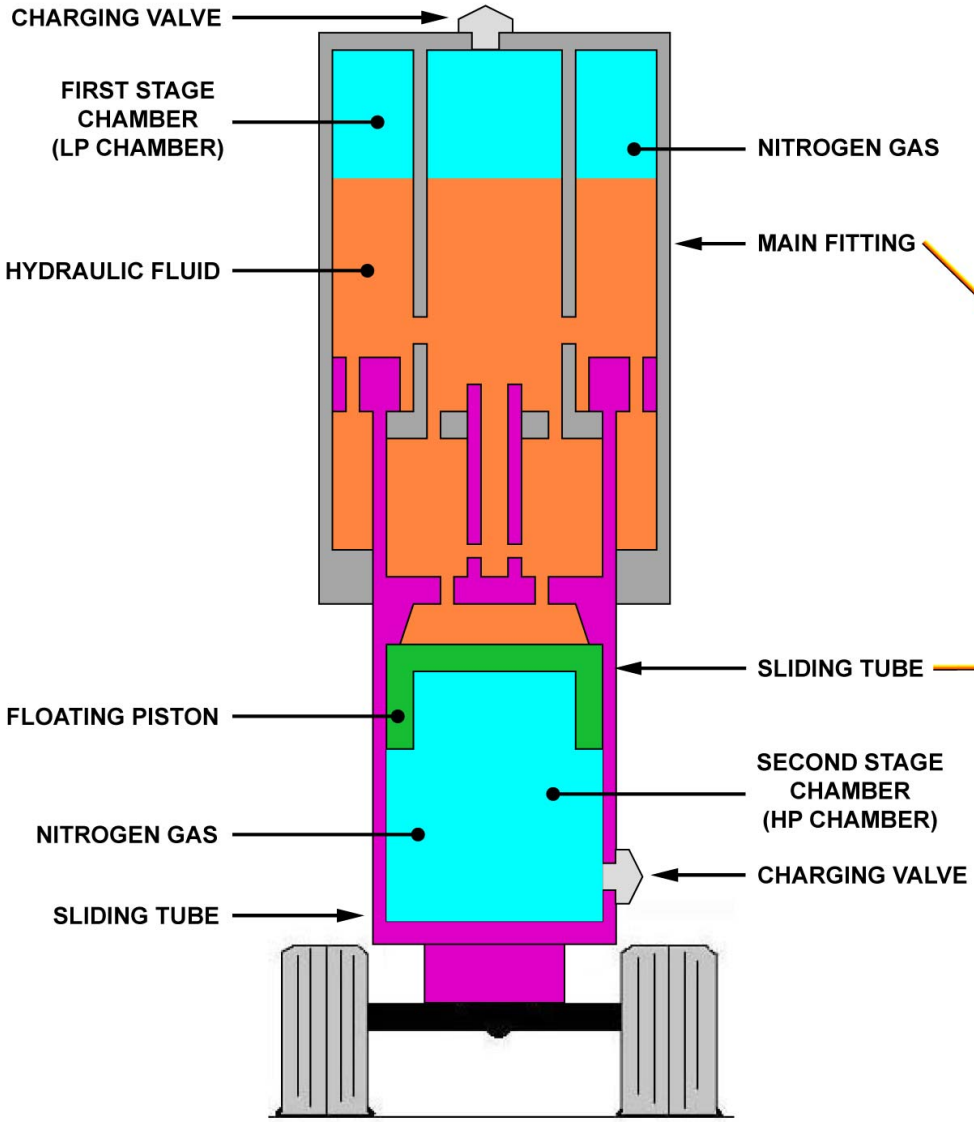

SHOCK ABSORBER

NLG/CLG SHOCK ABSORBER

G7508471 - G3NT1T0 - FM32D100000002

LANDING GEAR SPECIAL FEATURES (3)

SHORTENING MECHANISM

During retraction the shortening mechanism operates to decrease the length of the L/G. Forces are transmitted through the adjustable link to the bellcrank lever, which pushes the connecting link to turn the upper link. As the upper link starts to turn it breaks the overcenter lock and draws the lower link up. This pulls the shock absorber up into the main fitting so that the MLG can go into the bay. When the landing gear control lever is set to DOWN position, the movement of the MLG also causes the shortening mechanism to extend the shock absorber. When the shock absorber is fully extended the shortening links are overcenter and transmit shock absorber loads to the structure of the aircraft.

G7508471 - G3NT1T0 - FM32D1000000002

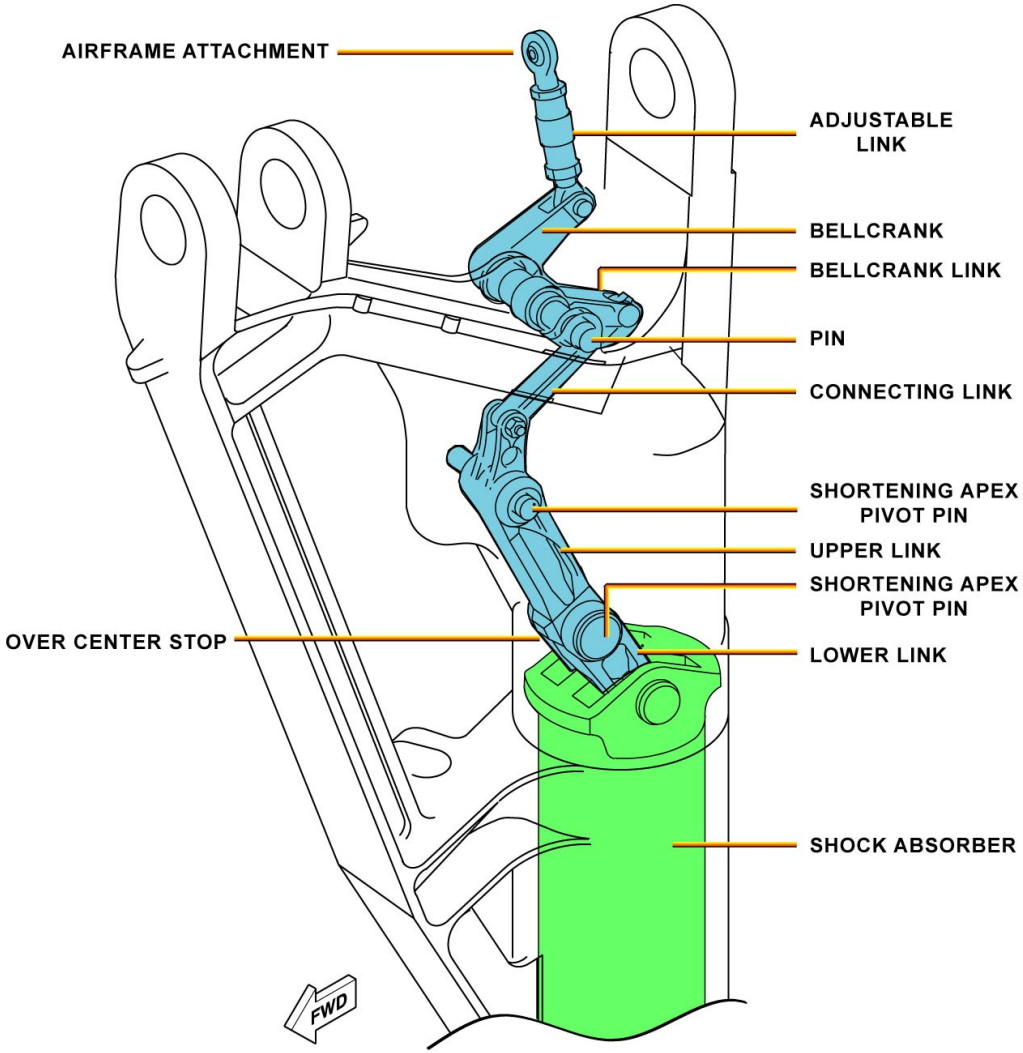

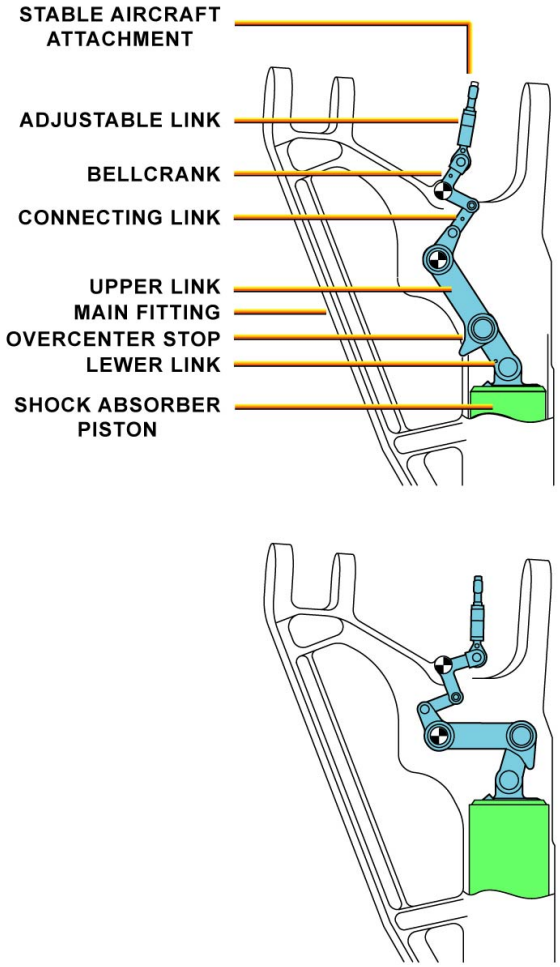

SHORTENING MECHANISM

G7508471 - G3NT1T0 - FM32D1000000002

LANDING GEAR SPECIAL FEATURES (3)

MLG PITCH TRIMMER

The retracted and extended position.
The Pitch trimmer is a hydraulically operated cylinder installed between the main fitting and articulating links. It has a cylinder, a piston rod. The cylinder has a bleed screw and a vent plug. The bleed screw lets you bleed air from the pitch trimmer. Hydraulic pressure is continuously supplied to the pitch trimmer when the Green hydraulic system is pressurized. When there is no mechanical force on the pitch trimmer, hydraulic pressure causes the piston rod to stay in the retracted position. When the piston extends, free flow hydraulic fluid goes through the two way bi-directional restrictor and the pressure relief valve to the return line. When the external force is released from the pitch trimmer the green hydraulic system pressure causes the piston rod to retract.
When the aircraft starts to leave the ground during a take-off, the load on the MLG decreases. This lets the shock absorber extend and the pitch trimmer retract. As the pitch trimmer retracts, it operates the articulating links, which subsequently turn the bogie (front wheels up). When the piston of the pitch trimmer gets to its external stop, the shock absorber continues to extend, which further turns the bogie to its trim angle.
The movement of the bogie beam and the extension of the shock absorber increase the overall length of the MLG. This lets the aircraft move through a large angle during a take-off. During retraction of the MLG, the shortening mechanism causes the articulating links to move the bogie beam back to its lateral position (for entry into the MLG bay).

G7508471 - G3NT1T0 - FM32D100000002

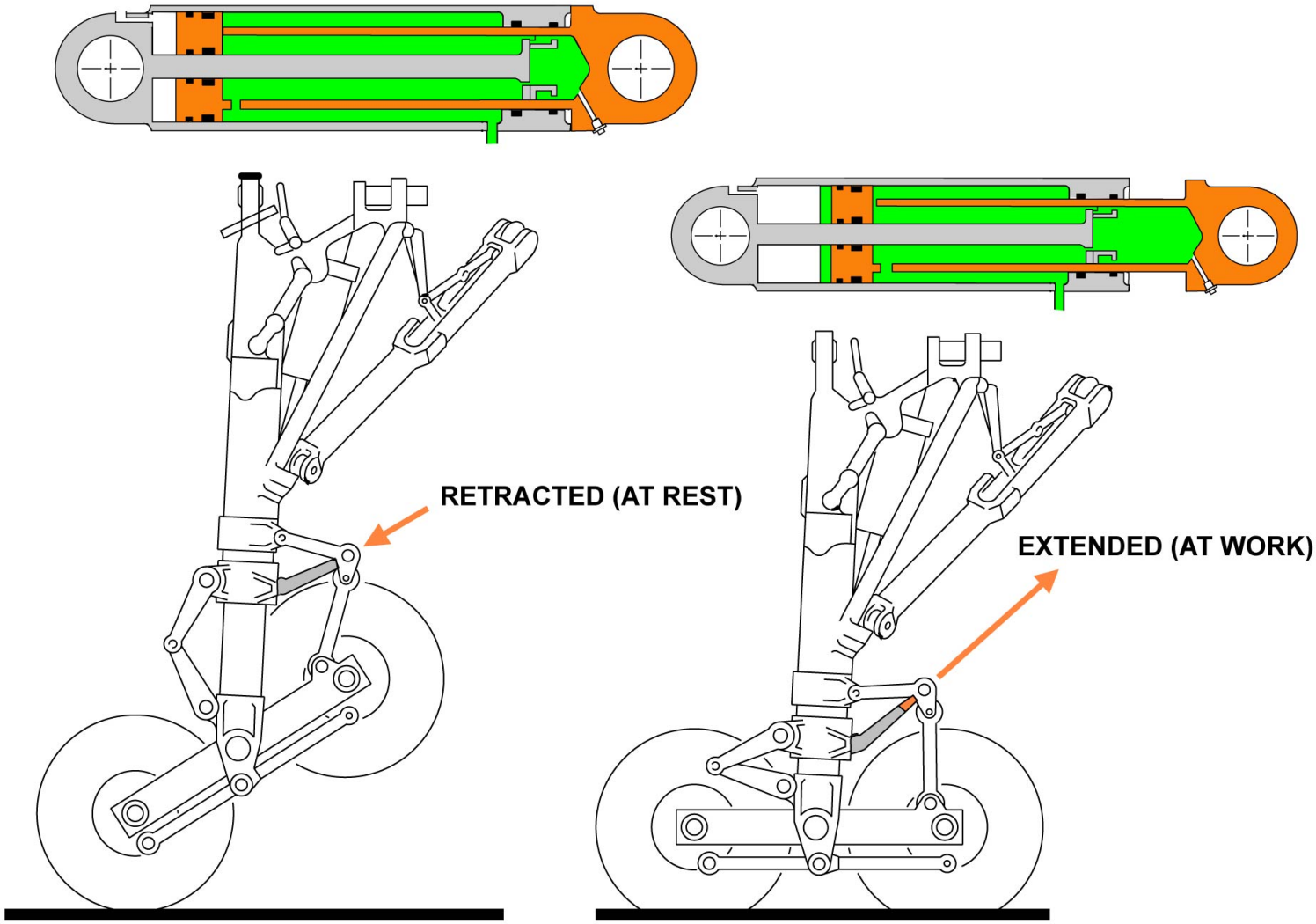

MLG PITCH TRIMMER

G7508471 - G3NT1T0 - FM32D1000000002

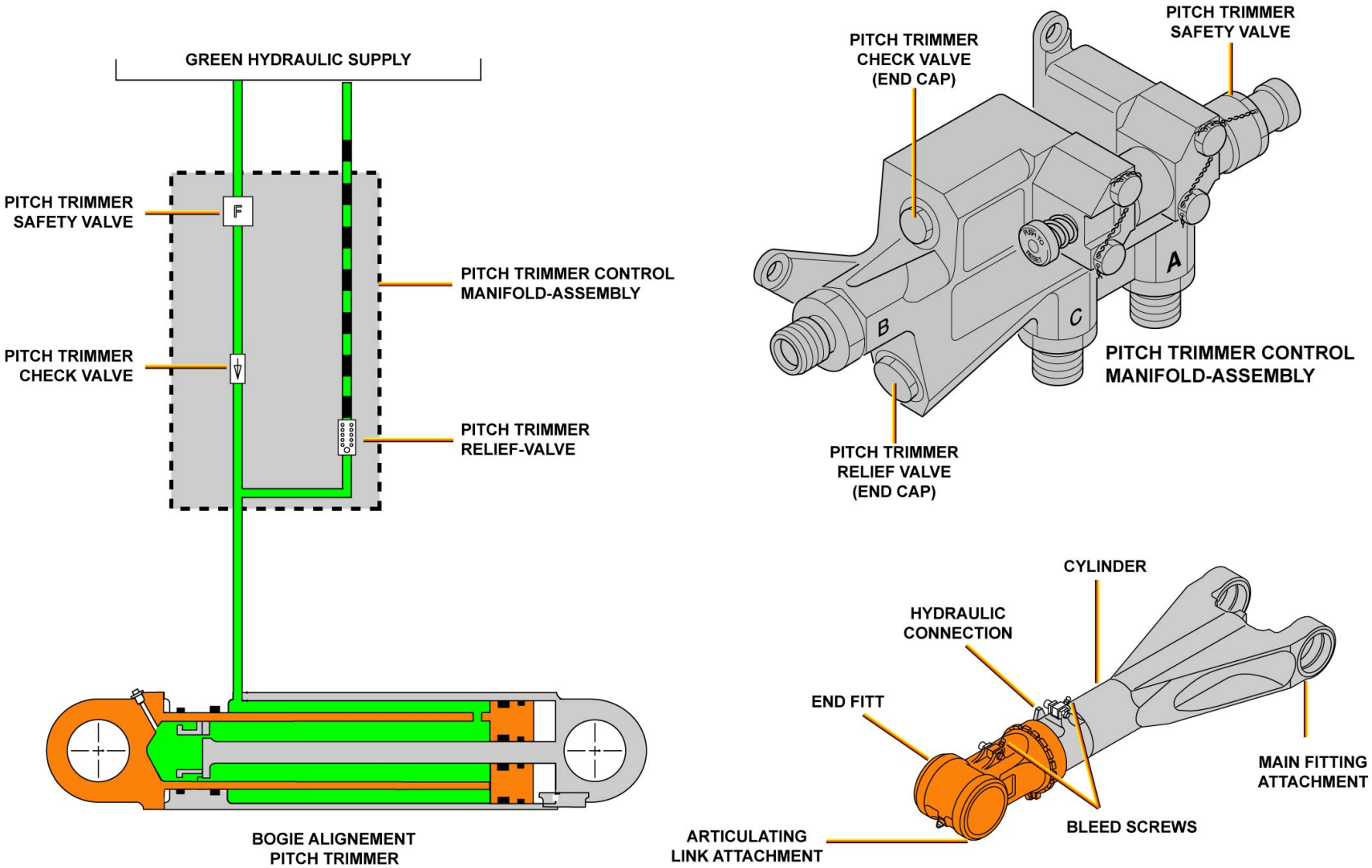

MLG PITCH TRIMMER

G7508471 - G3NT1T0 - FM32D100000002

This Page Intentionally Left Blank

G7508471 - G3NT1T0 - FM32D1000000002

LANDING GEAR SPECIAL FEATURES (3)

SEAL CHANGEOVER VALVE

The seal changeover valve is installed in the main fitting in a manifold. The manifold is attached to a lug on the gland housing that holds the shock absorber gland seals. The upper bearing of the shock absorber is installed on the external surface of the gland housing and the sliding member. The gland housing holds the primary and secondary seals. In normal operation of the shock absorber the primary seals are used and the secondary seals are balanced through oil pressure on the two sides of the seal. If the primary seal leaks, the changeover valve stops the oil pressure to one side of the seal to operate the secondary seals.
MLG
NLG
CLG

G7508471 - G3NT1T0 - FM32D1000000002

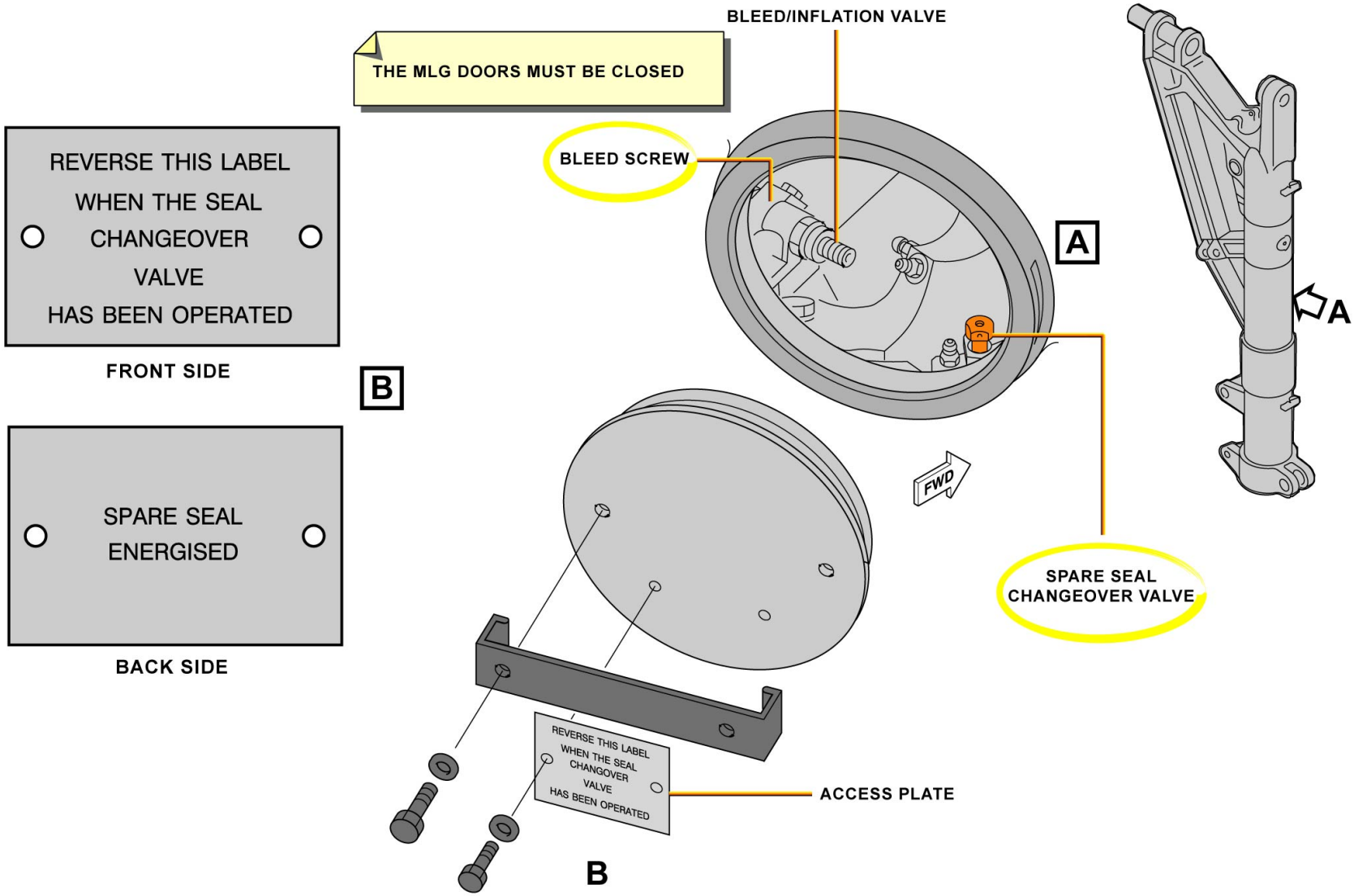

SEAL CHANGEOVER VALVE

G7508471 - G3NT1T0 - FM32D1000000002

THE SEAL CHANGEOVER VALVE IS SHOWN 90 DEGREES FROM ITS NORMAL POSITION

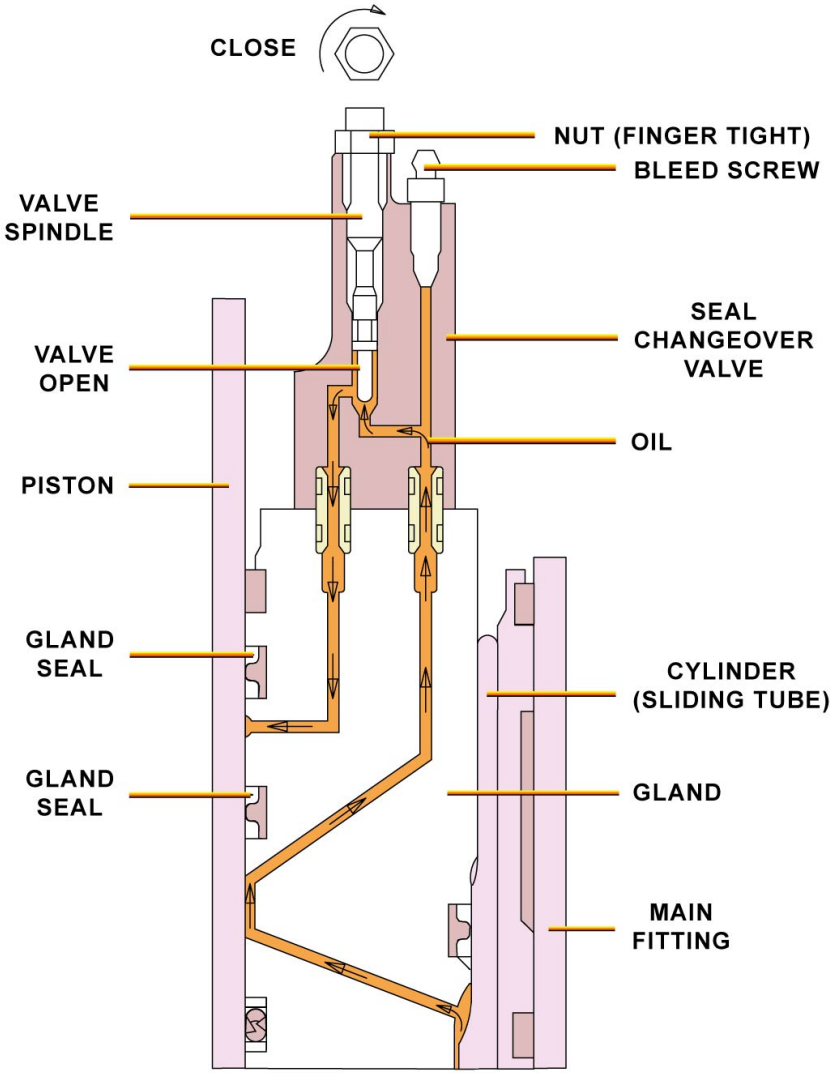

SEAL CHANGEOVER VALVE

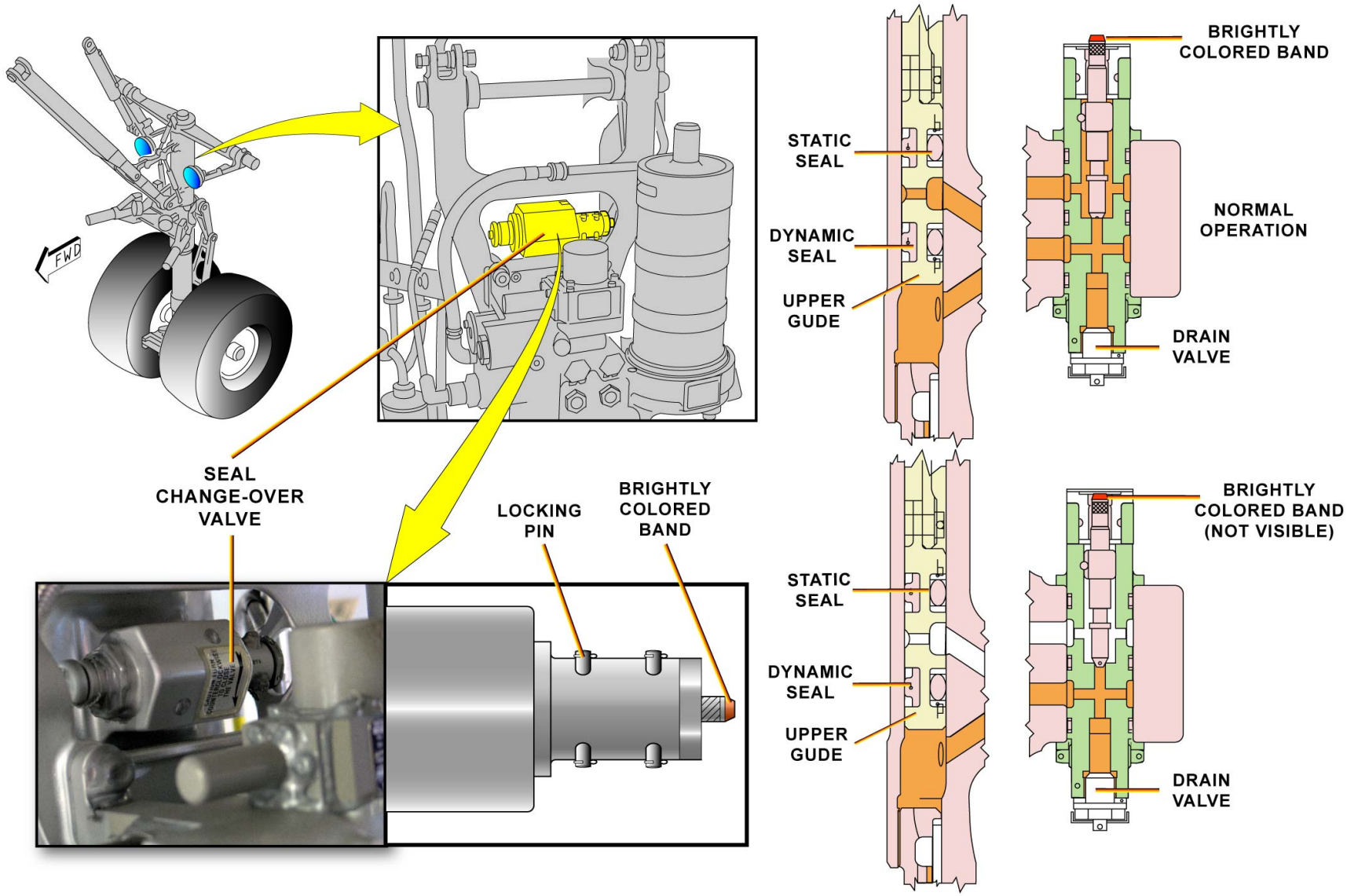

SEAL CHANGEOVER VALVE

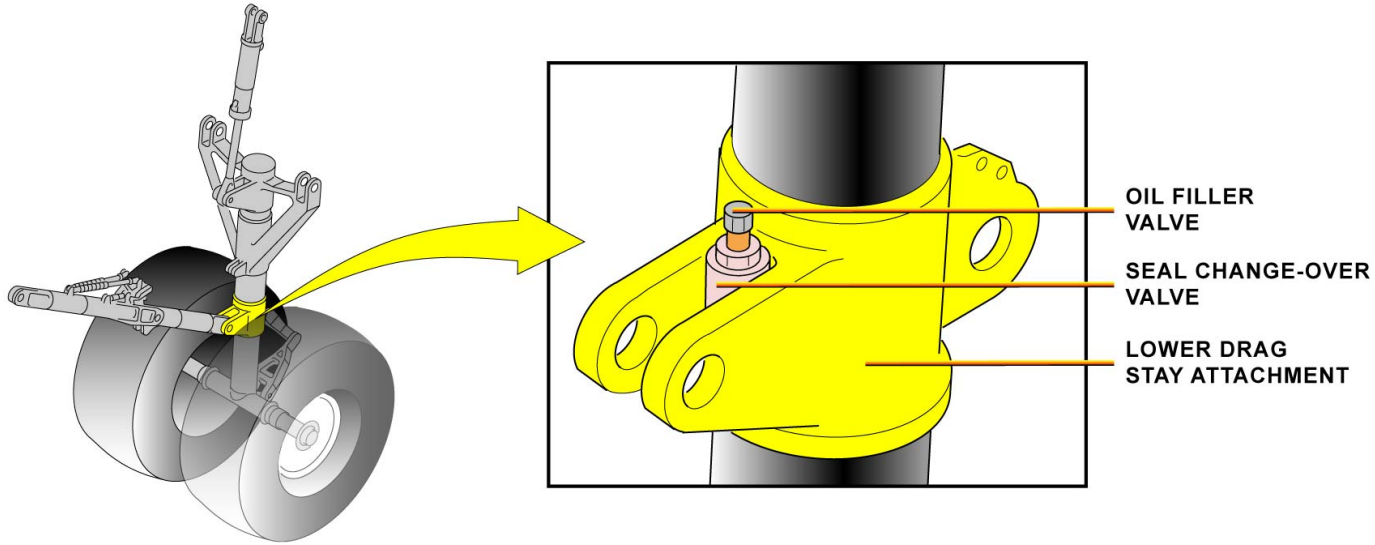

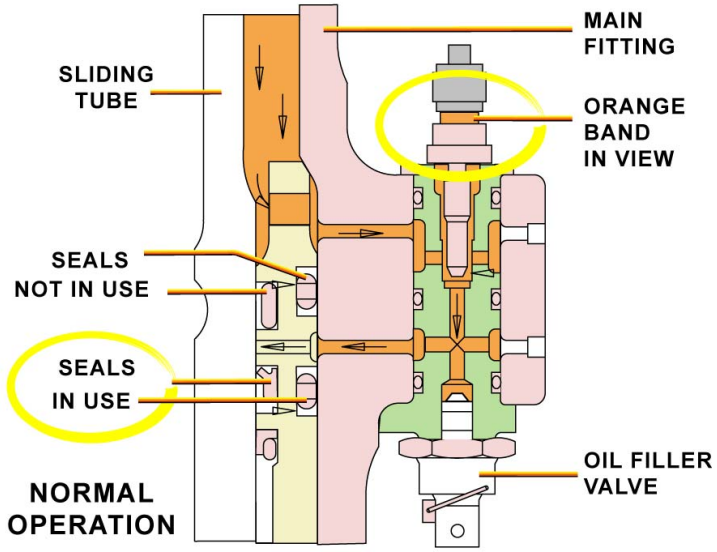

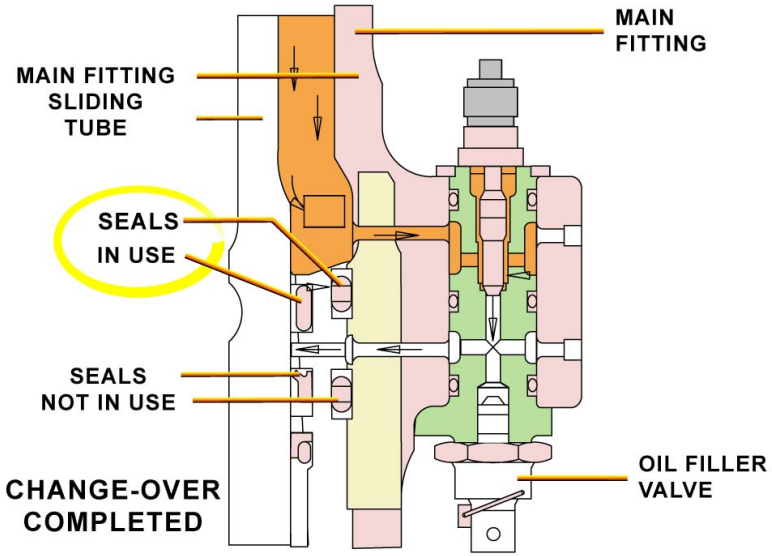

SEAL CHANGEOVER VALVE

G7508471 - G3NT1T0 - FM32D100000002

This Page Intentionally Left Blank

G7508471 - G3NT1T0 - FM32D1000000002

NORMAL EXTENSION AND RETRACTION D/O (3)

ELECTRICAL SYSTEM

An hydro-electrical system controls the operation of the L/G extension and retraction sequences. The system has two independently connected sub-systems, identified as SYSTEM 1 and SYSTEM 2 and these are electrically isolated from each other.
Each sub-system contains a Landing Gear Control and Interface Unit (LGCIU) and a number of proximity sensors. The proximity sensors are electronic position indicators and are installed on the mechanical components of each L/Gs and doors.
Both LGCIUs are continuously electrically supplied but only one LGCIU is active and controls the operation of the extension/retraction sequence. An LGCIU change-over occurs when gear UP is selected or if the active LGCIU fails. The LGCIU calculates the necessary door and gear configuration signals. It compares them with the configuration requested from the L/G control lever. It then sends the necessary signals to operate the selector valves which provide fluid to all gears and doors.
The LanDinG GEAR indicator displays green triangle when the corresponding gear is downlocked. The information is given by an independent circuitry for each gear. The signals go through LGCIU 1 position. The UNLK is in red when the corresponding gear is not locked (UP or DOWN).
The The LGCIU controls the operation of the baulk solenoid in the L/G control lever. After take-off, gear and bogie signals are sent to the LGCIUs. Each LGCIU sends a signal to release the baulk. The baulk solenoid stops the movement of the lever to the UP position:
- when the A/C is on the ground,
- when the L/G is not in the correct configuration for retraction.
The L/G system is equipped with an isolation safety valve. The isolation safety valve is de-energized closed when the A/C airspeed is more than 280 Kts. As a consequence, the L/G is isolated from the green hydraulic system and cannot be extended.

G7508471 - G3NT1T0 - FM32D200000003

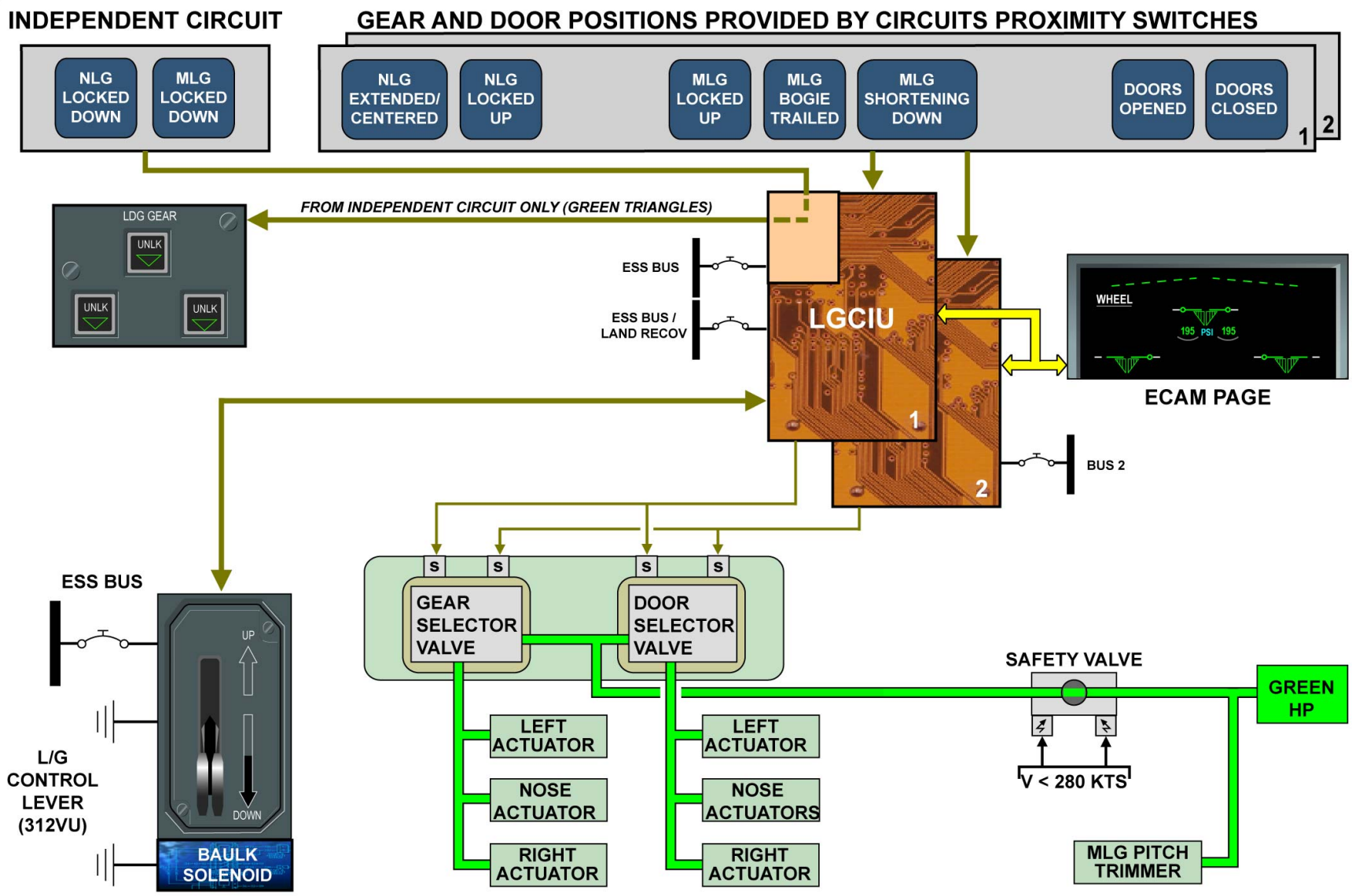

ELECTRICAL SYSTEM

G7508471 - G3NT1T0 - FM32D200000003

NORMAL EXTENSION AND RETRACTION D/O (3)

L/G EXTENSION AND RETRACTION SEQUENCES

The normal L/G extension and retraction sequences will be described.

GENERAL

The L/G operational sequence is controlled by the LGCIUs in response to information received from the proximity sensors. These signals are used to establish the current configuration of the L/G, either locked down or locked up, and the configuration of the door, either closed or fully open.
The configuration of the shock absorbers and bogie beams are also monitored. It enables the release of the L/G selector baulk during gear retraction or extension.

L/G LOCKED DOWN, DOORS CLOSED

For clarity purpose, the schematic sequence only displays the R/H gear and door operation (the principle is similar for the other gears and doors). The LGCIUs take into account the L/G lever position and the gears and doors position provided by the proximity sensors.
Here, the sequence starts with the LGCIU 2 active before a lever UP selection. Note: The Nose Wheel Steering (NWS) is hydraulically supplied by the door close circuit and 2 hydraulic fuses (which close in case of leak) are on the door open and close circuits.
When the L/G lever is in the DOWN position, the following conditions are maintained. The door selector valve DOOR CLOSED solenoid is energized and the DOOR CLOSED hydraulic lines are pressurized. All other solenoids are de-energized, and their corresponding hydraulic lines are depressurized.
Pressure in the DOOR CLOSED lines will maintain the doors in the closed position. The gear downlock remains in the overcentred locked down condition.

G7508471 - G3NT1T0 - FM32D200000003

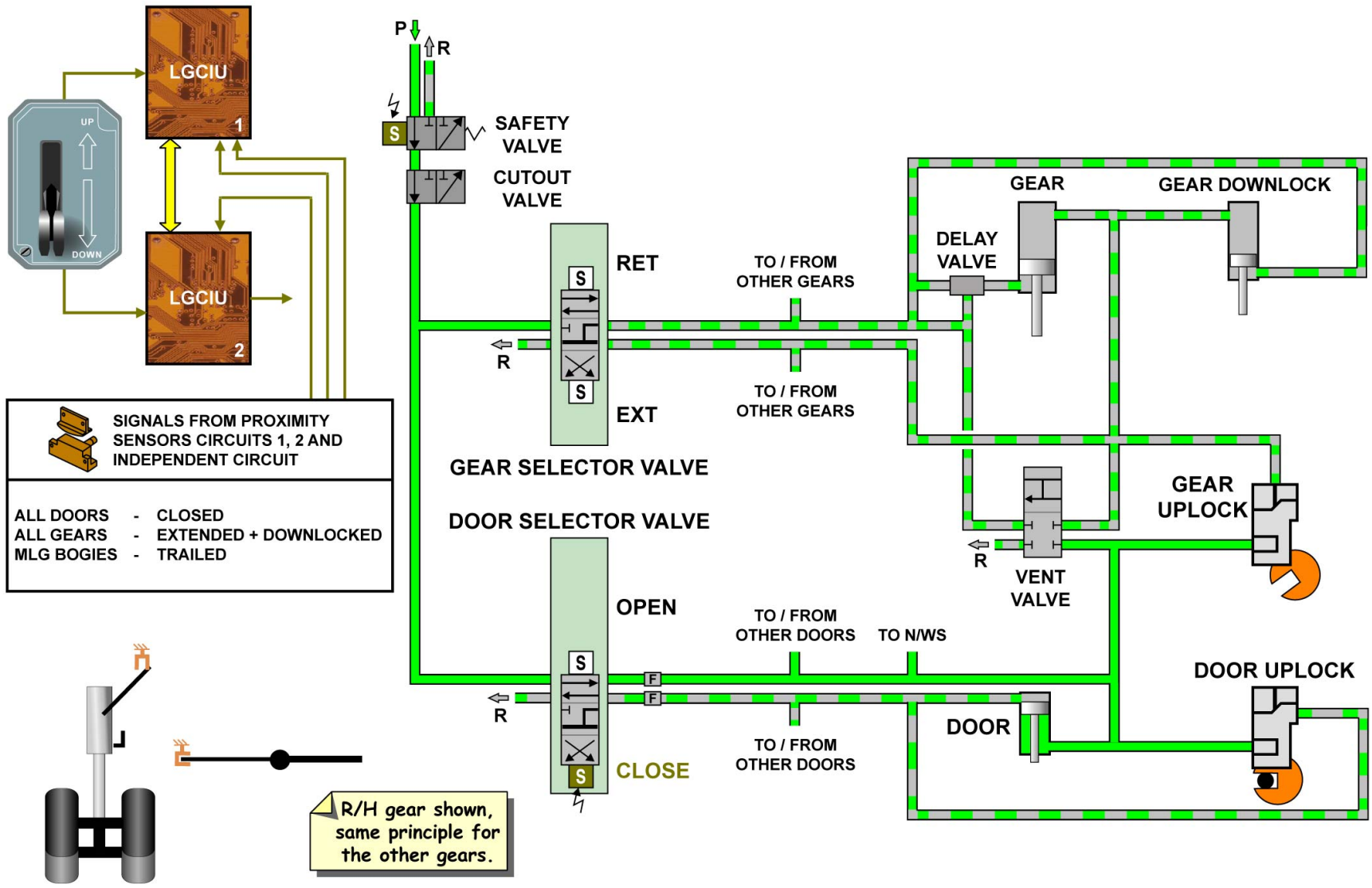

L/G EXTENSION AND RETRACTION SEQUENCES - GENERAL & L/G LOCKED DOWN, DOORS CLOSED

G7508471 - G3NT1T0 - FM32D200000003

NORMAL EXTENSION AND RETRACTION D/O (3)

L/G EXTENSION AND RETRACTION SEQUENCES (continued)

L/G LOCKED DOWN, DOORS OPENING

UP selection is made. Notice that LGCIU 1 is now active. The first step is to open the L/G doors. The door selector valve DOOR OPEN solenoid is energized and the DOOR OPEN hydraulic lines are pressurized.All other solenoids are de-energized, and their corresponding hydraulic lines are depressurized.
The pressure in the DOOR OPEN hydraulic lines will release the door uplocks, and cause the doors to open.

G7508471 - G3NT1T0 - FM32D200000003

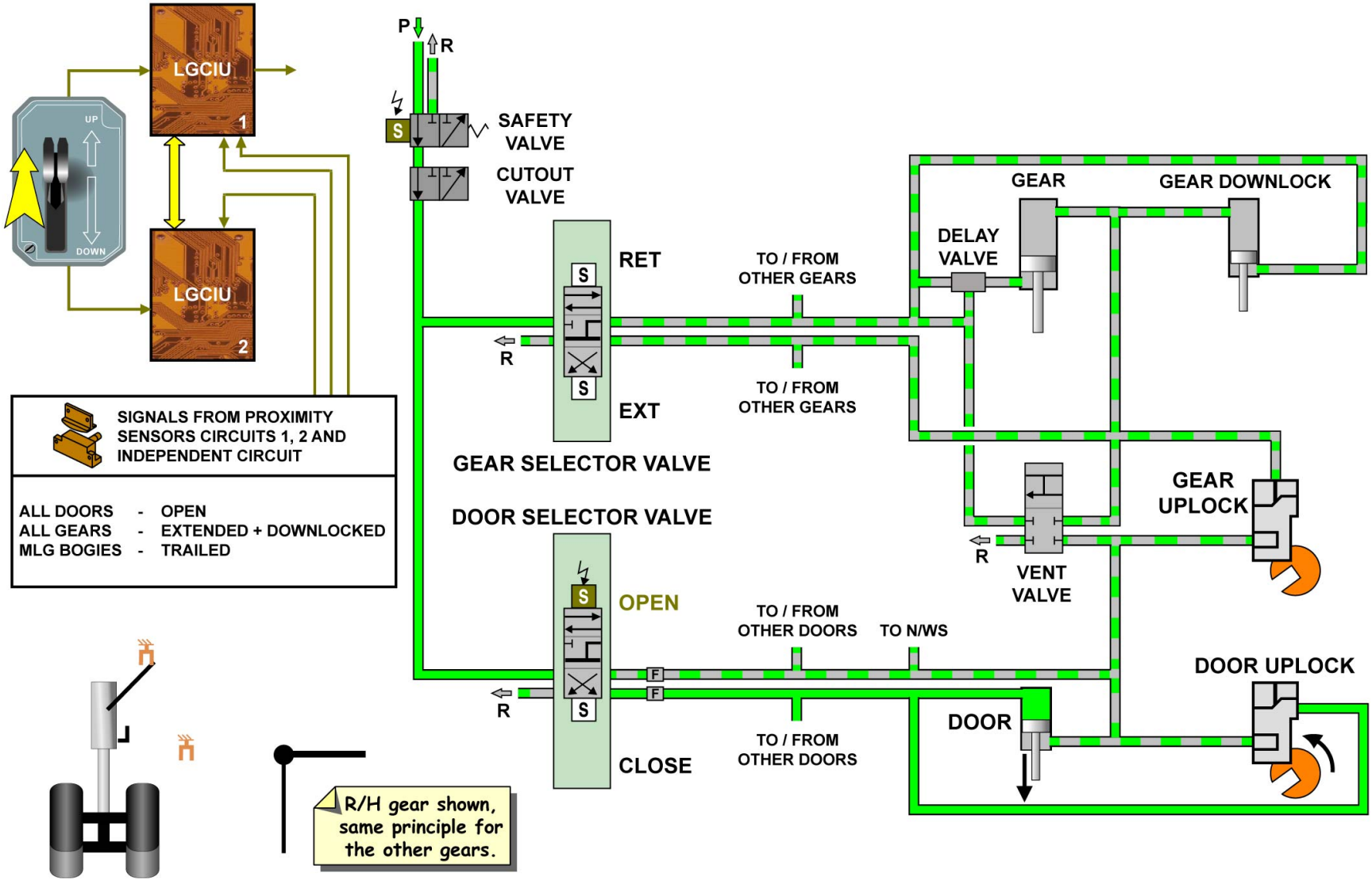

L/G EXTENSION AND RETRACTION SEQUENCES - L/G LOCKED DOWN, DOORS OPENING

NORMAL EXTENSION AND RETRACTION D/O (3)

L/G EXTENSION AND RETRACTION SEQUENCES (continued)

L/G RETRACTING, DOORS OPEN

The gear selector valve GEAR UP solenoid is energized, and the GEAR UP lines are pressurized .The landing gears are starting to retract. At this step, the delay valve retards the gear actuator from being supplied. This is to permit the gear downlock actuator to retract and thus to fold the side stay easily.
The door selector valve DOOR OPEN solenoid remains energized and the DOOR OPEN hydraulic lines are still pressurized.
All other solenoids are de-energized, and their corresponding hydraulic lines are depressurized.
The pressure in the DOOR OPEN hydraulic lines will keep the doors in the open position.. The pressure in the GEAR UP hydraulic lines will ensure the L/G downlocks are released. The L/G up-locks are maintained in the unlocked open position.

G7508471 - G3NT1T0 - FM32D200000003

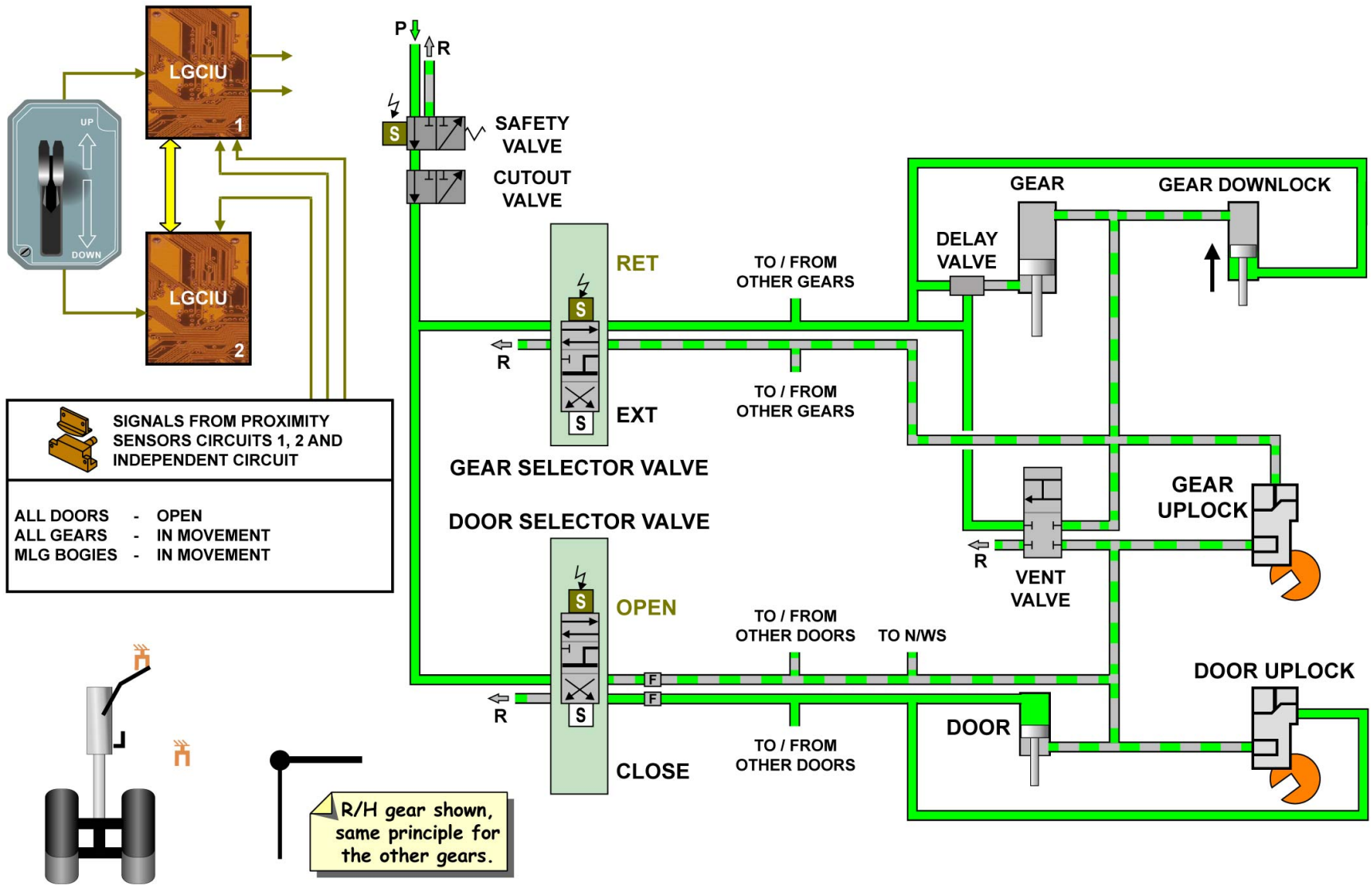

L/G EXTENSION AND RETRACTION SEQUENCES - L/G RETRACTING, DOORS OPEN

G7508471 - G3NT1T0 - FM32D200000003

NORMAL EXTENSION AND RETRACTION D/O (3)

L/G EXTENSION AND RETRACTION SEQUENCES (continued)

DOORS OPEN, AND L/G RETRACTS

The gear selector valve GEAR UP solenoid remains energized, and the GEAR UP lines are still pressurized. The door selector valve DOOR OPEN solenoid remains energized and the DOOR OPEN hydraulic lines are still pressurized. Each L/G has an uplock bearing which contacts the operating lever of the uplock assembly. This will cause mechanical engagement of the uplock hook.
All other solenoids are de-energized, and their corresponding hydraulic lines are depressurized.
The pressure in the DOOR OPEN hydraulic lines will keep the doors in the open position.

G7508471 - G3NT1T0 - FM32D200000003

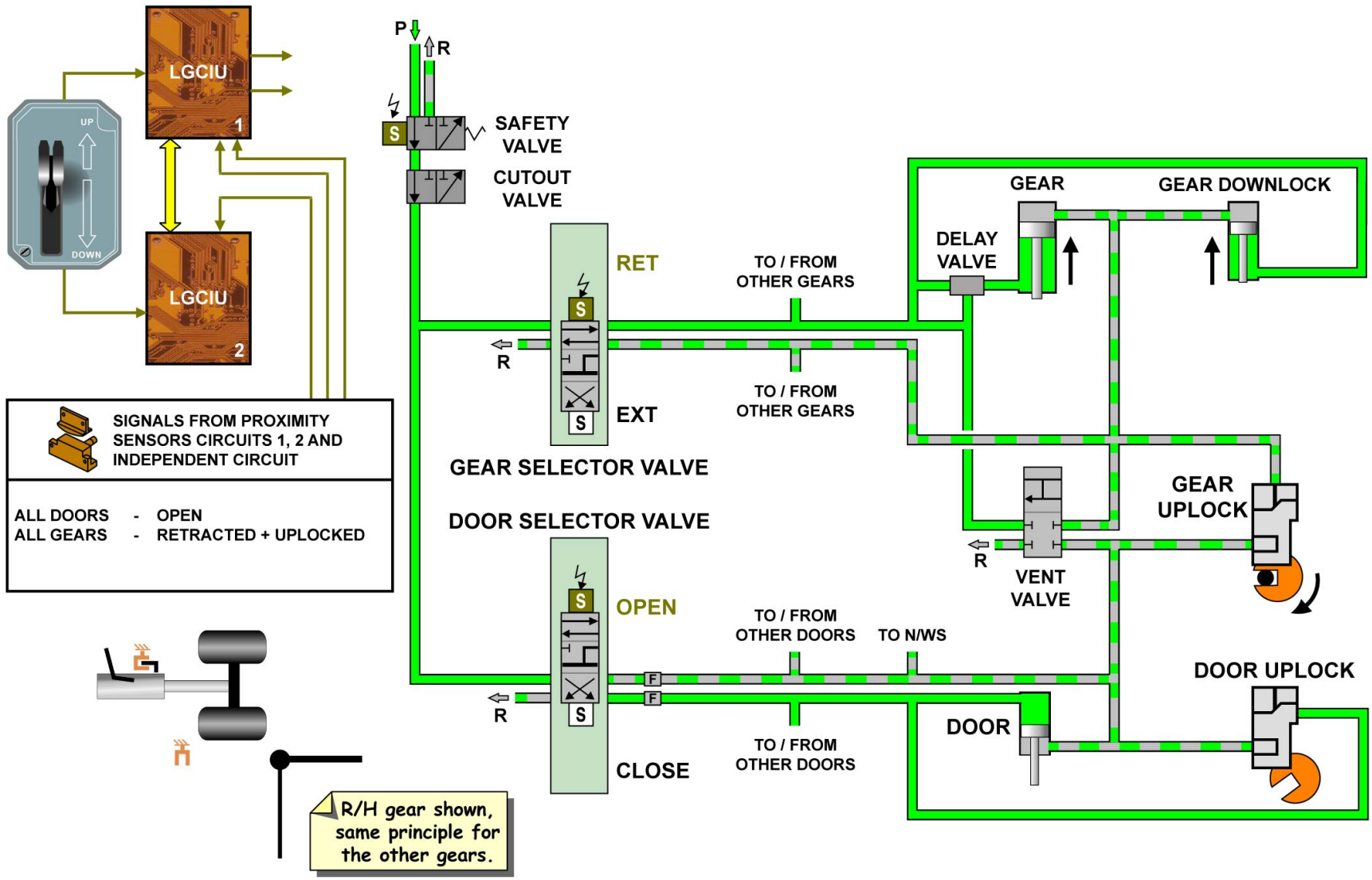

L/G EXTENSION AND RETRACTION SEQUENCES - DOORS OPEN, AND L/G RETRACTS

G7508471 - G3NT1T0 - FM32D200000003

NORMAL EXTENSION AND RETRACTION D/O (3)

L/G EXTENSION AND RETRACTION SEQUENCES (continued)

L/G LOCKED UP, DOORS CLOSING

The door selector valve DOOR CLOSE solenoid is energized, the DOOR CLOSE hydraulic lines are pressurized and the doors move towards the closed position. The door uplock bearing makes contact with the operating lever of the uplock assembly. It causes a mechanical engagement of the door uplock hook.
The gear selector valve GEAR UP solenoid remains energized, and the GEAR UP lines remain pressurized.
All other solenoids are de-energized, and their corresponding hydraulic lines are depressurized.
The pressure in the GEAR UP hydraulic lines will ensure the L/G remains in the UP condition.

G7508471 - G3NT1T0 - FM32D200000003

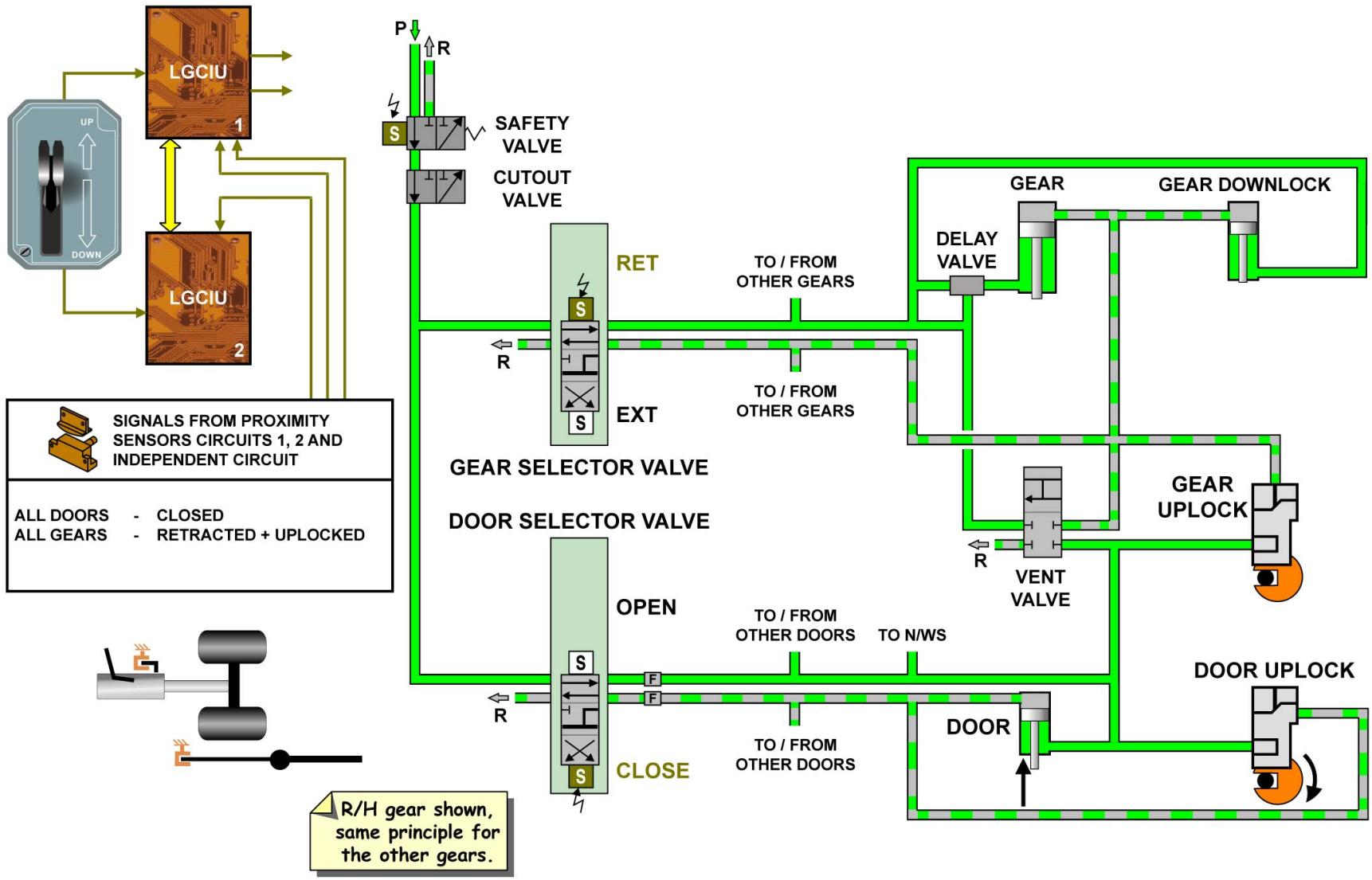

L/G EXTENSION AND RETRACTION SEQUENCES - L/G LOCKED UP, DOORS CLOSING

G7508471 - G3NT1T0 - FM32D200000003

NORMAL EXTENSION AND RETRACTION D/O (3)

L/G EXTENSION AND RETRACTION SEQUENCES (continued)

L/G LOCKED UP, DOORS CLOSED

The door selector valve DOOR CLOSE solenoid remains energized and the DOOR CLOSE hydraulic lines remain pressurized.
All other solenoids are de-energized, and their corresponding hydraulic lines are depressurized.

G7508471 - G3NT1T0 - FM32D200000003

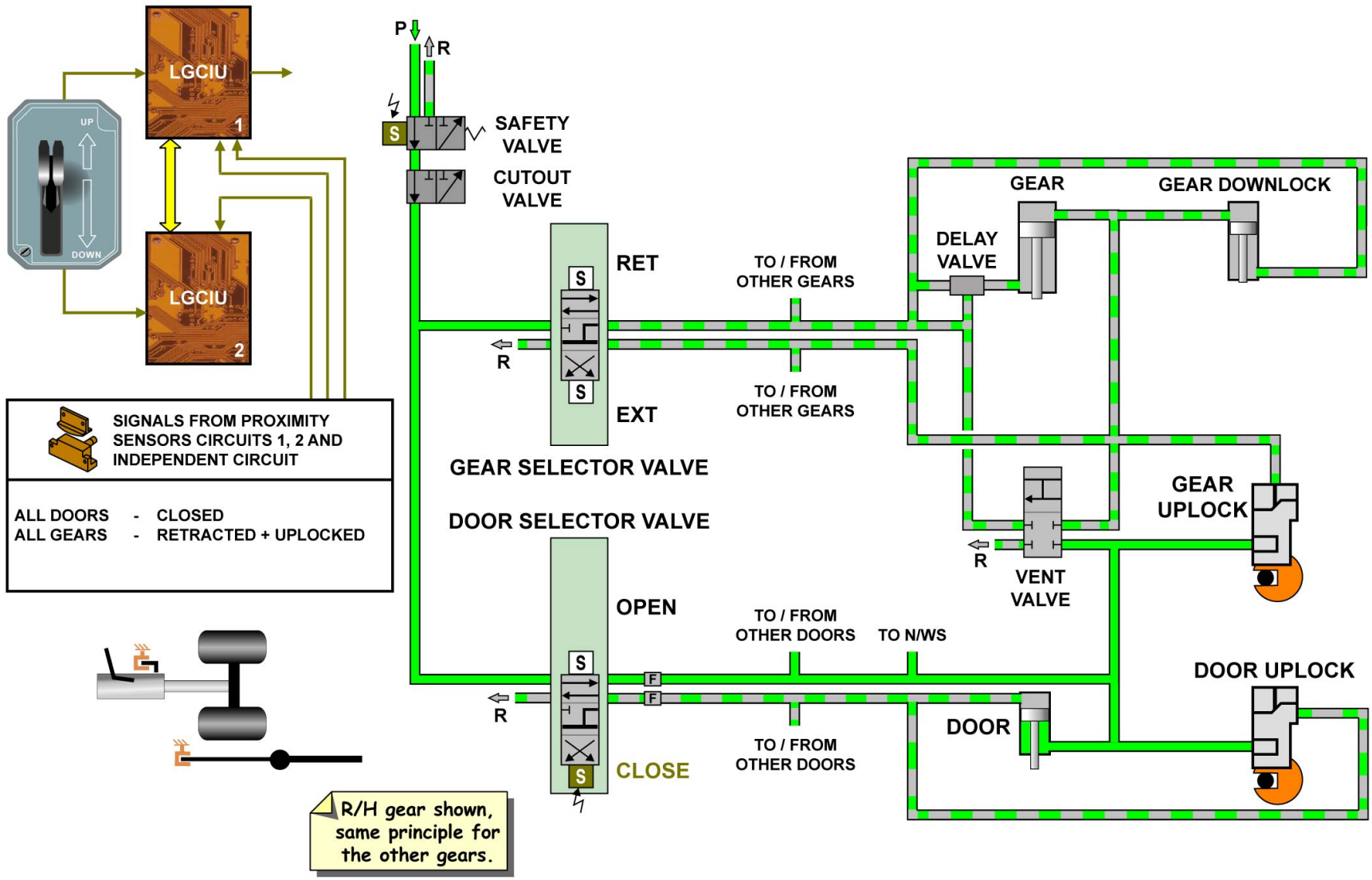

L/G EXTENSION AND RETRACTION SEQUENCES - L/G LOCKED UP, DOORS CLOSED

G7508471 - G3NT1T0 - FM32D200000003

NORMAL EXTENSION AND RETRACTION D/O (3)

L/G EXTENSION AND RETRACTION SEQUENCES (continued)

ABOVE 280 KTS

The pressure in the DOOR CLOSE hydraulic lines keeps the doors in the closed position. If the A/C speed exceeds 280 Kts, the green supply is isolated by the safety valve, and only the door uplocks ensure the doors remain in the closed position.

NOTE: The safety valve operation is possible thanks to the ADIRUs speed signal. On the ground, if the ADIRus are not aligned, the safety valve solenoid valve is energized OPEN by the LGCIUs or the Electrical Ground Power availability. In flight, above 280 knots, the safety valve solenoid is de-energized CLOSED.

G7508471 - G3NT1T0 - FM32D200000003

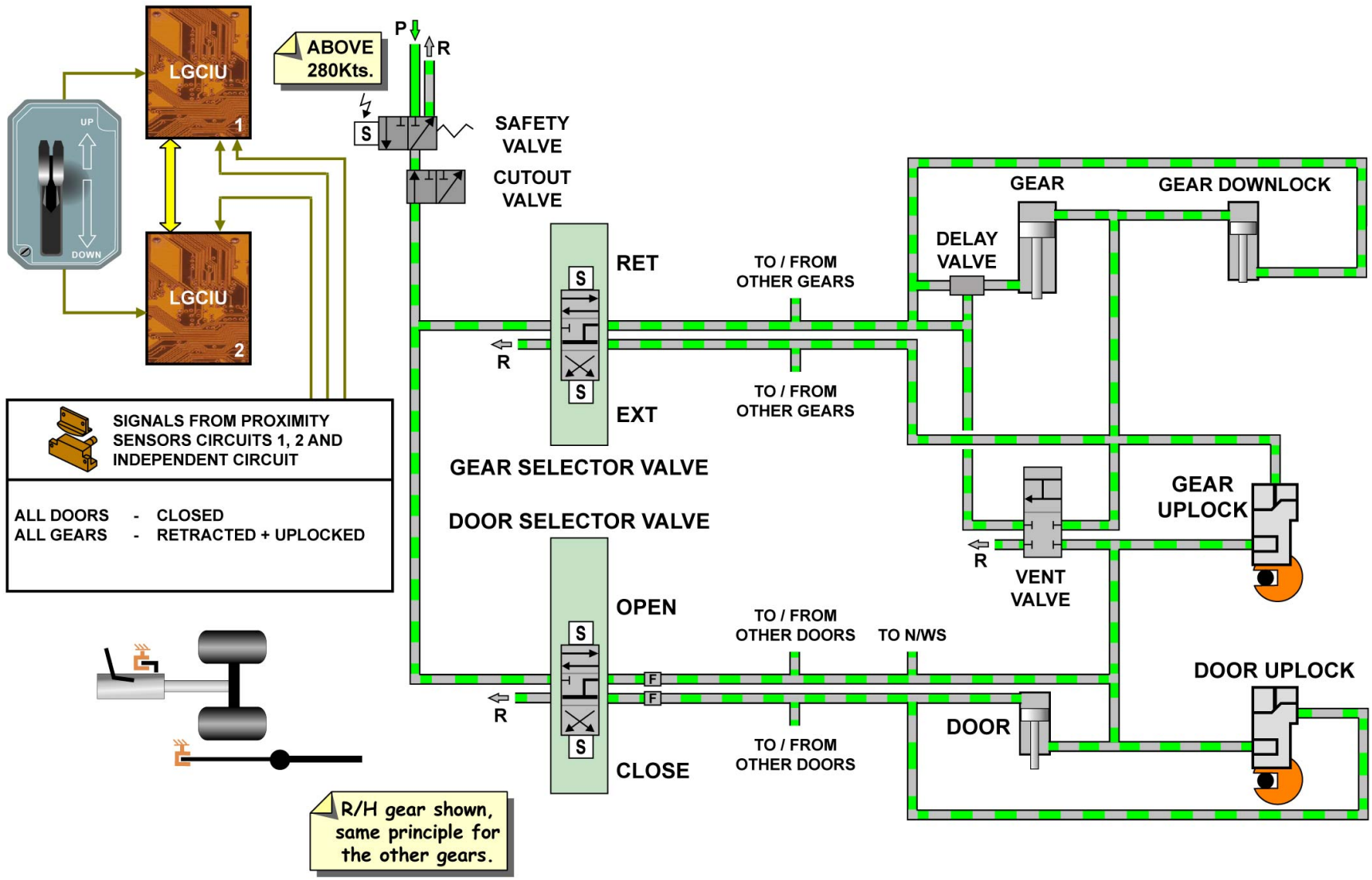

L/G EXTENSION AND RETRACTION SEQUENCES - ABOVE 280 KTS

G7508471 - G3NT1T0 - FM32D200000003

NORMAL EXTENSION AND RETRACTION D/O (3)

L/G EXTENSION AND RETRACTION SEQUENCES (continued)

L/G LOCKED UP, DOORS OPENING

Below 280 knots, when a DOWN selection is made, the safety valve solenoid is re-energized OPEN. The door selector valve DOOR OPEN solenoid is energized and the DOOR OPEN hydraulic lines are pressurized. All other solenoids de-energized.
All other solenoids are de-energized, and their corresponding hydraulic lines are depressurized.
The pressure in the DOOR OPEN hydraulic lines will unlock the door uplocks and open the doors.

G7508471 - G3NT1T0 - FM32D200000003

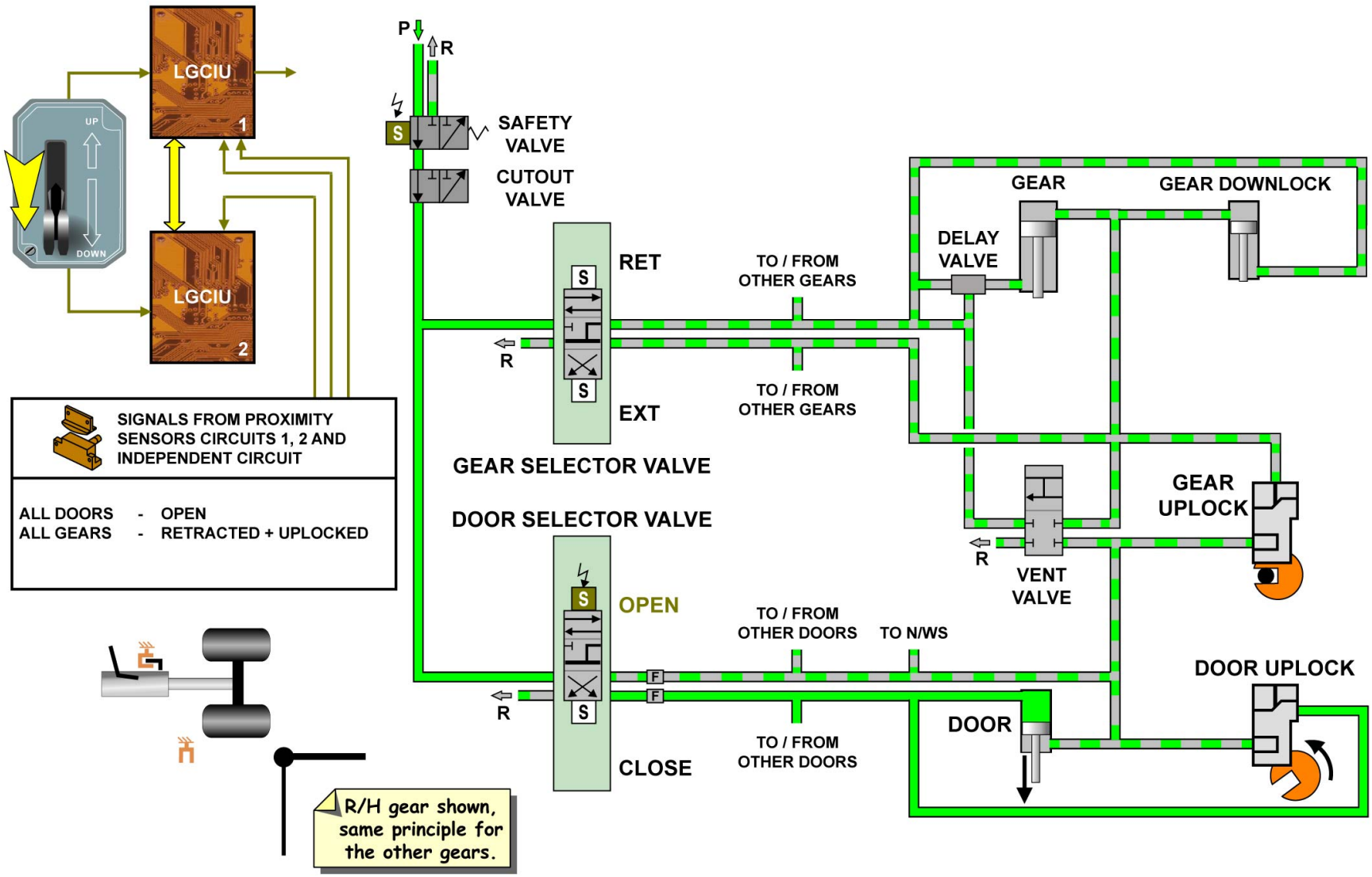

L/G EXTENSION AND RETRACTION SEQUENCES - L/G LOCKED UP, DOORS OPENING

G7508471 - G3NT1T0 - FM32D200000003

NORMAL EXTENSION AND RETRACTION D/O (3)

L/G EXTENSION AND RETRACTION SEQUENCES (continued)

DOORS OPEN, L/G EXTENDS

Once all doors are sensed fully opened, the LGCIU carries on to extend the gear. The gear selector valve GEAR DOWN solenoid is energized, and the GEAR DOWN lines are pressurized.
The door selector valve DOOR OPEN solenoid remains energized and the DOOR OPEN hydraulic line is kept pressurized.
All other solenoids are de-energized, and their corresponding hydraulic lines are depressurized.
The pressure in the DOOR OPEN hydraulic lines keeps the doors open.
The pressure in the GEAR DOWN lines will release the L/G uplocks and cause the L/G actuators to extend.

G7508471 - G3NT1T0 - FM32D200000003

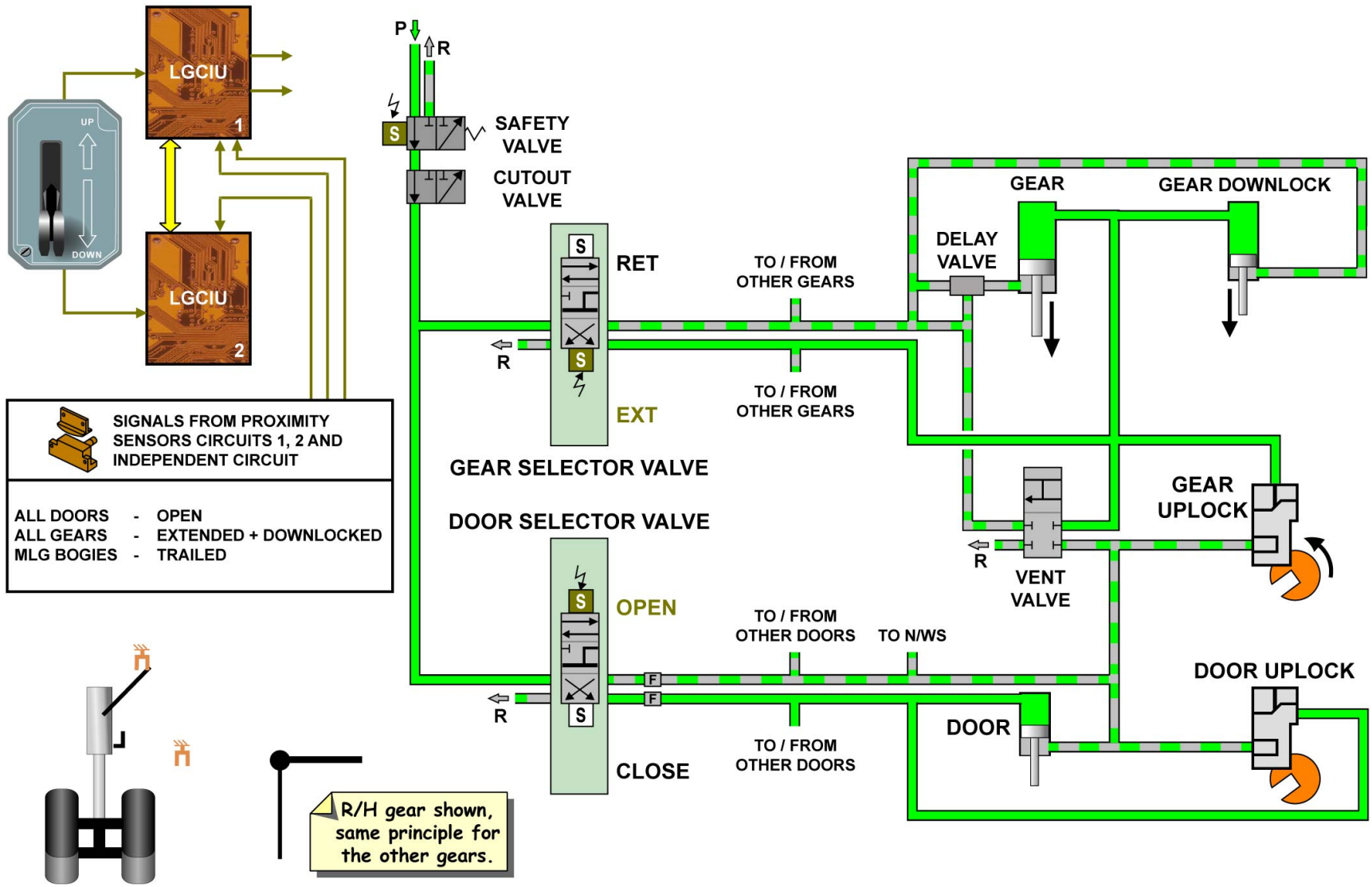

L/G EXTENSION AND RETRACTION SEQUENCES - DOORS OPEN, L/G EXTENDS

G7508471 - G3NT1T0 - FM32D200000003

NORMAL EXTENSION AND RETRACTION D/O (3)

L/G EXTENSION AND RETRACTION SEQUENCES (continued)

L/G LOCKED DOWN, DOORS CLOSING

The door selector valve DOOR CLOSE solenoid is energized and the DOOR CLOSE hydraulic lines are pressurized. The door uplock bearing makes contact with the operating lever of the uplock assembly. It causes a mechanical engagement of the door uplock hook. The gear selector valve GEAR DOWN solenoid remains energized, and the GEAR DOWN lines remain pressurized until the doors are fully closed. All other solenoids de-energized.

G7508471 - G3NT1T0 - FM32D200000003

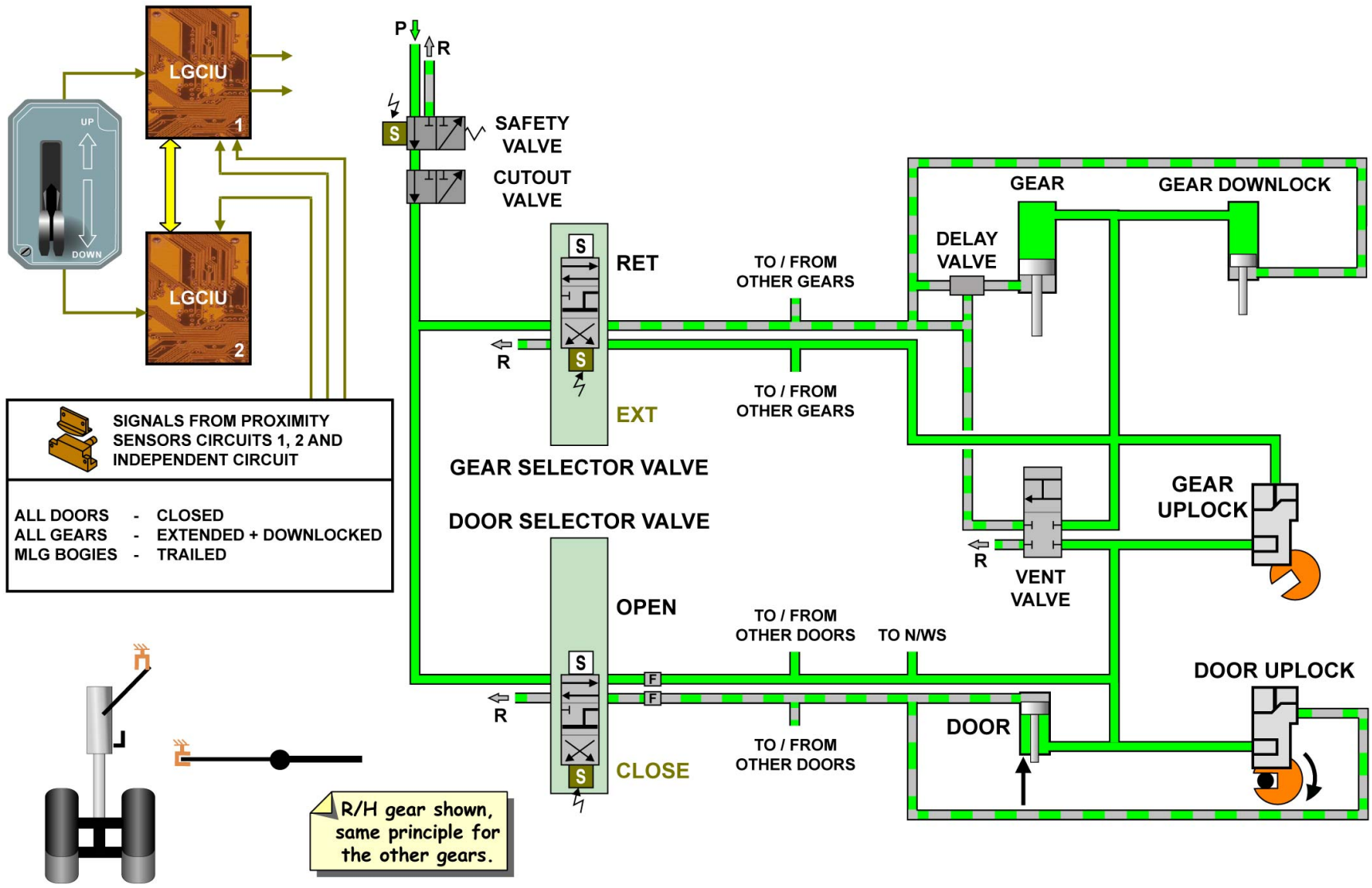

L/G EXTENSION AND RETRACTION SEQUENCES - L/G LOCKED DOWN, DOORS CLOSING

G7508471 - G3NT1T0 - FM32D200000003

NORMAL EXTENSION AND RETRACTION D/O (3)

L/G EXTENSION AND RETRACTION SEQUENCES (continued)

L/G LOCKED DOWN

Pressure in the DOOR CLOSED lines will maintain the doors in the closed position. The gear downlock remains in the overcentred locked down condition. All other solenoids are de-energized, and their corresponding hydraulic lines are depressurized.

G7508471 - G3NT1T0 - FM32D200000003

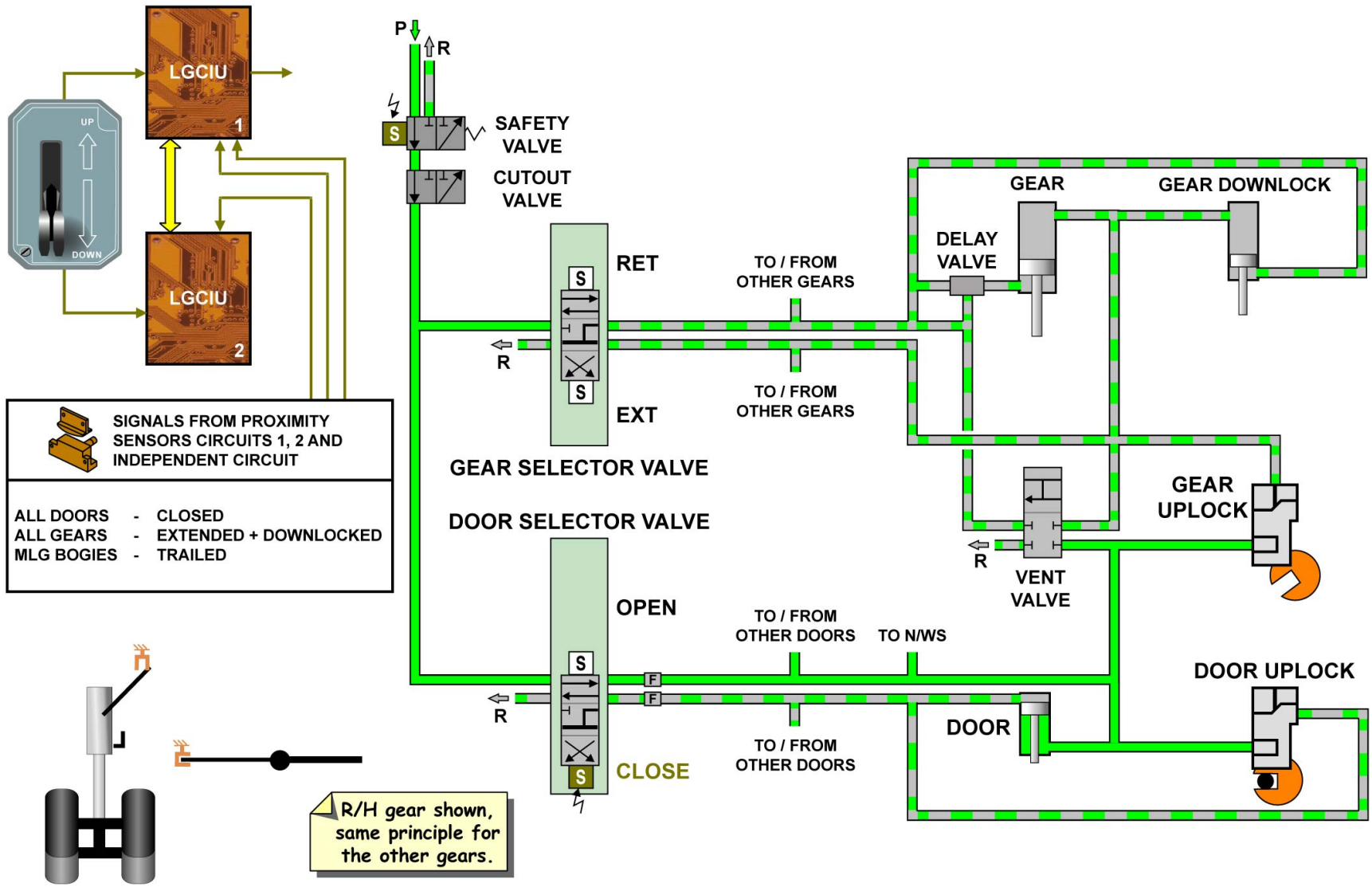

L/G EXTENSION AND RETRACTION SEQUENCES - L/G LOCKED DOWN

G7508471 - G3NT1T0 - FM32D200000003

FREE FALL EXTENSION D/O (3)

ELECTRICAL SYSTEM

The electrical actuators operate the free fall extension system. They release the MLG and the NLG door and gear uplocks through the mechanical system.
The A/C batteries supply 28 VDC through two hot bus bars. There are two independent circuits between the bus bars and the free-fall actuators. Usually the circuits are energized at the same time, but each circuit will operate the free-fall electrical actuators (at half speed) if the other circuit is not available.
Each circuit has a lock-toggle type switch, each switch operates a motor in the L/G free-fall electrical actuator. A ganging bar connects the two switches together.
It is possible to move the ganging bar away from the switches (during maintenance) and operate the switches independently.

MLG MECHANICAL SYSTEM

In the right MLG bay a linkage connects the free-fall actuator to the cut-out valve.
The linkage also connects, through the cut-out valve to the vent valve, the MLG uplock and the MLG door uplock. When the output shaft of the free-fall actuator turns, it moves the linkage, which operates the valves and opens the door and gear uplocks.
The left MLG configuration is almost the same as the right MLG, but does not include a cut-out valve.

NLG MECHANICAL SYSTEM

In the NLG bay, a linkage connects the free-fall actuator to the vent valve and the NLG uplock. A flexible cable connects the free-fall actuator to the NLG door uplock. When the output shaft of the free-fall actuator turns, it moves the linkages and flexible cable, which operates the vent valve and opens the door and gear uplocks.

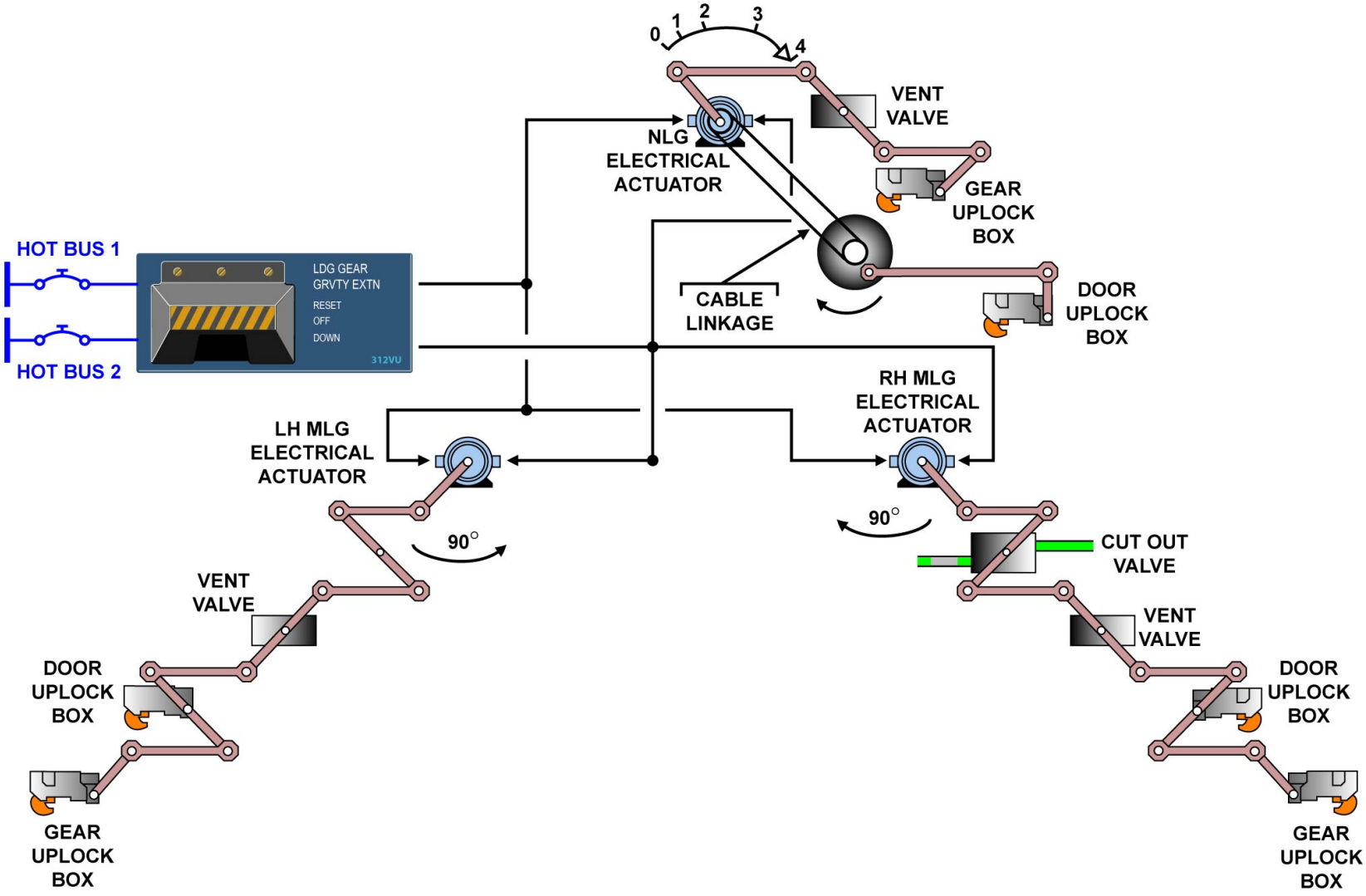

ELECTRICAL SYSTEM ... NLG MECHANICAL SYSTEM

FREE FALL EXTENSION D/O (3)

OPERATION

-In this scenario, we assume a dual LGCIU failure.
Landing gear lever is set to down. This is to avoid nuisance messages.

CAUTION: The free fall extension system can be operated with the A/C not electrically powered (the hot buses supply the electrical actuators). Normally both motors are energized together and the actuators reach full travel in approximately ten seconds.

G7508471 - G3NT1T0 - FM32D300000003

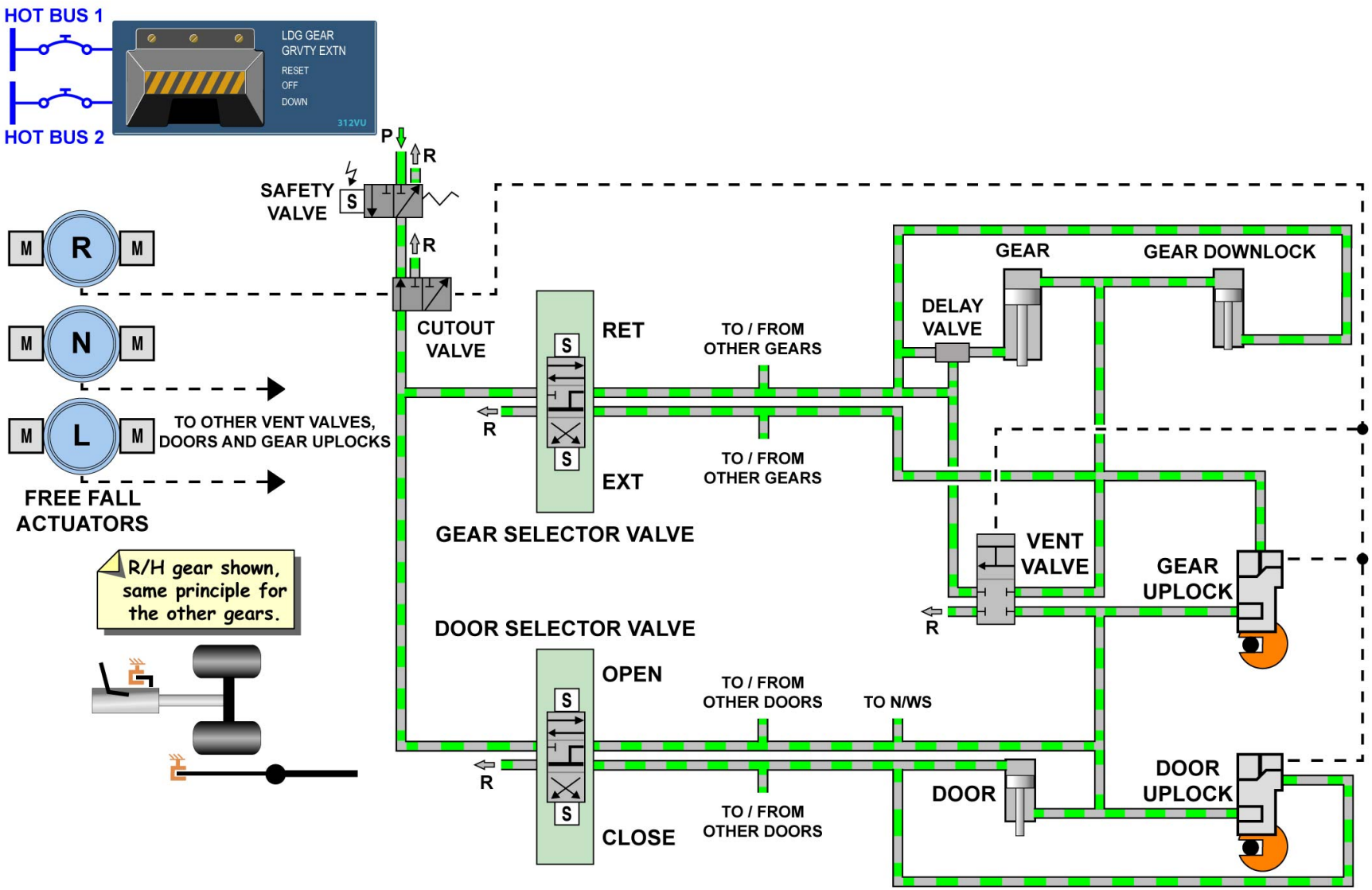
HOT BUS 1
HOT BUS 2
LDG GEAR
GRVTY EXTN
RESET
OFF
DOWN
312VU
P
R
SAFETY VALVE
S
R
M
R
M
M
N
M
M
L
M
TO OTHER VENT VALVES, DOORS AND GEAR UPLOCKS
FREE FALL ACTUATORS
CUTOUT VALVE
RET
EXT
GEAR SELECTOR VALVE
TO / FROM OTHER GEARS
TO / FROM OTHER GEARS
GEAR
GEAR DOWNLOCK
DELAY VALVE
VENT VALVE
GEAR UPLOCK
R/H gear shown, same principle for the other gears.
DOOR SELECTOR VALVE
OPEN
CLOSE
TO / FROM OTHER DOORS
TO N/WS
TO / FROM OTHER DOORS
DOOR
DOOR UPLOCK

OPERATION

FREE FALL EXTENSION D/O (3)

OPERATION (continued)

RELEASE

When the LDG GEAR free-fall switches are set to DOWN, the electrical actuators are energized. The actuators turn the output shaft and move the mechanical linkage to operate the hydraulic and mechanical components in sequence as follows:
- (1) the cut-out valve operates. This isolates the whole L/G system from the green hydraulic supply,
- (2) the vent valves operate, connecting all gear and door actuators to the green hydraulic system return,
- (3) the door uplock boxes operate, releasing the hook,
- (4) the gear uplock boxes operate and the gear falls down by gravity.

During this sequence, the electrical actuators operate the output shaft from the 0 degree position to the 90 degrees position.

WARNING: After a free fall landing, the first maintenance action is to install gear safety pins and set all the ground opening handles down.

RESET

When RESET is selected, the actuators turn back to their initial positions and automatically set the system back to the normal extension and retraction mode. The actuator output shaft moves by 90 degrees in reverse direction.
Upon completion of the reset, the hydraulic pressure is restored. Doors are pressurized open while the L/G is retracted and then the doors close. The switches are set to OFF after the system goes back to the normal extension and retraction mode.

G7508471 - G3NT1T0 - FM32D300000003

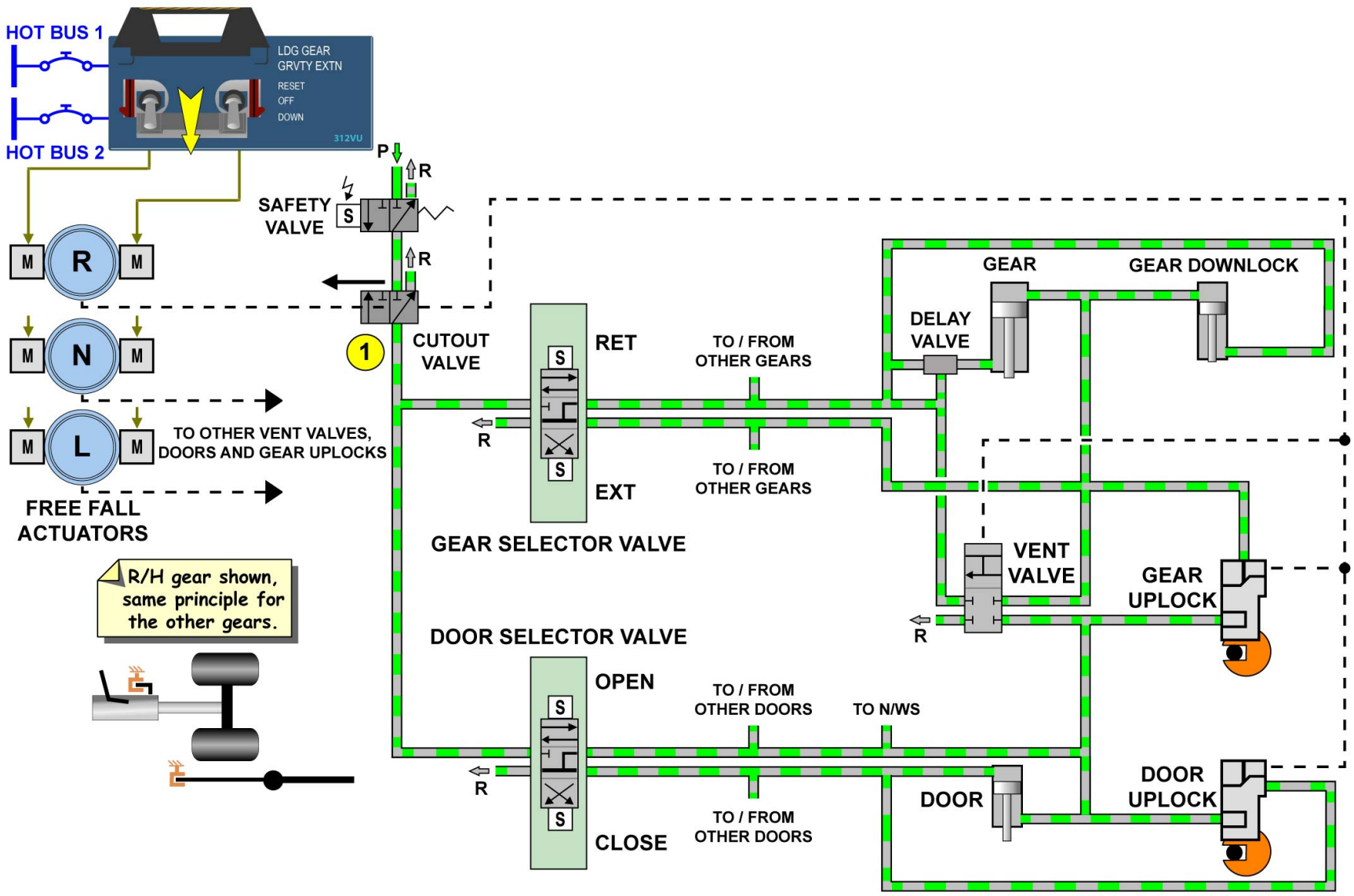

OPERATION - RELEASE & RESET

G7508471 - G3NT1T0 - FM32D300000003

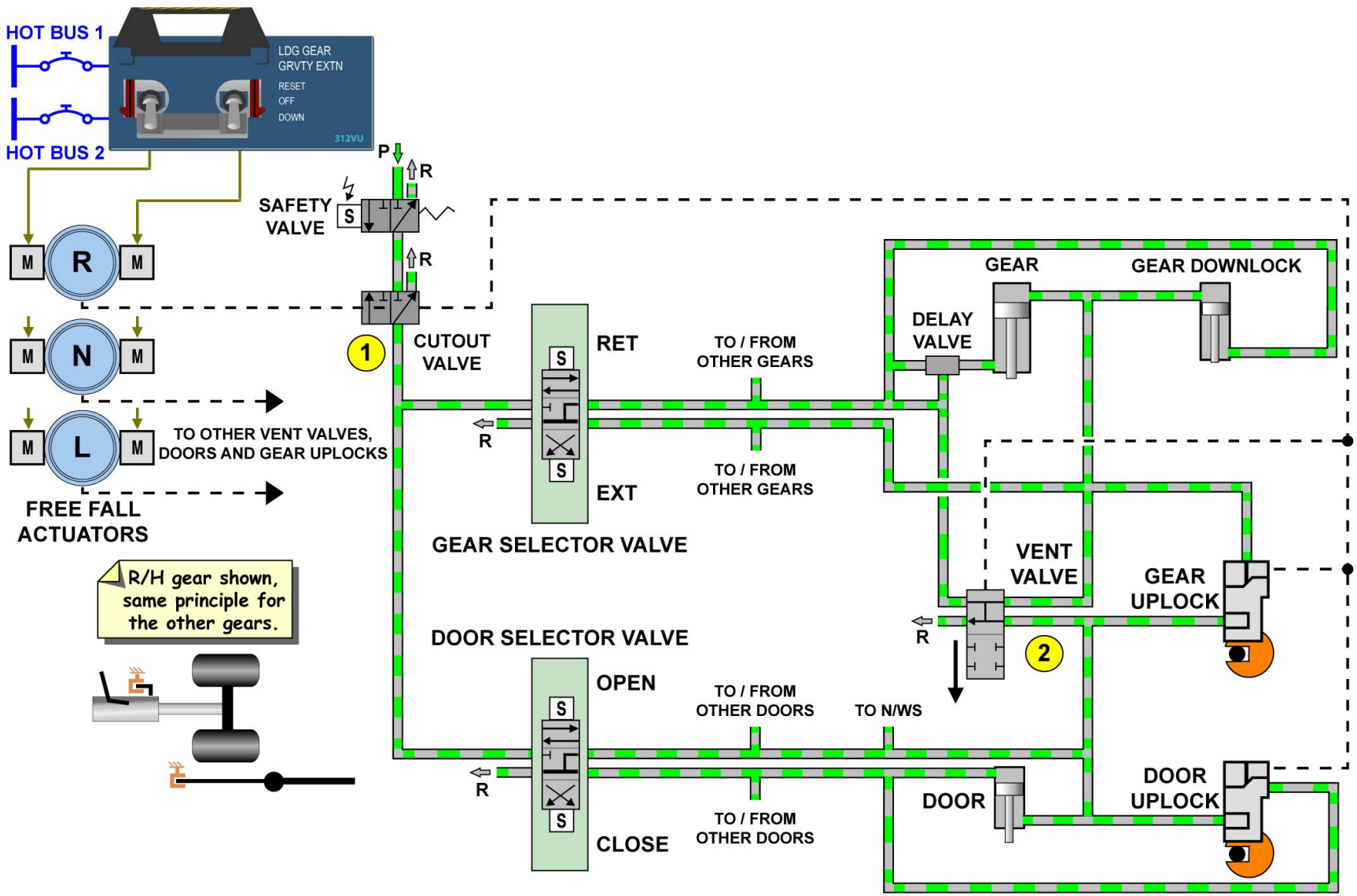

OPERATION - RELEASE & RESET

G7508471 - G3NT1T0 - FM32D300000003

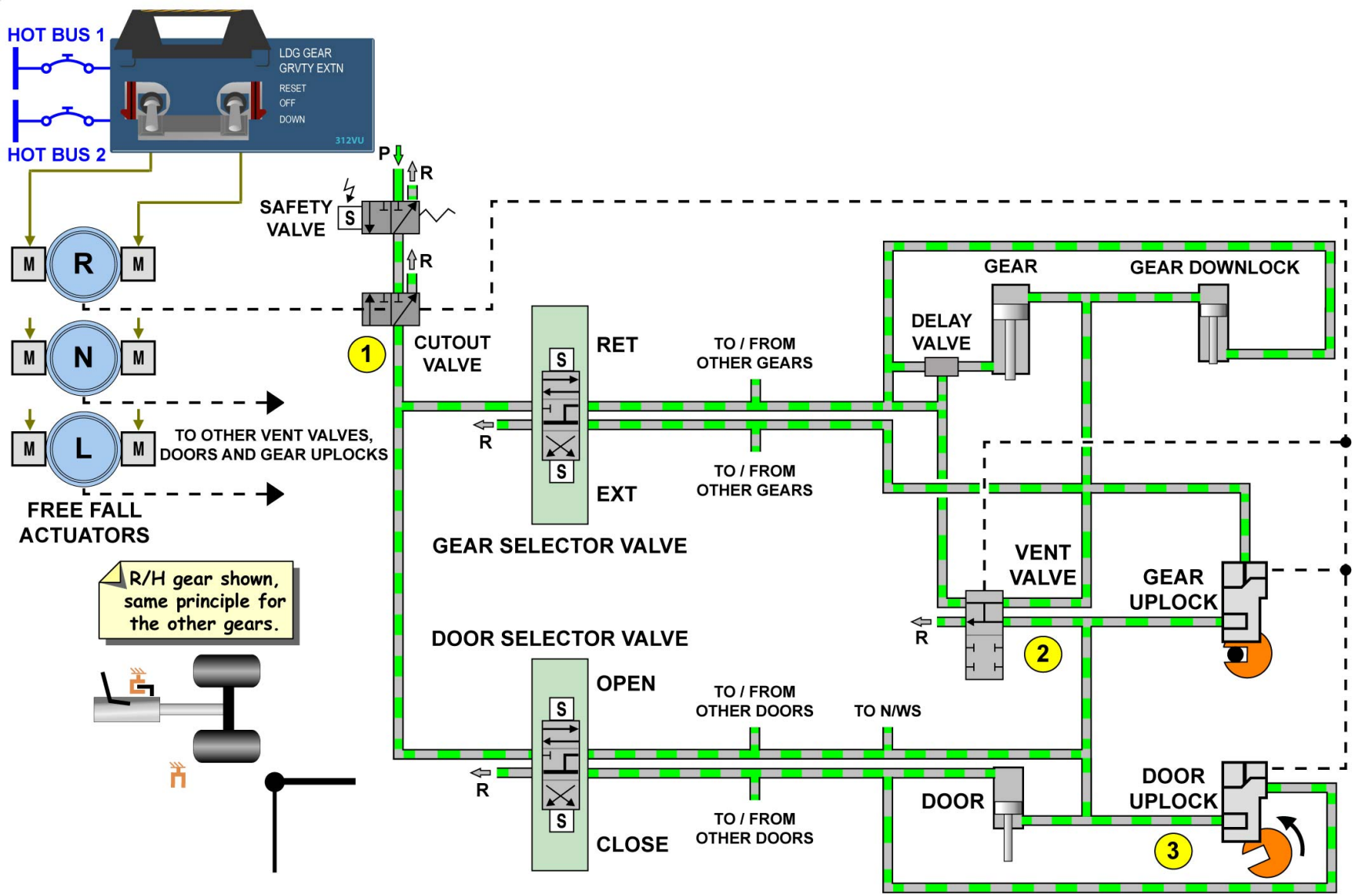

OPERATION - RELEASE & RESET

G7508471 - G3NT1T0 - FM32D300000003

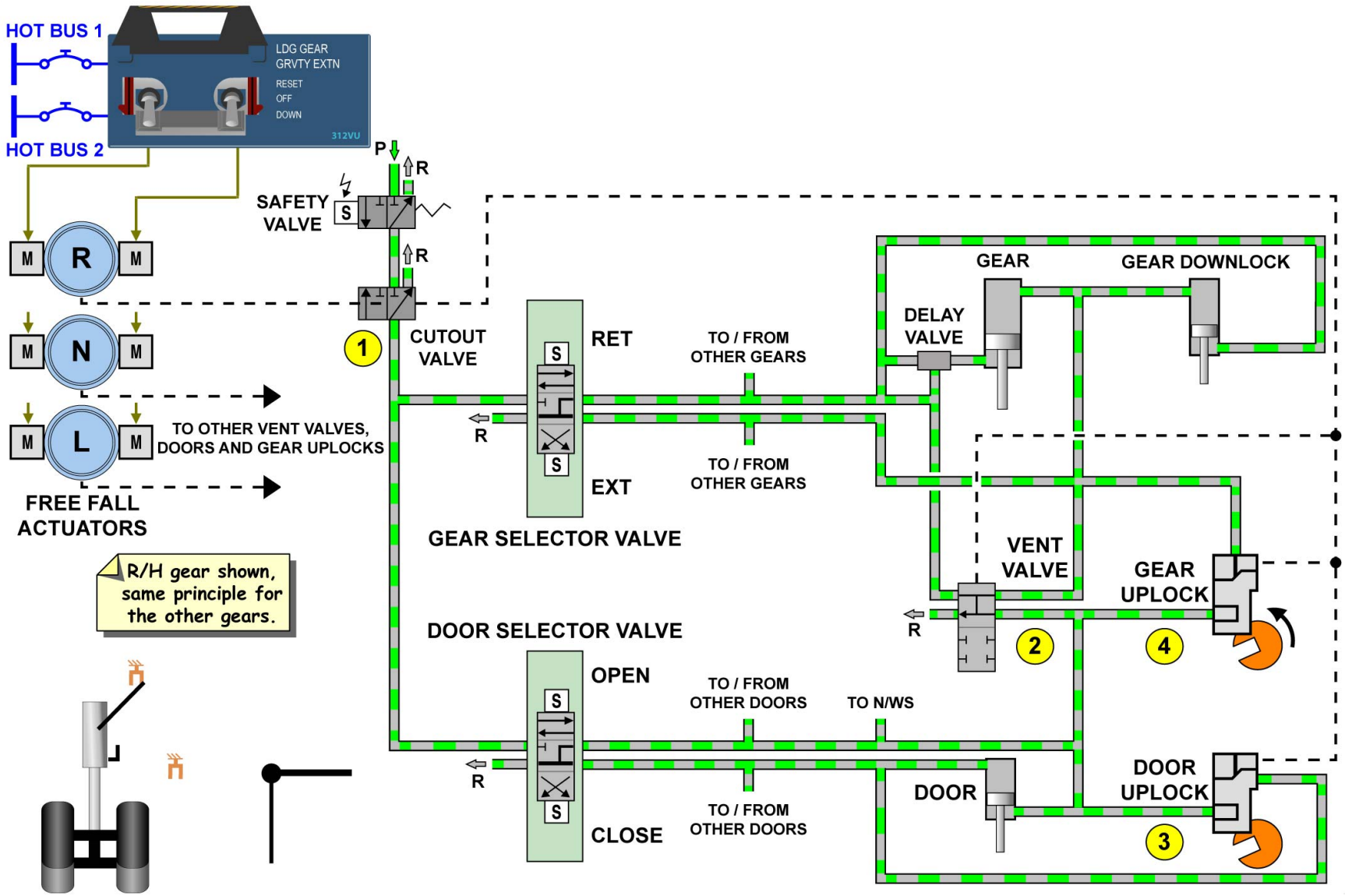

OPERATION - RELEASE & RESET

G7508471 - G3NT1T0 - FM32D300000003

This Page Intentionally Left Blank

G7508471 - G3NT1T0 - FM32D300000003

DOOR GROUND OPENING D/O (3)

DESCRIPTION

MAIN LANDING GEAR

The MLG door ground-opening control handle is accessible through a panel located at the center fuselage, forward the MLG door. This location gives the operator a safe position and a clear view of the door travel. The control handle is connected, through a push-pull cable, to a layshaft at the outboard side of MLG bay.
Each door has a door ground opening mechanism that enables door opening for maintenance. The mechanism has these following primary components:
- a control handle,
- a bi-stable mechanism,
- a bypass valve,
- a release mechanism in the door uplock.

The control handle has two lockable positions. When it is set to the DOOR OPEN position, it causes the mechanical system to:
- operate the door bypass valve,
- release the door from its uplock.

The bi-stable mechanism is attached to the operating shaft of the bypass valve. It makes sure that the bypass valve and the control handle can only stay in the doors FULLY OPEN position or the doors FULLY CLOSED position.

G7508471 - G3NT1T0 - FM32D400000003

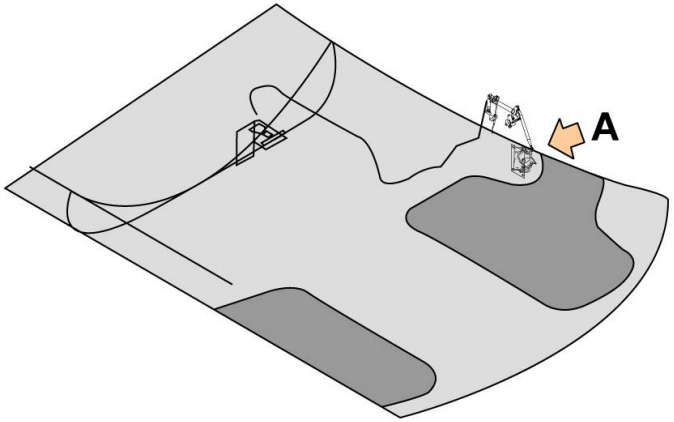

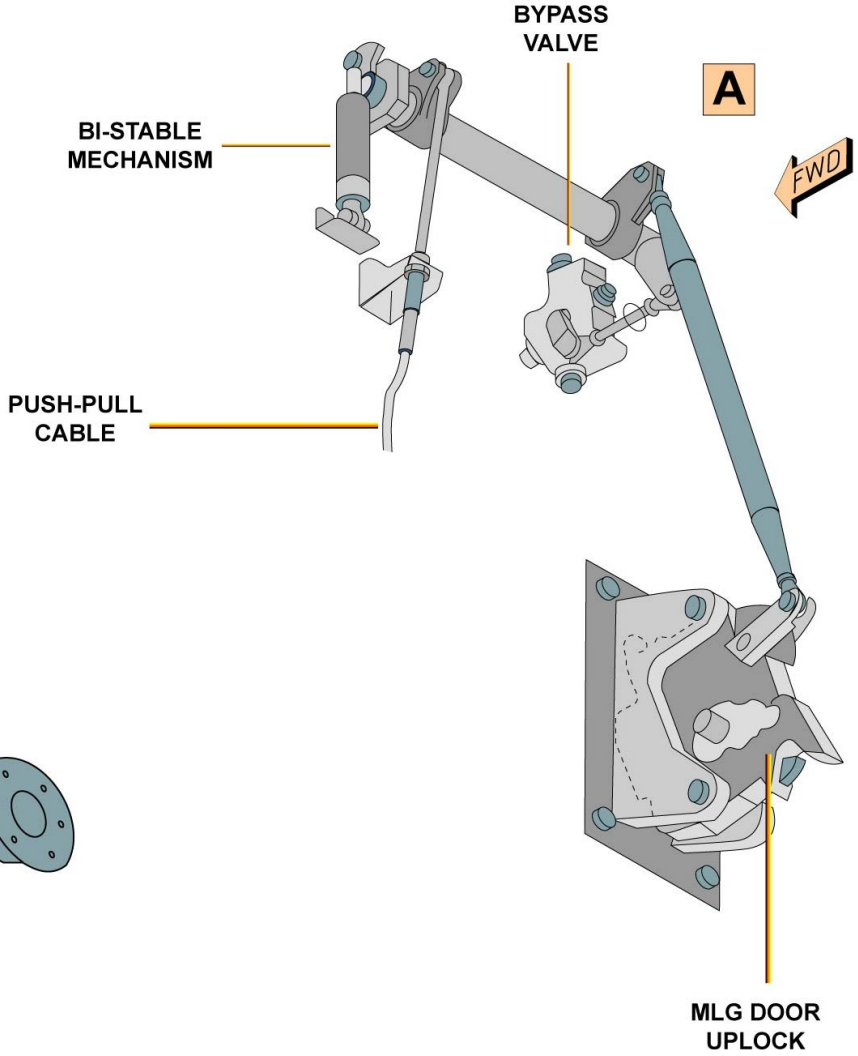

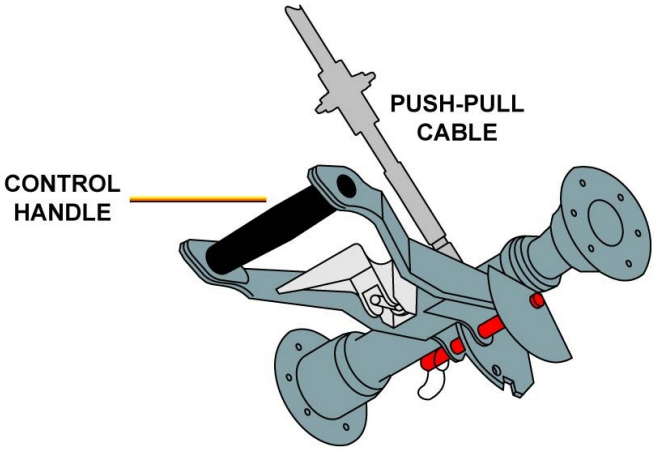

DESCRIPTION - MAIN LANDING GEAR

G7508471 - G3NT1T0 - FM32D400000003

DOOR GROUND OPENING D/O (3)

DESCRIPTION (continued)

NOSE LANDING GEAR

The NLG door ground-opening handle is installed on a housing on the aft bulkhead of the NLG bay. This location gives the operator a safe position and a clear view of the door range of travel. The control handle is connected, through a bell-crank and rod to the bypass valve. It is also connected through a spindle and push-pull cable to the NLG door uplock.

G7508471 - G3NT1T0 - FM32D400000003

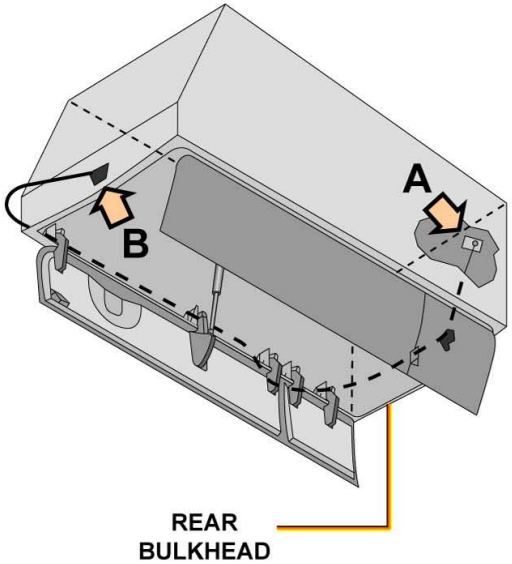

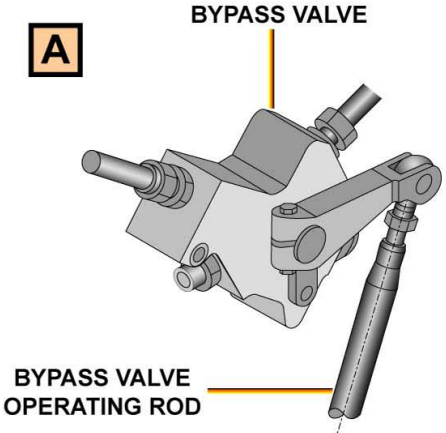

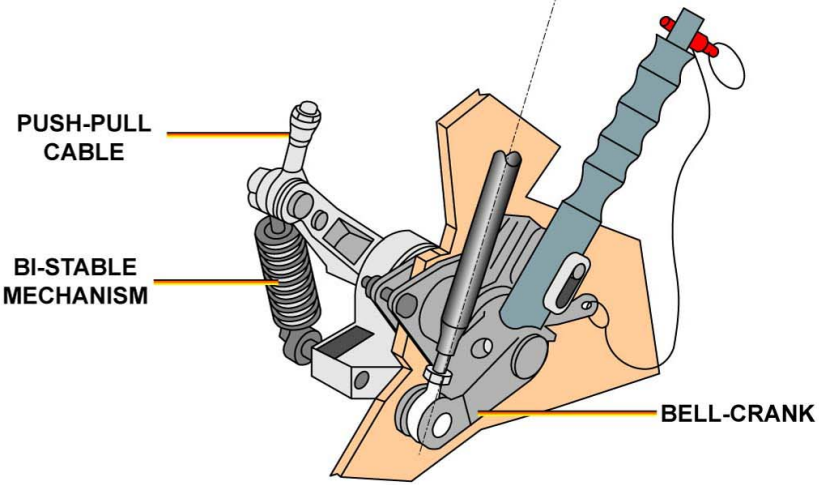

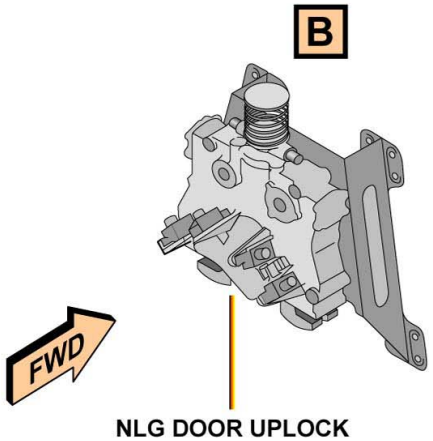

DESCRIPTION - NOSE LANDING GEAR

G7508471 - G3NT1T0 - FM32D400000003

DOOR GROUND OPENING D/O (3)

MAIN DOOR OPENING SCHEMATIC

As the principle is the same, the MLG door ground-opening mechanism has been chosen as example. When the door ground-opening mechanism is used, the control handle is connected through a push-pull cable and different components to a door uplock. During normal operation of the extension and retraction system, the hydraulic fluid goes through the bypass valve (between port B and C) to the door actuator.
The initial movement of the handle causes the bypass valve to isolate the door actuator from the door-close hydraulic line and interconnects the two chambers of the door actuator. Further movement of the handle operates the release mechanism in the door uplock, which lets the main door opening by gravity. The bypass valve includes a baulk device. This device prevents movement of the door ground-opening handle to the door close position unless the green hydraulic system is pressurized.

G7508471 - G3NT1T0 - FM32D400000003

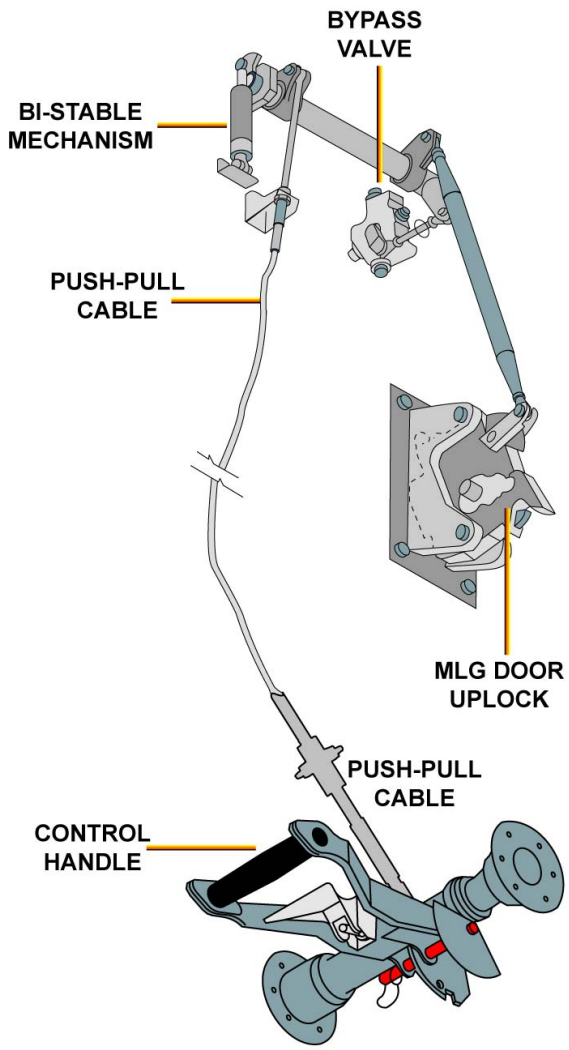

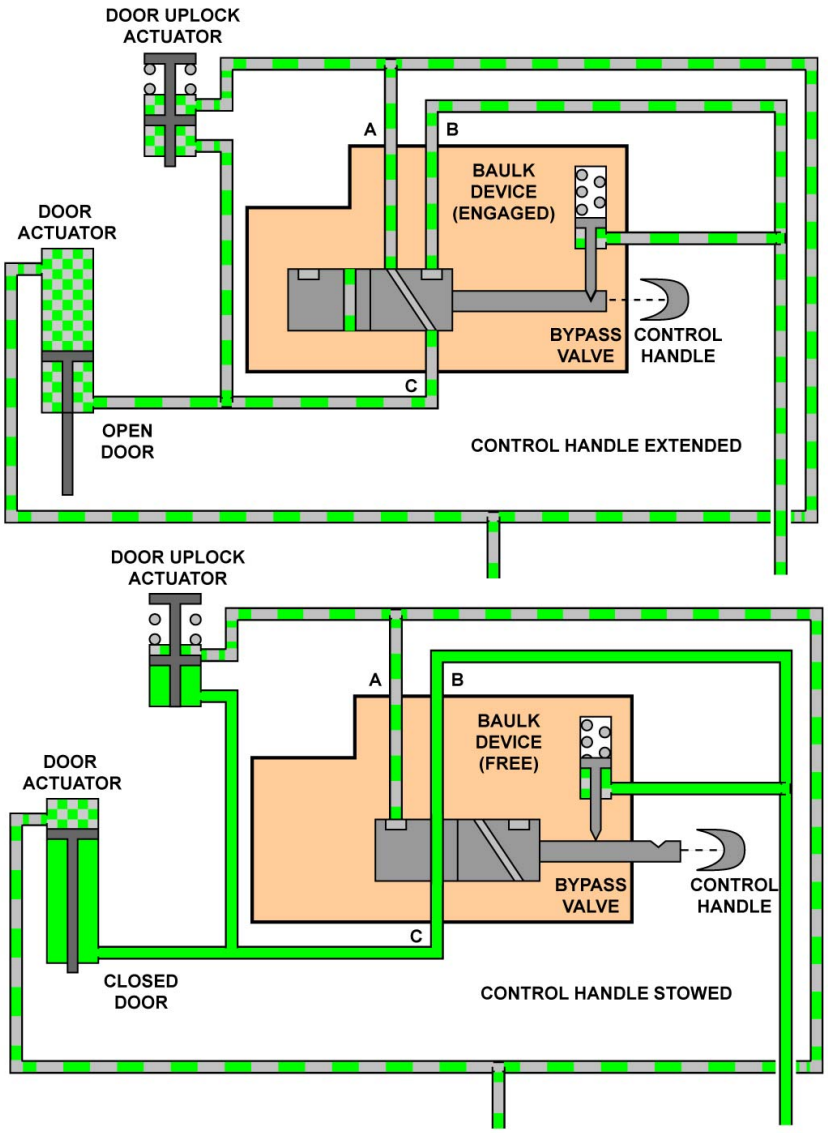

MAIN DOOR OPENING SCHEMATIC

G7508471 - G3NT1T0 - FM32D400000003

NORMAL BRAKING D/O (3)

SYSTEM ARCHITECTURE

This graphic presents the entire braking system architecture.

GENERAL

In the normal brake system, hydraulic power is supplied from the green system to actuate one set of pistons on each brake unit. The normal braking system is electrically signaled by the Brake and Steering Control Unit (BSCU) and fulfills:
- manual braking mode via the brake pedal deflection,
- automatic braking mode (pre-set selection),
- in-flight braking mode (automatic braking of the main wheels during landing gear retraction),
- anti-skid protection.

DESCRIPTION

The normal braking system is composed of different components that will be described.

BRAKE PEDAL ASSEMBLIES

The brake pedal assemblies, at each pilot position, are mechanically interconnected. They transmit the manual braking inputs through the brake pedal transmitter unit to the BSCU.

L/G PANEL

The auto brake rotary selector switch provides 3 auto brake modes intended for use during landing (LO, MED and HI).

BSCU

The dual channel BSCU controls and monitors the normal manual and automatic braking system with the anti-skid protection. It converts data for display and warnings, does various tests and supplies information to the Central Maintenance System (CMS).

NORM BRK SELECTOR VALVE

The Normal Brake Selector Valve controls the supply of the normal system. The valve is supplied by the green hydraulic system and electrically controlled by the BSCU. It is set to OPEN when energized and CLOSED when de-energized.

PRESSURE SWITCH

The pressure switch measures the green hydraulic pressure upstream from the normal brake selector valve and supplies data to the BSCU.

SERVO VALVES

The servo valves, one per braked wheel, release brake pressures as a function of the pressure control orders and anti-skid orders generated by the BSCU.

HYDRAULIC FUSES

The hydraulic fuses (1 per braked wheel) are located downstream from the normal servo valves to prevent excessive fluid loss in case of brake line rupture. They require manual reset after activation.

NORMAL BRAKE PRESSURE TRANDUCERS

The normal brake pressure transducers, one per braked wheel, are located downstream from the hydraulic fuses to allow the BSCU to control and monitor the pressure delivered by the servo valves.

RETURN ACCUMULATORS

In addition, two return accumulators (1 per L/G) are installed on the return line of each normal brake manifold. They prevent pressure surge in the return line during brake release.

BRAKE UNIT SUPPLY

In the normal brake system, the green hydraulic power supply actuates one set of pistons on each brake unit.

G7508471 - G3NT1T0 - FM32D500000003

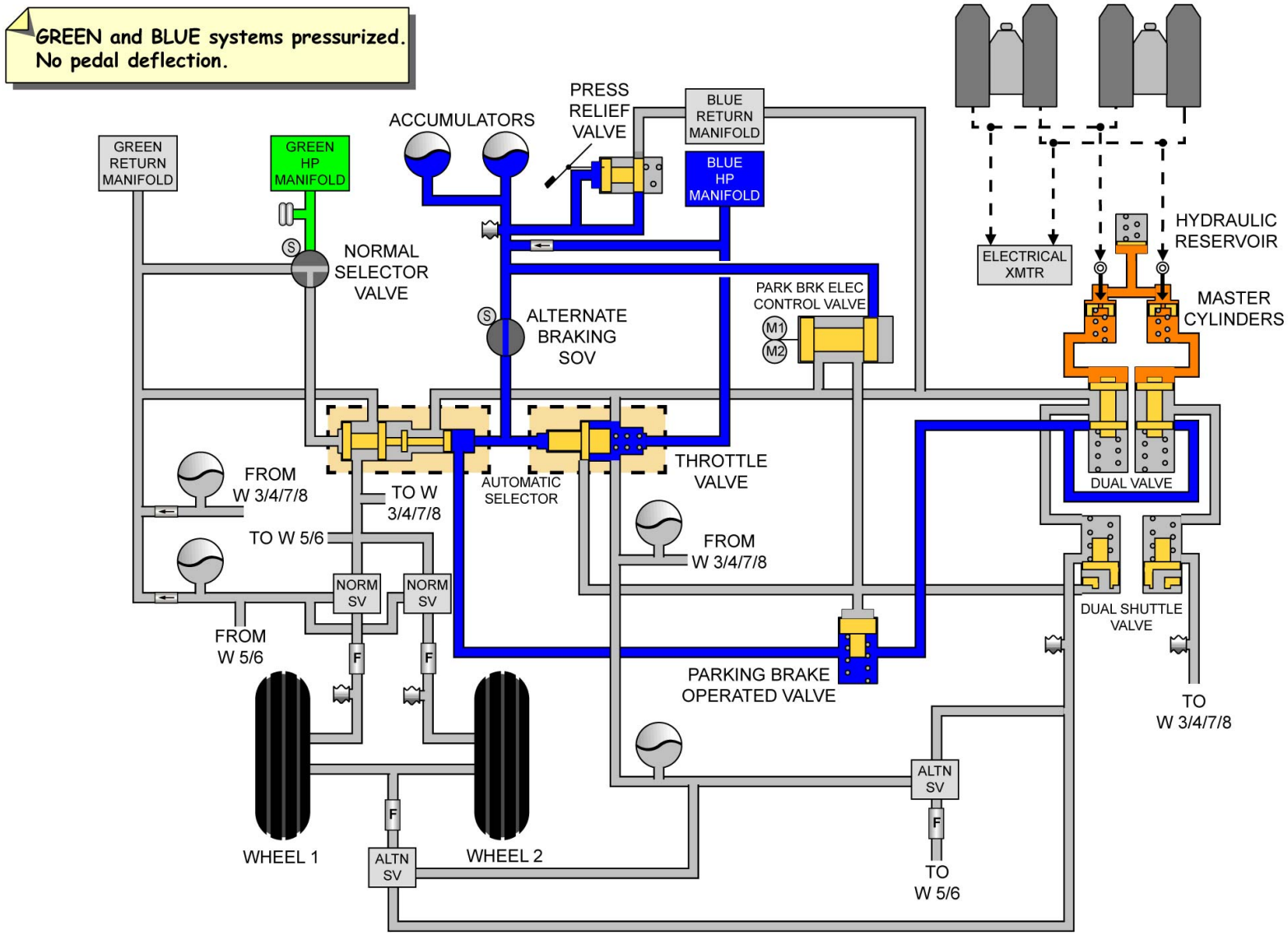

SYSTEM ARCHITECTURE ... DESCRIPTION

G7508471 - G3NT1T0 - FM32D500000003

NORMAL BRAKING D/O (3)

MANUAL BRAKING MODE

Brake pedal deflections are converted into a voltage signal by the brake pedal transmitter unit and transmitted to the BSCU. Following a positive pedal deflection of more than 2 degrees, the BSCU will energize the normal brake selector valve,
Which in turn port the fluid to the automatic selector valve. At this step, the green system prevails over the blue one.
The BSCU regulates the pressure through the servo valves. The current to the servo valve is proportional to the required pressure (ie.: 0A = 0press., 35mA = max. press.)
The BSCU will also provide ANTI-SKID signals to the servo valves. A pressure transducer downstream of the normal brake fuse confirms green pressure is available to the system. The normal brake pressure transducers transmit signals (corresponding to the applied pressure on the brakes) to the BSCU.

G7508471 - G3NT1T0 - FM32D500000003

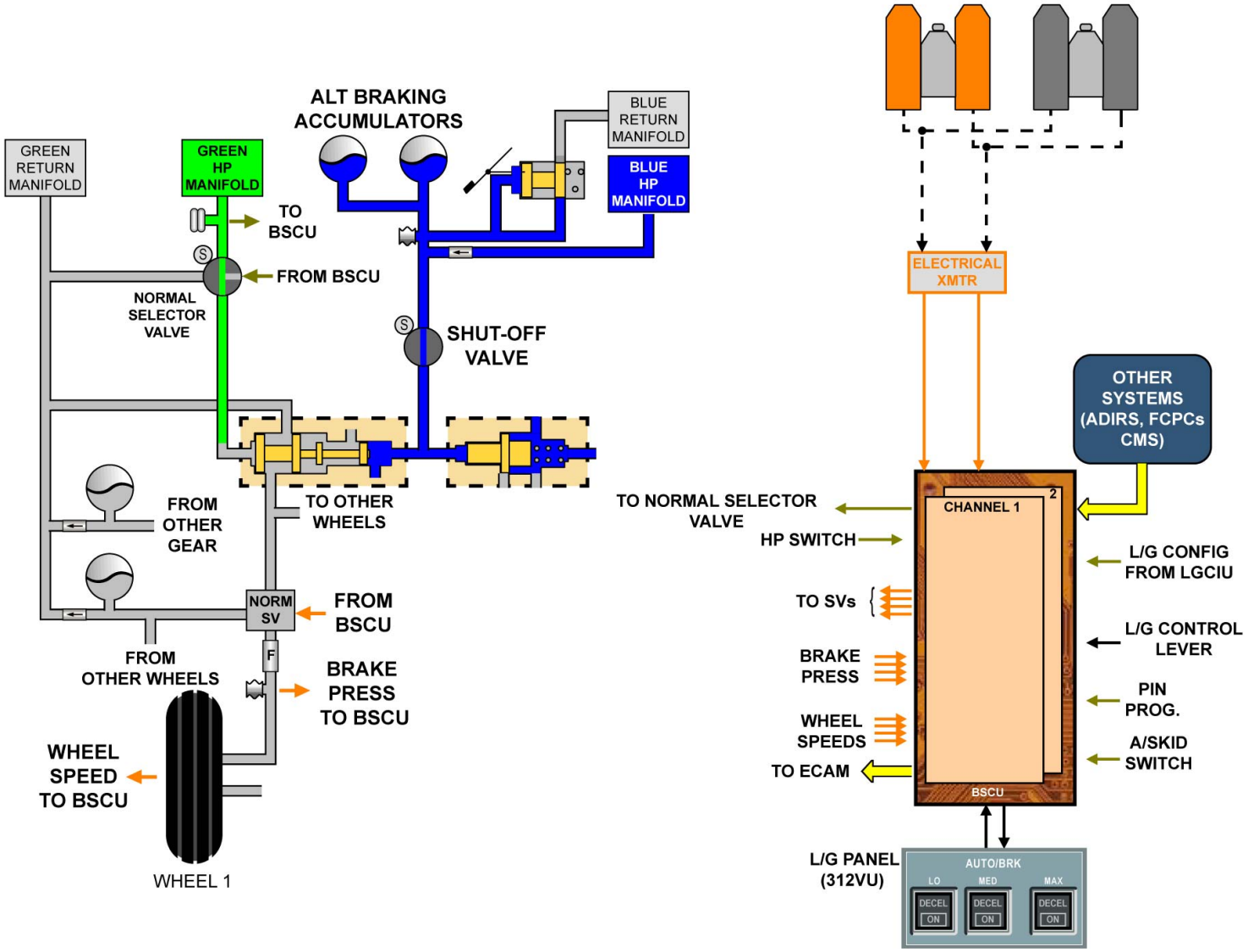

MANUAL BRAKING MODE

G7508471 - G3NT1T0 - FM32D500000003

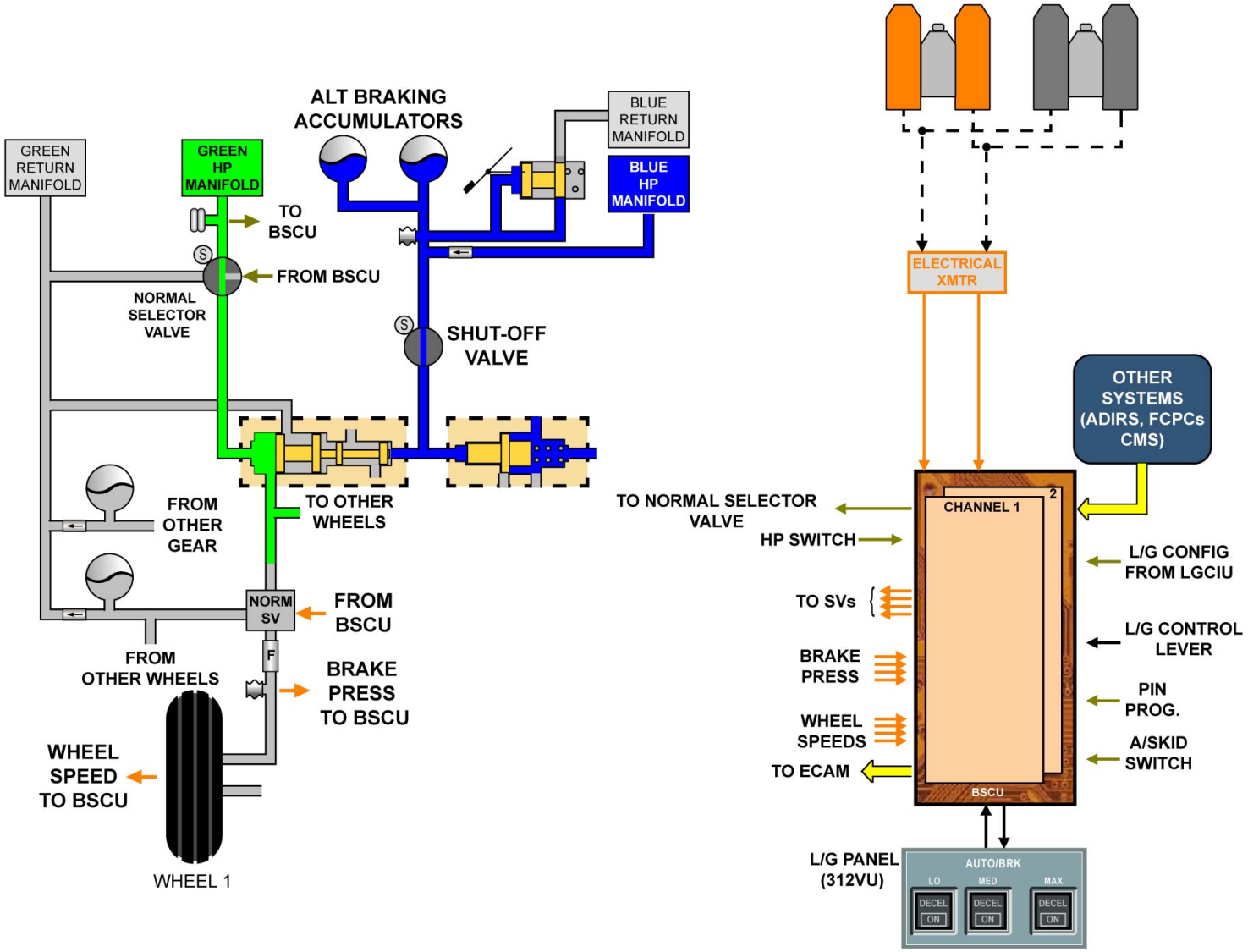

MANUAL BRAKING MODE

G7508471 - G3NT1T0 - FM32D500000003

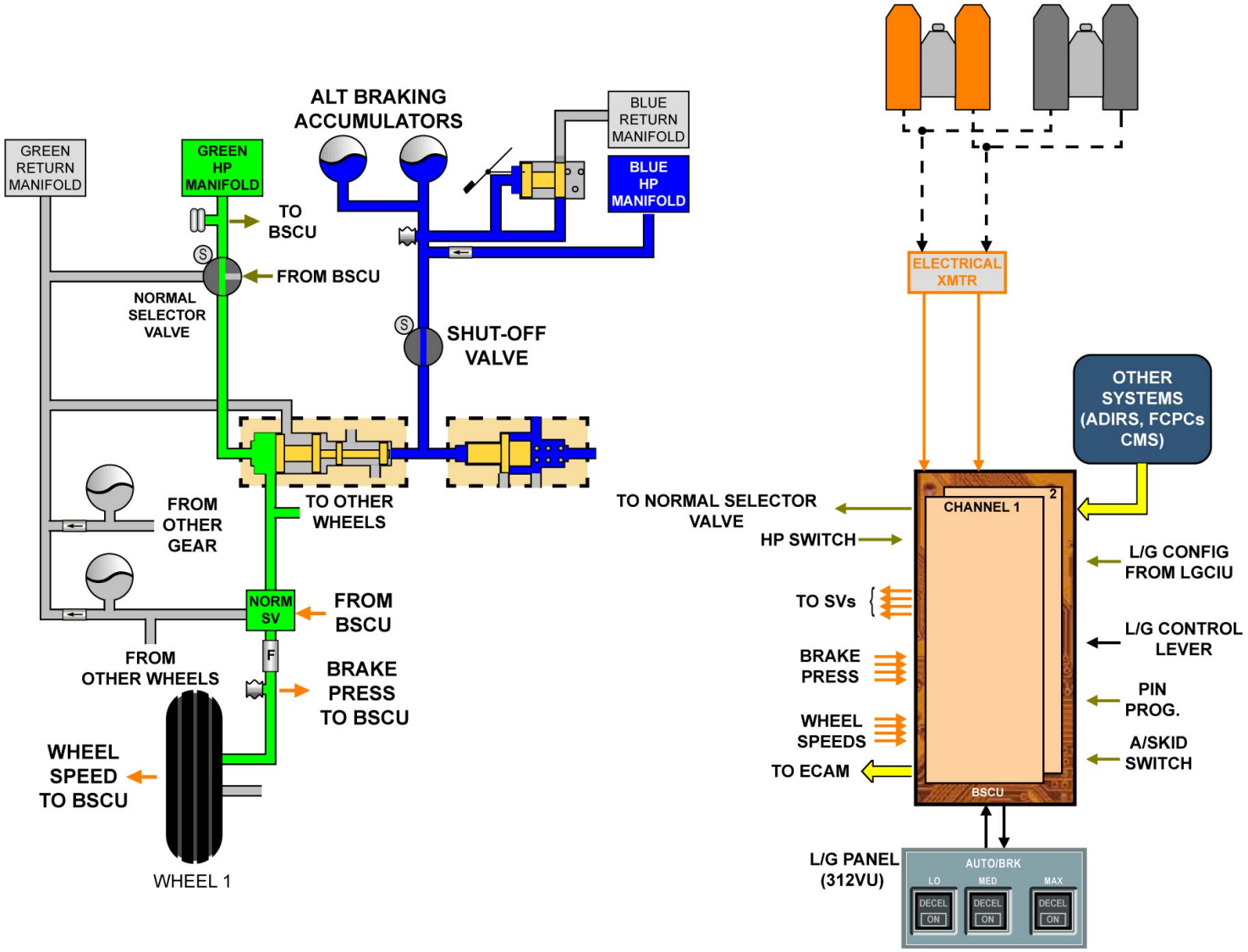

MANUAL BRAKING MODE

G7508471 - G3NT1T0 - FM32D500000003

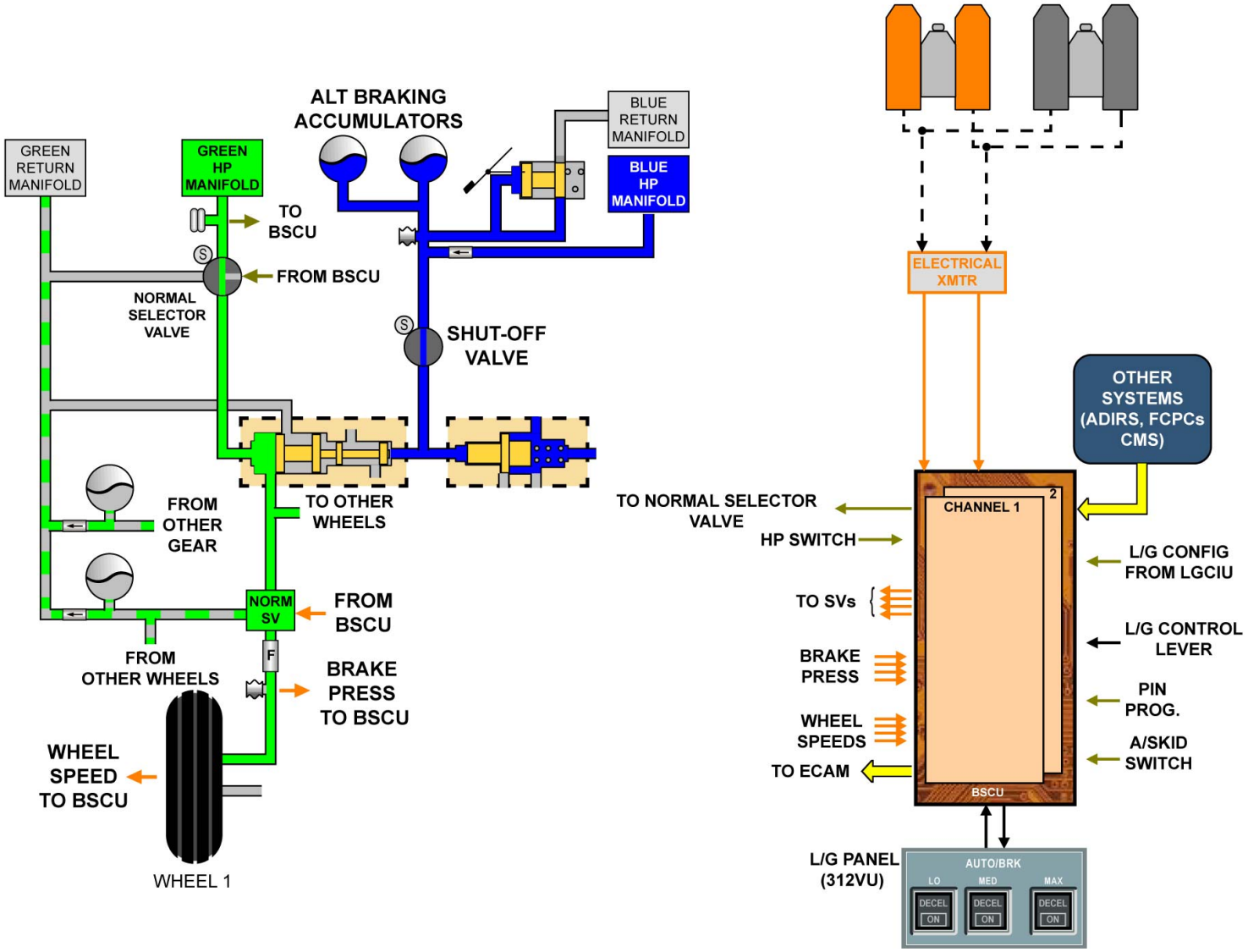

MANUAL BRAKING MODE

This Page Intentionally Left Blank

G7508471 - G3NT1T0 - FM32D500000003

NORMAL BRAKING D/O (3)

AUTO BRAKING MODE

When selected, the auto brake system automatically activates all the main wheel brakes via the normal braking system. The BSCU controls the servo valves to apply the level of braking required to decelerate the A/C. The pilot can select one of three preset rates, via the auto push buttons switch on the L/G instrument panel. During auto brake operation, the anti-skid function is available. The auto brake function is armed when the following conditions are met:
- green hydraulic pressure available,
- no BSCU failures, which prevent correct operation of auto brake,
- at least two Flight Control Primary Computers (FCPCs) available.
- at least one Air Data/Inertial Reference Unit (ADIRU) available.

Following the arming selection, the auto brake mode (Landing modes) is activated when both the left and right L/G wheels have compressed, and the BSCU receives two out of three ground spoiler deployed signals from the FCPCs. The BSCU opens the normal brake selector valve, and regulates the servo valves pressure anti-skid control. The commanded deceleration is achieved using an auto brake program, which computes an auto brake pressure order as a function of the required deceleration and the actual A/C deceleration received from the ADIRUs.
The auto brake engagement is lost if auto brake is manually disarmed by selection at the auto brake panel, or by pressing one brake pedal above 80% or both pedals above 60%. When auto brake is engaged the green DECEL illuminates at 80% of the required rate of deceleration. If a second auto brake mode is selected, either before or during the operation of the system, the second deceleration mode is selected.

G7508471 - G3NT1T0 - FM32D500000003

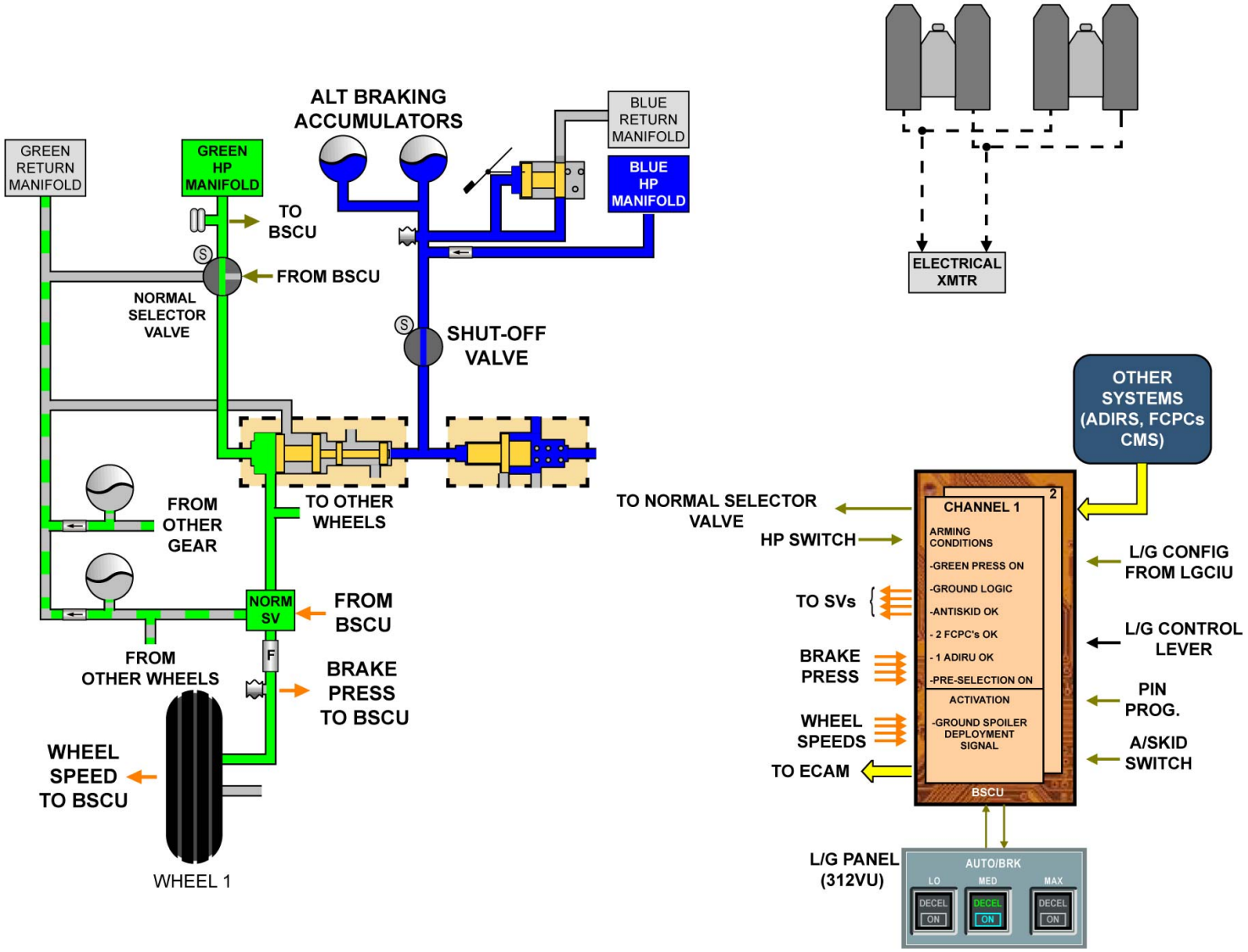

AUTO BRAKING MODE

NORMAL BRAKING D/O (3)

IN-FLIGHT BRAKING MODE

Braking occurs automatically during the retraction of the L/G. This stops the rotation of the MLG wheels before the L/G retracted goes into the related bays. When the L/G selector lever is put in the UP position, the normal brake selector valve is energized in order to connect the green hydraulic pressure to the brake manifolds. The servo valves are energized with a set control current to get the necessary pressure. After 3 sec. or when the NLG moves away from the downlocked position, the normal brake selector valve and servo valves are de-energized. This connects the system to return to release the pressure at the brakes.

G7508471 - G3NT1T0 - FM32D500000003

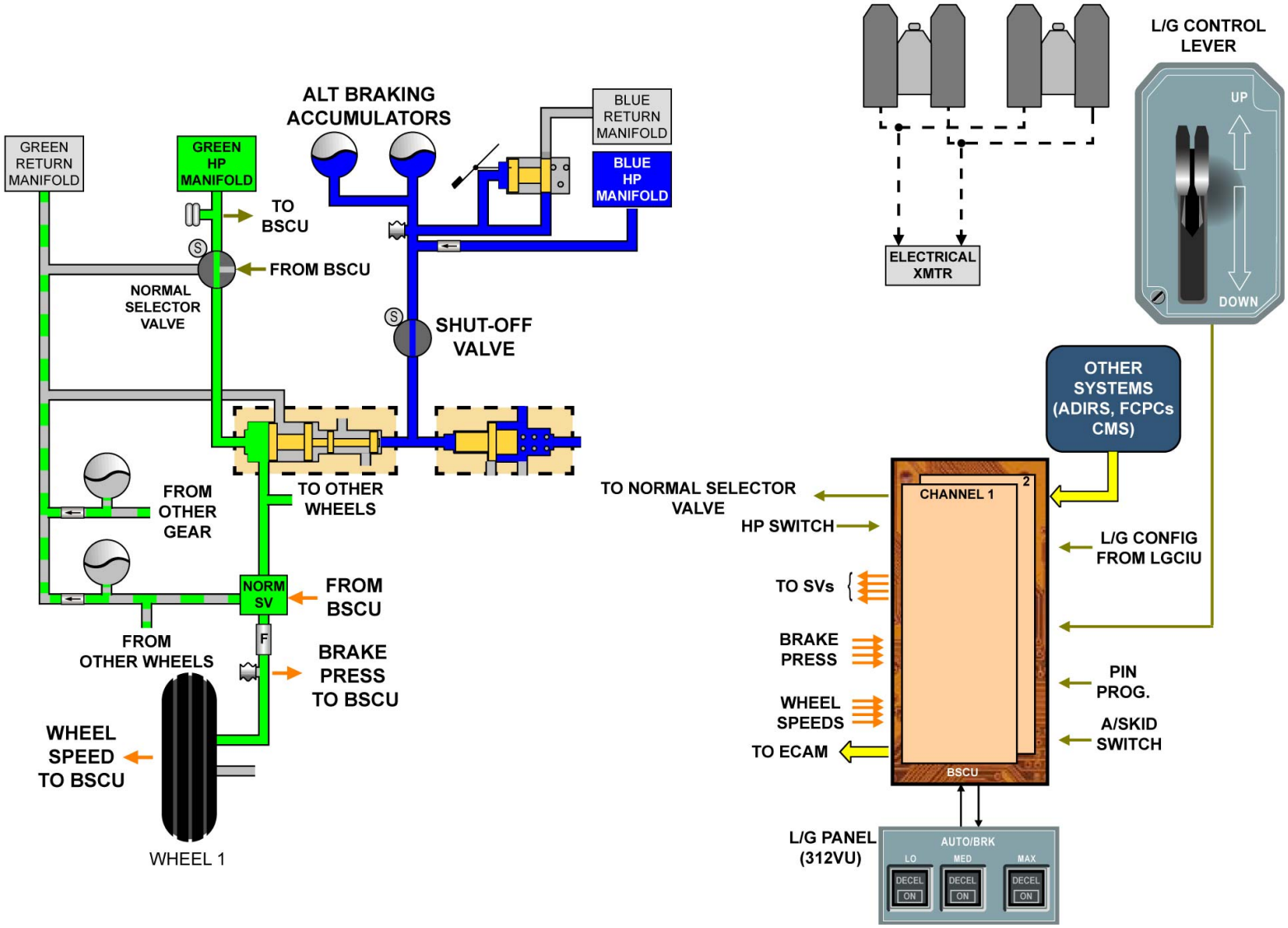

IN-FLIGHT BRAKING MODE

NORMAL BRAKING D/O (3)

ANTI-SKID PROTECTION

The anti-skid system implements a protection algorithm which inhibits braking before wheel spin-up and prevents loss of braking efficiency due to wheel skid during manual and auto braking modes. Anti-skid authority is reduced progressively at A/C speeds below 5 m/s. Anti-skid protection is implemented to achieve maximum braking efficiency under all runway conditions and tire/brake conditions, and it is available in normal (including auto brake) and alternate modes. The system uses wheel speed (measured by tachometers installed in the axles of each of the MLG wheels) and A/C reference speed together with other parameters to compute brake release orders (anti-skid current orders).
These are summed with the braking orders (commanded currents) from pedals or auto brake in order to maintain wheel slip at the optimum level for maximum retardation over varying runway surfaces. In the normal system, anti-skid protection is given on an individual wheel basis. The anti-skid current orders are combined with the related corrected currents to produce the normal brake servo-valve current orders. The pin programming used to specify brake type lets the anti-skid protection tuned to brakes from different manufacturers.
The braking efficiency for normal braking under all runway conditions will be at least 92% when anti-skid is operative. Wheel locking will not occur on icy runways, in stable conditions, providing that A/C ground speed is greater than 20 m/s. Anti-skid operation will not cause loss of braking at any speed or during any A/C maneuver. When the anti-skid system is releasing the brake pressure, 3 vertical green lines are displayed beside the related wheel number on the ECAM wheel page.

G7508471 - G3NT1T0 - FM32D500000003

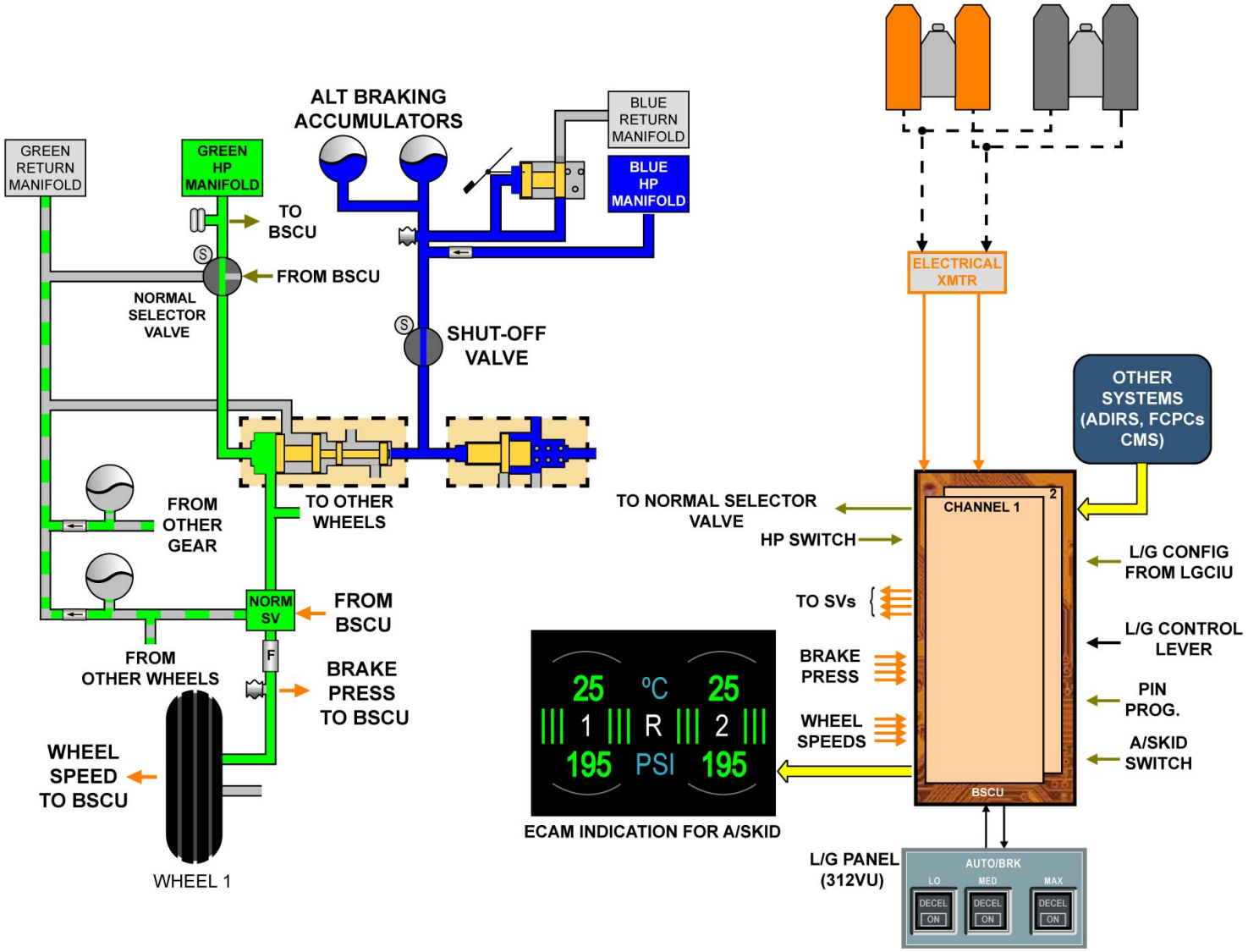

ANTI-SKID PROTECTION

ALTERNATE BRAKING D/O (3)

SYSTEM ARCHITECTURE

This graphic presents the entire braking system architecture.

GENERAL

System operation will switch from normal to alternate braking when normal braking is unavailable due to:
- green hydraulic system failure,
- normal braking component failure,
- braking/Steering Control Unit (BSCU) specific failure
- anti-skid switch is OFF

DESCRIPTION

The alternate braking system is composed of different components, which will be described.

BRAKE PEDAL ASSEMBLIES

The brake pedal assemblies give signals to the BSCU for alternate braking with anti-skid (A/SKID) function. A LP hydraulic system is connected to the brake pedals. It gives artificial feel in proportion to the pedal travel and supplies a control pressure to the dual valve.

BSCU

The BSCU controls and monitors the alternate braking system with the A/SKID protection. It converts data for display and warnings, performs various tests and supplies information to the Central Maintenance System (CMS).

PRESSURE TRANSDUCER

A pressure transducer measures the blue accumulator pressure for cockpit indication. It measures pressure in the left and right alternate brake supply lines. The third one, measures the blue accumulators pressure for alternate braking.

TRIPLE INDICATOR

The triple pressure indicator provides the pressure indication of the alternate brake system plus accumulators pressure. An indicator band from 0 to 1000 psi is provided on the left and right brake pressure indicators for alternate braking without anti-skid.

BRAKE ACCUMULATOR

The accumulators are of the oleo-pneumatic bladder type. Parking brake accumulators are located forward of the main landing gear bay in the belly fairing. They are serviced from the blue hydraulic ground service panel, each having its own gage and inflating valve. They are able to provide seven applications of the brakes with no system pressure available. Two pressure gages are provided on the blue ground service panel for the correct servicing of the accumulators.

DUAL VALVE

The dual valve is a hydro-mechanical valve that controls the quantity of the hydraulic system pressure that goes to the brakes. It operates in proportion to the pressure that comes from the brake pedals.

DUAL SHUTTLE VALVE

The dual shuttle valve is located downstream from the dual valve. It supplies the brakes with pressure from the alternate circuit.

ALTERNATE BRAKE SERVOVALVE MANIFOLD ASSEMBLY

The alternate brake servovalve manifold assembly is installed downstream of the dual shuttle valve. It permits installation of hydraulic components in a limited space. It contains two servovalves, a return accumulator, one pressure relief valve, two fuses (safety valves).

G7508471 - G3NT1T0 - FM32D600000003

SERVO VALVE

The servo valves are electrically controlled. They are permanently energized with a minimum of current to get the pressure to the brake quickly. Current increases to a maximum value to release the pressure in the brake with A/SKID function. The alternate servo valves are identical to the normal servo valves. The electrical control is different:
- only one coil is connected to the electrical connector,
- the coil is only energized to release the pressure in the brakes.

PRESSURE RELIEF VALVE

The pressure relief valve lets the pressure in the return line go to the supply line when necessary conditions occur.

SAFETY VALVE

Safety valves are located downstream of the servo valves. They are normally sprung loaded open valves with up and downstream chamber s controlling valve position. With a leak downstream, the downstream chamber will lose pressure and the valve forced closed on its seat.

SHUT-OFF VALVE

To ensure that alternate braking remains effective following green system failure during a long flight, the shut-off valve, installed in the alternate braking system, prevents depressurization of the parking brake accumulators. The valve is energized to close if the blue system pressure falls. This stops the internal leakage through the dual valve, thus maintaining accumulator pressure. This valve de-energizes to open at landing gear selection.

HYDRAULIC FUSES

The hydraulic fuses, one per braked wheel pair, are located downstream from the shuttle valves to prevent excessive fluid loss in case of brake line rupture or brake assembly leakage.

ALTERNATE BRAKE PRESSURE TRANSDUCERS

The alternate brake pressure transducers, one per braked wheel pair, are located upstream from the alternate brake servovalve manifold assembly to allow the BSCU to control or monitor the pressure in the alternate brake supply line.

RETURN ACCUMULATORS

The return accumulators are bladder type accumulators. They are identical to the normal brake accumulators with a nitrogen charging point. Their function is to make sure the brakes release smoothly. Each one is fitted with a pressure gage for correct quantity of charging. Those return accumulators, one per L/G, are installed on the return line on each alternate brake manifold. They prevent pressure surge in the return line during brake release and reduce brake release time.

BRAKE UNIT SUPPLY

The alternate system is powered by the blue hydraulic system to actuate the second independent set of pistons on each brake unit.

RESERVOIR

The alternate brake reservoir is located in the avionics compartment. The reservoir provides sufficient quantity of pressurized hydraulic fluid to keep the master cylinders full. A transparent indicator with a red and green line indicates the low and correct fluid level in the reservoir.
They provide a related feel force during brake pedal operation. They change the mechanical input into an hydraulic pressure to operate the dual valve. Pedal pressure moves the spring and supplies pressure to the dual valve. With no pressure on the pedals, the spring and hydraulic pressure return the sliding assembly to its original position.

G7508471 - G3NT1T0 - FM32D600000003

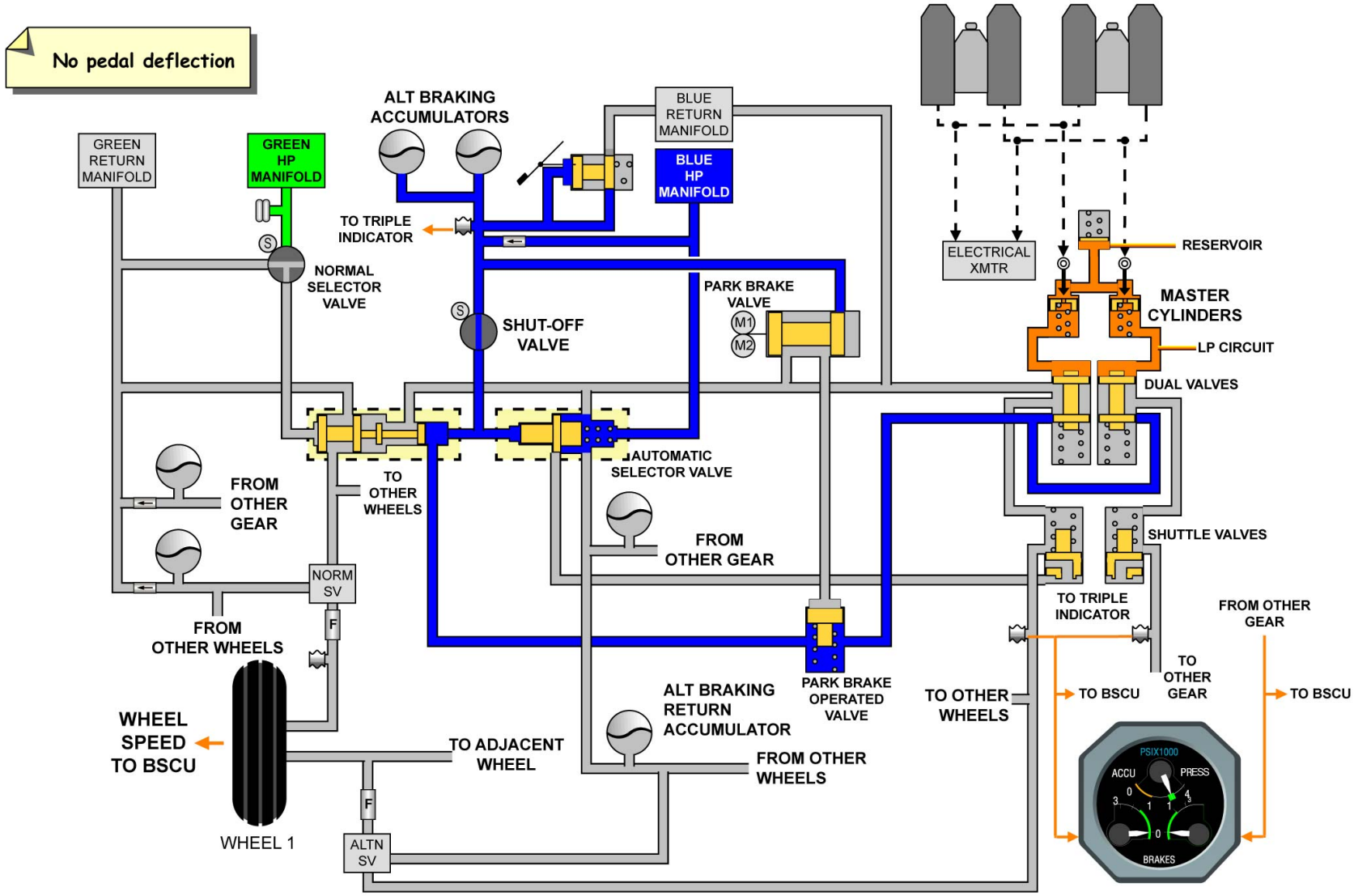

SYSTEM ARCHITECTURE ... DESCRIPTION

G7508471 - G3NT1T0 - FM32D600000003

This Page Intentionally Left Blank

G7508471 - G3NT1T0 - FM32D600000003

ALTERNATE BRAKING D/O (3)

ALTERNATE BRAKE WITH ANTI-SKID

When the brake pedals are operated, pressure from the LP system is sent to the dual valve in proportion to the brake pedal travel. When the dual valves are displaced, the brake fluid pressure is then sent to the brake units via the shuttle valves and the alternate servovalves.

NOTE: There is no fluid mixture between the LP circuit and the blue alternate braking system fluids.

The pressure delivered to the left hand and right hand brakes as well as the blue accumulator pressure are indicated on the triple indicator.
If the wheel reaches a skid condition, the BSCU A/SKID protection will reduce the current to the appropriate servovalves, so the pressure to both wheels on the same axle is released which in turn port surplus fluid to return circuit.
The vertical lines are displayed at the corresponding pair of wheels on the ECAM wheel page

G7508471 - G3NT1T0 - FM32D600000003

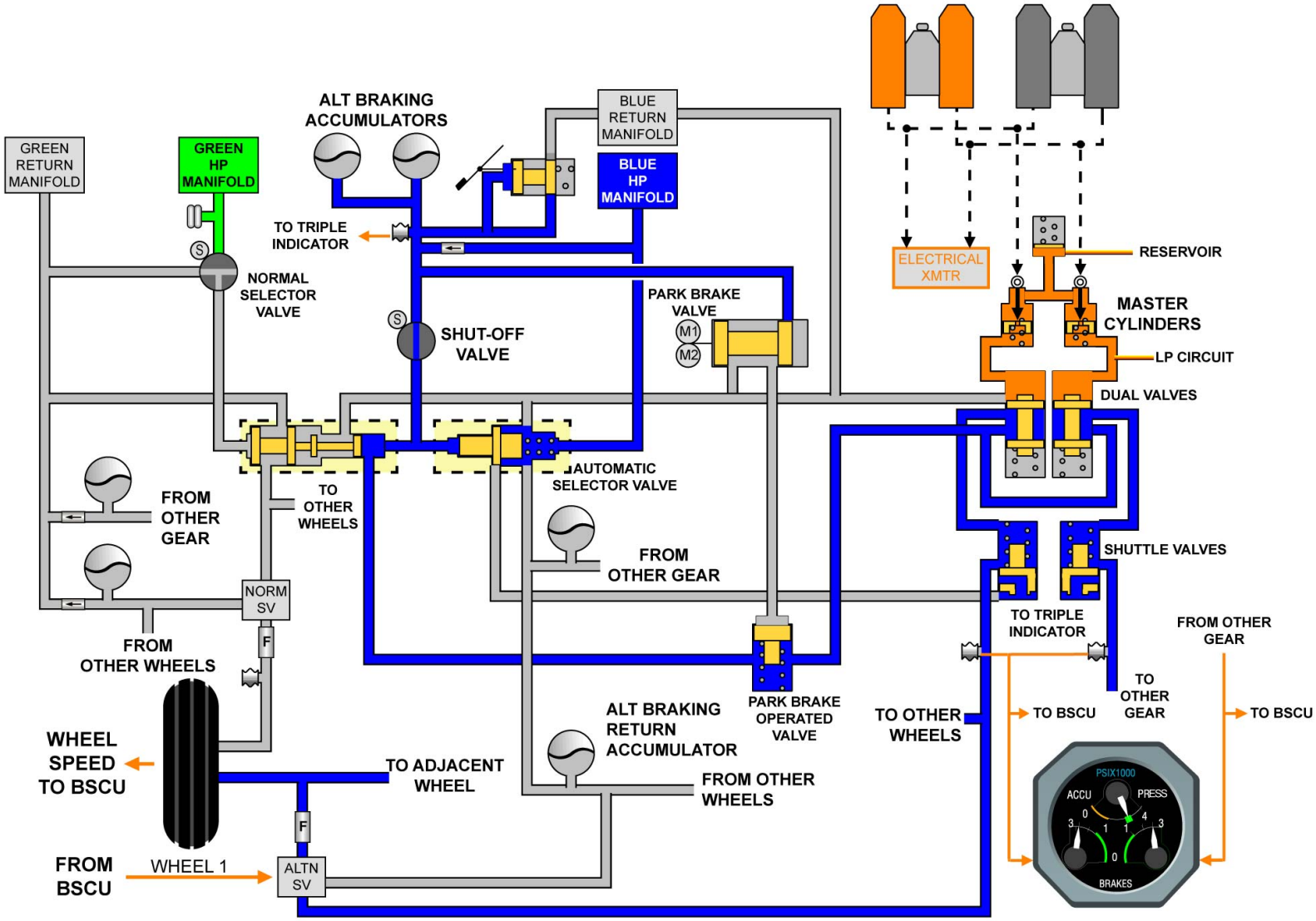

ALTERNATE BRAKE WITH ANTI-SKID

G7508471 - G3NT1T0 - FM32D600000003

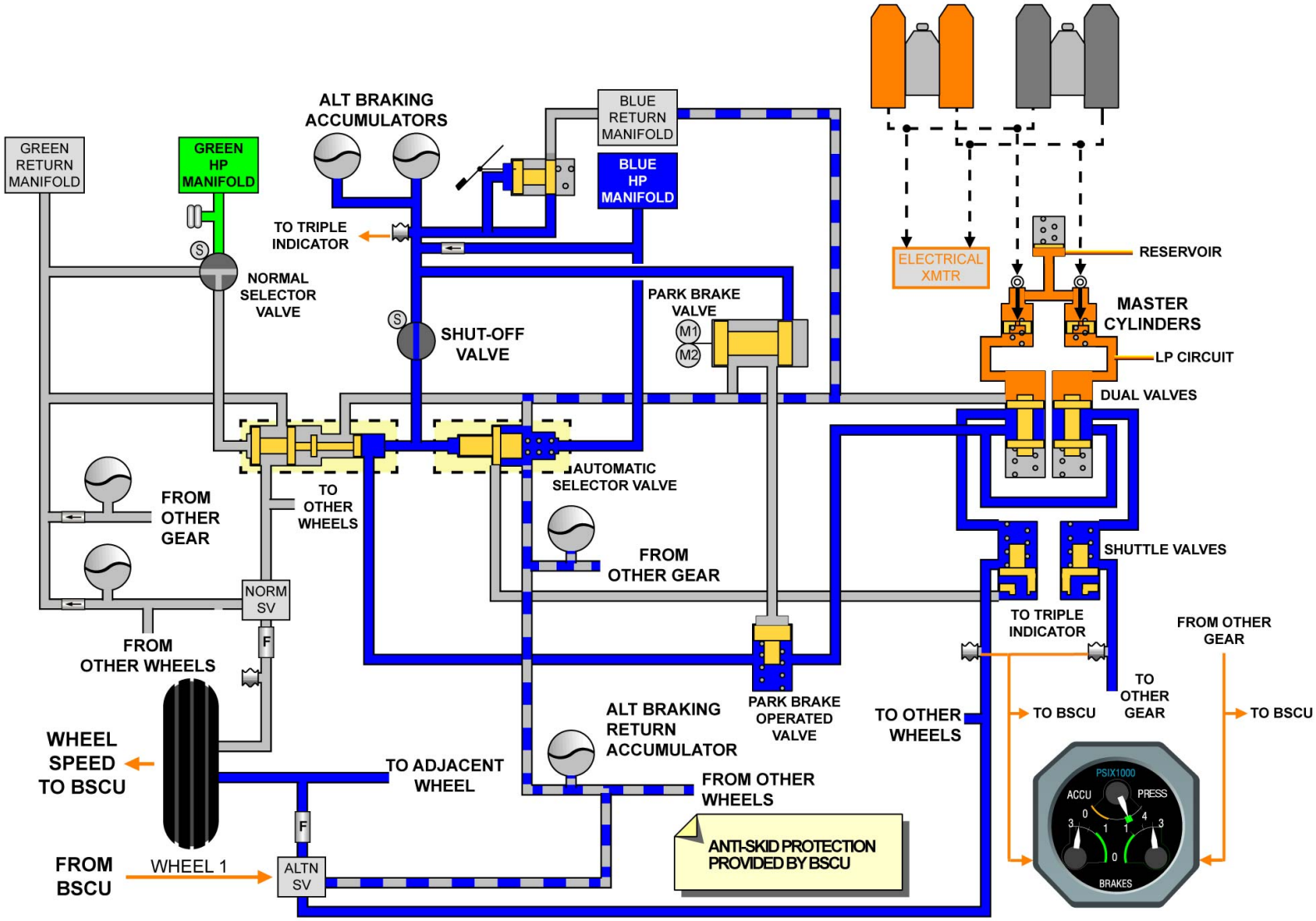

ALTERNATE BRAKE WITH ANTI-SKID

G7508471 - G3NT1T0 - FM32D600000003

This Page Intentionally Left Blank

G7508471 - G3NT1T0 - FM32D600000003

ALTERNATE BRAKING D/O (3)

ALTERNATE BRAKE WITHOUT ANTI-SKID

The alternate brake without A/SKID is available when:
-the A/SKID switch is set to OFF,
-the BSCU is not available.
When the brake pedals are operated, pressure from the LP system is sent to the dual valve in proportion to the brake pedal travel. If the blue hydraulic supply is not available, accumulators give sufficient pressure for at least seven full applications of the brakes. The alternate servo valve remains fully open as it receives no anti-skid signals from the BSCU. The brake pressure has to be limited by the pilot to avoid wheel locking. The pressure delivered to the left hand and right hand brakes as well as the blue accumulator pressure are indicated on the blue pressure triple indicator.

G7508471 - G3NT1T0 - FM32D600000003

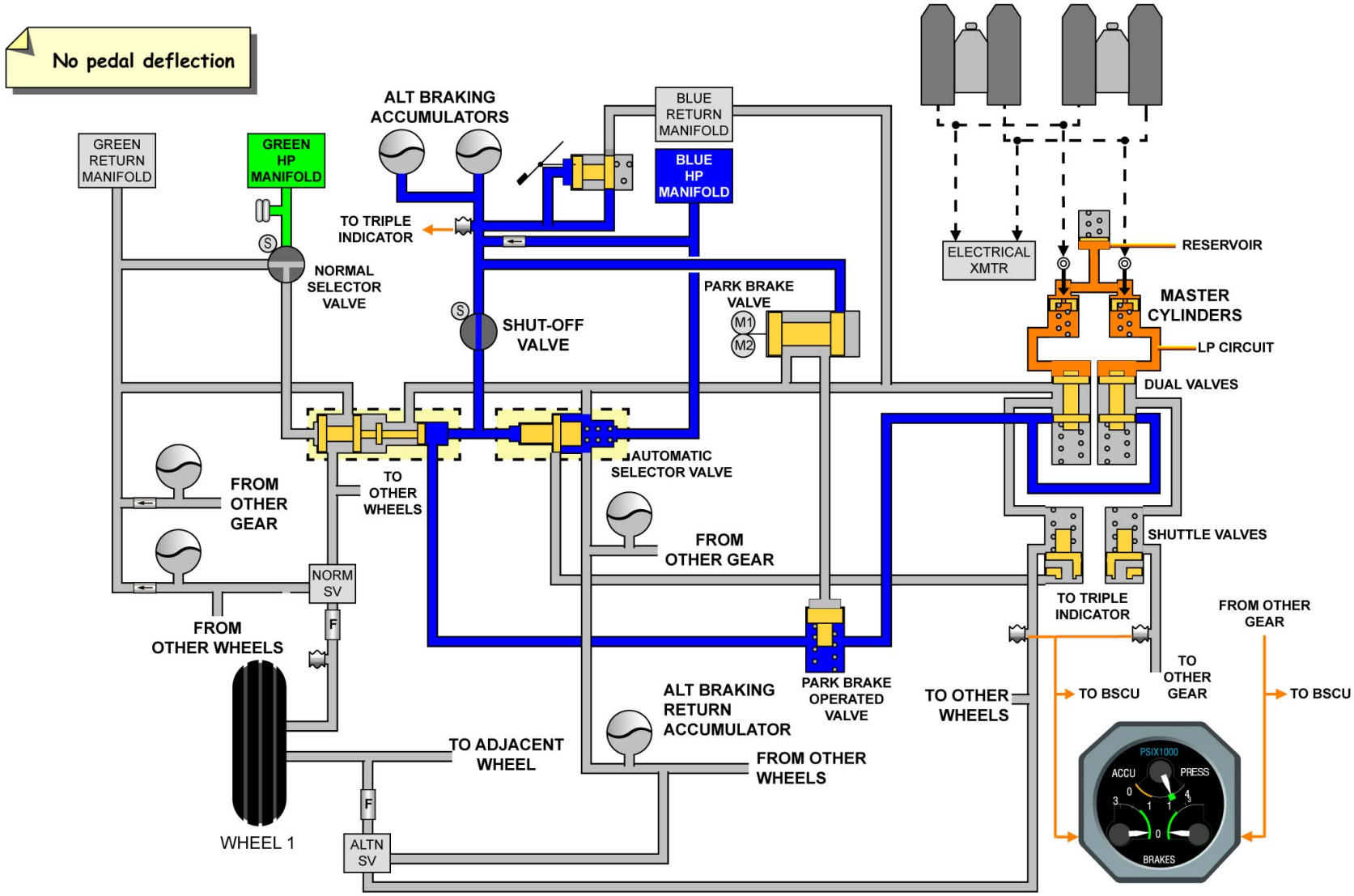

ALTERNATE BRAKE WITHOUT ANTI-SKID

G7508471 - G3NT1T0 - FM32D600000003

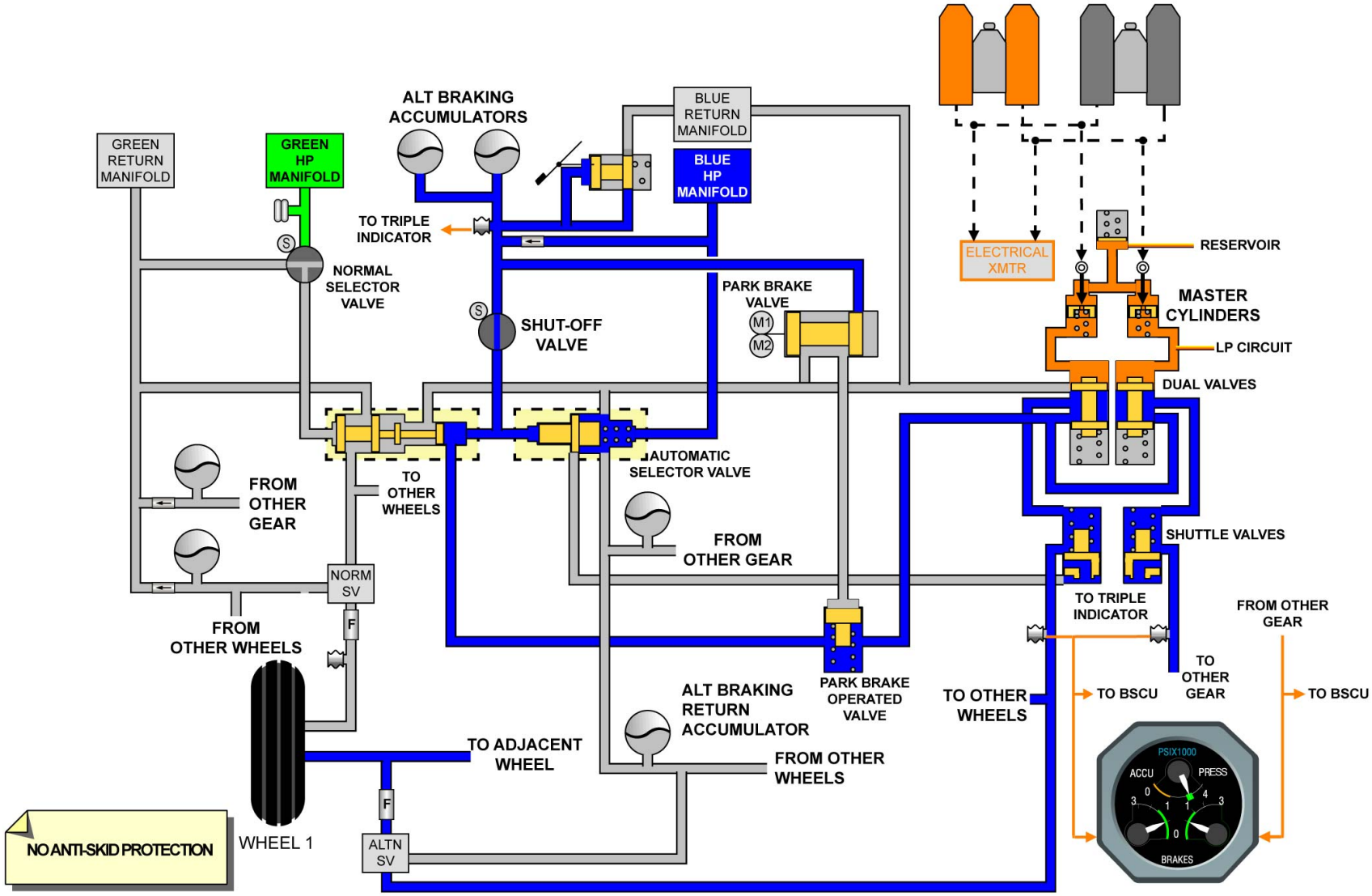

ALTERNATE BRAKE WITHOUT ANTI-SKID

G7508471 - G3NT1T0 - FM32D600000003

This Page Intentionally Left Blank

G7508471 - G3NT1T0 - FM32D600000003

ALTERNATE BRAKING D/O (3)

ALTERNATE BRAKE PRESSURE INDICATION

The triple gage indicator provides left and right brake pressure indications by monitoring the applied pressure to the brakes mounted on the FWD axle on each MLG. The upper part of the gage displays the pressure available from the accumulators. The transducers, for applied pressure indication, are the same units, fitted to the alternate brake manifold, that supply pressure information to the BSCU.

G7508471 - G3NT1T0 - FM32D600000003

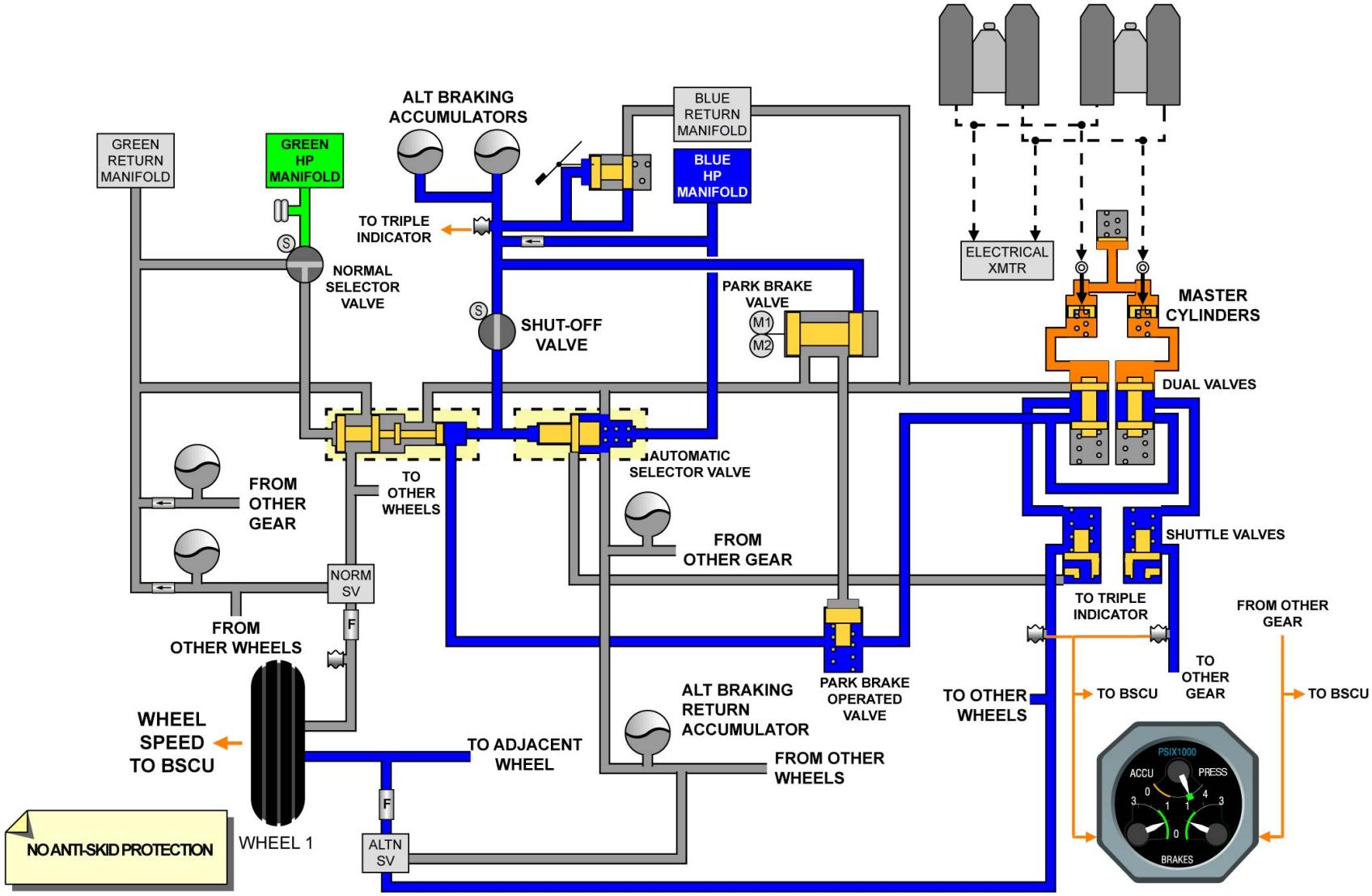

ALTERNATE BRAKE PRESSURE INDICATION

G7508471 - G3NT1T0 - FM32D600000003

PARK/ULTIMATE BRAKING D/O (3)

GENERAL

The park braking system is supplied by the blue system pressure or the brake accumulators. The park braking system is designed to prevent the A/C from rolling on a paved, level runway with take-off power on the critical engine, and all other engines at ground idle. When active, it will cause the Brake/Steering Control Unit (BSCU) to inhibit all other braking modes.
When the parking brake selector switch, in the cockpit, is set to ON, the motors in the parking brake control valves are energized. Pressure is supplied to the automatic selector valve which closes the return lines from the alternate brake servovalves. Pressure is supplied to the parking brake operated valve which isolates the dual valve from the parking brake system. The dual shuttle valve connects the pressurized fluid to the brakes. Accumulator replenishment is automatic by means of the blue electric pump. The pressure in the brakes is required to be maintained for a duration of 12 hours at 175 bars (2540 psi). When the parking brake selector switch is set to OFF, the motors are energized to release the applied pressure and to open the hydraulic line to the blue return manifold.

DESCRIPTION

The park braking system is composed of different components.

PRESSURE RELIEF VALVE AND CHECK VALVE

The pressure relief valve and check valve are integral part of the brake accumulator manifold. A check valve prevents discharge of the accumulator when the blue hydraulic system is unavailable. The pressure relief valve enables the accumulator to be discharged automatically following an overpressure at 3400 psi, or manually for servicing.

ACCUMULATOR PRESSURE TRANSDUCER

The accumulator pressure transducer measures the blue hydraulic pressure at the brake accumulator manifold and sends signals to the triple gage indicator and BSCU.

BRAKE ACCUMULATORS

The park brake accumulators are of the oleo-pneumatic bladder type, and maintain a specific volume of pressurized hydraulic fluid in case of blue system failure. They are serviced at the blue hydraulic ground service panel, which is equipped with two pressure gages. The system design will allow the park breaking to be supplied by the accumulators for up to 12 hours after a blue system failure or shut off.

PARK BRAKING SELECTOR SWITCH

The PRK BRK selector switch is a four-pole, two-position (OFF/ON) switch that sends the power supplies to the park brake control valve.

PARK BRAKE OPERATED VALVE

Parking brake operated valve is located in the main landing gear bay. It is a mechanical valve containing one spring loaded shuttle valve. When the parking brake is selected "ON", the supply pressure from the parking brake control valve moves the shuttle valve on to its seat to isolate the supply from the automatic selector valve.

PARK BRAKE CONTROL VALVE

The park brake control valve is operated by two motors, which are supplied by the 28 VDC HOT BUS and by the 28 VDC SERVICE BUS. The limit switches in the valve motor will cancel the power supply when the selected position is reached. In the OFF position it connects the park braking supply from the manifolds to the blue system return. This is done by the parking brake operated valve and the automatic selector. When activated, the park brake control valve delivers a predetermined pressure (2500 psi) to the MLG brakes via

the 4 alternate servo valves. It also sends an electrical signal to the BSCU in order to inhibit other braking modes. This signal is disabled within the BSCU if blue system pressure, sent to the brake units and monitored by the pressure transducers, falls below 1450 psi.

PARK BRAKE MANIFOLD

Parking brake manifold is located in the main landing gear bay. The manifold receives the blue hydraulic system supply and the two brake accumulators pressure. These are separated by the check valve. The manifold contains the pressure transducer and the pressure relief valve. The pressure relief valve operates to return at 265 bars(3843 psi). A manual lever can be operated to open the pressure relief valve.

DUAL SHUTTLE VALVE

Dual shuttle valve is located in landing gear bay. It contains two spring loaded shuttle valves. When the parking brake is selected "ON", the dual shuttle valve closes the supply to the dual valve and opens the supply to the alternate servo valves.

HYDRAULIC FUSES (F)

The hydraulic fuses (1 per braked wheel pair) are located downstream of the servo valves. They prevent excessive fluid loss in case of brake line cut or brake assembly leakage.

ALTERNATE BRAKE PRESSURE TRANSDUCERS (ALTN BRK PRESS XDCR)

The alternate brake pressure transducers on each MLG confirm parking pressure to the triple indicator.

G7508471 - G3NT1T0 - FM32D700000003

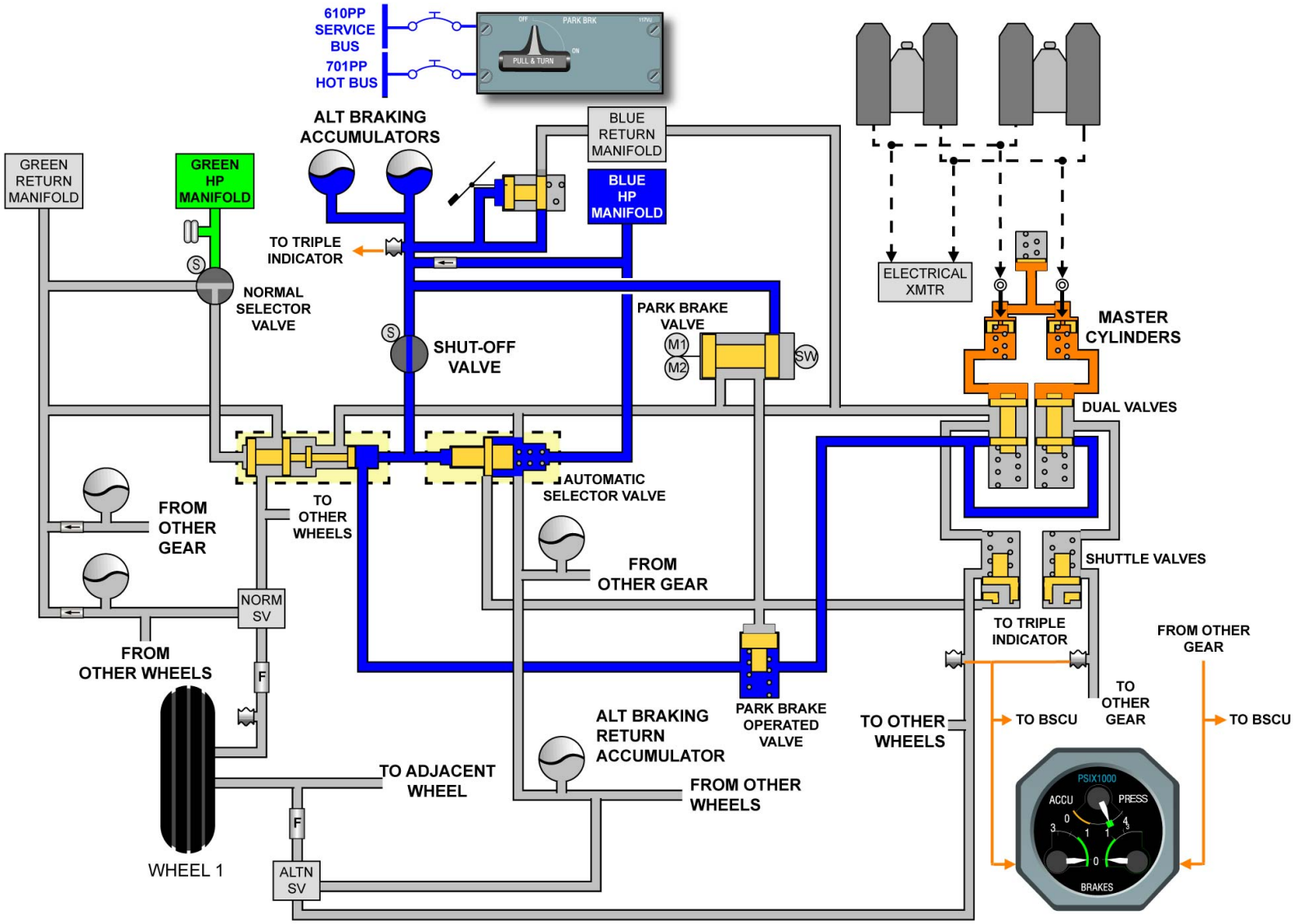

GENERAL & DESCRIPTION

This Page Intentionally Left Blank

G7508471 - G3NT1T0 - FM32D7000000003

PARK/ULTIMATE BRAKING D/O (3)

OPERATION

When the PRK BRK selector switch is set to ON, the motors in the park brake control valve are supplied and the valve opens. When the valve is open, it connects the hydraulic pressure supply to the park braking system, isolate the alternate servo valves return circuit and an electrical signal is sent to the BSCU in order to isolate the other braking modes. The park brake control valve is also a pressure-reducing valve that reduces the supply pressure to 175 bars (2500 psi) and sends the hydraulic pressure to the alternate brake manifolds of each MLG. The hydraulic pressure operates the shuttle valves to pressurize the alternate brake pistons. The triple gage pressure indicator shows the pressure that is available from the brake accumulators.
If the monitored park braking pressure (done by the pressure transducers) to the brake units falls below 1450 psi, the BSCU inhibition is no longer active. Therefore the normal braking system can be used provided the green hydraulic system is pressurized and pedals are depressed.

G7508471 - G3NT1T0 - FM32D700000003

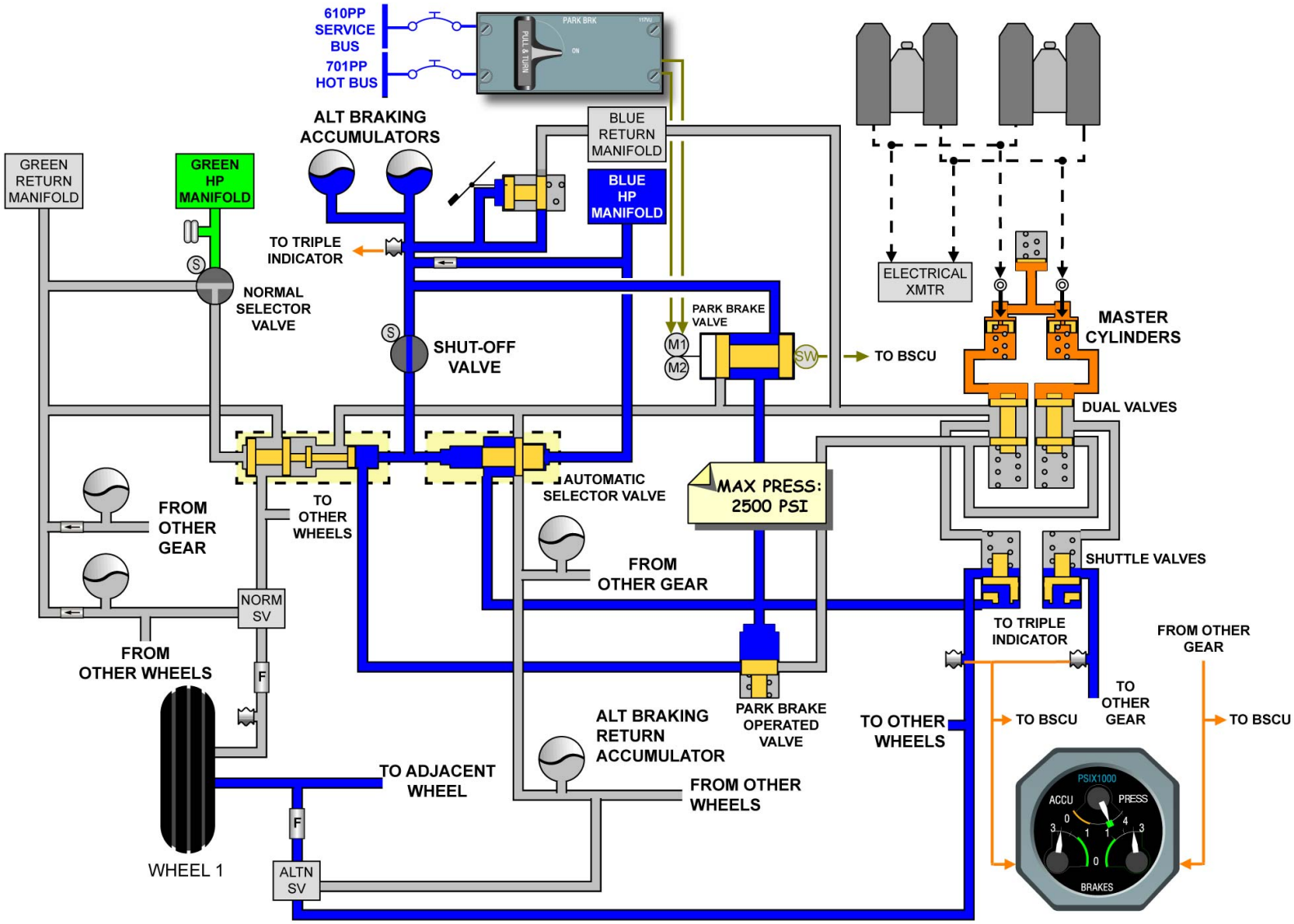
610PP SERVICE BUS
701PP HOT BUS
PARK BRK
PULL & TURN
ON
ALT BRAKING ACCUMULATORS
BLUE RETURN MANIFOLD
BLUE HP MANIFOLD
GREEN RETURN MANIFOLD
GREEN HP MANIFOLD
TO TRIPLE INDICATOR
NORMAL SELECTOR VALVE
SHUT-OFF VALVE
PARK BRAKE VALVE
M1
M2
SW
TO BSCU
ELECTRICAL XMTR
MASTER CYLINDERS
DUAL VALVES
AUTOMATIC SELECTOR VALVE
MAX PRESS: 2500 PSI
FROM OTHER GEAR
TO OTHER WHEELS
FROM OTHER GEAR
SHUTTLE VALVES
NORM SV
FROM OTHER WHEELS
F
TO TRIPLE INDICATOR
FROM OTHER GEAR
TO OTHER GEAR
PARK BRAKE OPERATED VALVE
ALT BRAKING RETURN ACCUMULATOR
TO OTHER WHEELS
TO BSCU
TO BSCU
TO ADJACENT WHEEL
FROM OTHER WHEELS
PSIX1000
ACCU
PRESS
BRAKES
WHEEL 1
ALTN SV

OPERATION

BRAKE TEMPERATURE AND COOLING SYSTEM D/O (3)

BRAKE SYSTEM TEMPERATURE

The brake temperature monitoring system is installed on each wheel of the Main Landing Gear. An accessible chromel alumel thermocouple sensor is installed in each brake to monitor the brake heat pack temperature.
The 8 chromel alumel temperature sensors independently deliver a voltage, proportional to the temperature difference between the cold junction and the hot junction, to the Brake Temperature Monitoring Units (BTMUs). Each BTMU, for each pair of brakes, compensates and amplifies the temperature sensor voltage signal of the related brakes. Each BTMU outputs a voltage to the Braking and Steering Control Unit (BSCU). The BSCU changes the BTMU inputs from analog data to digital data.
The BSCU transmits data to the ECAM, monitors the system components and transmits the data to the Central Maintenance Computer (CMC).

G7508471 - G3NT1T0 - FM32DA000000001

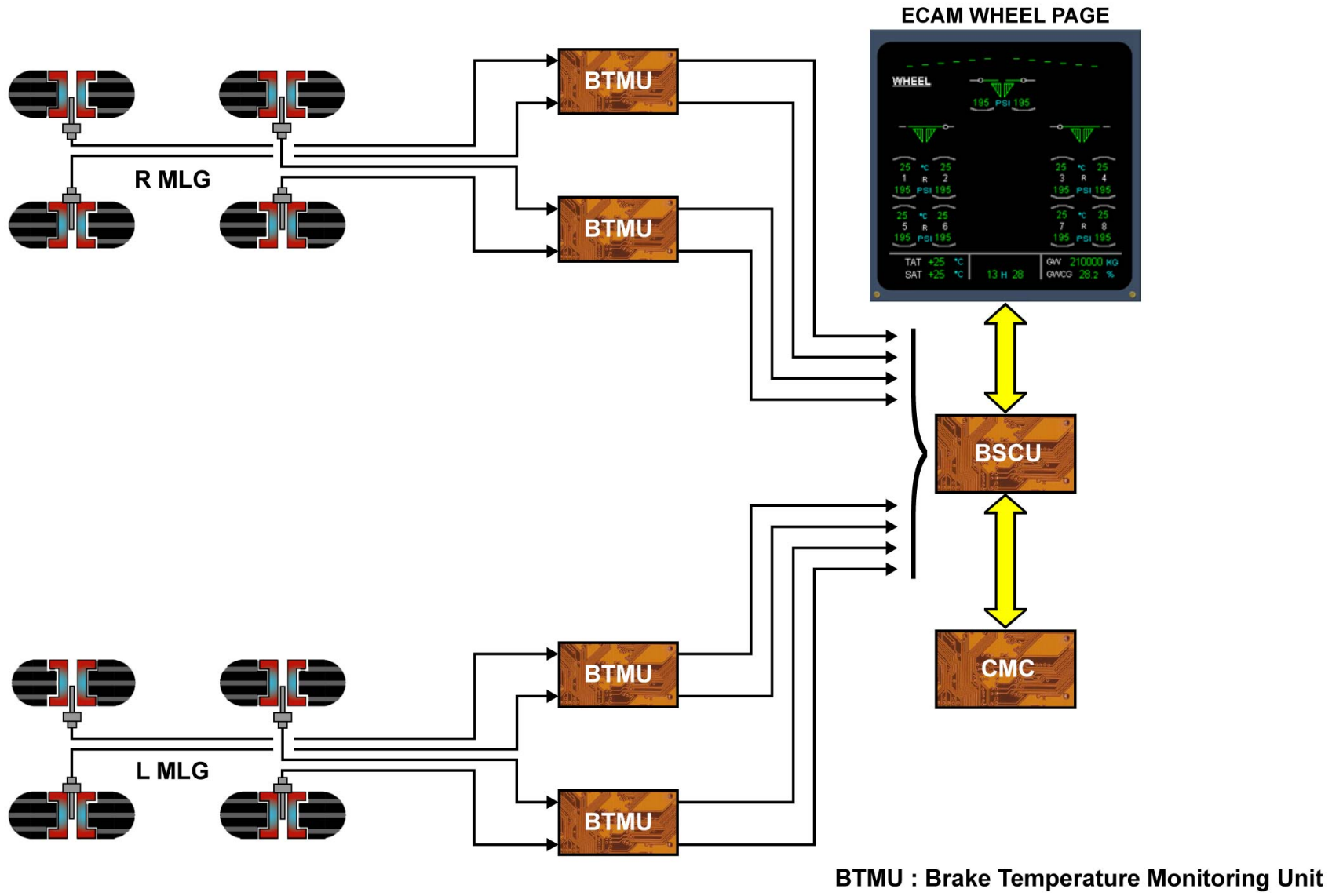

BRAKE SYSTEM TEMPERATURE

G7508471 - G3NT1T0 - FM32DA000000001

BRAKE TEMPERATURE AND COOLING SYSTEM D/O (3)

BRAKE COOLING

The brake cooling system is a manually controlled system that decreases the brake temperature. The system is usually used on ground as soon as the landing gear is extended and locked down.
When a brake is hotter than the overheat temperature threshold, the HOT sign of the pushbutton comes on amber.
When the pushbutton, on the landing gear panel, is manually operated, the ON light comes on and controls the operation of the system. It connects the brake fan relays, which operate to supply 115 VAC to the brake fan.

G7508471 - G3NT1T0 - FM32DA000000001

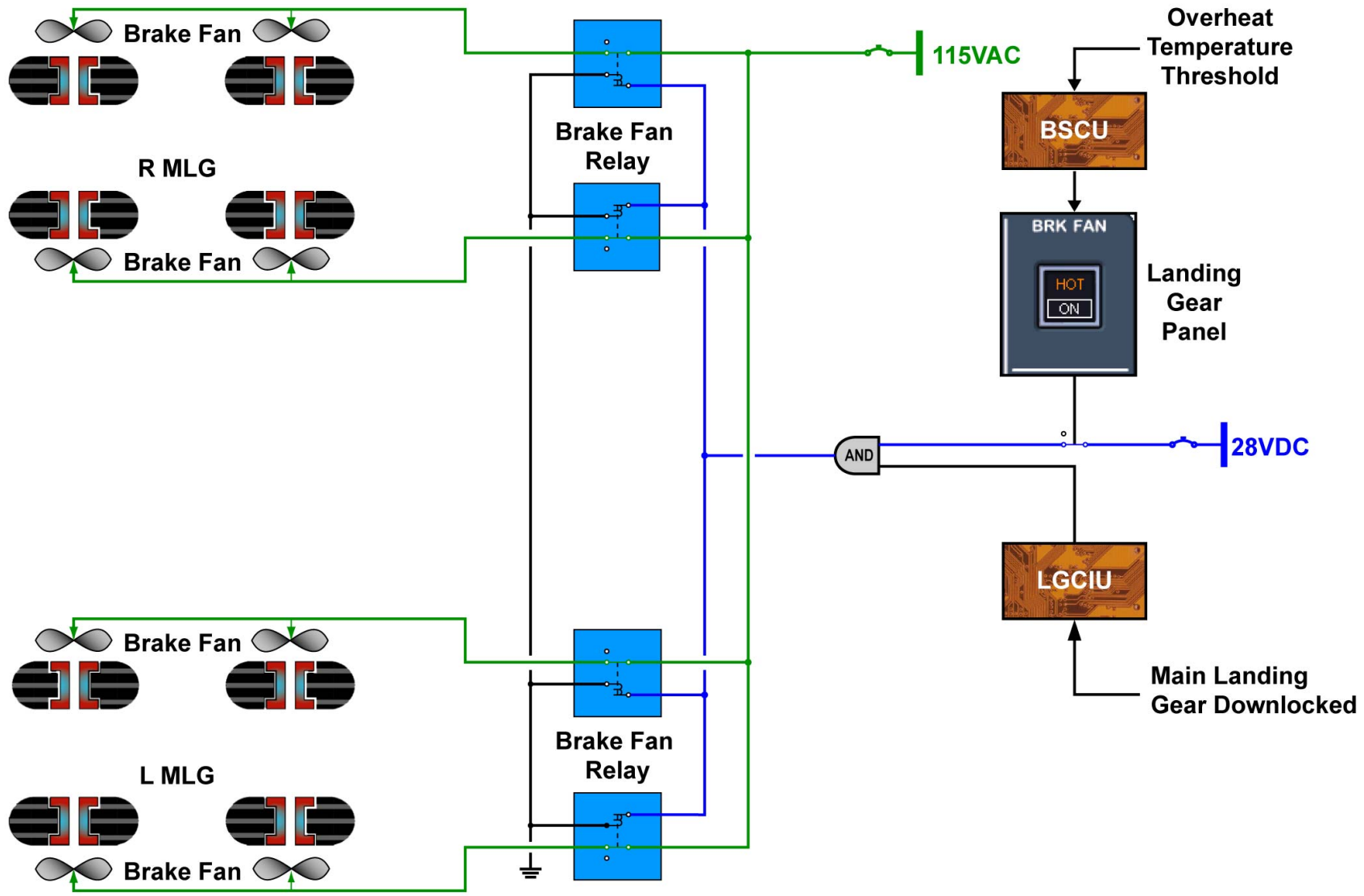

BRAKE COOLING

G7508471 - G3NT1T0 - FM32DA000000001

TPIC D/O (3)

PURPOSE

The Tire Pressure Indicating System (TPIS) continuously monitors the absolute pressure of each individual tire and provides cockpit indications and warnings.

PRESSURE SENSOR

A pressure sensor installed in the wheel rim measures the pressure of each tire. The pressure sensor gives a DC signal from 0 to 100mV in proportion to the pressure.

ROTATING MECHANISM

The rotating mechanism serves to transmit the tire pressure signal from the wheel to the axle. The rotating transmitter also provides the necessary power supply for the electronic module and the pressure sensor in the form of a 3125Hz signal.

ELECTRONIC MODULE

The integrated electronic module amplifies the signal from the pressure sensor and changes the voltage into frequency by means of a converter. The voltage to frequency converter gives a signal which varies from 50 to 100kHz for a pressure range from 0 to 300 psi.

ROTATING TRANSMITTER

The rotating transmitter transmits the tire pressure value from the wheel to the TPIC.

TPIC

The detection unit in TPIC comprises a microprocessor which provides data processing and distribution of each tire pressure including normal and abnormal pressure signals for ECAM indication and Centralized Maintenance System (CMS) monitoring. The TPIC permanently performs a test of the unit itself, the rotating mechanism and the pressure sensor. The test is only stopped for data processing and distribution.

G7508471 - G3NT1T0 - FM32D900000001

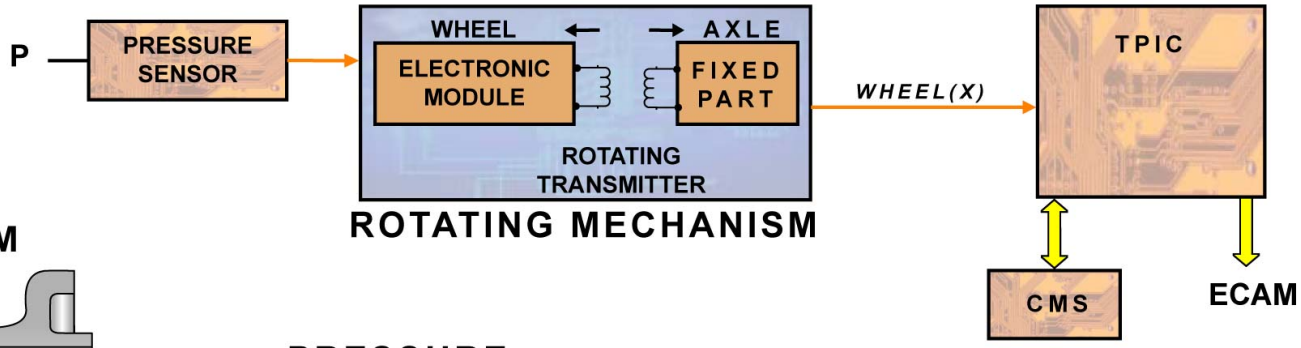

ROTATING MECHANISM

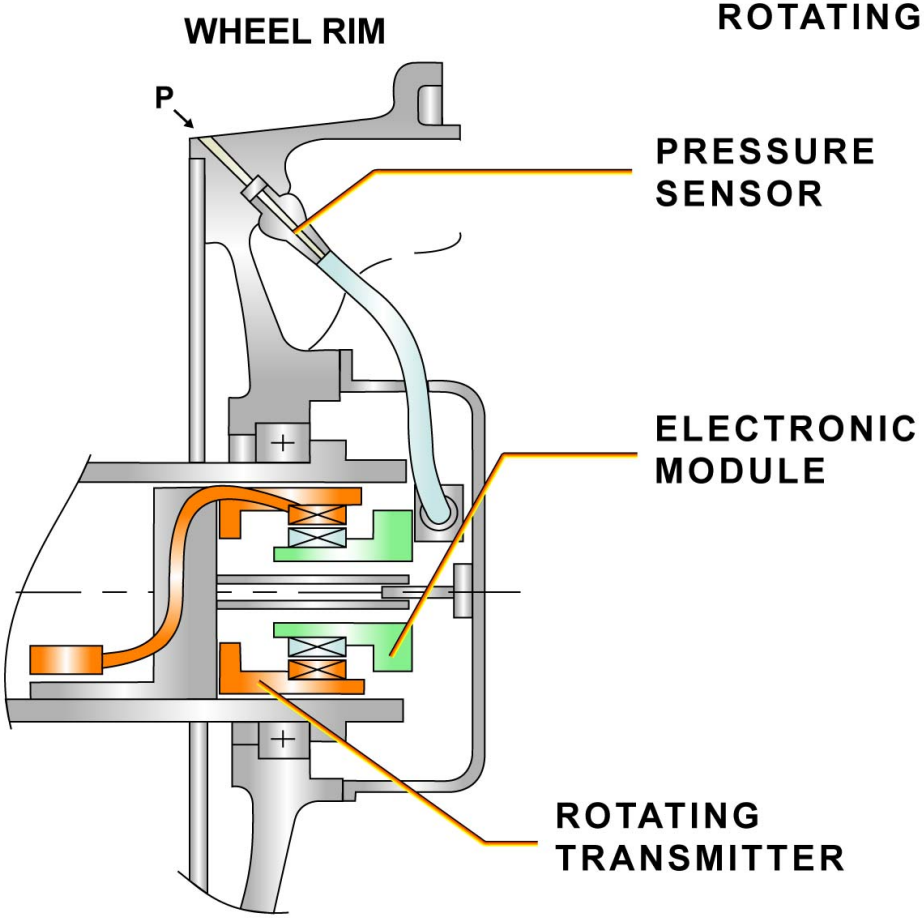

PURPOSE ... TPIC

G7508471 - G3NT1T0 - FM32D900000001

NOSE WHEEL STEERING D/O (3)

GENERAL

The nose wheel steering (N/WS) system controls the direction of the A/C on the ground by acting on the position of the nose wheels (N/Ws) in relation to the A/C centerline, as a function of the relevant steering command. A dual system computer - the Braking/Steering Control Unit (BSCU) - controls and monitors the steering system. The steering system is supplied by the green hydraulic system.

G7508471 - G3NT1T0 - FM32D800000003

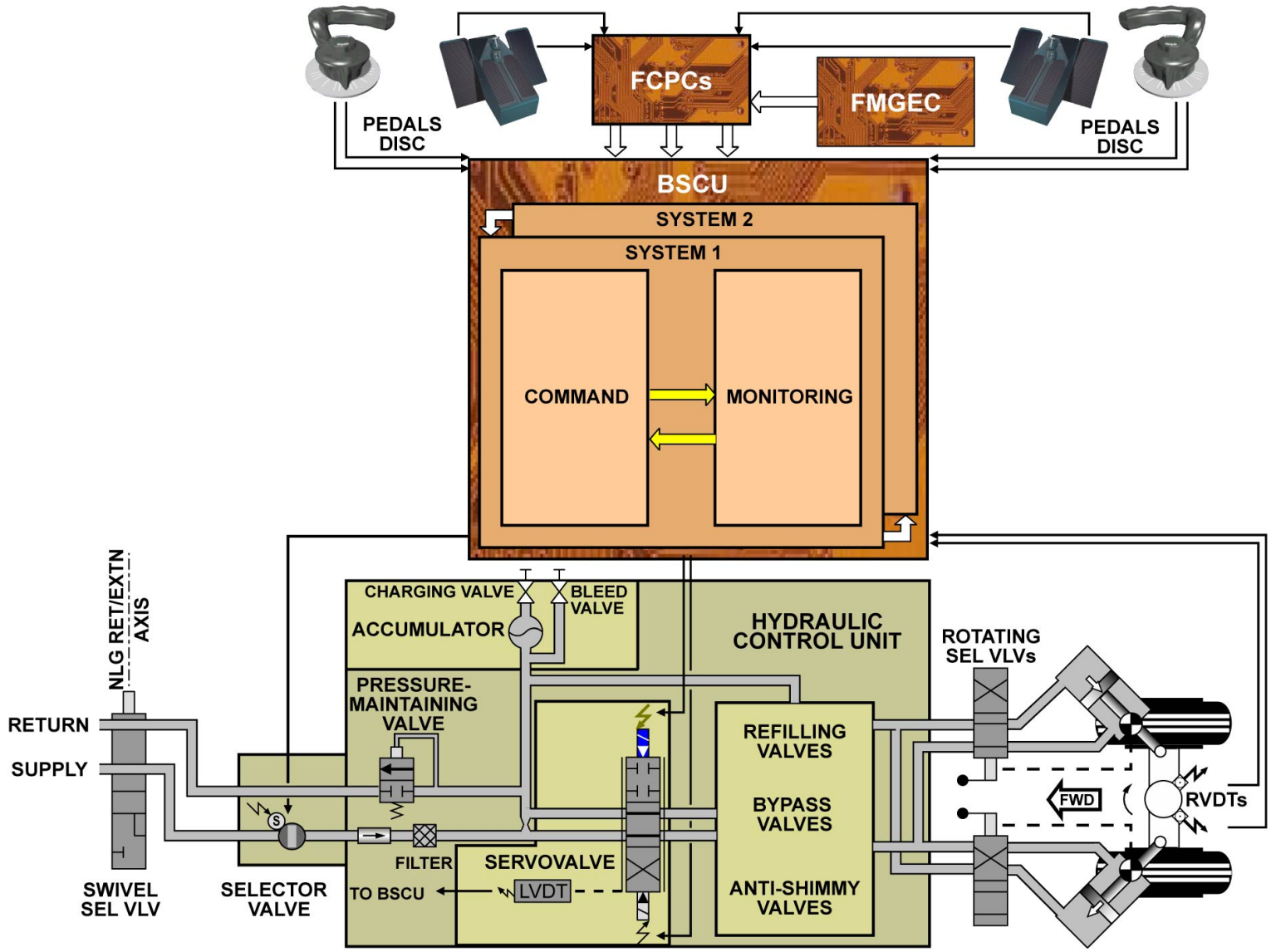

GENERAL

G7508471 - G3NT1T0 - FM32D800000003

NOSE WHEEL STEERING D/O (3)

CONTROLS

Steering command inputs come from 3 independent sources: the dedicated steering handwheels, rudder pedals and the autopilot guidance orders. The steering angle decreases in proportion to the increase in the A/C speed. In case of simultaneous action, orders are added algebraically.

HANDWHEELS

The maximum steering angle using the handwheel is ±72° when the ground speed is less than 40 kt.

PEDALS AND AUTOPILOT

Steering orders from the pedals and the autopilot are sent to the BSCU via the 3 Flight Control Primary Computers (FCPCs). The maximum steering angle using the pedals and the autopilot is ±6° when the ground speed is less than 100 kt. When a pedal disc P/B is pressed in, N/WS by the pedals is disconnected.

G7508471 - G3NT1T0 - FM32D800000003

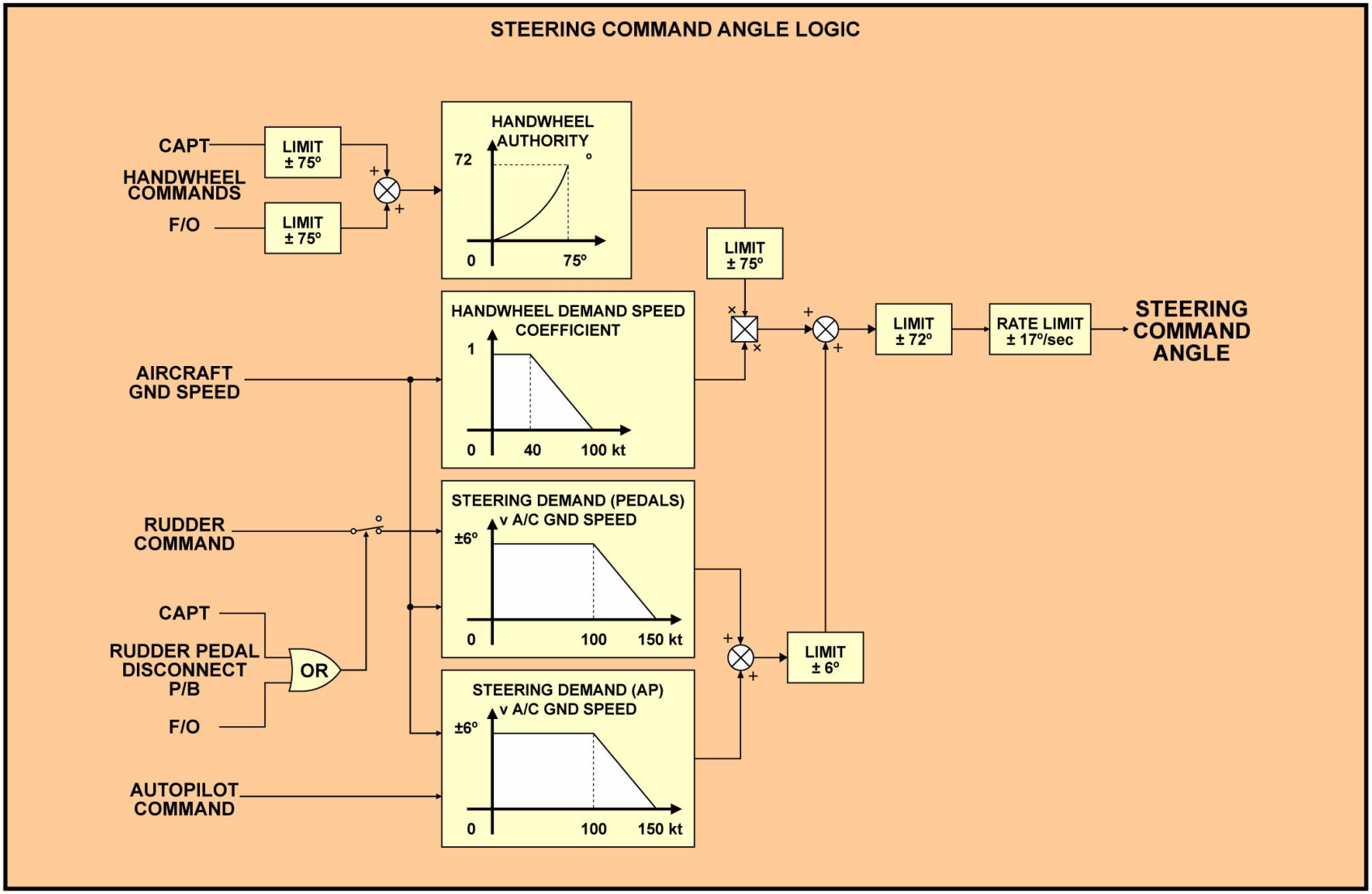

CONTROLS - HANDWHEELS & PEDALS AND AUTOPILOT

NOSE WHEEL STEERING D/O (3)

BSCU

The two systems of the BSCU are supplied independently. Each system is divided into two channels, a monitoring channel and a command channel. The command channel calculates and generates the command signals while the monitoring channel checks if the command channel is operating correctly. In order to maintain maximum steering system availability, the BSCU and most of its electrical peripherals are duplicated and segregated into system 1 and system 2. The two systems switch over automatically at each L/G down selection, or in case of system 1 or 2 failure.
The BSCU uses the steering inputs to calculate the required steering angle, the rate of movement and the direction to turn. It sends steering outputs to the electro-hydraulic components: selector valve and servovalve. The BSCU receives servovalve position feedback through its Linear Variable Differential Transducer (LVDT) and sliding tube position feedback through 2 Rotary Variable Differential Transducers (RVDTs) in order to servo-loop the steering function.

PRE-LANDING SELF TEST

In flight, after the L/G has extended, the BSCU does a test sequence to check the availability of the steering system. The test sequence checks the capability of the BSCU to control and monitor the correct operation of the selector valves and the servovalve and their inhibition in case of failure.

NOTE: Note that during the test sequence, commanded steering movements are checked and the nose wheels move slightly.

STEERING ACTIVATION LOGIC

The steering system is activated in steering mode when the conditions displayed on the screen are satisfied.

G7508471 - G3NT1T0 - FM32D800000003

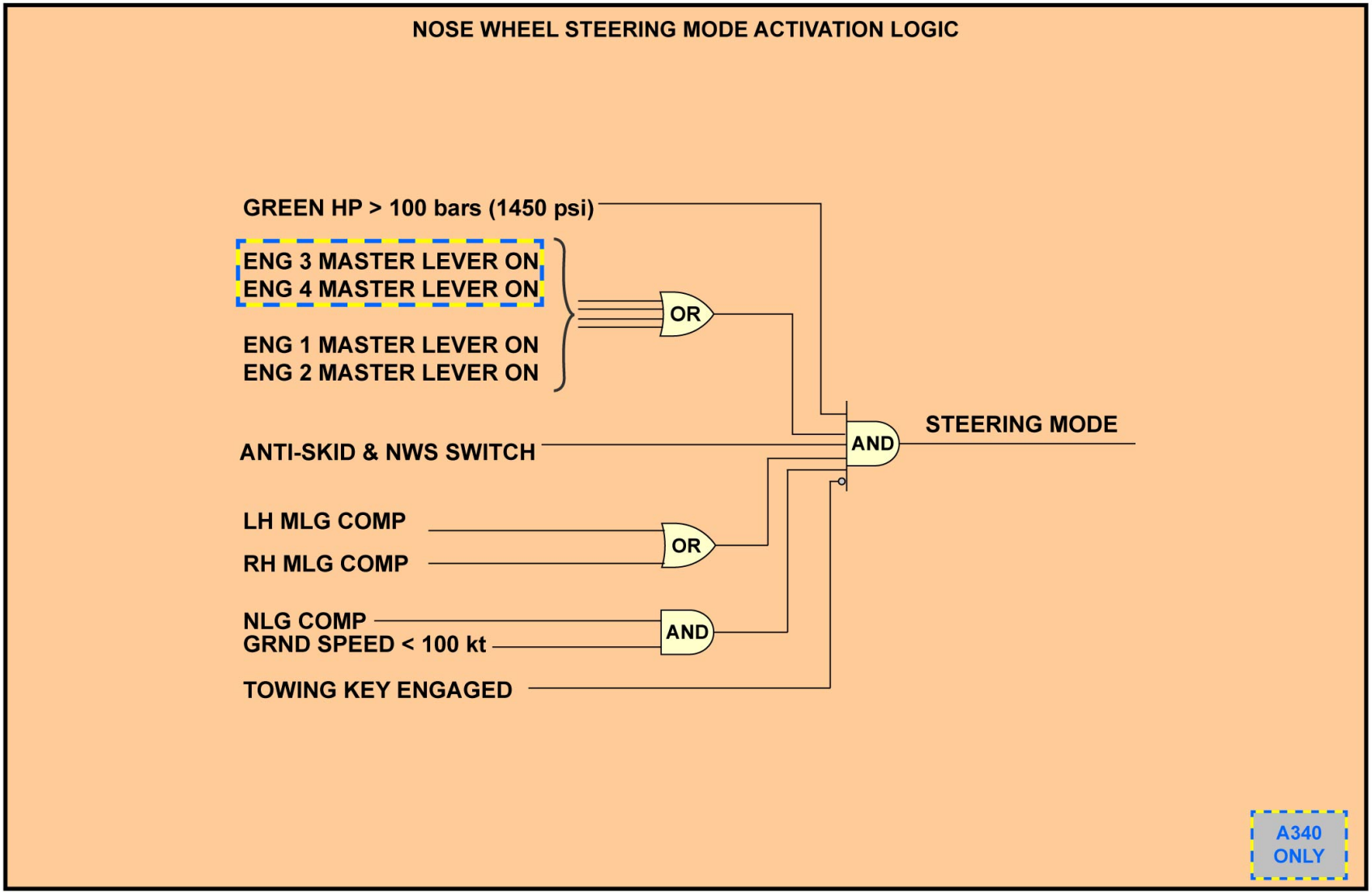

BSCU & STEERING ACTIVATION LOGIC

G7508471 - G3NT1T0 - FM32D800000003

NOSE WHEEL STEERING D/O (3)

MONITORING INTERFACES

Steering system data, such as fault indications and system status, is displayed on the EWD and the SD on the wheel page. Fault indications are stored in the BITE of the BSCU and are also reported to the Central Maintenance System (CMS).

OPERATION

In flight, the N/Ws are automatically driven to the center position by two cams on full extension of the shock absorber. When the shock absorber is pressed, the upper cam moves upward to disengage from the lower cam, and this lets the sliding member rotate. When the gear is extended, the swivel selector valve lets the hydraulic pressure pressurize the hydraulic control unit to the servovalve. When the Nose Landing Gear (NLG) is retracted, the swivel selector valve isolates the system from hydraulic pressure.
The selector valve is energized open when all the conditions are fulfilled. At touchdown, the BSCU lets hydraulic pressure be ported. The servovalve supplies the hydraulic pressure to the steering actuators in proportion to an electrical signal from the BSCU. This valve has two coils - each coil is connected to one system of the BSCU. The LVDT sends the data to the monitoring channel of the BSCU to give the correct position of the servovalve. The supply pressure is routed to the correct chamber of each steering actuator through the rotating selector valves. The RVDT monitors the correct angular position of the N/Ws and sends data to the command and monitoring channels of the BSCU.

G7508471 - G3NT1T0 - FM32D800000003

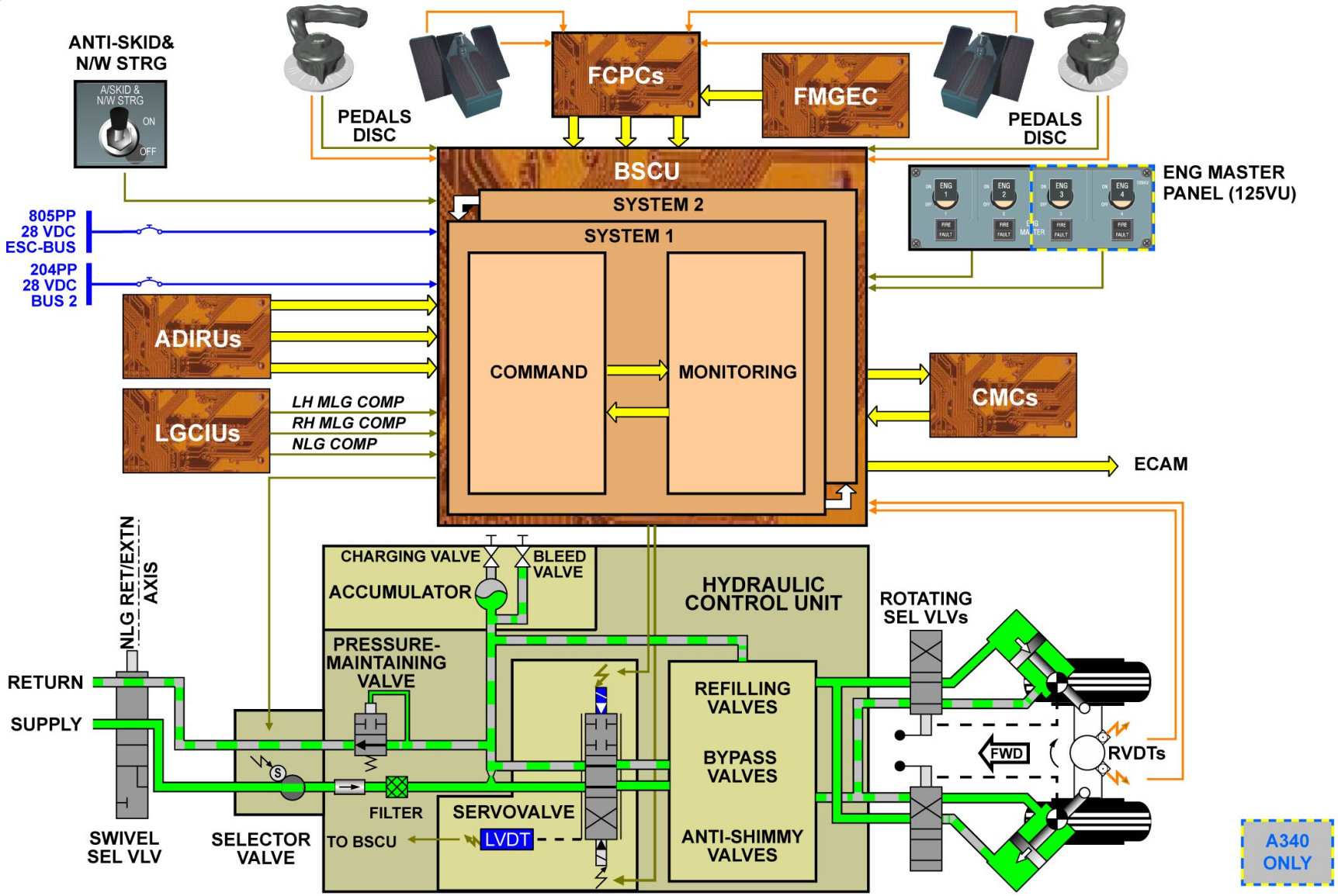

MONITORING INTERFACES & OPERATION

G7508471 - G3NT1T0 - FM32D800000003

NOSE WHEEL STEERING D/O (3)

OPERATION (continued)

STEERING ACTUATOR MECHANISM

The mechanically-controlled rotating selector valves connect two service lines to their related steering actuator. Each service line is used either as a supply or return line, or is connected to the full bore or annulus end of the actuator as necessary. The configuration of the valve changes when the N/W moves past a certain angle. Thus, the service lines are always connected to the correct end of the actuator.

G7508471 - G3NT1T0 - FM32D800000003

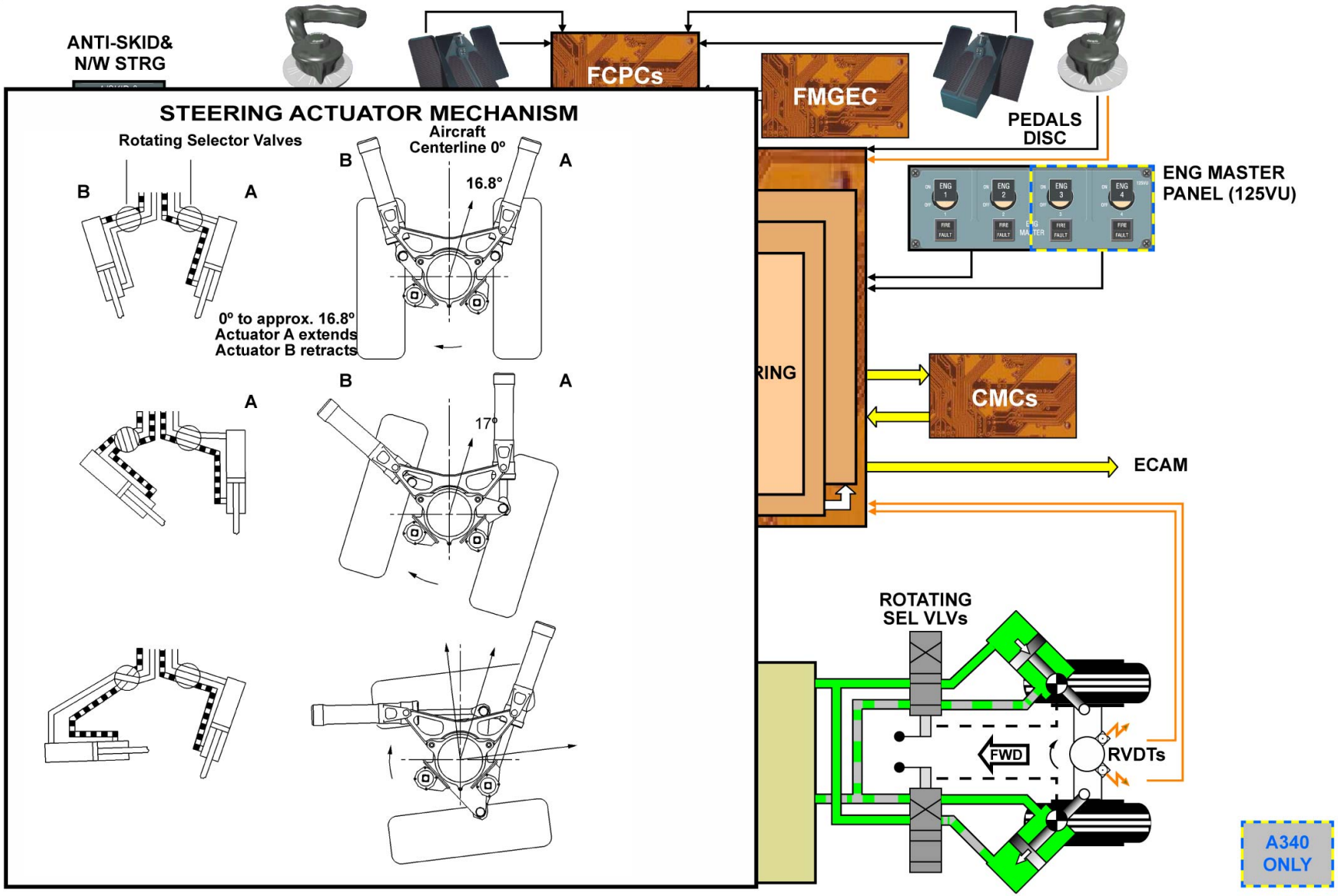

OPERATION - STEERING ACTUATOR MECHANISM

G7508471 - G3NT1T0 - FM32D800000003

NOSE WHEEL STEERING D/O (3)

OPERATION (continued)

CASTORING AND SHIMMY DAMPING

In the event of either dual BSCU power supply loss, dual BSCU system failure or hydraulic system failure, N/WS can freely castor into the direction of A/C travel. When the N/W is castoring, a residual pressure of 15 bars (217 psi) is maintained in the system by the pressure-maintaining valve and the accumulator. The accumulator and the refilling valves prevent cavitation in the actuator chambers. The hydraulic fluid in the actuators can move from one actuator to the other through the anti-shimmy and by-pass valves. These valves operate to power the steering mode and to reduce the pressure. The anti-shimmy damping function is the same as in the powered steering mode.

G7508471 - G3NT1T0 - FM32D800000003

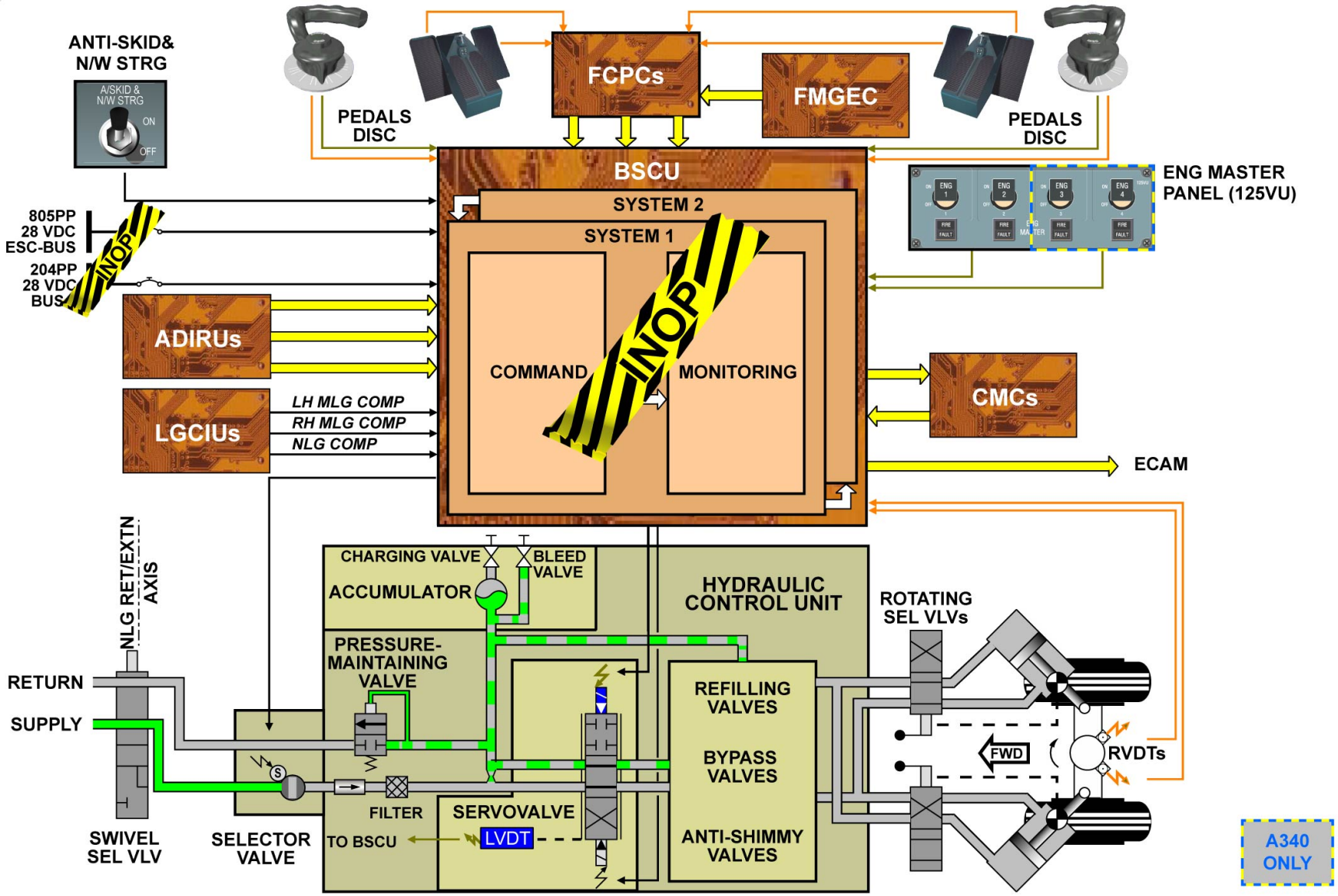

OPERATION - CASTORING AND SHIMMY DAMPING

G7508471 - G3NT1T0 - FM32D800000003

NOSE WHEEL STEERING D/O (3)

TOWING

Towing of the A/C via the nose leg-towing bracket is done without any mechanical disconnection of the steering mechanism. The maximum authorized towing angle is ±65°. This avoids inducing excessive loads on the MLG during towing. Markings painted on the gear-driven NLG doors identify the maximum towing angle. A steering system deactivation facility, in the form of a lever-operated switch mounted on an electrical deactivation box on the NLG, is provided for ground crew use when the A/C has to be towed. This deactivates the steering control system to let the N/Ws castor and be freely rotated by the towing vehicle. In towing configuration, the lever must be secured by a safety pin. The control box also has an indicator light with a light check button, which is illuminated when the park brake handle is set to on.

NOTE: Note that the steering actuator mechanical stop of ±95° must not be reached.

G7508471 - G3NT1T0 - FM32D800000003

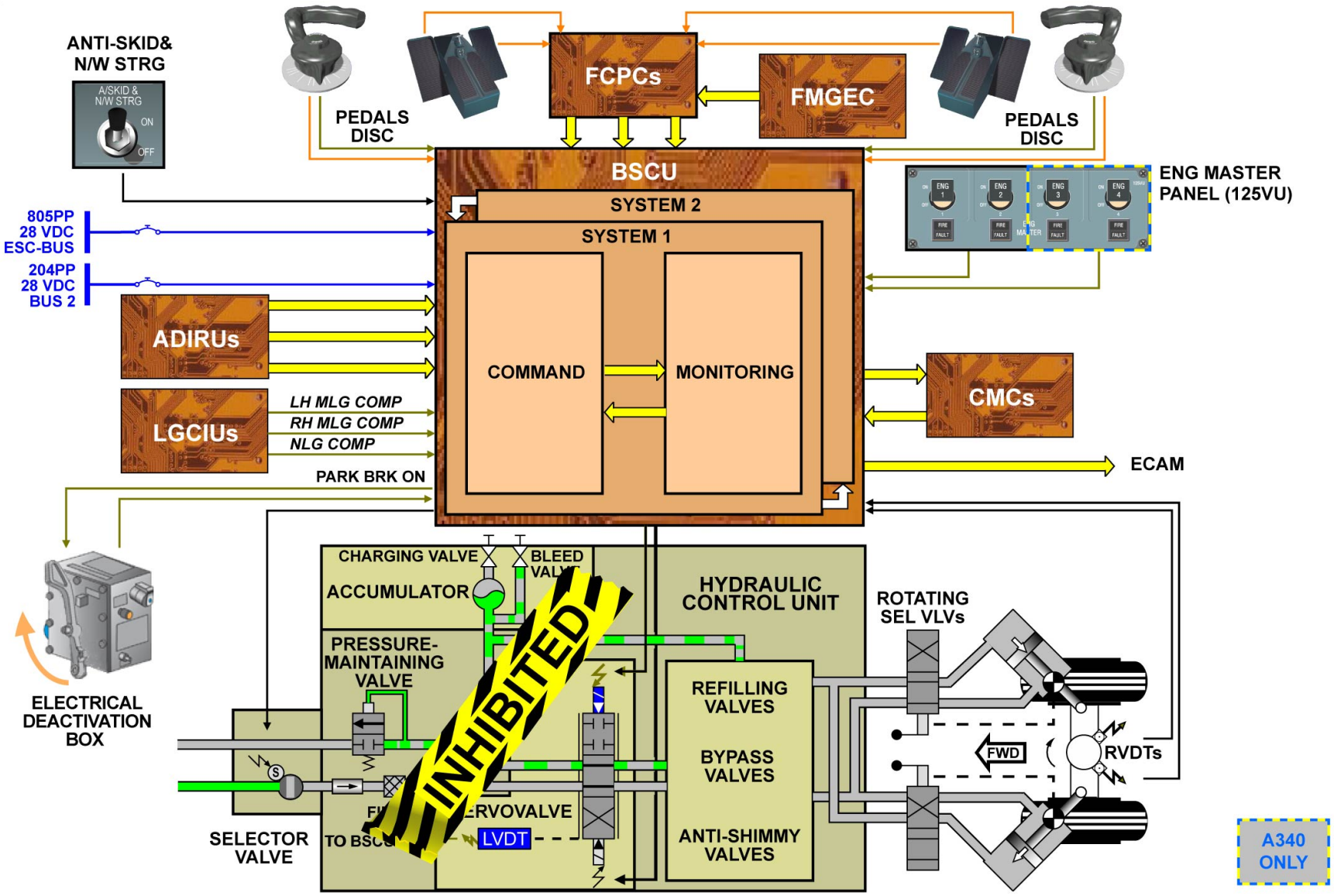
ANTI-SKID&
N/W STRG
A/SKID &
N/W STRG
ON
OFF
PEDALS
DISC
FCPCs
FMGEC
PEDALS
DISC
BSCU
SYSTEM 2
SYSTEM 1
COMMAND
MONITORING
ENG MASTER
PANEL (125VU)
805PP
28 VDC
ESC-BUS
204PP
28 VDC
BUS 2
ADIRUs
LGCIUs
LH MLG COMP
RH MLG COMP
NLG COMP
PARK BRK ON
CMCs
ECAM
CHARGING VALVE
BLEED
VALVE
ACCUMULATOR
HYDRAULIC
CONTROL UNIT
ROTATING
SEL VLVs
PRESSURE-
MAINTAINING
VALVE
INHIBITED
REFILLING
VALVES
BYPASS
VALVES
ANTI-SHIMMY
VALVES
FWD
RVDTs
ELECTRICAL
DEACTIVATION
BOX
SELECTOR
VALVE
TO BSCU
LVDT
A340
ONLY

TOWING

NOSE WHEEL STEERING D/O (3)

STEERING ANGLE PROTECTION

The NLG Steering Angle Protection System gives a visual warning of excess angular travel of the NLG steering during towing and pushback operations. In the warning condition, which operates at more than 93 degrees, it shows that possible damage can have occurred to the components of the NLG steering system. Two warning lights, one on the NLG and one on the flight deck, come on when this condition has occurred.

The system uses two proximity sensors, one installed on each side of the NLG, which operate with a single target. The target is attached below the upper attachment points of the torque links (which move with the direction of the nosewheel). When the target nears one of the sensors the warning lights operate. If the circuit operates, it stays latched on until the cockpit push-button is reset. The circuit can only be reset with the a/c power supplies connected.

The system power is supplied from the aircraft or the towing tractor. Discrete signals from the Landing Gear Control and Interface Units (LGCIUs) control the a/c power supplies to the system.

NOTE: When a standard tow bar is used (that has shear pins) the NLG Oversteer warning can be ignored only if the shear pins are not damaged. If the shear pins are sheared or damaged, an inspection of the NLG must be completed.

G7508471 - G3NT1T0 - FM32D800000003

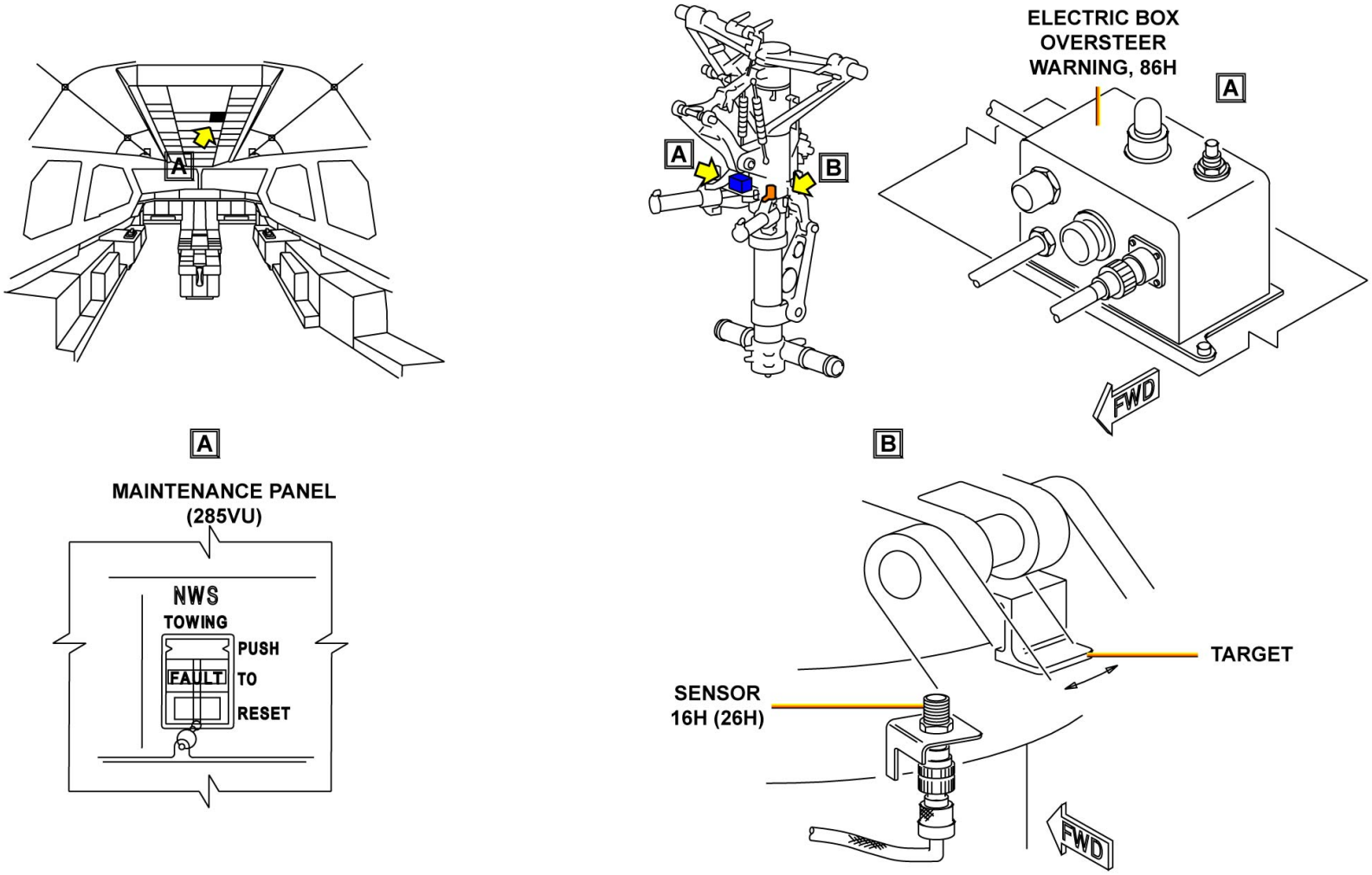

STEERING ANGLE PROTECTION

G7508471 - G3NT1T0 - FM32D800000003

LANDING GEAR MCDU PAGES (2)

EXTN/RETRN

Selecting EXTN/RETRN enables direct access to the EXTENSION/RETRACTION main menu.
All LGCIU main menus are identical.
As well as the standard CMS functions, the LGCIU menu includes a specific page.
The LGCIU SIMULATION function is displayed on the second MCDU screen, which is accessible through the scrolling keys.
Using the first left key enables access to the LANDING GEAR SIMULATION.
Using the second left key enables the LANDING GEAR SIMULATION to be confirmed.
The display shows the available alternative configuration. A selection of the related MCDU key starts the simulation sequence.
During the L/G simulation, the selected LGCIU :
- disables its outputs to the L/G and door selector valves.
- Continues to output the correct data for the L/G not selected.

This function lets the LGCIU BITE circuits send specific output signals.
These output signals relate to the flight or ground configuration and to the uplocked or downlocked configuration of each landing gear.
The line key symbol "<" shows the configuration that can be set. When there is no symbol "<", this shows the configuration that is set.
The initial configuration always shows the ground configuration.

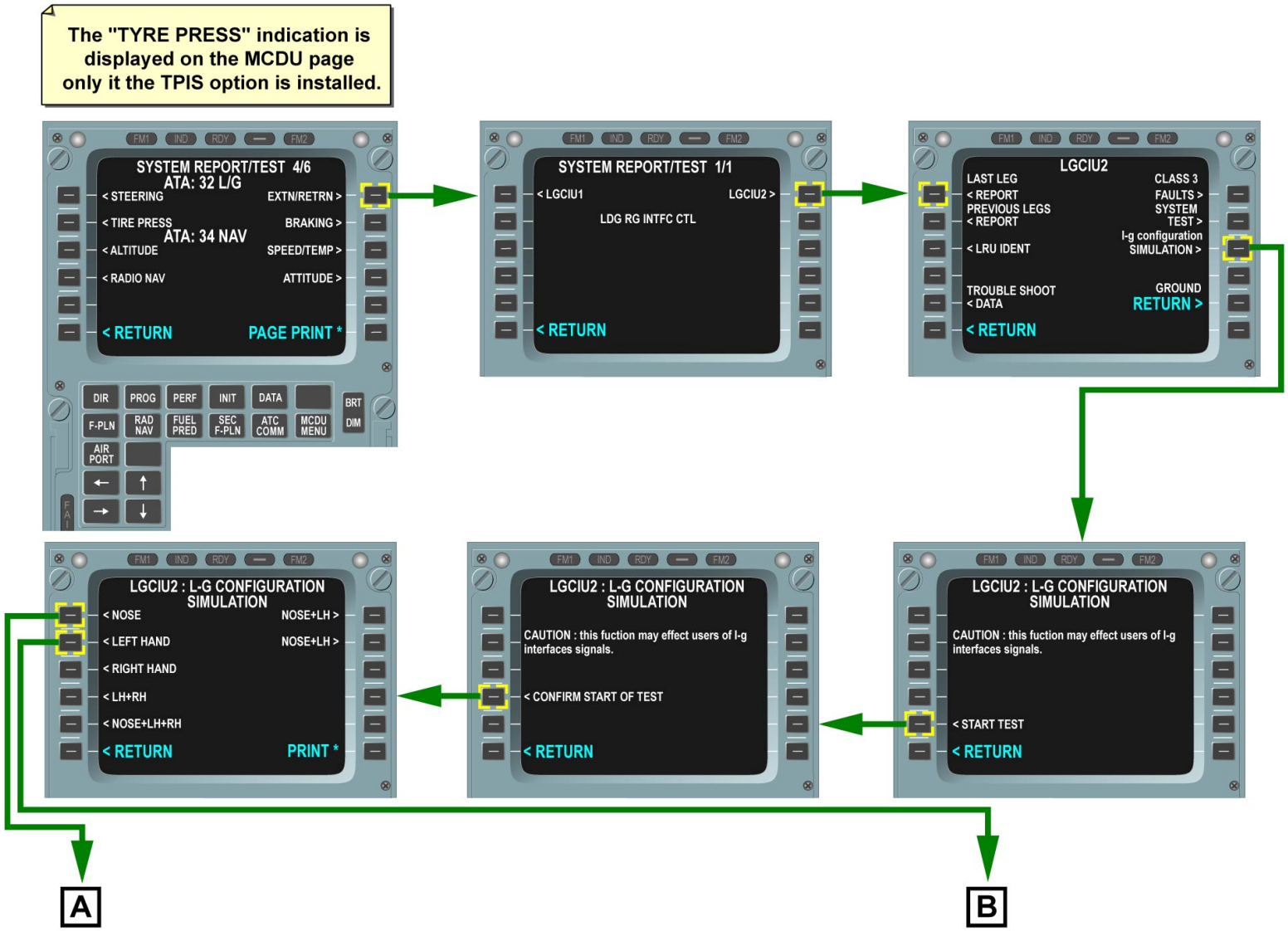

EXTN/RETRN

G7508471 - G3NT1T0 - FM32P7MCDUTST02

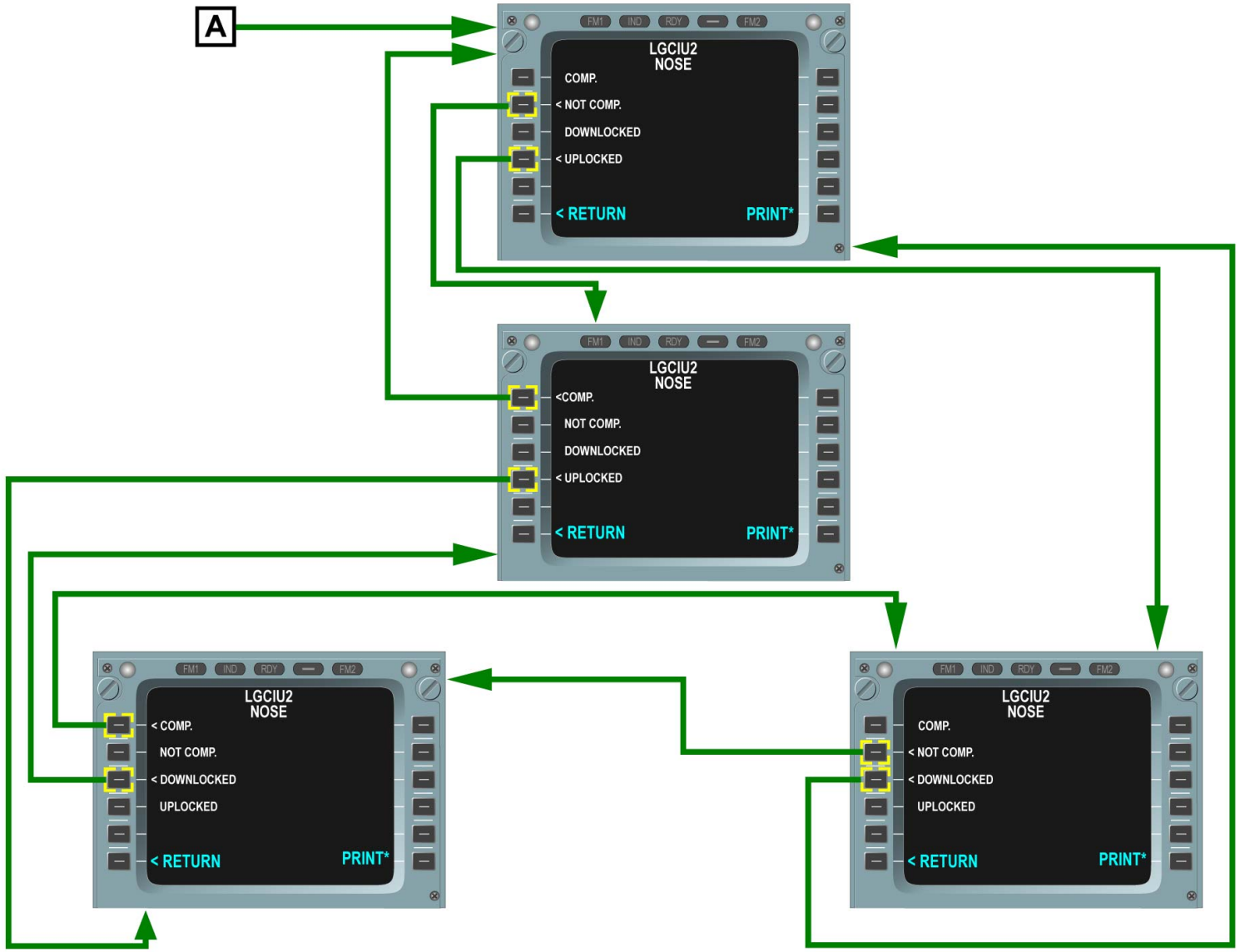

EXTN/RETRN

G7508471 - G3NT1T0 - FM32P7MCDUTST02

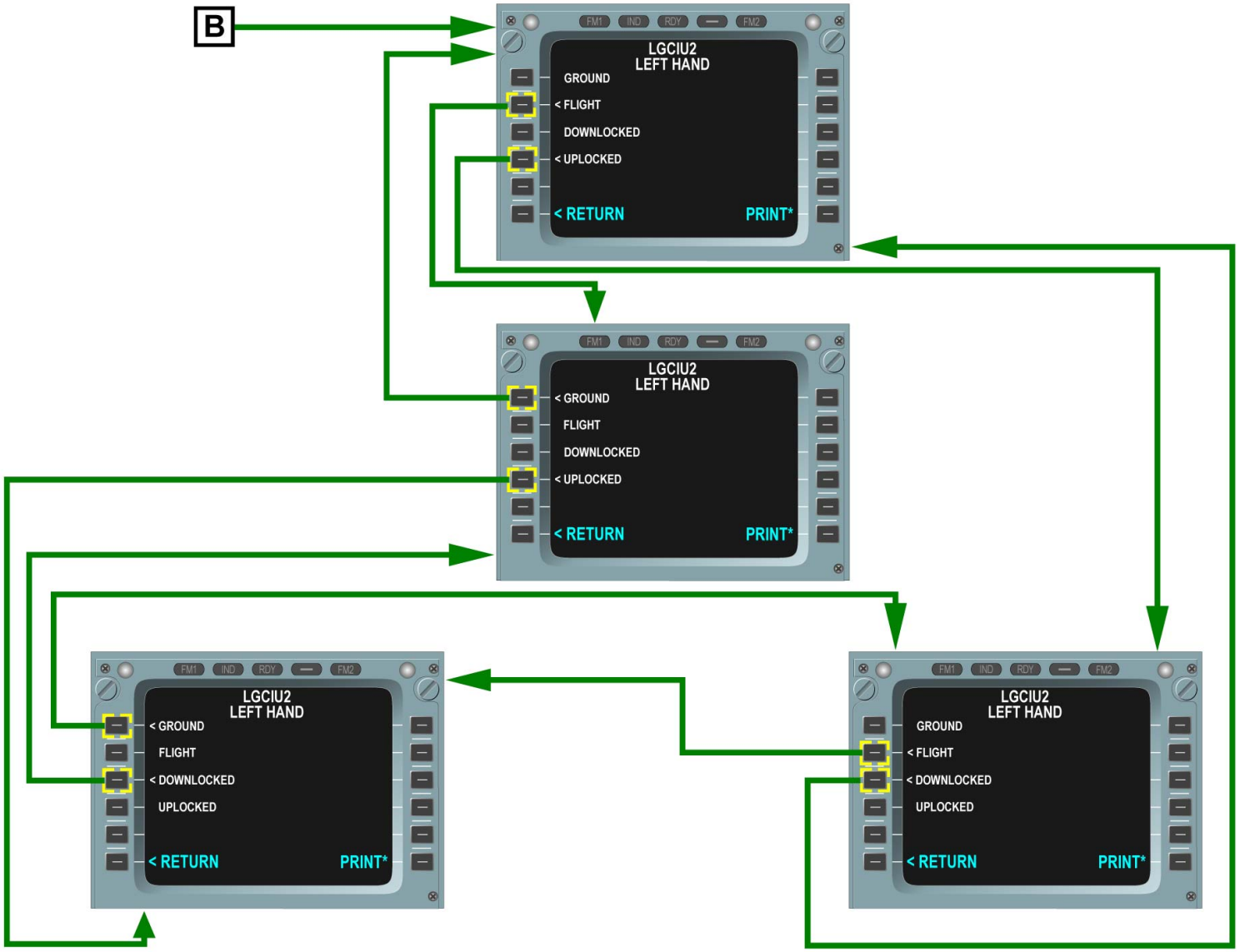

EXTN/RETRN

G7508471 - G3NT1T0 - FM32P7MCDUTST02

PUSH BACK AND TOWING (2)

PUSH BACK AND TOWING: VIDEO

This film presents the procedure for push back and towing with the nose landing gear of the A330 in normal condition. For the A340 the procedure is similar.

PUSH BACK

Make sure that the safety pins are installed on the nose, the main and the centerline gear. After the cockpit checks, energize the aircraft electrical circuits following the AMM procedure by using external power or by starting the APU. Then set batteries 1 and 2 to ON. Check the brake accumulator pressure on the triple indicator. The pointer in the green range indicates that a minimum of seven brake applications can be performed. If the pressure is too low, you have to pressurize the system through the blue electrical pump. Ask for clearance then pressurize the blue hydraulic system. When the pressure is correct, switch off the blue electrical pump. Apply the parking brake and start the APU. The ground mechanic sets the towing lever to the towing position and installs the pin. Before you install the towbar make sure that the dimension "H" is correct. Attach the towbar to the nose gear fitting.
Make sure that the towbar is equipped with:
- a damping system,
- a traction shear pin calibrated at the required value,
- a torsion shear pin calibrated at the required value.

Connect the tractor to the towbar. Carry out an inspection around the aircraft. Make sure that the area is clear. Make sure that the engine cowls are properly locked, all the doors are closed and the gear doors are closed. Remove the main wheel chocks. Disconnect the external power. Contact the cockpit so that the operator asks for clearance. In the cockpit, select VHF on the control and monitoring radio panels. Contact Air Traffic Control to request push back and towing and wait for their authorization. Set the NAVIGATION lights, BEACON lights and LOGO lights to ON. When ready, contact the ground operator. When authorized by the ground operator, release the parking brake and check the triple indicator. When the brake is OFF, the ground operators start the push back operation. Push the aircraft smoothly and slowly. If you push or tow the aircraft in an area with nearby obstacles, two operators are required at the wing tips. The maximum towing angle, left and right, is indicated by a red mark painted on the nose gear fixed door. A steering angle protection system will activate an oversteer warning light if the steering angle exceeds a predetermined value. If exceeded, an inspection of the nose landing gear has to be carried out according to the AMM procedure. If you push or tow the aircraft with the engines at IDLE, the maximum steering angle is 40 degrees on each side to avoid nose landing gear slippage. When the push back operation is completed, make sure that the nose wheels are aligned with the aircraft centerline. If not, tow the aircraft as required. In the cockpit, apply the parking brake and check the triple indicator. The towbar can be disconnected.

TOWING

During the towing operation, communications between the tractor and the cockpit can be ensured by the headset or through a VHF radio. Once in position, make sure that the nose wheels are aligned with the aircraft centerline. Inform the cockpit that the parking brake can be applied. In the cockpit, apply the parking brake and check the triple indicator. Inform the ground operator that the brake is applied, switch off the lights and set the radio to OFF. Put the wheel chocks in position. Disconnect the tow bar. Disconnect the headset. Remove the steering pin. The push back and towing operation is completed. Put the aircraft in the configuration related to the next operation.

G7508471 - G3NT1T0 - FM32P900000001

PUSH BACK AND TOWING: VIDEO - PUSH BACK & TOWING

G7508471 - G3NT1T0 - FM32P900000001

LANDING GEAR SYSTEM BASE MAINTENANCE (3)

INTRODUCTION

This module will highlight the gas and fluid replenishment applicable to the L/G shock absorbers.

WARNING: MAKE SURE THAT THE SAFETY DEVICES AND THE WARNING NOTICES ARE IN POSITION BEFORE YOU START A TASK ON OR NEAR:
- THE FLIGHT CONTROLS,
- THE FLIGHT CONTROL SURFACES,
- THE L/G AND THE RELATED DOORS,
- COMPONENTS IN MOTION.

MOTION OF COMPONENTS CAUSES DEATH OR INJURY TO PERSONS.
MAKE SURE THAT THE GROUND SAFETY-LOCKS ARE CORRECTLY INSTALLED ON THE L/G AND ON THE L/G DOORS.
USE SOLVENTS AND CLEANING AGENTS IN WELL-VENTILATED AREAS.
DO NOT GET IN CLOSE CONTACT WITH COMPRESSED GAS. GAS CAN CAUSE INJURY AND CONTAMINATE YOUR BLOOD AND CAUSES DEATH.

G7508471 - G3NT1T0 - FM32Y2BASEMCE03

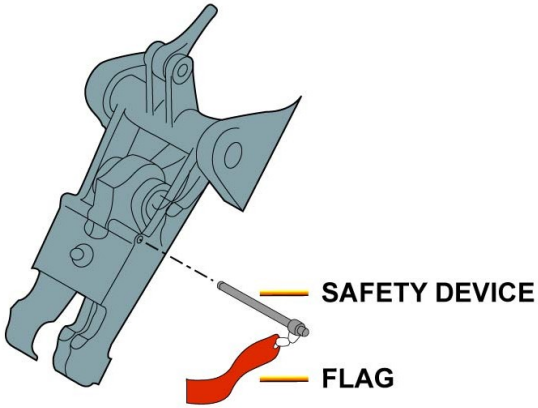

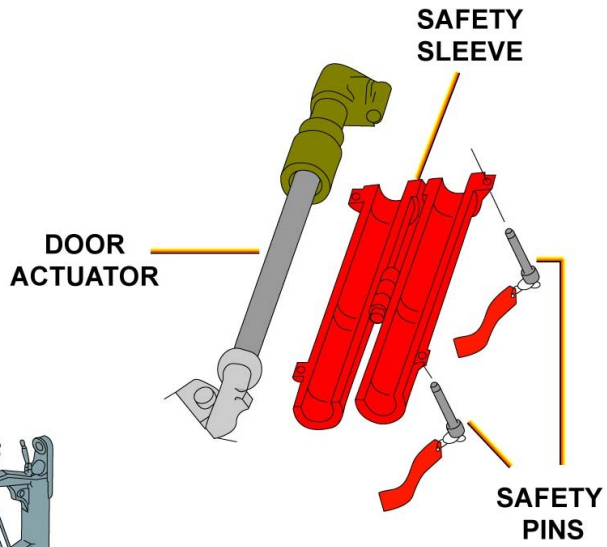

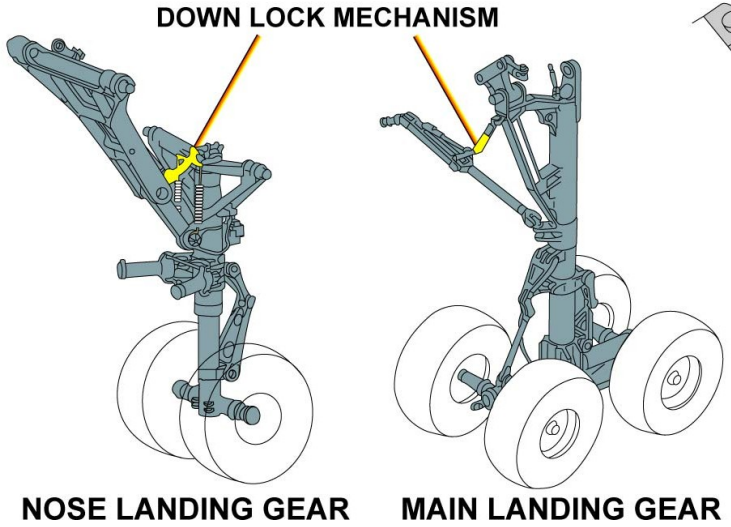

INTRODUCTION

G7508471 - G3NT1T0 - FM32Y2BASEMCE03

LANDING GEAR SYSTEM BASE MAINTENANCE (3)

GAS REPLENISHMENT OF THE MLG SHOCK ABSORBER

Put a warning notice in the cockpit to tell personnel not to operate the L/G controls.
Make sure that the green hydraulic system is depressurized.
Make sure that the safety devices are installed on the MLG.
Open the MLG doors and fit the MLG door safety devices.

CAUTION: DO NOT INFLATE THE MLG SHOCK ABSORBER AT THE LOWER VALVE. IF YOU USE THE LOWER VALVE, HYDRAULIC FLUID WILL ESCAPE.

Measure and write down the shock absorber dimension H.
Measure and write down the surface temperature of the aluminum piston adjacent to the bleed inflation valve.
Use the inflation chart to find out the correct pressure from the temperature and dimension H measurements you have just recorded.
Connect the charging equipment to the upper bleed/inflation valve and read the pressure on the pressure gauge.
If the measured pressure is lower than the inflation chart pressure, the shock absorber must be inflated. If it is higher, the shock absorber must be deflated.
If the dimension H changes during the adjustment, the procedure must be repeated from the beginning.
Remove the Ground Support Equipment (GSE), special tooling and access platform. Remove all warning notices.

GAS REPLENISHMENT OF THE MLG SHOCK ABSORBER

...

Job set-up

...

Make sure that:

- ✓ - Warning notice is put in the cockpit.
- ✓ - Green hydraulic system is depressurized.
- ✓ - Safety devices are installed on the MLG.
- ⇨ - MLG doors are open and fitted with safety devices.

...

Procedure

...

Gas replenishment of the MLG shock absorber

...

Close-up

...

L/G LEVER (312VU)

GREEN HYD. SYSTEM (DEPRESSURIZED)

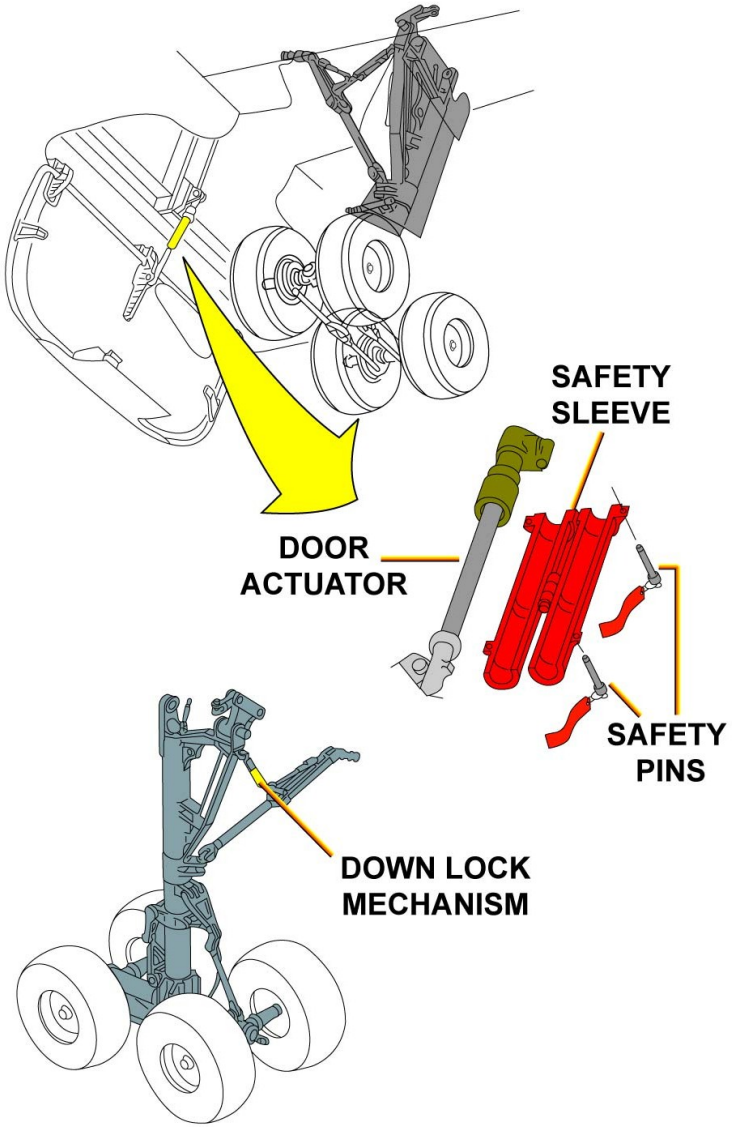

GAS REPLENISHMENT OF THE MLG SHOCK ABSORBER

GAS REPLENISHMENT OF THE MLG SHOCK ABSORBER

...

✓ **Job set-up**

...

✓ **Make sure that:**

...

⇨ **Procedure**

...

⇨ **Gas replenishment of the MLG shock absorber**

✓ - CAUTION: DO NOT INFLATE AT THE LOWER VALVE.

✓ - Measure and write down dimension H.

✓ - Measure and write down temperature.

⇨ - Determine the pressure using the inflation chart.

...

...

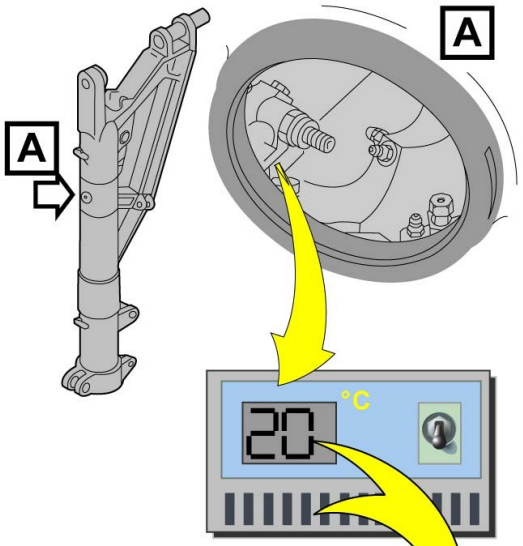

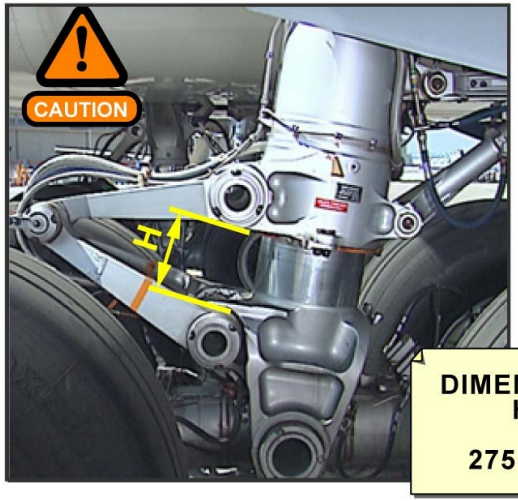

DIMENSION H

275 mm

TEMP °C	-30	-25	-20	-15	-10	-5	0	5	10	15	20	25	30
H (mm)	GAUGE PRESS (bar)												
275	68	70	73	75	78	81	83	86	89	92	95	98	101

The inflation chart gives:

95 bars

GAS REPLENISHMENT OF THE MLG SHOCK ABSORBER

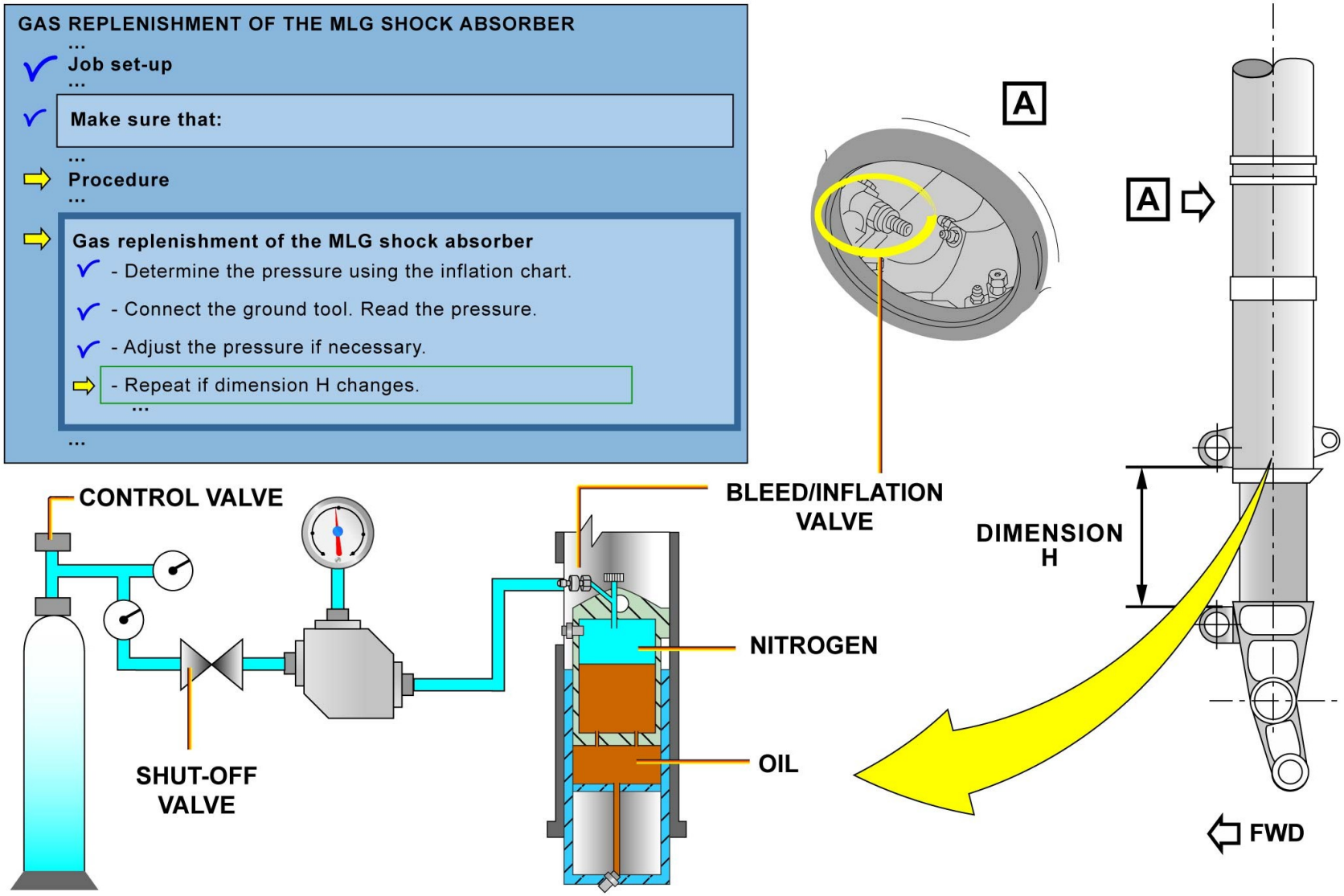

GAS REPLENISHMENT OF THE MLG SHOCK ABSORBER

G7508471 - G3NT1T0 - FM32Y2BASEMCE03

GAS REPLENISHMENT OF THE MLG SHOCK ABSORBER

...
✓ Job set-up
...
✓ Make sure that:
...
✓ Procedure
...
✓ Gas replenishment of the MLG shock absorber
...
✓ Close-up
...
✓ - Remove tools, access platform and warning notices.

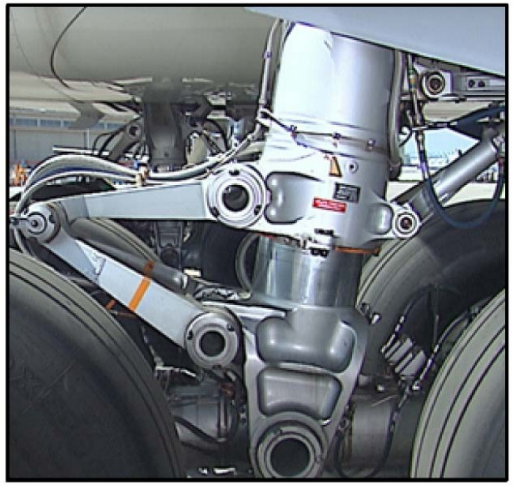

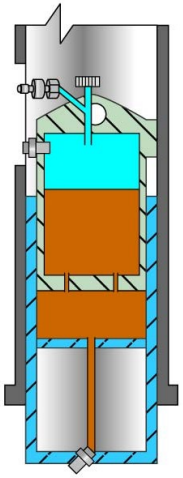

TASK COMPLETED

GAS REPLENISHMENT OF THE MLG SHOCK ABSORBER

This Page Intentionally Left Blank

G7508471 - G3NT1T0 - FM32Y2BASEMCE03

LANDING GEAR SYSTEM BASE MAINTENANCE (3)

GAS REPLENISHMENT OF THE NLG SHOCK ABSORBER

Make sure the NLG wheels are central to the A/C axis.
Put warning notices in the cockpit to inform personnel not to operate the L/G and the nosewheel steering controls.
Make sure that the green hydraulic system is depressurized.
Deactivate the nosewheel steering.
Open the NLG doors and fit the NLG door safety devices.
Make sure that the bottom chamber pressure is at least 6.9 bars (100 PSI) higher than the top chamber pressure.
Measure and write down the shock absorber dimension H.
Measure the ambient temperature.
Adjust nitrogen pressure until the dimension H agrees ±1 mm with the top chamber pressure and the ambient temperature as shown in the graphic.
Make sure that the bottom chamber pressure is still at least 6.9 bars (100 PSI) higher than the top chamber pressure.
If measured top chamber pressure is higher than nominal top chamber pressure shown on the graphic, deflate at the top chamber bottom port, and adjust the dimension H as seen before.
Now, the pressures in the top and bottom chambers are adjusted. Check again that the bottom chamber pressure is at least 6.9 bars (100 PSI) higher than the top chamber pressure. If not, repeat the procedure.
Pressurize the green hydraulic system and make sure that the NLG wheels are still in the central position. Reactivate the nosewheel steering.
De-pressurize the green hydraulic system, remove the placards, tooling and equipment. Remove the safety devices from the NLG doors and close the doors.

G7508471 - G3NT1T0 - FM32Y2BASEMCE03

GAS REPLENISHMENT OF THE NLG SHOCK ABSORBER

...

Job set-up

...

Make sure that:

- Nose Landing Gear (NLG) wheels are aligned.
- Warning notices are put in the cockpit.
- Green system is depressurized.
- ...

...

Procedure

...

Gas replenishment of the NLG shock absorber

...

Close-up

...

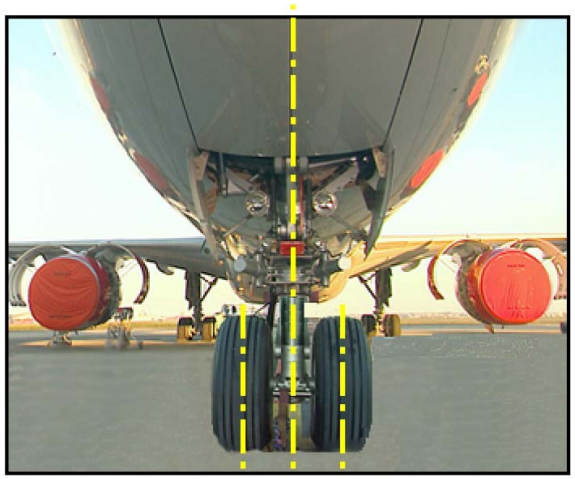

L/G LEVER (312VU)

GREEN HYD. SYSTEM (DEPRESSURIZED)

GAS REPLENISHMENT OF THE NLG SHOCK ABSORBER

G7508471 - G3NT1T0 - FM32Y2BASEMCE03

GAS REPLENISHMENT OF THE NLG SHOCK ABSORBER

...

Job set-up

...

Make sure that:

✓ - Green system is depressurized.

✓ - Deactivate nosewheel steering.

- Open NLG doors. Fit safety devices.

...

Procedure

...

Gas replenishment of the NLG shock absorber

...

Close-up

...

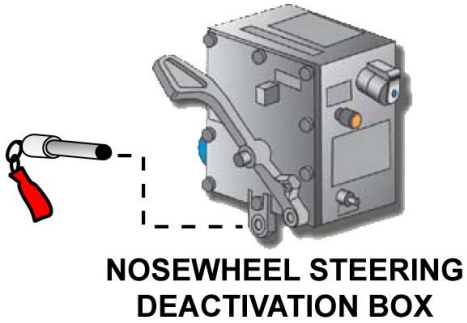

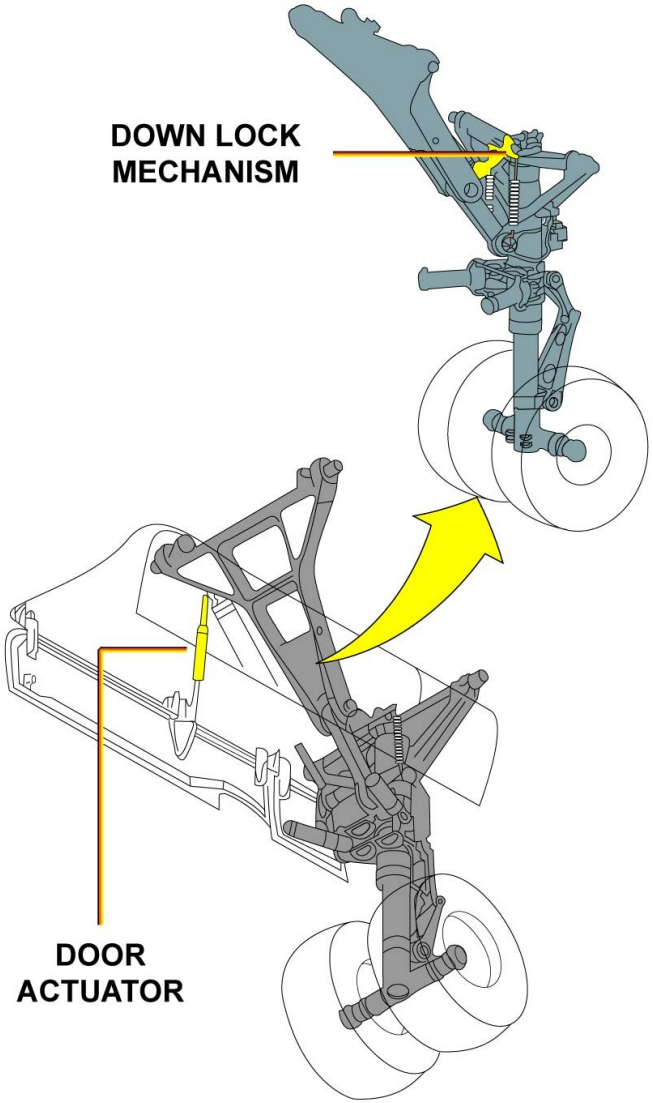

GAS REPLENISHMENT OF THE NLG SHOCK ABSORBER

GAS REPLENISHMENT OF THE NLG SHOCK ABSORBER

...

✓ Job set-up

...

✓ Make sure that:

...

⇨ Procedure

...

⇨ Gas replenishment of the NLG shock absorber

⇨ - Compare top and bottom chamber pressures.

- Measure and write down the dimension H.

- Measure the ambient temperature T1.

- Adjust the nitrogen pressure to the correct pressure using the graphic.

...

...

PBOTTOM - PTOP > 6.9 bars (100 PSI)

THE FLOATING PISTON IS AGAINST THE STOPS

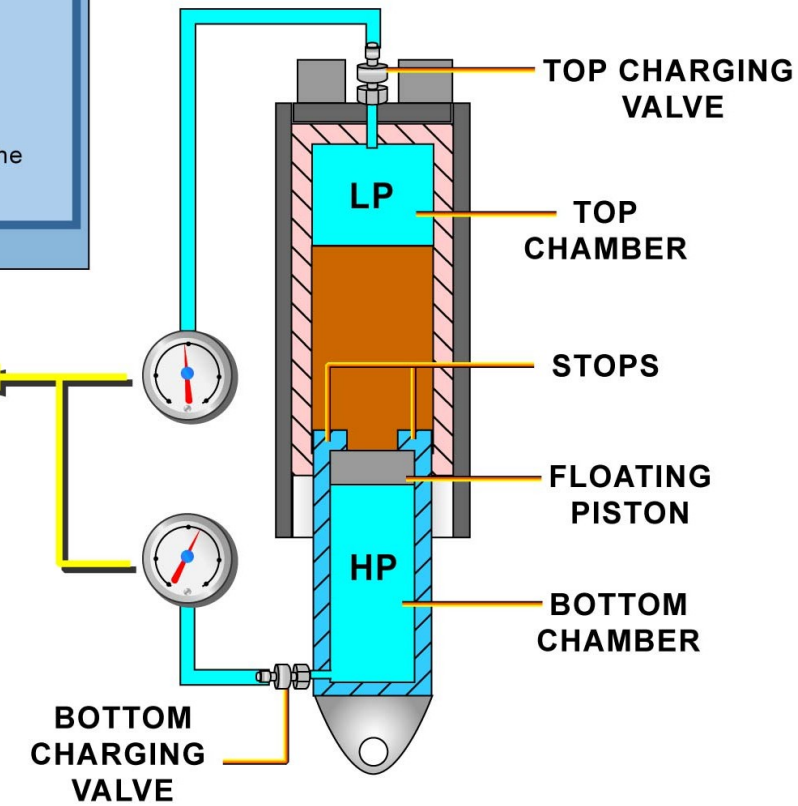

GAS REPLENISHMENT OF THE NLG SHOCK ABSORBER

GAS REPLENISHMENT OF THE NLG SHOCK ABSORBER

...

✓ **Job set-up**

...

✓ **Make sure that:**

...

⇨ **Procedure**

...

⇨ **Gas replenishment of the NLG shock absorber**

- ✓ - Compare top and bottom chamber pressures.
- ✓ - Measure and write down the dimension H.
- ✓ - Measure the ambient temperature T1.
- ⇨ - Adjust the nitrogen pressure to the correct pressure using the graphic.

...

...

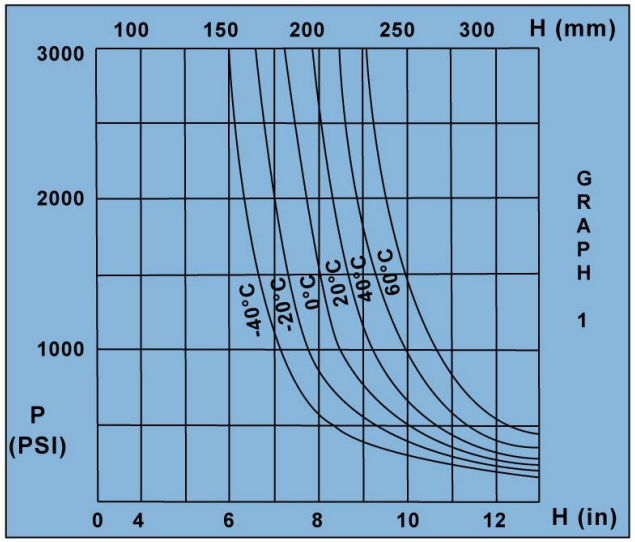

Adjust top chamber pressure (P1) until H agrees ±1 mm with H shown on the graphic

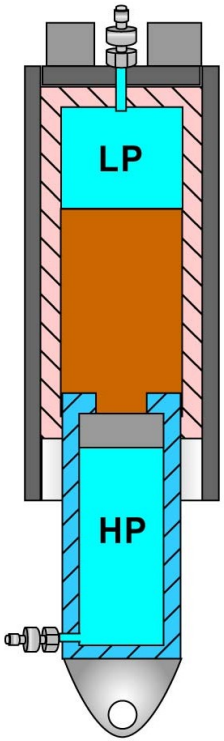

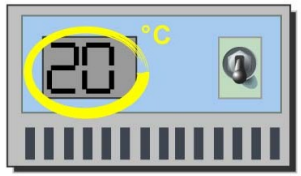

Ambient Temperature T1

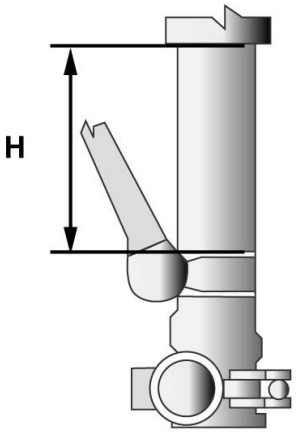

GAS REPLENISHMENT OF THE NLG SHOCK ABSORBER

GAS REPLENISHMENT OF THE NLG SHOCK ABSORBER

...

✓ Job set-up

...

✓ Make sure that:

...

⇨ Procedure

...

⇨ **Gas replenishment of the NLG shock absorber**

✓ - Make sure that P2 > P1 + 6.9 bars.

⇨ - Adjust P1 measured with P1 nominal shown on the graphic 2.

- Adjust the nitrogen pressure to the correct pressure using the graphic 1 as seen before.

...

...

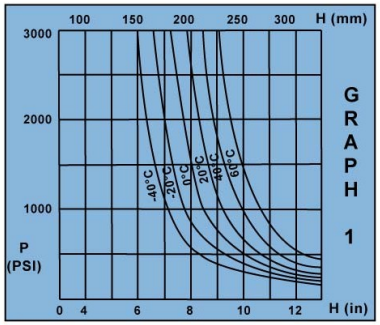

Adjust top chamber pressure (P1) until H agrees ±1 mm with H shown on the graphic 1

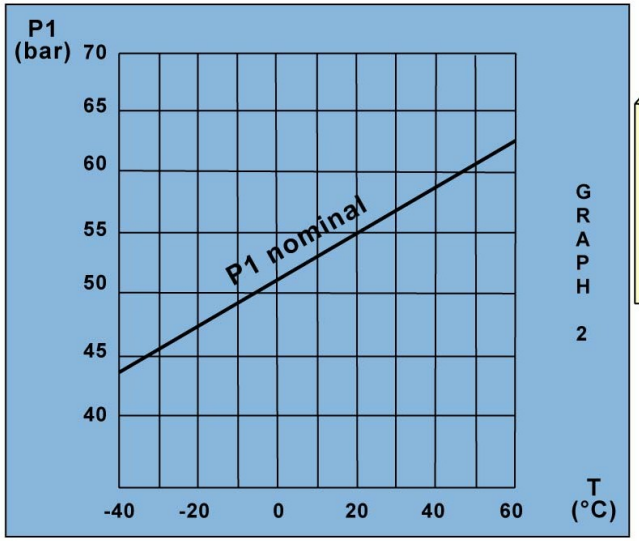

$\Delta P = P1 - P1$ nominal

ADJUST IF $\Delta P \neq 0$

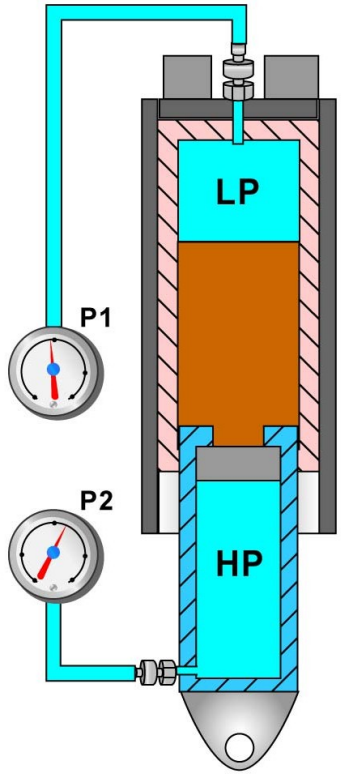

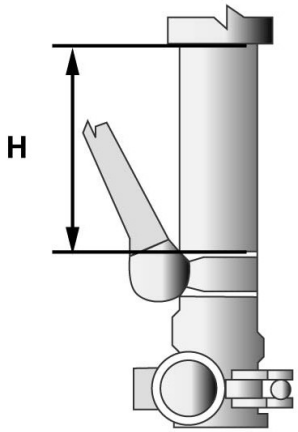

GAS REPLENISHMENT OF THE NLG SHOCK ABSORBER

GAS REPLENISHMENT OF THE NLG SHOCK ABSORBER

...

✓ **Job set-up**

...

✓ **Make sure that:**

...

✓ **Procedure**

...

✓ **Gas replenishment of the NLG shock absorber**

...

✓ - Check the pressure in both chambers.

✓ - Pressurize green system, check if wheels are in central position.

...

✓ **Close-up**

...

✓ - Remove safety devices and close the doors.

REPEAT ALL THE PROCEDURE IF:

$P_{bottom} - P_{top} < 6.9$ bars (100 PSI)

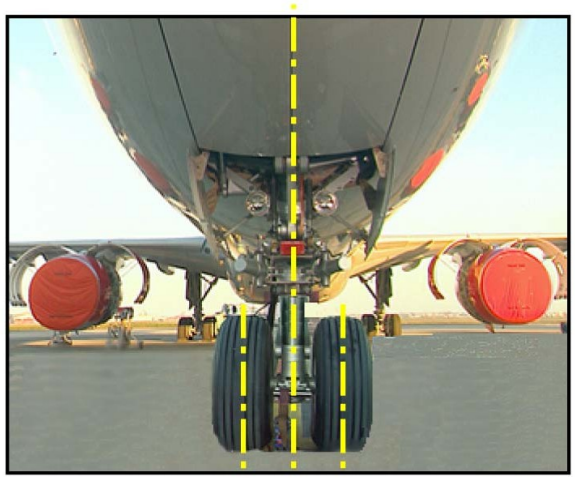

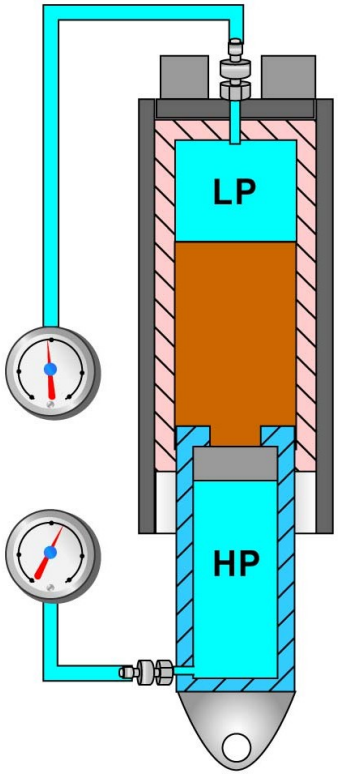

✓ TASK COMPLETED

GAS REPLENISHMENT OF THE NLG SHOCK ABSORBER

This Page Intentionally Left Blank

G7508471 - G3NT1T0 - FM32Y2BASEMCE03

LANDING GEAR SYSTEM BASE MAINTENANCE (3)

HYDRAULIC REPLENISHMENT OF THE MLG SHOCK ABSORBER

Place a warning notice in the cockpit to prevent L/G operation and at the access panel to prevent MLG ground door opening.
Make sure the green hydraulic system is depressurized.
Put the MLG safety devices. Make sure that the applicable MLG door is closed.
Open the bleed screw. Install a bleed tube to the 3-way valve connected to the bleed/inflation valve. The free-end of the tube should be at least 400 mm below the valve.
Check the pressure control valve is closed, and open the bleed/inflation valve. Wait for 2 hours, to make sure that there is a complete nitrogen/fluid separation, and close the bleed screw.
Connect the hydraulic source to the filling valve via a shut-off valve.
Connect the secondary bleed valve to the container and open it. Pump the fluid from the hydraulic source up to a pressure of 1.7 bars (25 PSI).
Let the fluid bleed through the secondary valve until 5 liters of air-free fluid has flown down. Close the secondary bleed valve.
When the fluid from the bleed/inflation valve is free from air, close the filling valve and the shut-off valve. 10 minutes later, close the bleed/inflation valve.
Remove the bleed tubes, the container and the hydraulic supply line.
After fluid replenishment, the shock absorber must be serviced with nitrogen.
Remove the warning notices and safety devices.

HYDRAULIC REPLENISHMENT OF THE MLG SHOCK ABSORBER

...

Job set-up

...

Make sure that:

- ✓ - Warning notices are in position.
- ✓ - Green system is depressurized.
- ➡ - Safety devices are installed on MLG.
- - MLG doors are closed.

...

Procedure

...

Hydraulic replenishment of the MLG shock absorber

...

Close-up

...

CAUTION: YOU MUST CLOSE THE MLG DOORS BEFORE YOU DEFLATE THE MLG SHOCK ABSORBER. IF THE DOORS STAY OPEN, THEY WILL HIT THE GROUND AND DAMAGE WILL OCCUR.

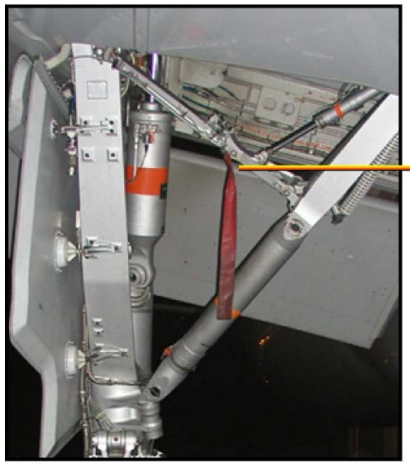

SAFETY DEVICE

L/G LEVER (312VU)

MLG GROUND DOOR OPENING HANDLE

GREEN HYD. SYSTEM (DEPRESSURIZED)

HYDRAULIC REPLENISHMENT OF THE MLG SHOCK ABSORBER

HYDRAULIC REPLENISHMENT OF THE MLG SHOCK ABSORBER

...

✓ **Job set-up**

...

✓ **Make sure that:**

...

⇨ **Procedure**

...

⇨ **Hydraulic replenishment of the MLG shock absorber**

✓ - Open bleed screw. Install the 3-way valve, the bleed tube and the container.

⇨ - Check the pressure control valve is closed.
Open bleed/inflation valve. wait 2 hours. Close the bleed screw.

- Connect hydraulic source. Connect the secondary bleed valve.

- Bleed the fluid at 1.7 bars until 5 liters of free air fluid has flown.

...

...

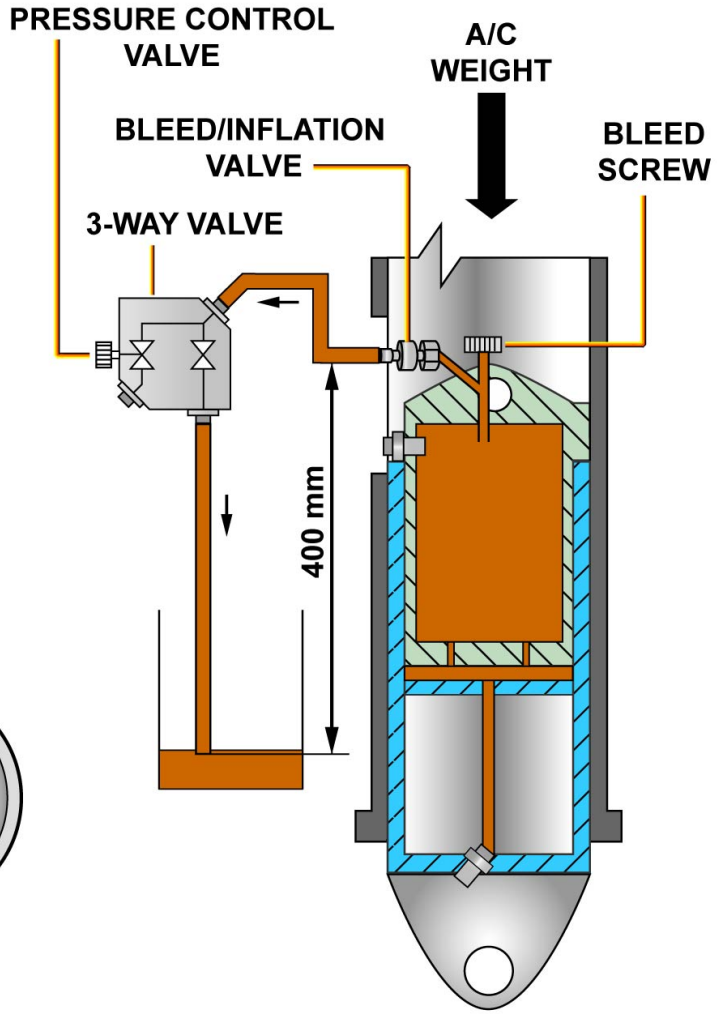

HYDRAULIC REPLENISHMENT OF THE MLG SHOCK ABSORBER

HYDRAULIC REPLENISHMENT OF THE MLG SHOCK ABSORBER

...

✓ **Job set-up**

...

✓ **Make sure that:**

...

⇨ **Procedure**

...

⇨ **Hydraulic replenishment of the MLG shock absorber**

✓ - Check the pressure control valve is closed.
Open bleed/inflation valve. wait 2 hours. Close the bleed screw.

✓ - Connect hydraulic source. Connect the secondary bleed valve.

⇨ - Bleed the fluid at 1.7 bars until 5 liters of free air fluid has flown.

- Close the valves when fluid is free from air.

...

...

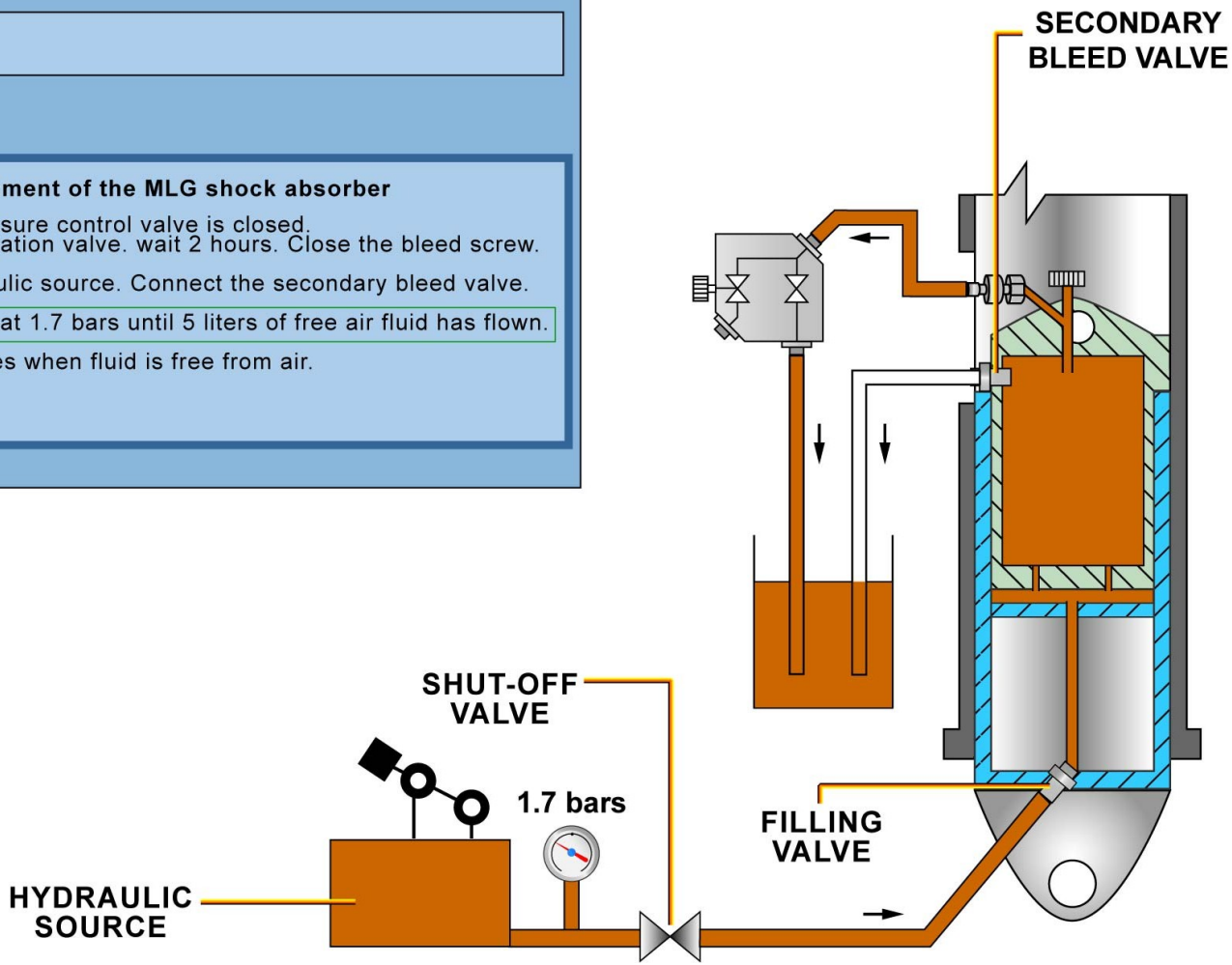

HYDRAULIC REPLENISHMENT OF THE MLG SHOCK ABSORBER

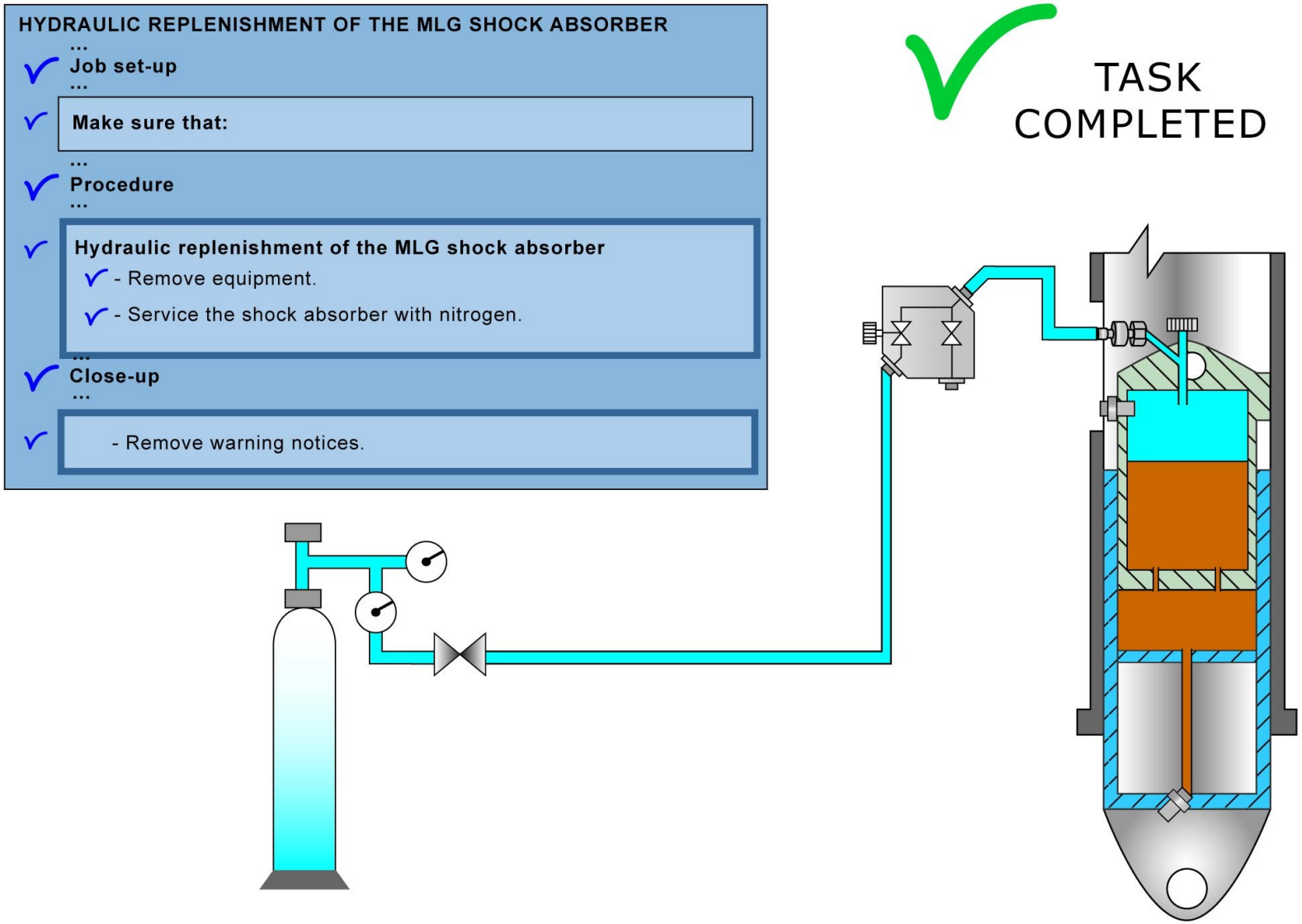

HYDRAULIC REPLENISHMENT OF THE MLG SHOCK ABSORBER

This Page Intentionally Left Blank

G7508471 - G3NT1T0 - FM32Y2BASEMCE03

LANDING GEAR SYSTEM BASE MAINTENANCE (3)

HYDRAULIC REPLENISHMENT OF THE NLG SHOCK ABSORBER (A/C ON JACKS)

Put warning notices in the cockpit to tell personnel not to operate the L/G control.
Make sure that the green hydraulic system is depressurized.
Make sure that the safety devices are installed on the NLG. Open the NLG doors and install the safety devices.

NOTE: Note: Make sure that the A/C is on jacks and that the wheels of the NLG are clear on the ground.

Open the bottom chamber charging valve to depressurize the High Pressure (HP) chamber. Open the top chamber charging valve to depressurize the LP chamber.
Close the bleed control valve and leave the top chamber charging valve open. Slowly fill the LP chamber with fluid pressurized to 15 bar maximum. Depressurize the top chamber charging valve and leave it open.
Install a filling assembly on the bottom chamber charging valve to connect the nitrogen filling hose and the nitrogen supply hose. Slowly pressurize the HP chamber with nitrogen up to the correct pressure. Close the bottom chamber charging valve, remove the filling assembly and disconnect the nitrogen filling hose. Make sure that LP chamber is full of hydraulic fluid.
Slowly operate the axle jack to push the sliding tube fully into the main fitting. Redo the procedure consisting in pressurize fluid at 15 bar maximum and let the sliding tube fully extend. Redo this procedure until there is no air remaining in the hydraulic fluid.
Operate the axle jack till H is between 189 mm and 194 mm. Connect the nitrogen filling hose to the top chamber charging valve to connect the nitrogen supply hose. Slowly pressurize the LP chamber with nitrogen and open the valve on the axle jack, in a controlled manner, to let the shock absorber fully extended. Pressurize the nitrogen to the correct pressure and make sure that H is between 408 mm and 416 mm.
Remove the access platform and make sure that the work area is clean and clear of tools and other items. Lower the aircraft off jacks. Do a pressure/extension check of the NLG shock absorber.
Remove the safety devices from the NLG doors and close the NLG FWD doors. Remove all the fixtures, tools, test and support equipment used during this procedure.

HYDRAULIC REPLENISHMENT OF THE NLG SHOCK ABSORBER

...

Job set-up

...

Make sure that:

- ✓ - Warning notices are put in the cockpit.
- ✓ - Green system is depressurized.
- ⇨ - Safety devices are installed on NLG and NLG doors.

...

Procedure

...

Hydraulic replenishment of the NLG shock absorber

...

Close-up

...

L/G LEVER (312VU)

GREEN HYD. SYSTEM (DEPRESSURIZED)

SAFETY DEVICE

HYDRAULIC REPLENISHMENT OF THE NLG SHOCK ABSORBER (A/C ON JACKS)

G7508471 - G3NT1T0 - FM32Y2BASEMCE03

HYDRAULIC REPLENISHMENT OF THE NLG SHOCK ABSORBER

...

✓ **Job set-up**

...

✓ **Make sure that:**

...

⇨ **Procedure**

...

⇨ **Hydraulic replenishment of the NLG shock absorber**

⇨ - Depressurize both chambers.

- Pressurize fluid at 15 bars maximum.
- Fill LP chamber with fluid.
- Hydraulic fluid free from air.

...

...

TOP CHAMBER CHARGING VALVE

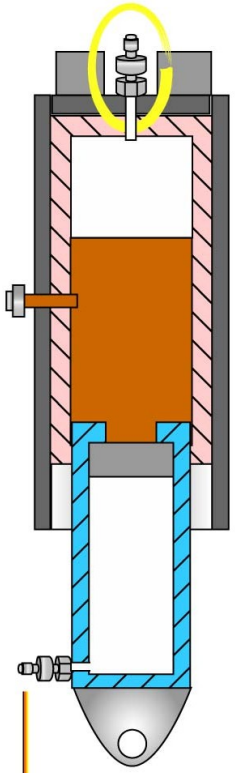

BOTTOM CHAMBER CHARGING VALVE

HYDRAULIC REPLENISHMENT OF THE NLG SHOCK ABSORBER (A/C ON JACKS)

HYDRAULIC REPLENISHMENT OF THE NLG SHOCK ABSORBER

...

✓ **Job set-up**

...

✓ **Make sure that:**

...

⇨ **Procedure**

...

⇨ **Hydraulic replenishment of the NLG shock absorber**

✓ - Depressurize both chambers.

✓ - Pressurize fluid at 15 bars maximum.

✓ - Fill LP chamber with fluid.

⇨ - Hydraulic fluid free from air.

...

...

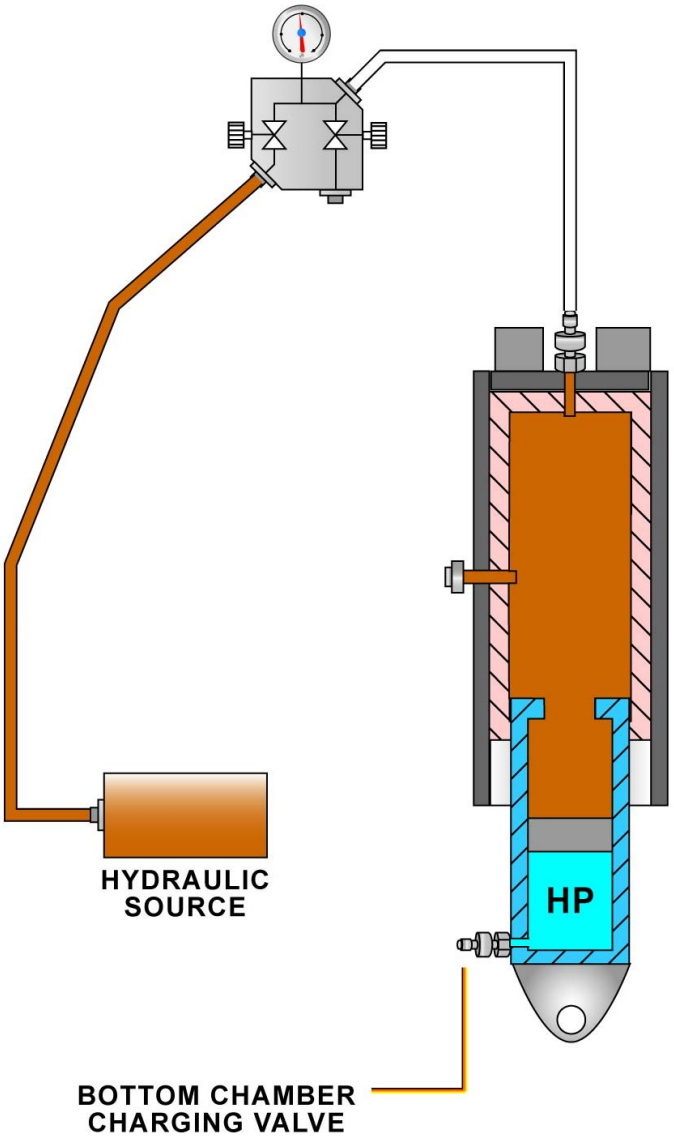

HYDRAULIC REPLENISHMENT OF THE NLG SHOCK ABSORBER (A/C ON JACKS)

HYDRAULIC REPLENISHMENT OF THE NLG SHOCK ABSORBER

...

✓ **Job set-up**

...

✓ **Make sure that:**

...

⇨ **Procedure**

...

⇨ **Hydraulic replenishment of the NLG shock absorber**

✓ - ...

⇨ - Pressurize LP chamber with nitrogen.

- Pressure / extension check.

- ...

...

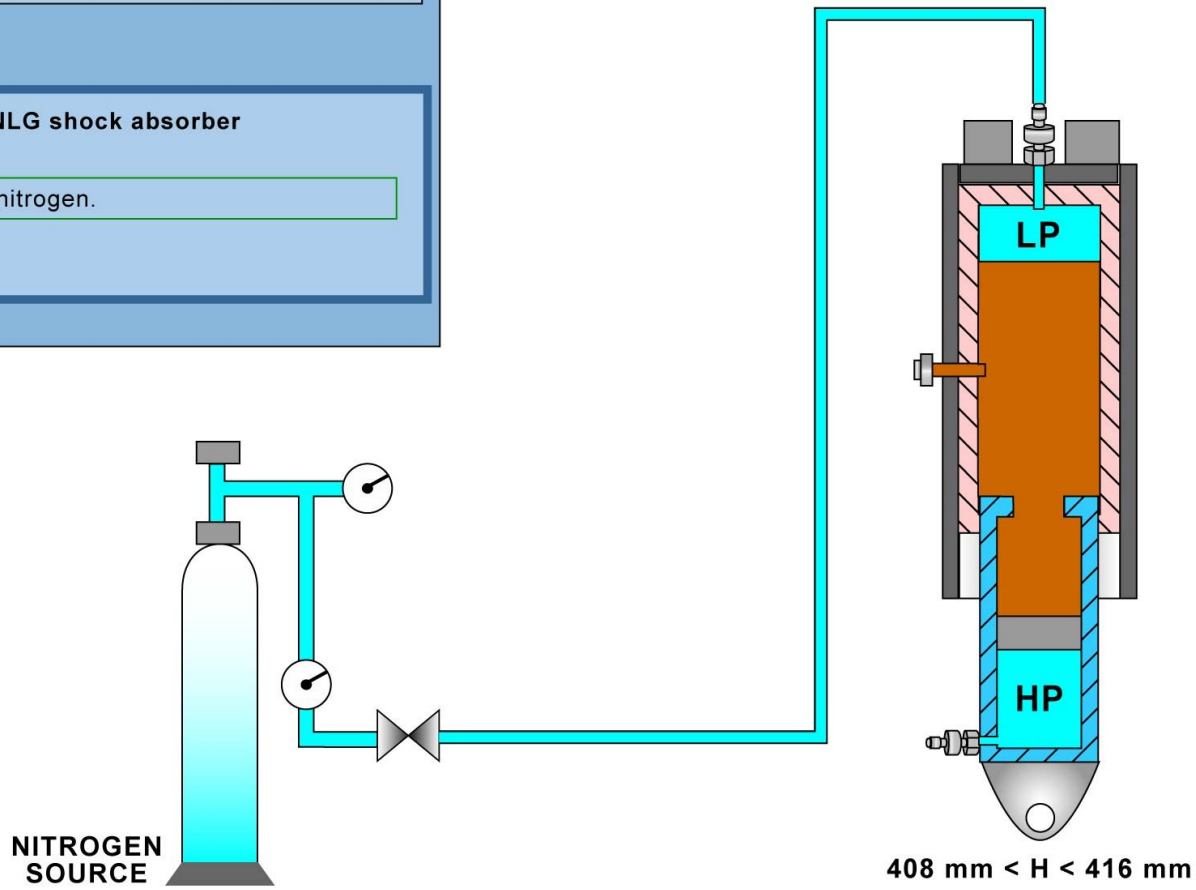

HYDRAULIC REPLENISHMENT OF THE NLG SHOCK ABSORBER (A/C ON JACKS)

HYDRAULIC REPLENISHMENT OF THE NLG SHOCK ABSORBER

...

✓ Job set-up

...

✓ Make sure that:

...

✓ Procedure

...

✓ Hydraulic replenishment of the NLG shock absorber

...

✓ Close-up

...

✓ - Remove warning notices and safety devices.

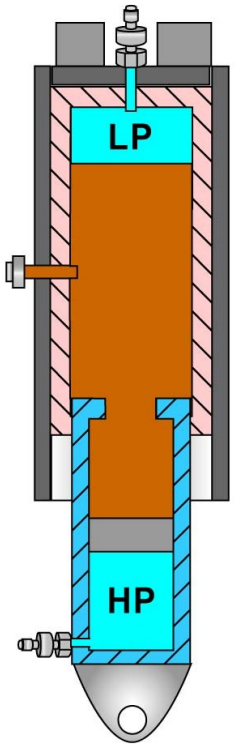

✓ TASK COMPLETED

HYDRAULIC REPLENISHMENT OF THE NLG SHOCK ABSORBER (A/C ON JACKS)

AIRBUS S.A.S.
31707 BLAGNAC cedex, FRANCE
STM
REFERENCE G7508471
NOVEMBER 2008
PRINTED IN FRANCE
AIRBUS S.A.S. 2008
ALL RIGHTS RESERVED

AN EADS COMPANY

A330-200/300
TECHNICAL TRAINING MANUAL
MAINTENANCE COURSE - T1 (LVL 2&3) (RR Trent 700)
LIGHTS

This document must be used for training purposes only

Under no circumstances should this document be used as a reference

It will not be updated.

All rights reserved
No part of this manual may be reproduced in any form,
by photostat, microfilm, retrieval system, or any other means,
without the prior written permission of AIRBUS S.A.S.

AIRBUS Environmental Recommendation
Please consider your environmental responsability before printing this document.

LIGHTS

A/C Lighting System Line Maintenance Briefing (2) 2
Cabin Lighting SYS Line Maintenance Briefing (2) 60

CABIN

Cabin Lights D/O (3) 74

EXTERIOR

Exterior Lights D/O (3) 94

EMERGENCY

Emergency Lights D/O 112

MAINTENANCE PRACTICE

Lights System Base Maintenance (3) 118

A/C LIGHTING SYSTEM LINE MAINTENANCE BRIEFING (2)

GENERAL

The A/C lighting system supplies internal and external lighting. The lighting system comprises the following subsystems:
- cockpit,
- cabin,
- cargo compartments,
- service compartments,
- exterior,
- emergency,
- and maintenance / test facilities.

When you work on the A/C, you must obey all the safety procedures listed in the AMM.

G7508471 - G3NT1T0 - FM33B1000000001

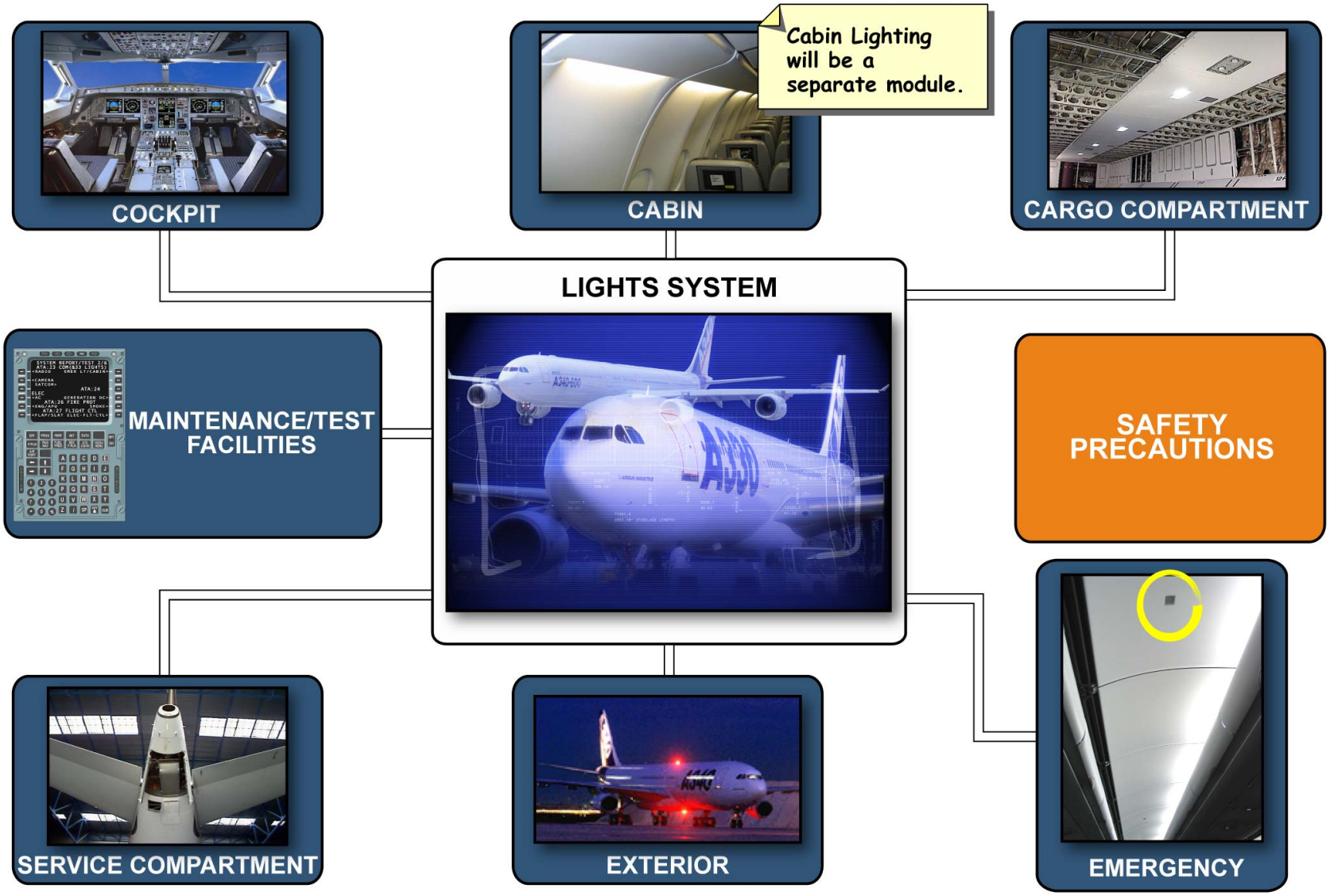

GENERAL

G7508471 - G3NT1T0 - FM33B1000000001

A/C LIGHTING SYSTEM LINE MAINTENANCE BRIEFING (2)

COCKPIT LIGHTS

The cockpit lighting system lets the flight crew see all the equipment details in the cockpit. The cockpit lighting is composed of:
- general lighting,
- instrument and panel lighting,
- annunciator light test and dimming.

G7508471 - G3NT1T0 - FM33B1000000001

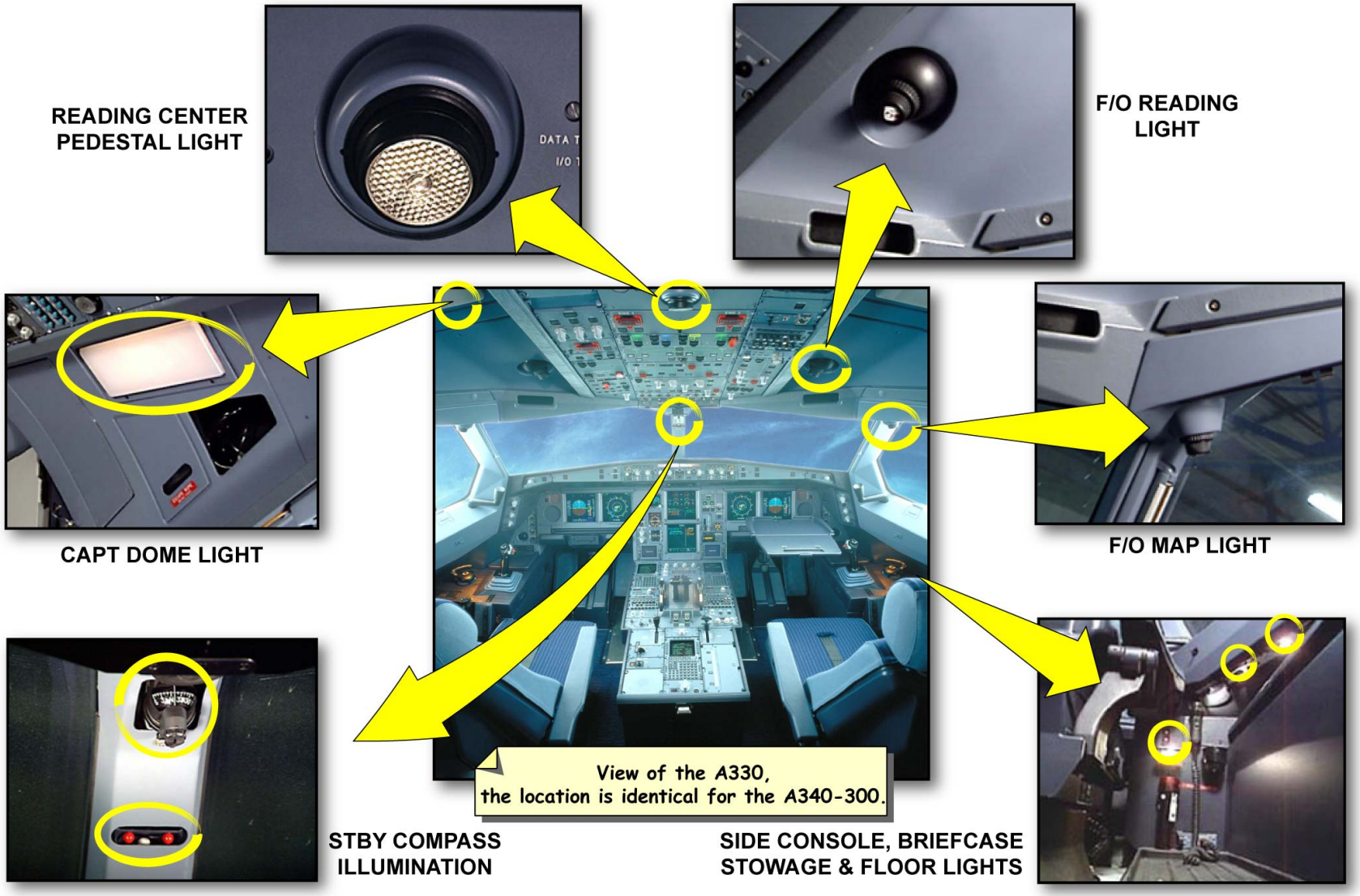

COCKPIT LIGHTS

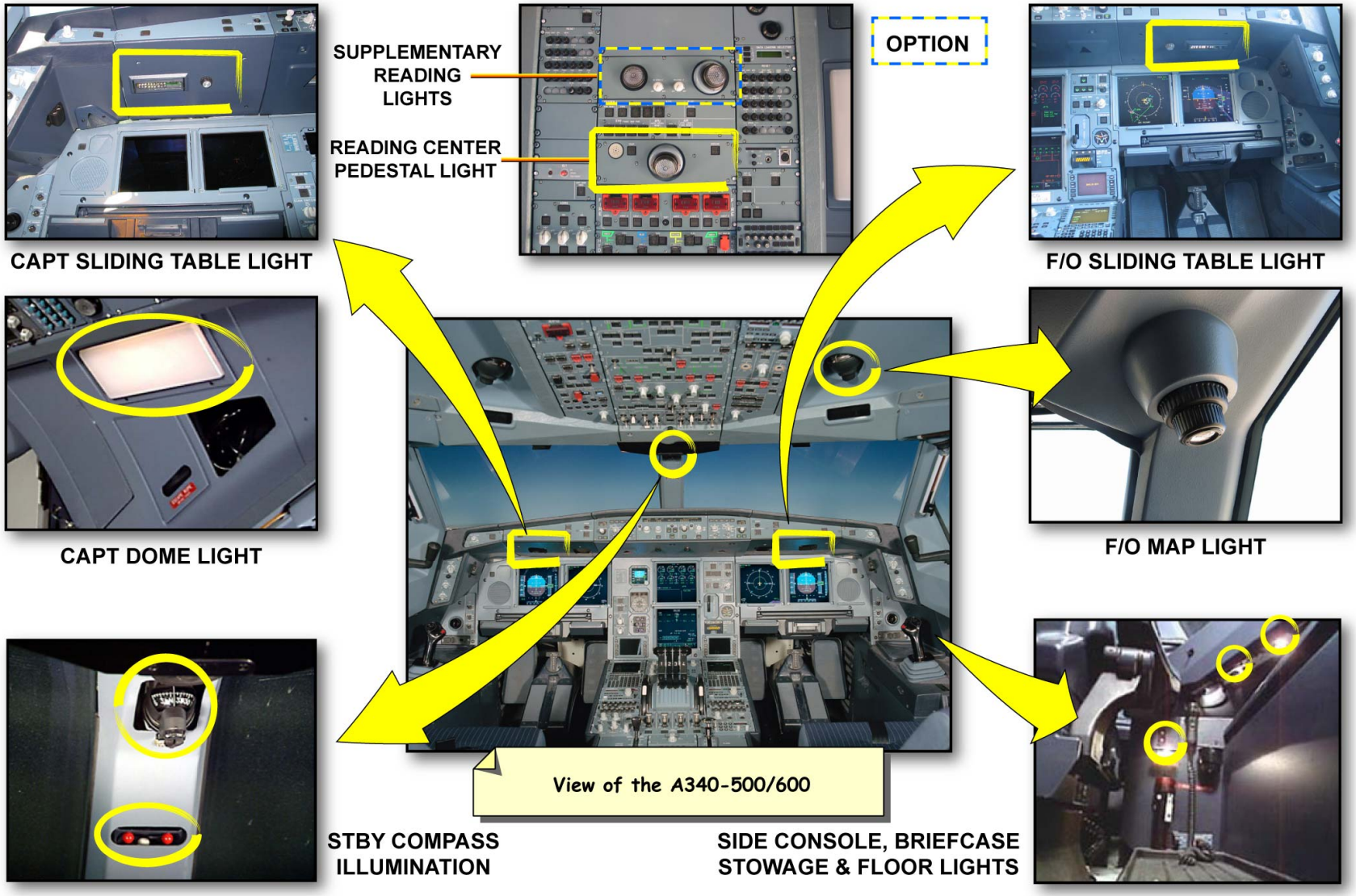

COCKPIT LIGHTS

This Page Intentionally Left Blank

G7508471 - G3NT1T0 - FM33B1000000001

A/C LIGHTING SYSTEM LINE MAINTENANCE BRIEFING (2)

COCKPIT LIGHTS (continued)

DOME LIGHTS

The control dome light switch located on the INTerior LighT panel controls the two dome lights in parallel. The dome light switch located at the cockpit entrance, on the left rear panel, also controls the two dome lights. A 3-position switch located on the INT LT panel allows the dome lights to be dimmed.

G7508471 - G3NT1T0 - FM33B1000000001

INTERIOR LIGHT PANEL

View of the A340,
The location is identical for the A330.

OVERHEAD PANEL

DOME LIGHTS SWITCH

The Right Dome light must be operative
to dispatch the aircraft - Refer to MMEL.

COCKPIT LIGHTS - DOME LIGHTS

A/C LIGHTING SYSTEM LINE MAINTENANCE BRIEFING (2)

COCKPIT LIGHTS (continued)

MAP HOLDER LIGHT AND CONSOLE/FLOOR LIGHT

The CAPT and F/O map holder lights are located under the side windows. Each of them is controlled by a MAP toggle switch. A CONSOLE/floor three-position switch is located on each side of the main panel. Each switch controls the lighting of the side console, briefcase and floor.

G7508471 - G3NT1T0 - FM33B1000000001

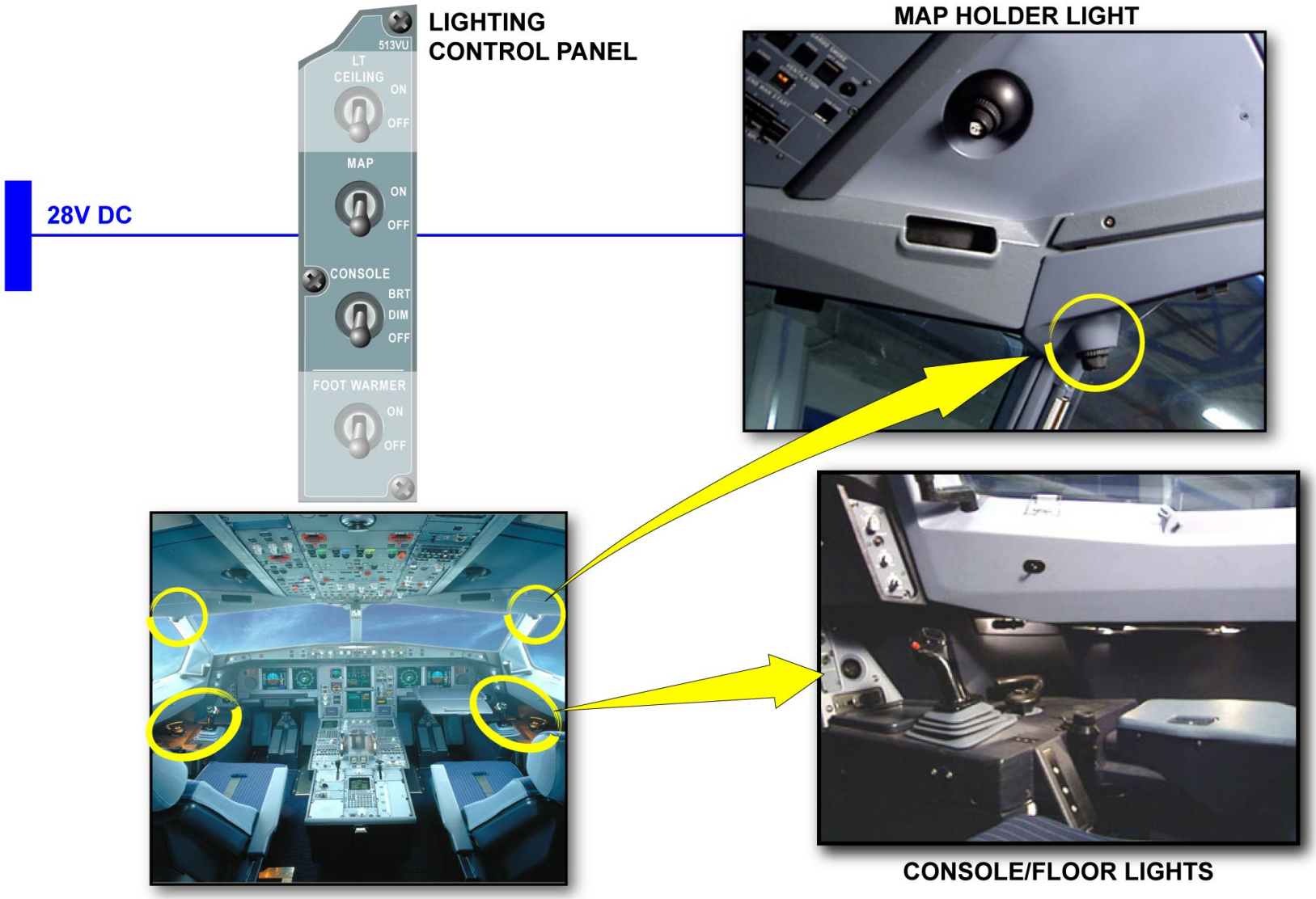

COCKPIT LIGHTS - MAP HOLDER LIGHT AND CONSOLE/FLOOR LIGHT

A/C LIGHTING SYSTEM LINE MAINTENANCE BRIEFING (2)

COCKPIT LIGHTS (continued)

FLOOD LIGHTING

Lighting of right lateral, left lateral and center instrument panel zones is done by halogen lamps controlled by the single control dual rheostat located on the center pedestal. In storm conditions, with the INTerior DOME LighT switch in the STORM position, the two lateral and center instrument panels zones have lighting on full brightness whatever the position of the rheostat.

G7508471 - G3NT1T0 - FM33B1000000001

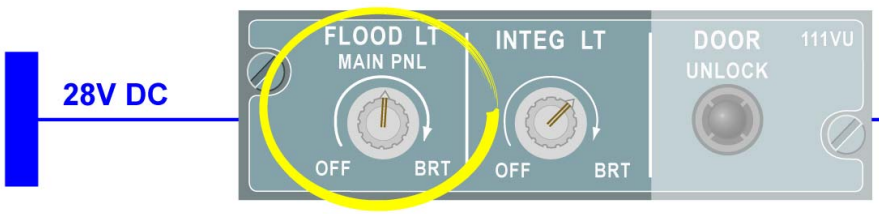

FLOOD LIGHT PANEL (PEDESTAL)

INTERIOR LIGHT PANEL (OVERHEAD PANEL)

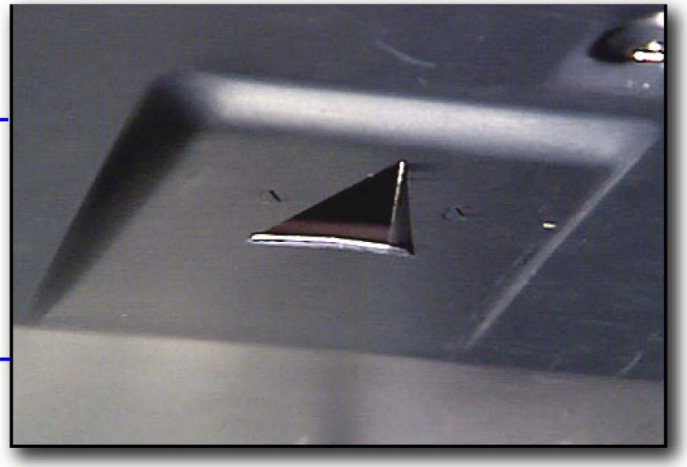

MAIN INSTRUMENT PANELS LIGHTING

COCKPIT LIGHTS - FLOOD LIGHTING

G7508471 - G3NT1T0 - FM33B1000000001

A/C LIGHTING SYSTEM LINE MAINTENANCE BRIEFING (2)

COCKPIT LIGHTS (continued)

STANDBY COMPASS

A STandBY COMPASS switch located on the INT LT panel controls the lighting of the standby compass and the seat alignment indicator.

G7508471 - G3NT1T0 - FM33B1000000001

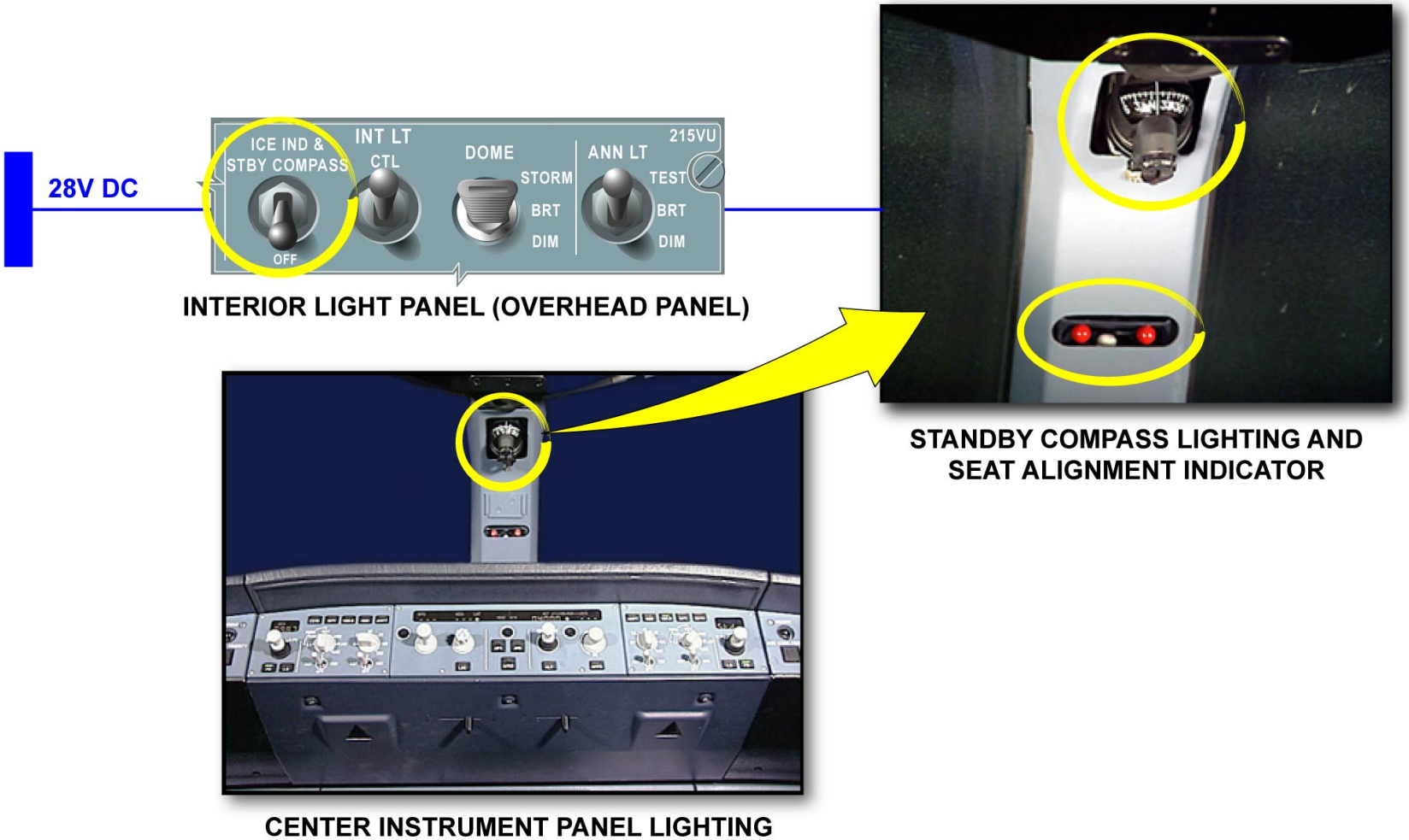

COCKPIT LIGHTS - STANDBY COMPASS

A/C LIGHTING SYSTEM LINE MAINTENANCE BRIEFING (2)

COCKPIT LIGHTS (continued)

OVERHEAD LIGHTS

A swivel reading light brings lighting to each CAPT and F/O sliding table and console zone. Each reading light has an internal double rotating diaphragm giving the OFF/ON/and DIM function and beam control. The CAPT and F/O sides have a supplementary reading light controlled by a rheostat adjacent to the light. The center pedestal is illuminated by the center pedestal light located on the overhead panel and is controlled by a rheostat located on the center pedestal.

G7508471 - G3NT1T0 - FM33B1000000001

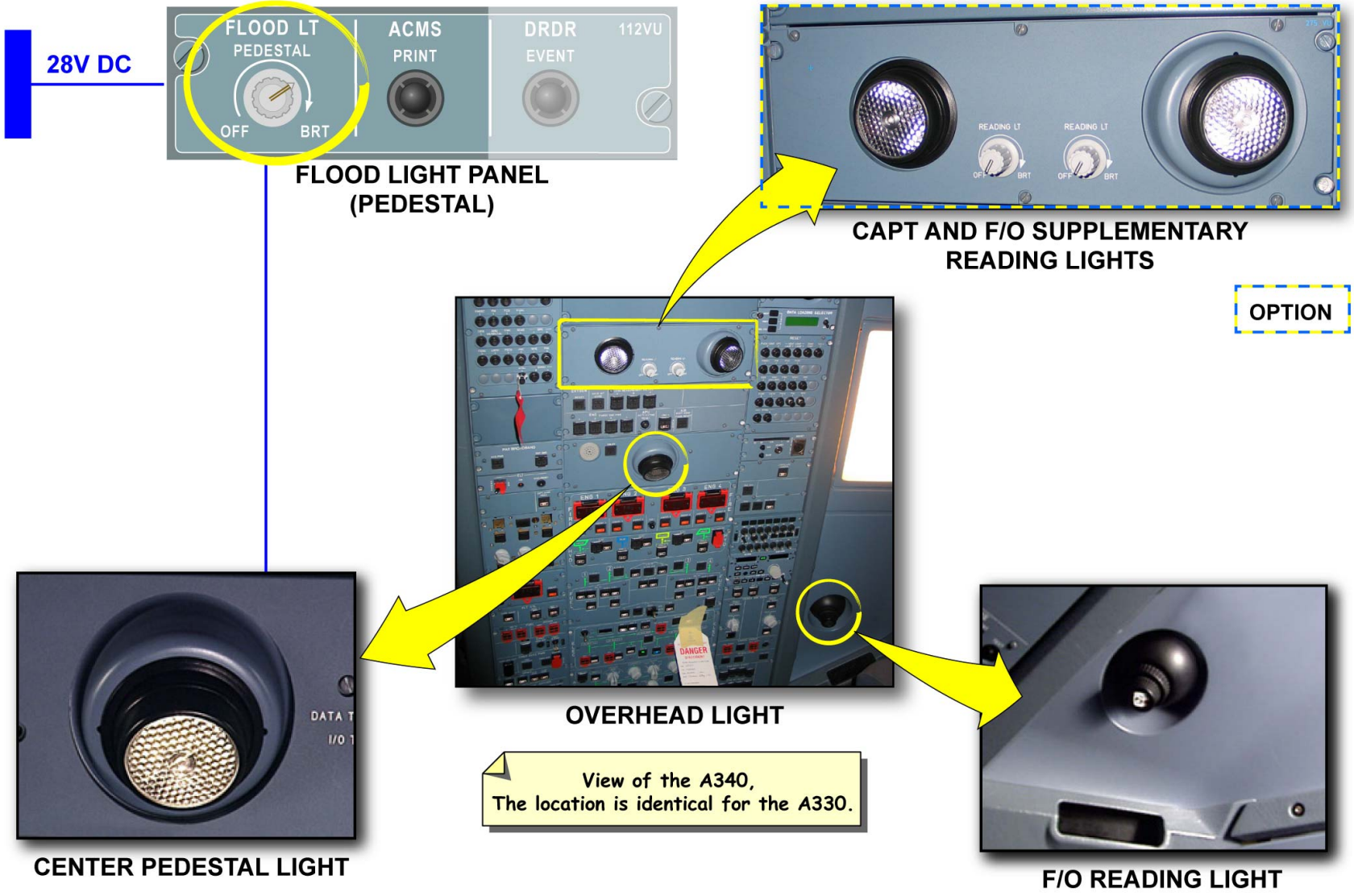

COCKPIT LIGHTS - OVERHEAD LIGHTS

A/C LIGHTING SYSTEM LINE MAINTENANCE BRIEFING (2)

COCKPIT LIGHTS (continued)

COAT STOWAGE COMPARTMENT

The coat stowage compartment has 3 lamps controlled by a toggle switch. The cockpit also has 28V DC and 115V AC outlets located on the aft wall panel.

G7508471 - G3NT1T0 - FM33B1000000001

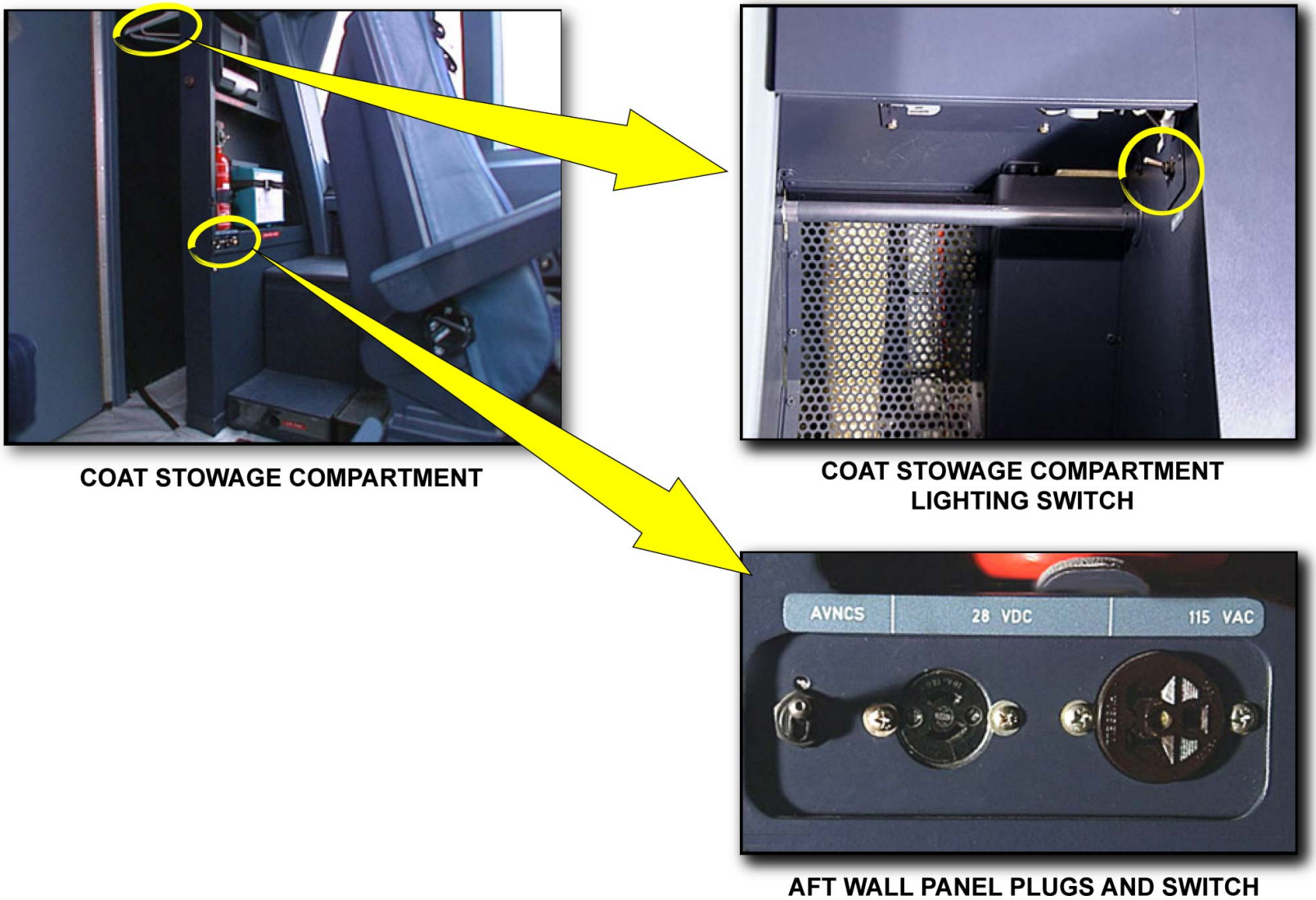

COAT STOWAGE COMPARTMENT

COAT STOWAGE COMPARTMENT
LIGHTING SWITCH

AFT WALL PANEL PLUGS AND SWITCH

COCKPIT LIGHTS - COAT STOWAGE COMPARTMENT

G7508471 - G3NT1T0 - FM33B1000000001

A/C LIGHTING SYSTEM LINE MAINTENANCE BRIEFING (2)

COCKPIT LIGHTS (continued)

ANNUNCIATOR LIGHT TEST AND DIMMING

The instruments and panels integrated lighting has a variable brightness to allow the crew to read the indications during night flights or flights in stormy conditions. The adjustment of the integral lighting brightness of the overhead panel, CAPT and F/O main instrument panels and side consoles, is controlled by the INTEGral LighT potentiometer located on the center pedestal via a lighting controller. The adjustment of the integral lighting brightness of the glareshield and Flight Control Unit (FCU) is controlled by rotary potentiometers located underneath the glareshield. They are part of the flood light unit. One potentiometer controls directly a 0.6V DC to 25V DC elaborated from the aircraft 28V DC to adjust the glareshield and the FCU front face lighting. The other potentiometer is used to control the adjustment of the FCU display via a lighting controller.

G7508471 - G3NT1T0 - FM33B1000000001

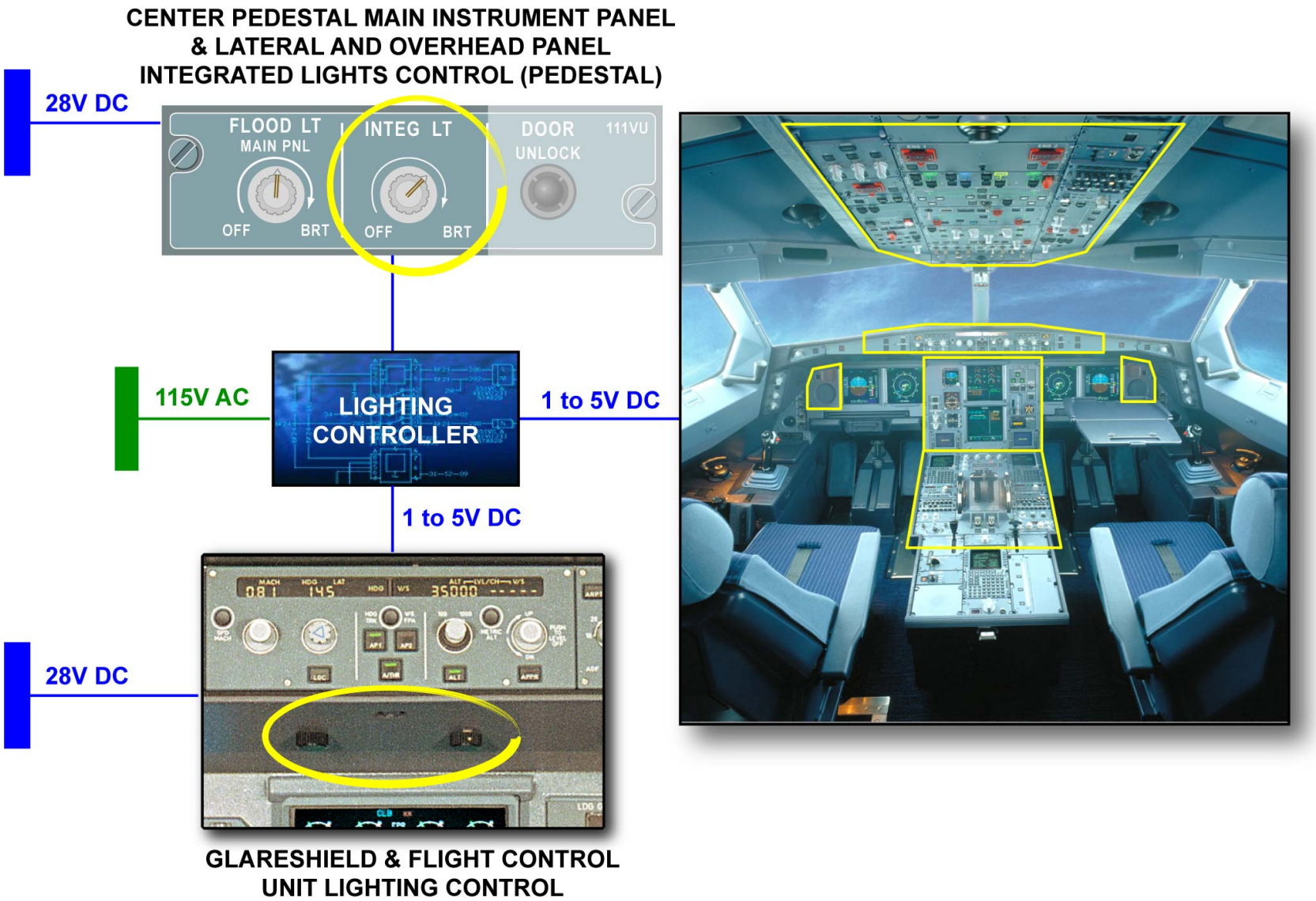

COCKPIT LIGHTS - ANNUNCIATOR LIGHT TEST AND DIMMING

A/C LIGHTING SYSTEM LINE MAINTENANCE BRIEFING (2)

COCKPIT LIGHTS (continued)

ANNUNCIATOR LIGHT TEST

The dimming of all annunciators and P/BSWs located on the overhead panel, glareshield and pedestal, is possible using the "TEST-BRIGHT-DIM" control switch installed on the overhead panel. The ANNunciator LT TEST function allows all lights to be checked. Four identical transformers provide a 3 to 5V AC to the lamps depending on the TEST-BRIGHT-DIM switch position. The ground circuit for the lamps is controlled by relays located in the annunciators light control unit.

G7508471 - G3NT1T0 - FM33B1000000001

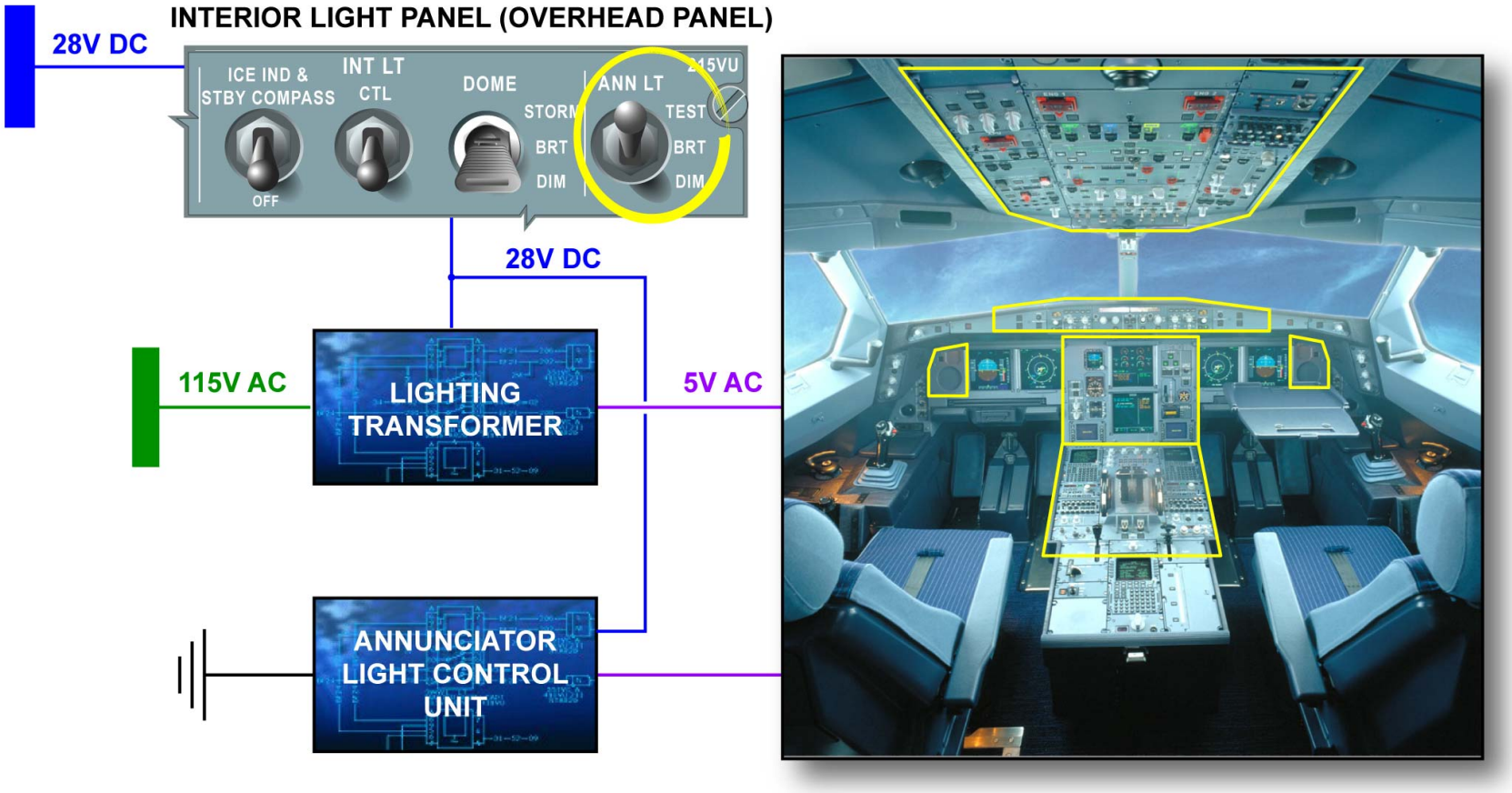

COCKPIT LIGHTS - ANNUNCIATOR LIGHT TEST

A/C LIGHTING SYSTEM LINE MAINTENANCE BRIEFING (2)

CARGO COMPARTMENT

FWD, AFT and bulk cargo compartment fluorescent tubes are separately controlled by a toggle switch located inside each cargo compartment near the door on the RH side. A 115V AC outlet is also available on each CARGO COMPARTMENT PANEL.

G7508471 - G3NT1T0 - FM33B1000000001

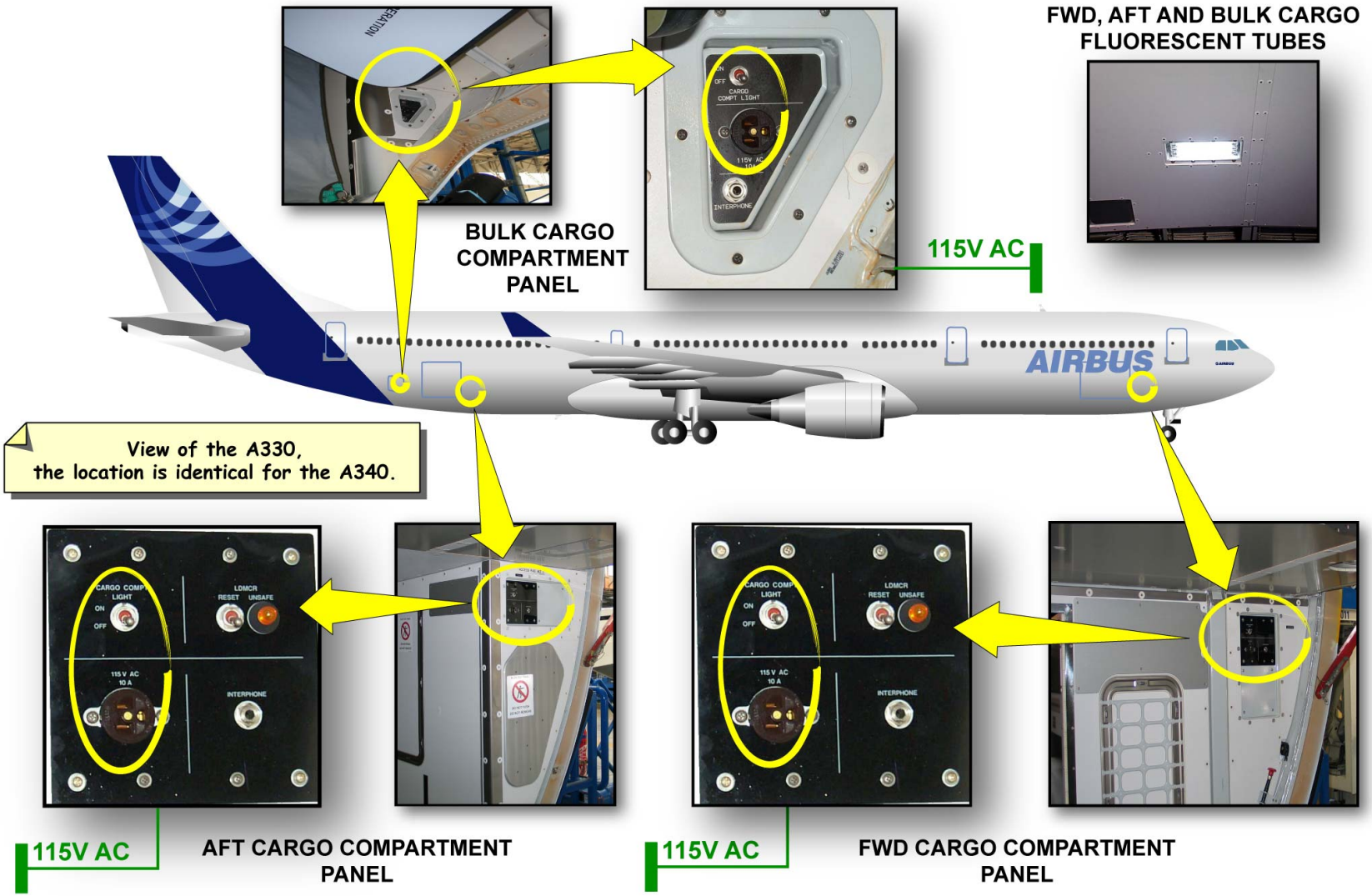

CARGO COMPARTMENT

A/C LIGHTING SYSTEM LINE MAINTENANCE BRIEFING (2)

CARGO COMPARTMENT (continued)

OPERATION PANEL

The loading areas of the FWD and AFT cargo compartments have lighted areas. These areas are controlled by a toggle switch located outside the cargo compartments on the RH side in the DOOR OPERATION PANEL.

G7508471 - G3NT1T0 - FM33B1000000001

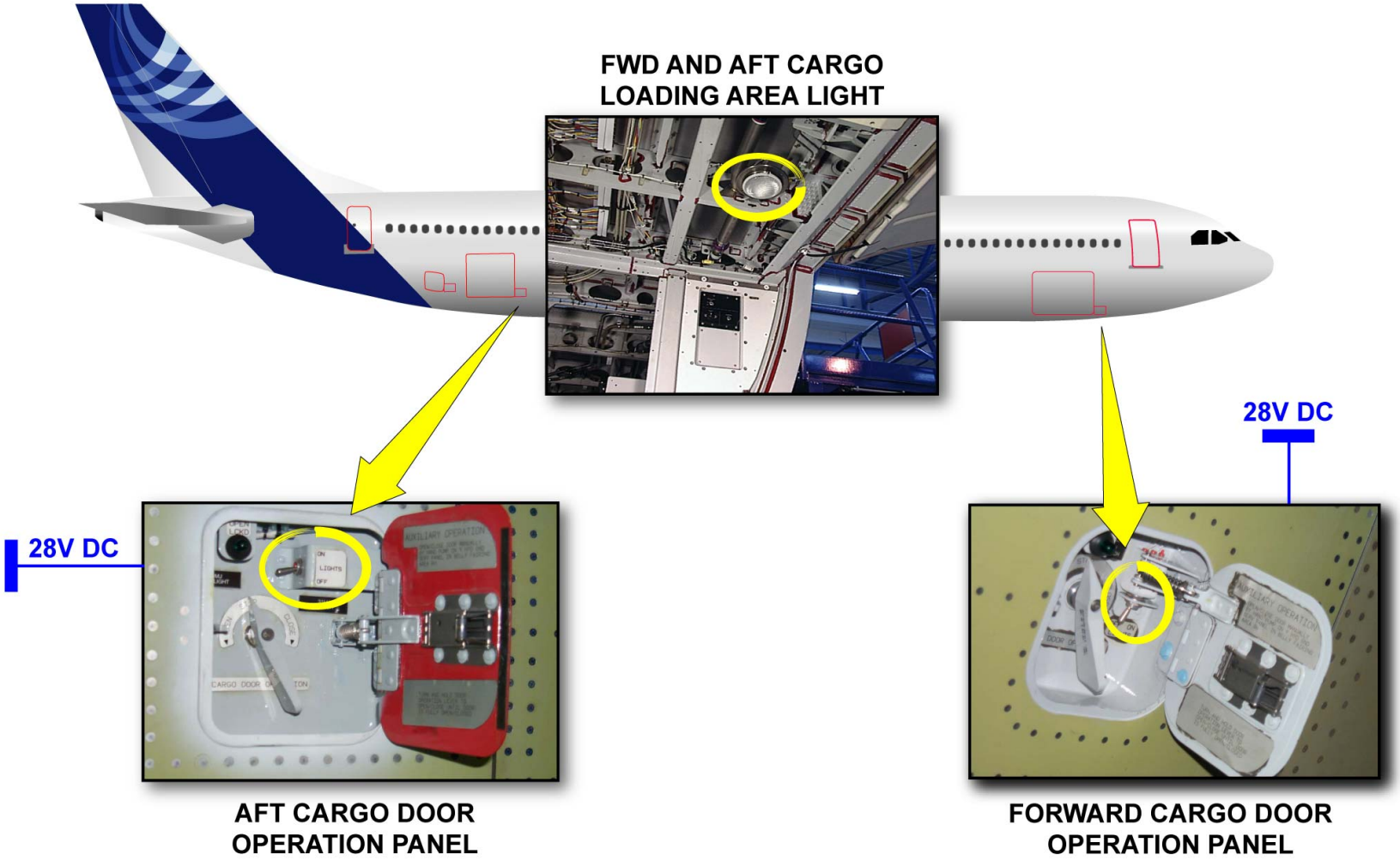

CARGO COMPARTMENT - OPERATION PANEL

A/C LIGHTING SYSTEM LINE MAINTENANCE BRIEFING (2)

SERVICE COMPARTMENTS LIGHTING

SERVICE AREA AND APU COMPARTMENTS

The APU compartment has a light, controlled by a switch. The SERVICE compartment has a light, controlled by a switch located near the door. Both compartments have 28V DC outlets.

G7508471 - G3NT1T0 - FM33B1000000001

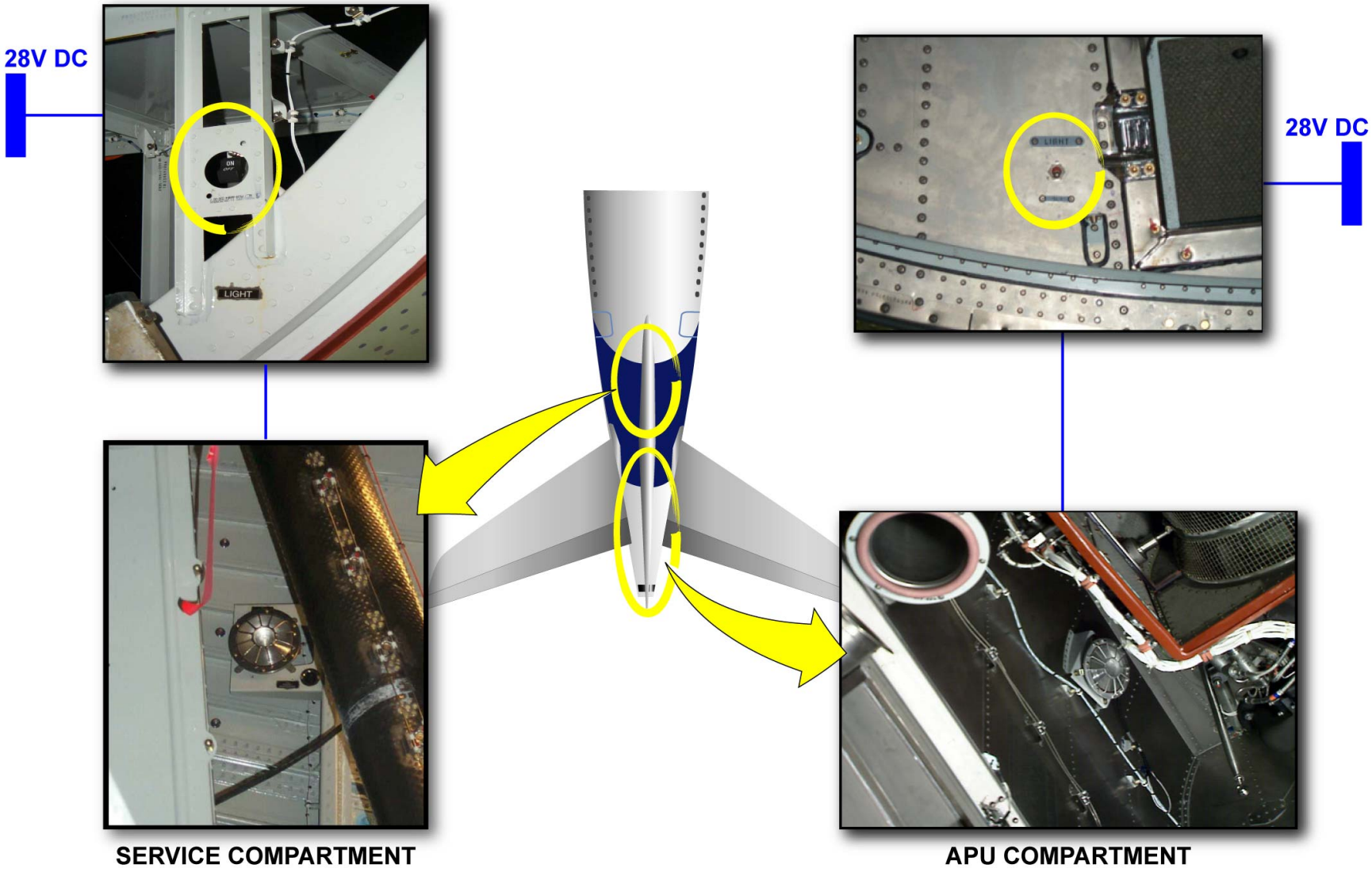

SERVICE COMPARTMENTS LIGHTING - SERVICE AREA AND APU COMPARTMENTS

A/C LIGHTING SYSTEM LINE MAINTENANCE BRIEFING (2)

SERVICE COMPARTMENTS LIGHTING (continued)

AIR CONDITIONING COMPARTMENT LIGHTING

The air conditioning duct and accessory compartment has a light, controlled by a switch located on the High Pressure (HP) ground air connector panel. A 28V DC outlet is also installed on this panel.

G7508471 - G3NT1T0 - FM33B1000000001

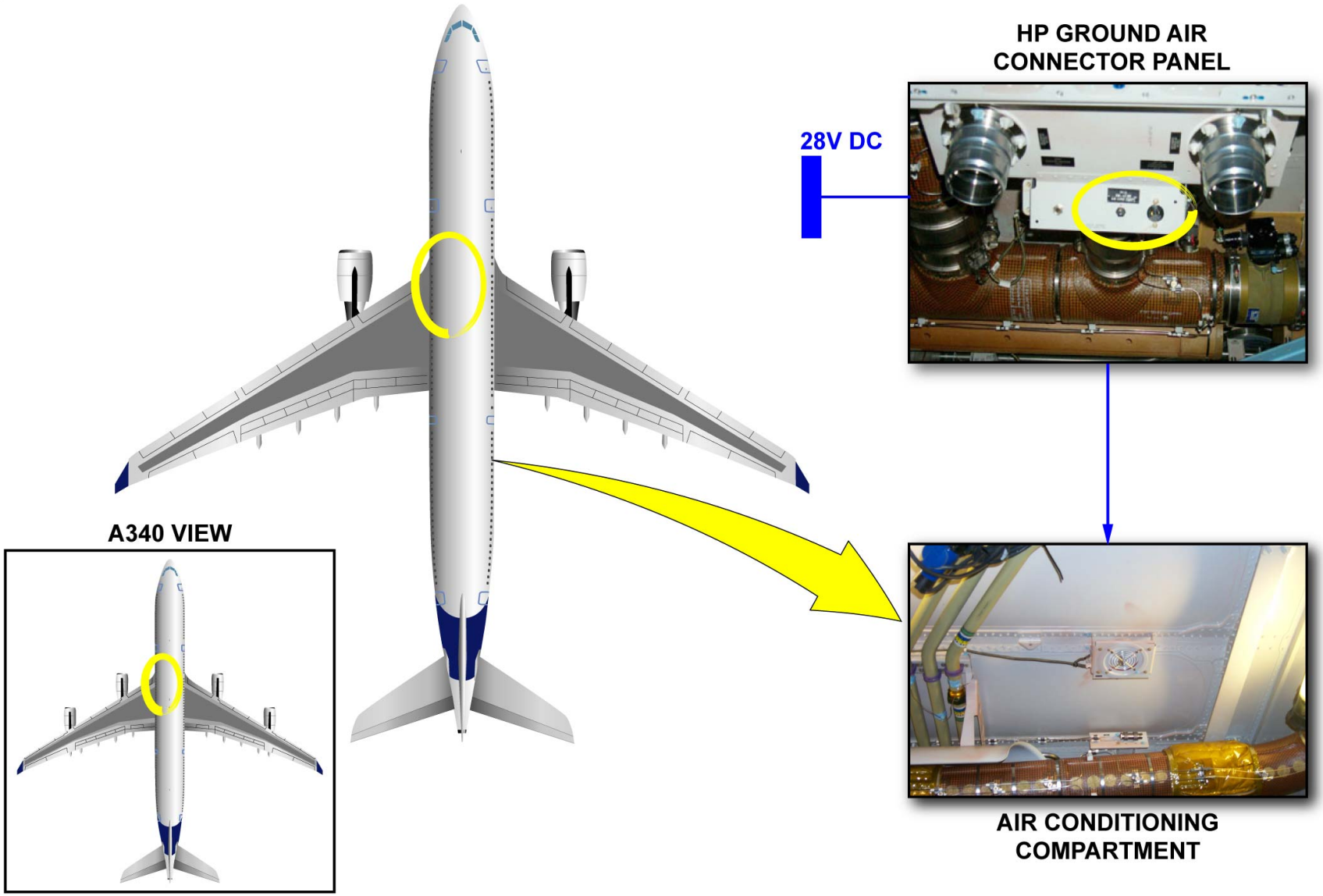

SERVICE COMPARTMENTS LIGHTING - AIR CONDITIONING COMPARTMENT LIGHTING

A/C LIGHTING SYSTEM LINE MAINTENANCE BRIEFING (2)

SERVICE COMPARTMENTS LIGHTING (continued)

AVIONICS COMPARTMENT LIGHTING

Seven dome lights are installed in the avionics compartment. A switch located on the aft wall panel in the cockpit simultaneously controls these dome lights. A second one is installed in the avionics compartment itself. 115V AC and 28V DC electrical outlets are also available.

G7508471 - G3NT1T0 - FM33B1000000001

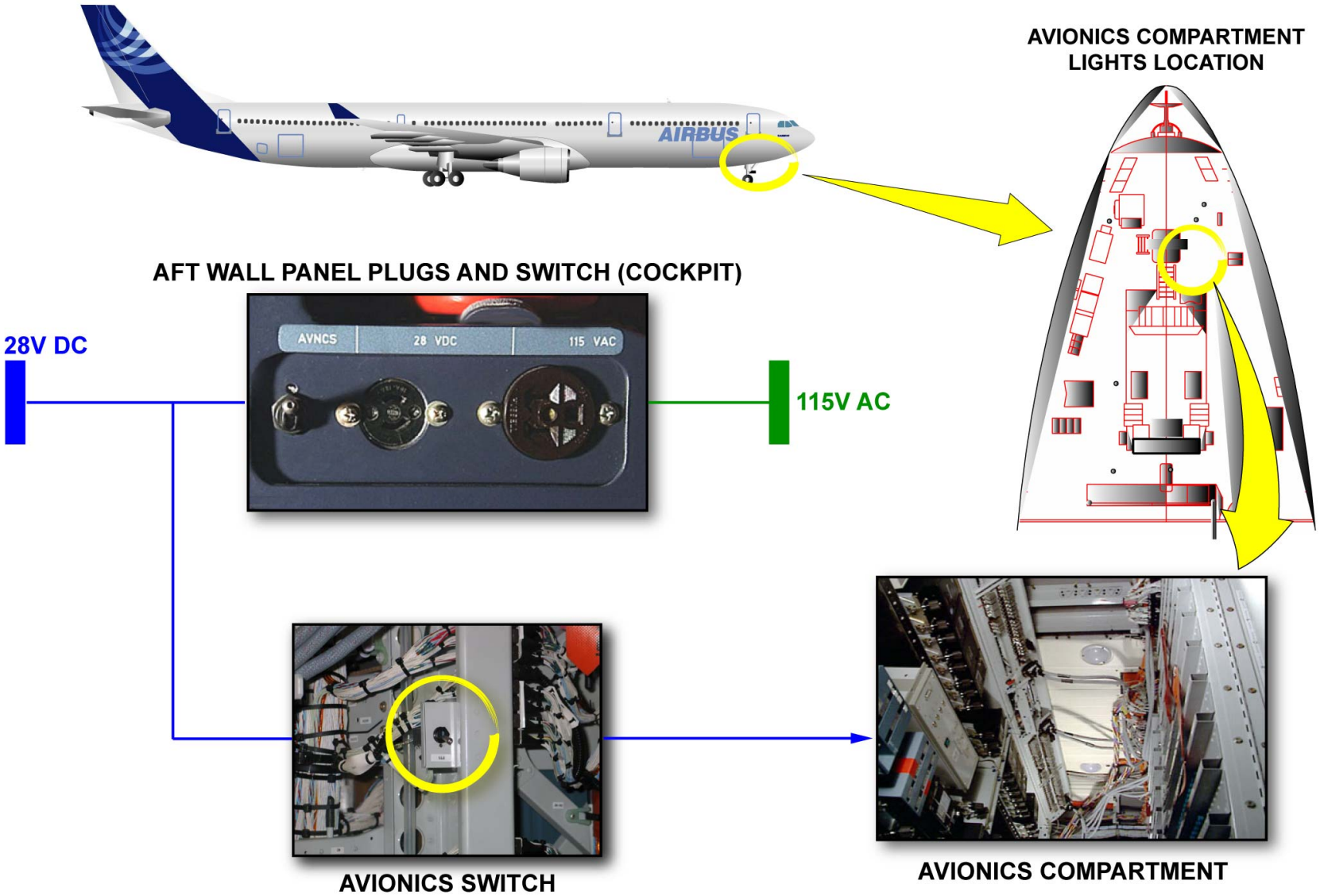

SERVICE COMPARTMENTS LIGHTING - AVIONICS COMPARTMENT LIGHTING

A/C LIGHTING SYSTEM LINE MAINTENANCE BRIEFING (2)

SERVICE COMPARTMENTS LIGHTING (continued)

WHEEL WELL LIGHTING

A light is installed in the nose wheel well and is controlled by, a switch located on the external power panel. Two lights are installed in the main wheel well and are controlled by a two-way switch, located in each main wheel well.

G7508471 - G3NT1T0 - FM33B1000000001

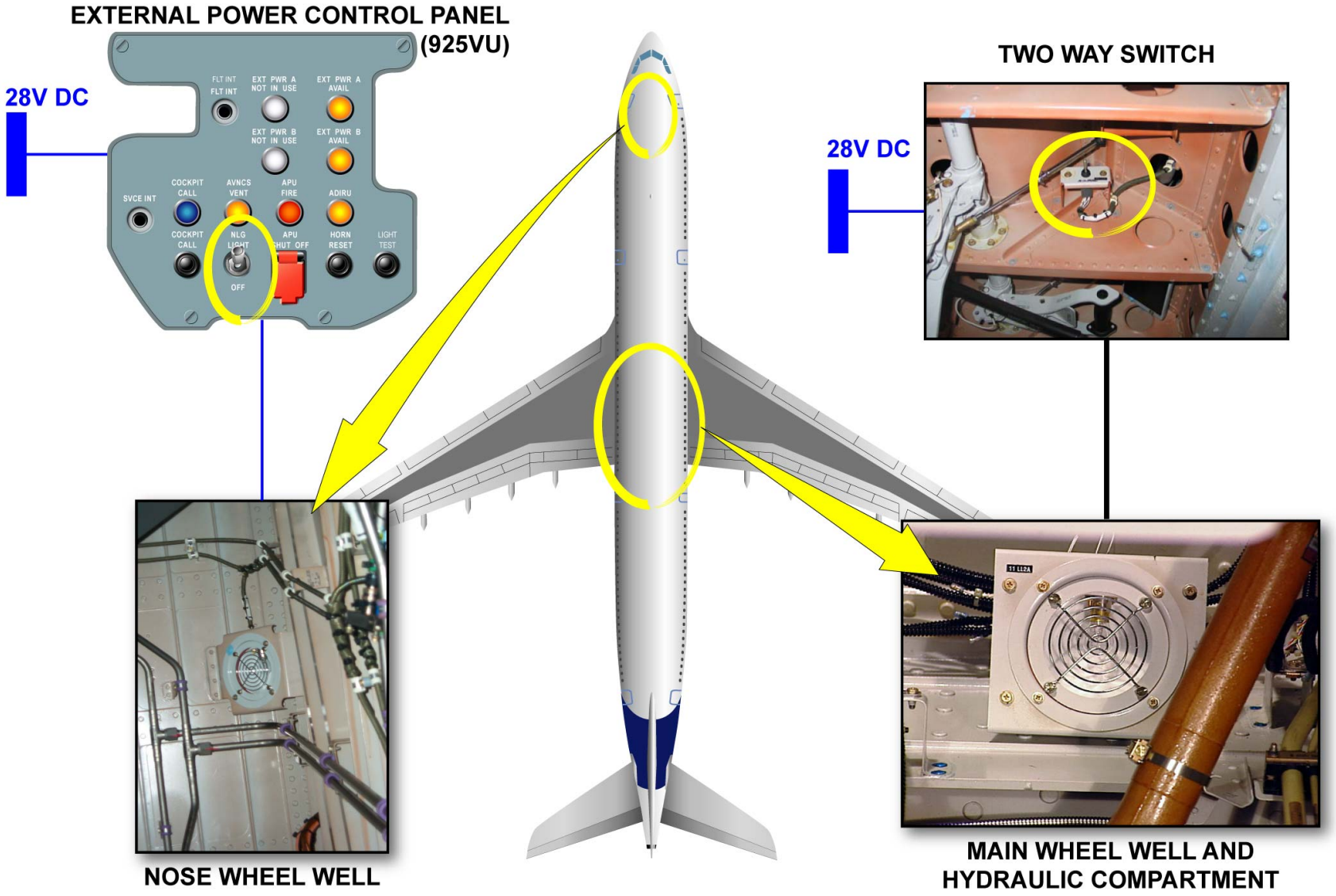

SERVICE COMPARTMENTS LIGHTING - WHEEL WELL LIGHTING

A/C LIGHTING SYSTEM LINE MAINTENANCE BRIEFING (2)

EXTERIOR LIGHTS

GENERAL

The exterior lighting system fulfills various functions such as:
- navigation and logo lights,
- runway turnoff lights,
- taxiing and take-off lights,
- landing lights,
- anti-collision strobe and beacon lights,
- wing and engine scan lights,
- taxi camera lights if installed (A340-600 and optional on A340-500).

G7508471 - G3NT1T0 - FM33B1000000001

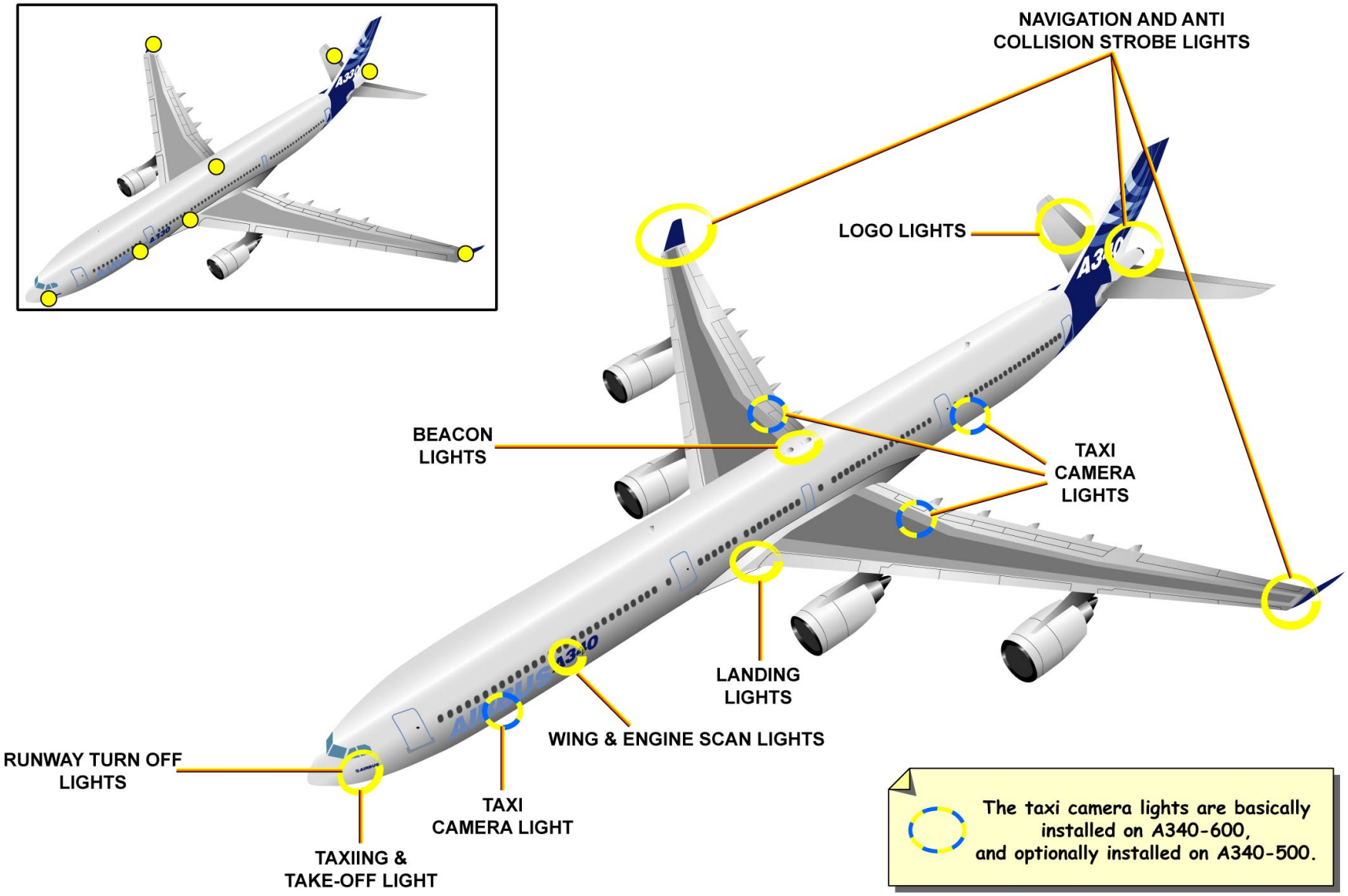

EXTERIOR LIGHTS - GENERAL

A/C LIGHTING SYSTEM LINE MAINTENANCE BRIEFING (2)

EXTERIOR LIGHTS (continued)

NAVIGATION LIGHTS

The navigation lights are used to give a visual indication of the position of the A/C and its direction of flight. The NAVigation & LOGO toggle switch controls this function.

G7508471 - G3NT1T0 - FM33B1000000001

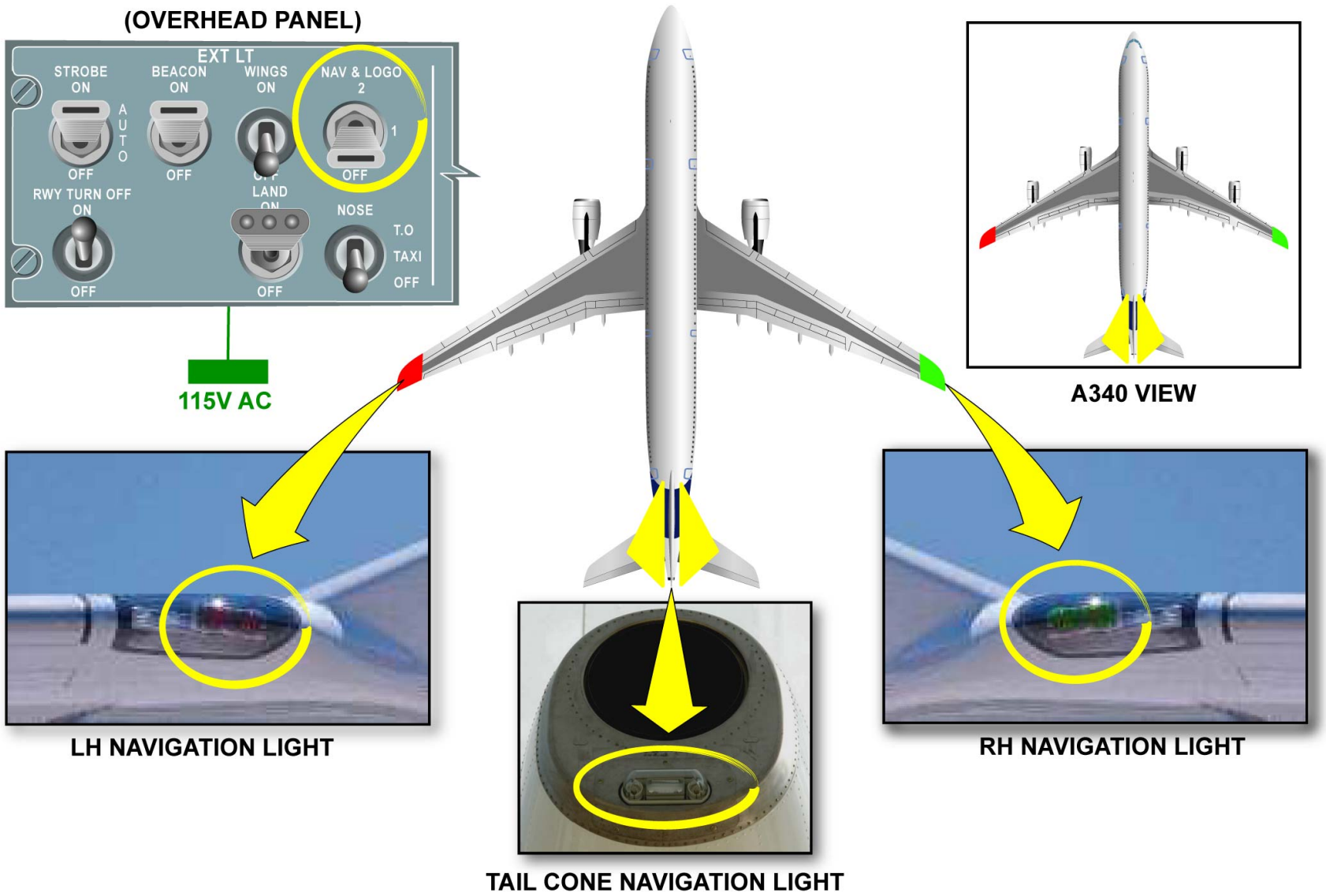

EXTERIOR LIGHTS - NAVIGATION LIGHTS

G7508471 - G3NT1T0 - FM33B1000000001

A/C LIGHTING SYSTEM LINE MAINTENANCE BRIEFING (2)

EXTERIOR LIGHTS (continued)

LOGO LIGHTS

Two lights are installed on each side of the Trimmable Horizontal Stabilizer (THS) to bring light onto the airline logo. They are controlled to ON by the NAV & LOGO toggle switch in position 1 or 2 with the Main Landing Gear (MLG) compressed or flaps extended.

G7508471 - G3NT1T0 - FM33B1000000001

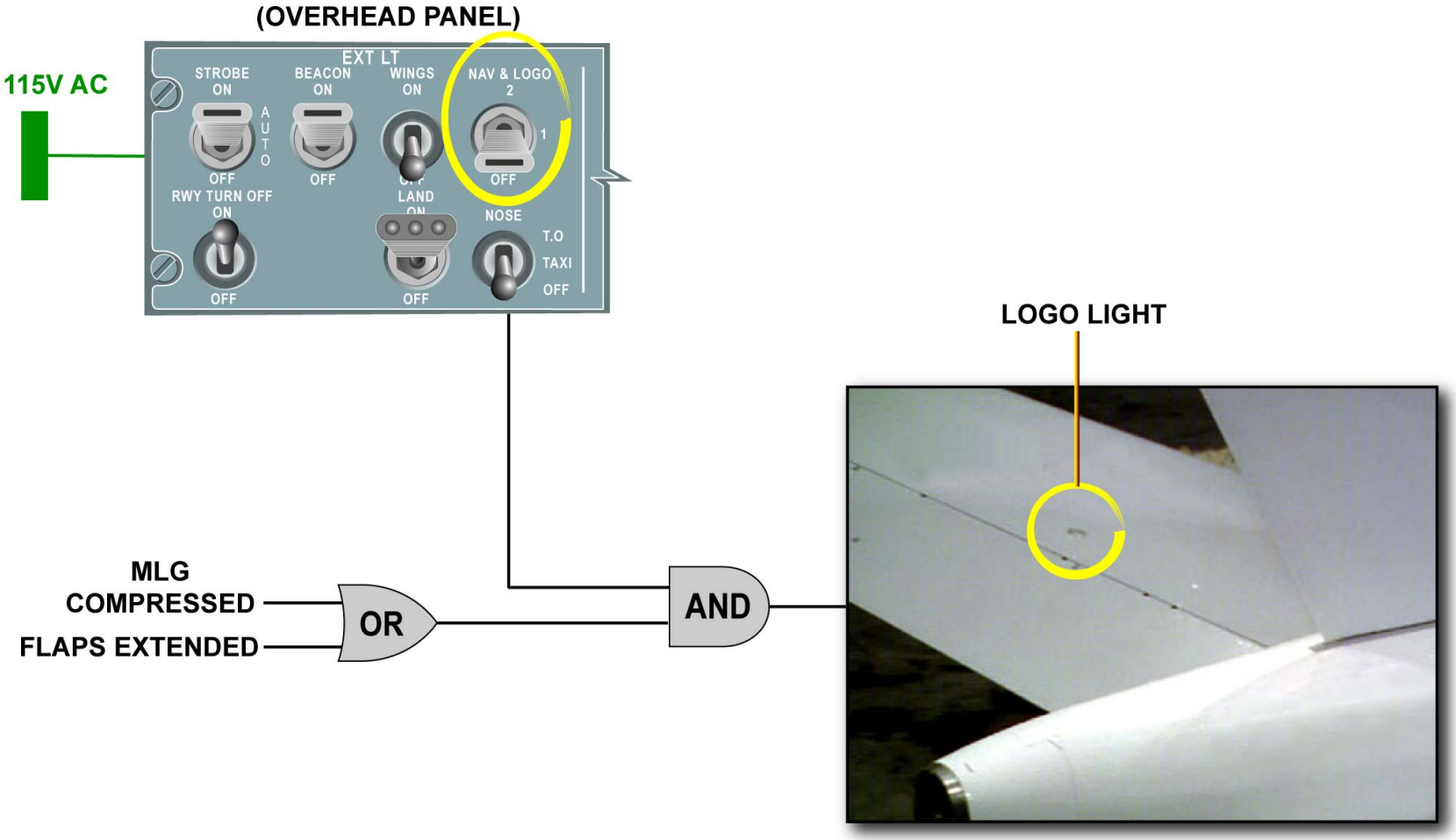

EXTERIOR LIGHTS - LOGO LIGHTS

G7508471 - G3NT1T0 - FM33B1000000001

A/C LIGHTING SYSTEM LINE MAINTENANCE BRIEFING (2)

EXTERIOR LIGHTS (continued)

RUNWAY TURNOFF LIGHTS

Two fixed-position runway turnoff lights, installed on the Nose Landing Gear (NLG), bring light to the lateral areas of the runway. They are controlled by the RunWaY TURN OFF toggle switch and operate only when the nose L/G is downlocked.

G7508471 - G3NT1T0 - FM33B1000000001

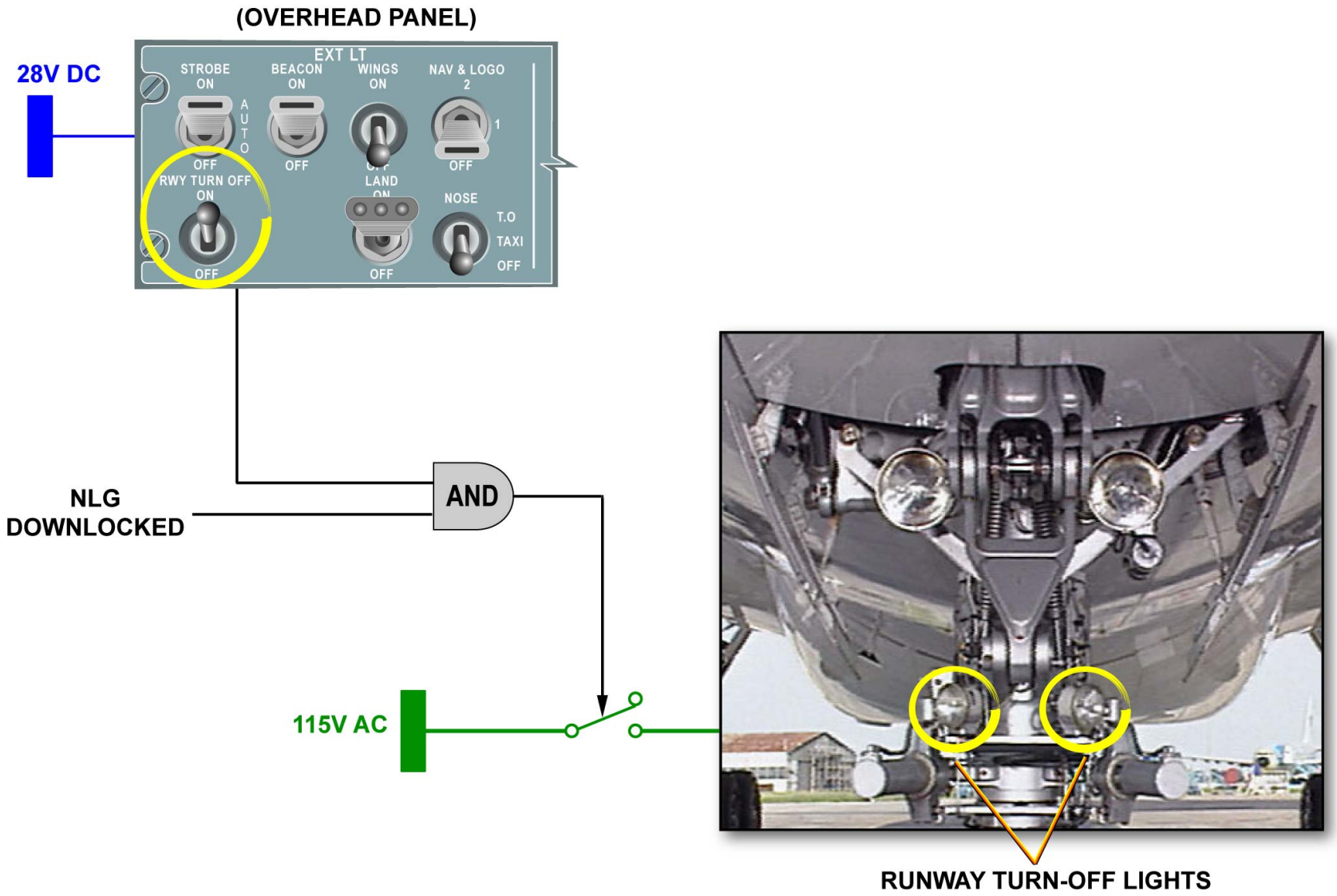

EXTERIOR LIGHTS - RUNWAY TURNOFF LIGHTS

A/C LIGHTING SYSTEM LINE MAINTENANCE BRIEFING (2)

EXTERIOR LIGHTS (continued)

TAXI CAMERA LIGHTING (A340-500/600)

Two halogen taxi camera lights are installed under the fuselage to light the taxiway in the vicinity of the NLG. Four halogen taxi camera lights are installed in the lower fuselage to light the taxiway outboard of the MLG. Two halogen taxi cameras lights are installed in the rear lower wing skin to light the outer area of the MLG. All lights are controlled by the RWY TURN OFF & CAMERA light control switch provided that at least one of the camera rotary selector on the 113VU is on TAXI position.

NOTE: The Taxiing Aid Camera System (TACS) is basic for the A340-600 whereas it is an option for the A340-500, and not available for the classic A330/A340.

G7508471 - G3NT1T0 - FM33B1000000001

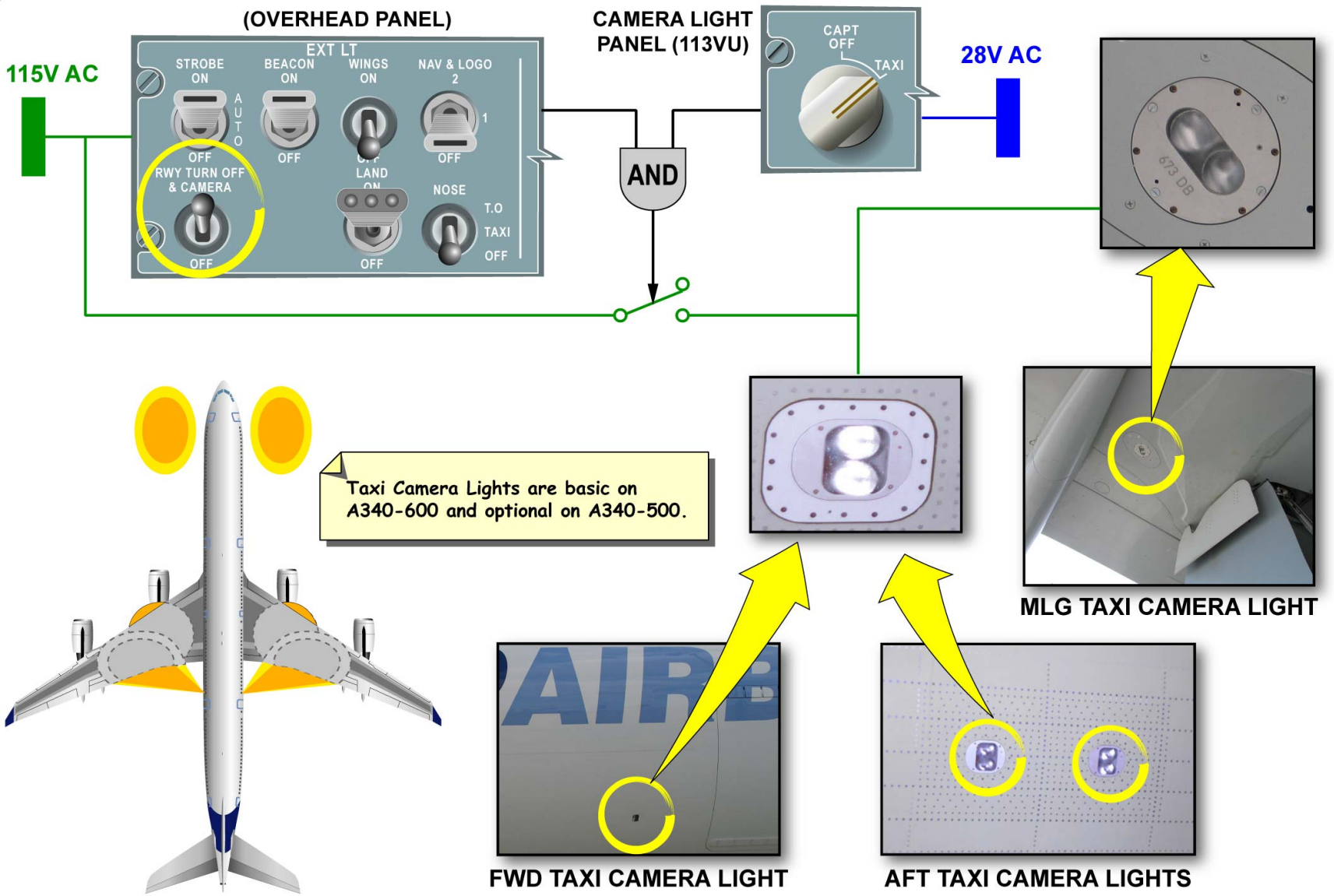

EXTERIOR LIGHTS - TAXI CAMERA LIGHTING (A340-500/600)

A/C LIGHTING SYSTEM LINE MAINTENANCE BRIEFING (2)

EXTERIOR LIGHTS (continued)

TAXIING AND TAKE-OFF LIGHTS

Two take-off and taxi lights are installed on the NLG in a fixed position. They are simultaneously controlled by the NOSE toggle switch and operate when the NLG is locked in the down position.

NOTE: All lights go off automatically when the L/G is no longer downlocked.

G7508471 - G3NT1T0 - FM33B1000000001

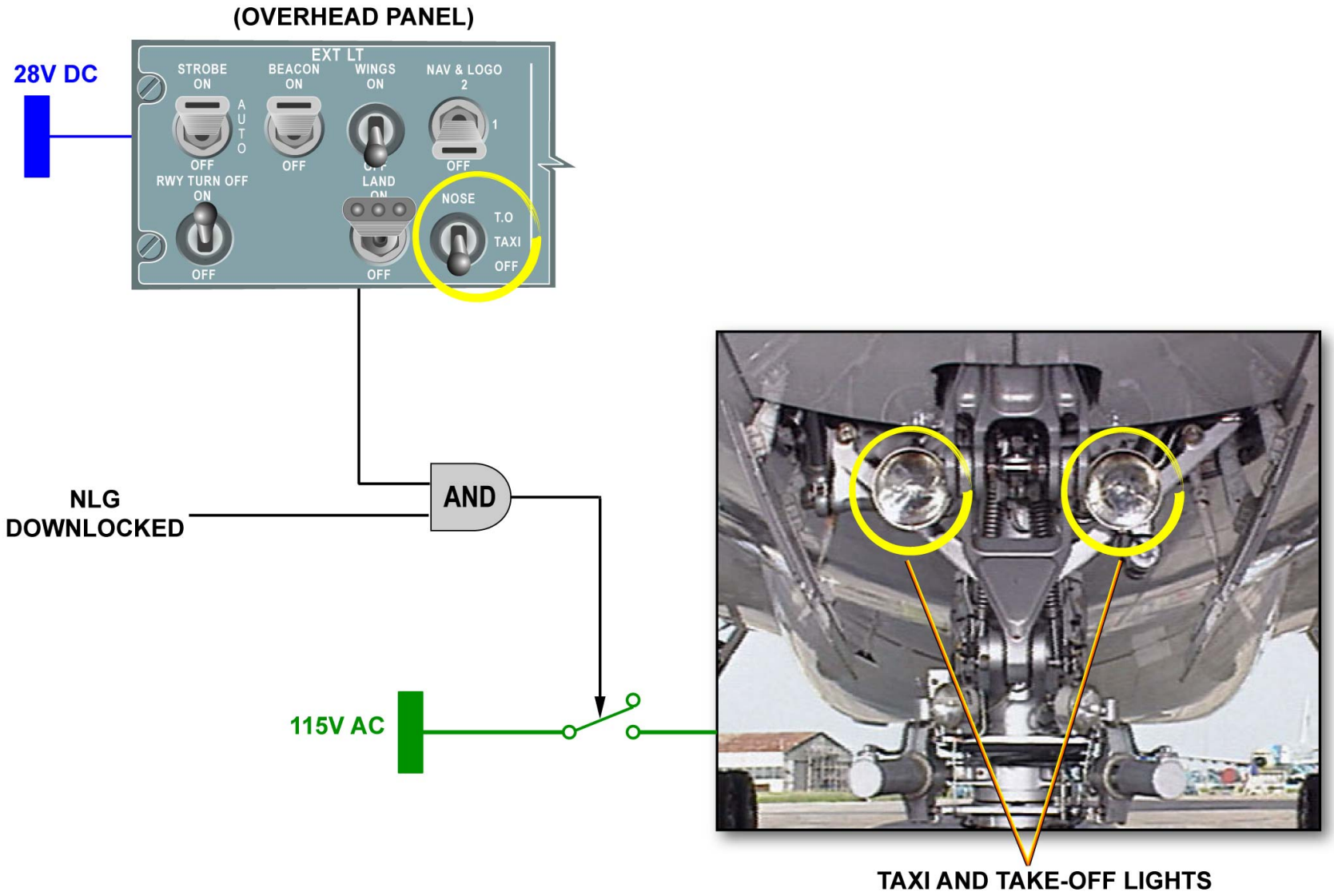

EXTERIOR LIGHTS - TAXIING AND TAKE-OFF LIGHTS

G7508471 - G3NT1T0 - FM33B1000000001

A/C LIGHTING SYSTEM LINE MAINTENANCE BRIEFING (2)

EXTERIOR LIGHTS (continued)

LANDING LIGHTS

A fixed landing light is installed in each wing root leading edge. The LAND switch simultaneously controls all the fixed landing lights.

G7508471 - G3NT1T0 - FM33B1000000001

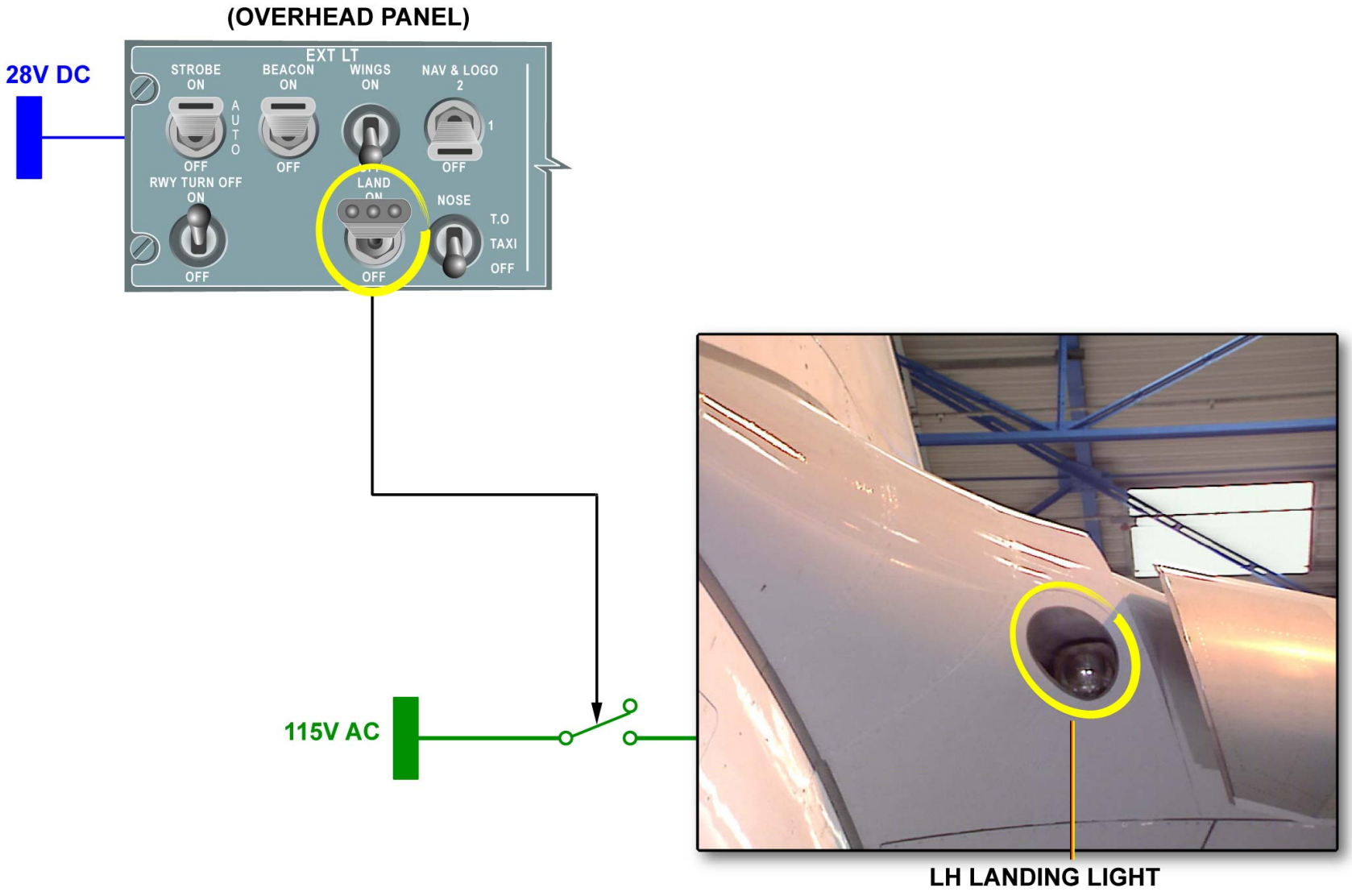

EXTERIOR LIGHTS - LANDING LIGHTS

G7508471 - G3NT1T0 - FM33B1000000001

A/C LIGHTING SYSTEM LINE MAINTENANCE BRIEFING (2)

EXTERIOR LIGHTS (continued)

ANTI-COLLISION STROBE

One white flashing strobe light is installed in each wing tip leading edge and one in the tail cone. They are simultaneously controlled by the STROBE toggle switch. In the AUTO position the strobe lights flash when the shock absorbers are not compressed. In the OFF position, during flight, a memo is displayed on the EWD.

G7508471 - G3NT1T0 - FM33B1000000001

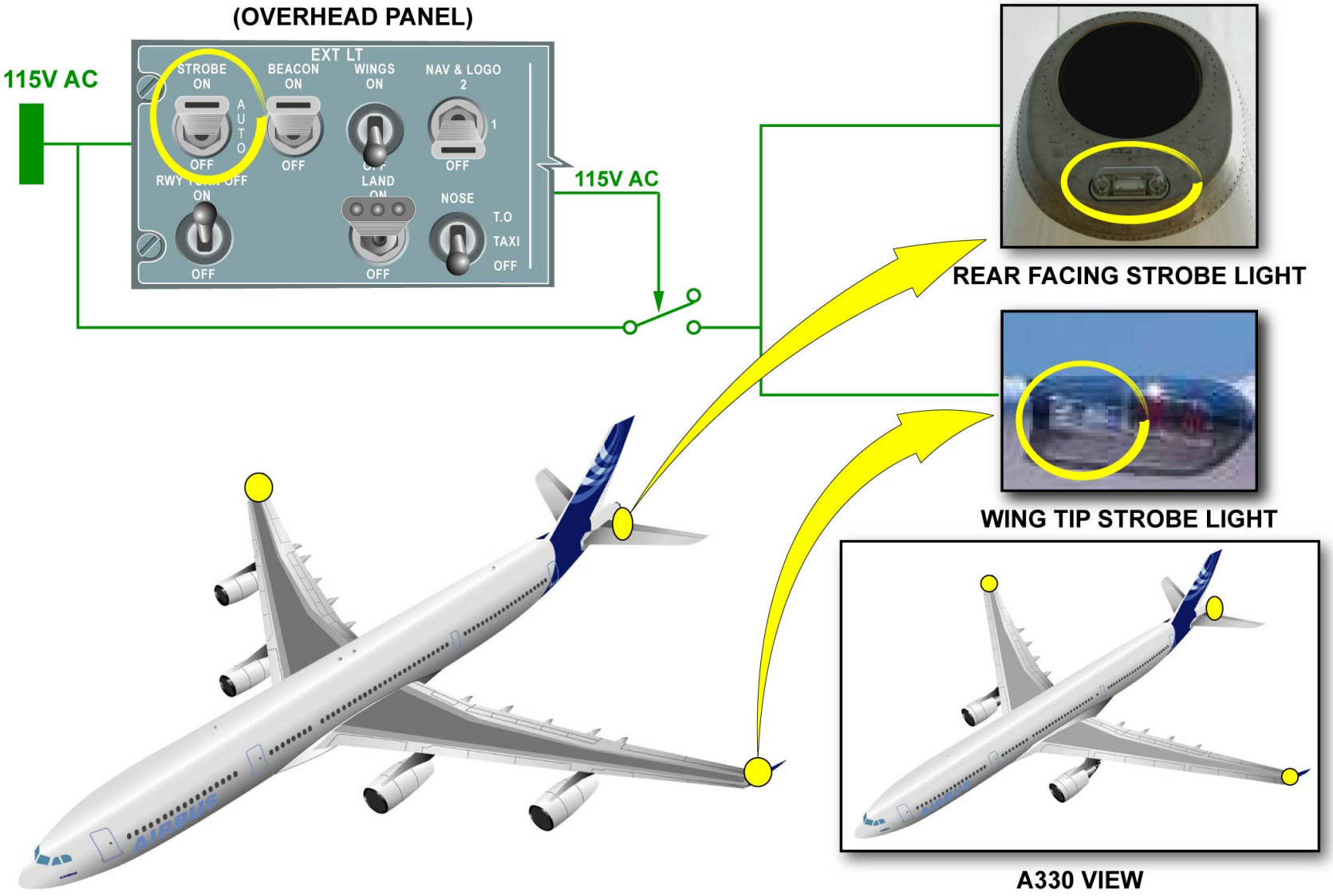

EXTERIOR LIGHTS - ANTI-COLLISION STROBE

G7508471 - G3NT1T0 - FM33B1000000001

A/C LIGHTING SYSTEM LINE MAINTENANCE BRIEFING (2)

EXTERIOR LIGHTS (continued)

BEACON LIGHTS

Two red flashing beacon lights are installed, one on the lower and one on the upper fuselage along the aircraft centerline. The BEACON switch controls the beacon. When anti-collision strobe lights and anti-collision beacon lights flash, a timing system controls them in order to flash alternately in a synchronized way.

G7508471 - G3NT1T0 - FM33B1000000001

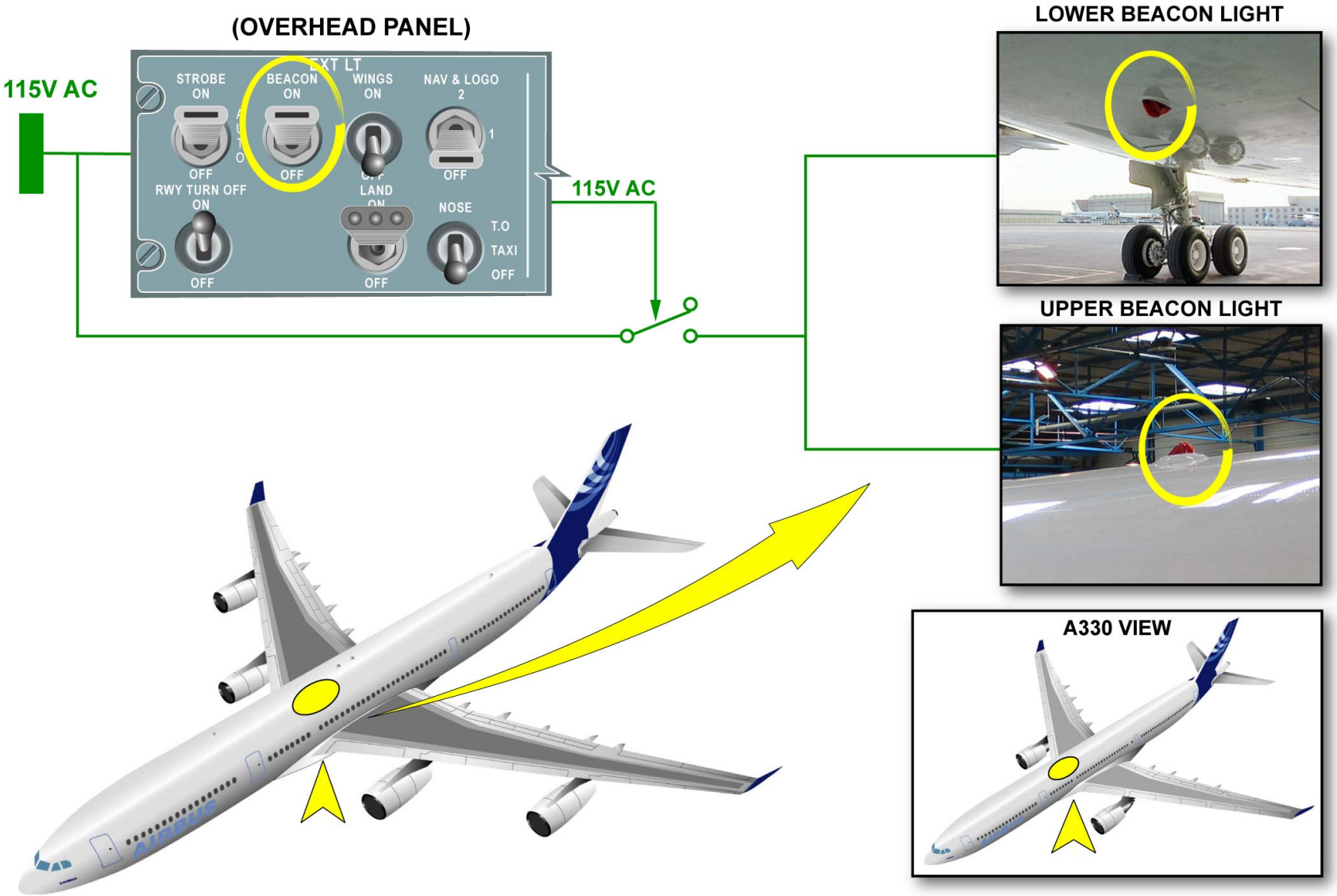

EXTERIOR LIGHTS - BEACON LIGHTS

A/C LIGHTING SYSTEM LINE MAINTENANCE BRIEFING (2)

EXTERIOR LIGHTS (continued)

WING AND ENGINE SCAN LIGHTS

Fixed-position wing and engine scan lights are installed on each side of the fuselage to let the flight crew visually detect ice on the engine air intakes and leading edges. The WINGS switch controls these lights. The wing and engine scan lights can be switched ON, on the ground for maintenance functions for a limited time only. Those lights are inhibited when the mid passengers door are open.

G7508471 - G3NT1T0 - FM33B1000000001

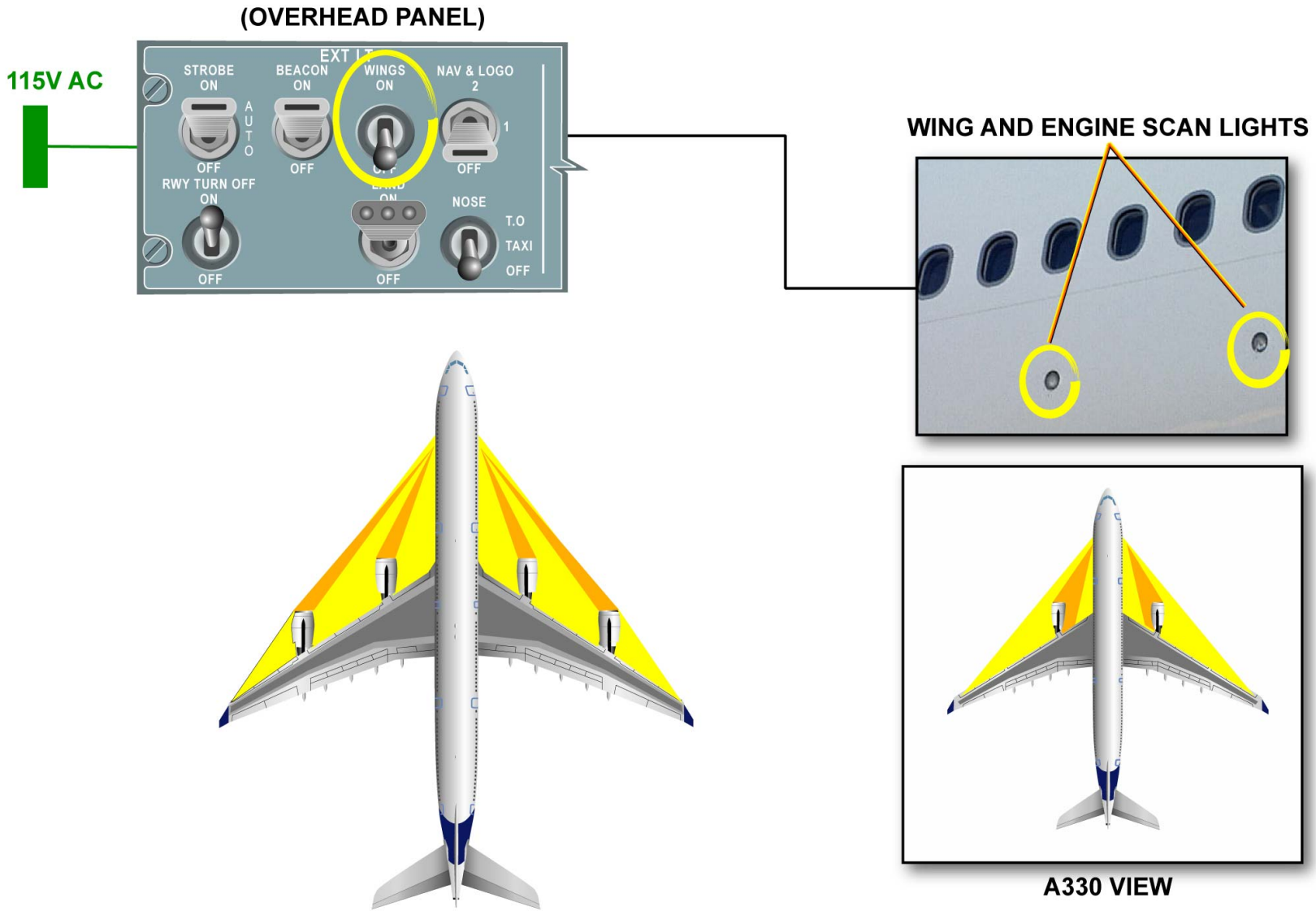

EXTERIOR LIGHTS - WING AND ENGINE SCAN LIGHTS

A/C LIGHTING SYSTEM LINE MAINTENANCE BRIEFING (2)

EMERGENCY LIGHTS

The cabin emergency lighting system comes on according to the flight phase or operational events (automatic mode) or by manually setting the selectors to ON. These selectors are the toggle switch in the cockpit and EMER P/B on the Flight Attendant Panel (FAP) in the cabin. The Emergency Power Supply Units (EPSUs) control and monitor the emergency lighting system entirely in accordance with the mode of system activation. The aim of this system is to ease the evacuation of the A/C when needed. The offwing escape-slide system on the A340-600 is installed at the overwing emergency-exits, and is operated electrically. Deployment of the escape-slide is automatic when you open the door with the escape-slide control handle (referred to as emergency control-handle) set in the ARMED position. The Slide-Release Power-Supply Unit (SRPSU), installed on the A340-600, is located above the ceiling panels between FRame40.6 and FR41 on the left hand side. The battery busbar 303PP supplies 28V DC power to operate the electrical escape-slide release system via the SRPSU. The emergency ceiling lights are installed behind the aisle air outlets on the A340 500/600.

NOTE: On the A340-500, the emergency ceiling light can also be used as a night lighting function in the aft cabin area on the left side.

G7508471 - G3NT1T0 - FM33B1000000001

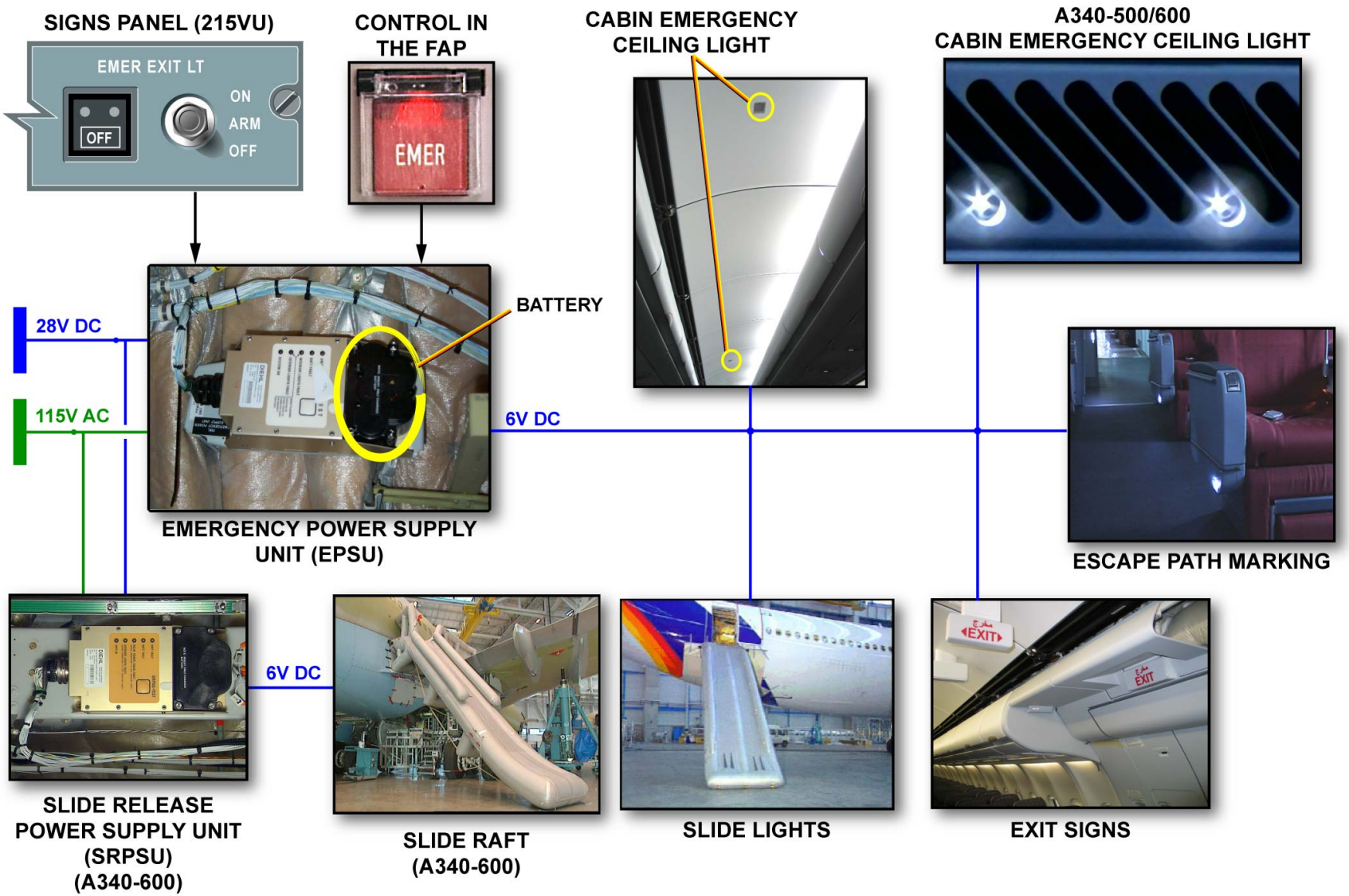

EMERGENCY LIGHTS

G7508471 - G3NT1T0 - FM33B1000000001

A/C LIGHTING SYSTEM LINE MAINTENANCE BRIEFING (2)

MAINTENANCE / TEST FACILITIES

The testing of the emergency lighting system can be done either through the Central Maintenance System (CMS), via the use of the MCDU, or individually (EPSU, SRPSU and related lights) via the test P/B and the control Light Emitting Diode (LEDs). When tested through the CMS, the emergency lighting system is totally tested, using the Cabin Intercommunication Data System (CIDS) as the main monitoring control system device.

G7508471 - G3NT1T0 - FM33B1000000001

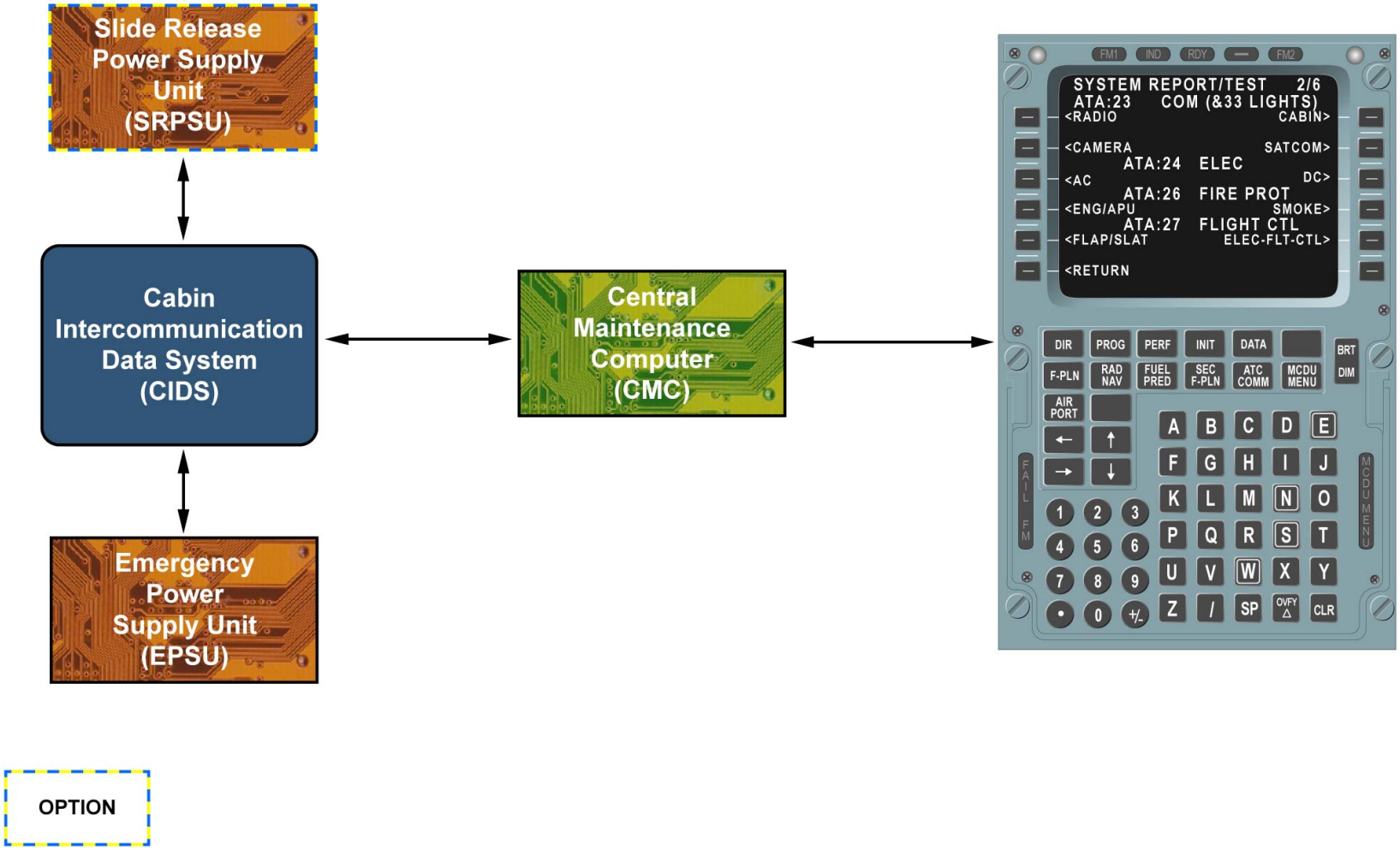

MAINTENANCE / TEST FACILITIES

CABIN LIGHTING SYS LINE MAINTENANCE BRIEFING (2)

GENERAL

The Flight Attendant Panel (FAP) CABIN LIGHTING page, which belongs to the Cabin Intercommunication Data System (CIDS), is used for the cabin lighting control.

G7508471 - G3NT1T0 - FM33B200000001

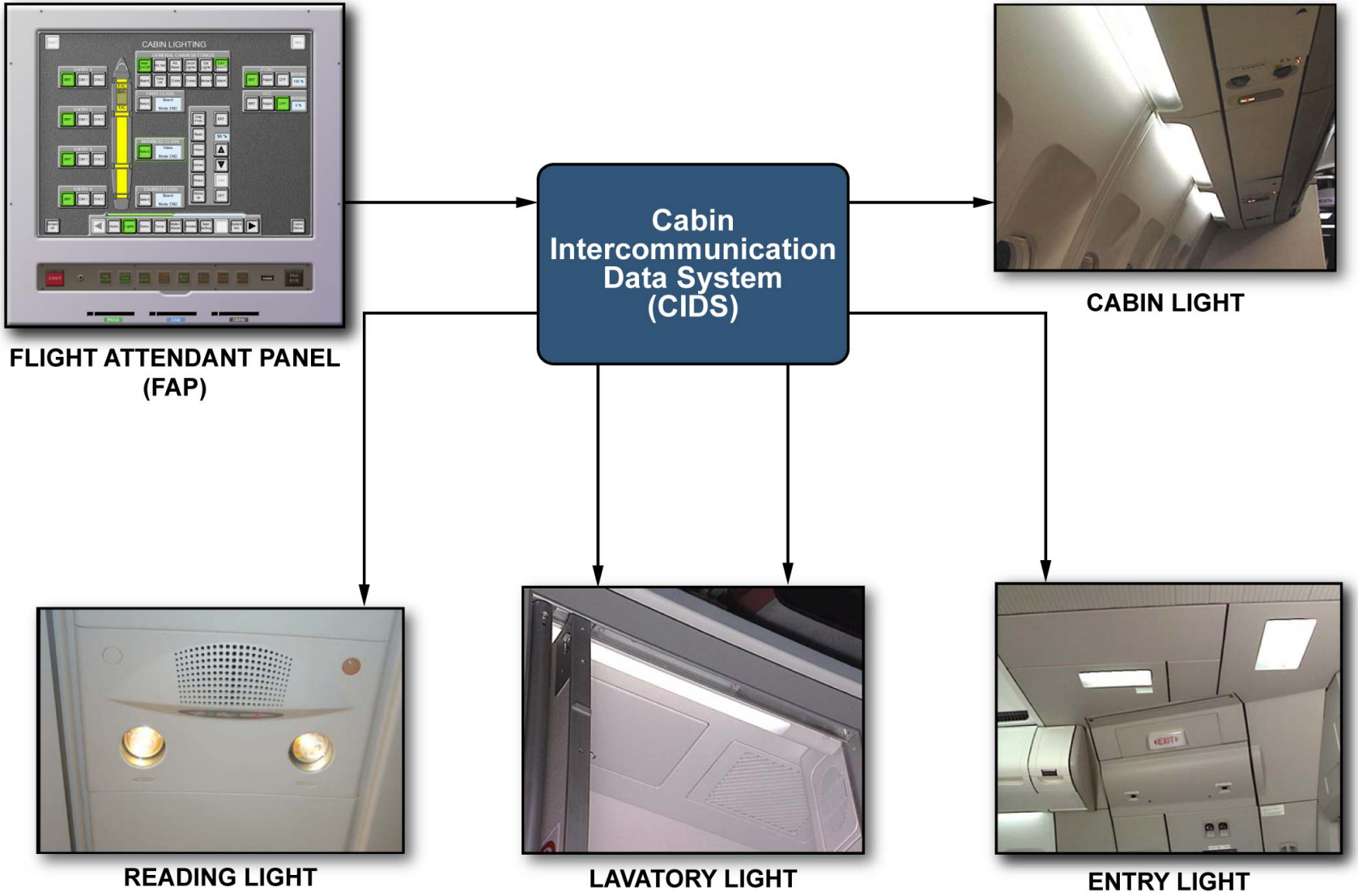

GENERAL

G7508471 - G3NT1T0 - FM33B2000000001

CABIN LIGHTING SYS LINE MAINTENANCE BRIEFING (2)

CABIN

The basic cabin lighting has four fluorescent tube strips. 2 lighting strips are installed on each sidewall, outboard of the lateral hatrack and 2 on the inboard side of the ceiling panels. The CABIN LIGHTING page on the FAP is used for the control of all the cabin lighting. This is done via two Directors and several Decoder/Encoder Units A (DEUs A), all of which are part of the CIDS. The CABIN LIGHTING page aircraft symbol displays the cabin configuration and furnishing chosen by the airline and gives the lighting status, in real time, via the selections made on the FAP touch screen. The general cabin settings are as follows:
- Main On/Off,
- Reading/Lights Set and Reset,
- Decor and Dot Lights,
- DAY NIGHT pre-selection.

G7508471 - G3NT1T0 - FM33B2000000001

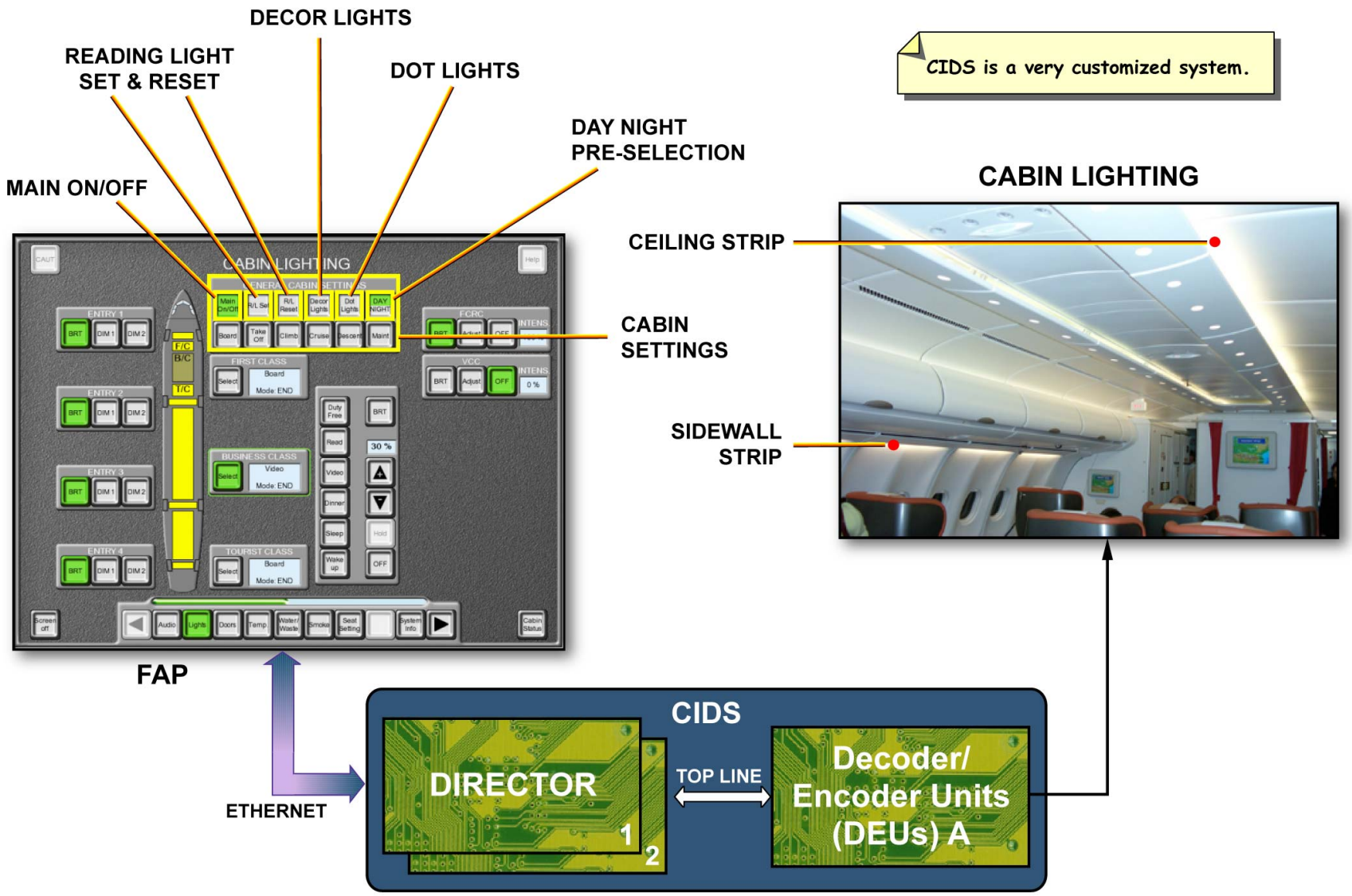
DECOR LIGHTS
READING LIGHT SET & RESET
DOT LIGHTS
DAY NIGHT PRE-SELECTION
MAIN ON/OFF
CIDS is a very customized system.
CABIN LIGHTING
CEILING STRIP
CABIN SETTINGS
SIDEWALL STRIP
FAP
ETHERNET
CIDS
DIRECTOR
1
2
TOP LINE
Decoder/ Encoder Units (DEUs) A

CABIN

CABIN LIGHTING SYS LINE MAINTENANCE BRIEFING (2)

CABIN (continued)

CABIN LIGHTING

A set of additional full cabin light zone pre-selections is available,
this could be:
- Boarding,
- Climb,
- Cruise,
- Descent,
- Disembarkment,
- Maintenance.

G7508471 - G3NT1T0 - FM33B2000000001

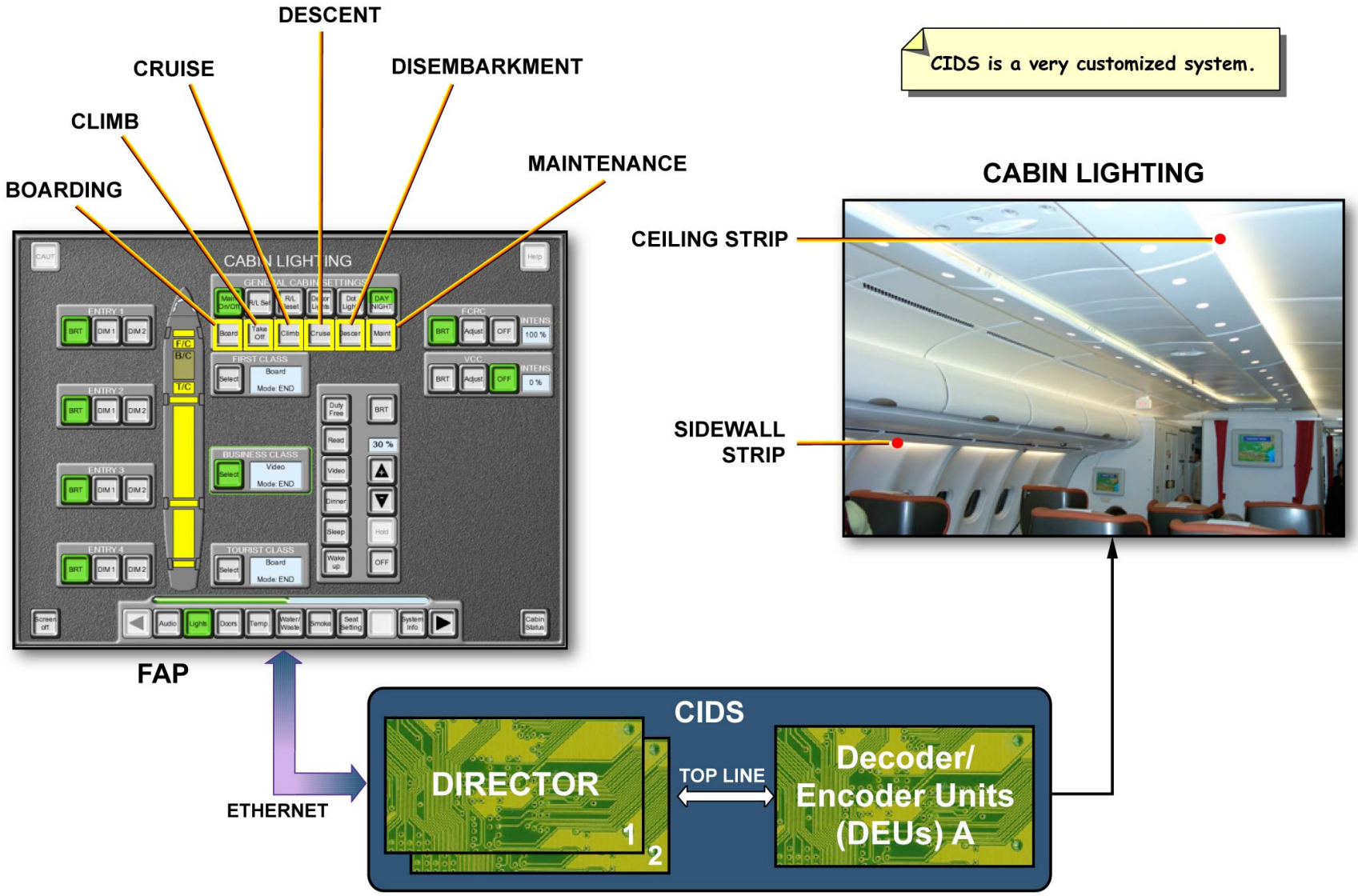

CABIN - CABIN LIGHTING

G7508471 - G3NT1T0 - FM33B2000000001

CABIN LIGHTING SYS LINE MAINTENANCE BRIEFING (2)

CABIN (continued)

FAP CABIN LIGHTING

By selecting the related CLASS key, an advanced control is possible for each zone with a soft and smooth dimming from 5 to 100%. Up to 6 more scenarios, defined by the airline, are possible. Each one corresponds to a predefined light level, being adjusted if necessary, and available until the scenario stops. In the example shown on the screen, the BUSINESS CLASS is selected with the video scenario running, determining a light brightness level at 30%

G7508471 - G3NT1T0 - FM33B2000000001

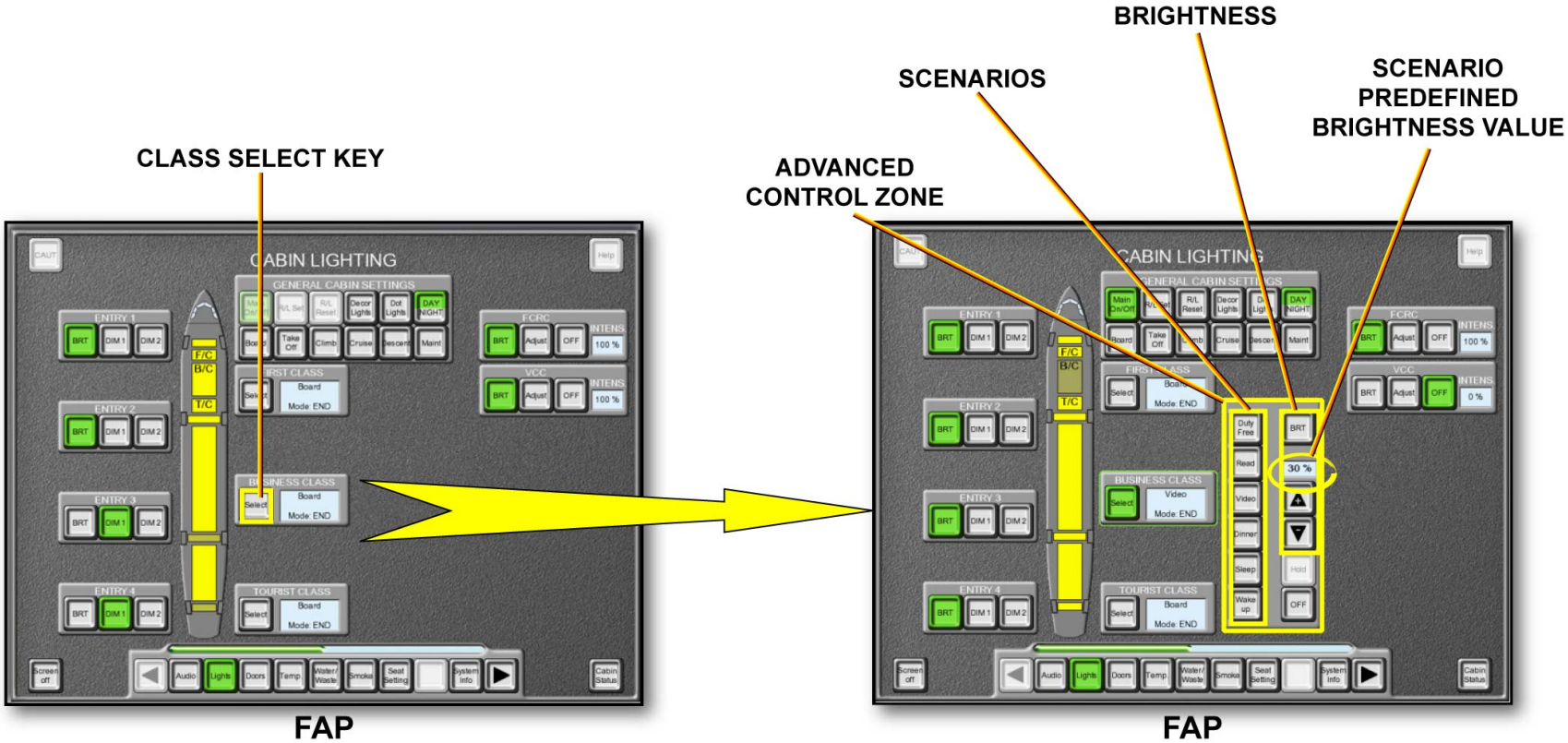

CIDS is a very customized system.

CABIN - FAP CABIN LIGHTING

CABIN LIGHTING SYS LINE MAINTENANCE BRIEFING (2)

CABIN (continued)

CONTROL

Additional lighting and intensity control such as Flight Crew Rest Compartment (FCRC) can be added following cabin configuration and furnishing.

G7508471 - G3NT1T0 - FM33B200000001

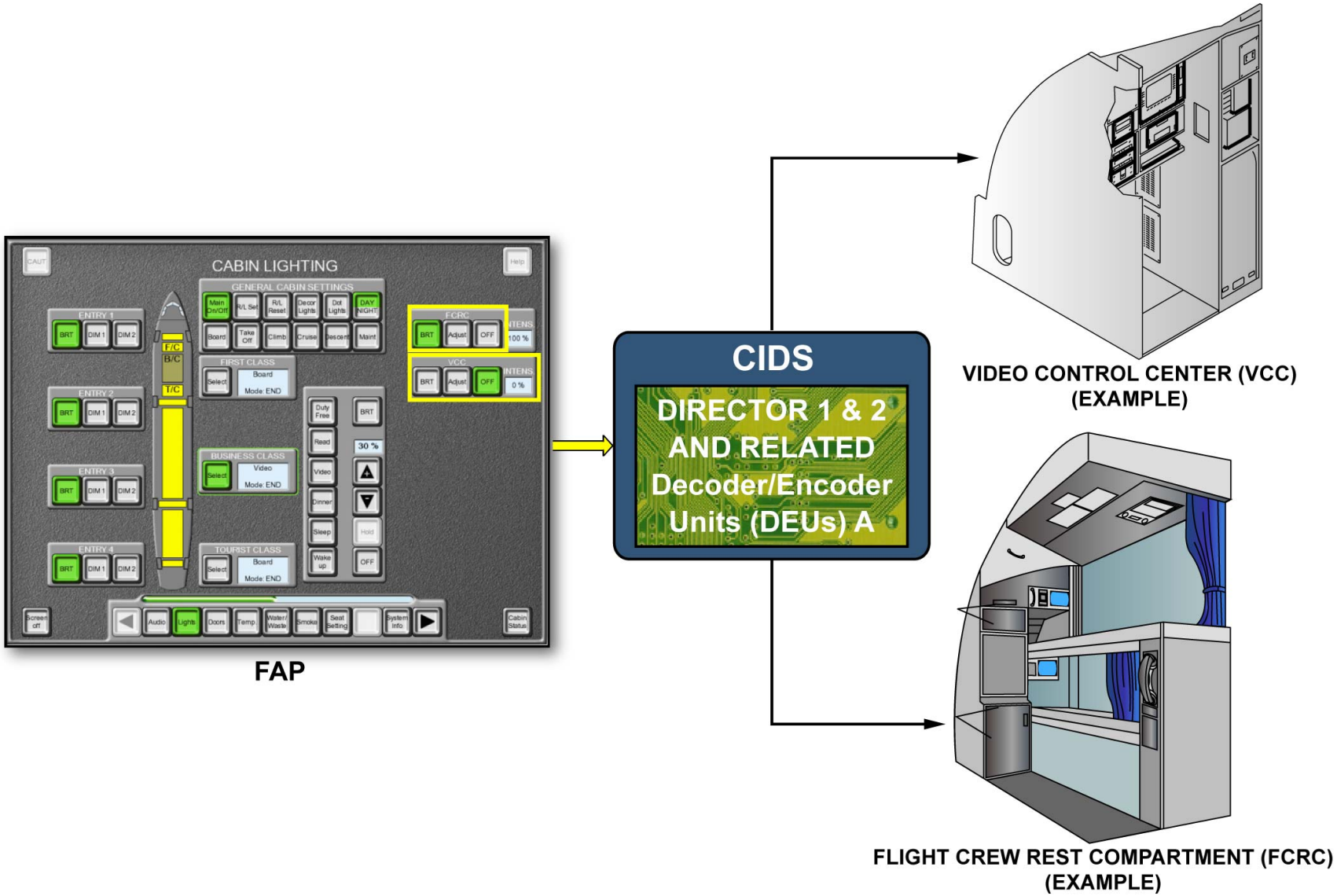

CABIN - CONTROL

G7508471 - G3NT1T0 - FM33B2000000001

CABIN LIGHTING SYS LINE MAINTENANCE BRIEFING (2)

LAVATORY

Each lavatory (on demand) has one or two fluorescent tubes supplied with 115V AC, a set of lights installed in the mirror and a kick strip lighting supplied with 28V DC. There is a lavatory sign (LED technology) located in the cabin to show if the lavatory is occupied. Some of the mirror set lights come on when the aircraft is energized. The remaining ones come on as soon as the door is closed and locked. When the lavatory door is unlocked, the fluorescent tube brightness level is 50%. When the door is closed and locked, the brightness level changes to 100% and the lavatory occupied sign turns red. Regardless of the door position, the kick strip lights are on permanently during the flight. The Main On/Off P/B on the FAP lights the lavatory fluorescent tubes to 50% or switches them off. As long as the door is unlocked, the lavatory sign shows green. Optionally, the luminance on the LOS housing is automatically dimmable by the means of an internal light sensor between maximum and minimum level in appreciatively 1 sec to adapt the sign luminance to the ambient brightness.

G7508471 - G3NT1T0 - FM33B2000000001

OPTION

		DOOR OPENED OR CLOSED BUT UNLOCKED	DOOR CLOSED AND LOCKED
115V AC	FLUORESCENT TUBES BALLAST UNIT	Brightness level 50%	Brightness level 100%
28V DC	SET OF LIGHTS IN THE MIRROR	Some are illuminated	Remaining ones illuminated
	KICK STRIP ILLUMINATION	ON	ON

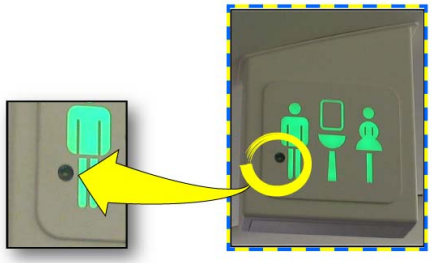

LIGHT SENSOR

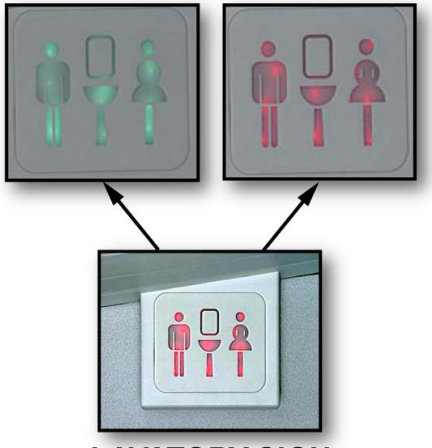

LAVATORY SIGN

LAVATORY LIGHTING

LAVATORY

CABIN LIGHTING SYS LINE MAINTENANCE BRIEFING (2)

PASSENGER READING

The passenger reading lights (LEDs), are located in the Passenger Service Unit (PSU). They are adjusted for each seat. The R/L Set and R/L Reset P/Bs on the FAP control all the reading lights. The related DEU A lets the reading light be turned on, via a Passenger Interface and Supply Adapter (PISA), which can control and monitor up to 4 reading lights. Passengers can control the reading light with an in-seat P/B via the In Flight Entertainment System (IFES).

G7508471 - G3NT1T0 - FM33B2000000001

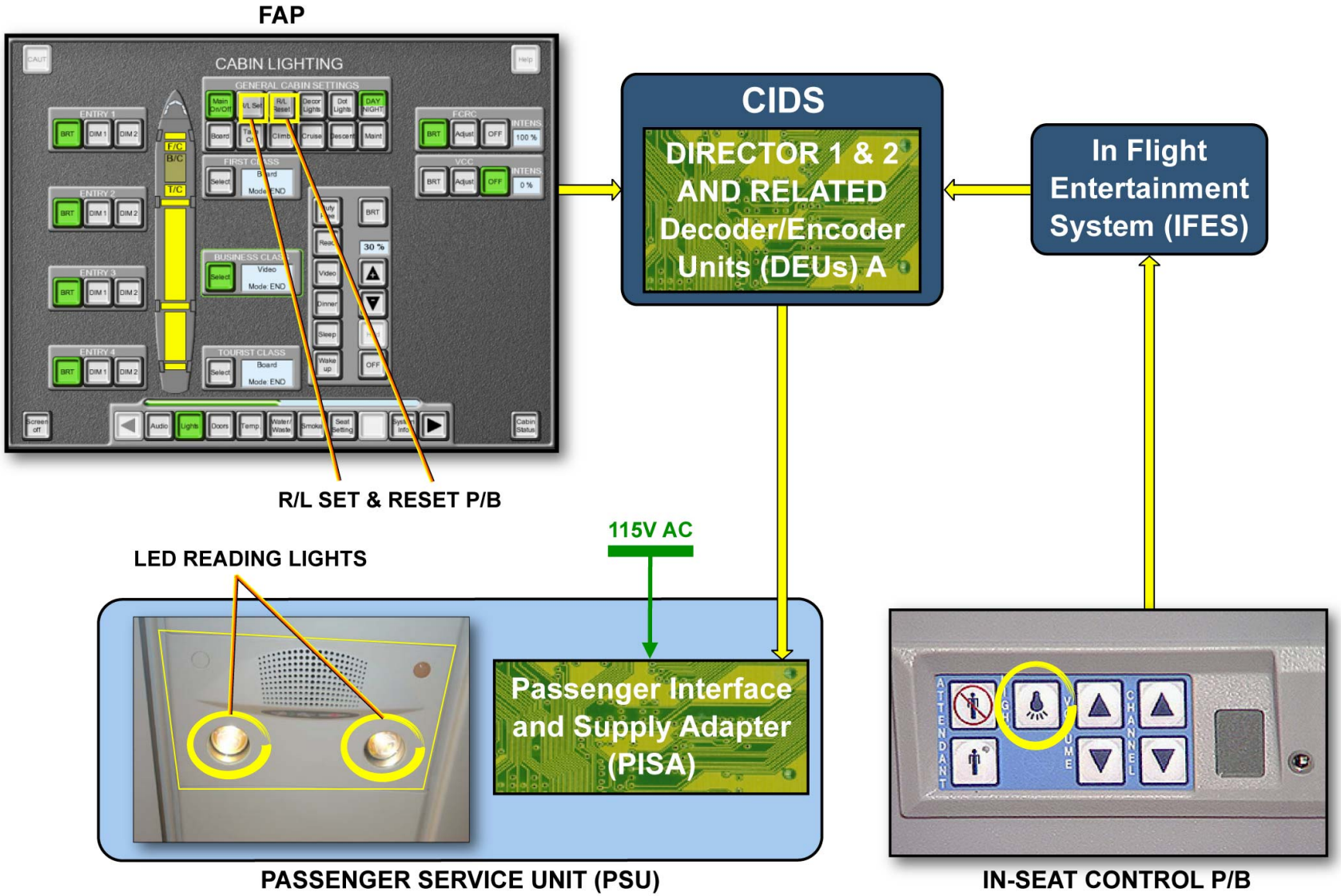

PASSENGER READING

CABIN LIGHTS D/O (3)

CABIN LIGHTING

The basic cabin light is composed of four fluorescent tube strips. Two lighting strips are installed on each sidewall, outboard of the lateral hatrack and two on the inboard side of the ceiling panels.

GENERAL

The Flight Attendant Panel (FAP) light page controls the whole cabin lighting through the Cabin Intercommunication Data System (CIDS).

G7508471 - G3NT1T0 - FM33D200000002

The FAP pages shown as example in this module are A340-600 pages.

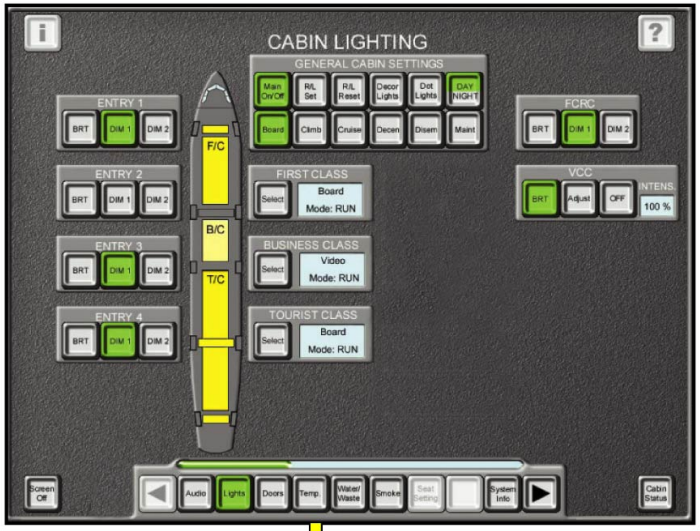

FAP LIGHT PAGE

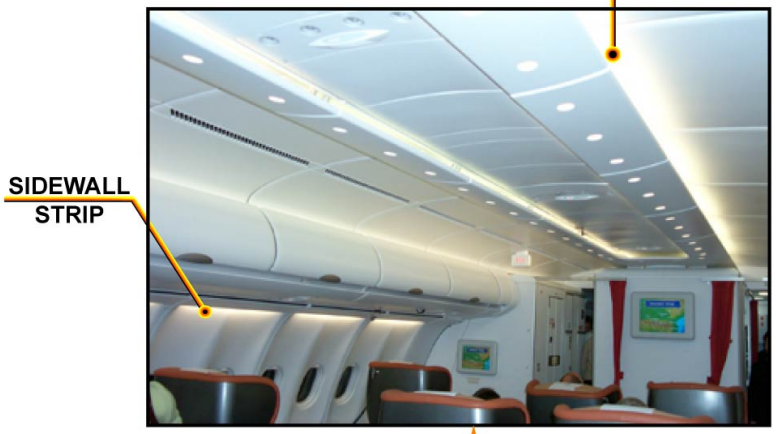

CABIN ILLUMINATION

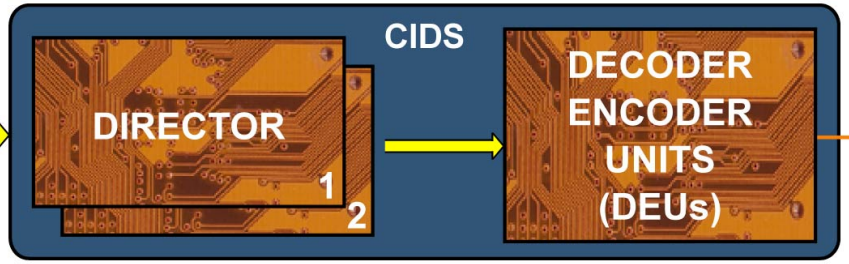

CABIN LIGHTING - GENERAL

G7508471 - G3NT1T0 - FM33D200000002

CABIN LIGHTS D/O (3)

CABIN LIGHTING (continued)

DESCRIPTION

The FAP light page reflects the cabin layout characteristics. The cabin lighting scenarios are loaded in the Cabin Assignment Module (CAM) according to the cabin layout and the airline definitions. Any order for cabin light setting in the cabin is mainly done via the FAP.
Director 1 broadcasts orders to the cabin Decoder Encoder Units A (DEUs A). Director 2 is in hot-standby mode and runs in parallel with exactly the same system status information at any given time. It is able to control lighting at any time.
Each DEU A can transmit illumination requests from the director to 8 Advanced Integrated Ballast Units (AIBUs) maximum.

G7508471 - G3NT1T0 - FM33D200000002

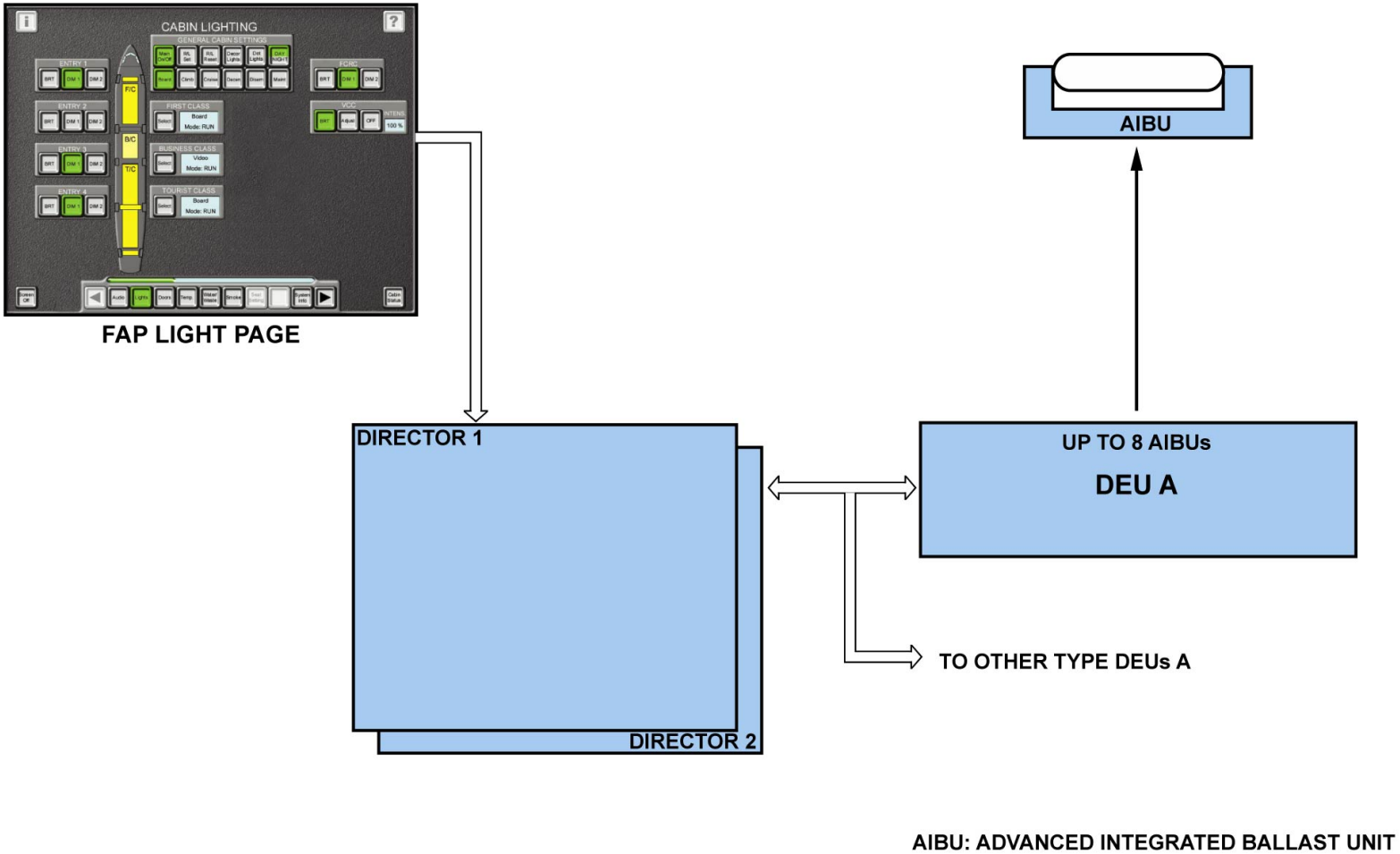

CABIN LIGHTING - DESCRIPTION

G7508471 - G3NT1T0 - FM33D200000002

CABIN LIGHTS D/O (3)

CABIN LIGHTING (continued)

OPERATION

In normal operation, orders from the FAP (such as Main On/Off, dimming of the Business Class, Boarding scenario to a predefined lighting value, etc) are sent simultaneously via an ETHERNET data link to the CIDS Directors 1 and 2.
The main characteristics of this ETHERNET data link signal are:
- high speed of 10Mb/sec,
- same signal characteristics from the FAP to each CIDS director.
Note that the Main On/Off control is only available on ground.
Upon orders received from the FAP, Director 1 broadcasts the request to the cabin DEU A on the TOP LINE DATA BUS.
The TOP LINE DATA BUS is a 14 Bits data word - 4Mb/sec signal.
Once acknowledged by the DEU A, the request is converted into a BIDIRECTIONAL SERIAL DATA INTERFACE signal and transmitted to the AIBU. The AIBUs then power fluorescent tubes accordingly. Each AIBU is supplied with 115 VAC from the AC Normal bus. Each DEU A can transmit illumination requests from the director to 8 AIBUs maximum.
When the cockpit door is open and the engine is running, the forward entrance area lighting is dimmed to 10%.
In abnormal configuration such as either rapid cabin decompression or a total CIDS failure, the cabin lights up at 100%.
Note that the entrance lighting zones remain at the same selected level of brightness.

G7508471 - G3NT1T0 - FM33D200000002

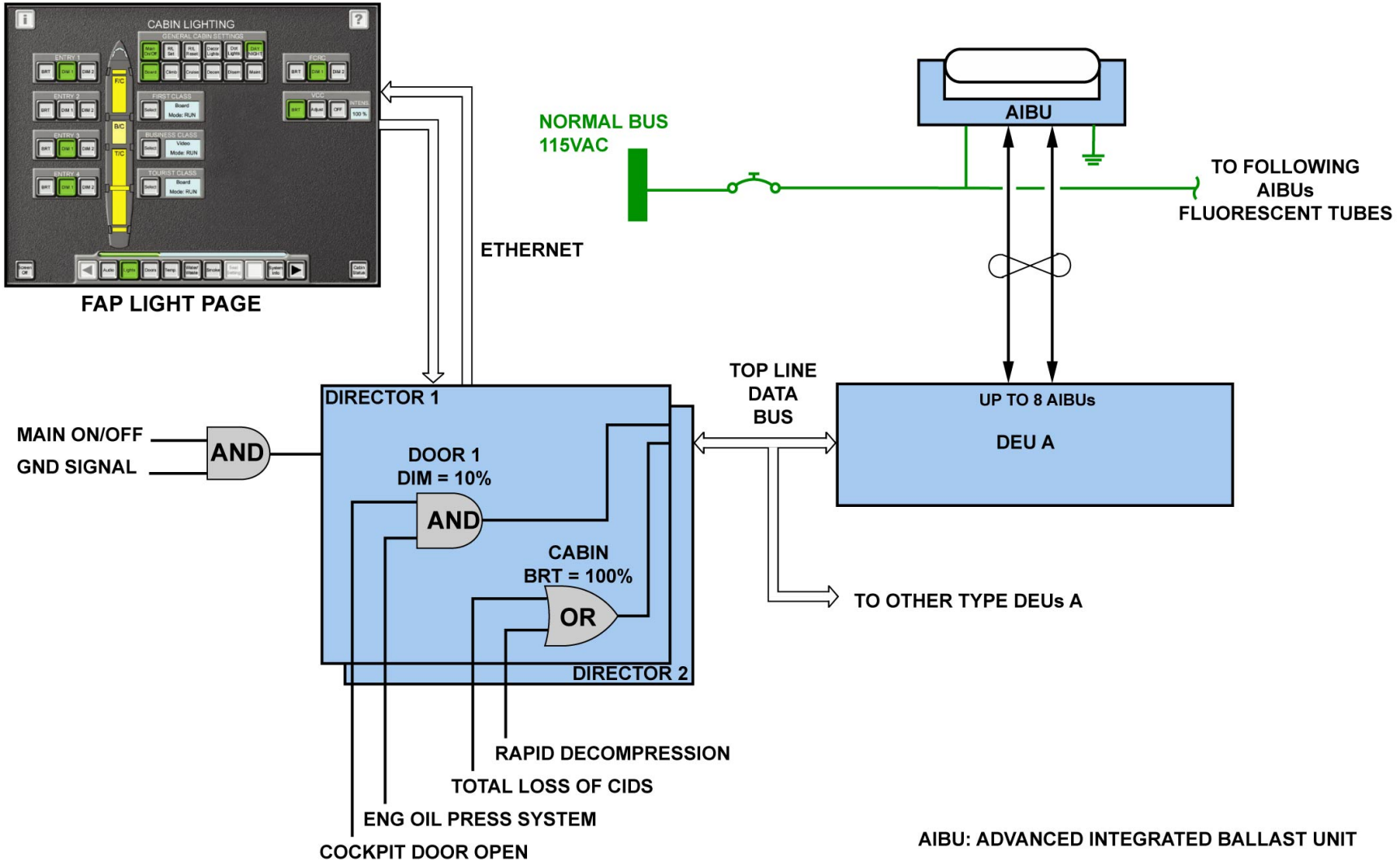

CABIN LIGHTING - OPERATION

G7508471 - G3NT1T0 - FM33D200000002

CABIN LIGHTS D/O (3)

LAVATORY LIGHTING

Each lavatory has (on demand):
- one or two fluorescent tubes supplied with 115 VAC,
- a set of lights installed in the mirror, supplied with 28 VDC,
- kick strip light (LED Technology), supplied with 28 VDC.

There is a lavatory sign (LED Technology) located in the cabin to show the location of the lavatories, and if the lavatories are occupied.
Optionally, the luminance on the LOS housing is automatically dimmable by the means of an internal light sensor between maximum and minimum level in approximately1 sec to adapt the sign luminance to the ambient brightness.

G7508471 - G3NT1T0 - FM33D200000002

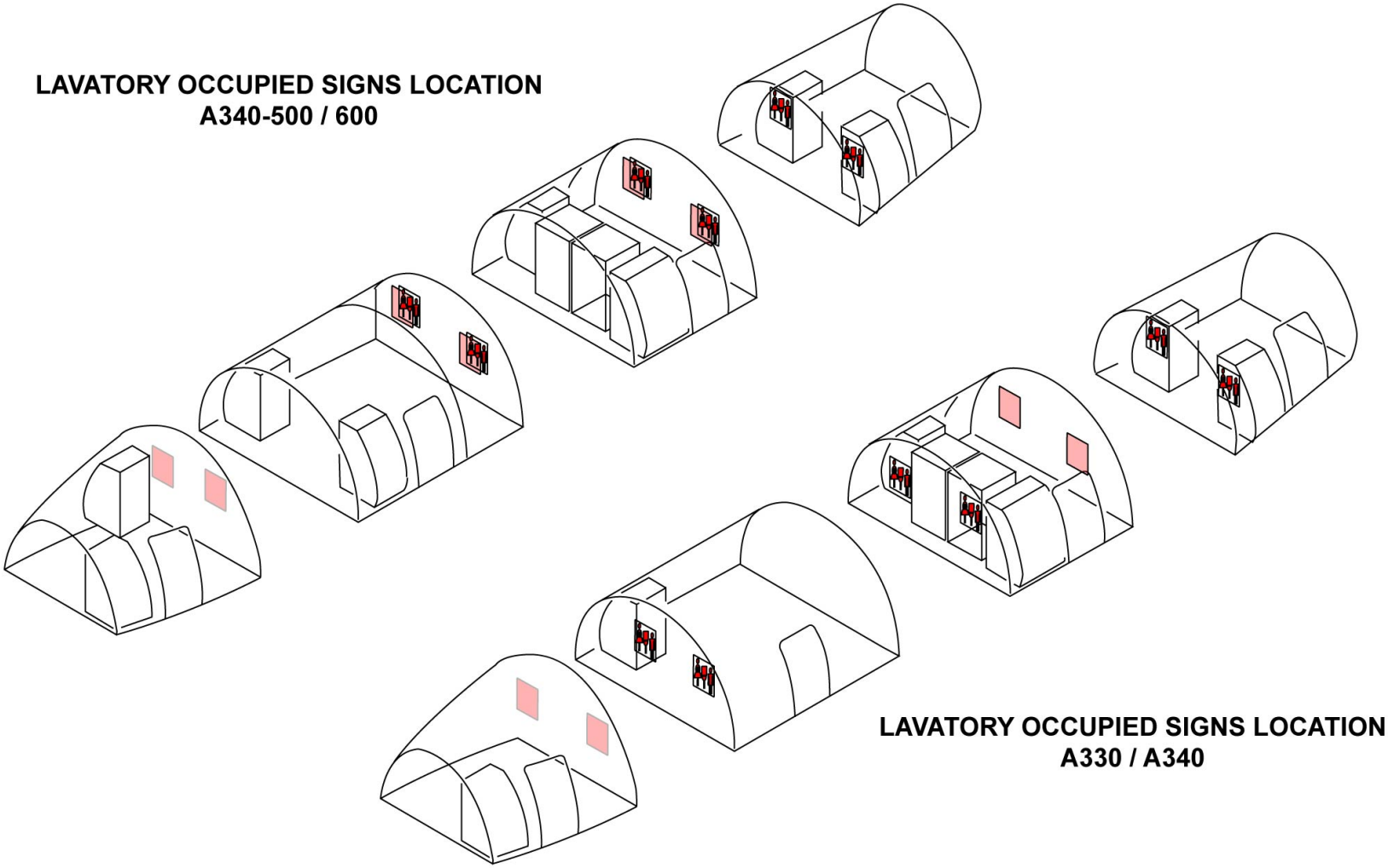

LAVATORY LIGHTING

G7508471 - G3NT1T0 - FM33D200000002

CABIN LIGHTS D/O (3)

LAVATORY LIGHTING (continued)

GENERAL

The FAP light page controls the whole cabin lavatory lighting through the CIDS.

G7508471 - G3NT1T0 - FM33D200000002

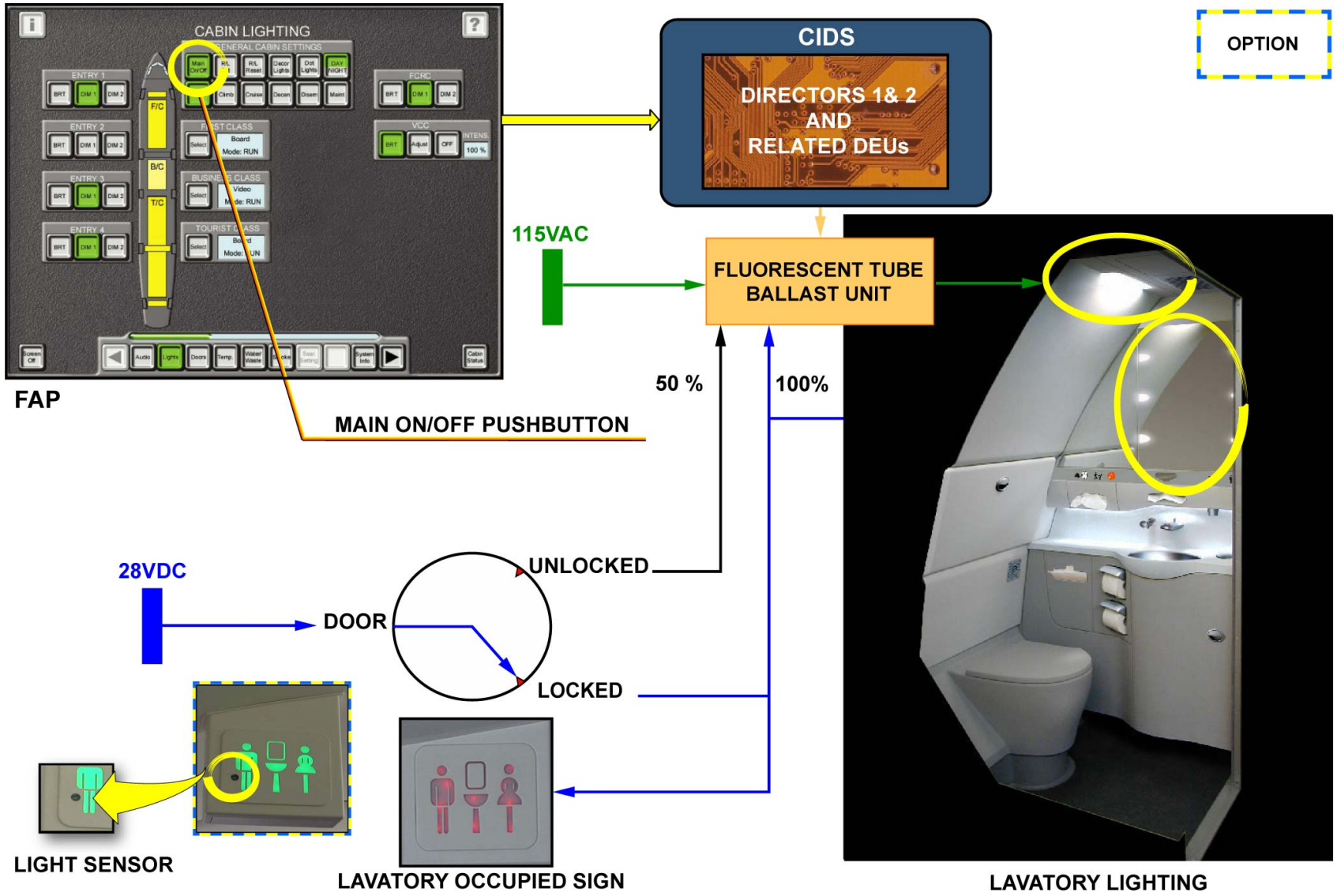

LAVATORY LIGHTING - GENERAL

CABIN LIGHTS D/O (3)

LAVATORY LIGHTING (continued)

DESCRIPTION

The lavatories illumination is controlled through the FAP via the CIDS either with the MAIN ON/OFF pushbutton or with the LAV MAINT pushbutton.

Each lavatory is provided with one or two fluorescent tubes associated to their ballast units, and with a lavatory light composed of an auxiliary light, a mirror light and a kick strip light.

Depending on the lavatory location, the fluorescent tube ballast unit system is supplied with 115VAC/400Hz by the normal busbar 113XP or 214XP.

The mirror light, the strip light and the control of the ballast unit are supplied by the GROUND/SERVICE busbar 602PP. The auxiliary light is supplied by the essential busbar 101PP: it remains lighted as long as the essential busbar is available.

Each lavatory door controls a set of two relays through the door-locking device. A door micro-switch manages the lighting brightness and occupied sign (LED Technology). The OPEN/CLOSED door switch runs the ballast unit.

G7508471 - G3NT1T0 - FM33D200000002

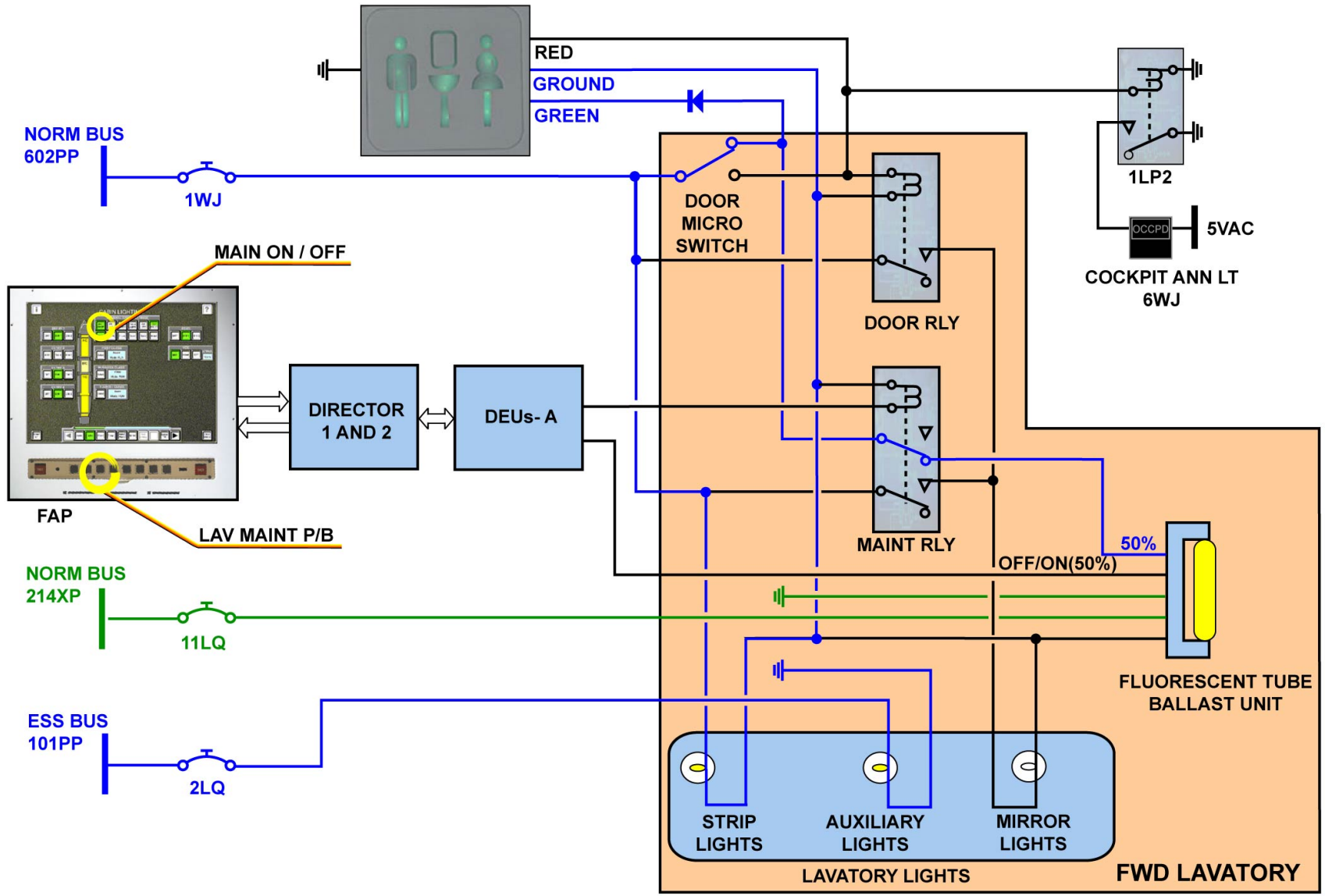

LAVATORY LIGHTING - DESCRIPTION

G7508471 - G3NT1T0 - FM33D200000002

CABIN LIGHTS D/O (3)

LAVATORY LIGHTING (continued)

OPERATION

When the lavatory door is closed but unlocked, the normal busbar 602PP energizes the fluorescent tube to 50% via the maintenance relay. In the cabin, the lavatory sign turns green.
As soon as the door is closed and locked, the normal busbar 602PP energizes the mirror light fluorescent tube to 100% via the door relay. In the cabin, the lavatory sign in the cabin turns red. Note that when the forward lavatory is occupied, the relay 1LP2 is energized. It lights the OCCUPIED annunciator on the cockpit overhead panel.
When the lavatory door is open, the fluorescent tube is energized to 50%. In the cabin, the lavatory sign turns green. Whatever the door position, the normal busbar 602PP energizes the kick strip light and the essential busbar 101PP supplies the auxiliary lights.

G7508471 - G3NT1T0 - FM33D200000002

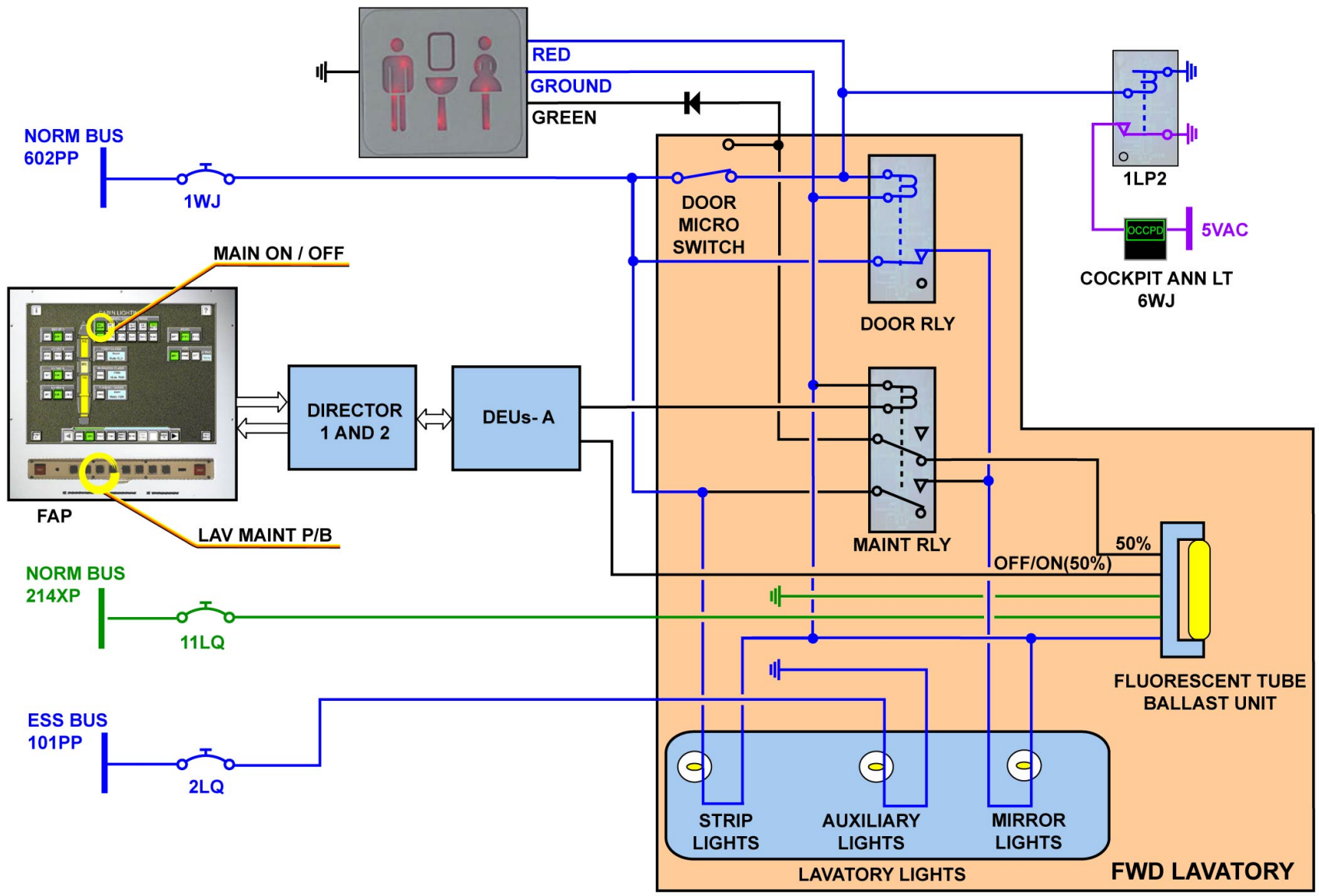

LAVATORY LIGHTING - OPERATION

G7508471 - G3NT1T0 - FM33D200000002

CABIN LIGHTS D/O (3)

PASSENGER READING LIGHTS

The passenger reading lights (LEDs) are located in the Passenger Service Unit (PSU). They are adjustable for each seat.

GENERAL

A set of LED lights are used as reading lights and are mainly controlled by a pushbutton on the armrest.

G7508471 - G3NT1T0 - FM33D200000002

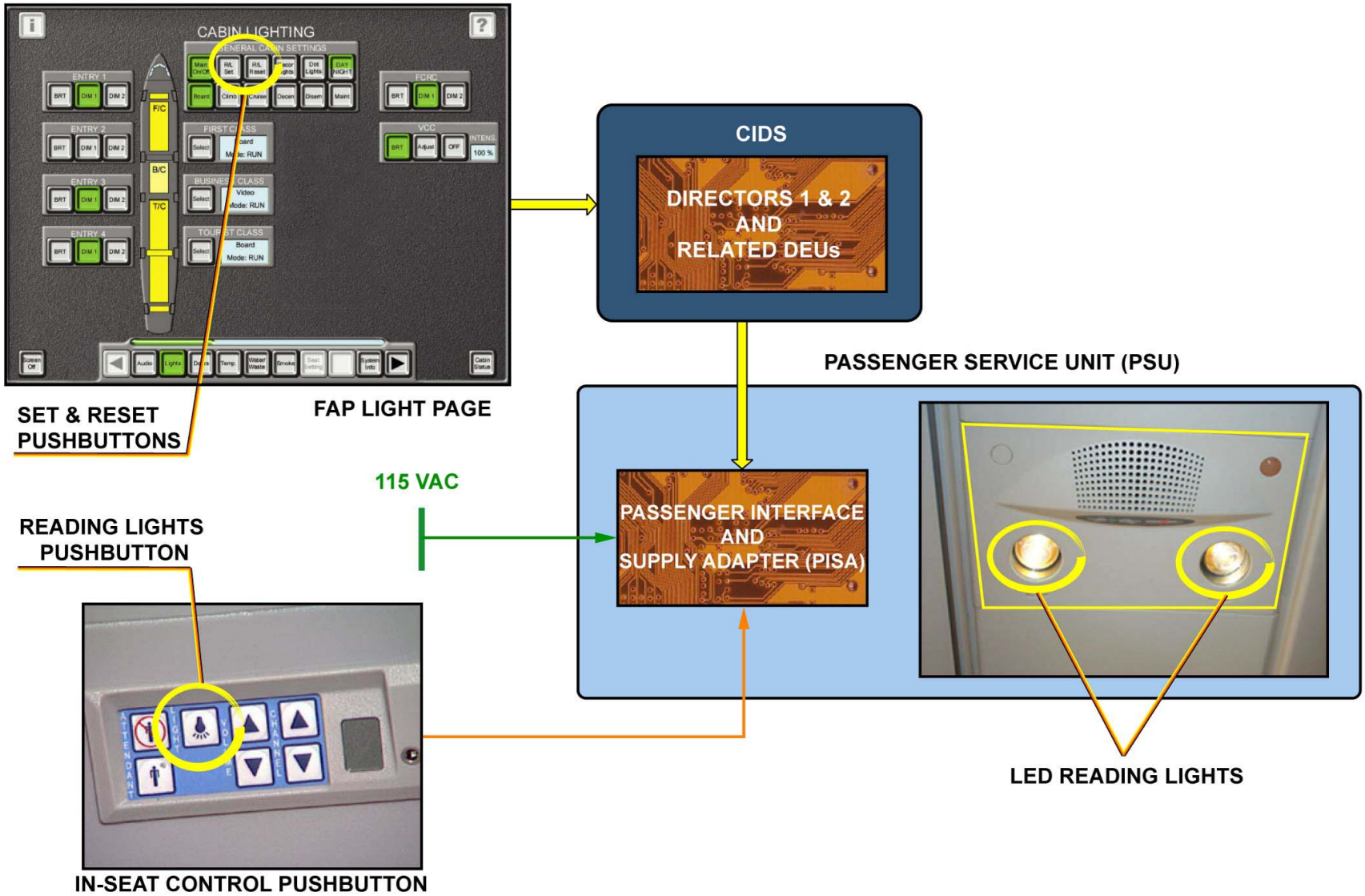

PASSENGER READING LIGHTS - GENERAL

CABIN LIGHTS D/O (3)

PASSENGER READING LIGHTS (continued)

DESCRIPTION

The passenger reading lights consist of LED technology lights, controlled either by a pushbutton located on the PSU or by a Passenger Control Unit (PCU) pushbutton located on the armrest. The FAP and an internal logic in the CIDS Directors control the Reading Lights (RL).
The cabin crew working lights are of the halogen type. Each cabin crew reading light is directly controlled by a local pushbutton.

G7508471 - G3NT1T0 - FM33D200000002

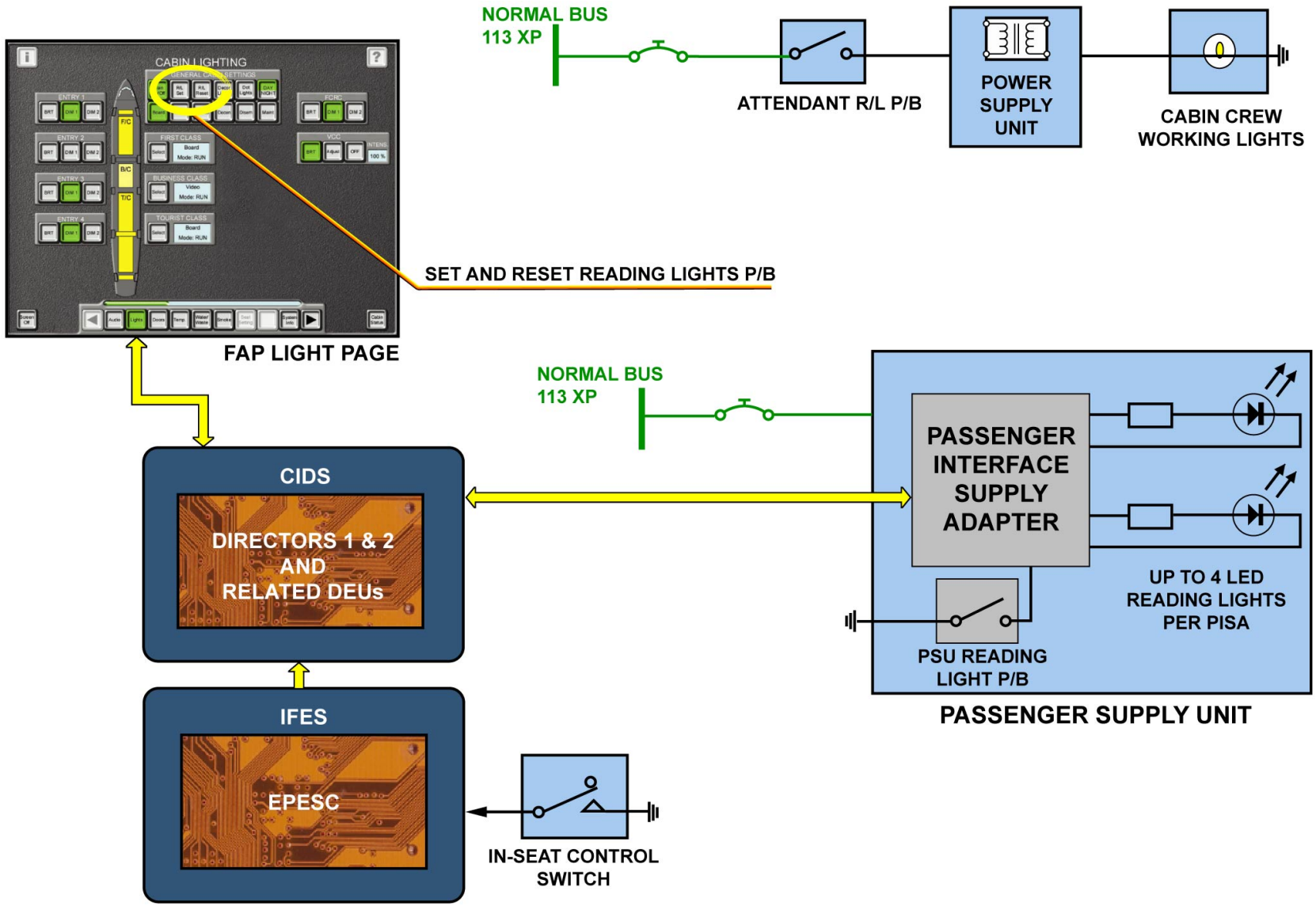

PASSENGER READING LIGHTS - DESCRIPTION

G7508471 - G3NT1T0 - FM33D200000002

CABIN LIGHTS D/O (3)

PASSENGER READING LIGHTS (continued)

OPERATION

When the reading light is set to ON or OFF, the signal is sent directly to the Passenger and Interface Supply Adapter (PISA). An internal transformer rectifier converts the voltage from the 115 VAC normal busbar into 28VDC.

Upon activation of the In-Seat control switch, an ARINC 429 signal is sent from the Enhanced Passenger Entertainment System Controller (EPESC) to the Directors. As a result, the Director transmits the signal through the Top Line Data Bus to the DEU-A. Finally, it is relayed to the PISA power supply via a bi-directional serial interface of the Low Voltage Differential Signaling (LVDS) type. The brightness of the passenger reading lights is in correlation to the selected cabin lighting scenario: it depends on the brightness level of the cabin general illumination.

The FAP Reading Light Set and Reset pushbuttons enable the manual control of all cabin reading lights, when the aircraft is on ground. To achieve this ground logic control, the Landing Gear Control and Interface Unit (LGCIU) sends the down and compressed landing gear signal to the Directors. Upon power application, the reading light individual operation does not depend on the aircraft being on ground or in flight.

Each light is associated to a power supply unit fitted with an internal 115VAC/6VAC transformer. The AC NORMAL BUS 113XP supplies each power supply unit. Each power unit is located in the door.

G7508471 - G3NT1T0 - FM33D200000002

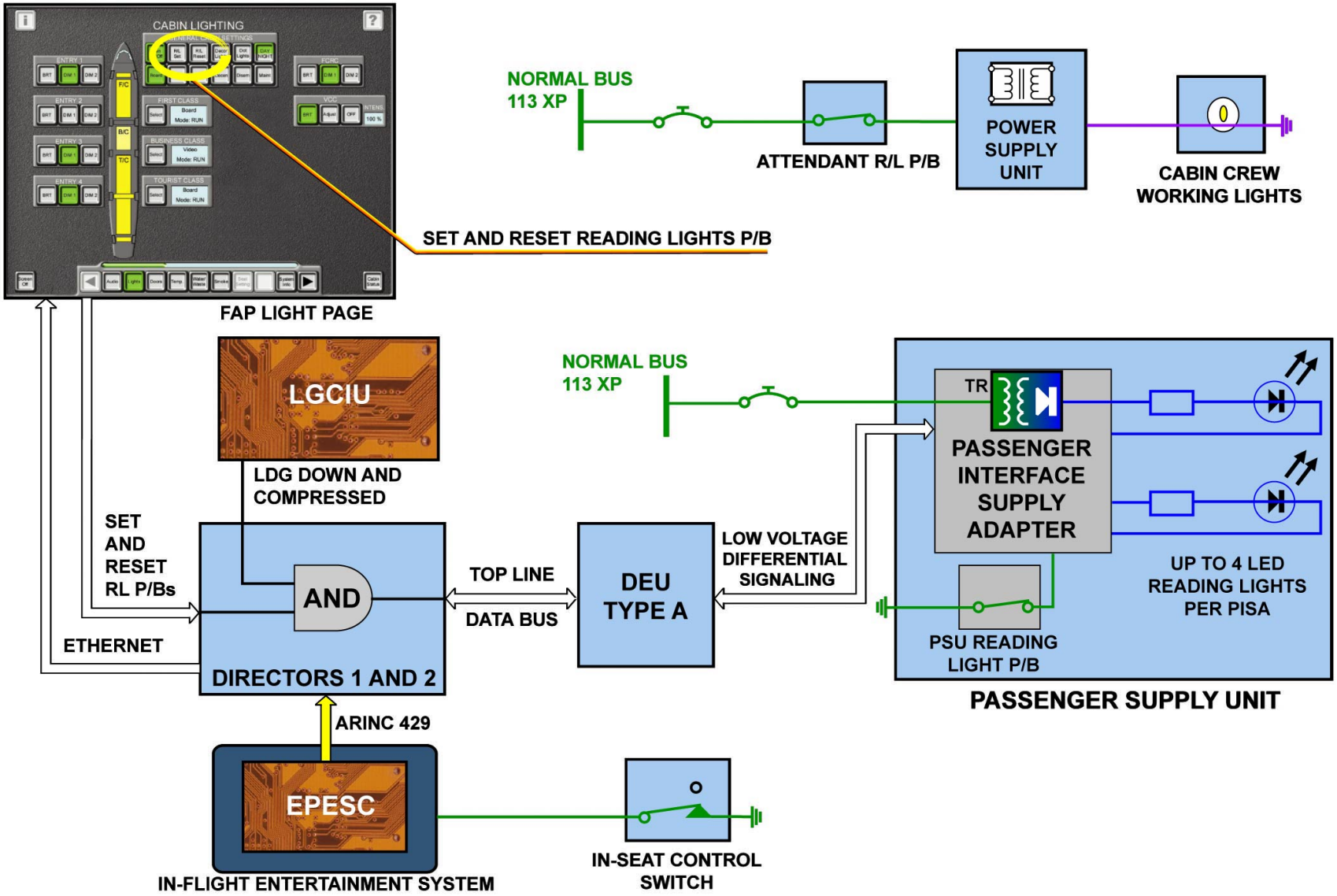

PASSENGER READING LIGHTS - OPERATION

G7508471 - G3NT1T0 - FM33D200000002

EXTERIOR LIGHTS D/O (3)

GENERAL

All the C/Bs for the exterior lighting system are installed on a C/B panel in the avionics compartment.

G7508471 - G3NT1T0 - FM33D3F33AT0102

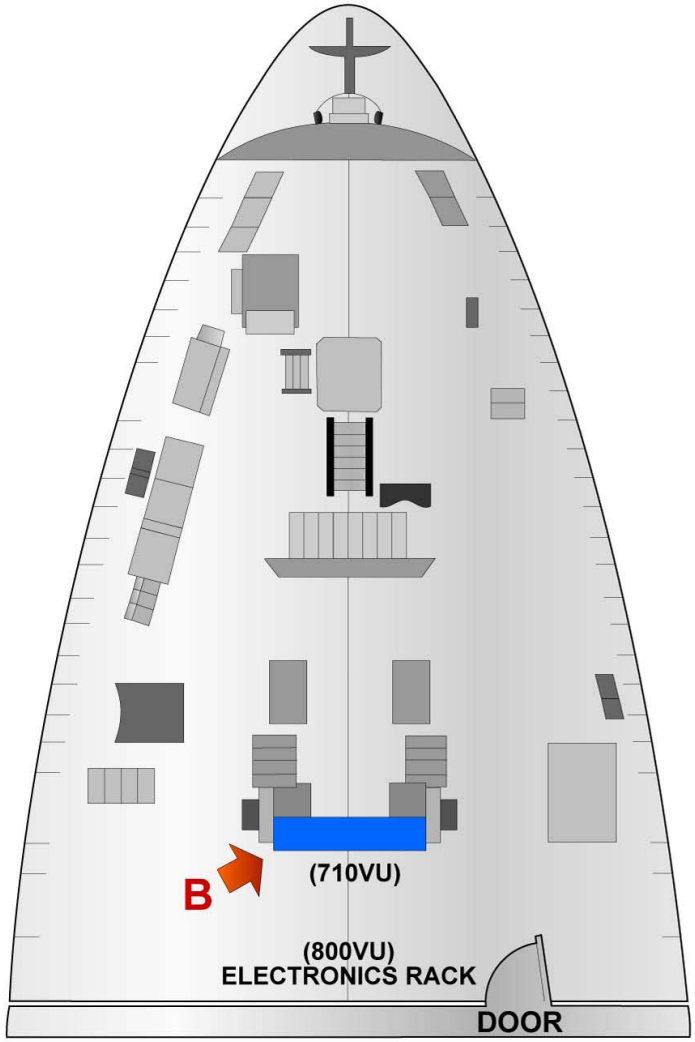

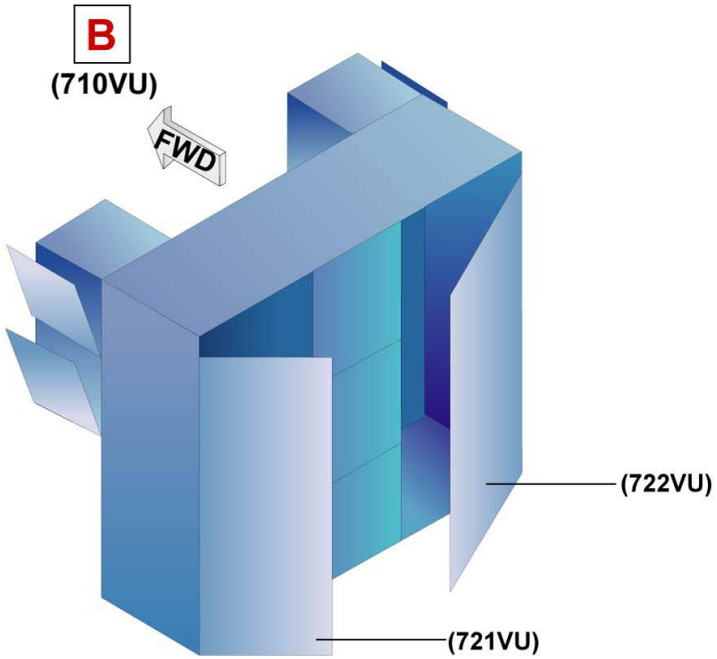

GENERAL

G7508471 - G3NT1T0 - FM33D3F33AT0102

EXTERIOR LIGHTS D/O (3)

NAVIGATION LIGHTS

There are two sets of navigation lights (wing tips and tail cone). These two sets are controlled with a three-position NAV & LOGO switch in the cockpit. Each wing tip is composed of two low voltage quartz lamps (50w), and two low voltage quartz lamps for the tail cone (25w). An integrated step-down transformer for the wing tips, and an external step-down transformer for the tail cone, are associated to each lamp.

G7508471 - G3NT1T0 - FM33D3F33AT0102

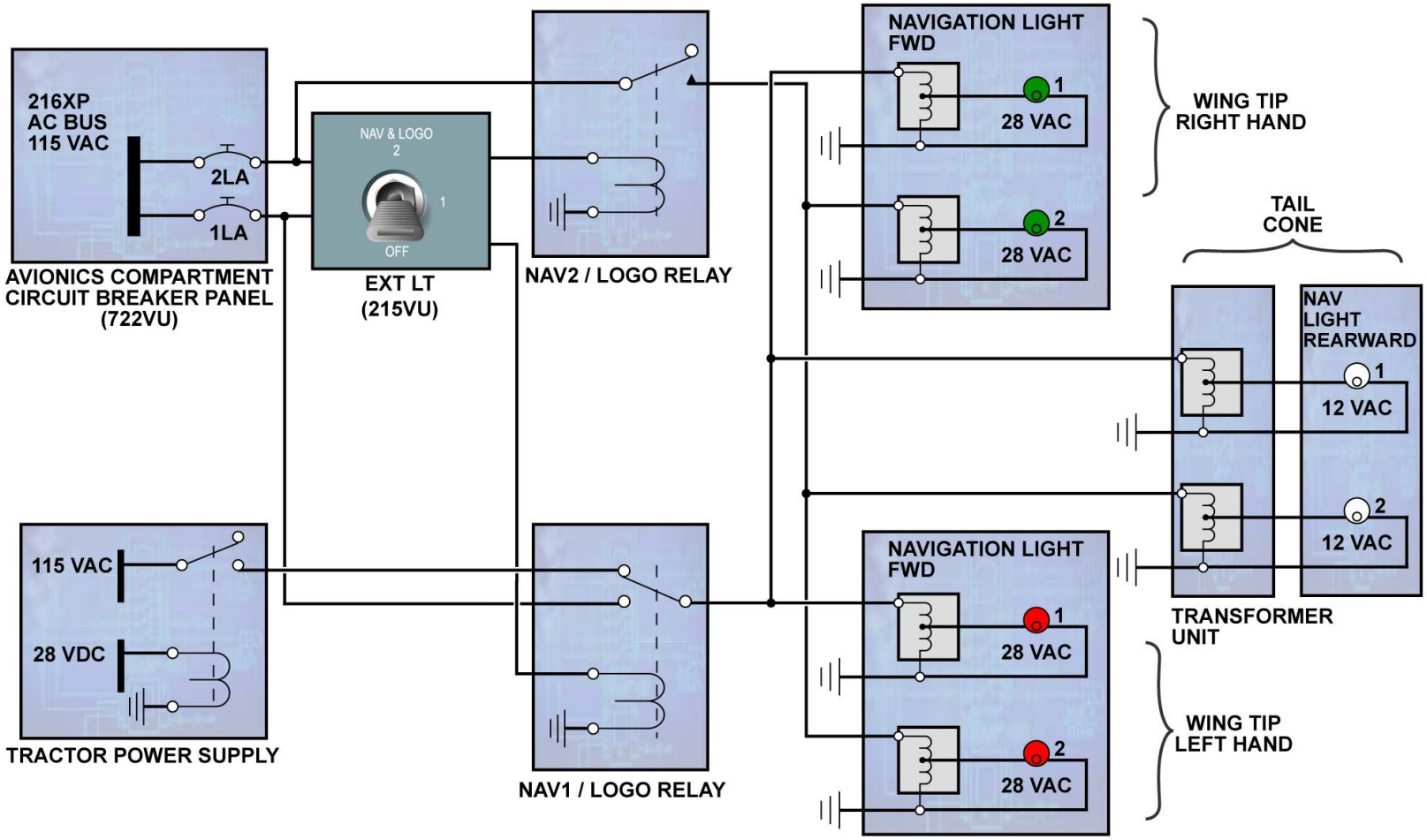

NAVIGATION LIGHTS

G7508471 - G3NT1T0 - FM33D3F33AT0102

EXTERIOR LIGHTS D/O (3)

LANDING LIGHTS

Each landing light contains a halogen sealed-beam lamp (600w), with an integrated step-down transformer.

G7508471 - G3NT1T0 - FM33D3F33AT0102

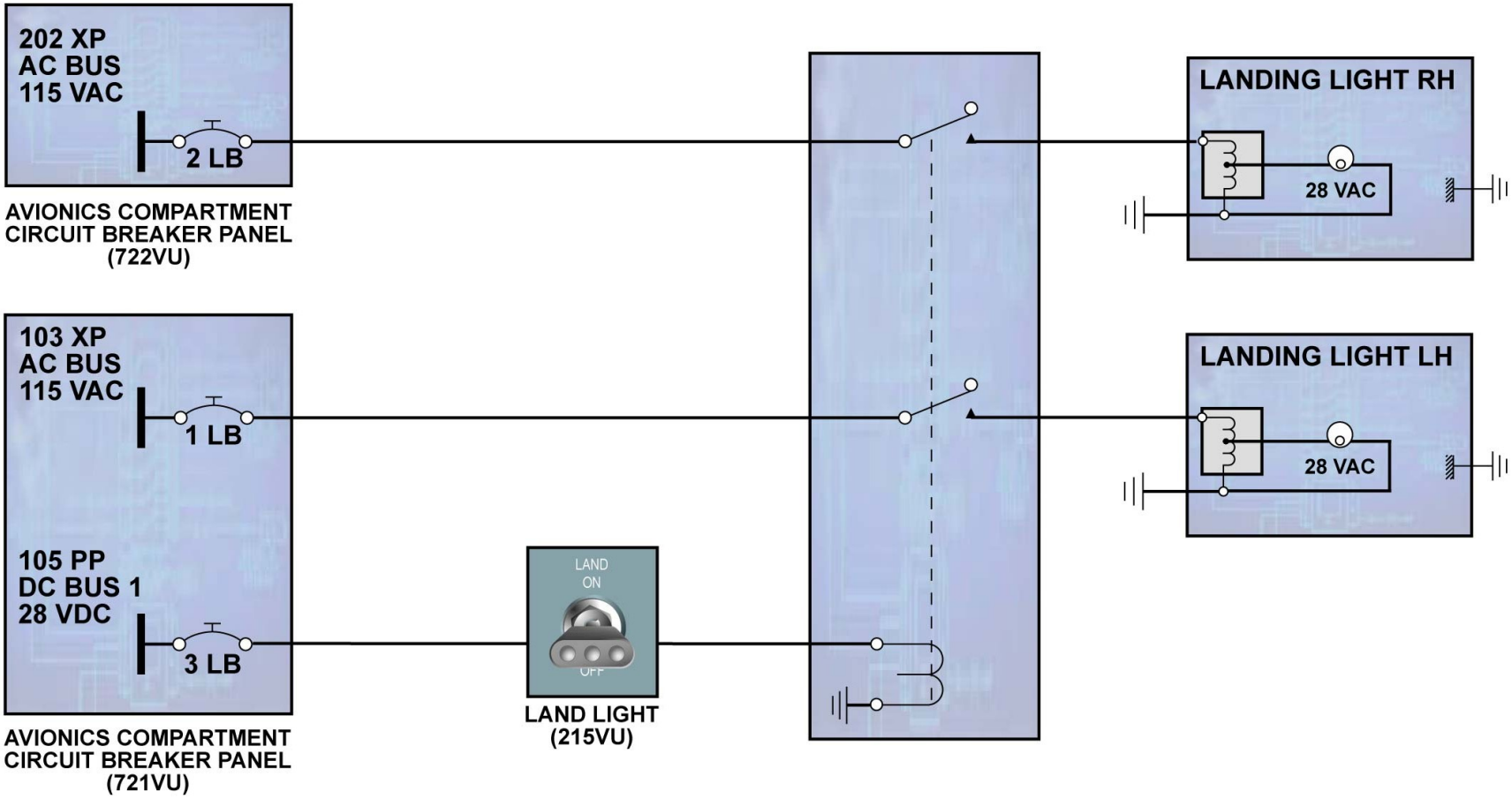

LANDING LIGHTS

G7508471 - G3NT1T0 - FM33D3F33AT0102

EXTERIOR LIGHTS D/O (3)

RUNWAY TURN OFF LIGHTS

Each runway turn off light unit has a light-alloy housing, which contains a sealed-beam lamp unit with a 150w single filament lamp, associated to their step-down transformer. The light unit has an angle of 45 degrees to the A/C centerline. When the L/G is extended and down locked, Landing Gear Control and Interface Units (LGCIUs) 1 and 2 provide a ground signal to the relay.

G7508471 - G3NT1T0 - FM33D3F33AT0102

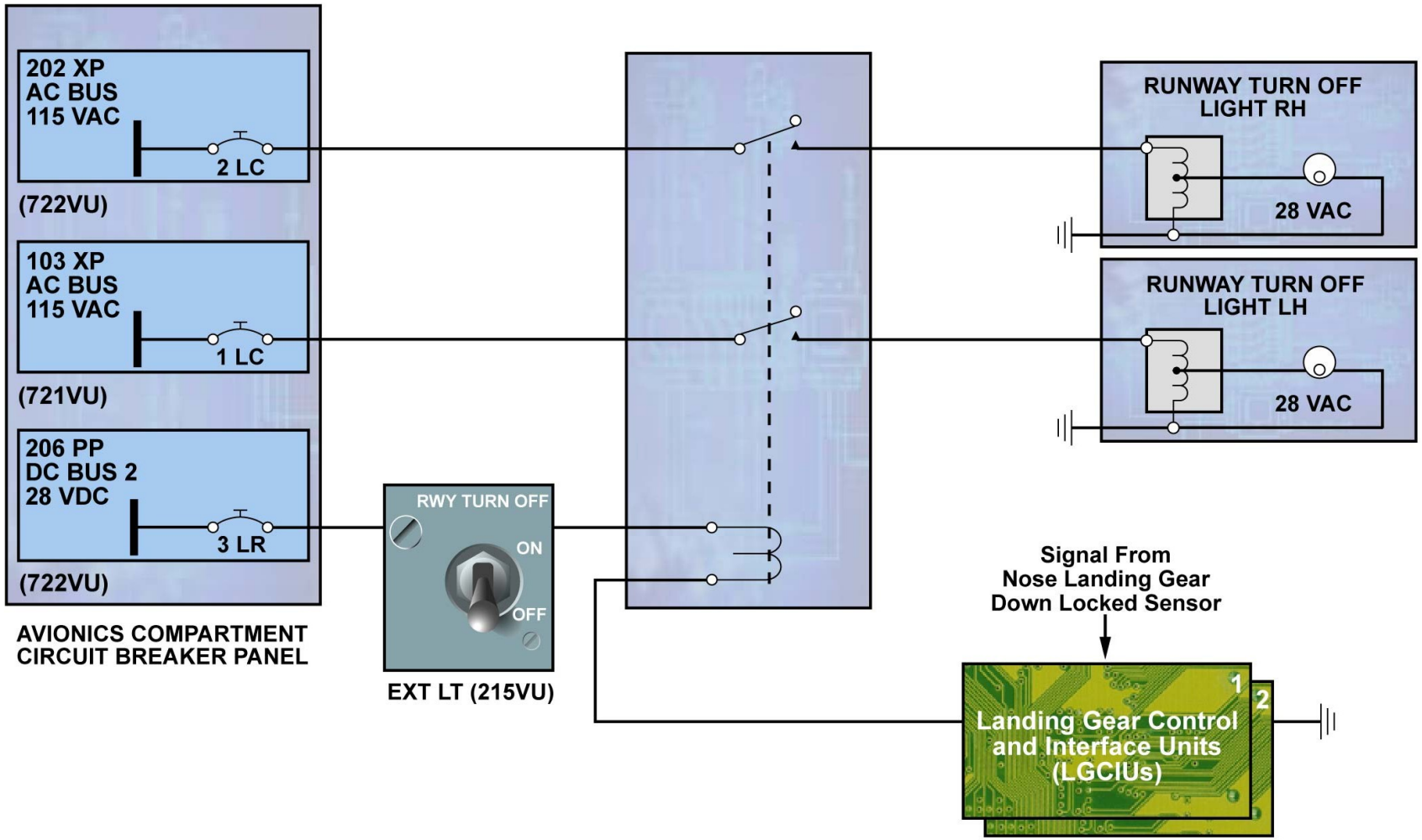

RUNWAY TURN OFF LIGHTS

G7508471 - G3NT1T0 - FM33D3F33AT0102

EXTERIOR LIGHTS D/O (3)

TAXI AND TAKE OFF LIGHTS

The taxi and take off lights have two double-filament (400 and 600 Watt) sealed-beam lamps. There is one step-down transformer for each filament. They are controlled by the NOSE switch. In the OFF position, all lights are off, in the TAXI position, the 400 Watt filaments are energized and in the TO position, all filaments are powered. When the L/G is extended and down locked, LGCIUs 1 and 2 provide a ground signal to the relays.

G7508471 - G3NT1T0 - FM33D3F33AT0102

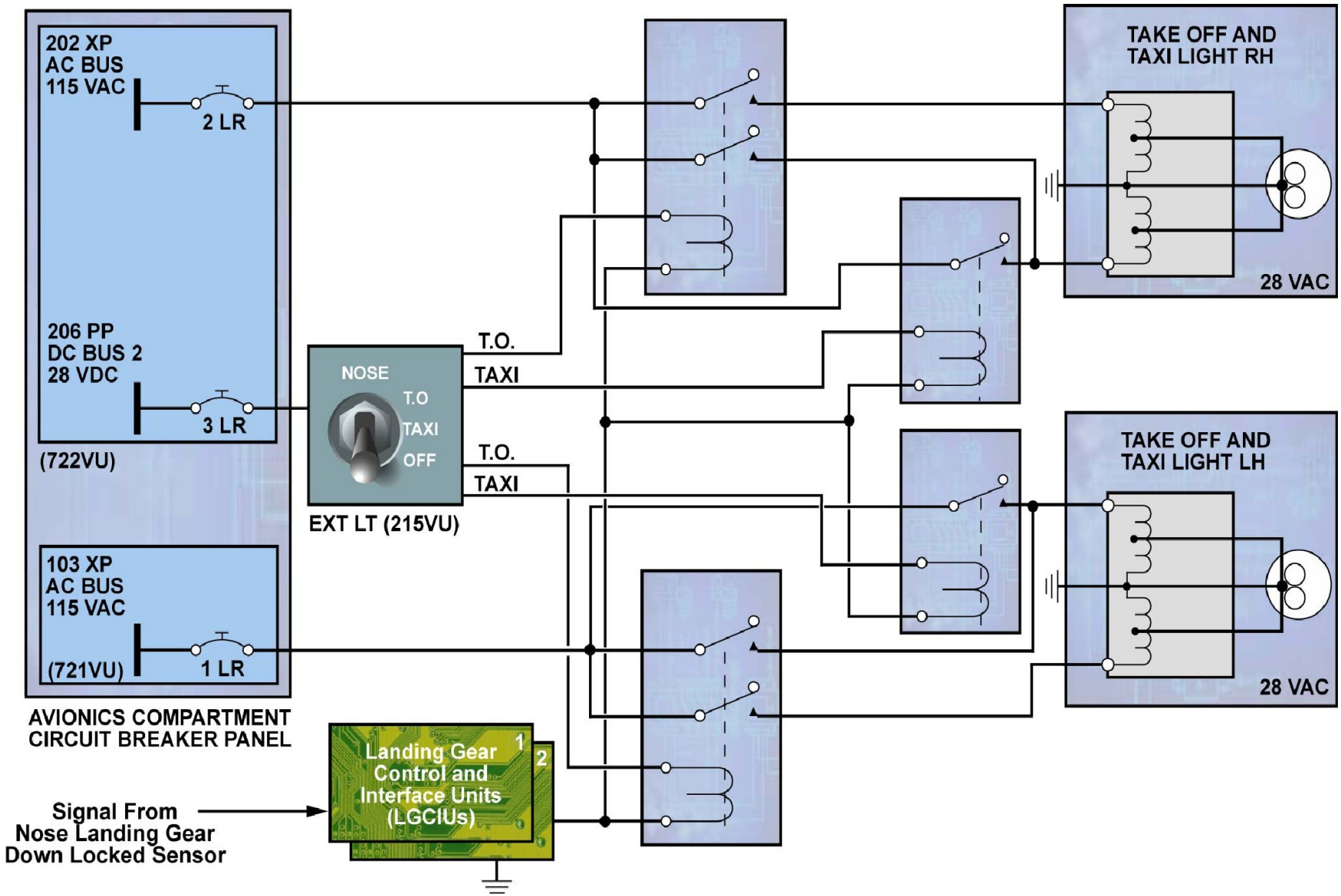

TAXI AND TAKE OFF LIGHTS

G7508471 - G3NT1T0 - FM33D3F33AT0102

EXTERIOR LIGHTS D/O (3)

LOGO LIGHTS

Each LOGO light consists of a housing, which contains the lamp assembly and an autotransformer. The LOGO lights come on automatically, when the NAV & LOGO switch is in position 1 or 2 during these phases:
- taxiing,
- take-off,
- landing.

Slat Flap Control Computers (SFCCs) 1 and 2 provide a ground signal when the flaps are lowered to 15 degrees or more.
LGCIU 2 provides a ground signal when the L/G struts are compressed.

G7508471 - G3NT1T0 - FM33D3F33AT0102

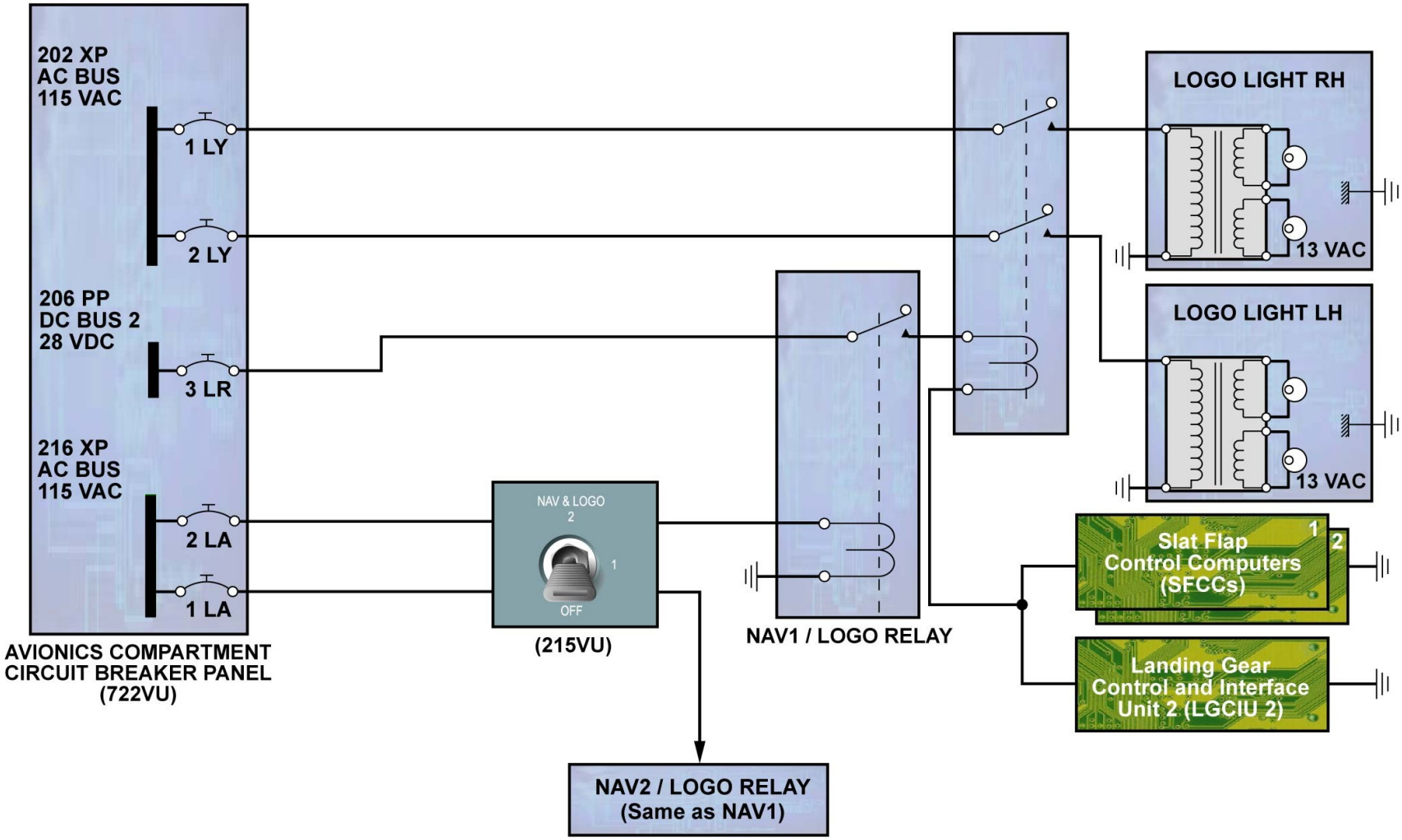

LOGO LIGHTS

G7508471 - G3NT1T0 - FM33D3F33AT0102

EXTERIOR LIGHTS D/O (3)

BEACON LIGHTS

The anti-collision light system consists of two beacon lights, which are xenon flash tubes, manually switched on and off from the BEACON ON/OFF switch in the cockpit. They are controlled through their related power units. The beacon lights provide a high intensity red flashing light at a rate of 60 +/- 10 flashes per minute. Both lights give 360 degrees of horizontal and 75 degrees of vertical diffusion.

G7508471 - G3NT1T0 - FM33D3F33AT0102

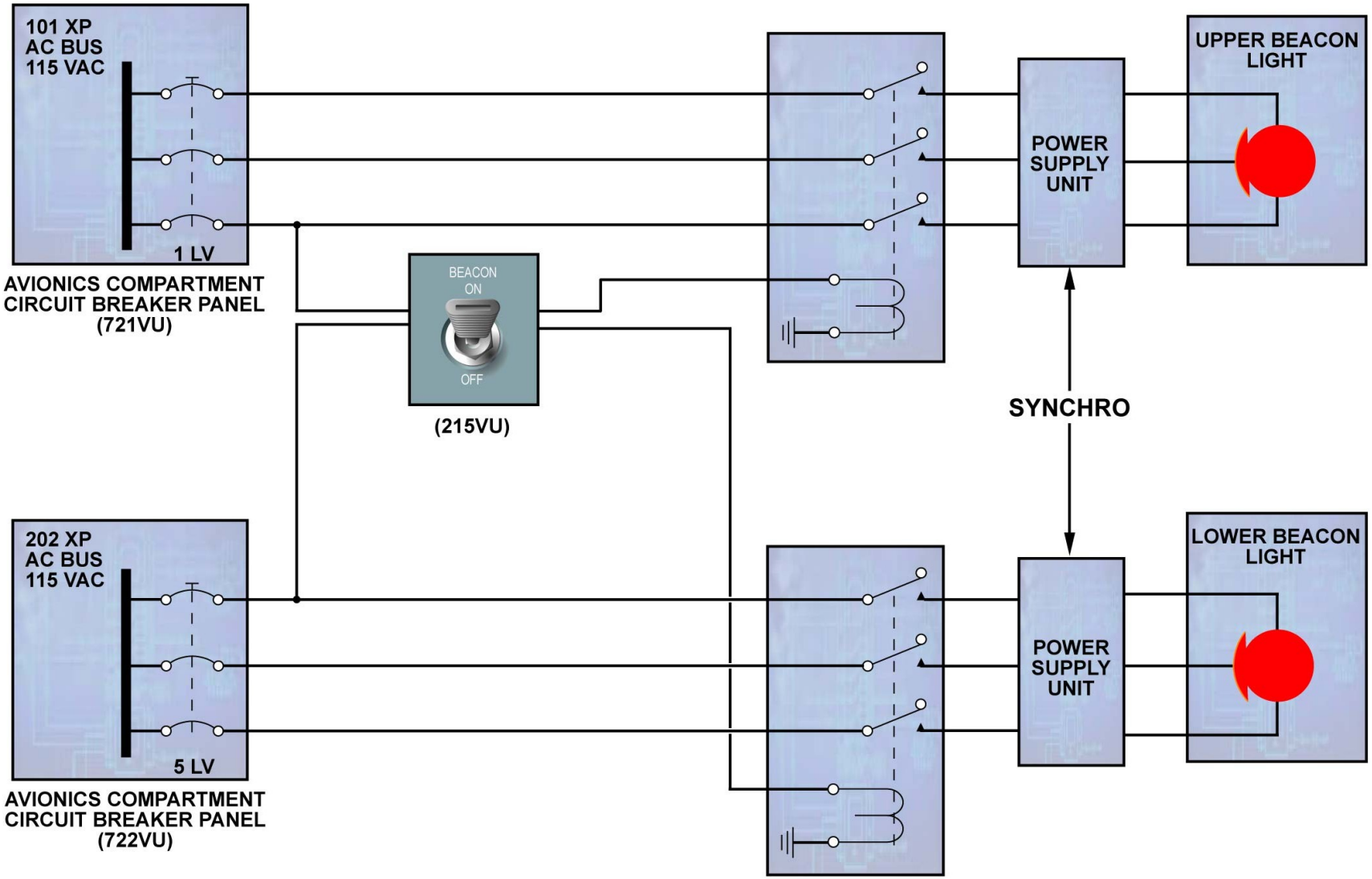

BEACON LIGHTS

G7508471 - G3NT1T0 - FM33D3F33AT0102

EXTERIOR LIGHTS D/O (3)

STROBE LIGHTS

The strobe lights consist of three strobe modes (wings, tail cone), which are xenon flash tubes. The strobe lights are switched on and off from the STROBE ON/AUTO/OFF switch in the cockpit:
- ON: Strobe lights flash white.
- AUTO: Strobe Lights are automatically switched on when the shock absorber is not compressed,
- OFF: All lights go off.

They are controlled through their related power supply units. A ground signal from LGCIU 2 is sent to the relay when the MLG struts are compressed. The two flash tubes per wing produce 120 +/- flashes per minute, in the FWD facing strobe light (120-degree horizontal and 150-degree vertical diffusion), and the flash tube in the tail cone produces 60 +/- flashes per minute in the rearward direction (140-degree horizontal and 150-degree vertical diffusion).

NOTE: Note: the power supply unit for the tail cone strobe light is located on the rear wall of the THS compartment.

G7508471 - G3NT1T0 - FM33D3F33AT0102

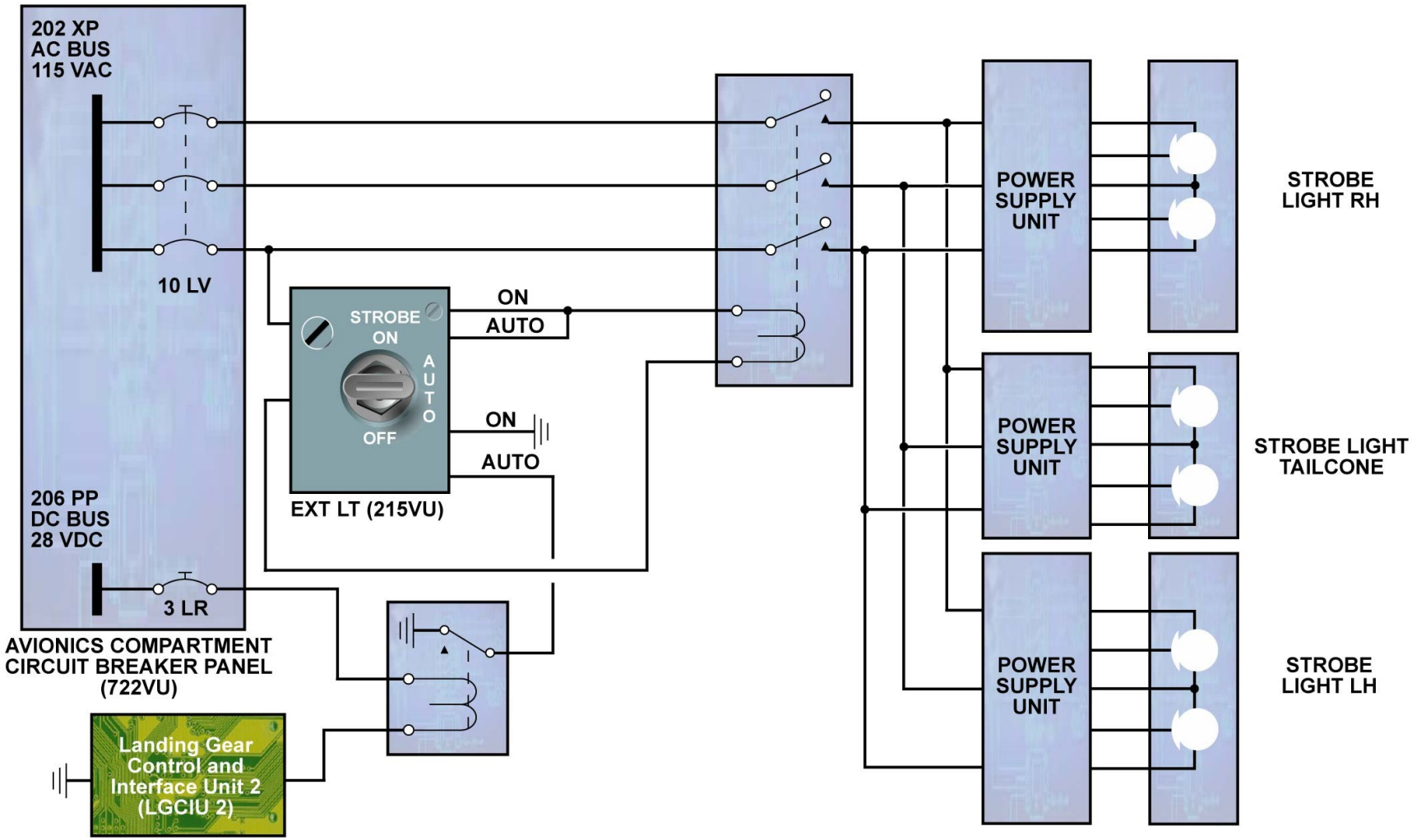

STROBE LIGHTS

G7508471 - G3NT1T0 - FM33D3F33AT0102

EXTERIOR LIGHTS D/O (3)

WING AND ENGINE SCAN LIGHTS

The wing and engine scan lights can be switched ON, on ground for maintenance purposes, for a maximum of two hours of continuous operation. When the RH or LH mid passenger doors is open, the corresponding engine scan lights do not operate to avoid door contact with the light hot beam. This is performed by the door proximity switch.

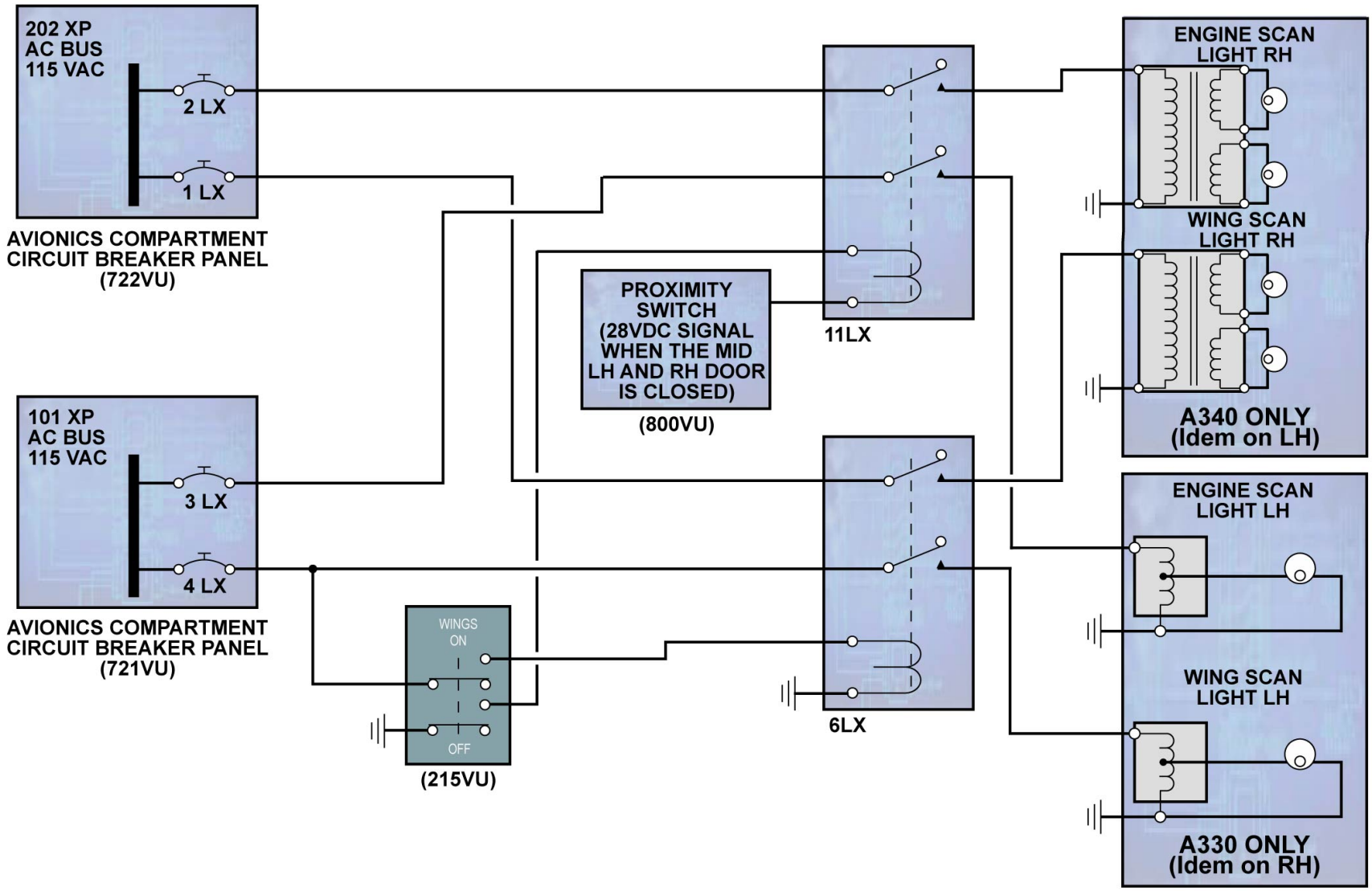

WING AND ENGINE SCAN LIGHTS

G7508471 - G3NT1T0 - FM33D3F33AT0102

EMERGENCY LIGHTS D/O

GENERAL

The cabin emergency light system is made of:
- the Emergency Power Supply Units (EPSUs),
- the ceiling emergency lights,
- the exits marking signs,
- the exits location signs,
- a Floor Proximity Emergency Escape Path Marking System (FPEEPMS),
- integrated lights in each door escape slide,
- the overwing emergency-exit lights on the A340-600 only,
- the emergency lights in the Flight Crew Rest Compartment (FCRC) and in the Bulk Crew Rest Compartment (BCRC) if installed.
- The Photo luminescent floor proximity Escape Path Marking System can be install (Option)

SYSTEM DESCRIPTION

EPSU

The EPSUs control and monitor the emergency lighting system. They are installed in the ceiling of the passenger compartment. To operate the different emergency lights during usual conditions, each EPSU converts 28V DC to 6V DC and 6V DC to 115V AC. If power from the DC essential busbar is not available, the battery pack, installed in each EPSU, gives power to all the emergency lights. The batteries give sufficient power to the lights for a minimum of 10 minutes.

CEILING EMERGENCY LIGHTS

The ceiling emergency lights are installed to give sufficient lighting in an emergency condition. The lights are installed in the ceiling panels of the aisles, cross-aisles and exit areas. The lights are supplied from the converters or the battery packs of the EPSUs.

NOTE: The ceiling emergency lights are Light Emitting Diodes (LEDs), called Ceiling LED Lights (CELLI), and can also be used as night lights on the A340-500 and A340-600 aircraft.

EXITS SIGNS

T here are two different types of overhead exit sign installed in the cabin:
- exit marking signs,
- exit location signs.

The exit marking signs, installed above each passenger/crew door, indicate the position of the exits. The exit location signs installed in the aisles indicate the position of the exit areas.

NOTE: The exit marking signs and exit location signs are LEDs, called Dome LED Lights (DOLLI). They are automatically switched to ON in case of an excessive cabin depressurization.

FPEEPMS

In an emergency condition it is possible that the overhead emergency lights are not sufficient. This is when smoke enters the cabin. In order to give sufficient lighting of the aisle, cross-aisles and exits in floor level height, a Floor Proximity Emergency Escape Path Marking System (FPEEPMS) is installed in the cabin. It is electrically integrated in the emergency lighting system. The FPEEPMS is different according to the A/C configuration.
Optionally, a Photo-luminescent floor proximity Escape Path Marking System can be install. The photo-luminescent stripes are charged by incident light provided by the normal passenger cabin lighting, including sunlight. When the cabin darkens, the photo-luminescent stripes "discharge" the stored energy in the form of a luminescent glow.

EMERGENCY ESCAPE SLIDE LIGHTS

The emergency lights, which are integrated in the escape slides of the passenger/crew doors, are turned on automatically when the escape slides are deployed.
For the A340-600, the offwing escape-slide system is installed at the overwing emergency-exits, and is electrically operated. Deployment of the escape-slide is automatic when the door is opened with the escape-slide control handle set in the ARMED position. The battery bus bar supplies 28V DC power to operate the electrical escape-slide release system via the Slide-Release Power-Supply Unit (SRPSU).

NOTE: The SRPSU and its related slide are only installed on the A340-600.

TEST

Two tests of the cabin emergency lighting system must be carried out from the MCDU through the Cabin Intercommunication Data System (CIDS):
- the system test,
- the BATtery CAPacity test.

The system test checks the condition of the EPSUs electronic circuits and the interior and exterior electrical loads of the cabin emergency-lighting system. The BAT CAP test checks and shows the battery capacity condition of each of the EPSUs batteries. An individual test on each EPSU must be carried out if the CIDS fails. A test switch is installed on the top of each EPSU.
A load programming procedure is automatically done when a new EPSU battery is installed or when a new EPSU is installed. This procedure, also called "TEACH IN", is necessary to measure and keep the load values of the related EPSU. These load values are used as reference values during the system test. Therefore it is necessary to examine that all connected emergency lights of the related EPSU operate.

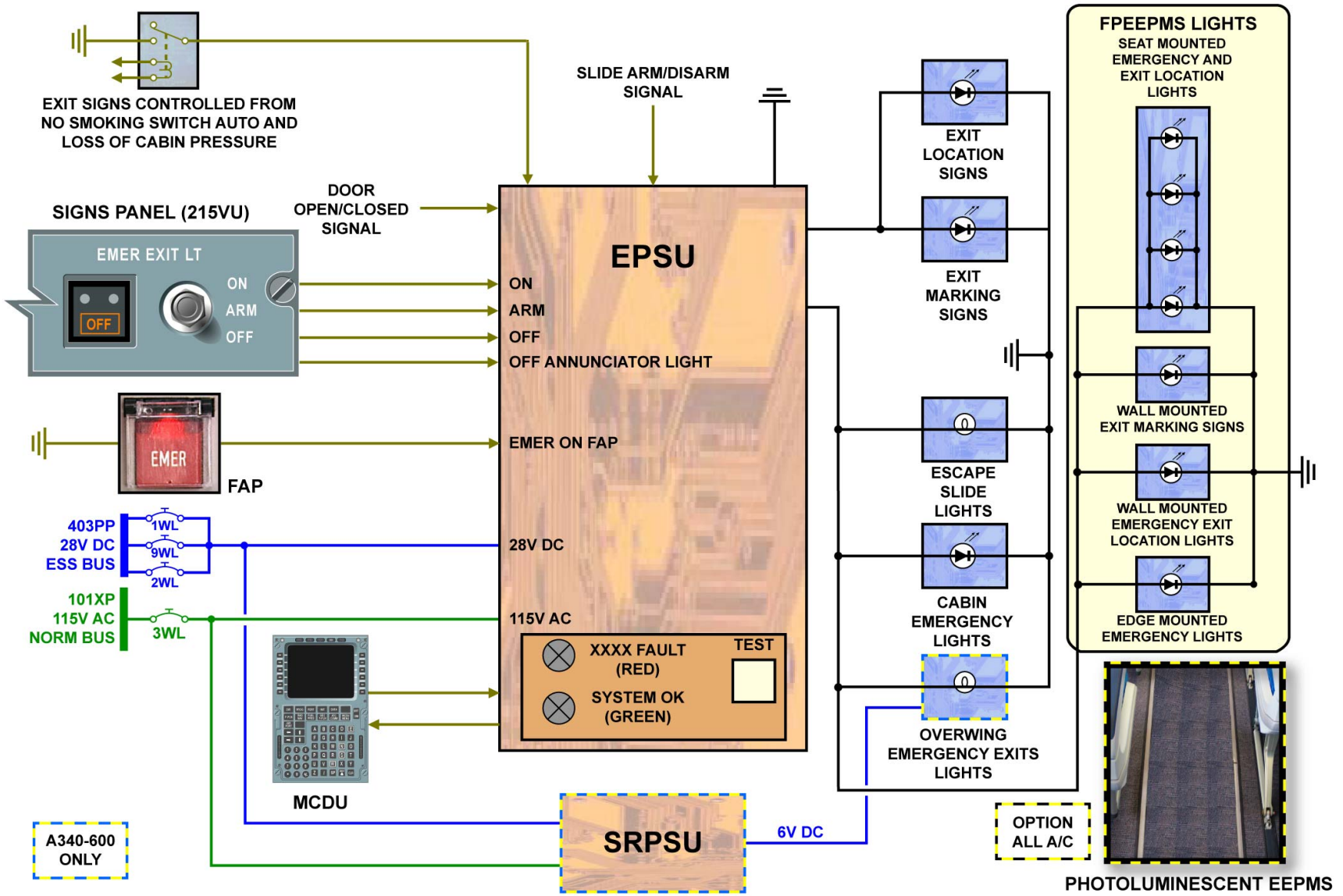

GENERAL ... TEST

G7508471 - G3NT1T0 - FM33D400000001

This Page Intentionally Left Blank

G7508471 - G3NT1T0 - FM33D4000000001

EMERGENCY LIGHTS D/O

SYSTEM OPERATION

The cabin emergency light system is active in case of partial or total electrical failure. The EPSUs supply all the emergency lights, either by the internal transformer or by the integrated battery pack. The following table gives the different system configuration in case of electrical power supply failure.

G7508471 - G3NT1T0 - FM33D4000000001

SYSTEM FUNCTIONAL TABLE							
POWER SUPPLY			POSITION OF SWITCH		STATUS OF LIGHT		
PARTIAL LOSS OF NORM 115V AC (101XP-B)	TOTAL LOSS OF NORM 115V AC	LOSS OF 28V DC (403PP)	OFF/ARM/ON (COCKPIT)	EMER (CABIN)	EMER CLG LTS	EXIT SIGNS (OVHD)	FPEEPMS
YES/NO	YES/NO	YES/NO	OFF	OFF	OFF	OFF	OFF
YES	NO	NO	ARM	OFF	ON	OFF	OFF
YES	YES	NO	ARM	ON/OFF	ON	ON	ON
YES	YES	YES	ARM	ON/OFF	ON	ON	ON
YES/NO	YES/NO	NO	ON	ON/OFF	ON	ON	ON
YES/NO	YES/NO	YES	ON	ON/OFF	ON	ON	ON
YES/NO	YES/NO	NO	ON/OFF	ON	ON	ON	ON
YES/NO	YES/NO	YES	ON/OFF	ON	ON	ON	ON

SYSTEM OPERATION

LIGHTS SYSTEM BASE MAINTENANCE (3)

INTRODUCTION

This module describes one line maintenance task. This task is performed to check the battery capacity via the MCDU.

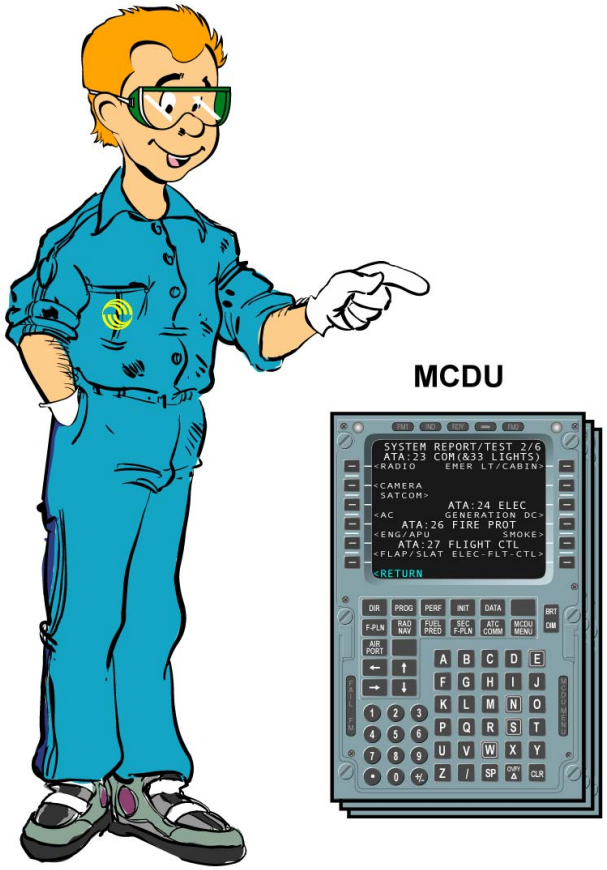

EMERGENCY POWER SUPPLY UNIT (EPSU)

INTRODUCTION

LIGHTS SYSTEM BASE MAINTENANCE (3)

ALTERNATIVE PROCEDURE TO EPSU BATTERY CAPACITY CHECK

The service information letter 33-033 provides an alternative to the EPSU battery capacity check via the MCDU. The operators may choose to replace the EPSU battery by fully charged ones in accordance with the Removable/Installation procedures from the AMM (MPD 335100-02-1). The removed EPSU batteries must go through a maintenance cycle and be stored in accordance with the vendor recommendations.

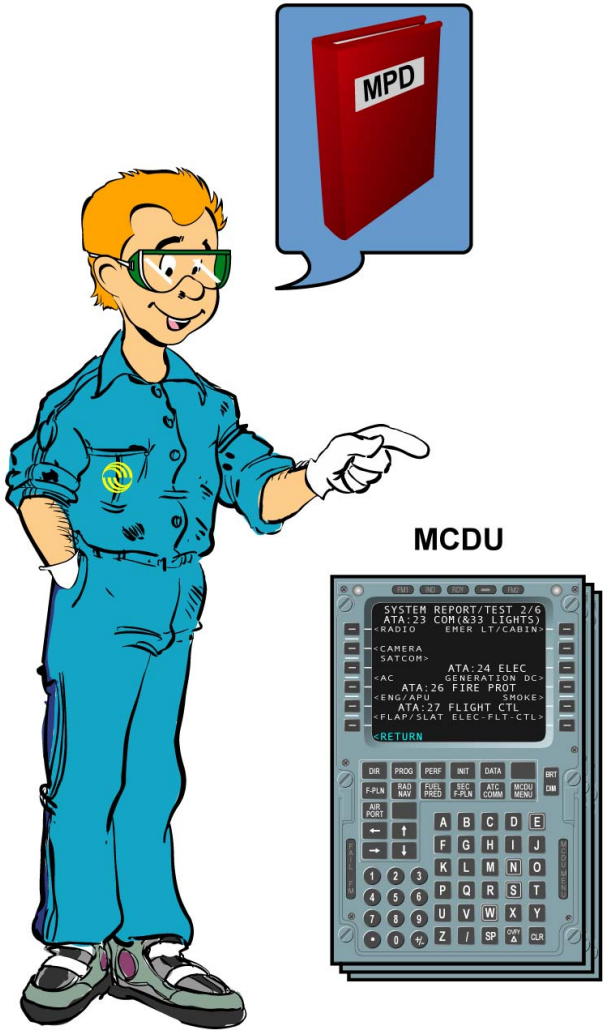

EMERGENCY POWER SUPPLY UNIT (EPSU)

ALTERNATIVE PROCEDURE TO EPSU BATTERY CAPACITY CHECK

LIGHTS SYSTEM BASE MAINTENANCE (3)

BATTERY CAPACITY CHECK VIA THE MCDU

The aim of this procedure is to discharge and charge the batteries installed in the A/C via the MCDU menus.

G7508471 - G3NT1T0 - FM33Y2BASEMCE02

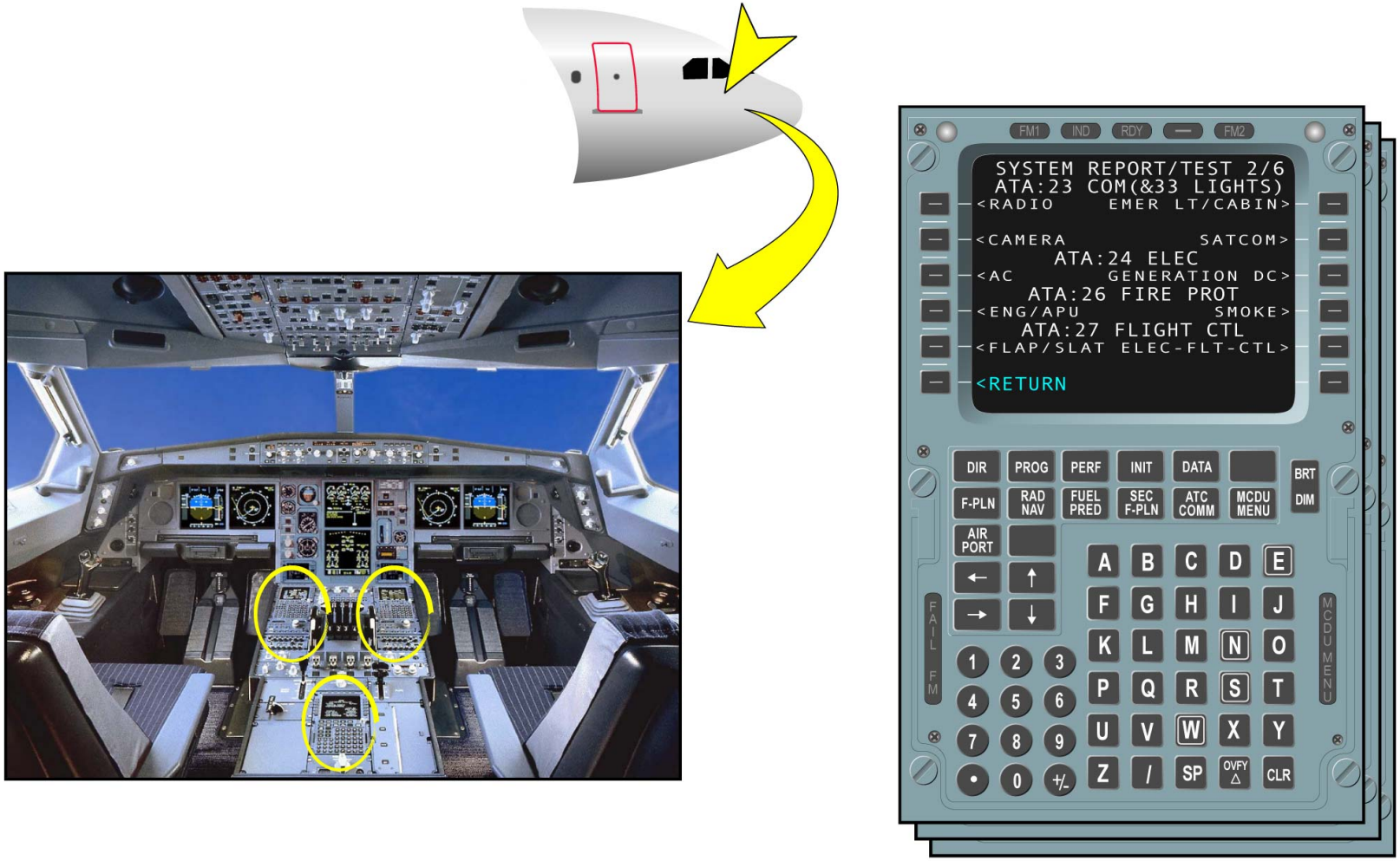

BATTERY CAPACITY CHECK VIA THE MCDU

LIGHTS SYSTEM BASE MAINTENANCE (3)

BATTERY CAPACITY CHECK VIA THE MCDU (continued)

CAUTION AND NOTES FOR THE PROCEDURE

CAUTION: The battery capacity test takes up to 3 HR. Make sure that the A/C power supply stays on during the entire test time. The batteries are discharged and charged during the test.

NOTE: In order to get the test result, the MCDU must stay in the menu page CIDS/EPSU/SRPSU BAT CAP TEST during the complete test. This is due to the fact that the test result cannot get through the menu page CIDS/EPSU/SRPSU BAT CAP TEST RESULT (CIDS fault).

NOTE: If the battery capacity test is started during high environmental temperature conditions (>45°C.), the status message "BAT OVERTEMP - END OF TEST DELAYED" is shown on the MCDU, the test is delayed. If the temperature returns to a normal day profile, the test will continue. The message on the MCDU remains for information.

Battery capacity check via the MCDU:

...
Job set-up
...
Caution and notes.
A/C maintenance configuration.
...
Procedure
...
Battery capacity check.
...
Close-up
...

IN ORDER TO GET THE TEST RESULT, THE MCDU MUST STAY IN THE MENU PAGE "CIDS/EPSU/SRPSU BAT CAP TEST" DURING THE COMPLETE TEST.

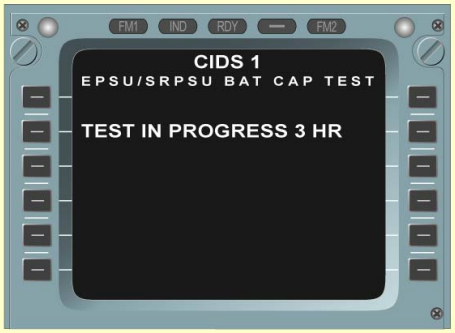

CAUTION

THE BATTERY CAPACITY TEST TAKES UP TO 3 HR. MAKE SURE THAT THE A/C POWER SUPPLY STAYS ON DURING THE ENTIRE TEST TIME. THE BATTERIES ARE DISCHARGED AND CHARGED DURING THE TEST.

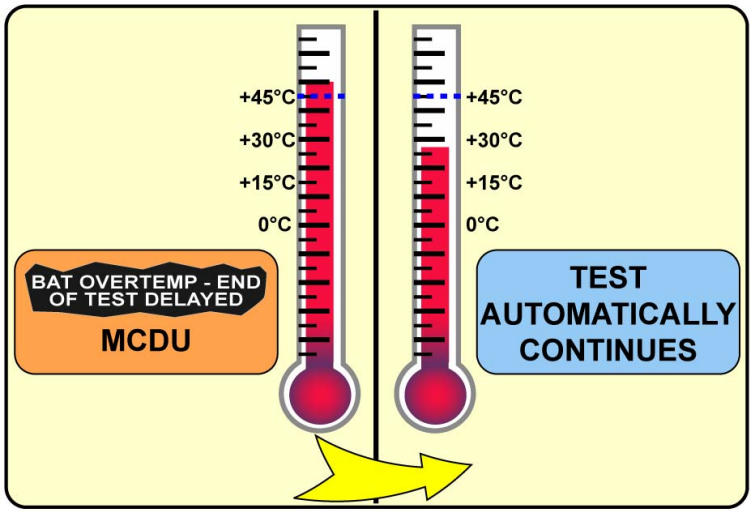

BATTERY CAPACITY CHECK VIA THE MCDU - CAUTION AND NOTES FOR THE PROCEDURE

LIGHTS SYSTEM BASE MAINTENANCE (3)

BATTERY CAPACITY CHECK VIA THE MCDU (continued)

A/C MAINTENANCE CONFIGURATION

Make sure the A/C and the Cabin Intercommunication Data System (CIDS) are energized. In the cabin, on the Flight Attendant Panel (FAP), make sure the EMER P/BSW is released.
In the cockpit, make sure the EMER EXIT LT switch and the NO SMOKING switch are in the OFF position. Check that the EMER EXIT LT OFF indicator is illuminated and that the MCDU is on the SYSTEM REPORT/TEST item COM CABIN menu page.

Battery capacity check via the MCDU:

...
Job set-up
...

✓ **Caution and notes.**

A/C maintenance configuration:
✓ - A/C and CIDS energized,
- EMER P/BSW on FAP released,
- EMER EXIT LT switch & NO SMOKING switch in OFF position,
- EMER EXIT LT OFF indicator on,
- MCDU on SYSTEM REPORT/TEST item COM CABIN menu.

...
Procedure
...

Battery capacity check.

...
Close-up
...

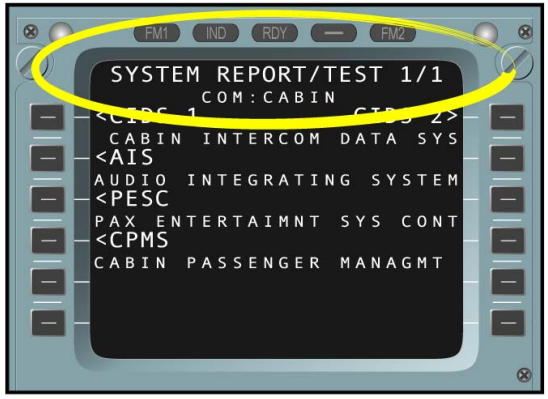

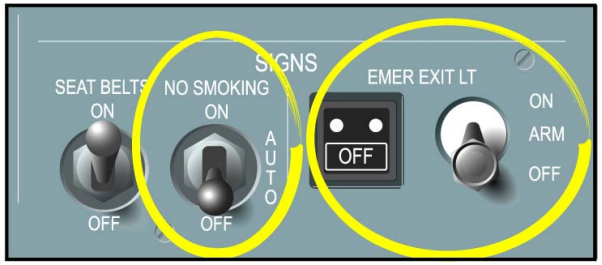

(215VU)

(925VU)
A/C ENERGIZED

FAP

BATTERY CAPACITY CHECK VIA THE MCDU - A/C MAINTENANCE CONFIGURATION

LIGHTS SYSTEM BASE MAINTENANCE (3)

BATTERY CAPACITY CHECK VIA THE MCDU (continued)

PROCEDURE VIA THE MCDU

Select the line key CIDS 1 to get access to the CIDS 1 menu page.
Select the line key EPSU/SRPSU BAT CAP TEST to open the EPSU/SRPSU BAT CAP TEST 1/2 menu page.
Select the down-arrow function key. The message IN PROGRESS 60S comes on, then the EPSU/SRPSU BAT CAP TEST 2/2 menu page comes on.
Enter the airline access code with the alphanumeric keys. Now you can select the line key START TEST.
Select the line key START TEST in order to display the test launch screen.
Confirm the start of the test with the appropriate line select key. The message TEST IN PROGRESS 3 HR appears.
Put a warning notice at the MCDU to prevent persons from using the MCDU during the test. When the test is completed, the message TEST OK appears on the screen.
Remove the warning notice. Push the line select key RETURN until the MCDU MENU page comes on.
Put the A/C in initial conditions.

Battery capacity check via the MCDU:

...

Job set-up

...

Caution and notes.

A/C maintenance configuration:

...

Procedure

...

Battery capacity check:

ACTION	RESULT
In the cockpit on the MCDU:	In the cockpit on the MCDU:
- push the line select key CIDS 1.	- the CIDS 1 menu page comes on.
- Push the line select key EPSU/SRPSU BAT CAP TEST.	-The EPSU/SRPSU BAT CAP TEST 1/2 menu page comes on.
- Push the down-arrow function key.	- The message IN PROGRESS 60S comes on, then the EPSU BAT CAP TEST 2/2 menu page comes on.
- With alphanumerics keys, enter the four digits airline access code.	- In the scratchpad the user-access code XXXX appears. - The < prompt in front of the message START TEST comes on.
- Push the line select key START TEST.	- The message CONFIRM START OF TEST comes on.
...	

...

Close-up

...

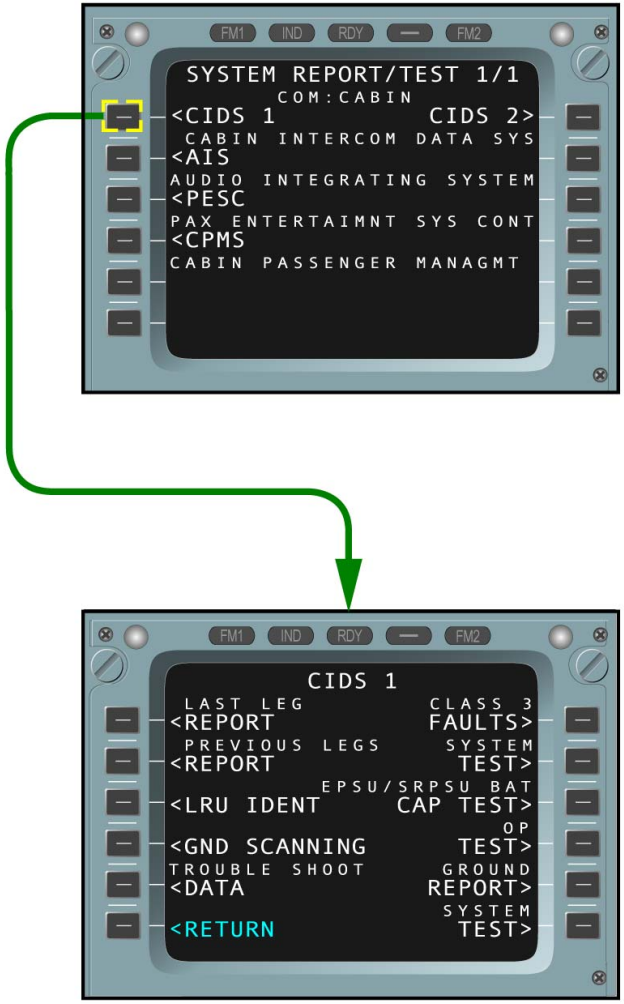

BATTERY CAPACITY CHECK VIA THE MCDU - PROCEDURE VIA THE MCDU

Battery capacity check via the MCDU:

...

Job set-up

...

Caution and notes.

A/C maintenance configuration:

...

Procedure

...

Battery capacity check:

ACTION	RESULT
In the cockpit on the MCDU:	In the cockpit on the MCDU:
- push the line select key CIDS 1.	- the CIDS 1 menu page comes on.
- Push the line select key EPSU/SRPSU BAT CAP TEST.	-The EPSU/SRPSU BAT CAP TEST 1/2 menu page comes on.
- Push the down-arrow function key.	- The message IN PROGRESS 60S comes on, then the EPSU BAT CAP TEST 2/2 menu page comes on.
- With alphanumerics keys, enter the four digits airline access code.	- In the scratchpad the user-access code XXXX appears. - The < prompt in front of the message START TEST comes on.
- Push the line select key START TEST.	- The message CONFIRM START OF TEST comes on.
...	

...

Close-up

...

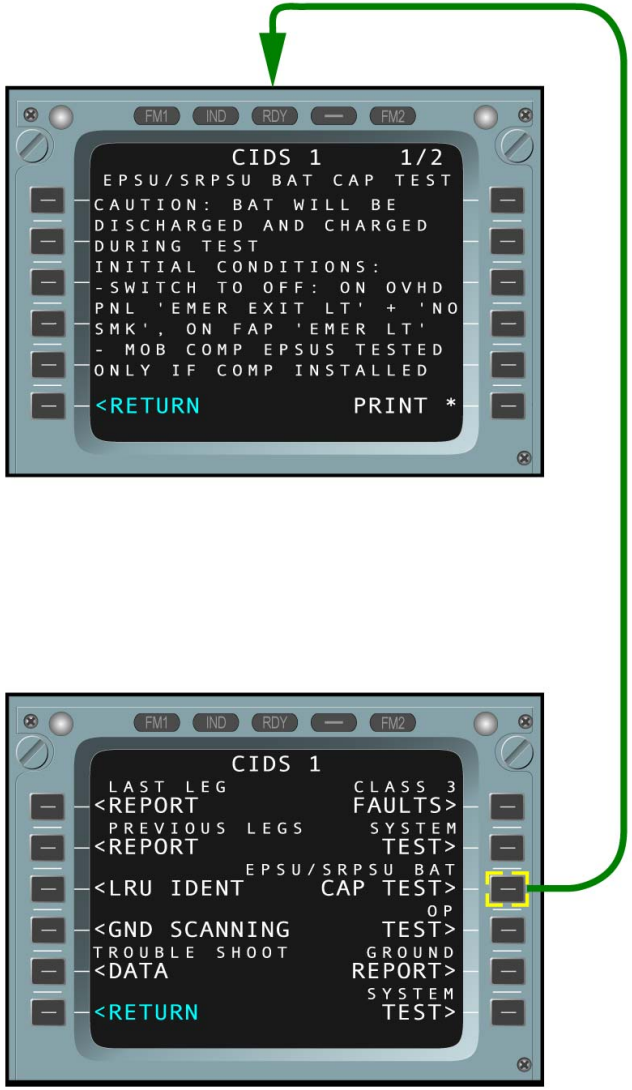

BATTERY CAPACITY CHECK VIA THE MCDU - PROCEDURE VIA THE MCDU

G7508471 - G3NT1T0 - FM33Y2BASEMCE02

Battery capacity check via the MCDU:

...
Job set-up
...

Caution and notes.

A/C maintenance configuration:

...
Procedure
...

Battery capacity check:

ACTION	RESULT
In the cockpit on the MCDU:	In the cockpit on the MCDU:
- push the line select key CIDS 1.	- the CIDS 1 menu page comes on.
- Push the line select key EPSU/SRPSU BAT CAP TEST.	-The EPSU/SRPSU BAT CAP TEST 1/2 menu page comes on.
- Push the down-arrow function key.	- The message IN PROGRESS 60S comes on, then the EPSU BAT CAP TEST 2/2 menu page comes on.
- With alphanumerics keys, enter the four digits airline access code.	- In the scratchpad the user-access code XXXX appears. - The < prompt in front of the message START TEST comes on.
- Push the line select key START TEST.	- The message CONFIRM START OF TEST comes on.
...	

...
Close-up
...

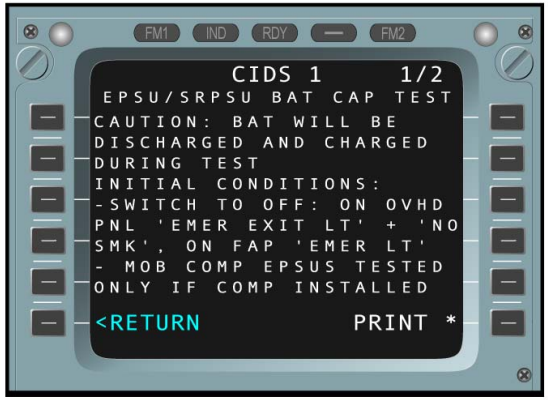

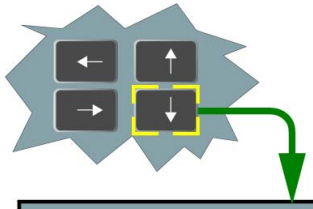

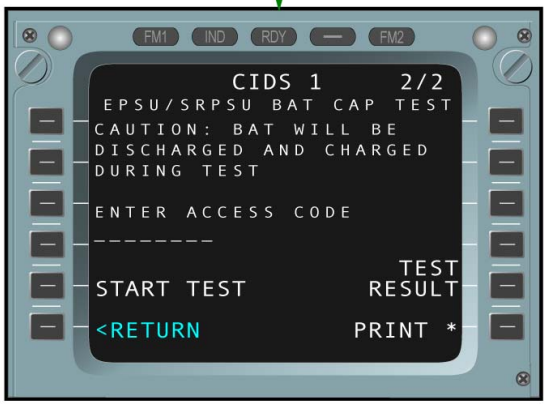

BATTERY CAPACITY CHECK VIA THE MCDU - PROCEDURE VIA THE MCDU

G7508471 - G3NT1T0 - FM33Y2BASEMCE02

Battery capacity check via the MCDU:

...
Job set-up
...

Caution and notes.

A/C maintenance configuration:

...
Procedure
...

Battery capacity check:

ACTION	RESULT
In the cockpit on the MCDU:	In the cockpit on the MCDU:
- push the line select key CIDS 1.	- the CIDS 1 menu page comes on.
- Push the line select key EPSU/SRPSU BAT CAP TEST.	-The EPSU/SRPSU BAT CAP TEST 1/2 menu page comes on.
- Push the down-arrow function key.	- The message IN PROGRESS 60S comes on, then the EPSU BAT CAP TEST 2/2 menu page comes on.
- With alphanumerics keys, enter the four digits airline access code.	- In the scratchpad the user-access code XXXX appears. - The < prompt in front of the message START TEST comes on.
- Push the line select key START TEST.	- The message CONFIRM START OF TEST comes on.
...	

...
Close-up
...

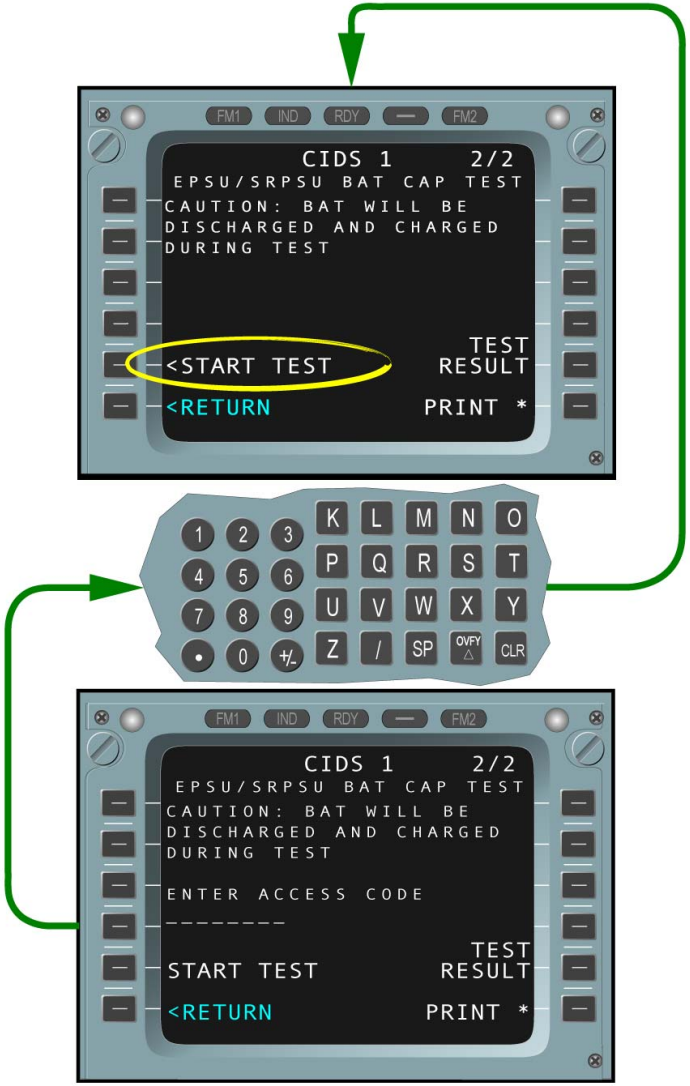

BATTERY CAPACITY CHECK VIA THE MCDU - PROCEDURE VIA THE MCDU

Battery capacity check via the MCDU:

...
Job set-up
...

Caution and notes.

A/C maintenance configuration:

...
Procedure
...

Battery capacity check:

ACTION	RESULT
In the cockpit on the MCDU:	In the cockpit on the MCDU:
- push the line select key CIDS 1.	- the CIDS 1 menu page comes on.
- Push the line select key EPSU/SRPSU BAT CAP TEST.	-The EPSU/SRPSU BAT CAP TEST 1/2 menu page comes on.
- Push the down-arrow function key.	- The message IN PROGRESS 60S comes on, then the EPSU BAT CAP TEST 2/2 menu page comes on.
- With alphanumerics keys, enter the four digits airline access code.	- In the scratchpad the user-access code XXXX appears. - The < prompt in front of the message START TEST comes on.
- Push the line select key START TEST.	- The message CONFIRM START OF TEST comes on.
...	

...
Close-up
...

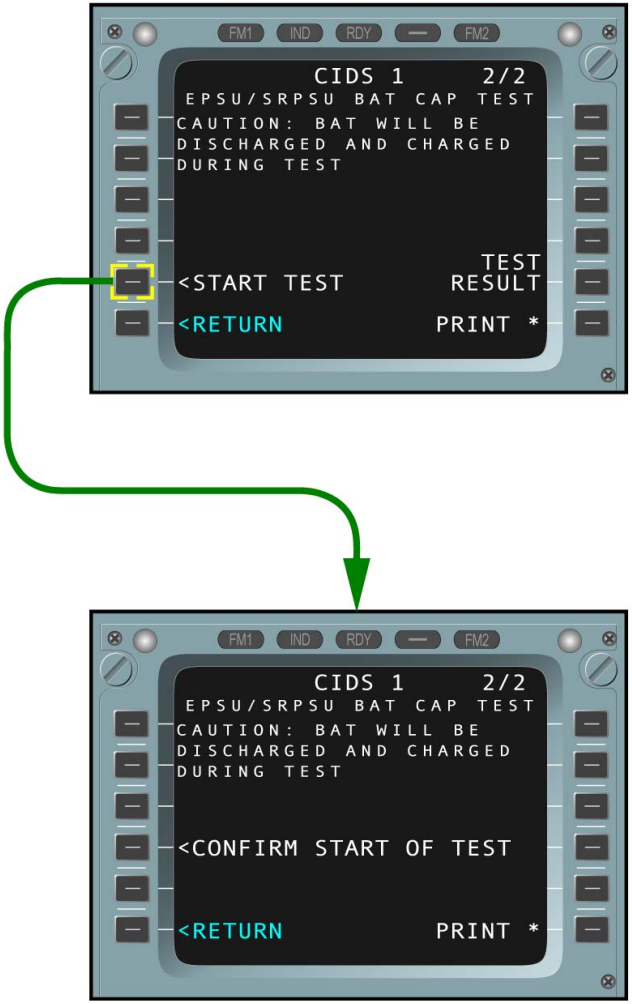

BATTERY CAPACITY CHECK VIA THE MCDU - PROCEDURE VIA THE MCDU

Battery capacity check via the MCDU:

...
Job set-up
...

Caution and notes.

A/C maintenance configuration:

...
Procedure
...

Battery capacity check:

ACTION	RESULT
...	
- Push the line select key CONFIRM START OF TEST.	- The message TEST IN PROGRESS 3 HR comes on.
- Put a warning notice at the MCDU to prevent persons from using the MCDU.	
	- As soon as the test is completed, the message TEST OK appears.
- Remove the warning notice.	
- Push the line select key RETURN, until the MCDU MENU menu page comes on.	

...
Close-up
...

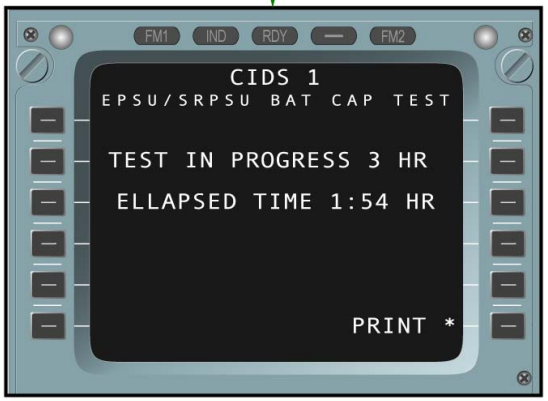

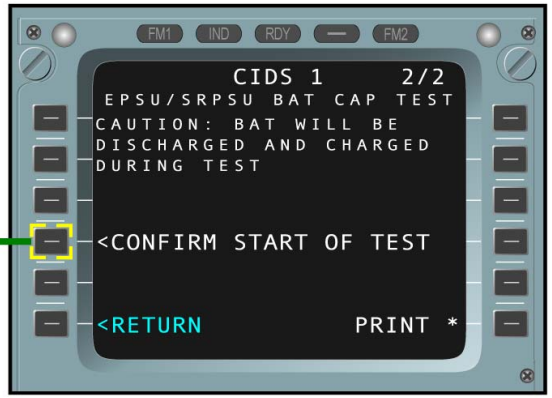

BATTERY CAPACITY CHECK VIA THE MCDU - PROCEDURE VIA THE MCDU

Battery capacity check via the MCDU:

...
Job set-up
...

Caution and notes.

A/C maintenance configuration:

...
Procedure
...

Battery capacity check:

ACTION	RESULT
...	
- Push the line select key CONFIRM START OF TEST.	- The message TEST IN PROGRESS 3 HR comes on.
- Put a warning notice at the MCDU to prevent persons from using the MCDU.	
	- As soon as the test is completed, the message TEST OK appears.
- Remove the warning notice.	
- Push the line select key RETURN, until the MCDU MENU menu page comes on.	

...
Close-up
...

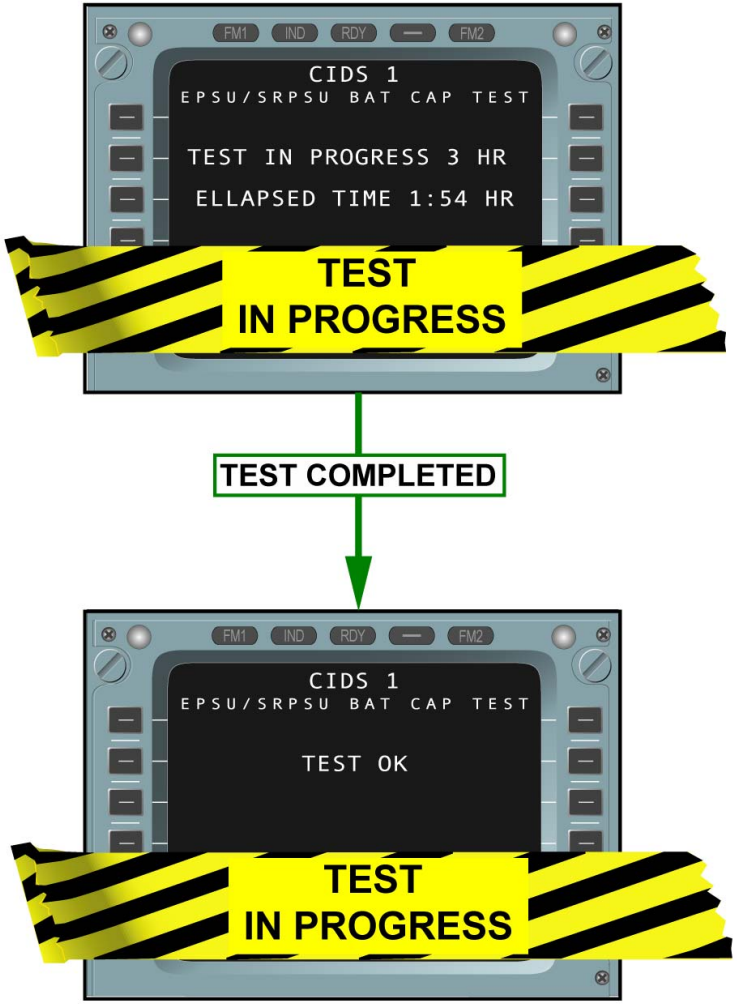

BATTERY CAPACITY CHECK VIA THE MCDU - PROCEDURE VIA THE MCDU

G7508471 - G3NT1T0 - FM33Y2BASEMCE02

Battery capacity check via the MCDU:

...

Job set-up

...

Caution and notes.

A/C maintenance configuration:

...

Procedure

...

Battery capacity check:

ACTION	RESULT
...	
- Push the line select key CONFIRM START OF TEST.	- The message TEST IN PROGRESS 3 HR comes on.
- Put a warning notice at the MCDU to prevent persons from using the MCDU.	
	- As soon as the test is completed, the message TEST OK appears.
- Remove the warning notice. - Push the line select key RETURN, until the MCDU MENU menu page comes on.	

...

Close-up

...

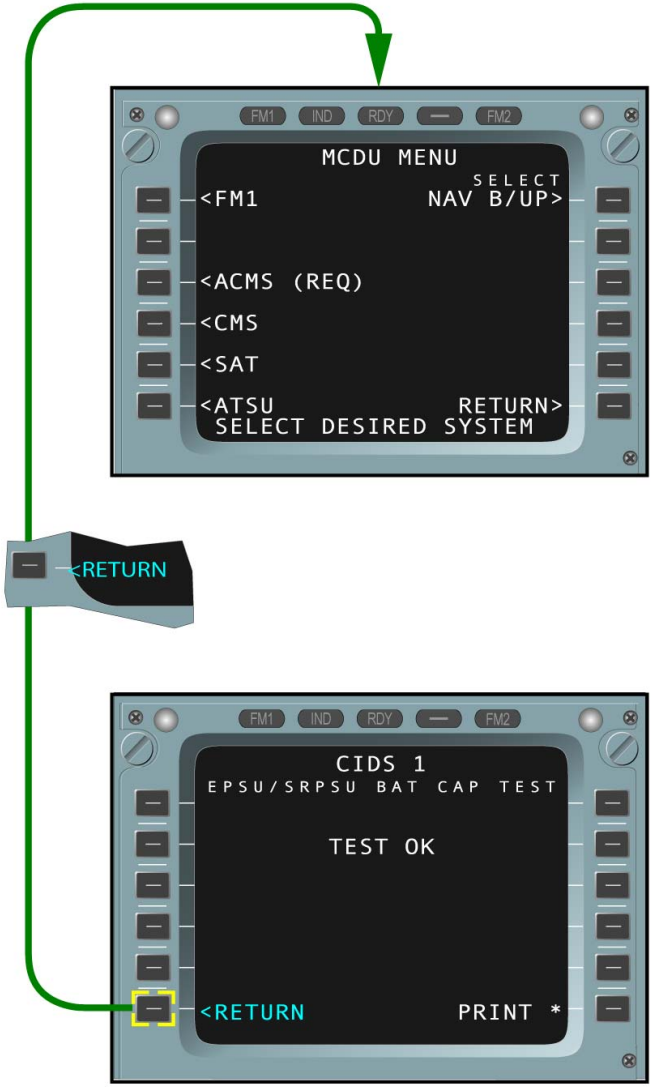

BATTERY CAPACITY CHECK VIA THE MCDU - PROCEDURE VIA THE MCDU

G7508471 - G3NT1T0 - FM33Y2BASEMCE02

Battery capacity check via the MCDU:

...
✓ Job set-up
...
✓ Caution and notes.
✓ A/C maintenance configuration.
...
✓ Procedure
...
✓ Battery capacity check.
...
✓ Close-up
...

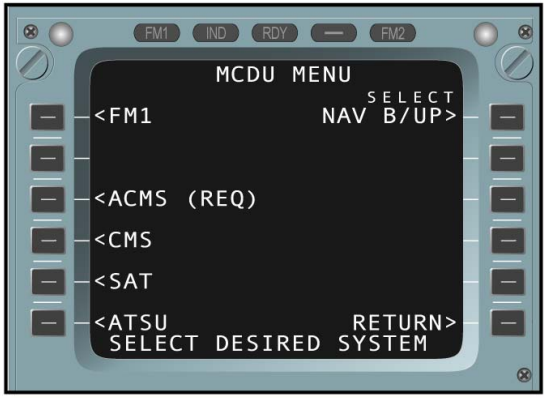

TASK
COMPLETED

BATTERY CAPACITY CHECK VIA THE MCDU - PROCEDURE VIA THE MCDU

AIRBUS S.A.S.
31707 BLAGNAC cedex, FRANCE
STM
REFERENCE G7508471
NOVEMBER 2008
PRINTED IN FRANCE
AIRBUS S.A.S. 2008
ALL RIGHTS RESERVED

AN EADS COMPANY

A330-200/300
TECHNICAL TRAINING MANUAL
MAINTENANCE COURSE - T1+T2 (LVL 2&3) (RR Trent 700)
NAVIGATION

This document must be used for training purposes only

Under no circumstances should this document be used as a reference

It will not be updated.

All rights reserved
No part of this manual may be reproduced in any form,
by photostat, microfilm, retrieval system, or any other means,
without the prior written permission of AIRBUS S.A.S.

AIRBUS Environmental Recommendation
Please consider your environmental responsability before printing this document.

NAVIGATION

Navigation Line Maintenance Briefing (2) 2

GENERAL

ADIRS & Standby Instruments General Desc. (3) 14
Radio Navigation Tuning Description (3) 20

ADIRS

ADIRS D/O (3) 22
ADIRS Switching D/O (3) 30

ISIS

Standby Instruments D/O (3) 34

SATELLITE NAVIGATION

Satellite Navigation D/O (3) 46

MMR

MMR D/O (3) 48

VOR/MKR-DME-ADF-DDRMI

VOR/MKR-DME-ADF D/O (3) 58

TAWS/EGPWS/T2CAS

TAWS/EGPWS/T2CAS D/O (3) 72

RADIO ALTIMETER

Radio Altimeter D/O (3) 104

WEATHER RADAR

WXR/PWS D/O (3) 106

ATC/TCAS

ATC/TCAS D/O (3) 112

NAVIGATION LINE MAINTENANCE BRIEFING (2)

GENERAL

The Air Data and Inertial Reference System (ADIRS) is composed of three identical Air Data and Inertial Reference Units (ADIRUs), one ADIRS Mode Selector Unit (ADIRS MSU) and several sensors. The ADIRUs receive information from the sensors in order to compute air and internal laser gyros and accelerometers to compute inertial data. This data is displayed to the crew and sent to the MCDU and other A/C systems. The sensors also send information to the Integrated Standby Instrument System (ISIS) for standby display.

G7508471 - G7OT0T0 - FM34B1000000001

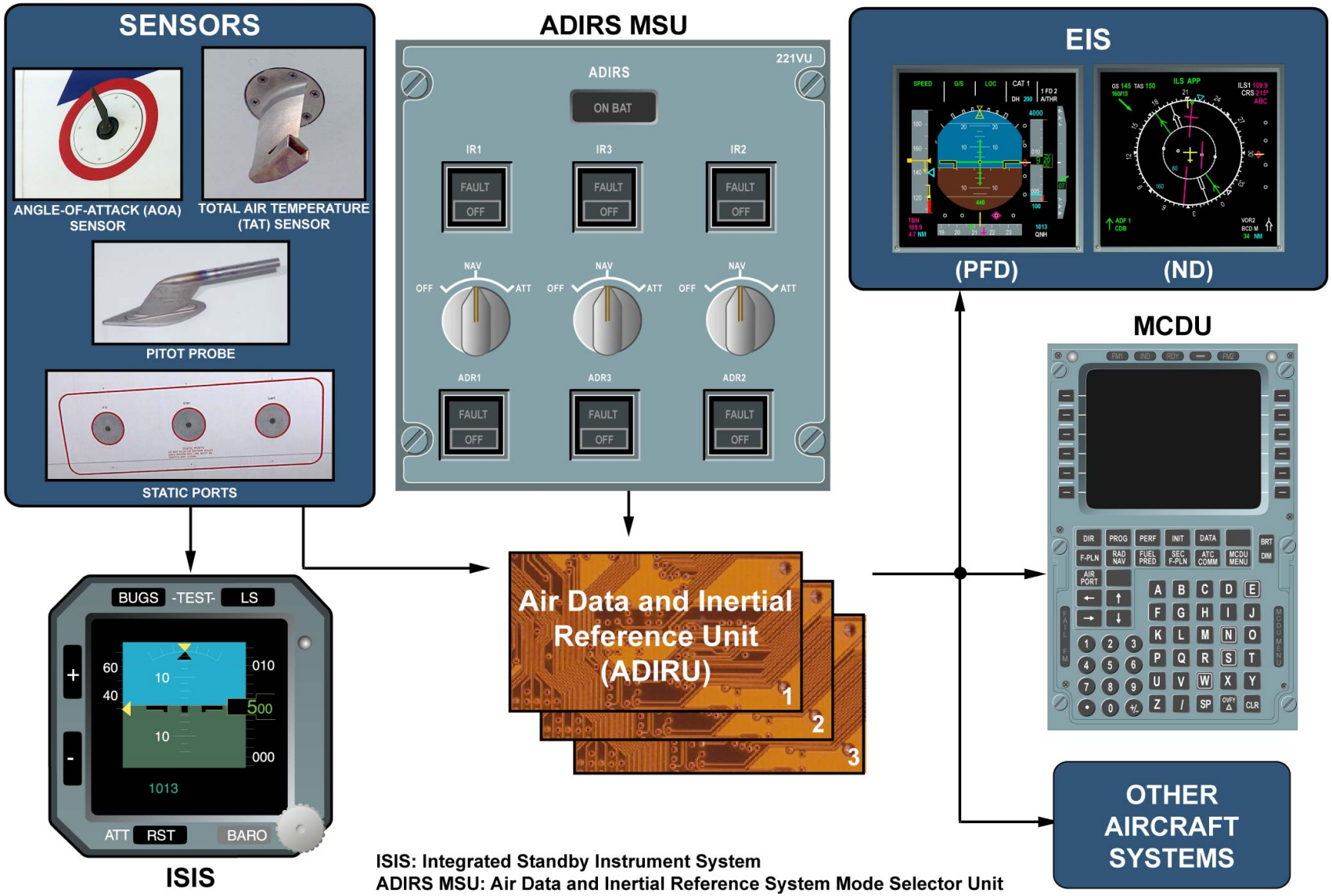

ISIS: Integrated Standby Instrument System
ADIRS MSU: Air Data and Inertial Reference System Mode Selector Unit

GENERAL

G7508471 - G7OT0T0 - FM34B1000000001

NAVIGATION LINE MAINTENANCE BRIEFING (2)

ADIRS - ALIGNMENT

BATTERIES TEST

NOTE: Note: There is no specific ADIRS battery.

ALIGNMENT OF THE IRS

The Flight Management Guidance and Envelope System (FMGES) uses the reference point coordinates of the departure airport to align the Inertial Reference System (IRS). It automatically calls these up from the database after the operator has entered a company route or an origin-destination city pair and pressed the ALIGN IRS on the MCDU. The operator can manually adjust these coordinates to the gate position. A complete alignment takes 10 minutes. A specific alignment procedure has to be respected beyond 73°and 82° north or south (to refer to FCOM documentation). The alignment procedure is not possible beyond 82° north or south.

ADIRS MSU

MCDU

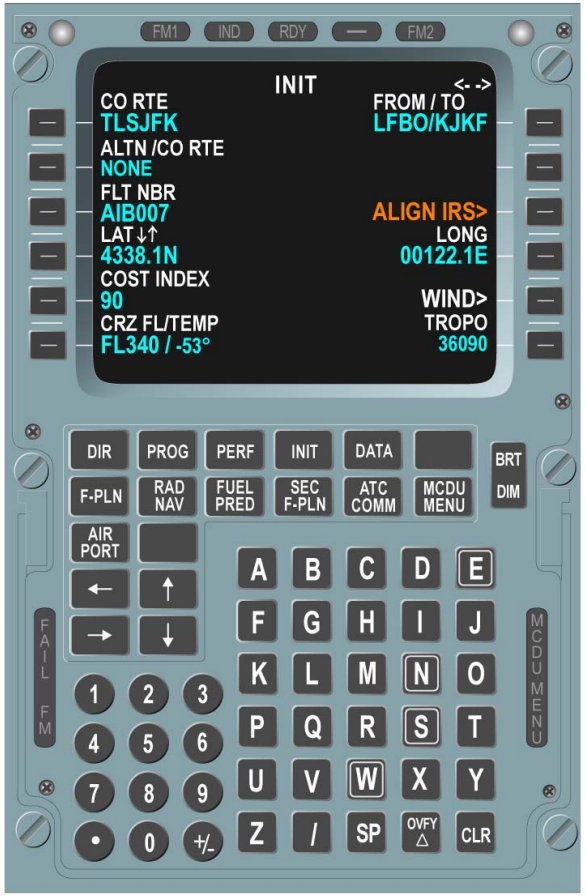

Each time a selector is switched to NAV, the ON BAT ligth comes on for a few seconds in order to test the switching to the aircraft batteries.

ADIRS - ALIGNMENT - BATTERIES TEST & ALIGNMENT OF THE IRS

NAVIGATION LINE MAINTENANCE BRIEFING (2)

ADIRS - ALIGNMENT (continued)

AUTOMATIC ALIGNMENT BY GPS (OPTION)

With the latest ADIRUs, an optional automatic alignment by GPS position is possible. This initialization by GPS does not require any operator action. Less than 1 minute after setting the ADIRS to NAV, the INIT page displays the GPS position, without displaying the ALIGN IRS prompt message. The complete alignment will take between 5 and 10 minutes depending on the local latitude and up to 17 minutes between 73°and 82° north or south. If the operator enters a company route, or an origin-destination city pair, the INIT page displays the departure airport reference-point coordinates, and the IRS ALIGN prompt message appears. If the prompt key is not pressed, the ADIRS will be aligned on the GPS position. If the prompt key is pressed the ADIRS will be aligned on the reference point coordinates of the departure airport. The operator can also modify the indicated aircraft position using the MCDU latitude and longitude keys of the INIT page. In that case the ALIGN IRS prompt key will appear and has to be pressed.

G7508471 - G7OT0T0 - FM34B1000000001

ADIRS MSU

MCDU

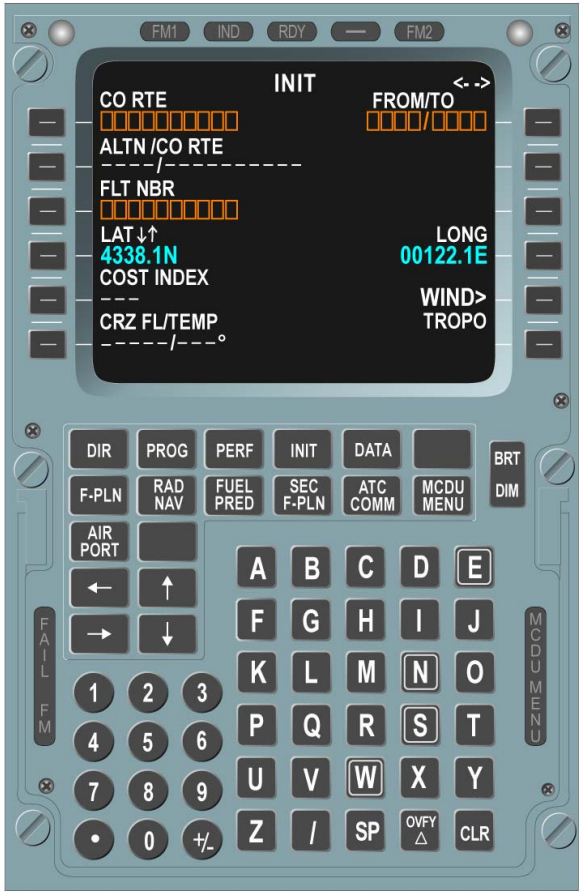

Initialization by GPS does not require any operator action on the MCDU.

ADIRS - ALIGNMENT - AUTOMATIC ALIGNMENT BY GPS (OPTION)

NAVIGATION LINE MAINTENANCE BRIEFING (2)

ADIRS - ALIGNMENT (continued)

FAST REALIGNMENT

During transit or en-route stops with brief ground times, the flight crew may do a fast re-alignment by selecting from NAV to OFF and then back to NAV within 5 seconds. The Inertial Reference (IR) starts a 30 seconds realignment with existing attitude, heading angles and velocities set to zero.

NOTE: Note: The ALIGN IRS prompt will appear and has to be pressed to achieve the alignment. With the optional automatic alignment by GPS, the procedure is the same except that no pilot entry is necessary (no action needed on the ALIGN IRS prompt).

G7508471 - G7OT0T0 - FM34B1000000001

ADIRS MSU

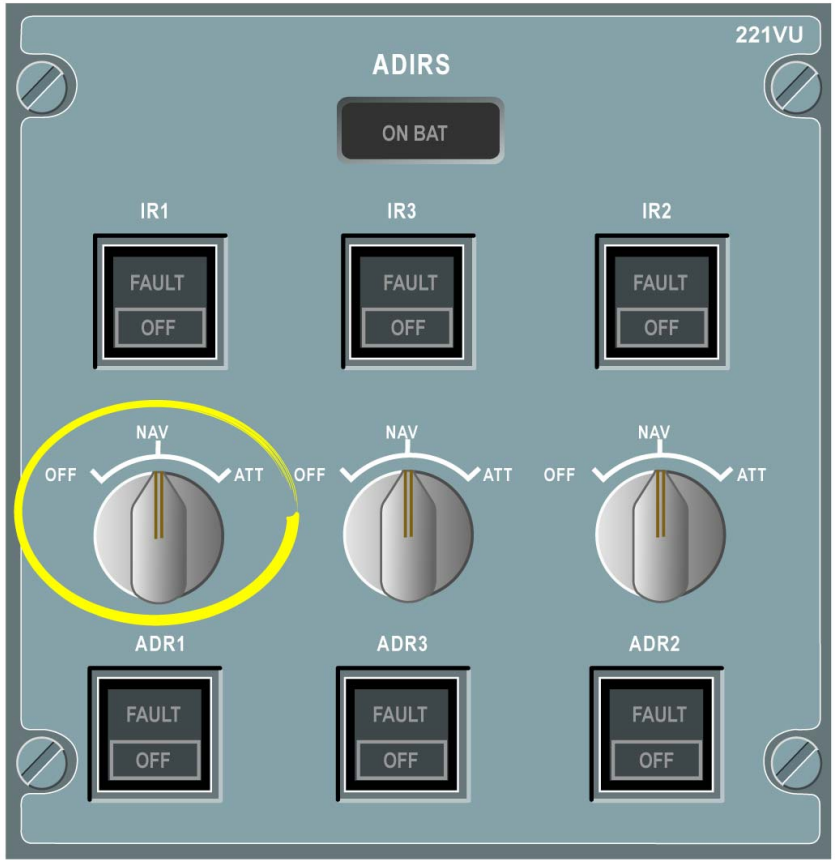

MCDU

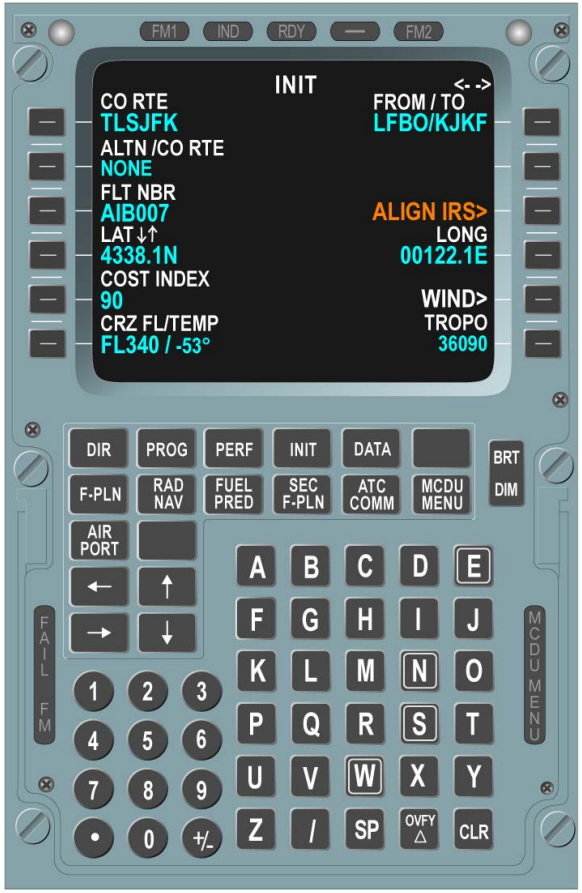

30 seconds fast realignment:
Select NAV to OFF and then back to NAV within 5 seconds.

ADIRS - ALIGNMENT - FAST REALIGNMENT

NAVIGATION LINE MAINTENANCE BRIEFING (2)

INTERRUPTION DURING ALIGNEMENT

EXCESSIVE MOTION

If taxing or towing causes a step input exceeding a threshold, alignment or rapid realignment is stopped and then the ADIRUs revert to the beginning of a 10 minutes alignment. Step input threshold: 0.5ft/s, 30 seconds after motion has been detected, and no other motion has occurred, a 10 minutes alignment begins.

NOTE: Note: It is not necessary to re-initialize the position if already entered.

TEST OF STORED POSITION

When the initial position is entered, the ADIRUs check if it is within a threshold of the computed position, which has been stored at the last ADIRU shutdown. If not, an MCDU message "REALIGN IRS" is displayed requiring insertion of the present position. Test threshold: 1° for latitude and longitude during alignment, 0.5° during rapid realignment.

NOTE: Note: If the new position does not pass the test, the system waits for another position entry. If the same position (out of the threshold) is entered twice, the ADIRUs accept it as a deliberate choice.

TEST OF COMPUTED LATTITUDE

At the end of the alignment, the ADIRUs check if the entered latitude is within a threshold of the self computed latitude. If not, an MCDU message "REALIGN IRS" is displayed requiring insertion of the present position. At a new position entry, the IRS alignment is necessary. If this position passes the test, the alignment is completed.

NOTE: Note: If the test failed twice, the IRS detects a fault situation (indications on MSU and EWD). In that case, switch the ADIRUs to OFF, wait 20 seconds and try a complete new alignment.

G7508471 - G7OT0T0 - FM34B1000000001

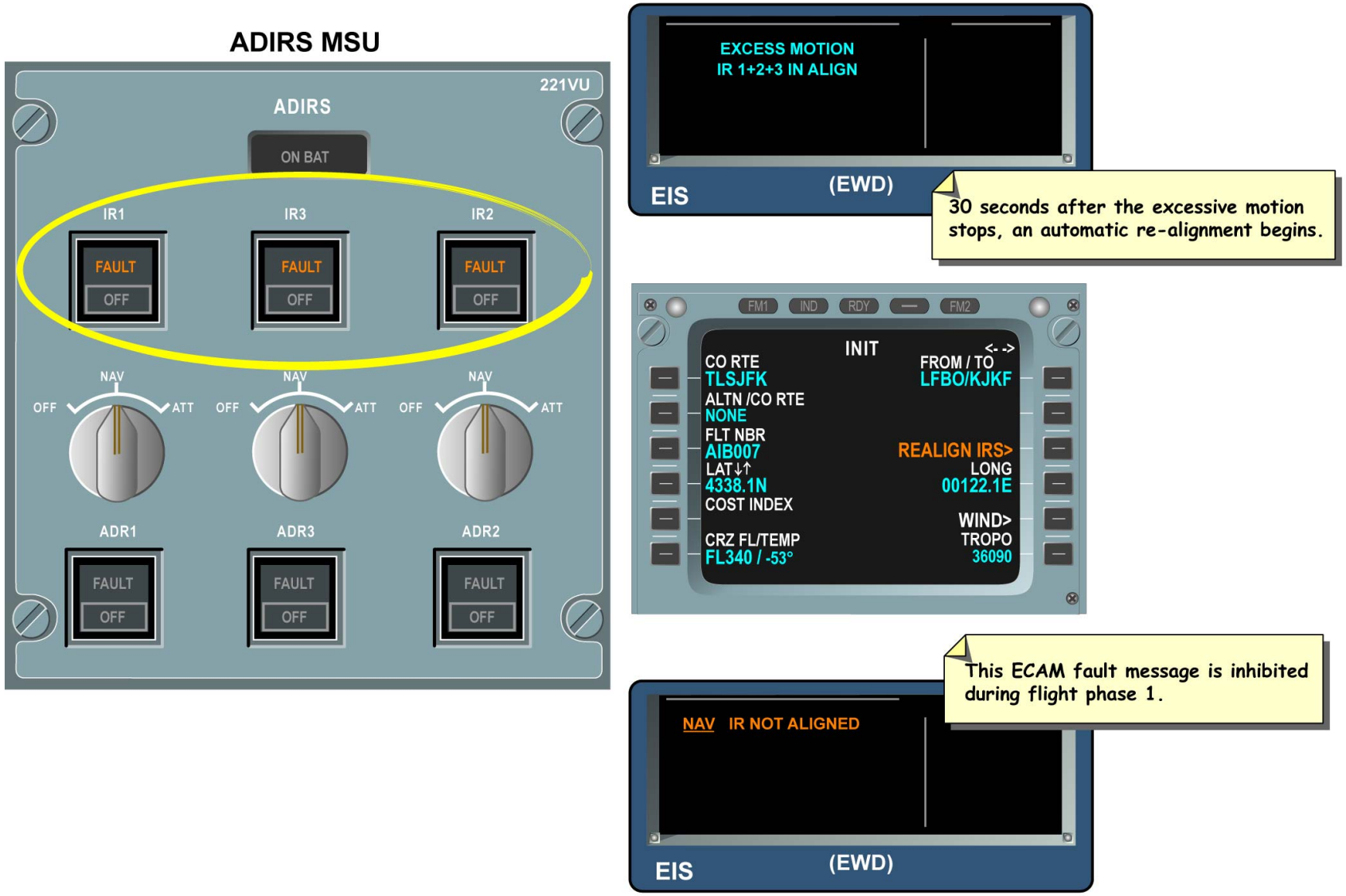

INTERRUPTION DURING ALIGNEMENT - EXCESSIVE MOTION ... TEST OF COMPUTED LATTITUDE

NAVIGATION LINE MAINTENANCE BRIEFING (2)

MAINTENANCE TIPS

In some situations, if you do not know the airport point coordinates, you can waste time aligning the ADIRS and doing the maintenance task. For example, the GPS is not available and you are not at your usual airport. An easy way to retrieve the local data for longitude and latitude (to align the ADIRS) can be to print out the Post Flight Report (PFR). On the PFR header, the origin-destination city pair is normally presented. Take the 4 letters of the destination city and enter them, via the MCDU scratchpad line, both in the "FROM" and "TO" fields of the INIT page, e.g. "LFBO/KJFK". Then press on the ALIGN IRS prompt.

G7508471 - G7OT0T0 - FM34B1000000001

MCDU

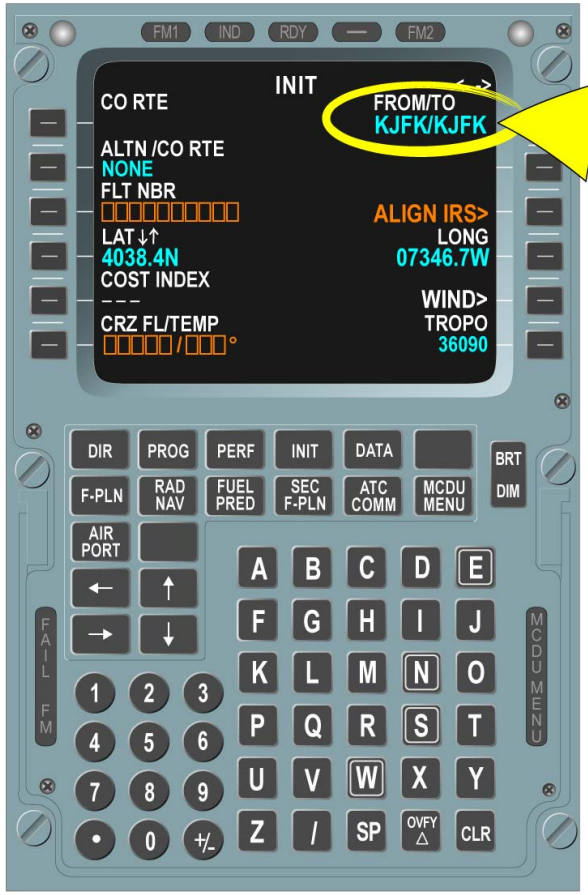

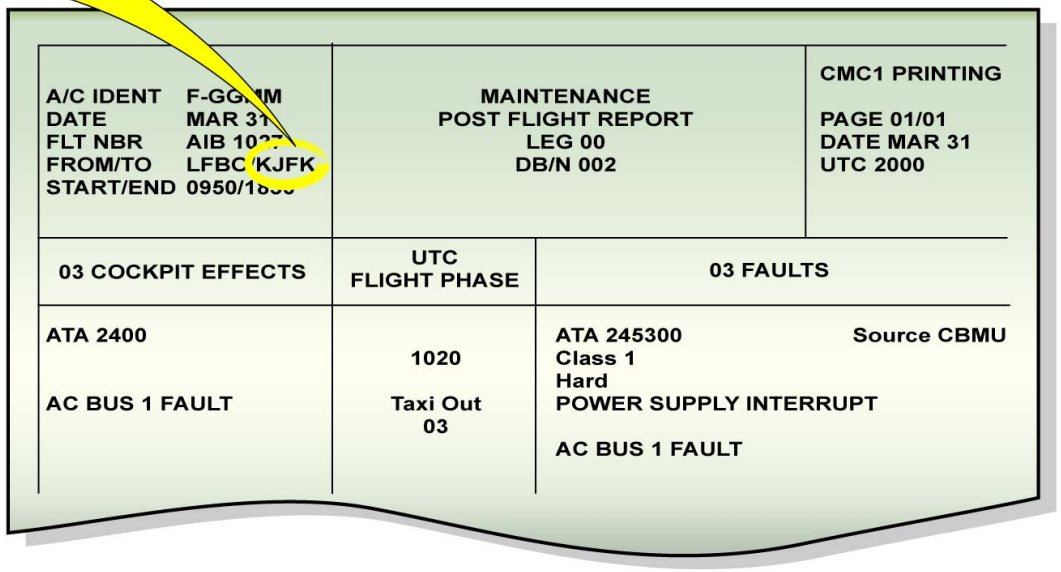

MAINTENANCE TIPS

ADIRS & STANDBY INSTRUMENTS GENERAL DESC. (3)

GENERAL

The Air Data and Inertial Reference System (ADIRS) is composed of three identical Air Data and Inertial Reference Units (ADIRUs), one ADIRS Mode Selector Unit (ADIRS MSU) and several sensors. The ADIRUs receive information from the sensors in order to compute air data and internal laser gyros and accelerometers to compute inertial data. This data is displayed to the crew and sent to the MCDU and other aircraft systems. The sensors also send information to the Integrated Standby Instrument System (ISIS) for standby display.

G7508471 - G7OT0T0 - FM34DB000000001

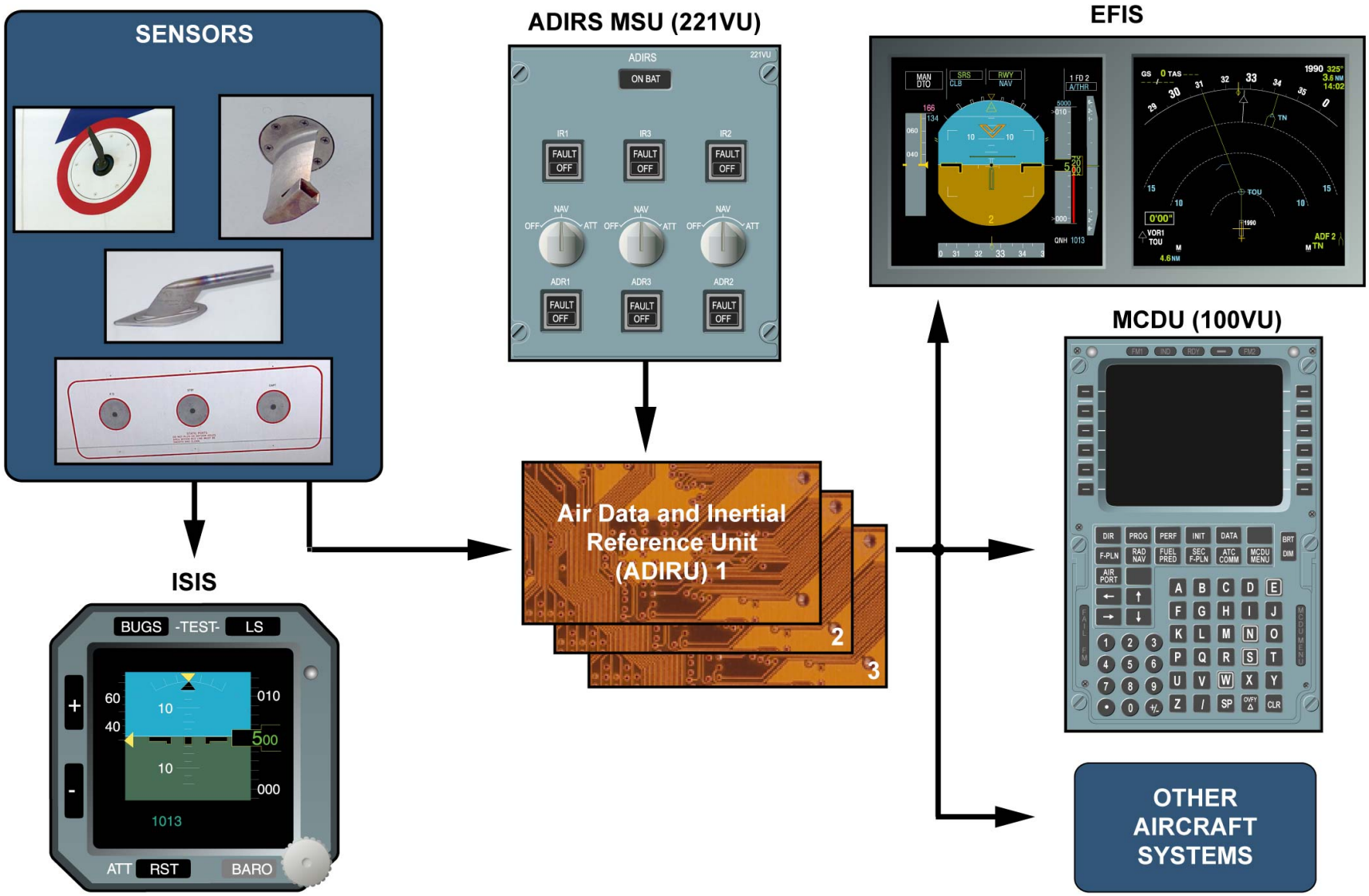

GENERAL

G7508471 - G7OT0T0 - FM34DB000000001

ADIRS & STANDBY INSTRUMENTS GENERAL DESC. (3)

ADIRS GENERAL

The ADIRUs are used as primary means of navigation. Each ADIRU is a combination of an Air Data Reference (ADR) and an Inertial Reference (IR) inside a single unit.

INPUTS

The ADIRUs receive data from several air data sensors. Pitot and static inputs are processed by Air Data Modules (ADMs) and sent to the ADIRUs, in addition, the information from the Angle Of Attack (AOA) and Total Air Temperature (TAT) sensors send their information directly to the ADIRUs. Standby pitot and static data are also sent to the ISIS. The inertial part of the ADIRUs receives Global Positioning System (GPS) information from the Multi Mode Receiver (MMR). The GPS is optional on the A330/A340-200/300.

COMPUTATION

The ADIRUs inertial part calculates and outputs: attitude, heading, angular rate, acceleration, vertical speed, aircraft position and ground speed. The ADIRUs air data part provides anemometric data such as airspeed, Mach number, static and total temperature, and barometric altitude.

OUTPUTS

The ADIRUs provide information to many of the Line Replaceable Units (LRUs) as well as attitude and heading information displayed on the PFD and ND via the Display Management Computers (DMCs). ADIRU 1 and ADIRU 3 provide heading data to the Digital Distance and Radio Magnetic Indicator (DDRMI).
Displayed heading data is referenced to true or magnetic north, control of the type of output is selectable by the flight crew via the true/MAGnetic pushbutton. The ADIRUs also provide information to the Flight Management Guidance and Envelope Computer (FMGEC) for flight management purposes.

SWITCHING

The ADIRU SWITCHING panel is located on the center pedestal. In normal configuration, ADIRU 1 supplies the CAPT EFIS, and heading to the DDRMI. ADIRU 2 supplies the F/O EFIS and ADIRU 3 is in standby. In case of failure of the ADR or IR function of ADIRU 1 or 2, the affected instruments and displays can be manually switched to ADIRU 3 by turning the switch on the SWITCHING panel.

CONTROLS

The ADIRS MSU is used to turn the ADIRUs on and off. The OFF/NAV/ATT switch controls of the ADIRS MSU allow to power each ADIRU. The ADIRS MSU provides FAULT/OFF indications of the IR and ADR parts of the ADIRUs. It also enables switching from normal operation mode to back-up mode in case of loss of navigation capability. In this case, only attitude and heading information is available.
IRS initialization is normally performed through the FMGEC via the MCDU. The MCDU also displays ADIRS parameters. The Flight Control Unit (FCU) provides the capability of adjusting the barometric reference to the ADIRUs.

NOTE: Note : with the latest version of the Flight Management System (FMS), an auto-alignment by GPS is available.

INTERFACE

The ADIRUs are directly connected to various user systems (Flight Warning Computer (FWC), Full Authority Digital Engine Control (FADEC), DDRMI), and to the Flight Control Computers (FCCs).

G7508471 - G7OT0T0 - FM34DB000000001

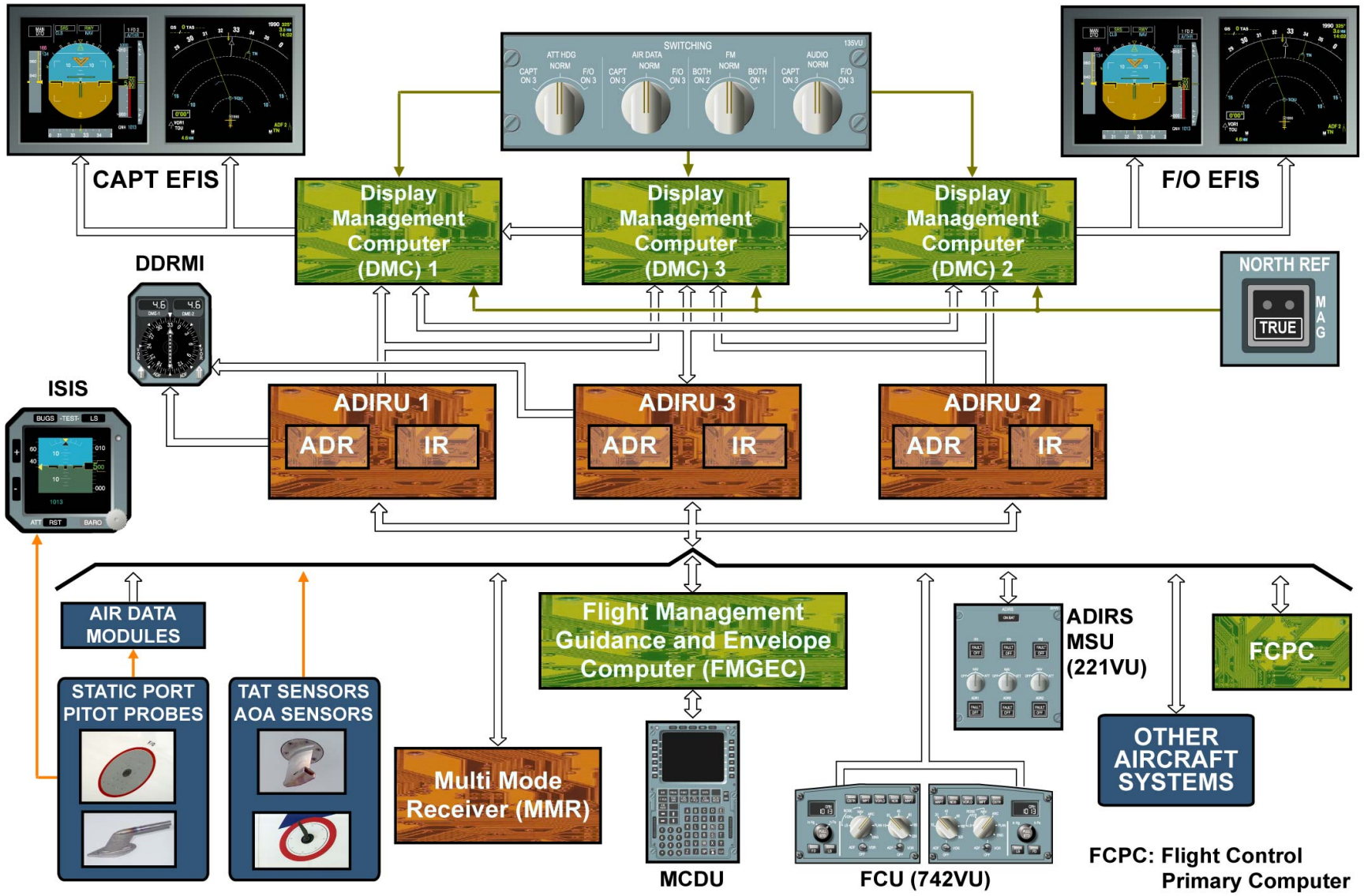

ADIRS GENERAL - INPUTS ... INTERFACE

G7508471 - G7OT0T0 - FM34DB000000001

ADIRS & STANDBY INSTRUMENTS GENERAL DESC. (3)

ISIS GENERAL

The ISIS replaces three conventional standby instruments:
- the standby altimeter,
- the standby horizon indicator,
- the standby airspeed indicator.

PRESENTATION

ISIS is composed of:
- a pressure module with its associated pressure sensors,
- an inertial module with its associated gyroscopes and accelerometers,
- a computation module for operational parameters calculation (altitude, airspeed, attitude) and graphics generation,
- a display module (color liquid crystal display).

DISPLAY

ISIS can display:
- airspeed and Mach number,
- pitch and roll angles,
- lateral acceleration,
- altitude,
- ILS information,
- reference barometric pressure in Hpa.

Optionally, ISIS can also display:
- metric altitude,
- barometric correction in IN.HG,
- magnetic heading.

MAINTENANCE/TEST FACILITIES

ISIS is fitted with a BITE. Specific maintenance and test menus are directly accessible by using the keys on the front face of the instrument. ISIS is connected to the Central Maintenance Computer (CMC) for BITE status interrogation.

G7508471 - G7OT0T0 - FM34DB000000001

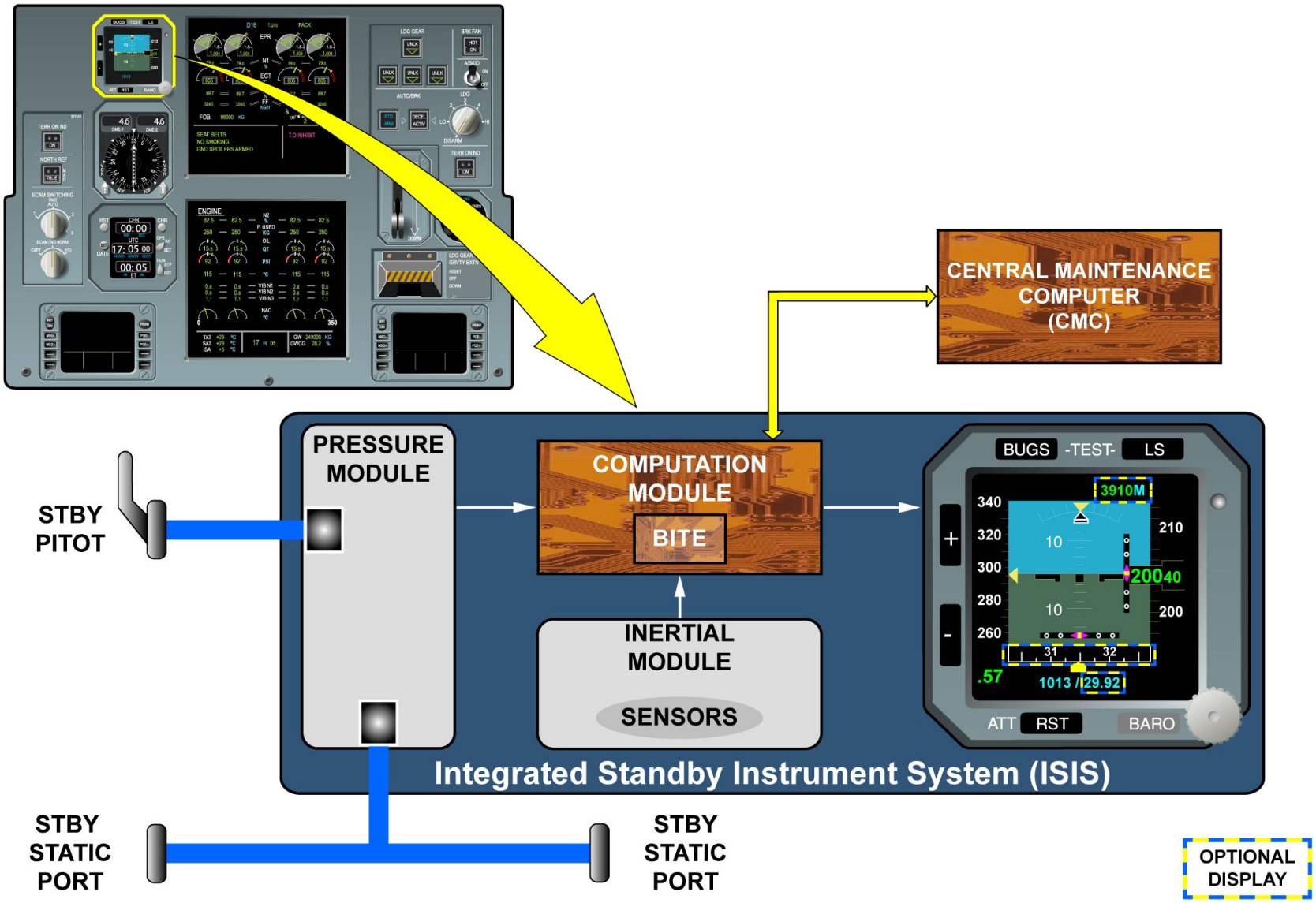

ISIS GENERAL - PRESENTATION ... MAINTENANCE/TEST FACILITIES

RADIO NAVIGATION TUNING DESCRIPTION (3)

GENERAL

The aircraft is fitted with the following radio navigation aids:
- 2 VOR receivers,
- 2 DME receivers,
- 2 ILS receivers,
- 2 ADF receivers (1 or 2 ADF are optional on A340-500/600).

AUTOMATIC TUNING

In normal operation, each Flight Management Guidance and Envelope Computer (FMGEC) automatically tunes its own side receivers via its associated Radio Management Panel (RMP). This is the automatic tuning mode presented in the schematic below.

MANUAL TUNING

In manual tuning mode, the crew uses the RADIO NAV page on the CAPT or F/O MCDU. The manual settings are sent to the corresponding receivers via the FMGECs and the RMPs. When MCDUs 1 and 2 are ON, it is not possible to use MCDU 3 for manual tuning.

MCDU SWITCHING

If one MCDU has failed and has been set to OFF, the third MCDU will take over. If the CAPT and F/O MCDUs are set to OFF, MCDU 3 operates as the CAPT MCDU.

FM SWITCHING

In case of failure of a single FMGEC, the switching panel can direct the control of all the radio navigation receivers to the remaining FMGEC. If one FMGEC fails, manually switching to the remaining FMGEC must be performed through the Flight Management (FM) rotary switch. The valid FMGEC controls its own side receivers, via its own side RMP and the opposite receivers directly.

BACKUP TUNING

If both FMGECs have failed, the receivers can be manually tuned via the RMPs. This is the backup tuning mode. The CAPT and F/O use their RMPs to control their own side receivers. The ILS course and frequency are the only radio navigation data exchanged (ILS 1 and ILS 2 must be identical).

NOTE: Note: the third RMP does not operate in radio navigation backup mode.

G7508471 - G7OT0T0 - FM34DC000000001

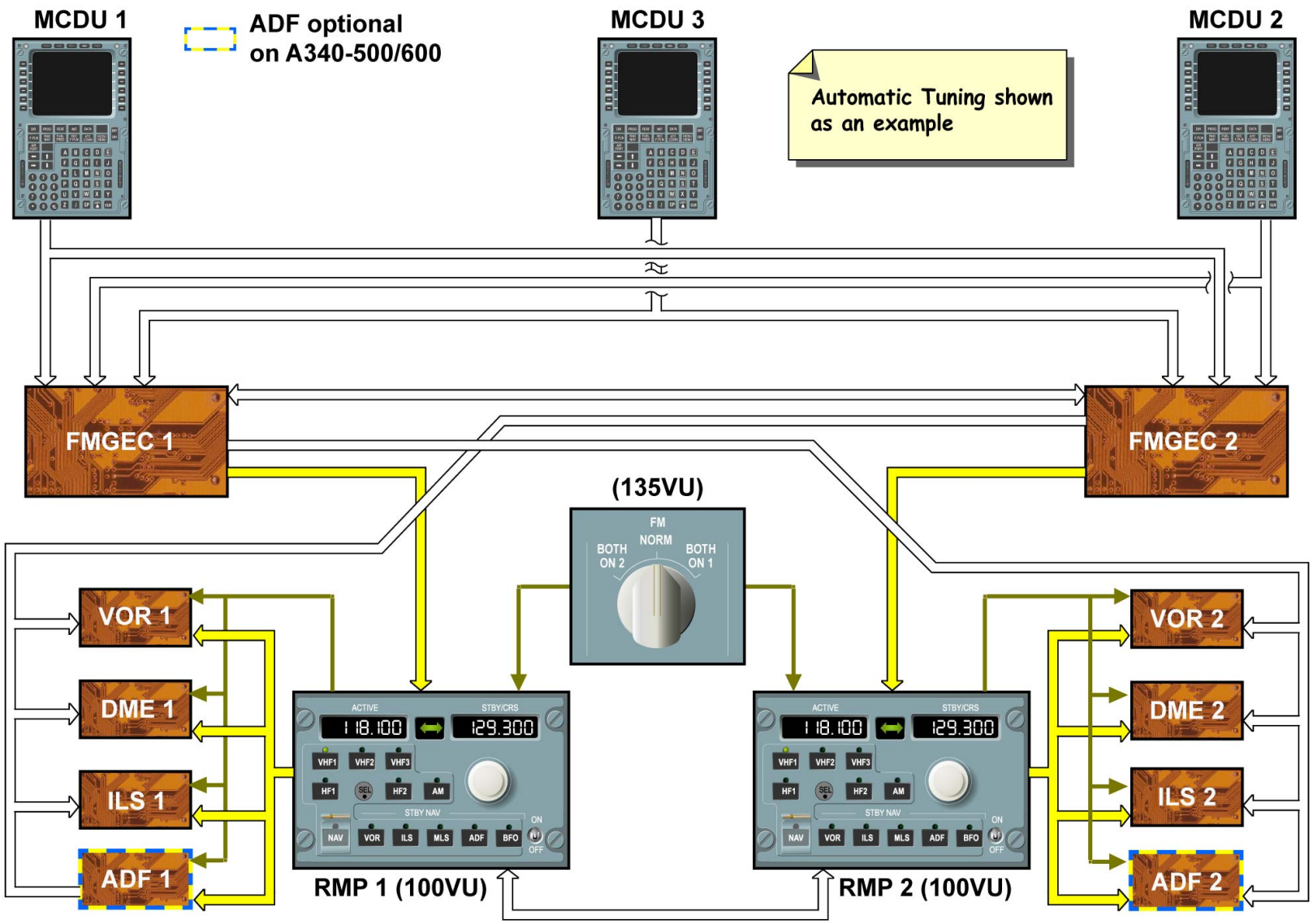

GENERAL ... BACKUP TUNING

G7508471 - G7OT0T0 - FM34DC000000001

ADIRS D/O (3)

ADIRU PRINCIPLE

The Air Data/Inertial Reference Unit (ADIRU) comprises an Air Data Reference (ADR) and an Inertial Reference (IR) both included in a single unit.

SENSOR CONNECTION

The probes are connected to the ADR of the ADIRU.

STATIC PORTS

CAPT and F/O static ports directly provide static pressure to 4 Air Data Modules (ADMs) which convert this pressure into digital format. ADR1 and ADR2 compute the average static pressure value from the left and right ADMs. Standby static ports provide an average pressure directly to the Integrated Standby Instrument System (ISIS) indicator and to a single ADM connected to ADR3.

PITOT PROBES

The three pitot probes directly provide the total pressure to three ADMs. The standby pitot probe also supplies the standby airspeed indicator function of the ISIS indicator.

ANGLE OF ATTACK SENSOR

Each Angle Of Attack (AOA) sensor provides a primary and a backup signal to each ADIRU. In case of failure, the selection is automatically made by the ADIRU. The AOA sensor is equipped with a self-test device which is activated from the MCDU through the ADIRU. The AOA sensors are also called Alpha probes.

TOTAL AIR TEMPERATURE SENSORS

Each Total Air Temperature (TAT) sensor has two independent sensing elements. For the CAPT TAT sensor, sensing elements 1 and 2 are respectively connected to ADR1 and ADR3. For the F/O TAT sensor, only one sensing element is connected to ADR2.

NOTE: Optionally, a specific TAT sensor installed with a tube receives compressed air picked up on the bleed air muscle pressure line manifold. This compressed air induces a suction effect and creates airflow inside the sensor. This type of TAT sensor is used to compensate the solar heating effect on the ground.

WATER DRAIN AND HEATING

The probes are installed in such a way that their pressure lines do not require a water drain except for the stand-by static line. The probe and sensor heating is achieved through the probe heating system.

G7508471 - G7OT0T0 - FM34D100000002

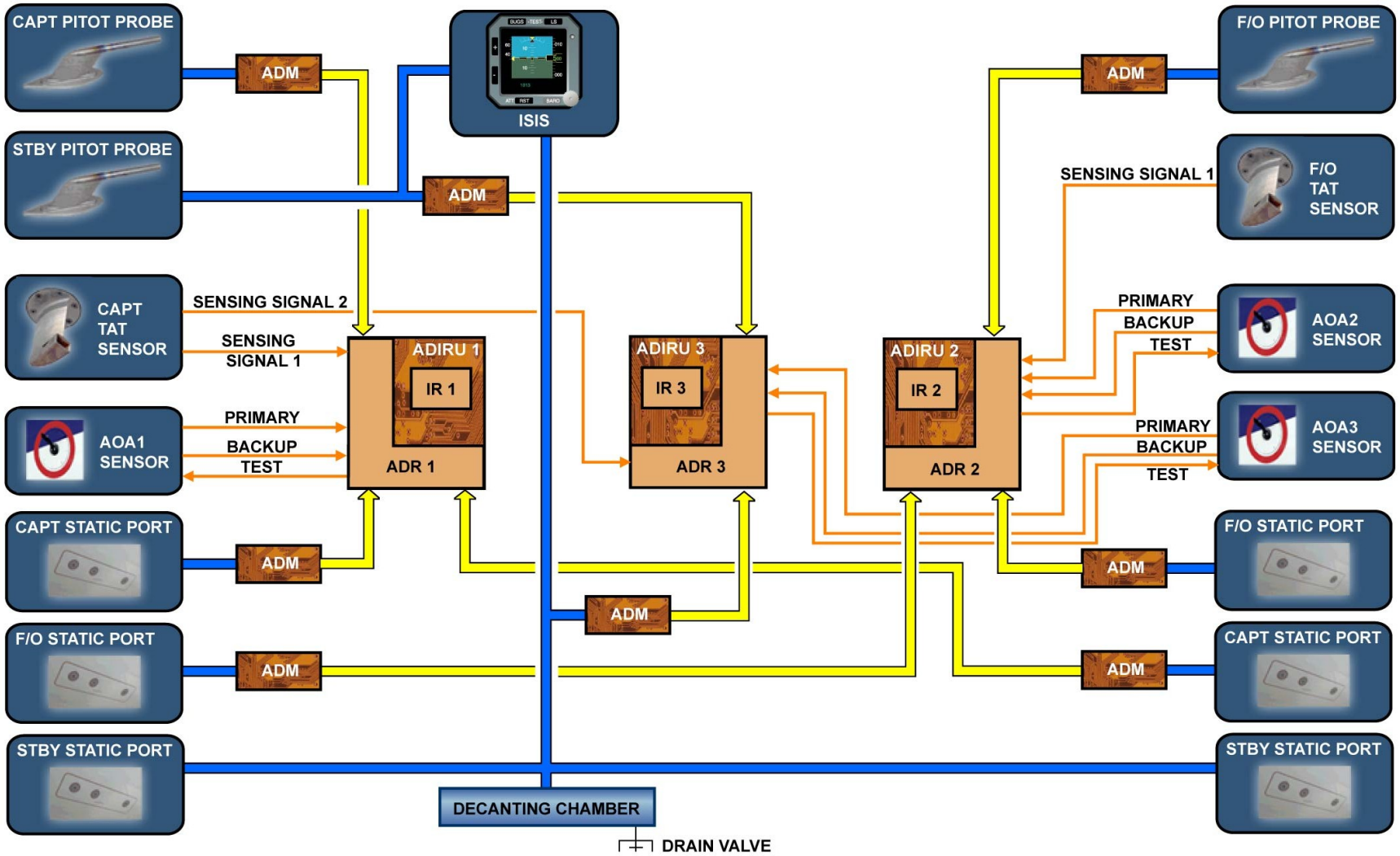

ADIRU PRINCIPLE & SENSOR CONNECTION

G7508471 - G7OT0T0 - FM34D100000002

ADIRS D/O (3)

AIR DATA MODULE

The static and pitot probes are connected with the ADIRU through the ADMs.

ADM INPUTS

The 8 ADMs are identical and the ADIRU provides 13.5V DC to supply each associated ADM. The ADM inputs have one pressure input and several discrete inputs. The discrete inputs determine the ADM location and the type of pressure data (pitot or static) to provide to the ADR.

ADM FUNCTIONAL DESCRIPTION

A microcomputer processes an ARINC signal according to the discrete inputs and to the digitized pressure.

ADM OUTPUT

The ADM output is an ARINC bus, which provides digital pressure information, type of pressure, ADM identification and BITE status to the ADIRU.

ADR COMPUTATION

The ADR processes sensor and ADM inputs in order to provide air data to users.

G7508471 - G7OT0T0 - FM34D100000002

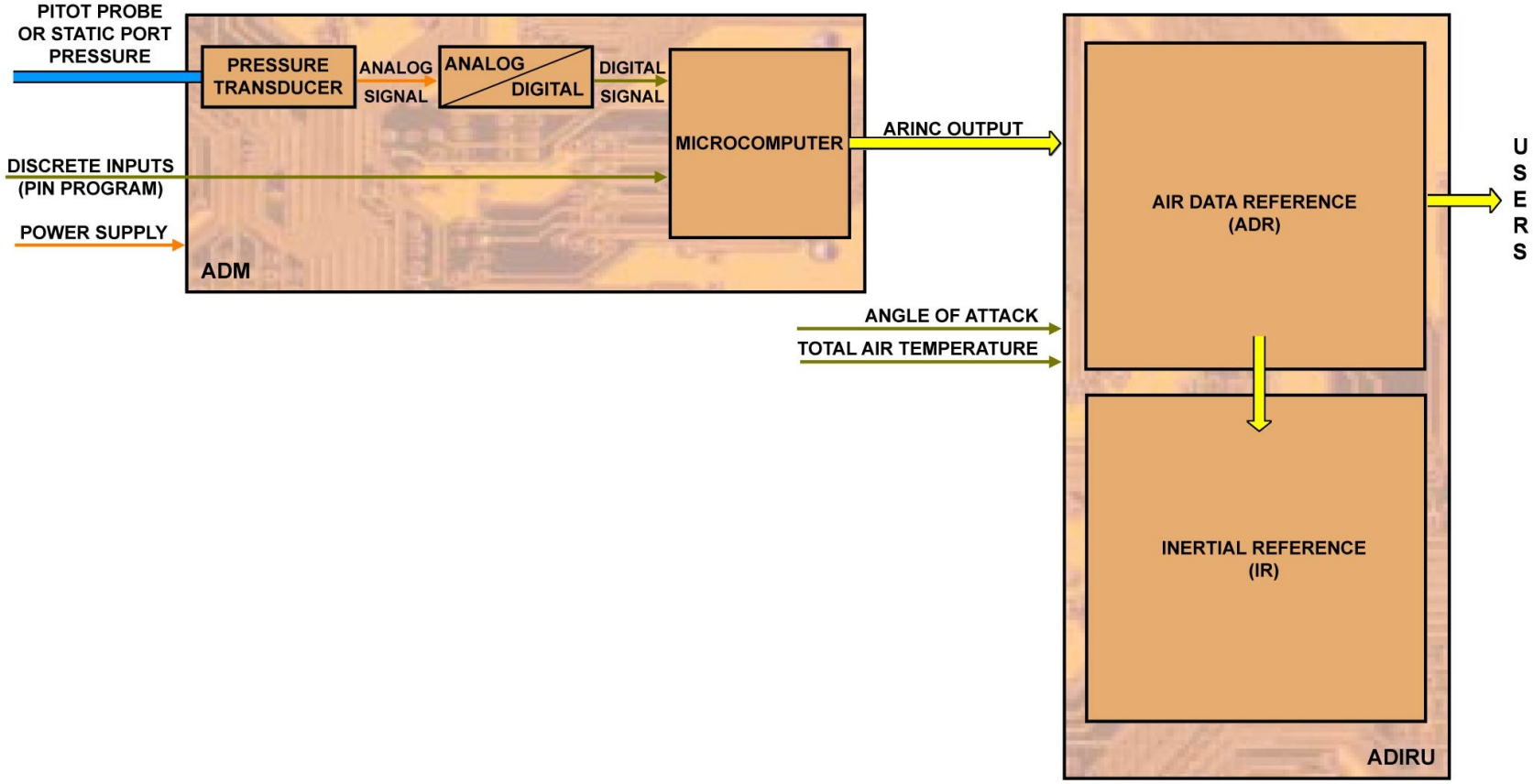

AIR DATA MODULE & ADR COMPUTATION

G7508471 - G7OT0T0 - FM34D1000000002

ADIRS D/O (3)

IR COMPUTATION

Three accelerometers, one for each axis, provide linear accelerations. Three ring laser gyros, provided with two laser beams, circulating into a ring, provide inertial rotation rate for each axis. Each ADIRU provides IR data to users by combining the computation of the signals provided by the laser gyros and the accelerometers outputs.

G7508471 - G7OT0T0 - FM34D1000000002

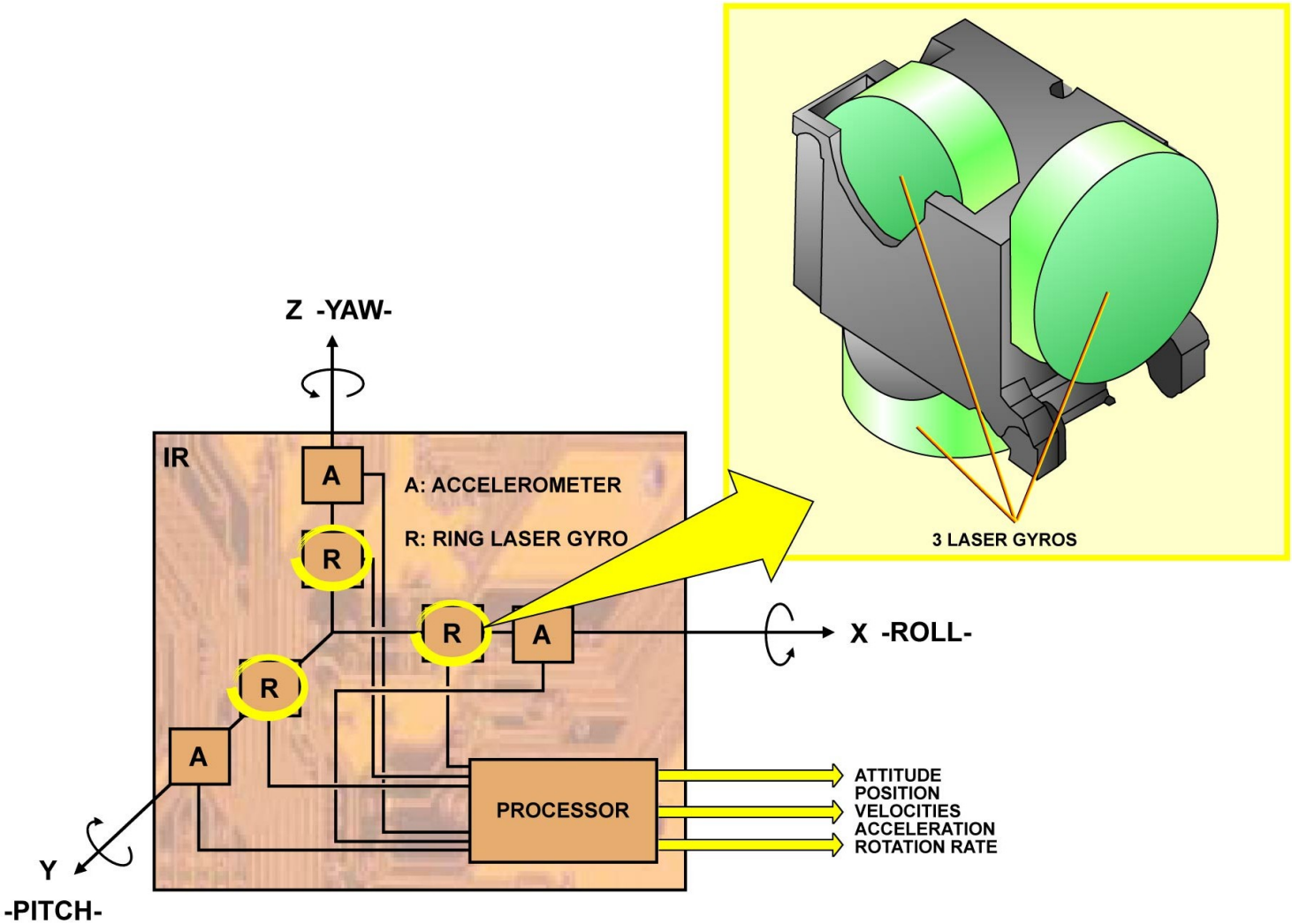

IR COMPUTATION

G7508471 - G7OT0T0 - FM34D1000000002

ADIRS D/O (3)

IR COMPUTATION (continued)

RING LASER GYRO

The three ring laser gyros, one for each rotation axis, provide inertial rotation data and are composed of two opposite laser beams in a ring. At rest, the two beams arrive at the sensor with the same frequency. An A/C rotation creates a difference of frequencies between the two beams. The frequency difference is measured by optical means providing a digital output which, after computation, will provide rotation information.

G7508471 - G7OT0T0 - FM34D1000000002

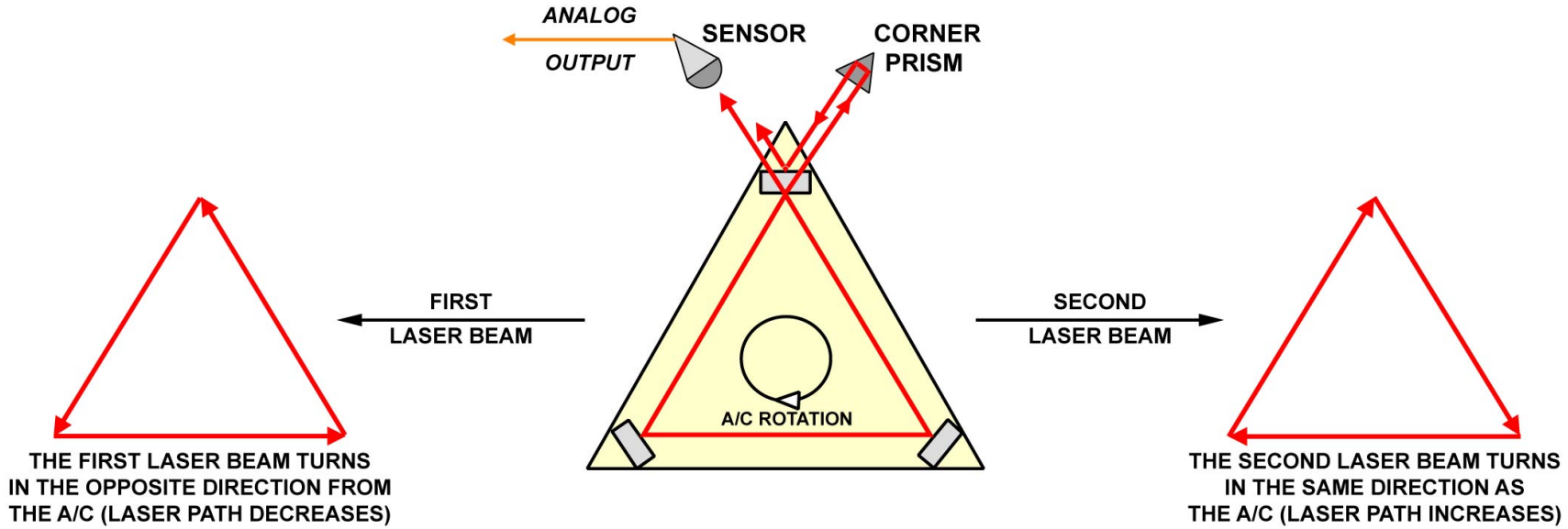

IR COMPUTATION - RING LASER GYRO

G7508471 - G7OT0T0 - FM34D1000000002

ADIRS SWITCHING D/O (3)

PRINCIPLE

The Air Data/Inertial Reference System (ADIRS) is composed of three Air Data/Inertial Reference Units (ADIRUs). Various instruments and systems receive data from the ADIRS such as the PFD, the ND, the ECAM SD for inertial and air data display, via the Display Management Computers (DMCs), or directly for the Digital Distance and Radio Magnetic Indicator (DDRMI).
The ADIRS provides barometric altitude to the mode S of the ATC transponder.
The ADIRS provides data to the Flight Management Guidance and Envelope Computer (FMGEC) for aircraft position computation and for the computation of various characteristic speeds.
The ADIRS provides data to the Weather Radar (WXR) system for antenna attitude stabilization.
Basically, ADIRU 1 is associated with system 1 and the DDRMI, ADIRU 2 with system 2, and ADIRU 3 is in standby.
If an Air Data Reference (ADR) or an Inertial Reference (IR) fails, the AIR DATA or ATTitude HeaDingG selector enables the crew to use ADR 3 or IR 3. The manual switching is mainly performed to recover displays. The computers select their inputs according to the switching for consistency of computation and display.

NOTE: Each FMGEC receives data from the 3 ADIRUs. The switching only concerns characteristic speeds.
The ADIRU data sent to the ECAM SD are Static Air Temperature (SAT), Total Air Temperature (TAT) and International Standard Atmosphere (ISA).

G7508471 - G7OT0T0 - FM34D2F34AE0302

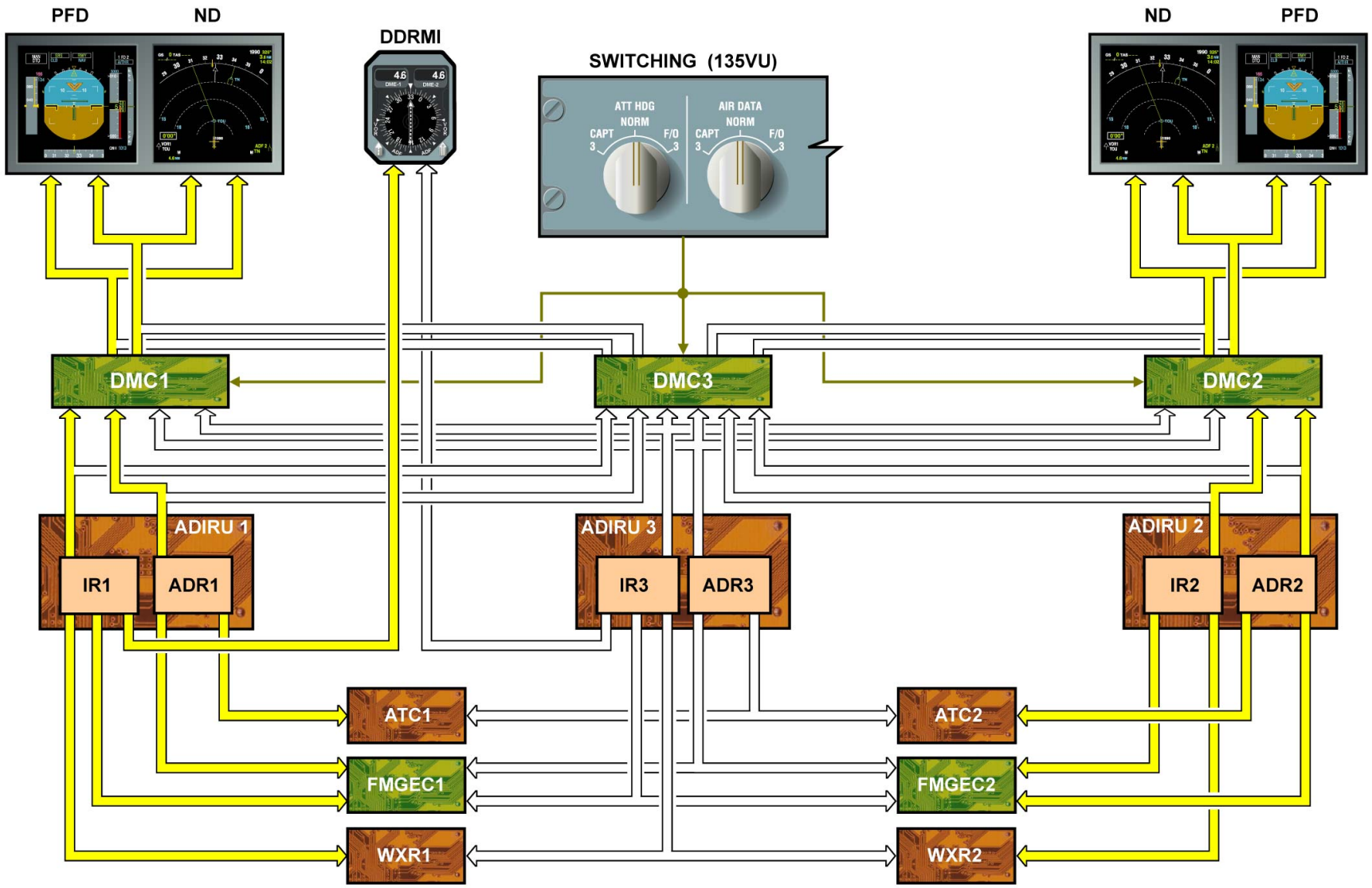

PRINCIPLE

G7508471 - G7OT0T0 - FM34D2F34AE0302

ADIRS SWITCHING D/O (3)

SWITCHING

Here is an example of ADIRS switching IR 1 failed in order to see the effect on the schematic.

G7508471 - G7OT0T0 - FM34D2F34AE0302

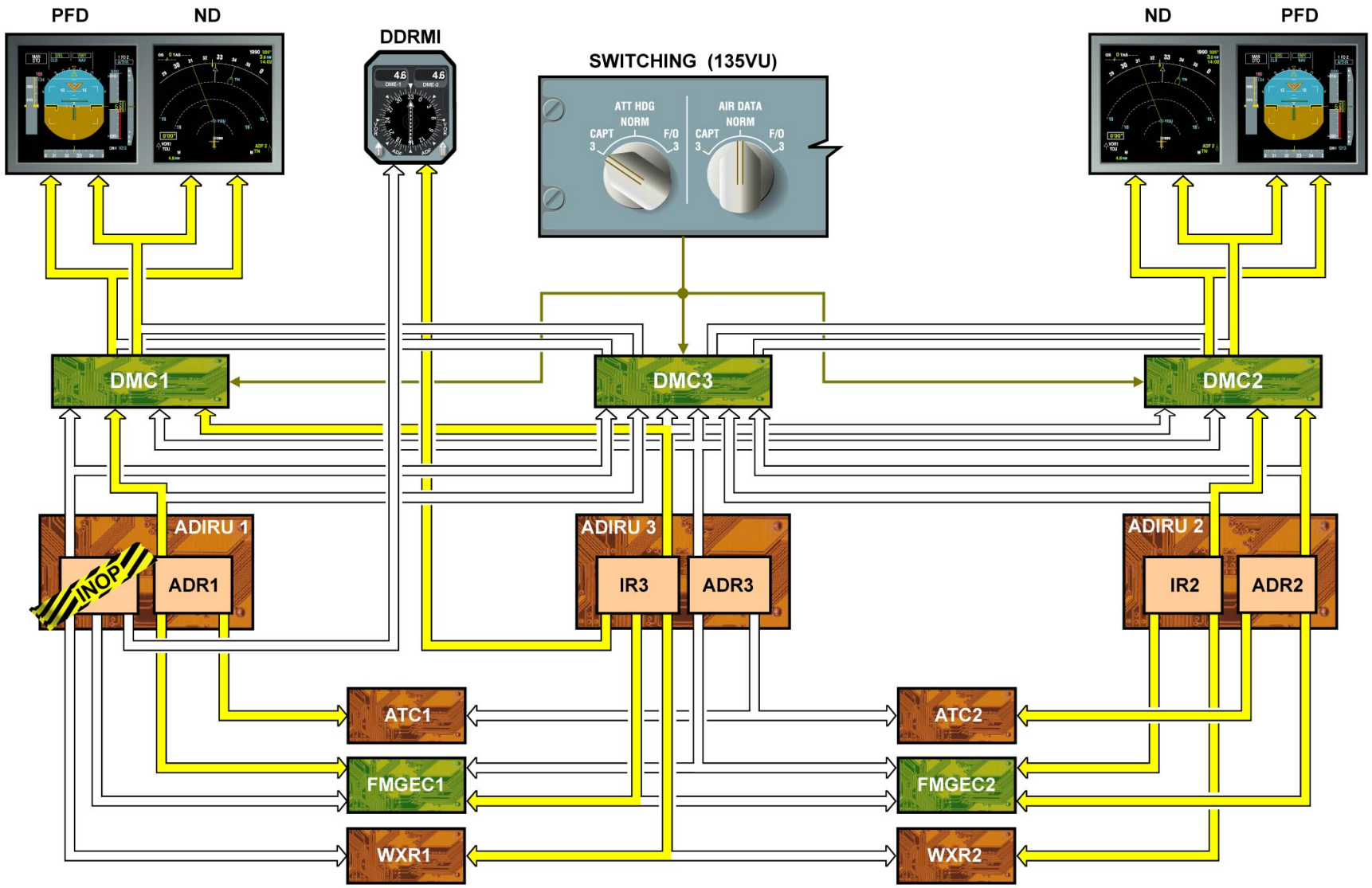

SWITCHING

G7508471 - G7OT0T0 - FM34D2F34AE0302

STANDBY INSTRUMENTS D/O (3)

GENERAL

The aircraft is fitted with a standby compass that displays the magnetic heading, and one Integrated Standby Instrument System (ISIS), which is a combined standby altimeter, horizon indicator and airspeed indicator.
The ISIS displays the following information:
- airspeed,
- mach number,
- pitch and roll angles,
- lateral acceleration,
- altitude in feet (ft),
- Glide Slope (G/S) and LOCalizer deviations,
- BAROmetric reference in hectopascals (hPa).

A light sensor on the ISIS front face automatically controls the display brightness. As soon as the ISIS is energized, it shows the initialization display for 90 s. This display has four yellow boxes indicating ATTitude, SPeeD, ALTitude and INIT 90s.

G7508471 - G7OT0T0 - FM34D300000002

STANDBY COMPASS

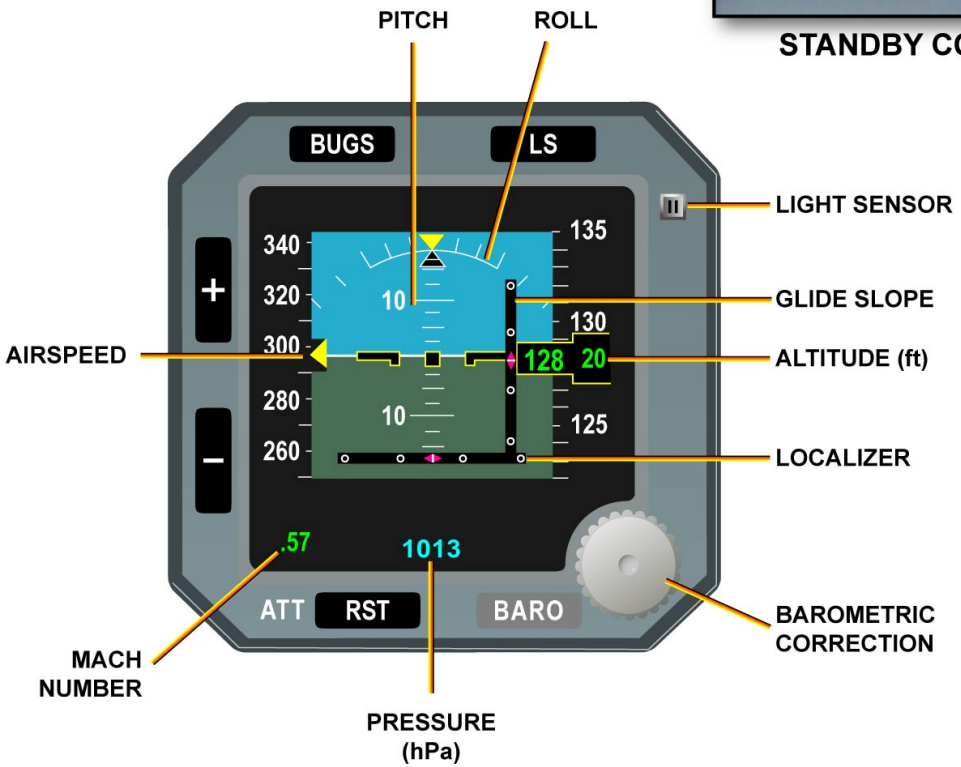

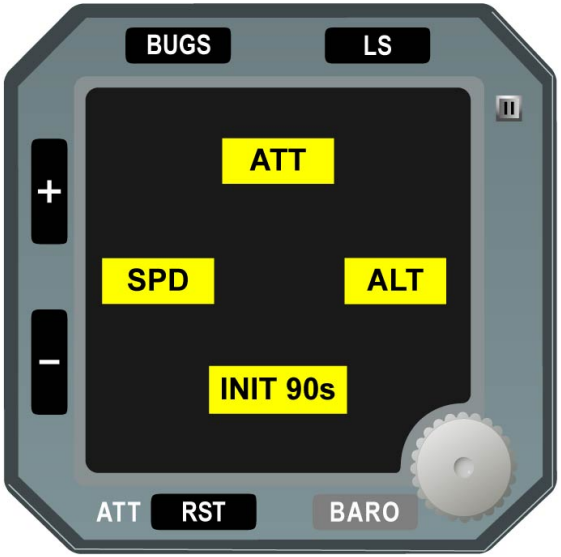

ISIS
(INITIALISATION DISPLAY)

GENERAL

G7508471 - G7OT0T0 - FM34D300000002

STANDBY INSTRUMENTS D/O (3)

STANDBY COMPASS

The standby compass provides the crew with magnetic heading. It consists of a magnetic element rotating freely inside a compass bowl. The compass bowl is immersed in a damping liquid. The magnetic element is linked to a compass card, which moves behind a lubber line and gives the magnetic heading. Rotating the standby compass on its mounting screws can provide a correction of deviation. The upper mounting plate is provided with graduations, which indicate the number of degrees of deviation. A non-magnetic lamp assembly provides illumination of the reading dial. Compensation is achieved by inserting a special key in two holes, marked B and C, located below the graduated mounting plate. In the cockpit, on the center vertical member, a label is installed and provides information on the last calibration of the standby compass.

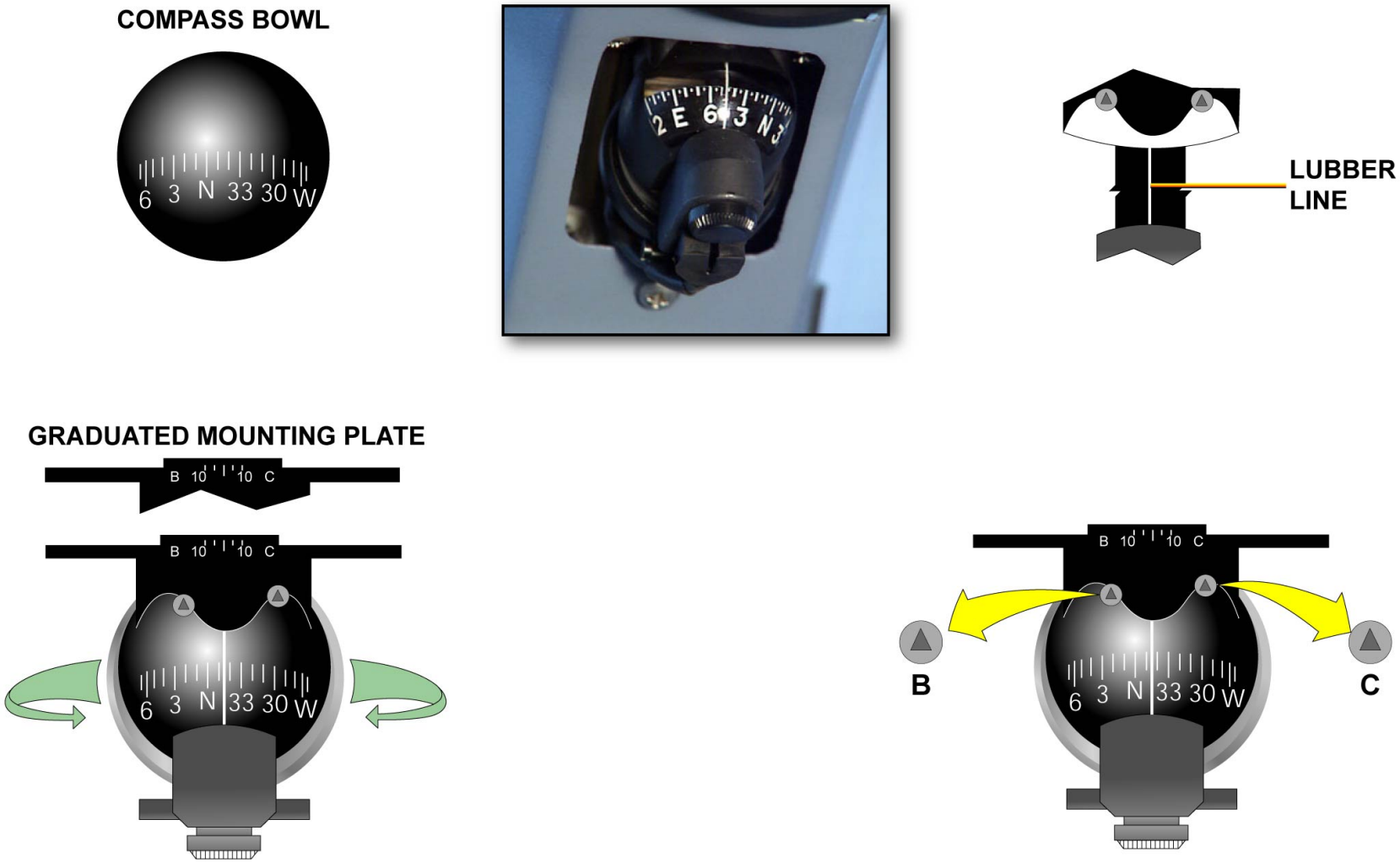

STANDBY COMPASS

STANDBY INSTRUMENTS D/O (3)

ISIS

DESCRIPTION

The back of ISIS is equipped with two pressure connectors:
- one is connected to the standby pitot probe for total pressure acquisition,
- the other one is connected to the combined standby static probes for static pressure acquisition.

The ISIS indicator contains the following subassemblies:
- one pressure module,
- one inertial module,
- one computation module,
- one display module and,
- one interface module.

The pressure module is connected to the total and static pressure connectors. Each pressure line is connected to a pressure sensor in the pressure module. The inertial module is composed of three gyrometers (gyrolaser) measuring angular speeds and two specific linear accelerometers (pitch + roll). The computation module includes a Central Processing Unit (CPU), which calculate the operational parameters (attitude, altitude and airspeed), and a graphic card, which receives the data from the CPU and sent it to the display module. The display module is fitted on the front face of ISIS. It is of the Liquid Crystal Display (LCD) type. The front face is also fitted with several knobs for operation purposes. The interface module is composed of:
- a filtering board linked to an electrical connector at the back of ISIS,
- the 28V DC power supply unit,
- the interface board which links the pressure, inertial, computation and display modules.

POWER SUPPLY

ISIS is supplied with 28V DC from the ESSential BUS bar. In case of loss of this bus bar, the HOT BUS bar automatically takes over, provided the Computed Air Speed (CAS) is greater than 50 kts. In case of a power supply cut-off less than 50 ms, there is no effect on the display.

OPERATION

When ISIS is energized, a delay of 90 seconds is necessary for initialization. ISIS computes and displays own air and inertial parameters. When the airspeed data is not valid, the CAS information is provided as a back-up by Air Data/Inertial Reference Unit (ADIRU) 1 or ADIRU 3 regarding the ATT/HDG selector switch position. The ADIRU also provides a Ground Speed (GS) information for flight/ground condition, as a back-up. A BAROmetric selector knob enables the display and adjustment of the standard barometric pressure in hPa. When the Landing System P/BSW, located on the upper right part of the indicator, is pushed, the G/S and LOC scales come into view. The BUGS P/BSW allows to display the BUGS page. This page is used to program characteristic speeds and altitudes displayed on the related speed and altitude scales. The (-) P/B is used to get access to the next bug and the (+) P/B to return to the previous bug. Air and inertial parameters are processed by the computation module using data from the pressure and inertial modules. The pressure module sends the total and static pressure data while the inertial module sends accelerations and angular rates data. Once computed, the parameters are sent to the display module for indication to the crew. The LS data is sent by the Multi-Mode Receiver (MMR) 1. Air Data/Inertial Reference System (ADIRS) parameters computed by ISIS are sent to the Flight Data Interface and Management Unit (FDIMU). The ISIS can operate from 0 to 600 kts without deterioration of airspeed data. It can operate from -2.500 to 55.000 ft and up to 40.000 ft/min without deterioration of altimeter data. For the horizon data, the ISIS can operate from -180 to +180 deg without deterioration.

G7508471 - G7OT0T0 - FM34D300000002

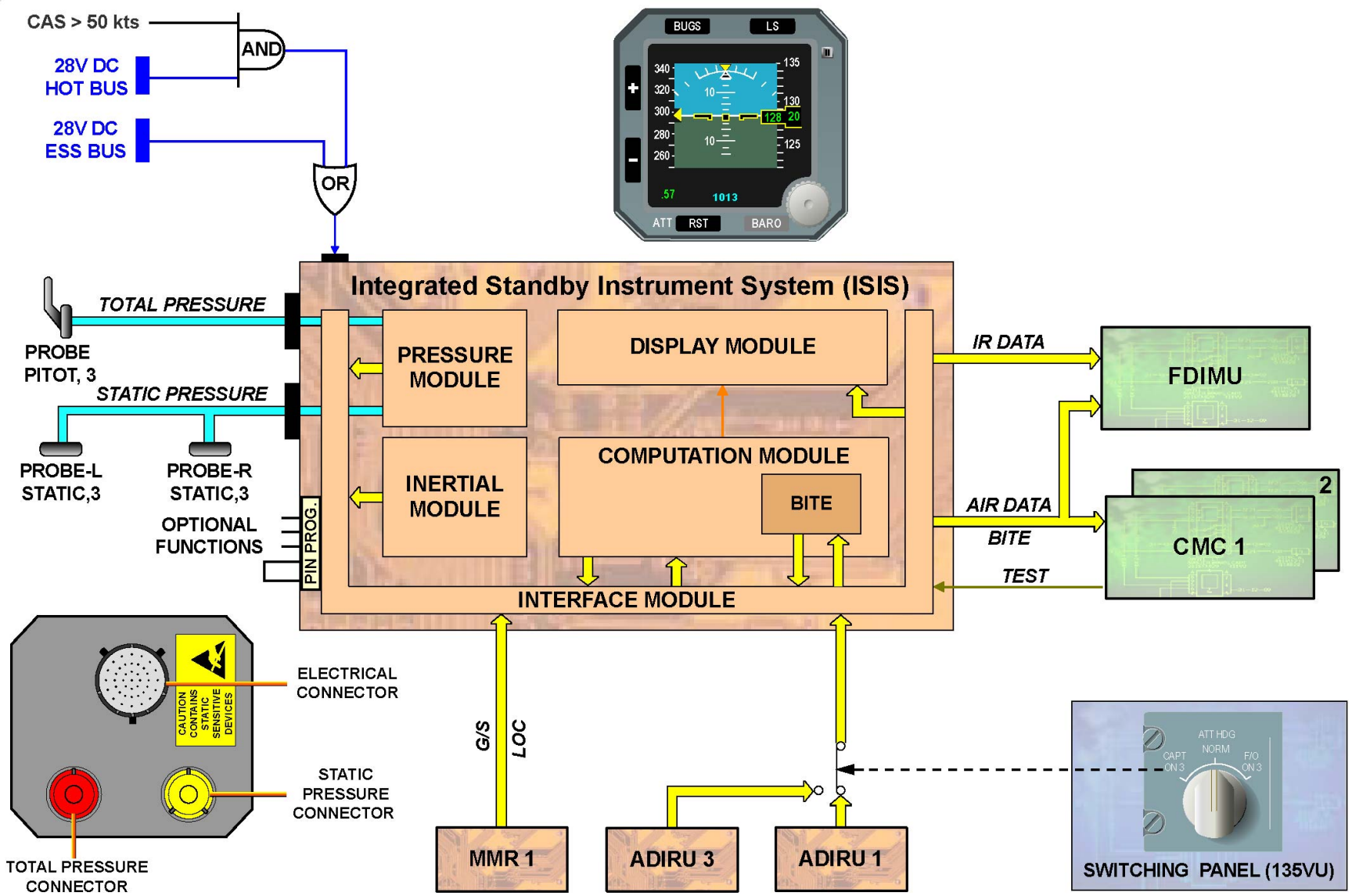

ISIS - DESCRIPTION ... OPERATION

G7508471 - G7OT0T0 - FM34D300000002

STANDBY INSTRUMENTS D/O (3)

ISIS (continued)

OPTIONAL DISPLAYS

Optional functions can be activated through pin programming:
- the metric altitude, which can be displayed in the upper right section of the display in addition to the altitude in feet. In case of negative altitude, the NEG indication is displayed in white just before the metric altitude value.
- the magnetic heading, which is provided by the Inertial Reference (IR) 1 or IR 3. In case of detected failure of the selected ADIRU, a red HDG flag is displayed in place of the magnetic heading scale. If the LS function is selected, the LS bars (LOC and G/S) are displayed in place of the magnetic heading indications.
- the barometric correction value in in.Hg, which is displayed in cyan color in the center lower section of the display area, in addition to the barometric correction value in hPa.
- the V-bar type representation of the A/C.

G7508471 - G7OT0T0 - FM34D300000002

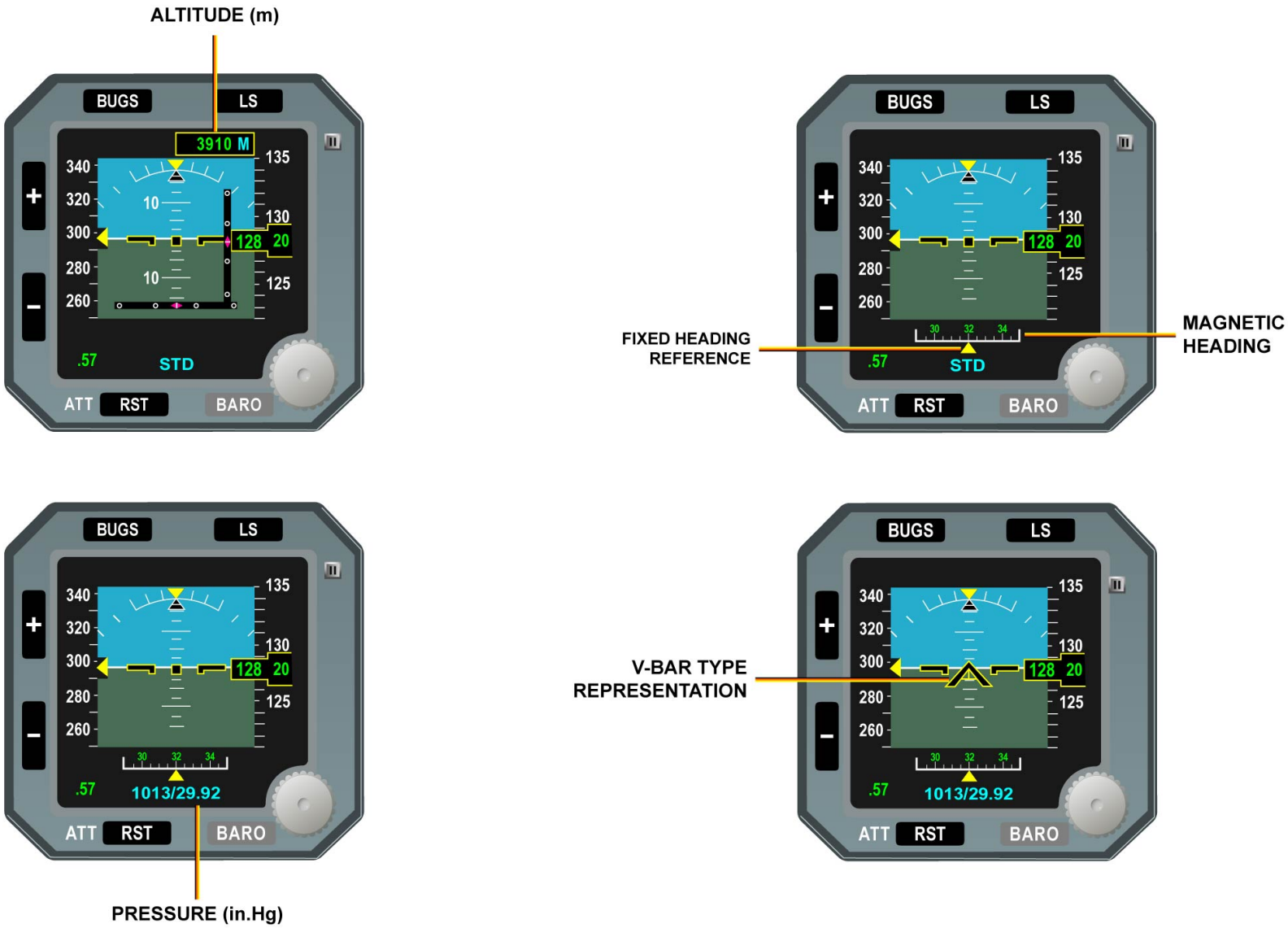

ISIS - OPTIONAL DISPLAYS

STANDBY INSTRUMENTS D/O (3)

ISIS (continued)

ABNORMAL OPERATION

When the airspeed data is not valid, a red SPD flag is displayed in place of the airspeed scale. When the Mach number (always computed) is not valid, a red M flag is displayed in place of the Mach number value. When the altitude data is not valid, a red ALT flag is displayed in place of the altitude scale. In case of detected failure of the pitch and/or roll angle information, the whole attitude and guidance display is replaced by the ATT red flag. LOC and G/S red flags are displayed independently in case of loss of the LOC and/or GS signals. The " WAIT ATT" message appears when the inertial sensors are out of attitude domain (in case of an excessive angular acceleration for gyros and linear acceleration for accelerometers). The normal operational display is automatically retrieved within 10s. The "ATT : RST" message can appear on ground during ISIS alignment phase, or 10s after WAIT ATT when the attitude function is not automatically reset. The ISIS also performs an excessive test motion during the whole initialization phase. If an A/C motion is detected, the attitude information is flagged and the "ATT: RST" message is displayed at the end of the INIT. A manual reset must be performed during stabilized phase (Roll = 0). The attitude reset allows realignment and recovery of the attitude indication. To reset the attitude (Gyrometers and accelerometers), the ATT RST P/B has to be pressed in for at least 2s. "ATT 10s" appears during the reset. A specific MAINT message is also displayed during power-up if an invalid pin configuration is detected. One discrete output is used for fault/healthy indication. In case of a fatal failure of the ISIS, the red OUT OF ORDER message associated with the related fault code is shown.

G7508471 - G7OT0T0 - FM34D300000002

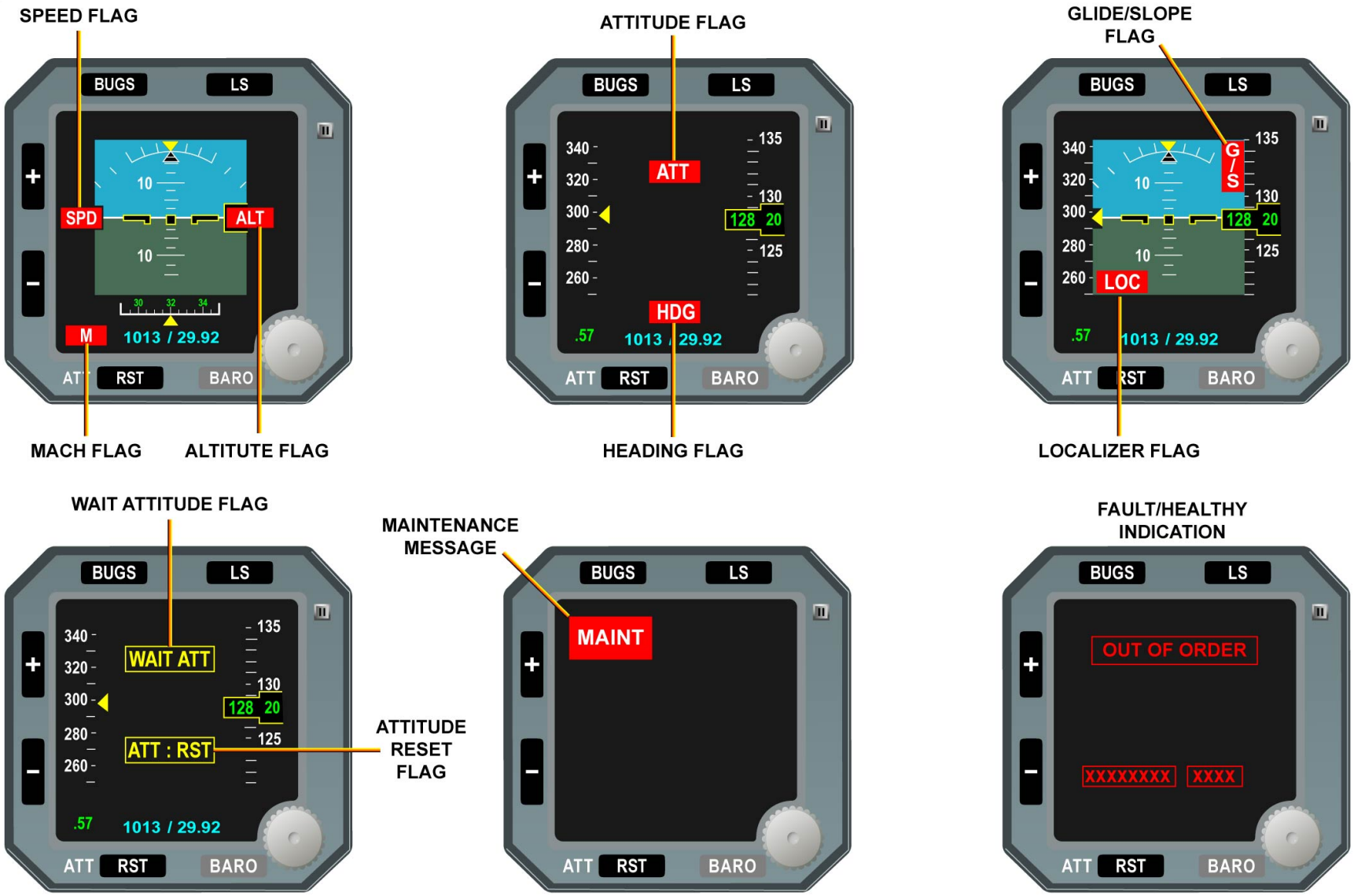

ISIS - ABNORMAL OPERATION

G7508471 - G7OT0T0 - FM34D300000002

STANDBY INSTRUMENTS D/O (3)

ISIS (continued)

MAINTENANCE OPERATION

ISIS is a type II equipment and is fitted with a BITE. The ISIS indicator is able to display maintenance data when the BUGS and LS P/Bs are pushed simultaneously at least 2 s. In this case, a menu with two items is shown on screen: TESTS and OTHER DATA. The P/Bs adjacent to these items give access to the related menus. The TESTS menu gives access to the FUNCTIONAL TEST and DISPLAY TEST, which enable the LCD state quality to be checked and the functional test of ISIS to be started. In case of fault detection, a fault message is displayed and ISIS sends the information to the Central Maintenance Computers (CMCs). The OTHER DATA menu is made of two items: LRU IDENT and ENGINEERING DATA. When the (+) P/B next to the LRU IDENT item is pushed, the display shows the:
- ISIS Part Number (PN) and the Serial Number (SN),
- A/C configuration (active options),
- functional time counter (operating hours).

When the (-) P/B next to ENGINEERING DATA is pushed, the display shows the:
- ATA reference and time,
- component identification and Functional Item Number (FIN),
- failure code data.

If there is more than one data page, pushing the (+) or (-) P/Bs enables to go to the next or previous data pages. Pushing the RST P/B enables to return to the previous menu page. Pushing the RST P/B several times restores the operational display.

NOTE: The ISIS has an internal flight/ground logic, which manages the BITE function and prevents maintenance mode activation in flight. The test is inhibited when the CAS is greater than 100 kts.

G7508471 - G7OT0T0 - FM34D300000002

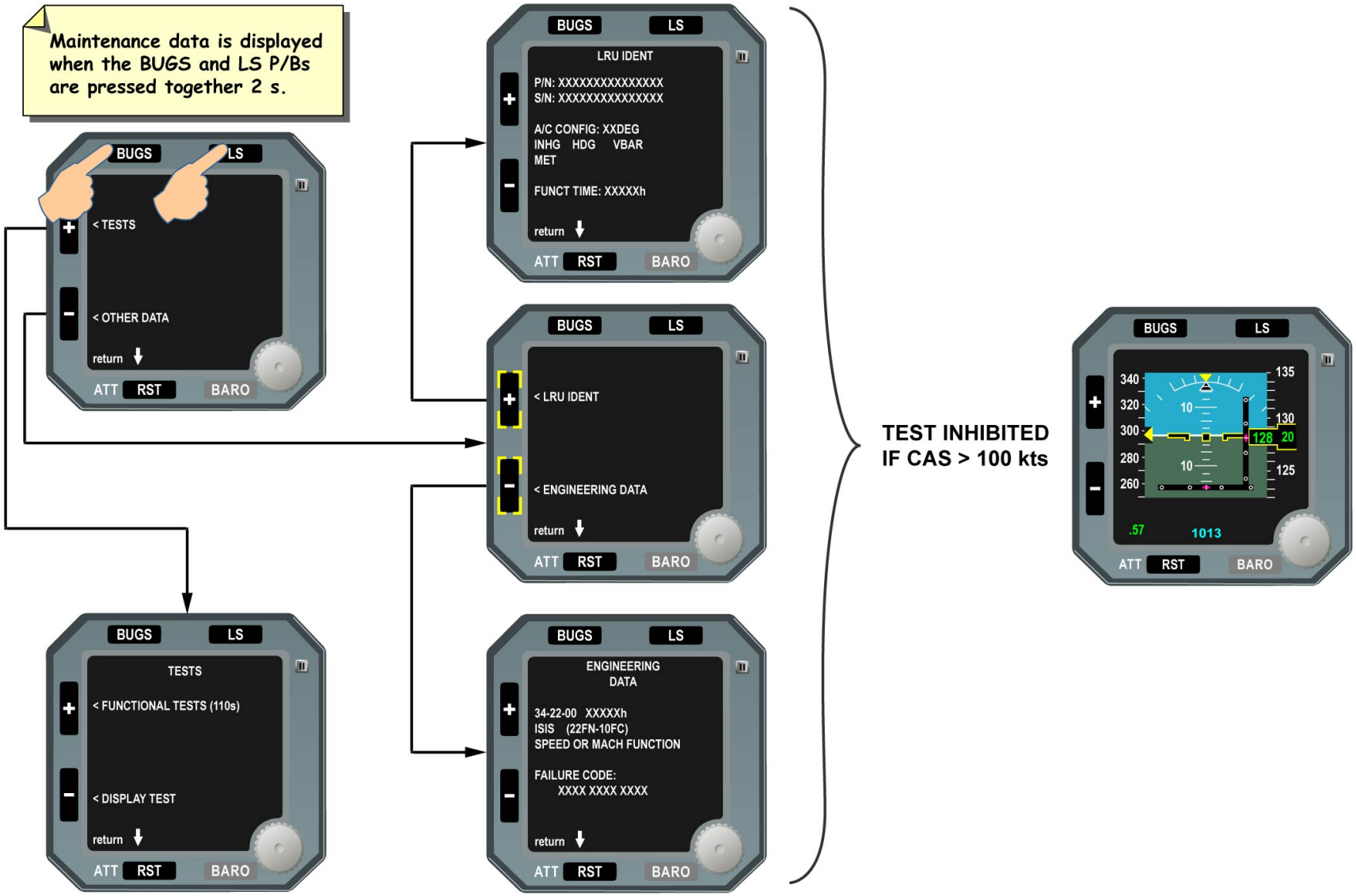

ISIS - MAINTENANCE OPERATION

G7508471 - G7OT0T0 - FM34D300000002

SATELLITE NAVIGATION D/O (3)

GLOBAL POSITIONING SYSTEM FUNCTION

The GPS function is a stand-alone satellite navigation sensor utilizing the coarse acquisition code of the NAVSTAR GPS satellites. The GPS has twelve channels, each capable of tracking NAVSTAR GPS satellite signals. The GPS primary function is to track the radio frequency signal received from the antenna, determine the signal code phase and carrier phase, compute the A/C position and output the navigation data to the three Air Data Inertial Reference Units (ADIRUs).
The GPS antenna is an L-band active antenna. It is designed to operate at 1575.42 MHz with a RH circular polarization and to provide an omnidirectional radiation pattern.

AIR DATA INERTIAL REFERENCE UNIT

In normal operation, the GPS 1 data is used by ADIRUs 1 and 3 and the GPS 2 data by ADIRU 2. In order to reduce GPS initialization time, ADIRUs 1 and 2 respectively send data to GPS 1 and 2 such as Inertial Reference (IR) position, altitude, date and Universal Time Coordinated (UTC).

FLIGHT MANAGEMENT GUIDANCE AND ENVELOPE COMPUTER

The IR portions of ADIRUs 1 and 2 respectively provide Flight Management Guidance and Envelope Computers (FMGECs) 1 and 2 with pure IR data, hybrid global positioning inertial reference data used by the FMGEC for position-fixing purposes called GPIRS position and pure GPS data which is displayed on the MCDU, in this case operating the ADIRU as a relay.
In case of failure of one GPS the three ADIRUs automatically select the only operative GPS to compute hybrid global positioning inertial reference data (GPIRS position).

ATT/HDG SWITCHING

In case of failure of ADIRU 1, FMGEC 1 uses ADIRU 3 / GPS 1 data and in case of failure of ADIRU 2, FMGEC 2 uses ADIRU 3 / GPS 2 data.
The primary source of ADIRU 3 being GPS 1, it is necessary to select the secondary input port of ADIRU 3 (GPS2) by means of the ATT/HDG selector switch to keep side 1/side 2 segregation (GPS1/ADIRU1/FMGEC1 and GPS2/ADIRU3/FMGEC2 architecture).

MONITORING

The GPSs are monitored by the three ADIRUs using the status word sent by each GPS and the BITE of the IR portion.
In case of GPS failure, the NAVGPS 1(2) FAULT message is displayed in the lower part of the EWD. This message is accompanied by an activation of the MASTER CAUTion lights on the glareshield, and an aural warning that is a Single Chime (SC) (level 2 alert).

INDICATING

The GPS data is displayed on the GPS monitor page of the MCDU through the FMGEC and operational messages may be displayed on the NDs.
The data displayed on the MCDU is:
- GPS position given by the latitude and longitude,
- true track,
- figure of merit given in meters,
- ground speed,
- GPS altitude,
- mode and number of satellites tracked.

CENTRAL MAINTENANCE COMPUTER

The MCDUs allow the system to be tested via the Central Maintenance Computer (CMC). The tests are only available on ground.

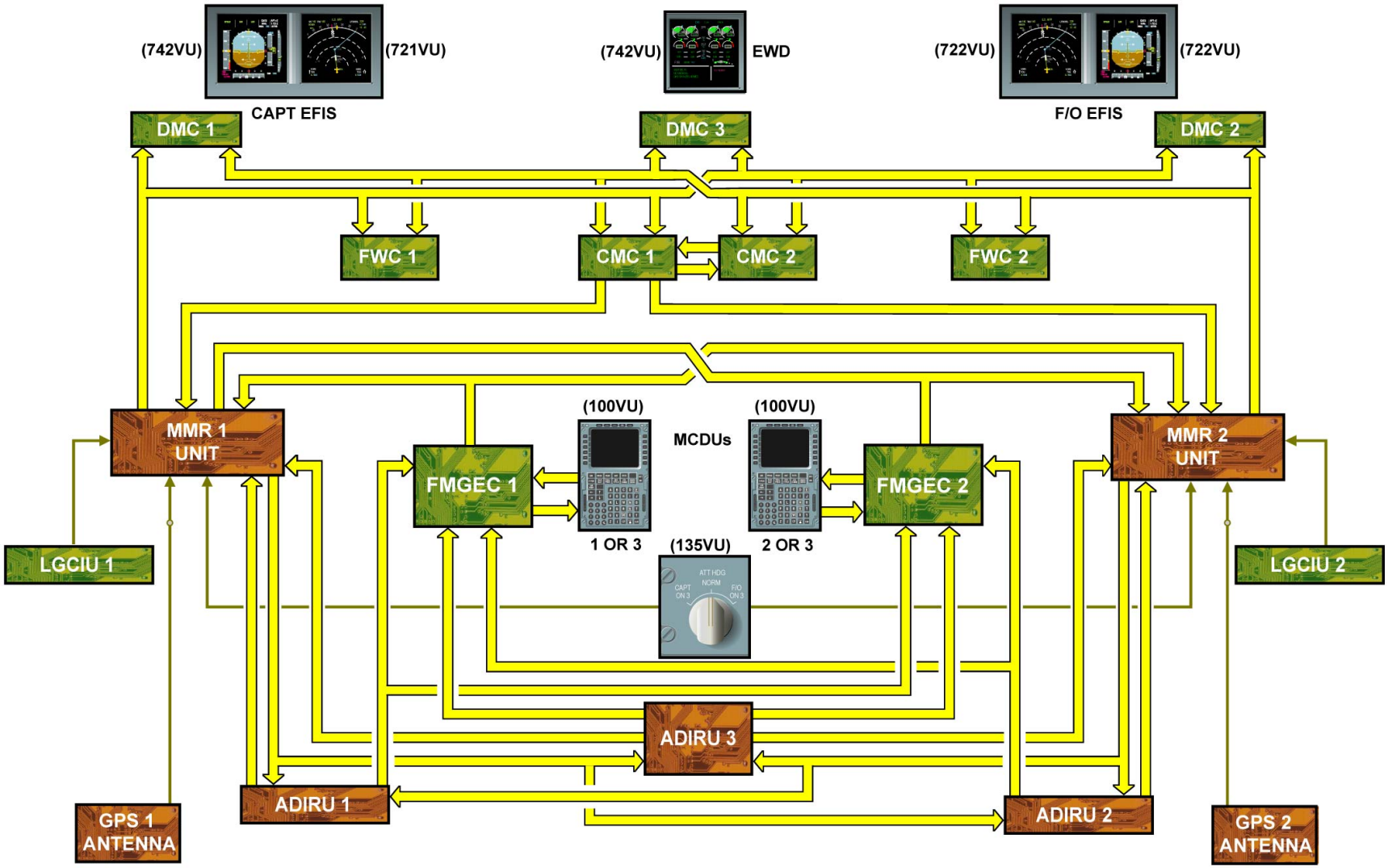

GLOBAL POSITIONING SYSTEM FUNCTION & AIR DATA INERTIAL REFERENCE UNIT

G7508471 - G7OT0T0 - FM34D4F34JB0102

MMR D/O (3)

MMR

The aircraft has two Multi Mode Receivers (MMRs). The MMR is a single navigation receiver that includes two internal receivers:
- an ILS receiver,
- a GPS receiver.

The primary function of the MMR is to receive and process ILS and GPS signals.

G7508471 - G7OT0T0 - FM34DD000000001

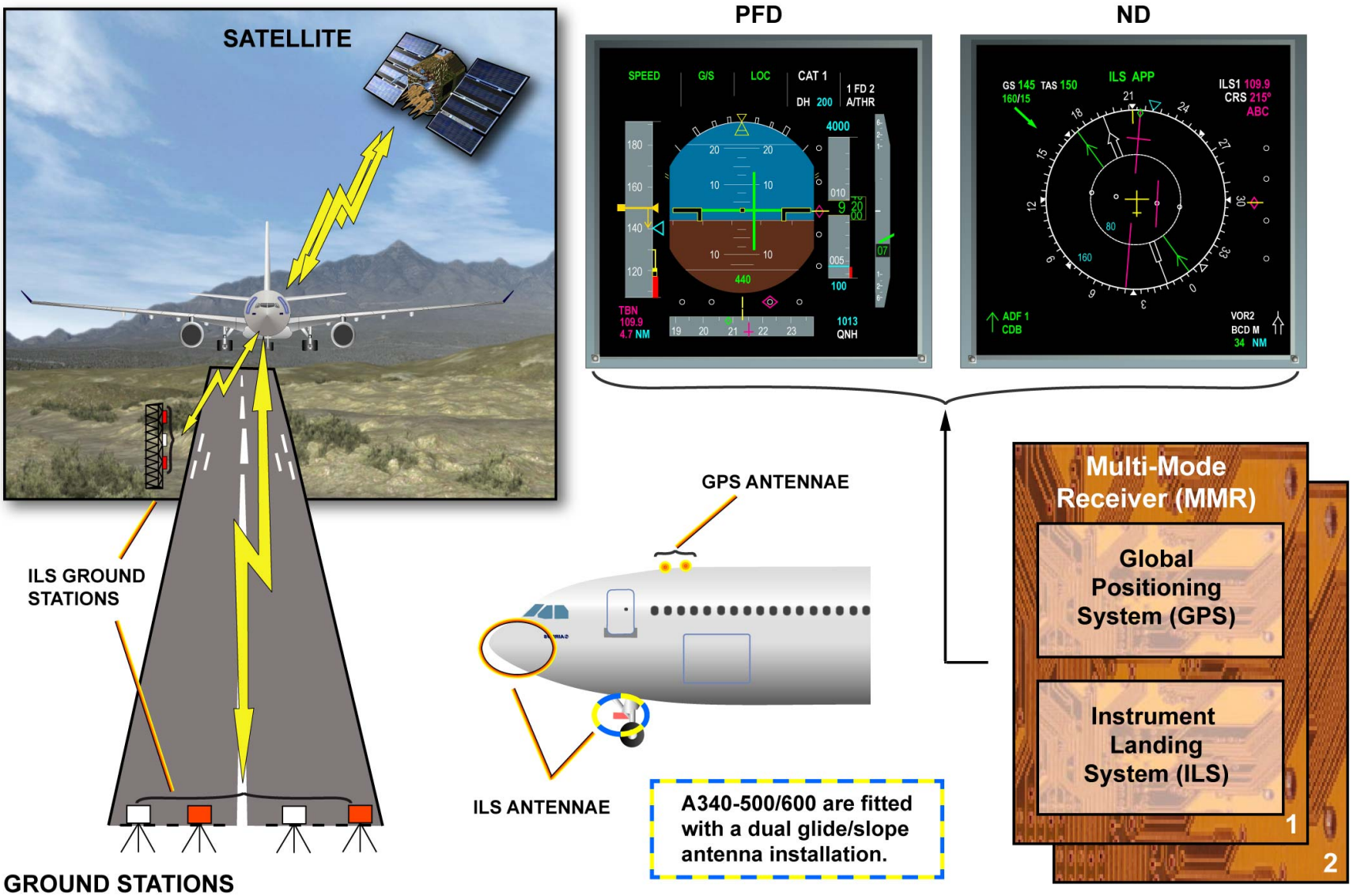
SATELLITE
PFD
ND
SPEED
G/S
LOC
CAT 1
DH 200
1 FD 2
A/THR
TBN
109.9
4.7 NM
1013
QNH
GS 145 TAS 150
160/15
ILS APP
ILS1 109.9
CRS 215°
ABC
ADF 1
CDB
VOR2
BCD M
34 NM
ILS GROUND STATIONS
GROUND STATIONS
GPS ANTENNAE
ILS ANTENNAE
A340-500/600 are fitted with a dual glide/slope antenna installation.
Multi-Mode Receiver (MMR)
Global Positioning System (GPS)
Instrument Landing System (ILS)
1
2

MMR

MMR D/O (3)

ILS FUNCTION

The ILS function is to provide the crew and airborne system users with lateral (LOCalizer (LOC)) and vertical (Glide Slope (G/S)) deviation signals, with respect to the approach ILS radio beam transmitted by ground stations.

AUTO TUNING

In normal operation each Flight Management Guidance and Envelope Computer (FMGEC) automatically tunes its ownside ILS receiver through its ownside Radio Management Panel (RMP).

MANUAL TUNING

Each MCDU allows the ownside ILS receiver to be manually tuned through the ownside FMGEC and the opposite ILS receiver to be tuned through the opposite FMGEC.

FM SWITCHING

If an FMGEC failure occurs, a discrete, generated by the Flight Management (FM) switching, changes the tuning port of the associated ILS receiver, so that it can be directly tuned by the opposite FMGEC.

BACK-UP TUNING

If both FMGECs fail, each RMP allows its ownside receiver to be directly tuned.
If at least one FMGEC is valid, when the standby NAV is activated, the RMP sends a discrete to the FMGECs to inhibit the FMGEC auto and manual tuning as well as the MCDU radio NAV page display.
The ILS data is exchanged between the RMPs if both are in NAV configuration.

ANTENNAE

The two G/S and the LOC antennae are common to both receivers. Each antenna has two independent connectors, used for feeding the two ILS receivers.
Only one of the signal source of both G/S antennae is used by the Multi-Mode Receivers (MMRs). The Radio Frequency (RF) relays allow the selection of either:
- the capture antenna, which is used by the MMR receivers to compute the glide deviation when the NLG is not extended and according to other conditions,
- the track antenna, which is used by the MMR receivers to compute the glide deviation when the NLG is extended and according to other conditions.

NOTE: Note: the track antenna is installed on the A340-500/600 only.

The selection of the G/S antenna is based on two discrete inputs:
- the Landing Antenna Select (LAS) input,
- the Functional Test (FT) input.

These two discrete inputs, provided by the FMGECs, inform the MMR receivers about the same type of information, i.e. the NLG extension status combined with conditions as, for instance, the radio-altimeter altitude. According to the state of these discretes, the MMRs command their corresponding RF relay switches on the proper G/S antenna and accordingly inform the MMRs through a VHF Antenna Select Acknowledge (VASA) discrete.

NOTE: Note: the glide capture antenna and the glide track antenna operate in the 329-335 Mhz range. The LOC antenna operates in the 108-112 Mhz range.

LGCIU

Each Landing Gear Control and Interface Unit (LGCIU) sends discrete signals to the associated ILS receiver. This ground / flight information is used by the receiver BITE module to count the flight legs.

INDICATING

The ILS data is sent to the displays through the Display Management Computers (DMCs). The ILS 1 data is sent to the CAPT PFD and F/O ND, while the ILS 2 data is sent to the F/O PFD and CAPT ND.
The ILS audio signal is processed by the receivers and sent to the Audio Management Unit (AMU) and can be heard by the crew.

USERS

The ILS data is sent to the FMGEC for A/C guidance during take-off, approach and landing phases. This data is also sent to the ECAM via the Flight Warning Computers (FWCs). The ILS1 data is sent to the Enhanced Ground Proximity Warning System (EGPWS).

CMC

The MCDUs allow the system to be tested via the Central Maintenance Computer (CMC). The tests are only available on ground.

G7508471 - G7OT0T0 - FM34DD000000001

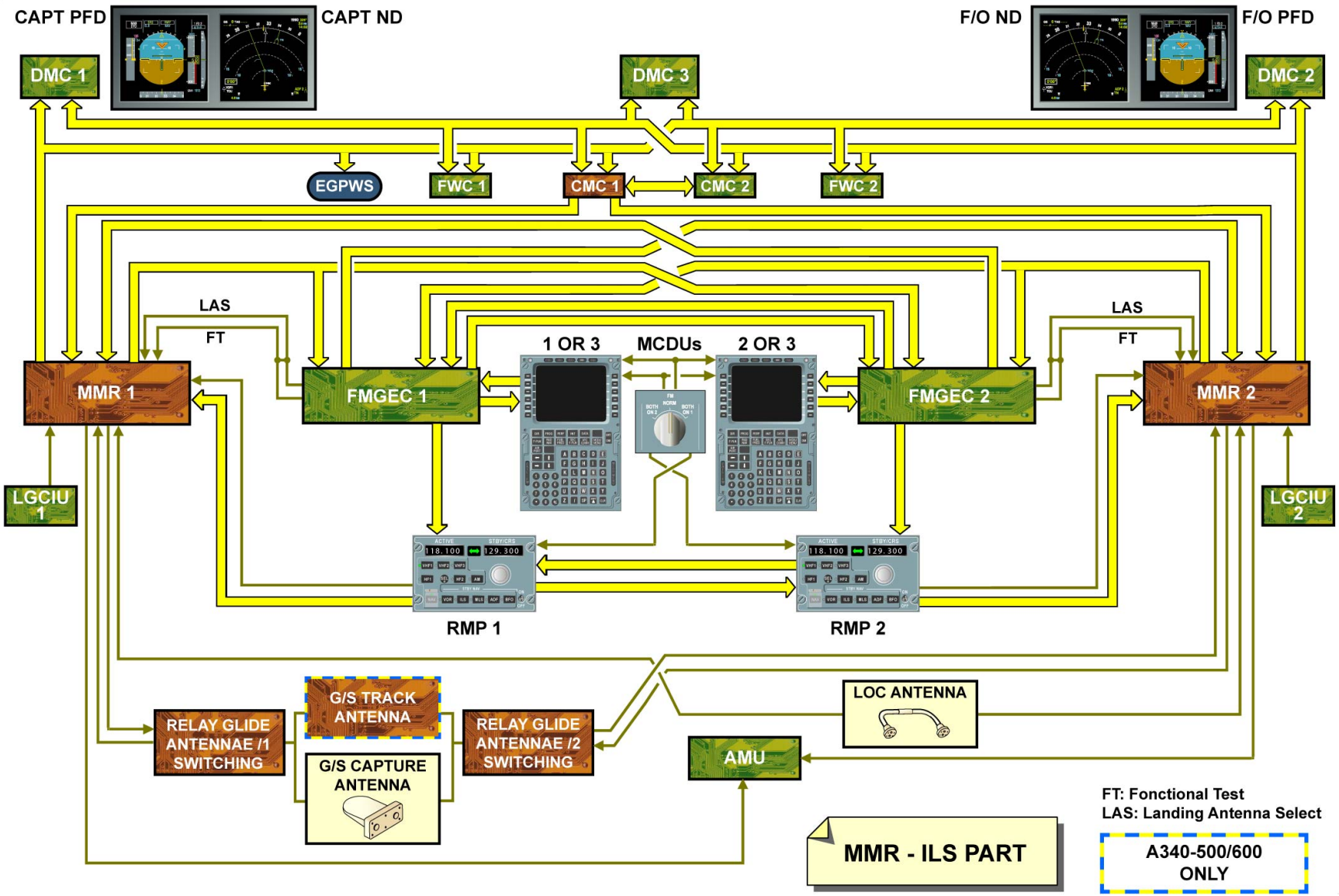

ILS FUNCTION - AUTO TUNING ... CMC

G7508471 - G7OT0T0 - FM34DD000000001

This Page Intentionally Left Blank

G7508471 - G7OT0T0 - FM34DD000000001

MMR D/O (3)

GPS FUNCTION

GPS OPERATION

The GPS function is achieved by two stand-alone satellite navigation receivers using the US GPS satellites constellation. The GPS primary function is to track the Radio Frequency (RF) signals received from the satellites, to compute its own position and to provide the GPS data to the FMGCs through the three Air Data/Inertial Reference Units (ADIRUs). Receiver Autonomous Integrity Monitoring (RAIM) or Autonomous Integrity Monitoring Extrapolation (AIME) provides integrity and availability of this data. The GPS function provides three-dimensional aircraft position, velocities and exact time used for hybrid computation
s by the three ADIRUs. In case of failure of one GPS function, the ADIRU automatically selects the only operative GPS function to compute hybrid GP-IRS data.
The GPS basically provides the ADIRUs with: position, altitude, and ground speed. The ADIRUs send pure inertial position, pure GPS position, and a mixed inertial/GPS position to the FMGEC which uses this data to compute the aircraft present position.

ANTENNAE

The GPS antenna is an L-band active antenna, with an integrated preamplifier and filter, providing an omni-directional upper hemispheric coverage. The GPS antenna operates at a frequency of 1575.42 MHz called L1. A second frequency of 1227.6 MHz, called L2, is used to estimate the propagation error of L1 and to suppress it.

USERS

- ADIRU: ADIRU 1and 3 gets its data from MMR 1 and ADIRU 2 gets its data from MMR 2 under normal conditions. In case of a MMR/GPS failure the ADIRU automatically selects the available MMR/GPS input.
- CLOCK: Receives GPS time and date information.
- ATSU: Receive GPS time and date.

G7508471 - G7OT0T0 - FM34DD000000001

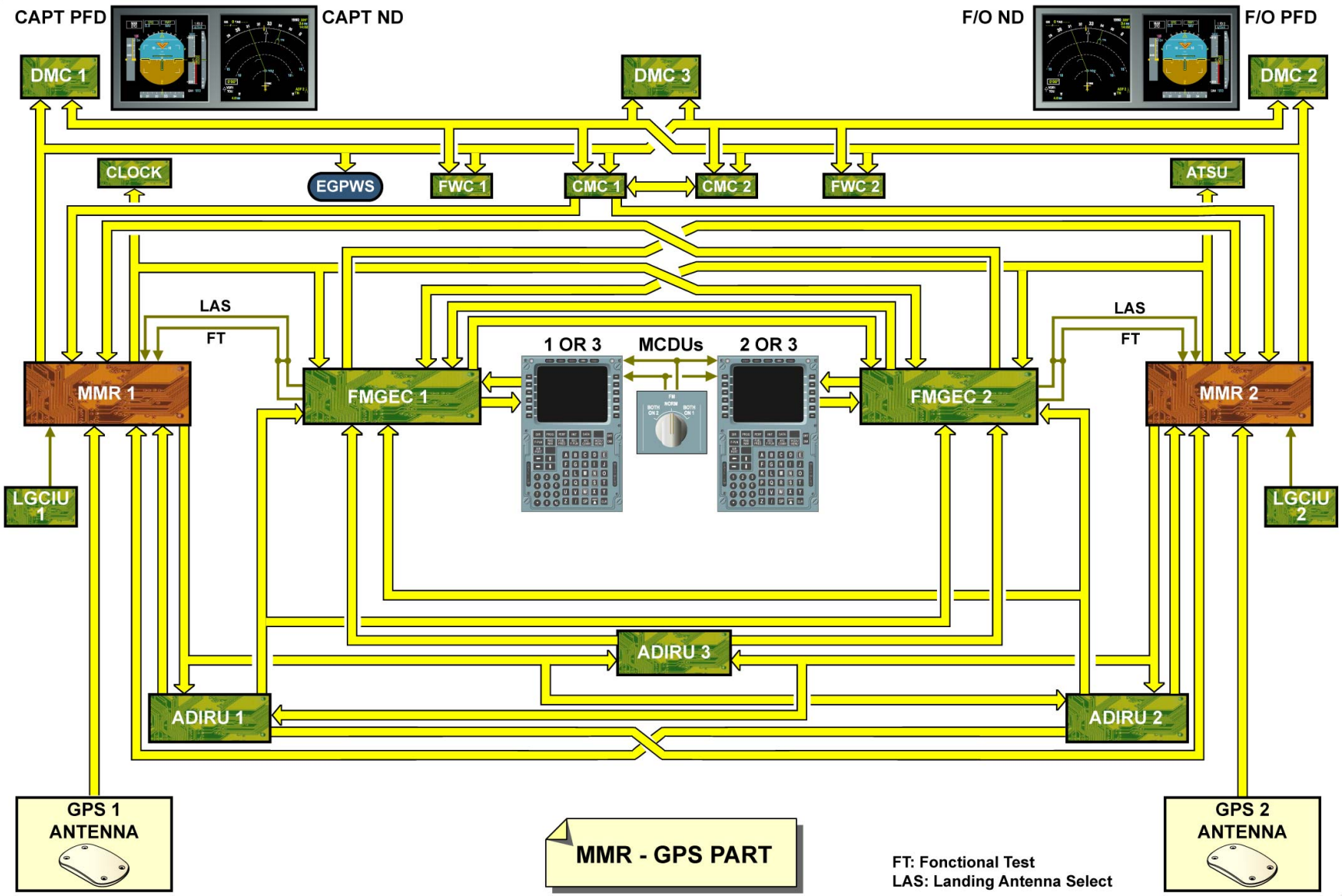

GPS FUNCTION - GPS OPERATION ... USERS

G7508471 - G7OT0T0 - FM34DD000000001

MMR D/O (3)

MAINTENANCE OPERATION

The MMR is fitted with a BITE which detects and identifies failures. The MMR is connected to the Central Maintenance Computer (CMC) for onboard testing and fault reporting purposes.

G7508471 - G7OT0T0 - FM34DD000000001

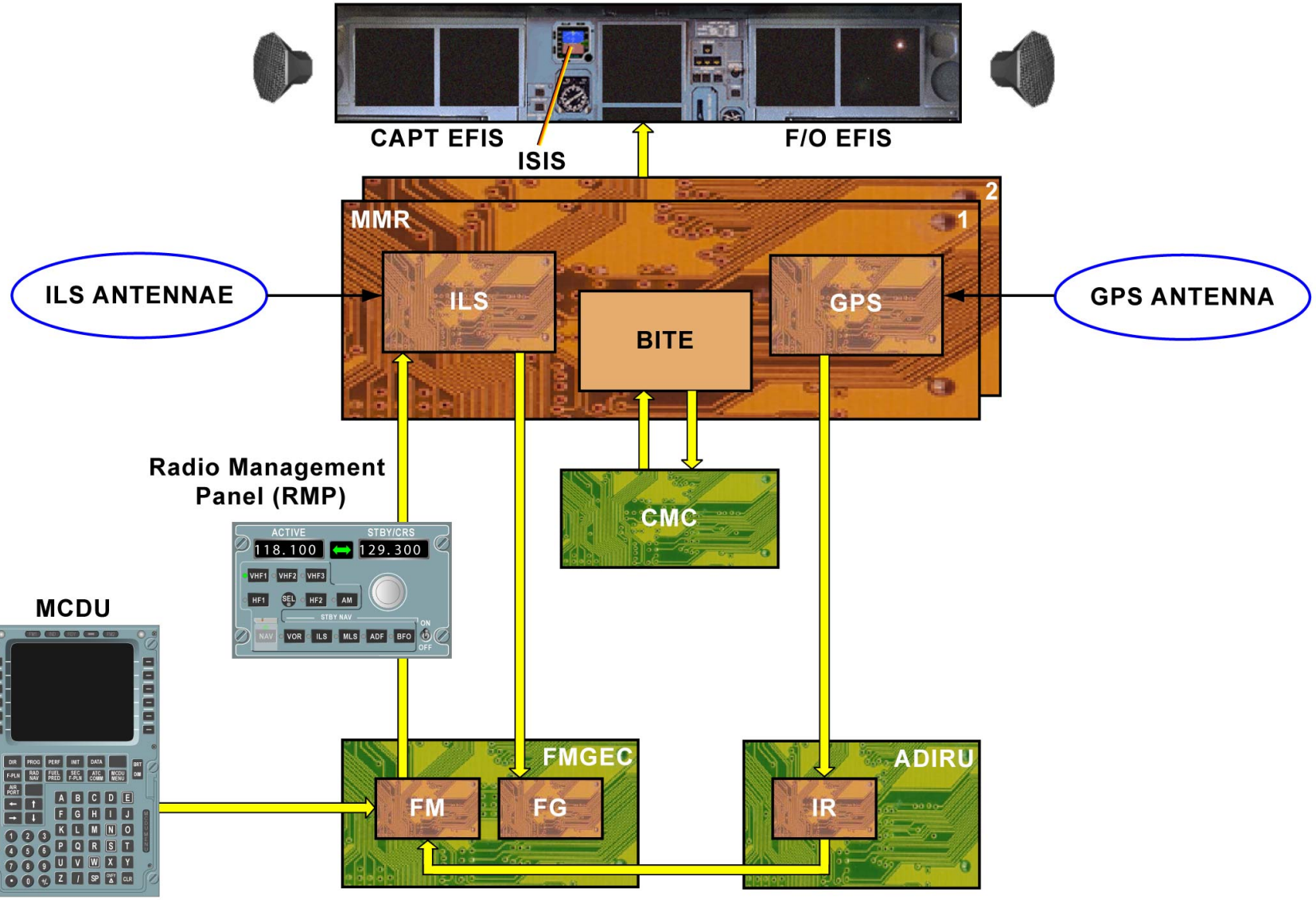

MAINTENANCE OPERATION

VOR/MKR-DME-ADF D/O (3)

GENERAL

The Very high frequency Omni directional and radio Range (VOR), Distance Measuring Equipment (DME), Automatic Direction Finder (ADF), and MARKER systems are radio navigation aids, which compute navigation data (bearing, slant distance) from ground stations.

G7508471 - G7OT0T0 - FM34D600000002

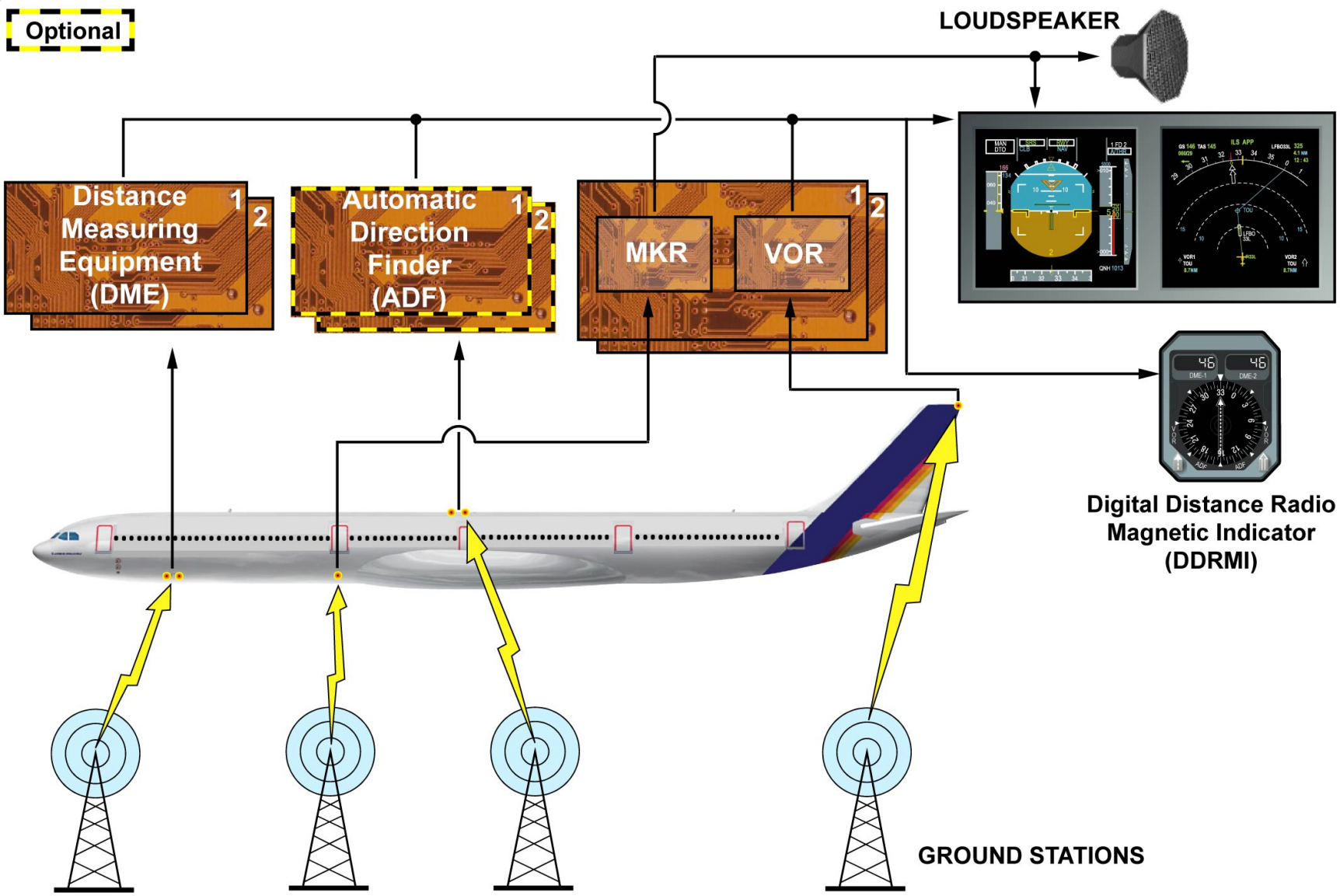
Optional
LOUDSPEAKER
Distance Measuring Equipment (DME)
1
2
Automatic Direction Finder (ADF)
1
2
MKR
VOR
1
2
Digital Distance Radio Magnetic Indicator (DDRMI)
GROUND STATIONS

GENERAL

VOR/MKR-DME-ADF D/O (3)

ADF PRINCIPLE

The ADF is a radio navigation aid, which receives and interprets the signals provided by a Non-Directional Beacon (NDB) at a ground station. A Morse signal is also provided to identify the selected ground station. The ADF provides a relative bearing to the instruments.

DME PRINCIPLE

The DME provides a digital readout of the aircraft slant range distance from a selected ground station. The system generates interrogation pulses and sends them to the DME ground station. The interrogator determines the distance in nautical miles (Nm) between the station and the aircraft. It also detects the Morse audio signal which identifies the ground station.

VOR PRINCIPLE

The VOR system is a navigation aid which receives, decodes and processes signals received from the omni directional ground station. The VOR system provides the bearing information from the difference between two signals transmitted by the ground station. It also provides:
- a Morse signal which identifies the station,
- the aircraft angular deviation and from/to position with respect to a selected course.

G7508471 - G7OT0T0 - FM34D600000002

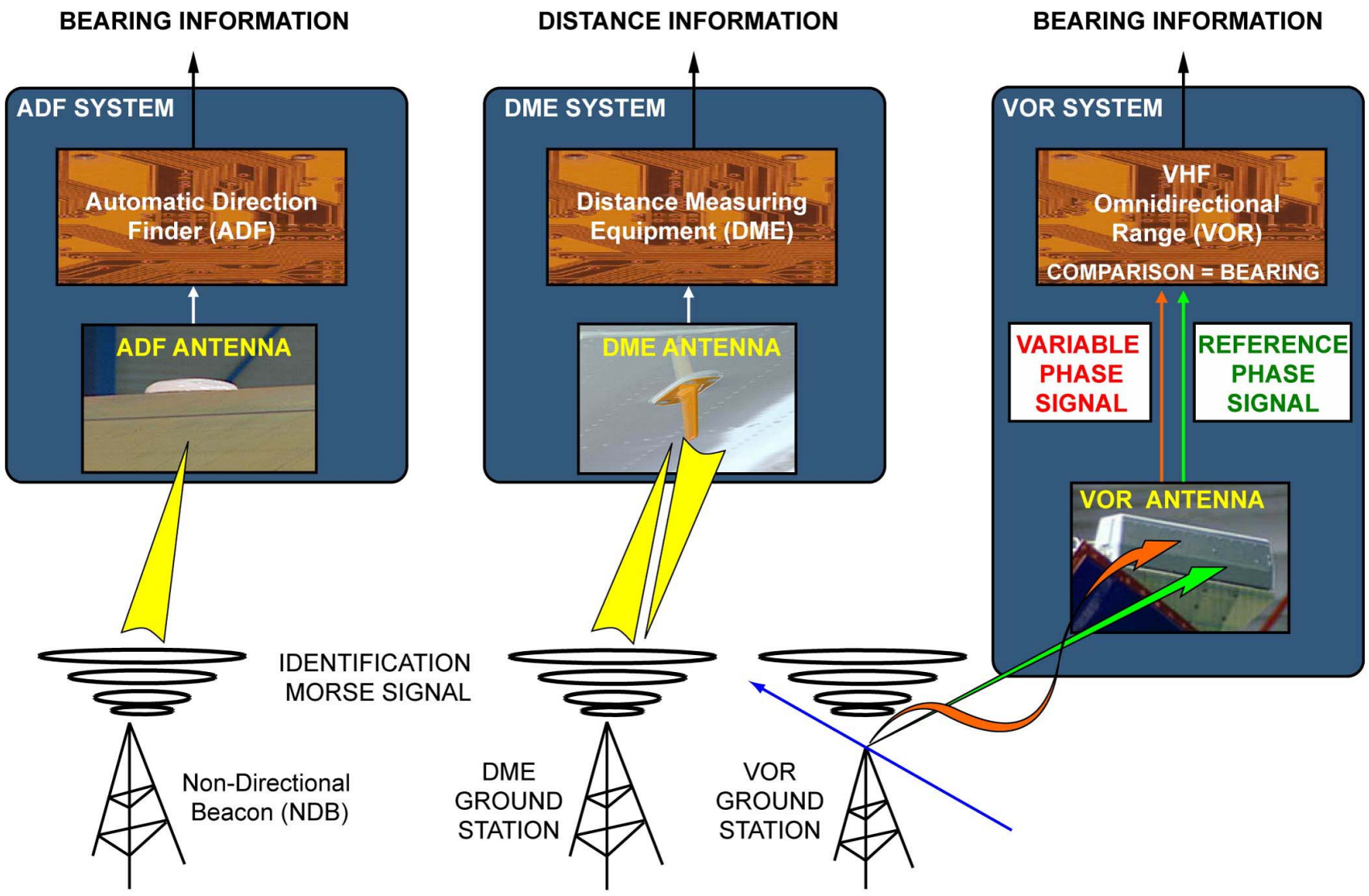

ADF PRINCIPLE ... VOR PRINCIPLE

G7508471 - G7OT0T0 - FM34D600000002

VOR/MKR-DME-ADF D/O (3)

MARKER PRINCIPLE

The MARKER system is a radio navigation aid, which provides indicators related to the distance between those marker signals and the runway threshold. These signals are transmitted vertically and if visualized appear as a cone radiating from the station. When the aircraft overflies one of the MARKER transmitters, the system provides aural and visual indications to the flight crew.

G7508471 - G7OT0T0 - FM34D600000002

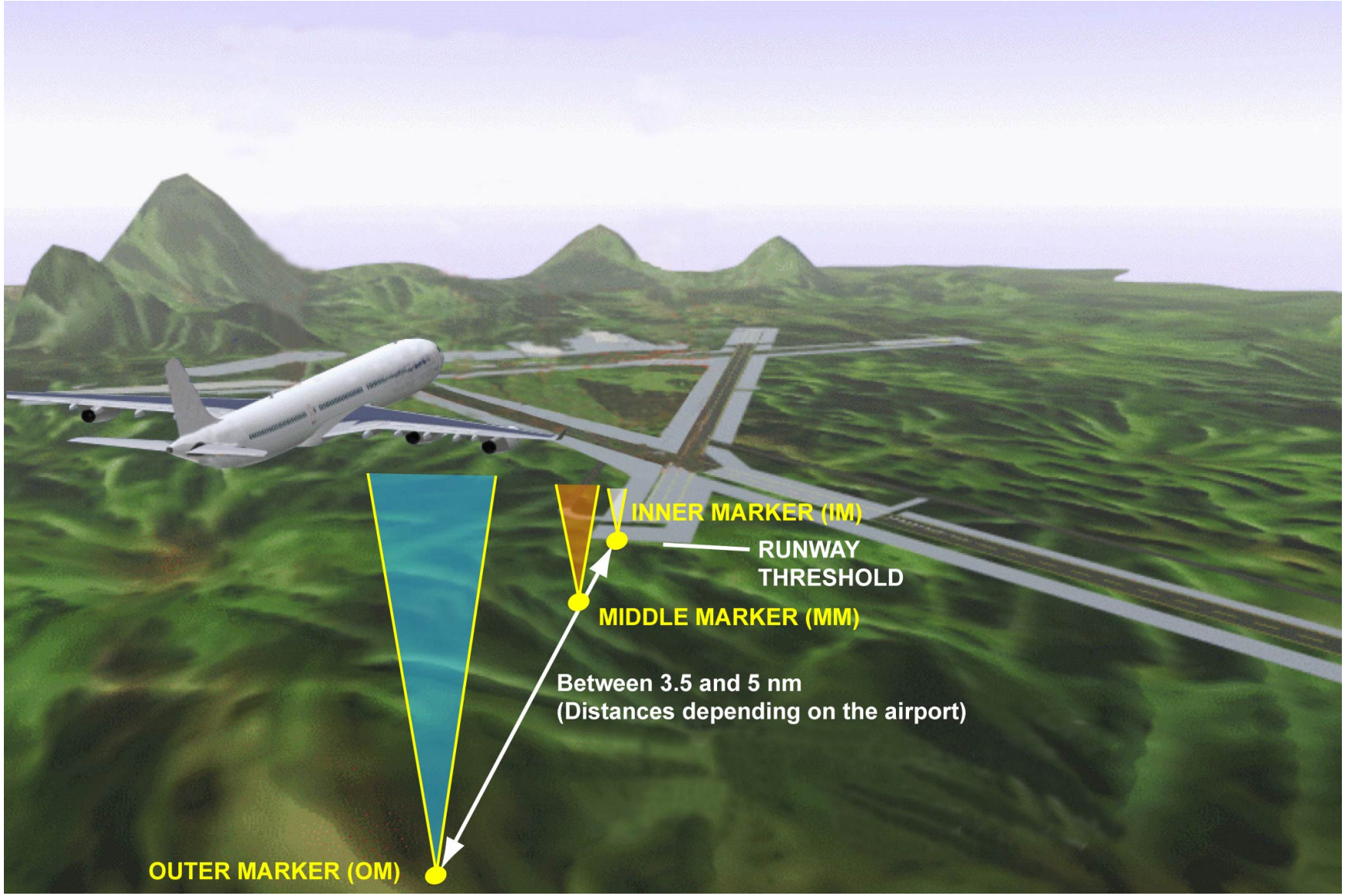

MARKER PRINCIPLE

G7508471 - G7OT0T0 - FM34D600000002

VOR/MKR-DME-ADF D/O (3)

DDRMI PRESENTATION

The Digital Distance Radio Magnetic Indicator (DDRMI) is mounted on the forward instrument panel. This instrument provides the crew with the following information:
- DME distance,
- VOR bearing,
- ADF bearing,
- heading information.

G7508471 - G7OT0T0 - FM34D600000002

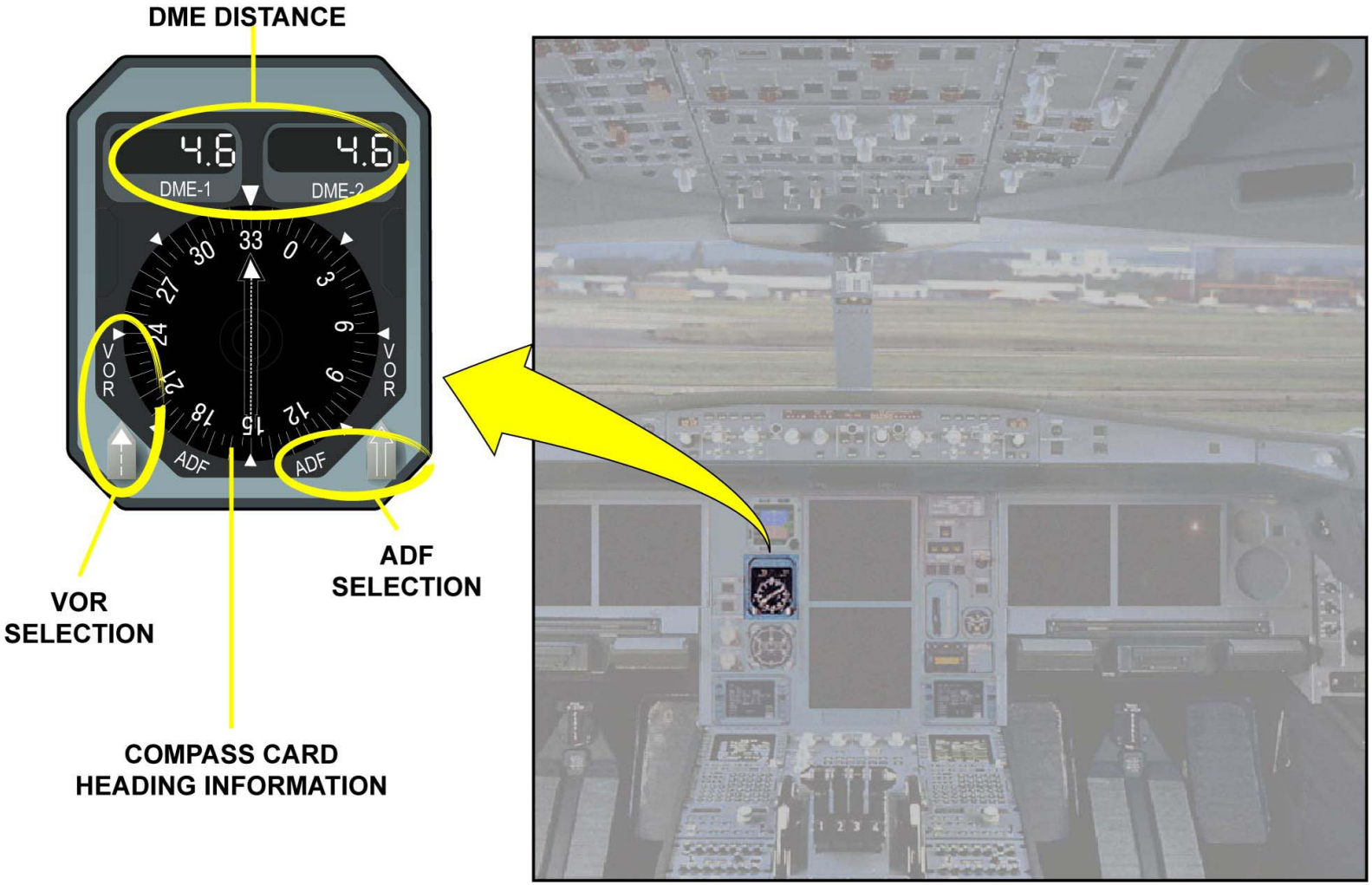

DDRMI PRESENTATION

VOR/MKR-DME-ADF D/O (3)

VOR/MKR-ADF-DME-DDRMI OPERATION

The tuning of the ADF, DME and VOR/MKR receivers is identical. In normal operation the Flight Management Guidance and Envelope Computers (FMGECs) automatically tune the receivers via their associated Radio Management Panels (RMPs). Each MCDU allows the receiver to be manually tuned through the FMGEC.
If both FMGECs fail, the RMPs enable the receivers to be tuned in backup mode. The data is sent to the EFIS and to the DDRMI. The audio signal (Morse signal) processed by the receivers is sent to the Audio Management System and can be heard by the crew.
It is possible to test the systems through the Central Maintenance Computer (CMC) by using the MCDU CMC function on the ground.

G7508471 - G7OT0T0 - FM34D600000002

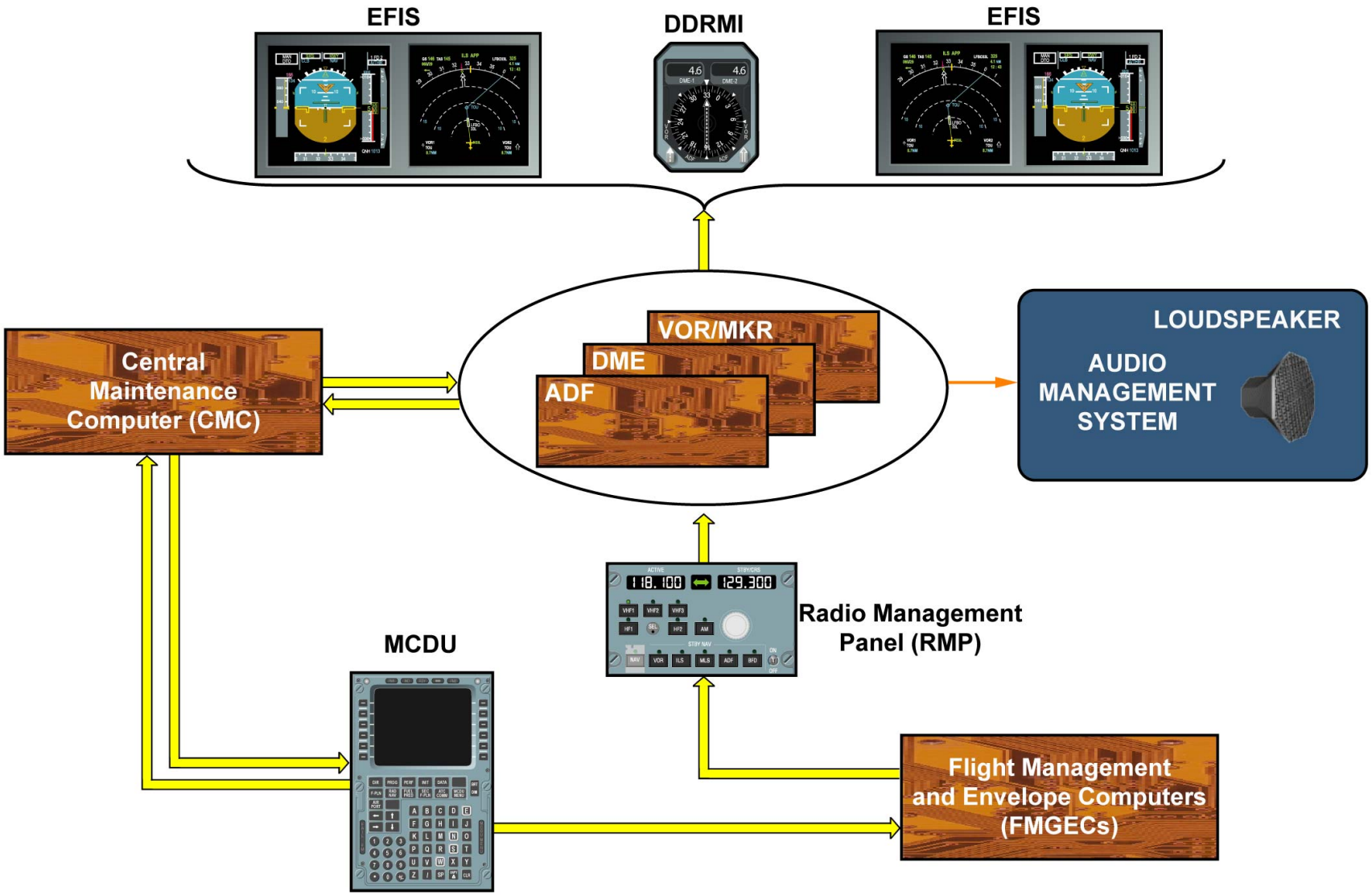

VOR/MKR-ADF-DME-DDRMI OPERATION

G7508471 - G7OT0T0 - FM34D600000002

VOR/MKR-DME-ADF D/O (3)

AUTO TUNING

In normal operation each Flight Management Guidance and Envelope Computer (FMGEC) automatically tunes its ownside VOR receiver, DME interrogator and ADF receiver through its ownside Radio Management Panel (RMP). The VOR transceiver start-up system is ensured by a discrete signal.

MANUAL TUNING

Each MCDU allows the ownside VOR receiver, DME interrogator and ADF receiver to be manually tuned through the ownside FMGEC and the opposite system units to be tuned through the opposite FMGEC.

FLIGHT MANAGEMENT SWITCHING

If a FMGEC failure occurs, a discrete, generated by the Flight Management (FM) switching, changes the tuning port of the associated VOR receiver, DME interrogator and ADF receiver so that they can be directly tuned by the opposite FMGEC.

BACK-UP TUNING

If both FMGECs fail, each RMP allows its ownside VOR receiver, DME interrogator and ADF receiver to be directly tuned after selection of the NAV mode. If at least one FMGEC is valid, when the STandBY NAVigation is activated, the RMP sends a discrete to the FMGEC to inhibit the FMGEC auto and manual tuning as well as the MCDU radio NAV page.

ANTENNA

The dual VOR antenna receives the signals coming from the ground stations. The VOR antenna has two independent connectors used to feed the two VOR systems. It operates in the 108 MHz to 118 MHz range.

The MKR system consists of two identical VOR/MKR receivers but only MKR one is operative as connected to the MKR antenna. The MKR system operates at a fixed frequency. The MKR antenna receives MKR signals when the A/C overflies the MKR beacons. The MKR antenna operates at 75 MHz.

The DME antenna transmits the DME interrogation and receives the reply from the selected ground station. The DME and ATC use identical and interchangeable blade antennae, designed for operation between 962 MHz and 1213 MHz. The DME, the ATC and Traffic Alert and Collision Avoidance System (TCAS) operate with interrogation/reply pulses in the same frequency range. The suppressor signal is transmitted by the operating system during each pulse to inhibit the other systems and to prevent simultaneous transmission.

The ADF antenna provides three signals and consists of one sense antenna and two loop antennae called longitudinal antenna and lateral antenna. The ADF antenna operates between 150 kHz and 1799 KHz and comprises one pre-amplifier for each antenna that is energized by the ADF receiver and a test loop which enables a self-test of the antenna although it is not used.

INDICATING

The DME data is sent to the PFD and the ND through the Display Management Computers (DMCs) and directly to the Digital Distance and Radio Magnetic Indicator (DDRMI). The ADF and VOR data is sent to the ND through the DMC and directly to the DDRMI. The MKR data is sent to the PFD through the DMC. The VOR, MKR, DME and ADF audio signals are processed by their corresponding receivers and sent to the Audio Management Unit (AMU) and can be heard by the crew.

LGCIU

Each Landing Gear Control and Interface Unit (LGCIU) sends discrete signals to the associated DME interrogator, ADF receiver and VOR

G7508471 - G7OT0T0 - FM34D600000002

receiver. This ground/flight information is used by the receiver BITE module to count the flight legs.

FMGEC

The VOR and DME data are sent to the FMGECs respectively for aircraft position and radio distance computation.

CMC

The MCDUs allow the systems to be tested via the Central Maintenance Computers (CMCs). The tests are only available on ground.

G7508471 - G7OT0T0 - FM34D600000002

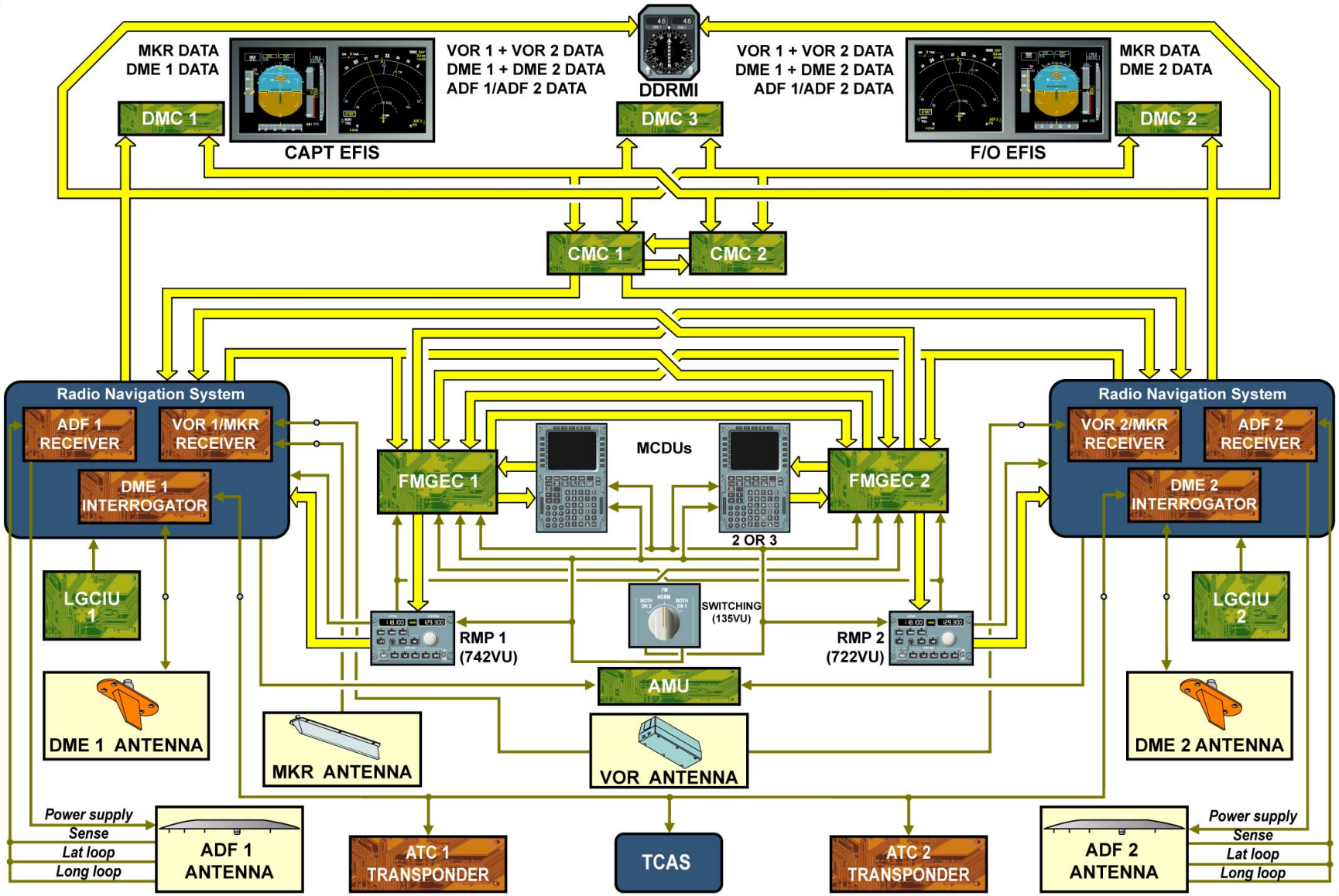

AUTO TUNING ... CMC

G7508471 - G7OT0T0 - FM34D600000002

This Page Intentionally Left Blank

G7508471 - G7OT0T0 - FM34D600000002

TAWS/EGPWS/T2CAS D/O (3)

GENERAL

This module describes in detail the functions of the Terrain Awareness and Warning System (TAWS). The TAWS is an improved system over the former Ground Proximity Warning System (GPWS). The TAWS is also known as the Enhanced Ground Proximity Warning System (EGPWS) or Terrain and Traffic Collision Avoidance System (T2CAS).

DATA INPUTS

DIGITAL INPUTS

The TAWS receives digital data inputs as follow:
- serial digital data inputs from the Radio Altitude (RA) 1, the Multi-Mode Receiver (MMR) 1-ILS (Glide/Slope deviation, localizer deviation and runway heading) through ARINC 429 bus (Low Speed),
- Air Data/Inertial Reference Unit (ADIRU) 1- Inertial Reference (IR) with Inertial Reference System (IRS) mode, ground speed, true track, true heading, roll angle, flight path angle, latitude and longitude through ARINC 429 bus (High Speed),
- ADIRU 1- Air Data Reference (ADR) with computed airspeed, barometric altitude, altitude rate and SAT through ARINC 429 bus (LS),

Flight Control Unit (FCU) 1 and 2 provide range and baro setting through LS ARINC 429 bus and the Flight Management Guidance and Envelope Computer (FMGEC) 1 provides navigation data through HS ARINC 429 and some others data through a LS bus.
- the Central Maintenance Computer (CMC) 1 provides maintenance data through a LS speed ARINC 429 bus. The CMC receive, during the flight, the status of the EGPWS from the BITE module. The MCDUs allow the systems to be tested via the CMCs. The tests are only available on ground.

DISCRETE INPUTS

The TAWS also receives discrete data inputs. The flap position from the Slat and Flap Control Computer (SFCC) 1 consolidated with MCDU selection for landing. To avoid nuisance warnings during approach, the EGPWC needs to know at which flap position the crew intends to land. If the FLAP 3 position is selected from one MCDU, FMGEC 1 or 2 activates a relay, which selects the ground signal from SFCC 1.
The FWCs send a discrete to the EGPWC to inhibit all warnings when a stall or windshear warning is triggered.
The Landing Gear Control and Interface Unit (LGCIU) sends a discrete signal to the EGPWC. The ground/flight information, sent by the LGCIU, is used by the EGPWC BITE module to count the flight legs.
The TAWS also receives other discrete inputs from:
- the ECAM Control Panel (ECP) for audio cancel,
- the GPWS control panel for override or inhibition of modes 1 to 5,
- the PULL UP/GPWS P/BSW to enable self test on ground or cancel mode 5 in flight,
- Weather Radar (WXR) control unit for ON/OFF indication.

VISUAL WARNINGS

System failures are indicated by two fault annunciators on the EGPWS control panel. Hazardous configuration warning annunciators are located on the main instrument panel. Four discretes control the warning legends:
- one for red PULL UP legends, for ground proximity warning modes 1 to 4 or enhanced features warnings,
- one for amber GPWS legends, for Glide/Slop (G/S) advisory alert for mode 5,
- one monitor output for the amber FAULT legend of the GPWS/SYS P/B to indicate a mode 1 to 5 failure and generate the "GPWS FAULT" ECAM message via the System Data Acquisition Concentrator (SDAC),

G7508471 - G7OT0T0 - FM34D800000002

- one TERRain monitor output for the amber FAULT legend of the GPWS/TERR P/B to indicate an enhanced function failure and generate the "GPWS TERR DET FAULT" ECAM warning message.

AURAL WARNINGS

The cockpit loudspeakers use the audio output via the Audio Management Unit (AMU) for transmission of aural warning messages. The EGPWC receives a discrete signal from the ECAM Control Panel (ECP), which allows the crew to cancel the audio transmission.

EGPWS CONTROL

Different P/Bs allow the crew to control the actions of the EGPWS. When pressed in, on the GPWS panel, the SYS P/B inhibits all the GPWS warnings, the G/S MODE P/B inhibits the G/S mode and the FLAP MODE P/B inhibits flap abnormal condition input and generates the "GPWS FLAP MODE OFF" ECAM message. When pressed in, the TERR P/B in white legend inhibits the terrain awareness.
When pressed in, the CAPT or F/O PULL UP/GPWS P/B cancels the G/S mode or initiates the self-test sequence (on ground). When the TERR ON ND P/B is pressed in, on the center instrument panel, the green ON legend comes on to indicate that terrain data is displayed on the ND (following manual or automatic pop-up selection).
The enhanced functions are GPWS added functions, which automatically display, on the NDs, the terrain data, in place of the radar image, when a terrain caution or warning is detected or at any time by using the TERR ON ND P/B. If the optional predictive windshear is activated, the predictive windshear alerts have priority over EGPWS modes.
Different output signals are sent from the EGPWC to other systems. One bus output is used by the Aircraft Condition Monitoring System (ACMS) through the Flight Data Interface and Management Unit (FDIMU). One discrete output is used for the Digital Flight Data Recorder (DFDR) via Flight Warning Computers (FWCs) 1 and 2. Two discrete outputs are used to inhibit Traffic alert and Collision Avoidance System (TCAS) and automatic call-out when the GPWS or G/S warnings are in progress.

The Runway Awareness and Advisory System (RAAS) is an optional software enhancement hosted in the EGPWS Unit.The RAAS uses GPS position data and the EGPWS Database to give aural advisories that supplement flight crew awareness on position during ground operations and on landing approach..
The baro selector knob features 3 possible actions: pull action for the display of STD, push action first, one time for the display of the QNH, and push action a second time for the QFE display .
The QFE function can be deactivated by an option.

G7508471 - G7OT0T0 - FM34D800000002

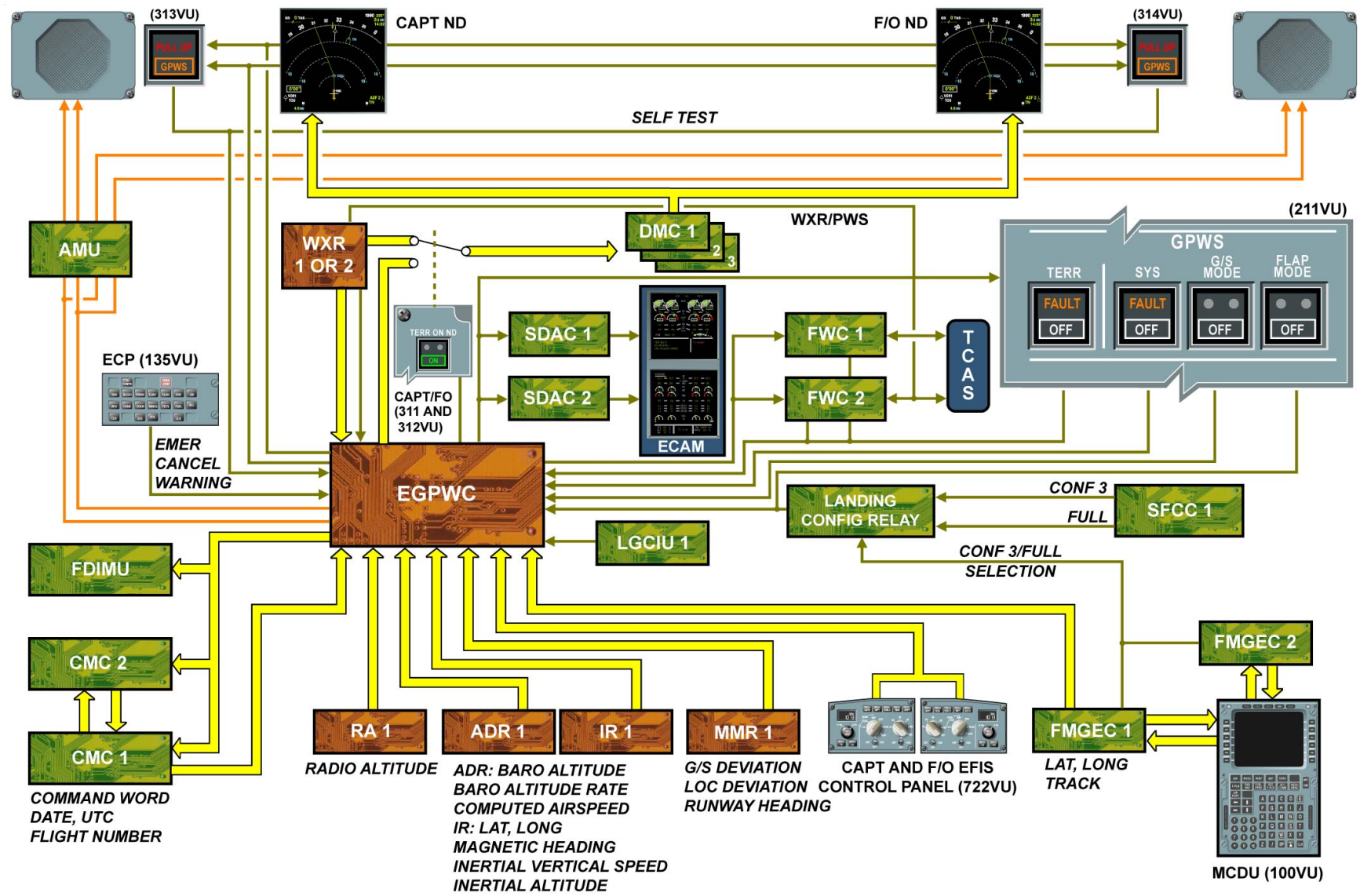

GENERAL ... EGPWS CONTROL

G7508471 - G7OT0T0 - FM34D800000002

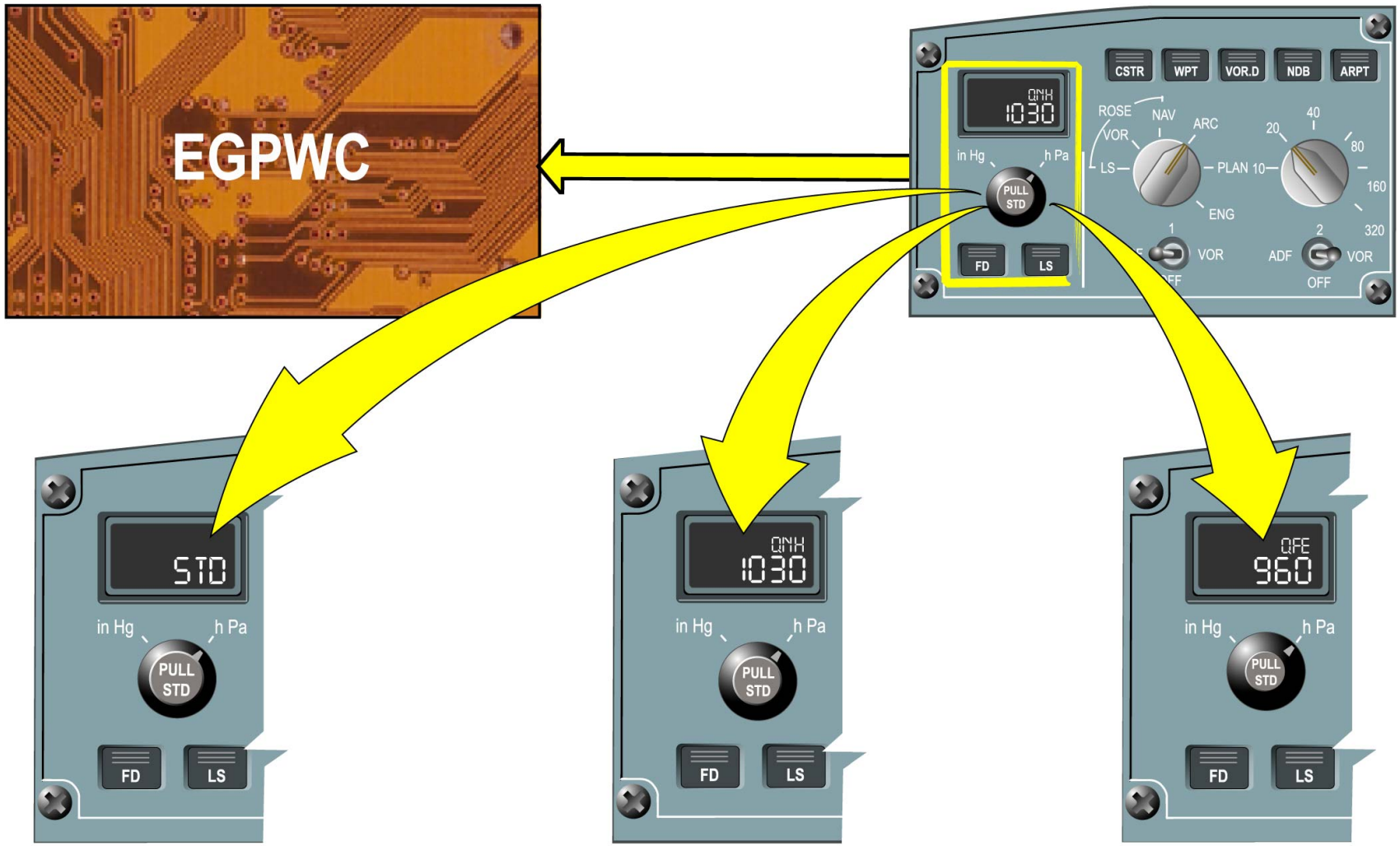

Pull action for the display of STD

Push action first once for the display of QNH

Push action one second time for the display of QFE

GENERAL ... EGPWS CONTROL

TAWS/EGPWS/T2CAS D/O (3)

WARNING MODES

The digital and discrete data inputs are used in different combinations to monitor A/C vertical path. If the warning envelope is penetrated, visual and aural warnings are generated. The aural messages are broadcasted, and visual warnings are indicated by the EGPWS lights. Modes 1 to 5 are the basic GPWS modes.

G7508471 - G7OT0T0 - FM34D800000002

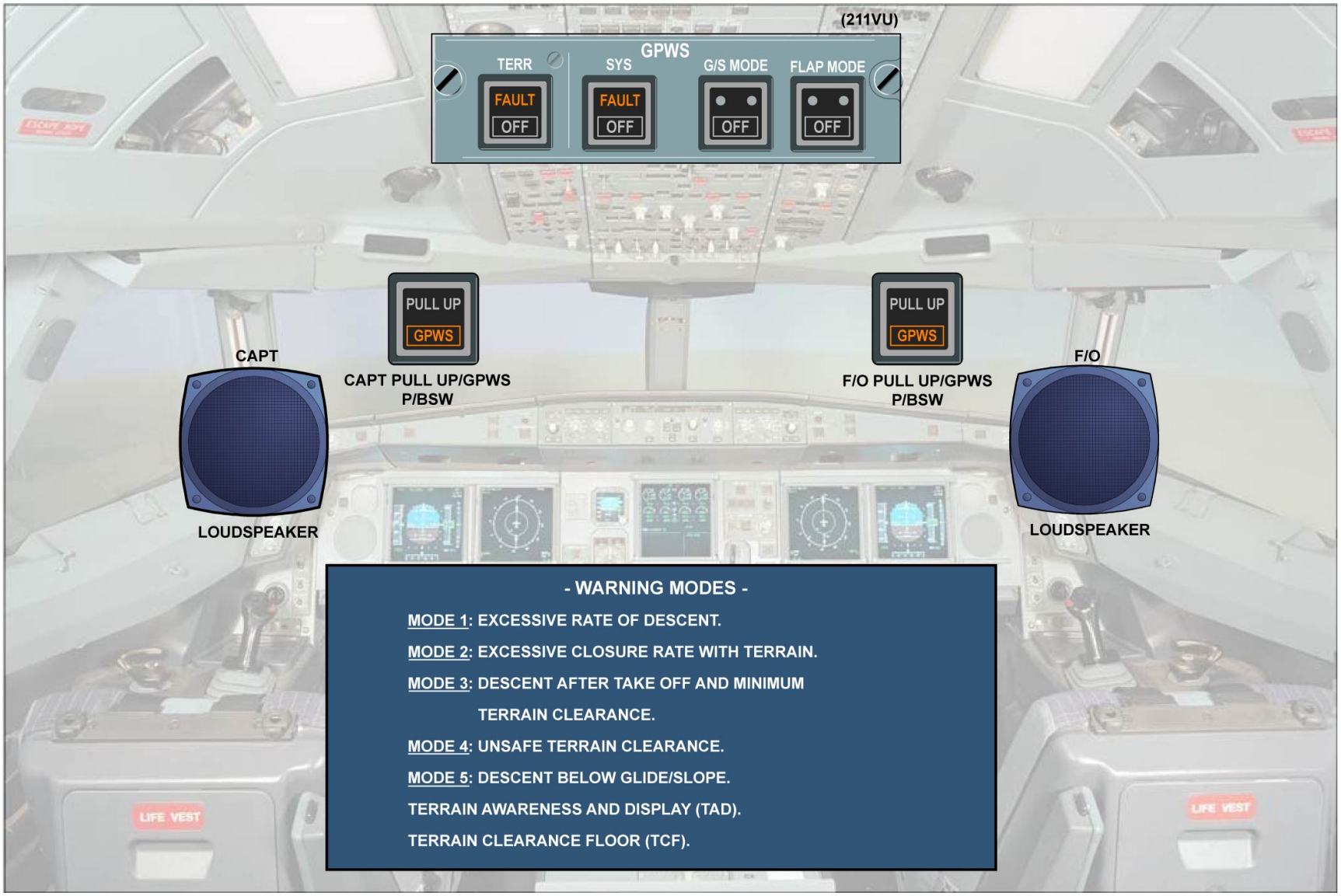

WARNING MODES

TAWS/EGPWS/T2CAS D/O (3)

WARNING MODES (continued)

MODE 1

Mode 1 triggers an alert warning for high descent rate into terrain and for rapidly increasing sink rates near the runway when landing. These alerts will continue until the boundary penetration is corrected.

G7508471 - G7OT0T0 - FM34D800000002

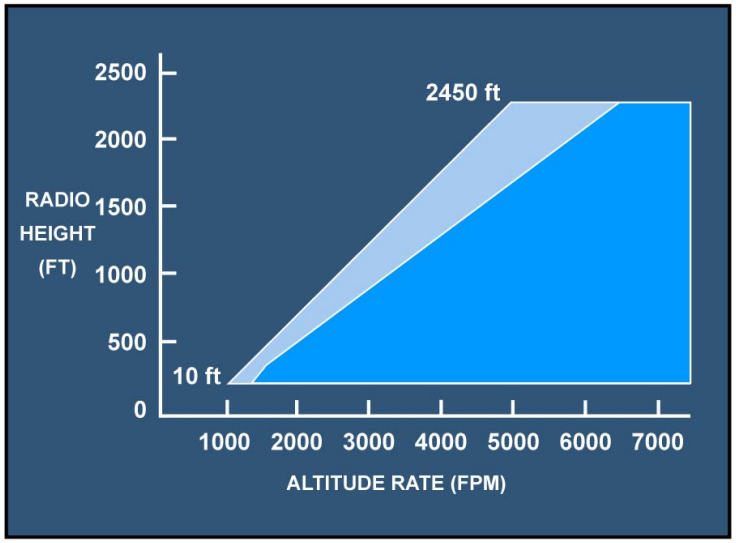

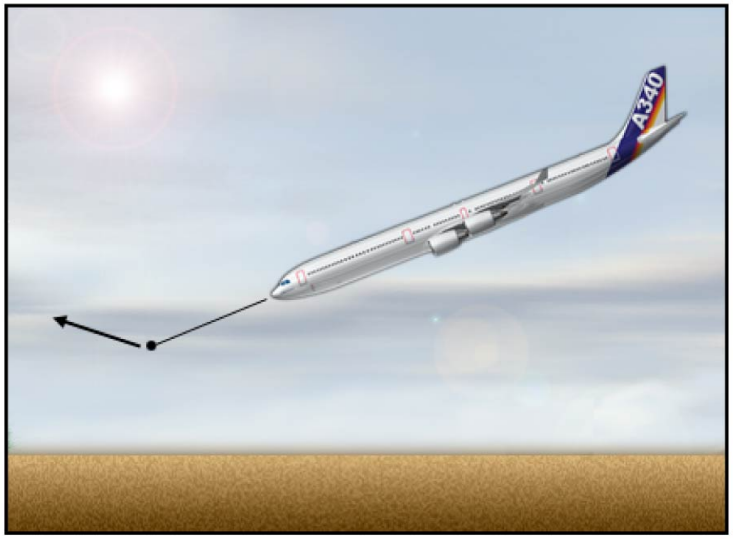

WARNING MODE 1

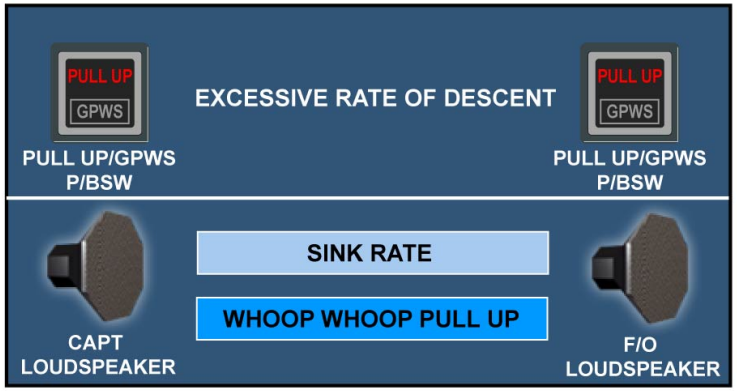

WARNING INHIBITIONS

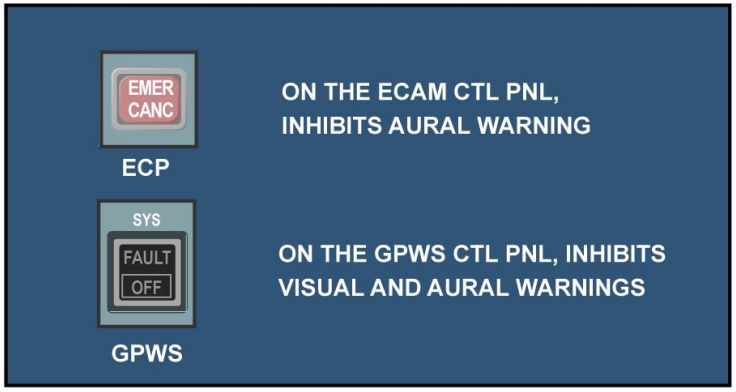

WARNING MODES - MODE 1

G7508471 - G7OT0T0 - FM34D800000002

TAWS/EGPWS/T2CAS D/O (3)

WARNING MODES (continued)

MODE 2

Mode 2 triggers a warning based on the radio height and on how rapidly the radio height decreases. Mode 2B requires the FLAPS to be in landing configuration or the A/C to be in G/S beam within +/- 2 dots of deviation during an ILS approach. After leaving the warning area, the repeated "TERRAIN" message will persist until an increase of baro altitude of 300 ft is obtained.

G7508471 - G7OT0T0 - FM34D800000002

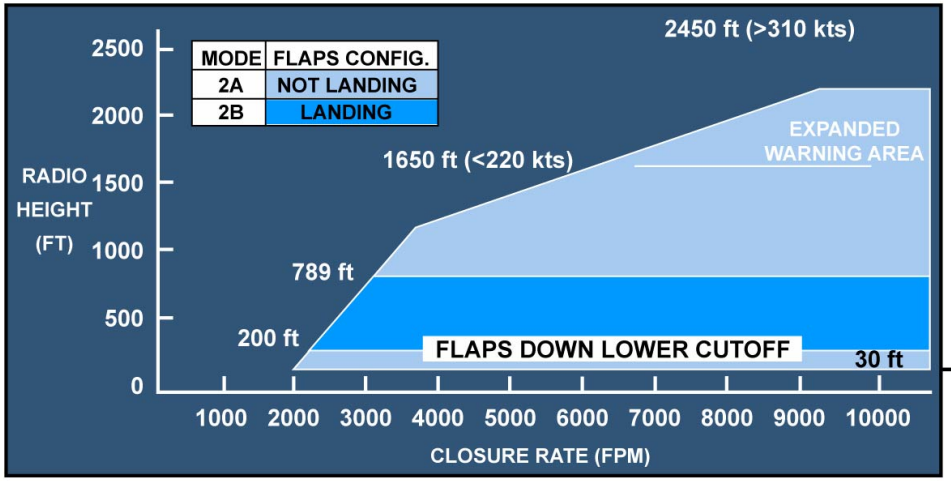

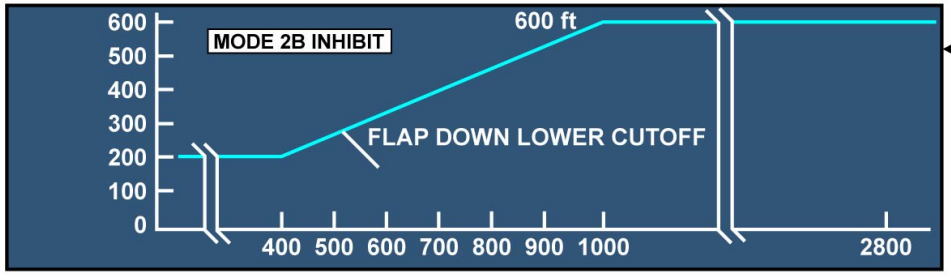

WARNING INHIBITIONS

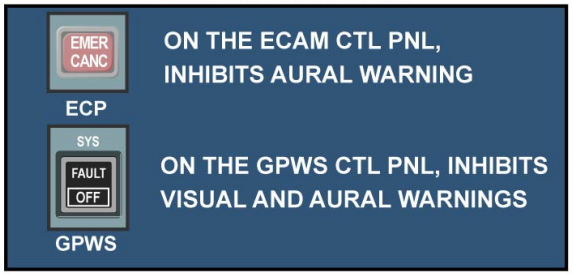

WARNING MODE 2

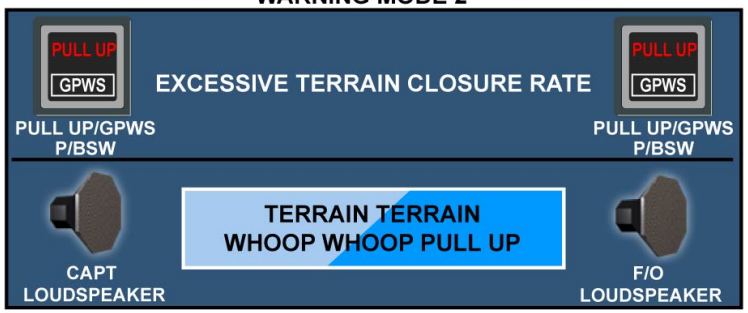

WARNING MODES - MODE 2

G7508471 - G7OT0T0 - FM34D800000002

TAWS/EGPWS/T2CAS D/O (3)

WARNING MODES (continued)

MODE 3

Mode 3 triggers a warning for excessive altitude loss after take-off.

G7508471 - G7OT0T0 - FM34D800000002

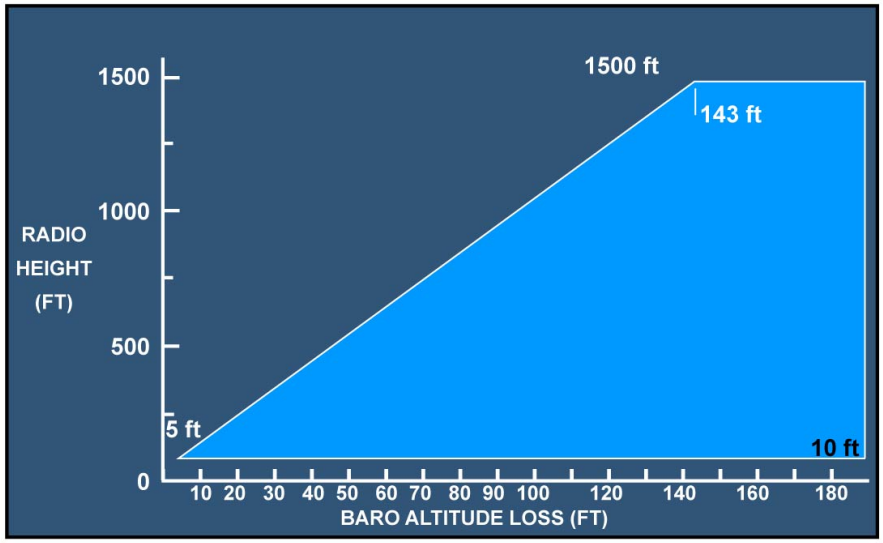

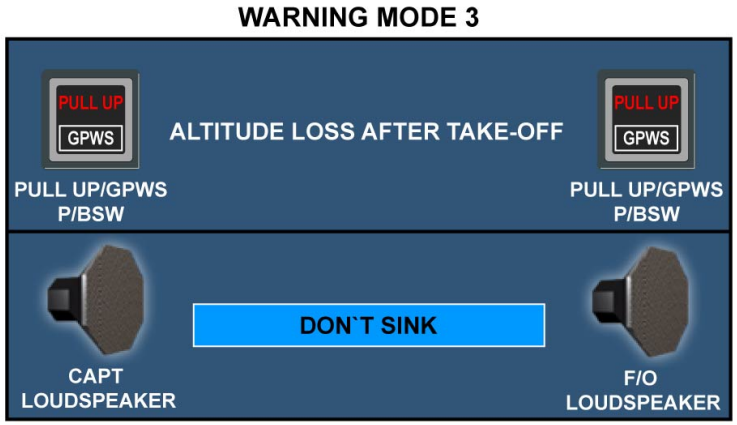

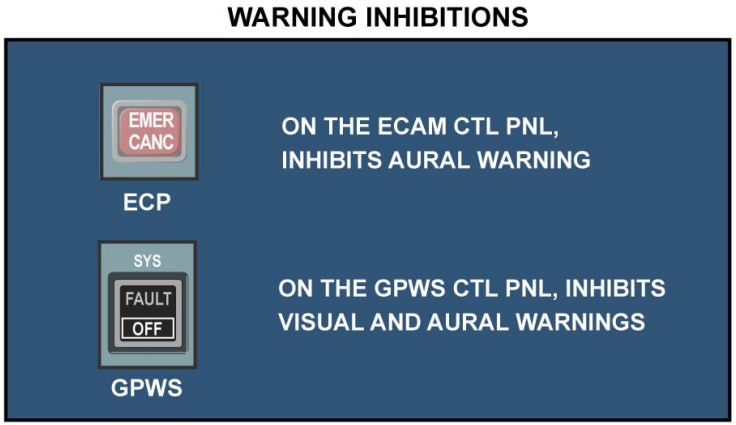

WARNING MODES - MODE 3

G7508471 - G7OT0T0 - FM34D800000002

TAWS/EGPWS/T2CAS D/O (3)

WARNING MODES (continued)

MODE 4

Mode 4 generates three types of voice warning based on the radio height, computed airspeed, and A/C configuration. The "TOO LOW GEAR" message warning has priority over the other two messages.

G7508471 - G7OT0T0 - FM34D800000002

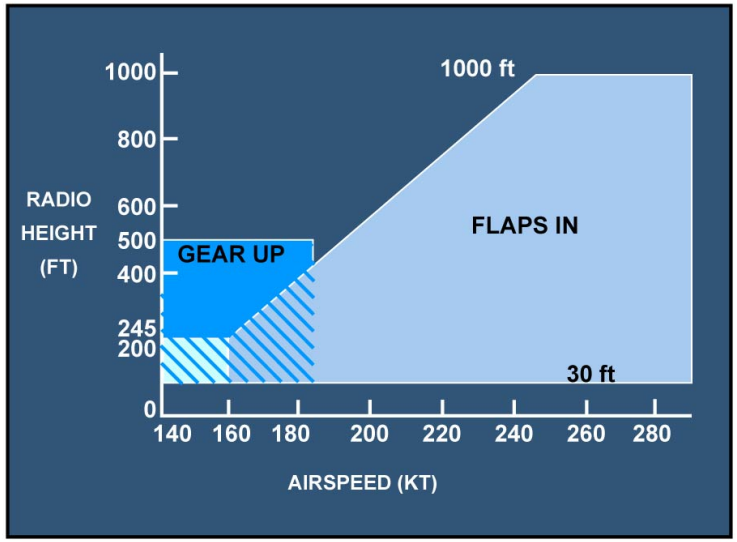

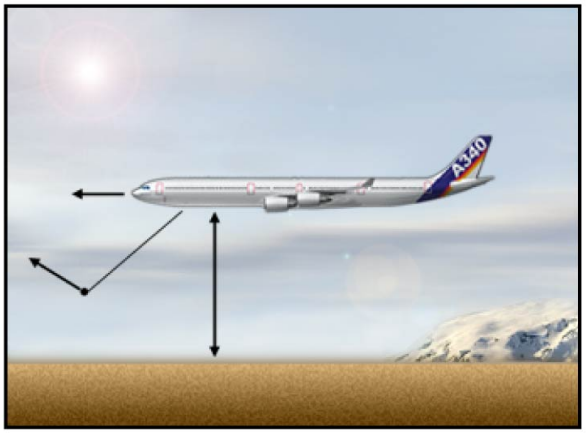

WARNING MODE 4

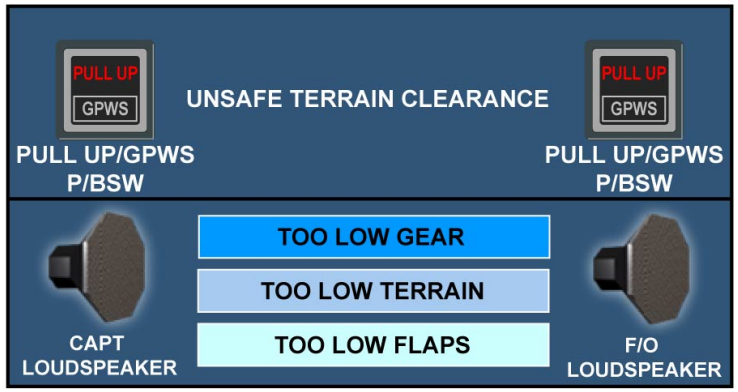

WARNING INHIBITIONS

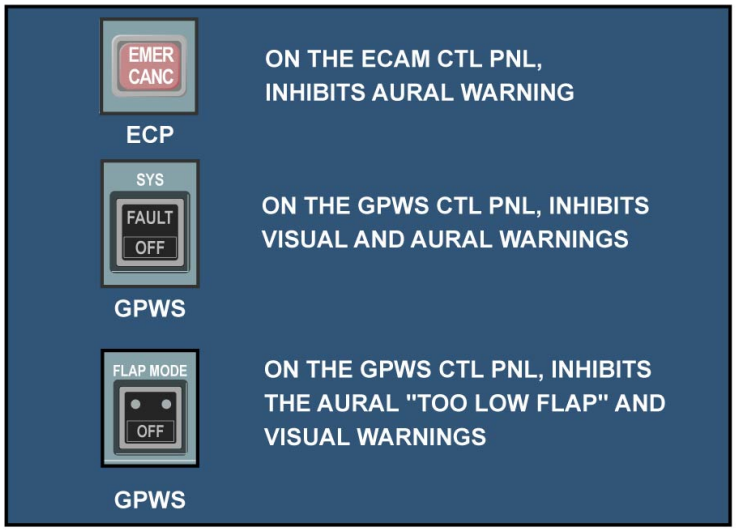

WARNING MODES - MODE 4

G7508471 - G7OT0T0 - FM34D800000002

TAWS/EGPWS/T2CAS D/O (3)

WARNING MODES (continued)

MODE 5

Mode 5 triggers two levels of warning when the A/C flight path descends below the G/S beam during ILS approaches.

G7508471 - G7OT0T0 - FM34D800000002

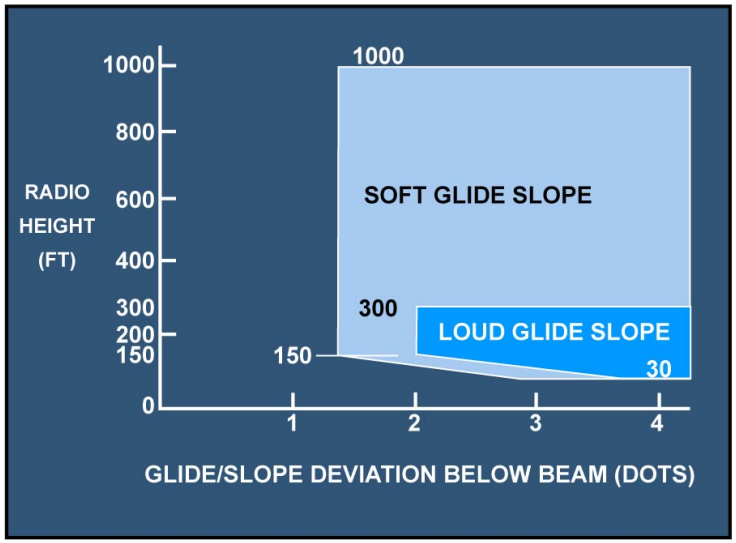

WARNING MODE 5

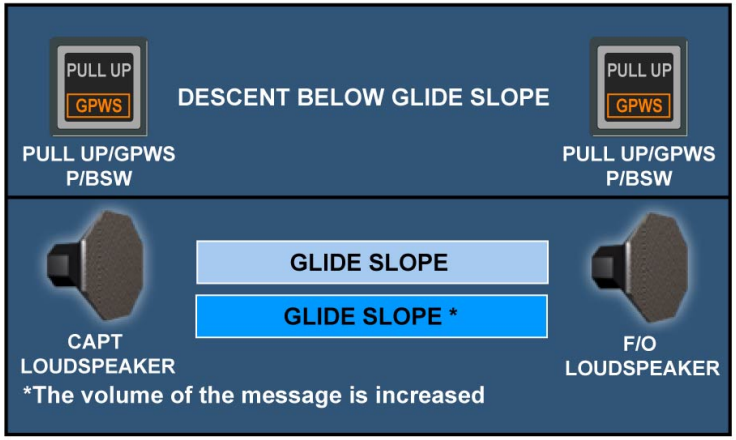

WARNING INHIBITIONS

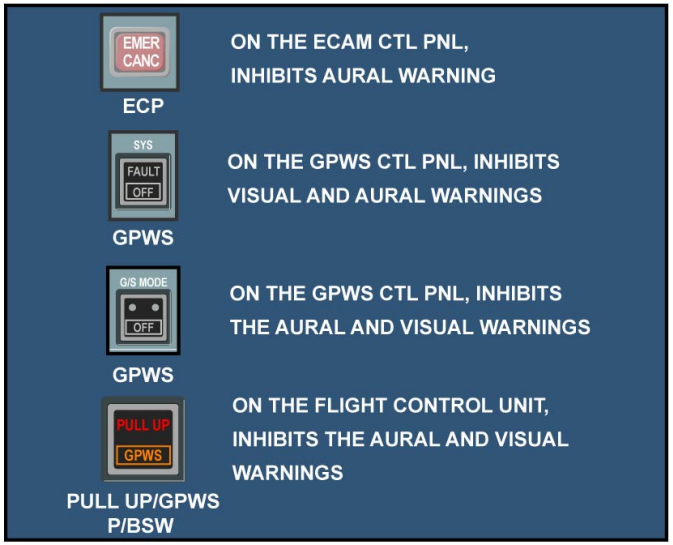

WARNING MODES - MODE 5

G7508471 - G7OT0T0 - FM34D800000002

TAWS/EGPWS/T2CAS D/O (3)

WARNING MODES (continued)

TERRAIN AWARENESS AND DISPLAY (TAD)

In addition to the basic GPWS function, the EGPWS features predictive functions based on a worldwide terrain database. When a terrain threat FWD of the A/C path is detected, with respect to the A/C position and the local terrain database, caution and warning alerts are triggered. These alerts are completed by a terrain image on the NDs, a red area for warnings and a yellow area for cautions.
When the envelope boundaries are met, the following alerts are generated:
- terrain caution alert: "TERRAIN AHEAD, TERRAIN AHEAD" is broadcasted for Joint Aviation Authorities (JAA) regulations or "CAUTION TERRAIN, CAUTION TERRAIN" for Federal Aviation Administration (FAA) regulations,
- terrain warning alert: "TERRAIN AHEAD, PULL UP" is broadcasted for JAA regulations or "TERRAIN, TERRAIN, PULL UP" for FAA regulations.
- obstacle caution alert: "OBSTACLE AHEAD, OBSTACLE AHEAD" is broadcasted for JAA regulations or "CAUTION OBSTACLE, CAUTION OBSTACLE" for FAA regulations,
- obstacle warning alert: "OBSTACLE AHEAD, PULL UP" is broadcasted for JAA regulations or "OBSTACLE, OBSTACLE, PULL UP" for FAA regulations.

NOTE: The EGPWS also incorporates an obstacle database in which are recorded the man made obstacles. They are treated as terrain.

G7508471 - G7OT0T0 - FM34D800000002

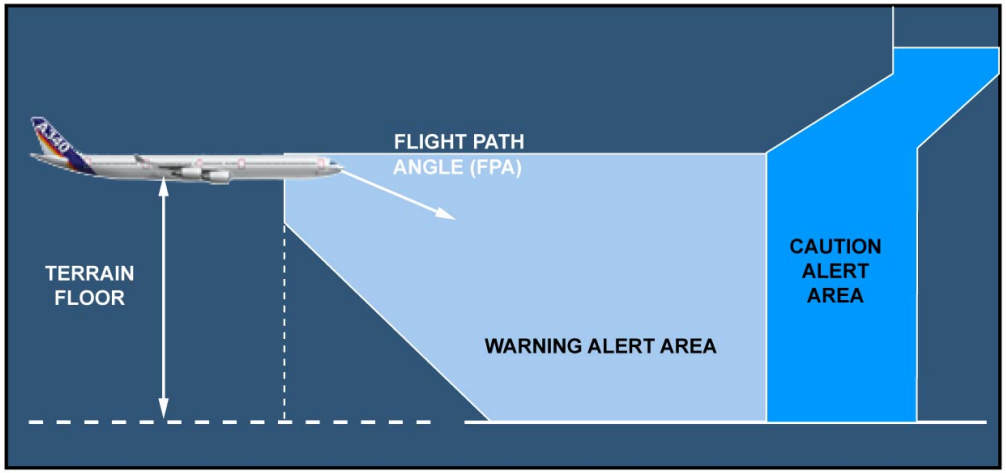

ENVELOPE BOUNDARIES

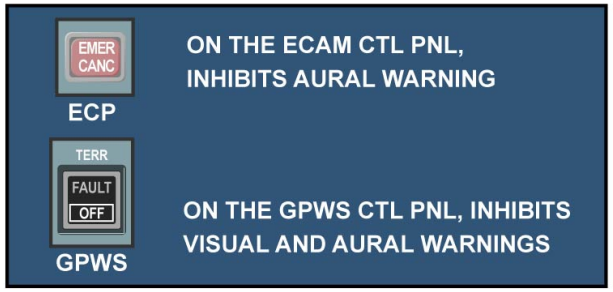

WARNING INHIBITIONS

TAD

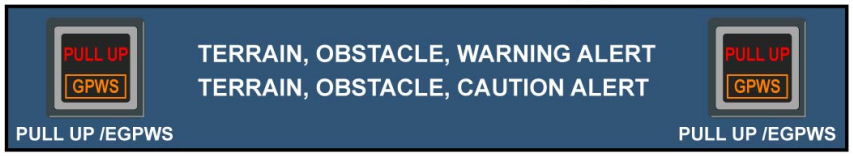

TAD JAA

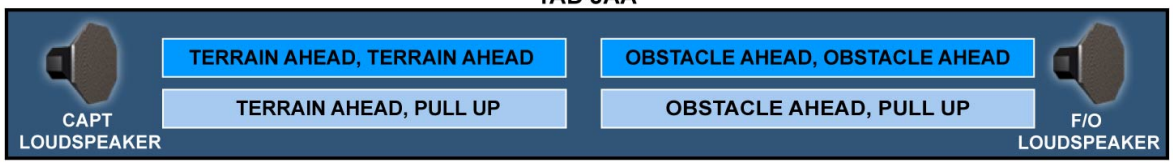

TAD FAA

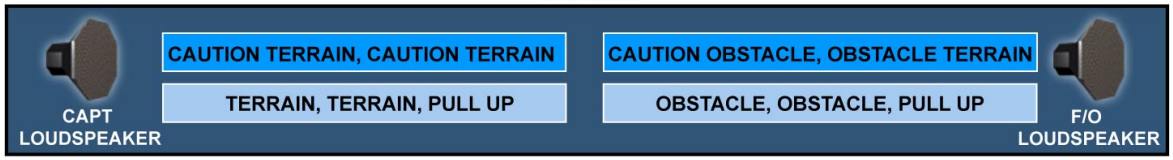

WARNING MODES - TERRAIN AWARENESS AND DISPLAY (TAD)

G7508471 - G7OT0T0 - FM34D800000002

TAWS/EGPWS/T2CAS D/O (3)

WARNING MODES (continued)

TERRAIN AWARENESS AND DISPLAY (TAD): BACKGROUND DISPLAY

The Terrain Awareness alerting and Display (TAD) function displays the background terrain and terrain alerts, FWD of the A/C, in the ROSE and ARC modes on NDs. The background terrain display is depicted as variable density dot patterns in green, yellow or red depending on how close the terrain is relative to the A/C altitude. Terrain is not shown if more than 2000 ft below the A/C altitude and if the terrain elevation is within 400 ft of the runway elevation nearest the A/C.

Depending on the conditions of terrain alert, the background image is enhanced to highlight the terrain threats by coloring them in solid yellow for the terrain caution alert and in solid red for the terrain warning alert. For the terrain or obstacle caution alert, that's 60 s from impact, the "TERRAIN AHEAD" or "OBSTACLE AHEAD" audio alert is repeated after 7 s if the A/C is still in the caution envelope. The amber GPWS caution comes on and an amber TERRain AHEAD or OBSTacle AHEAD message appears on the ND.

For the terrain or obstacle warning alert, that's 30 s from impact, the "TERRAIN AHEAD PULL UP" or "OBSTACLE AHEAD PULL UP" audio alert is repeated continuously while the A/C is in the warning envelope. The PULL UP red warning comes on and a red TERRain AHEAD or OBST AHEAD message appears on the ND.

The peaks mode enables the display of the absolute terrain elevation relative to the range, with the display of two numerical values, which indicate the highest and lowest elevation in the selected range.

G7508471 - G7OT0T0 - FM34D800000002

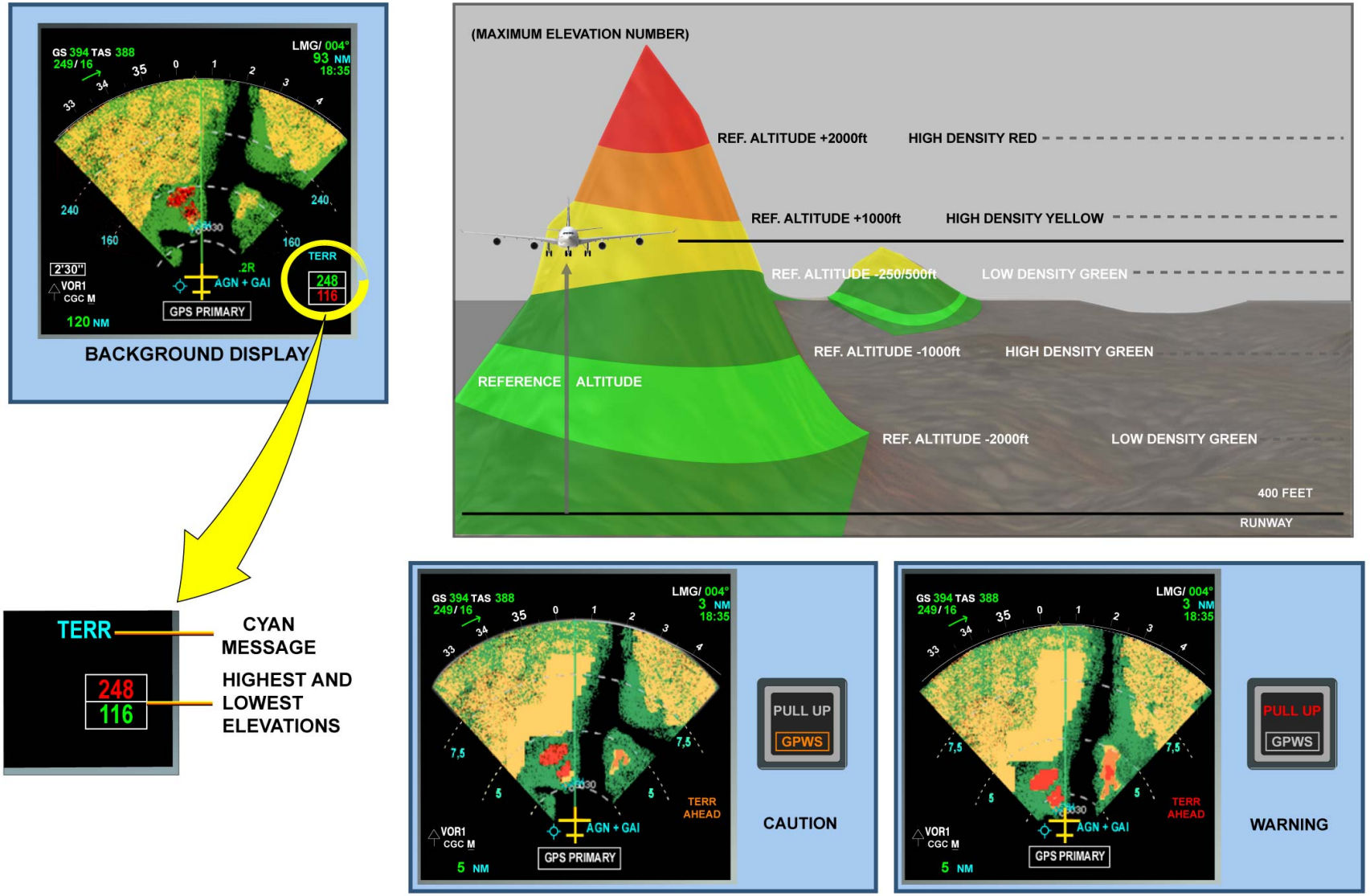

WARNING MODES - TERRAIN AWARENESS AND DISPLAY (TAD): BACKGROUND DISPLAY

G7508471 - G7OT0T0 - FM34D800000002

TAWS/EGPWS/T2CAS D/O (3)

WARNING MODES (continued)

TERRAIN CLEARANCE FLOOR (TCF)

The Terrain Clearance Floor (TCF) is an increasing terrain clearance envelope around the airport runway to provide protection against controlled flight into terrain. The TCF alert function complements the existing Mode 4. When the TCF alert envelope is penetrated, "TOO LOW TERRAIN" is broadcasted. It is based on current A/C position, nearest the runway center point position and Radio Altitude (RA).

NOTE: The optional geometric altitude function allows the EGPWS to operate reliably throughout extreme local pressure or temperature variations from standard. The optional geometric altitude provides an accurate altitude referenced to Mean Sea Level (MSL). It is based on barometric and GPS altitude, Static Air Temperature (SAT), A/C position, RA height and terrain database.

G7508471 - G7OT0T0 - FM34D800000002

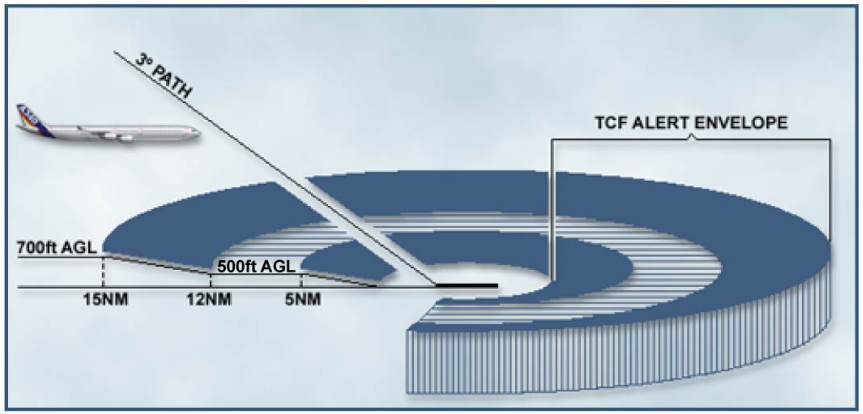

TCF ALERT ENVELOPE

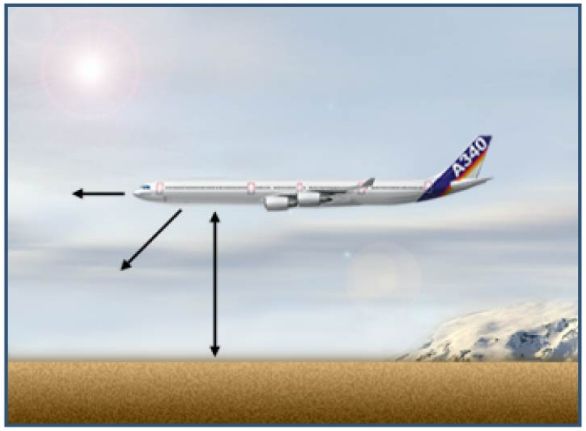

TCF

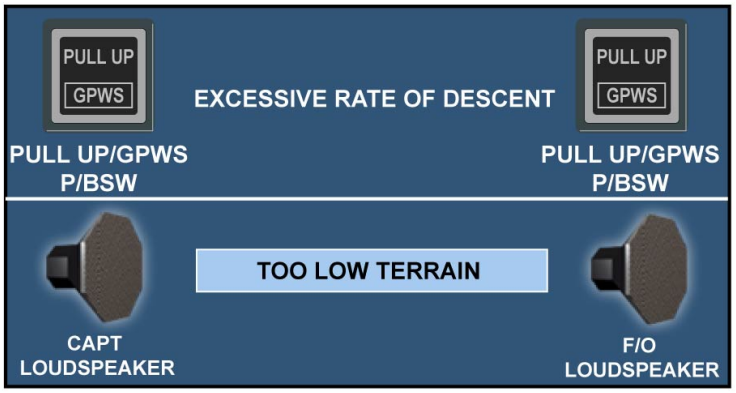

WARNING INHIBITIONS

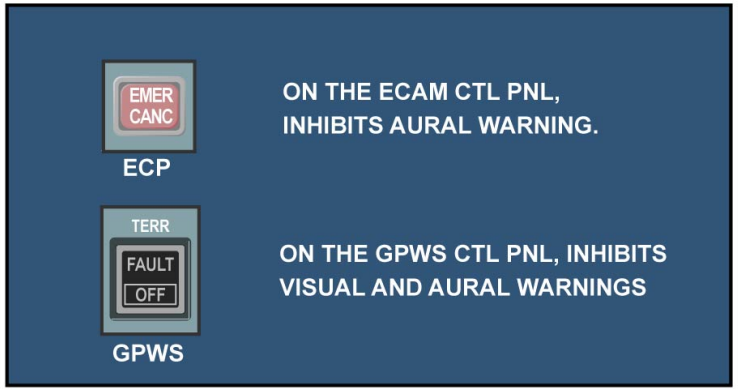

WARNING MODES - TERRAIN CLEARANCE FLOOR (TCF)

G7508471 - G7OT0T0 - FM34D800000002

TAWS/EGPWS/T2CAS D/O (3)

T2CAS

GENERAL

Optionally, the aircraft may be equipped with the Terrain and Traffic Collision Avoidance System (T2CAS). The T2CAS is a new system, which replaces the TCAS and the EGPWS. The T2CAS is a combination of two functions in a single Line Replaceable Unit (LRU). These functions are the TCAS (TCAS II Change 7) and the Terrain Awareness and Warning System (TAWS).

G7508471 - G7OT0T0 - FM34D800000002

Terrain and Traffic Collision Avoidance System (T2CAS)

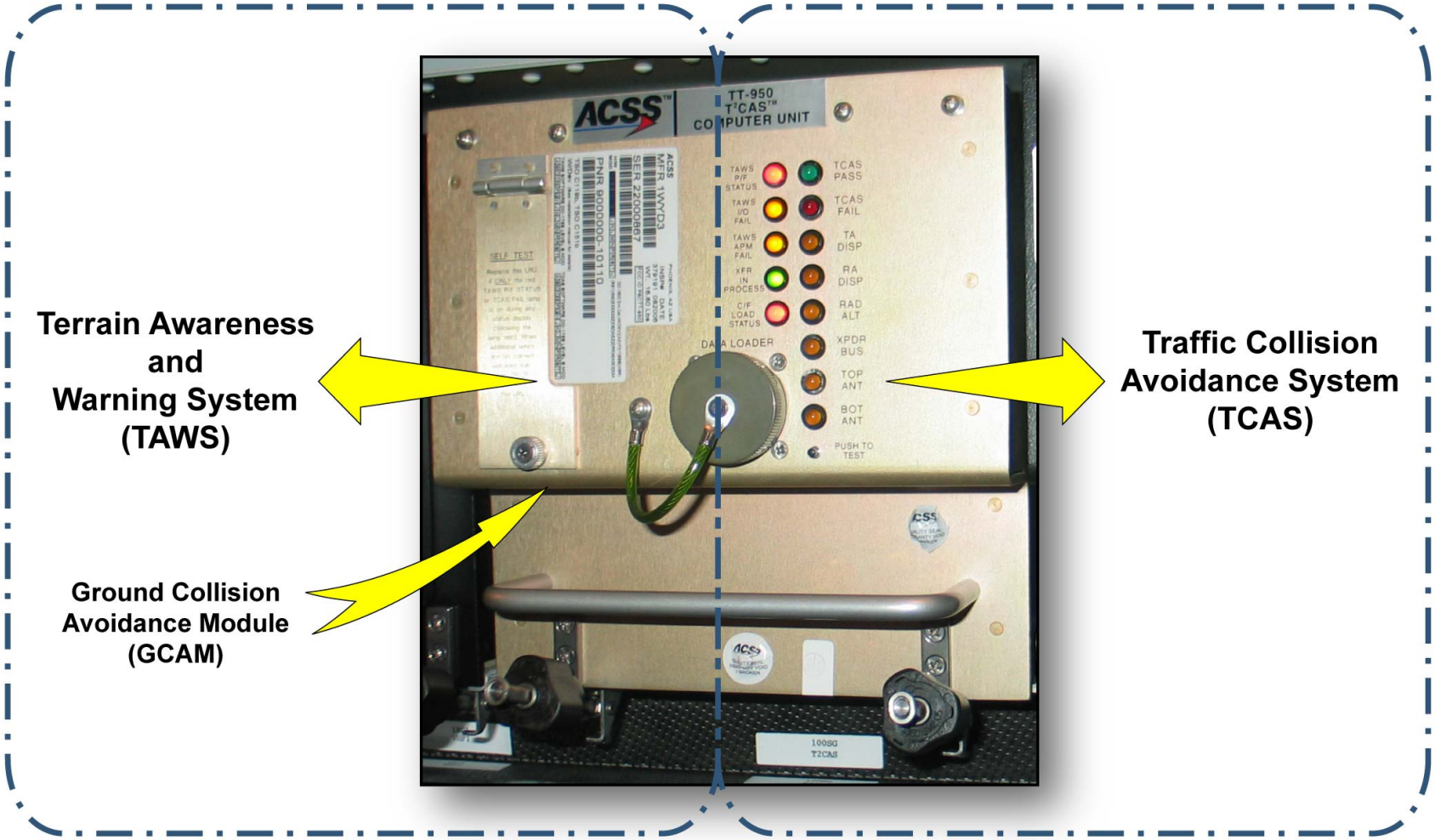

T2CAS - GENERAL

TAWS/EGPWS/T2CAS D/O (3)

T2CAS (continued)

FUNCTIONS AND INTERFACES

All cockpit hardware interfaces (lights, P/BSWs) for the T2CAS-TAWS remain identical to the EGPWS. All EGPWS inputs/outputs are conveyed to the T2CAS as well as a few dedicated T2CAS-TAWS inputs (slat/flap control lever position from SFCC 1 and engine out information from the FMGEC 1). The interfaces are also identical for the TAWS peripheral systems (FWC, DMC, CMC, FDIMU...).
The T2CAS includes partitioned modular functions for both TCAS and TAWS functions. The following alerting function are integrated in the T2CAS-TAWS part:
- basic GPWS functions (Modes 1 to 5), mainly based on Radio Altitude,
- predictive modes: Collision Prediction and Alerting (CPA) function and Terrain Hazard Display (THD) function, which provides a forward-looking terrain avoidance and premature descent alert functions.

NOTE: The basic GPWS modes 1 and 2 are automatically inhibited when CPA and THD functions are operating. Optionally, an automatic deactivation of predictive function upon navigation high/low accuracy criteria can be activated, if the TAWS logic uses the Flight Management System (FMS) 1 lateral position. When this option is activated, the predictive mode is deactivated if the navigation accuracy is low. The green "TERR STBY" ECAM memo is displayed and mode 1 and 2 are reactivated.

The Ground Collision Avoidance Module (GCAM) ensures a very low rate of nuisance alerts to keep the crew confident in the generated alerts. It addresses some specific situations such as situations of normal aircraft operation according to procedures at altitudes significantly below the surrounding local terrain height (approaches in steep valleys). If GCAM predicts that the A/C can not climb over the terrain with sufficient safety margin:
- the aural "AVOID TERRAIN" warning is triggered,
- visual black crosses are displayed in the solid red on the ND.

NOTE: The T2CAS is not compatible with the weather radar autotilt function.

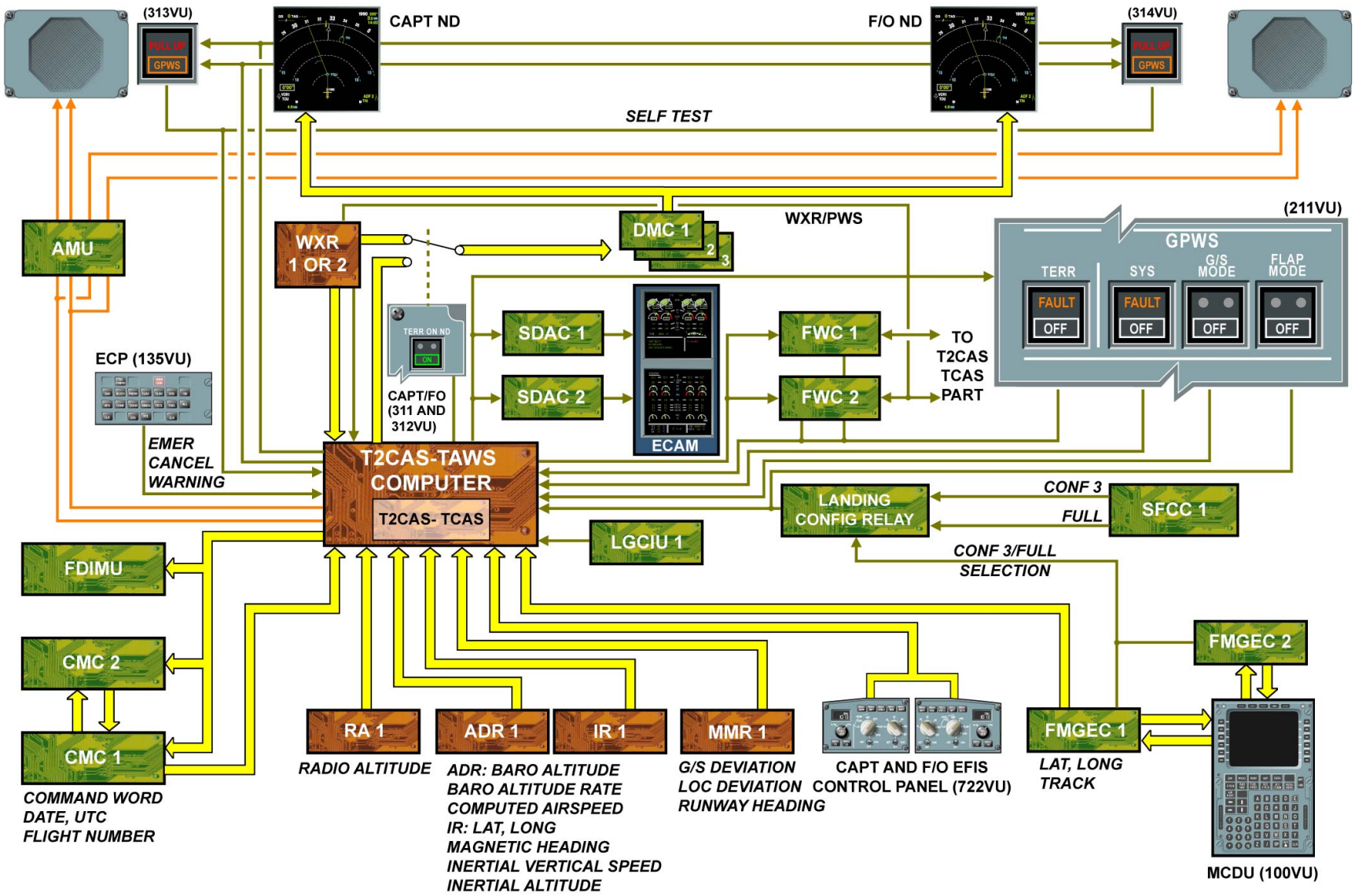

T2CAS - FUNCTIONS AND INTERFACES

G7508471 - G7OT0T0 - FM34D800000002

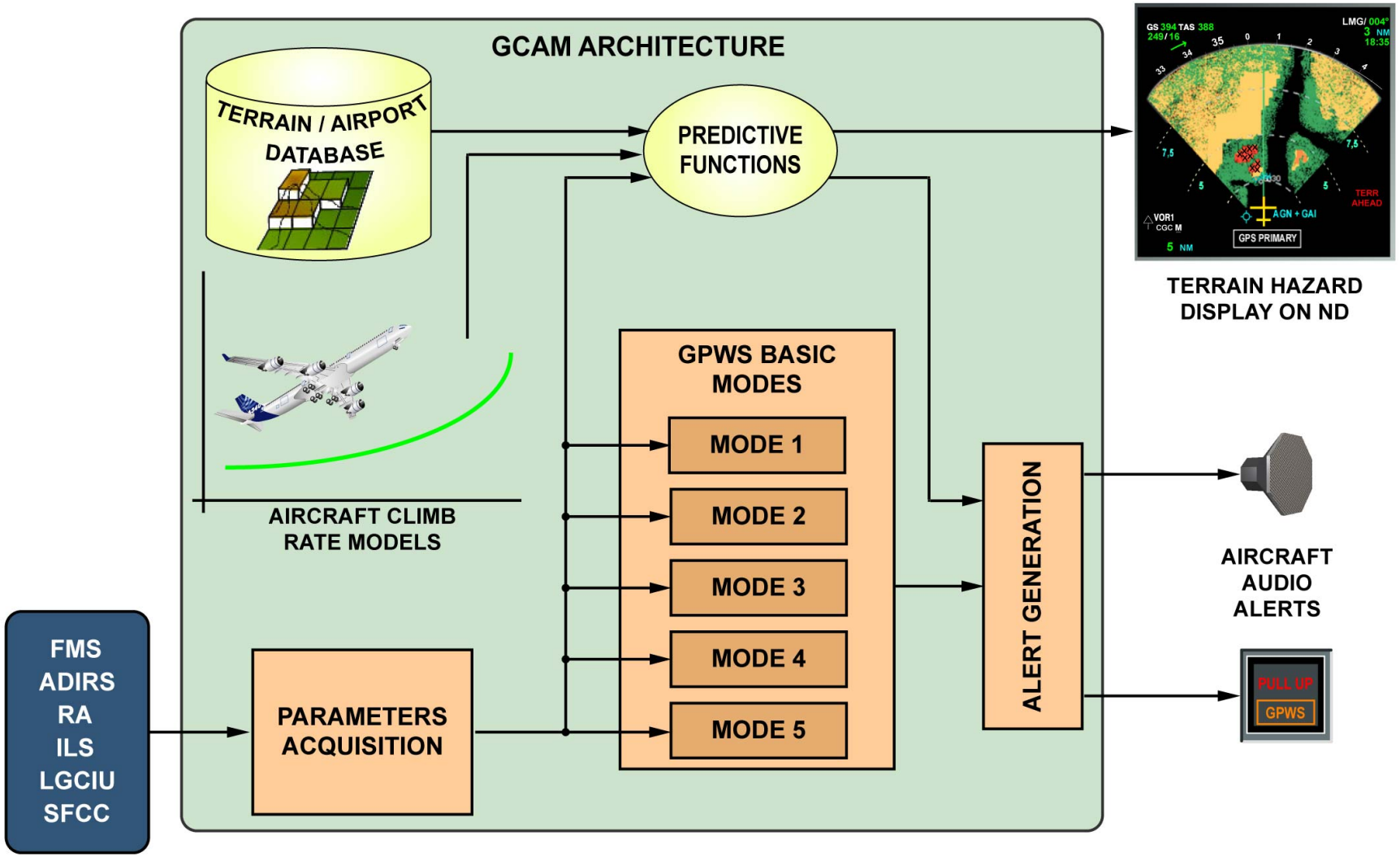

T2CAS - FUNCTIONS AND INTERFACES

G7508471 - G7OT0T0 - FM34D800000002

This Page Intentionally Left Blank

G7508471 - G7OT0T0 - FM34D800000002

TAWS/EGPWS/T2CAS D/O (3)

T2CAS (continued)

EGPWS/T2CAS DIFFERENCES

The EGPWS and T2CAS have different philosophies. The EGPWS keeps all modes active but desensitizes nuisance prone modes function of the predictive mode (TAD) integrity and aircraft location (through envelope modulation). The T2CAS inhibits mode 2 when the CPA is in normal operation and the CPA altitude cross check is correct.
The EGPWS sensor includes a vertical margin (terrain floor) function of Vz and Runway proximity. This margin is directly applied on the terrain cells for T2CAS. The EGPWS and T2CAS both use a caution and a warning sensors projected in a terrain database. EGPWS assumed that the A/C can climb 6° all the time. The T2CAS takes into account real time aircraft climb capability to provide alert with guaranteed safety margins. If this safety margins is not sufficient, the AVOID TERRAIN alert is triggered to indicate to the pilot that a turn maneuver is recommended in addition to the PULL UP warning.
The EGPWS and the T2CAS have very similar display principles (same layer colorations). Both systems provide an anticipated background display in descent (approximately 30 sec). The T2CAS has one specific feature, which is the AVOID TERRAIN display.

G7508471 - G7OT0T0 - FM34D800000002

EGPWS

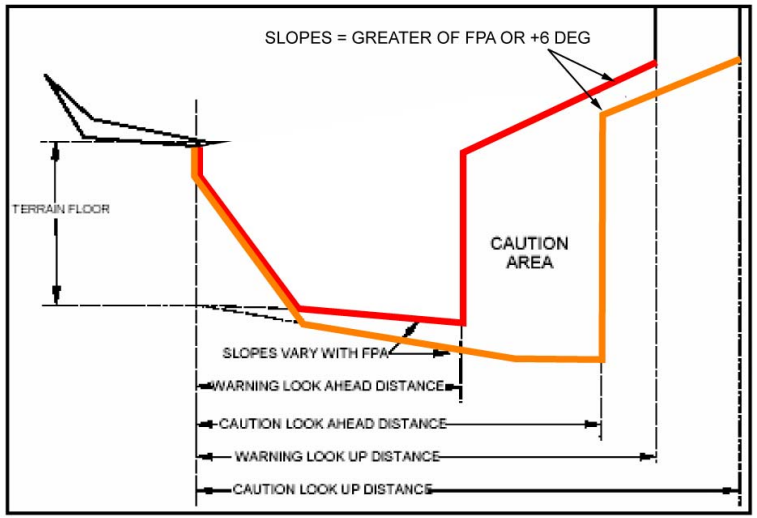

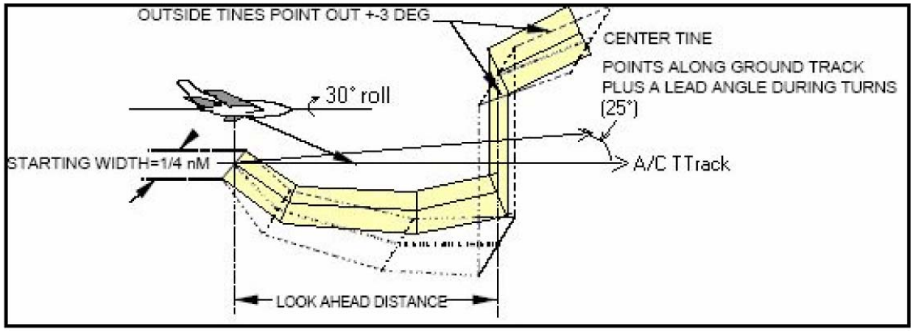

T2CAS

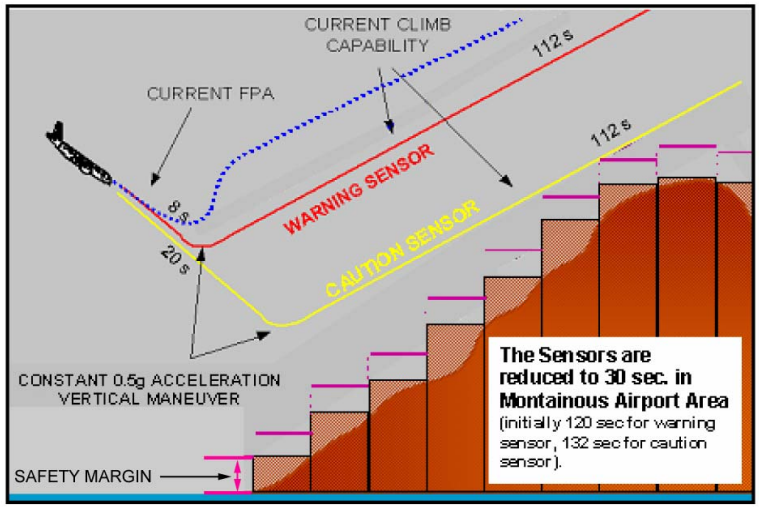

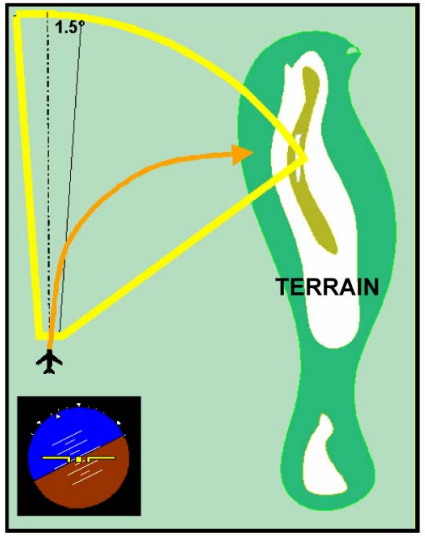

T2CAS - EGPWS/T2CAS DIFFERENCES

G7508471 - G7OT0T0 - FM34D800000002

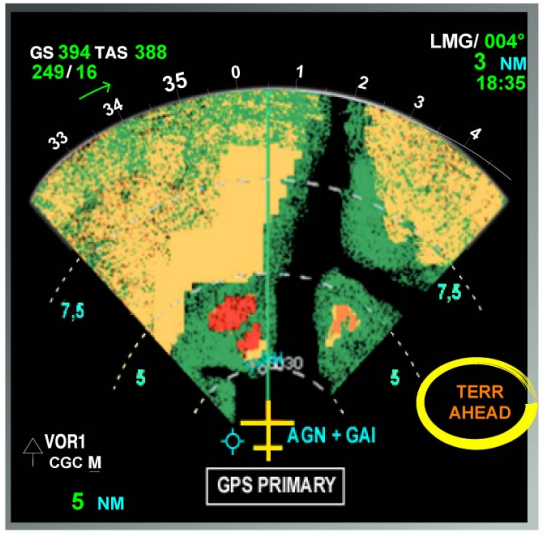

"TERRAIN AHEAD"

CAUTION

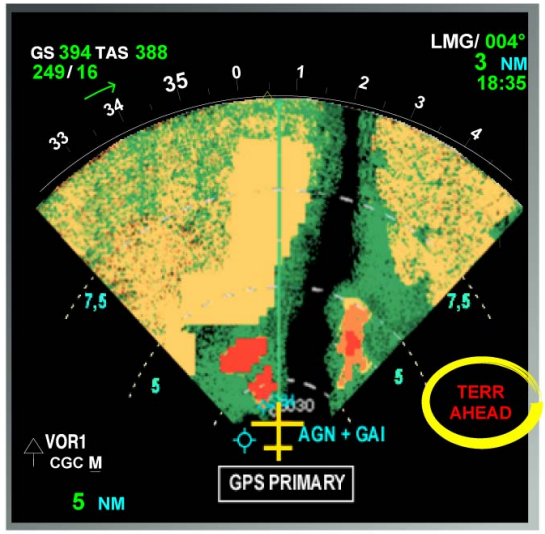

"TERRAIN AHEAD, PULL UP"

WARNING

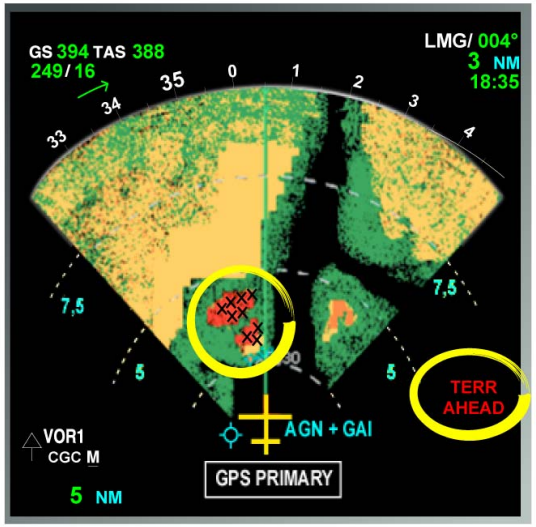

"AVOID TERRAIN"
(PRECEEDED AT LEAST BY "TERRAIN AHEAD, PULL UP")

WARNING

T2CAS - EGPWS/T2CAS DIFFERENCES

G7508471 - G7OT0T0 - FM34D800000002

This Page Intentionally Left Blank

G7508471 - G7OT0T0 - FM34D800000002

RADIO ALTIMETER D/O (3)

ANTENNAE

The transmission and reception antennae are identical. The frequency range that is used varies from 4200 Mhz to 4400 Mhz. The operating range of the antenna is limited to +30º or -30º for aircraft roll and pitch attitude.

LGCIU

The Landing Gear Control and Interface Unit (LGCIU) provides the flight/ground information, which is used by the receiver BITE module to count the flight legs.

INDICATING

In normal operation, system 1 provides the height data, up to 2.500 feet, for the CAPT PFD, and system 2 for the F/O PFD, through Display Management Computers (DMCs) 1 and 2. When a failure of one transceiver occurs, the DMCs automatically switch over to the other transceiver.

FAN

Each transceiver is cooled by an associated fan. The fan is installed under the transceiver and receives its power, 115 VAC, from the transceiver.

USERS

The Radio Altimeter (RA) information is sent to the Enhanced Ground Proximity Warning System (EGPWS) for different warnings, to the Flight Management Guidance and Envelope Computers (FMGECs) for processing data, to the Flight Warning Computers (FWCs) for call out indications and warnings, and to the Flight Control Primary Computers (FCPCs) for integration into various flight parameters. If the RA 1 system fails the EGPWS no longer receives radio altitude data.

It also sends information to the Traffic Alert and Collision Avoidance System (TCAS) for, triggering of inhibit orders in the 0 to 2.500 ft range and for the system sensitivity, and to the Weather Radar (WXR) transceivers for automatic activation of the predictive windshear function if it is activated.

CMC

The MCDUs allow the systems to be tested via the Central Maintenance Computers (CMCs). The tests are only available on ground. Some tests are inhibited on ground by signals coming from the Engine Interface and Vibration Monitoring Unit (EIVMU) when the associated engine is operating.

G7508471 - G7OT0T0 - FM34D7F34RB0202

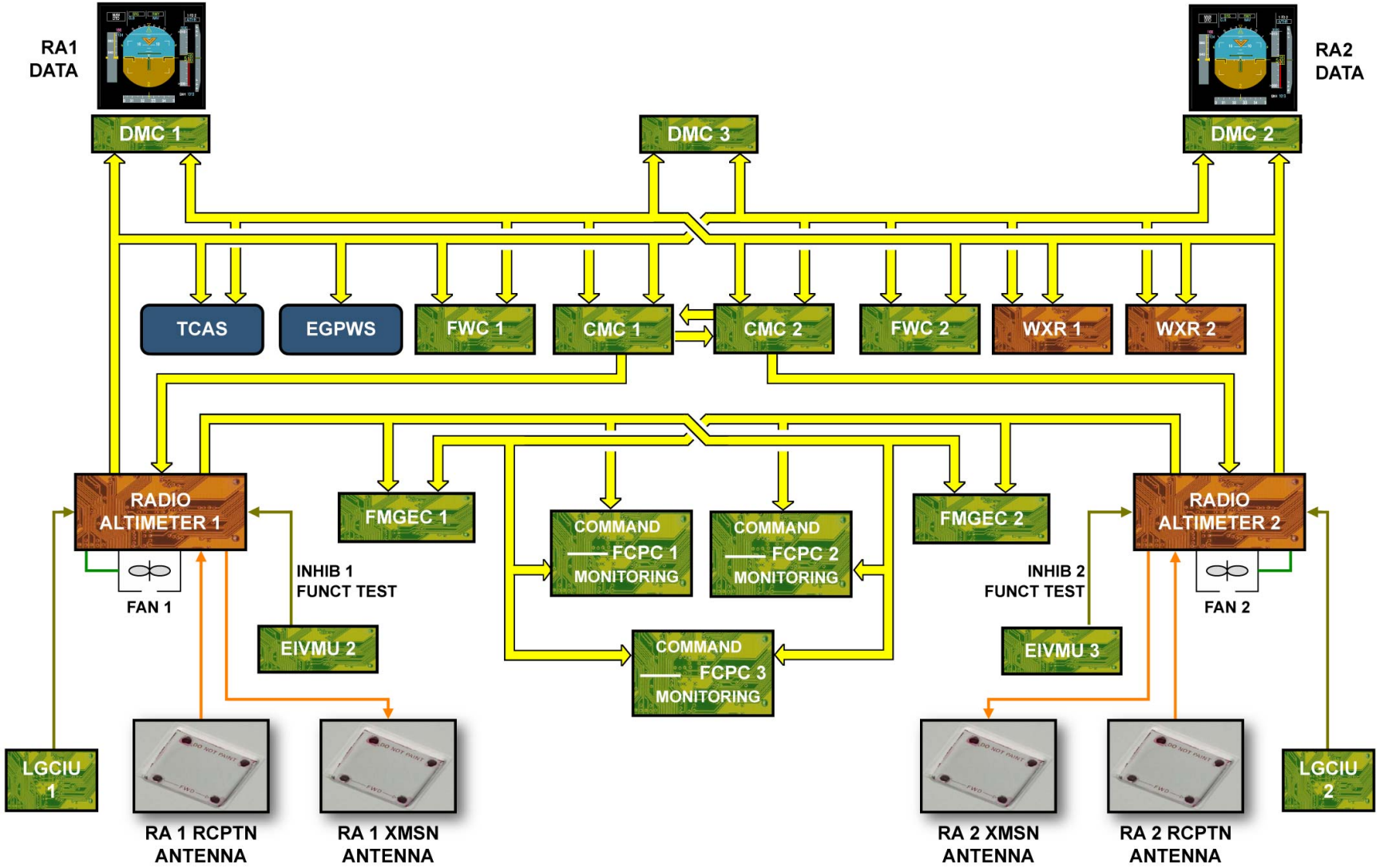

ANTENNAE ... CMC

G7508471 - G7OT0T0 - FM34D7F34RB0202

WXR/PWS D/O (3)

CONTROL UNIT

The Control Unit (CU) provides mode of operation, antenna tilt and gain of the receiver digitalized information, via an ARINC 429 bus. The transceiver start up system is ensured by a discrete signal. The CU also controls the wave guide switching.

TRANSCEIVER

The Weather Radar (WXR) uses the principle of radio echoing to detect the level of precipitation, and the principle of doppler effect to detect the turbulence areas. The transceiver operates in the x-band frequency (9345 Mhz). It digitalizes the video signal for display on the NDs.

ANTENNA

The WXR antenna is energized and controlled in azimuth and elevation by the transceiver in use. The radio frequency signals are exchanged between the transceivers and the antenna, via a wave guide. The antenna scans a 180º sector in azimuth and has a tilt coverage of + or - 15º. An internal circuit of the transceiver ensures antenna stabilization. The stabilization data are pitch and roll angles, selected tilt, antenna azimuth angle and elevation angle.

WAVE GUIDE SWITCH

The wave guide switch ensures the switching of the RF signal from the antenna to each transceiver. 2 discrete lines are used to avoid transmission on a closed wave guide.

ADIRU

The three Air Data and Inertial Reference Units (ADIRUs) give the pitch and roll angles, to ensure antenna stabilization, and the ground speed for doppler mode correction. The ADIRU, which provides data is selected by means of the Air Data and Inertial Reference System (ADIRS) switching panel.

LGCIU

The Landing Gear Control Interface Unit (LGCIU) sends a discrete signal to the transceiver. This ground/flight information is used by the receiver BITE module to count the flight legs. The L/G extended condition is used to identify a GO AROUND and to allow the audio signal transmission if needed.

INDICATING

The WXR image provided by the selected transceiver, is shown on CAPT and F/O NDs. The video signal is sent to the NDs via the Display Management Computers (DMCs), by means of two ARINC 453 buses. Each data cable is terminated at one end with a low inductance resistor (68 ohms) to avoid a signal return.
The various system controls are grouped on the WXR control unit and on the EFIS control panels of the Flight Control Unit (FCU). On either EFIS control panel of the FCU, the mode selector switch must be set to the ARC or ROSE position to obtain the image display on the corresponding ND.

CMC

The MCDUs allow the systems to be tested via the Central Maintenance Computers (CMCs). The tests are only available on ground. Only one transceiver provides information to the NDs at a time, but both transceivers are always supplied in order to achieve the maintenance function (continuous test).

RADAR MULTISCAN MODE (OPTION)

Optionally, the aircraft may be equipped with a multiscan radar transceiver. The multiscan is a radar function that display all significant

G7508471 - G7OT0T0 - FM34D9F34WC0302

weather at all ranges, at all aircraft altitude and at all times on a display that is essentially clutter-free, without the need for pilots to inputs tilt or gain settings. The multiscan reduces pilot workload, optimizes weather detection and minimizes ground clutter. The multiscan mode manages the antenna beam tilts automatically. The antenna tilts are controlled for optimum weather detection during each flight phase. Two antenna scans are performed, each scan is optimized for a particular region in front of the aircraft. The upper beam detects medium range weather and the lower beam detects short and long-range weather by automatically adjusting tilt and gain.

G7508471 - G7OT0T0 - FM34D9F34WC0302

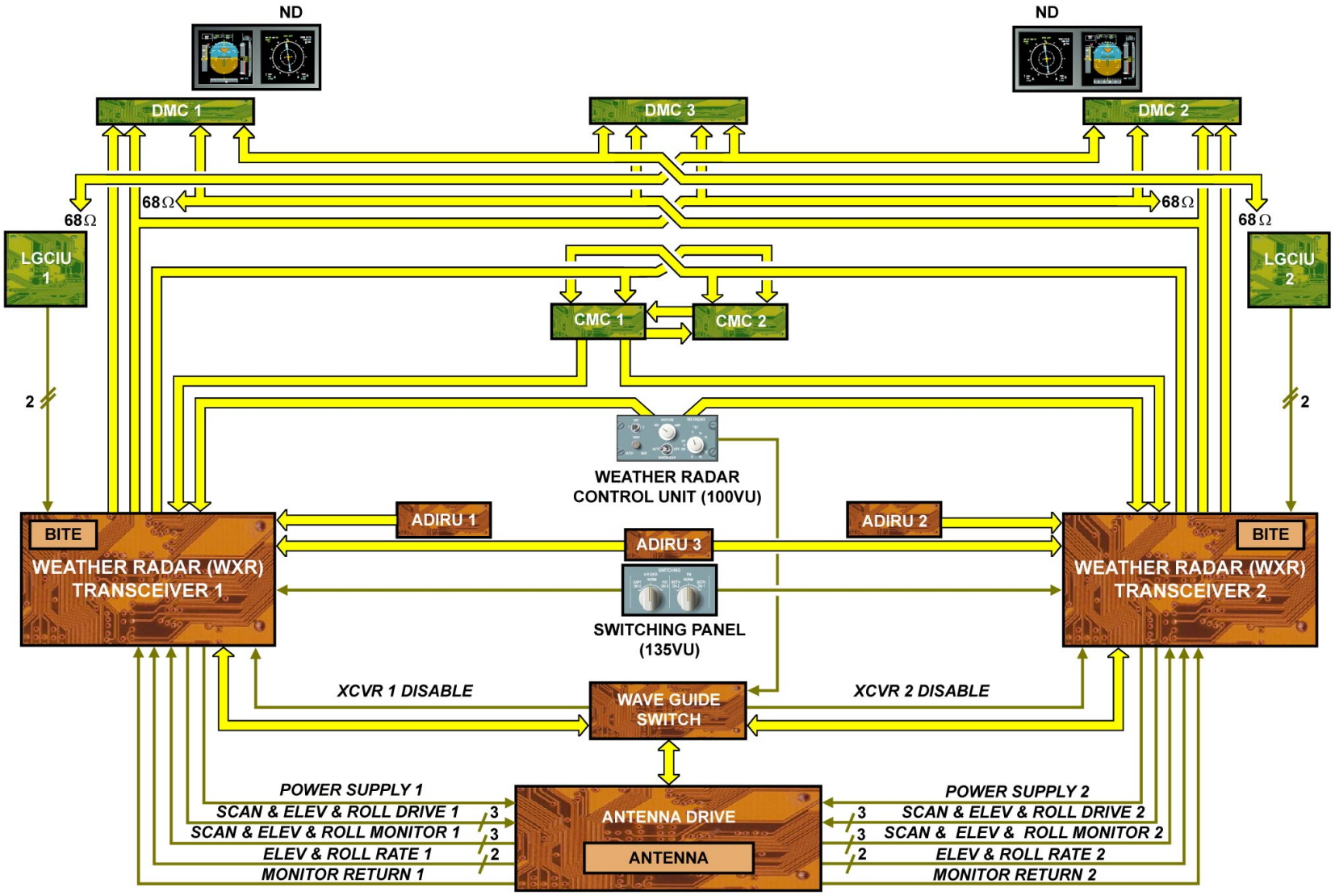

CONTROL UNIT ... RADAR MULTISCAN MODE (OPTION)

G7508471 - G7OT0T0 - FM34D9F34WC0302

This Page Intentionally Left Blank

G7508471 - G7OT0T0 - FM34D9F34WC0302

WXR/PWS D/O (3)

PREDICTIVE WINDSHEAR SYSTEM

A discrete input, provided by the WXR CU through the AUTO/OFF switch, enables the windshear function. This discrete signal is also transmitted to the three DMCs which use it for the windshear message display logic.
Two types of qualifier inputs are required to prevent automatic activation of the windshear function:
- qualifiers A1 and A2, coming from the ATC/Traffic Alert and Collision Avoidance System (TCAS) CU,
- and qualifiers B1 and B2, provided by the engine oil pressure sensors of engines.
In order to automatically activate the windshear function, one qualifier A and one qualifier B have to be valid.

NOTE: on the A330, qualifiers B1 and B2, are provided by the engine oil pressure sensors of engines 1 and 2.
on the A340, qualifiers B1 and B2, are provided by the engine oil pressure sensors of engines 2 and 3.

The RA provides the transceiver with altitude data, which is used for the automatic activation of the windshear function. An analog audio output transmits a synthetic voice alert message to the Audio Management Unit (AMU).
Audio inhibit discrete signals are used to indicate whether the aural alert output has to be active or not. The audio input discretes are used to inhibit the predictive windshear alerts. The predictive warning system audio inhibit discrete ouputs are used to inhibit other aural alerts generated by systems such as TCAS or Enhanced Ground Proximity Warning System (EGPWS), or other Flight Warning Computer (FWC) warnings.

AUTO-TILT FUNCTION (OPTION)

The Auto-Tilt Function in an option of the weather radar system. It optimizes the weather detection to minimize ground clutter and data correlation with radar returns.
The method for minimizes ground clutters is based on the utilization of the terrain altitude information from the EGPWS Database.
The EGPWS determines the optimum tilt angle for the radar according to the aircraft altitude above the terrain, the range selection and the terrain condition in the area.

NOTE: The Radar control panel with this option is not compatible with the installation of a T2CAS

G7508471 - G7OT0T0 - FM34D9F34WC0302

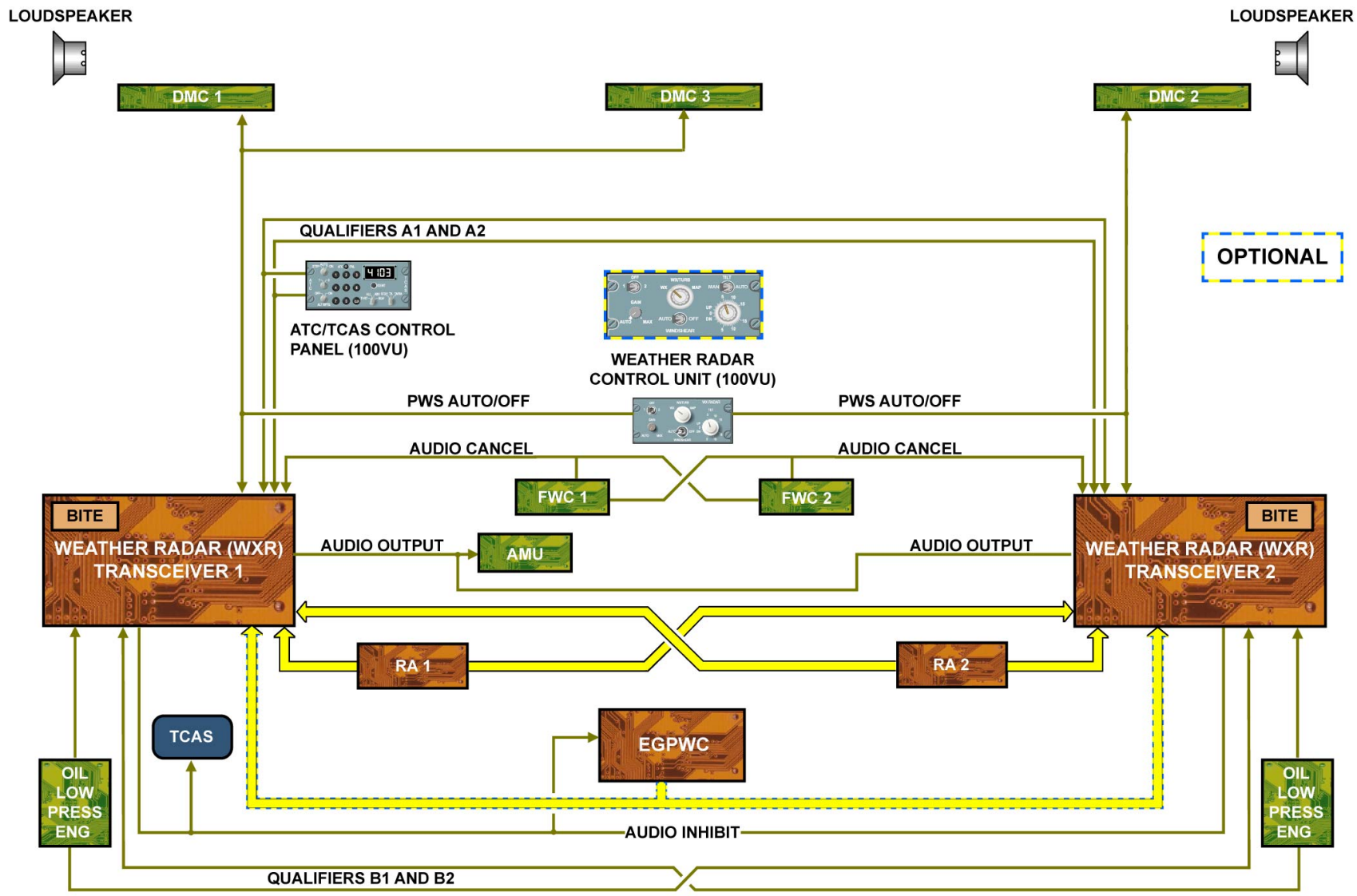

PREDICTIVE WINDSHEAR SYSTEM & AUTO-TILT FUNCTION (OPTION)

G7508471 - G7OT0T0 - FM34D9F34WC0302

ATC/TCAS D/O (3)

TCAS PRINCIPLE

The Traffic Alert and Collision Avoidance System (TCAS) detects and displays aircraft in the immediate vicinity and provides the flight crew with indications to avoid these intruders by changing the flight path in the vertical plan only. The first aircraft to detect the other one initiates the communication procedure and indicates the maneuver to perform. The TCAS will generate two types of warnings: the Traffic Advisories (TA) and the Resolution Advisories (RA).

G7508471 - G7OT0T0 - FM34D0F34CC0102

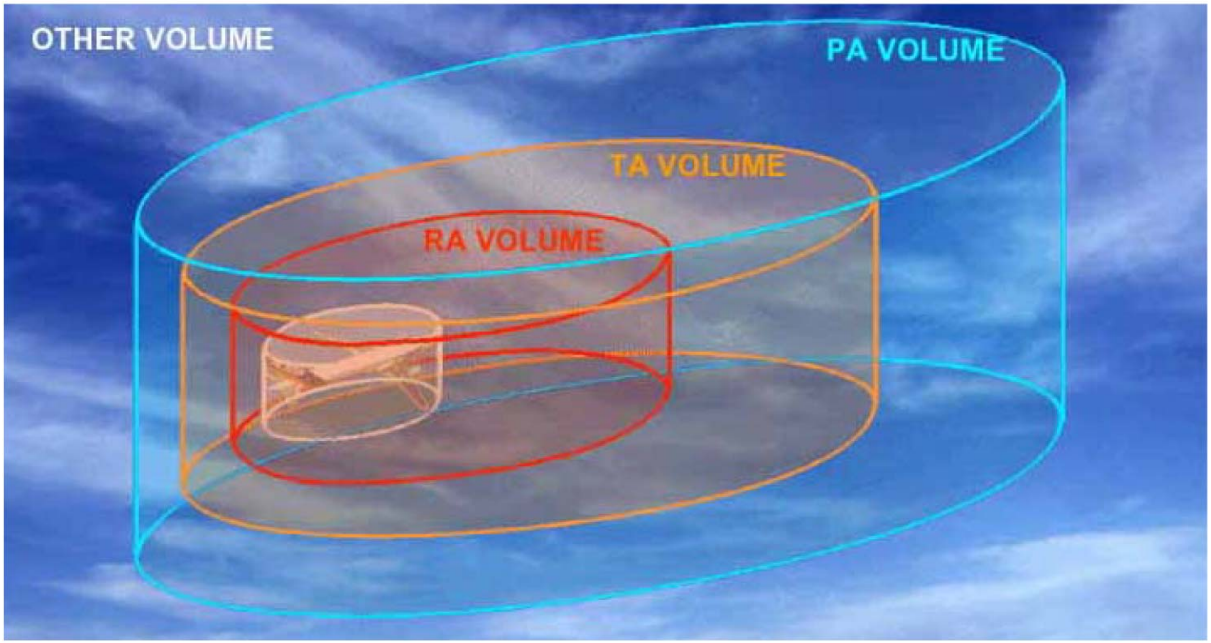

DETECTION VOLUME	INTRUDER POSITION	INFORMATION DISPLAYED
Other intruders	No collision threat, closer than 30 Nm	On ND, intruder position
Proximate (PA)	No collision threat, closer than 6 Nm in lateral and +/- 1200 ft in vertical	On ND, intruder position
Traffic Advisory (TA)	Potential collision threat	On ND, intruder position and aural messages
Resolution Advisory (RA)	Real collision threat	On ND, intruder position, aural messages and avoidance maneuver orders on PFD

TCAS PRINCIPLE

G7508471 - G7OT0T0 - FM34D0F34CC0102

ATC/TCAS D/O (3)

ATC/TCAS OPERATION

The TCAS periodically transmits interrogation signal for all ATC ground station and mode S transponder equipped aircraft in the vicinity. In response to these interrogations, the transponders of nearby aircraft return signals containing their altitude value. The TCAS computes the range between the two aircraft by measuring the elapsed time between transmission of the interrogation and reception of the reply.

G7508471 - G7OT0T0 - FM34D0F34CC0102

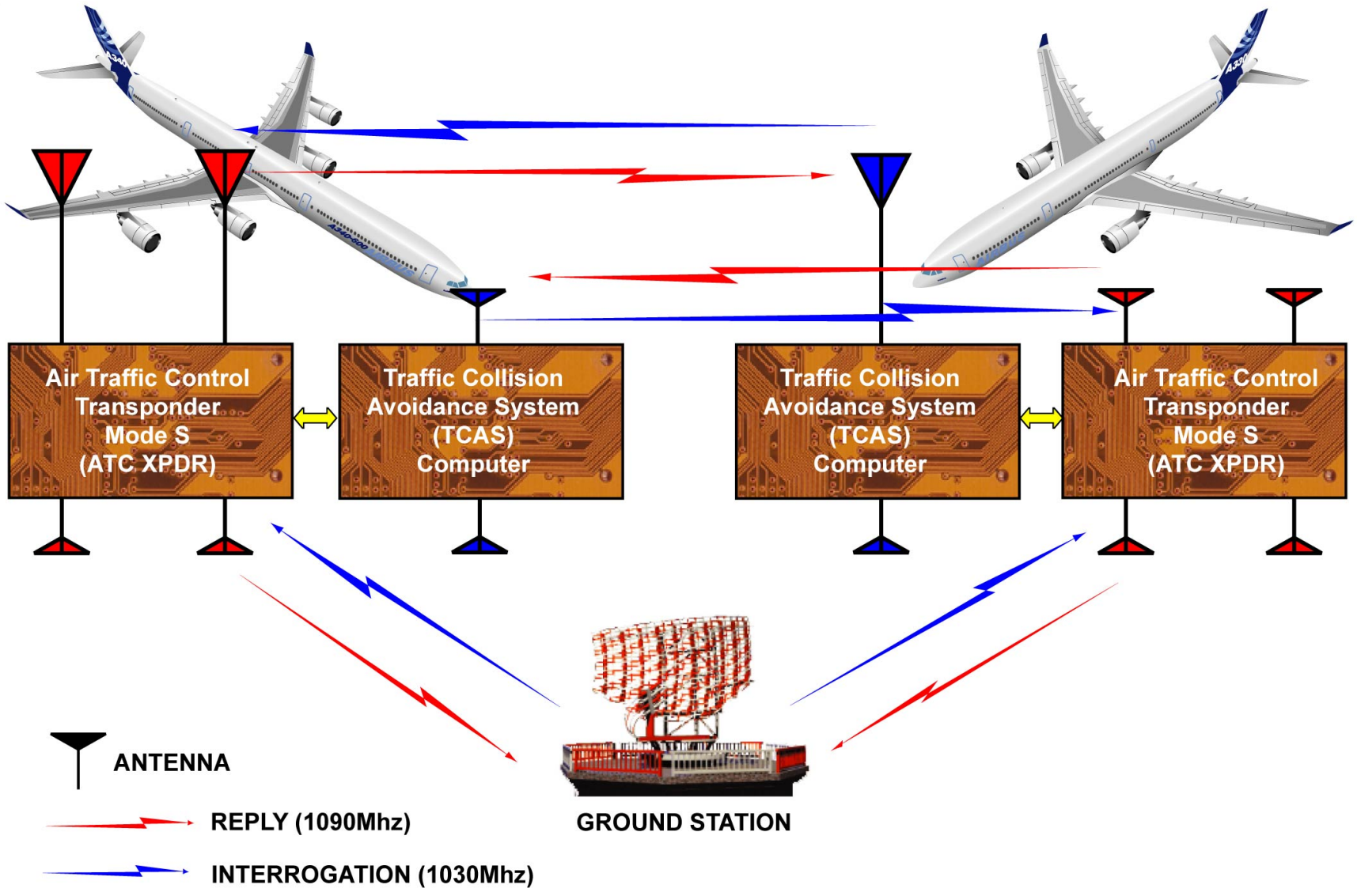

ATC/TCAS OPERATION

G7508471 - G7OT0T0 - FM34D0F34CC0102

ATC/TCAS D/O (3)

ATC ANTENNAE

The Air Traffic Control (ATC) antennae transmit replies to interrogations from ATC ground stations or Traffic Collision Avoidance System (TCAS) equipped A/C. The transponder switches between top and bottom antennae according to the characteristics of the received signals. The ATC antennae receive at 1030 MHz and transmit at 1090 MHz. Each second a squitter message is transmitted alternatively by the top and bottom antennae.

TCAS ANTENNAE

The TCAS has two antennae for transmission and reception. The TCAS switches reception and transmission circuits between the top and bottom antennae. The TCAS antennae transmit at 1030 MHz and receive at 1090 MHz. Communications between two A/C are always crossed between transponders and TCAS: TCAS to ATC, then ATC to TCAS. The antennae provide azimuth information on aircraft located within the TCAS surveillance range.

ATC/TCAS CONTROL PANEL

A unique ATC/TCAS control panel controls both systems. The ATC transponder is directly controlled, and the TCAS computer is controlled through the ATC transponder. On one hand the ATC/TCAS control panel receives monitor lamps discrete signals from the ATC transponder and AIR/GROUND discrete signals from the Landing Gear Control and Interface Unit (LGCIU). On the other hand it sends AIR/GROUND and STBY/ON discrete signals to ATC transponders.

NOTE: According to your aircraft configuration, the ATC/TCAS control panel may be different. The ATC/TCAS control panel with keyboard can be replaced by the ATC/TCAS control panel with rotary switches, which give the possibility to activate the "full time display" and "above/below" functions.

ATC TRANSPONDER

Various systems provide data to the transponder. Air Data Inertial Reference Units (ADIRUs) 1 and 2 provide baro altitude to their associated transponders. ADIRU 3 is in standby and will be used according to the AIR DATA switch status. In normal operation, one ATC transponder is operating as the other one is in standby.
The Flight Management Guidance and Envelope Computers (FMGECs) provide flight identification. This data will be transmitted to an ATC ground station after a mode S interrogation. The LGCIUs provide ground/flight data to the ATC/TCAS control panel for AUTO mode of ATC transponder and BITE purposes. As ATC, TCAS and Distance Measuring Equipment (DME) operate in the same frequency range, a suppressor signal is transmitted by the operating system to inhibit the other systems and to prevent simultaneous transmission.

NOTE: The interfaces between the ATC and the Air Traffic Service Unit (ATSU), the Flight Control Unit (FCU) and the Inertial Reference (IR) part of the Air Data/Inertial Reference Unit (ADIRU) are installed for enhanced surveillance/extended squitters.

TCAS COMPUTER

Various systems give data to the TCAS computer. ADIRU1 gives heading, pitch and roll data. FMGEC1 gives A/C performance limitations for resolution advisory computation. The Radio Altimeters (RA) gives radio altitude, which is mainly used in sensitivity level computation. One RA signal is used as the other one is in standby. LGCIU1 gives ground/flight and L/G extended data for TCAS operation and BITE functions.
TCAS RA triggers automatically the Flight Director and Autopilot Mode (AP/FD TACS Mode)

ATC/TCAS LINK

The operative ATC transponder transmits data to the TCAS such as baro altitude, TCAS controls from the control panel, TCAS BROADCAST MESSAGE received and coordination messages during a coordinated resolution advisory. The TCAS transmits data to the ATC transponder to reply to a mode S interrogation and coordination messages during a coordinated resolution advisory.

G7508471 - G7OT0T0 - FM34D0F34CC0102

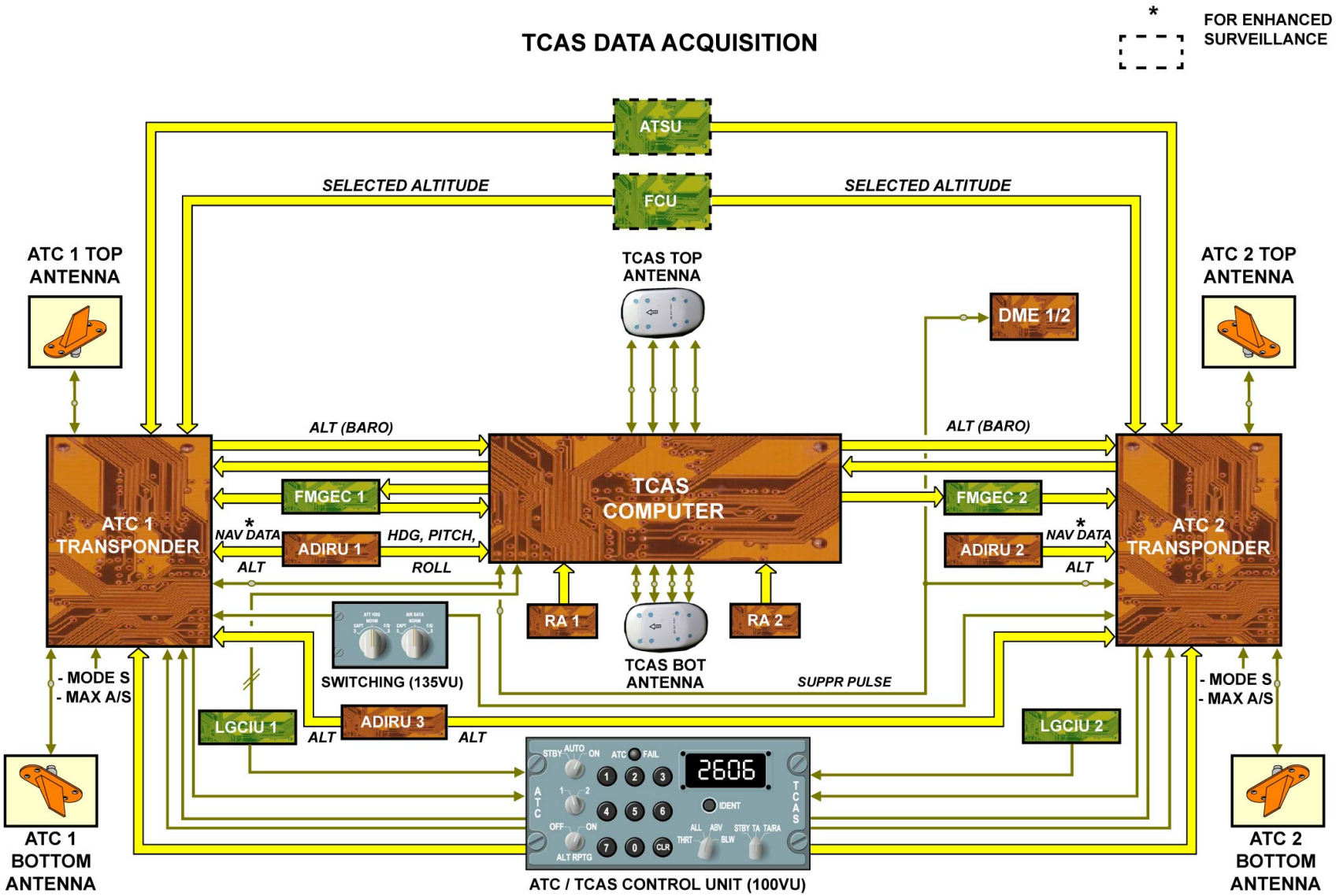

ATC ANTENNAE ... ATC/TCAS LINK

G7508471 - G7OT0T0 - FM34D0F34CC0102

This Page Intentionally Left Blank

G7508471 - G7OT0T0 - FM34D0F34CC0102

ATC/TCAS D/O (3)

TCAS INDICATING

The TCAS gives visual data on PFDs and NDs. The NDs give indication on the location of intruders. The PFDs give to the flight crew vertical speed correction data to avoid the intruders (corrective and preventive). The Flight Warning Computers (FWCs) check the signal validity. A synthesized voice generator transmits messages from a Read Only Memory to generate aural advisories through the Audio Management Unit (AMU). The display is authorized in three possible ranges (relative altitude):
- above: - 2700 ft to 9900 ft,
- below: -9900 ft to 2700 ft,
- normal: -2700 ft to 2700 ft.

G7508471 - G7OT0T0 - FM34D0F34CC0102

PFD

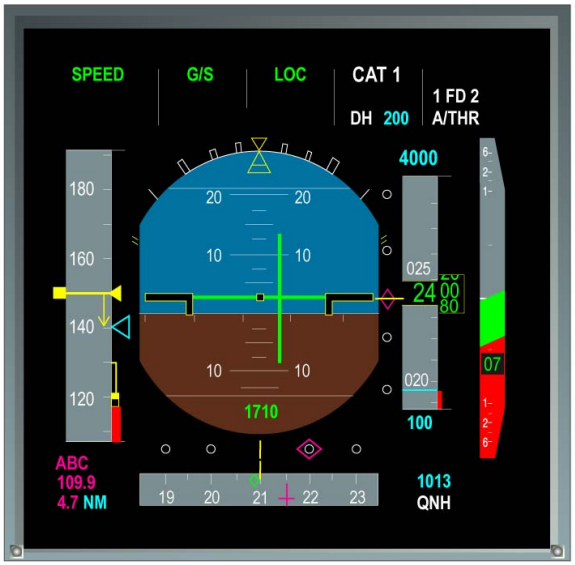

ND

FORBIDDEN
Vertical Speed (V/S)

"FLY TO"
Vertical Speed (V/S)

LOUDSPEAKERS

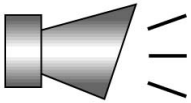

INTRUDERS

- **OTHER TRAFFIC**
- **PROXIMATE TRAFFIC**
- **TRAFFIC ADVISORY**
- **RESOLUTION ADVISORY**

TCAS INDICATING

G7508471 - G7OT0T0 - FM34D0F34CC0102

ATC/TCAS D/O (3)

TCAS INHIBITION

Systems with higher priority than TCAS can inhibit advisories via discrete lines, they are:
- windshear/stall warnings from FWCs,
- Predictive WindShear (PWS) through a discrete line from Radars.
- warnings from the Enhanced Ground Proximity Warning System (EGPWS) through 2 discrete lines,

CMC

The MCDUs allow the ATC system and TCAS to be tested via the Central Maintenance Computer (CMC). The tests are only available on ground.

PIN PROGRAMMING

Some pin programs define the operating mode of ATC transponders and TCAS computer. The following ATC discrete pin program inputs are used:
- mode S address,
- A/C maximum airspeed.

The following TCAS discrete pin program inputs are used:
- audio level output (high or low),
- number of intruders displayed,
- A/C altitude limit, ground display mode (traffic advisory only),
- proximate A/C displayed only when traffic advisory or resolution advisory occurs.

G7508471 - G7OT0T0 - FM34D0F34CC0102

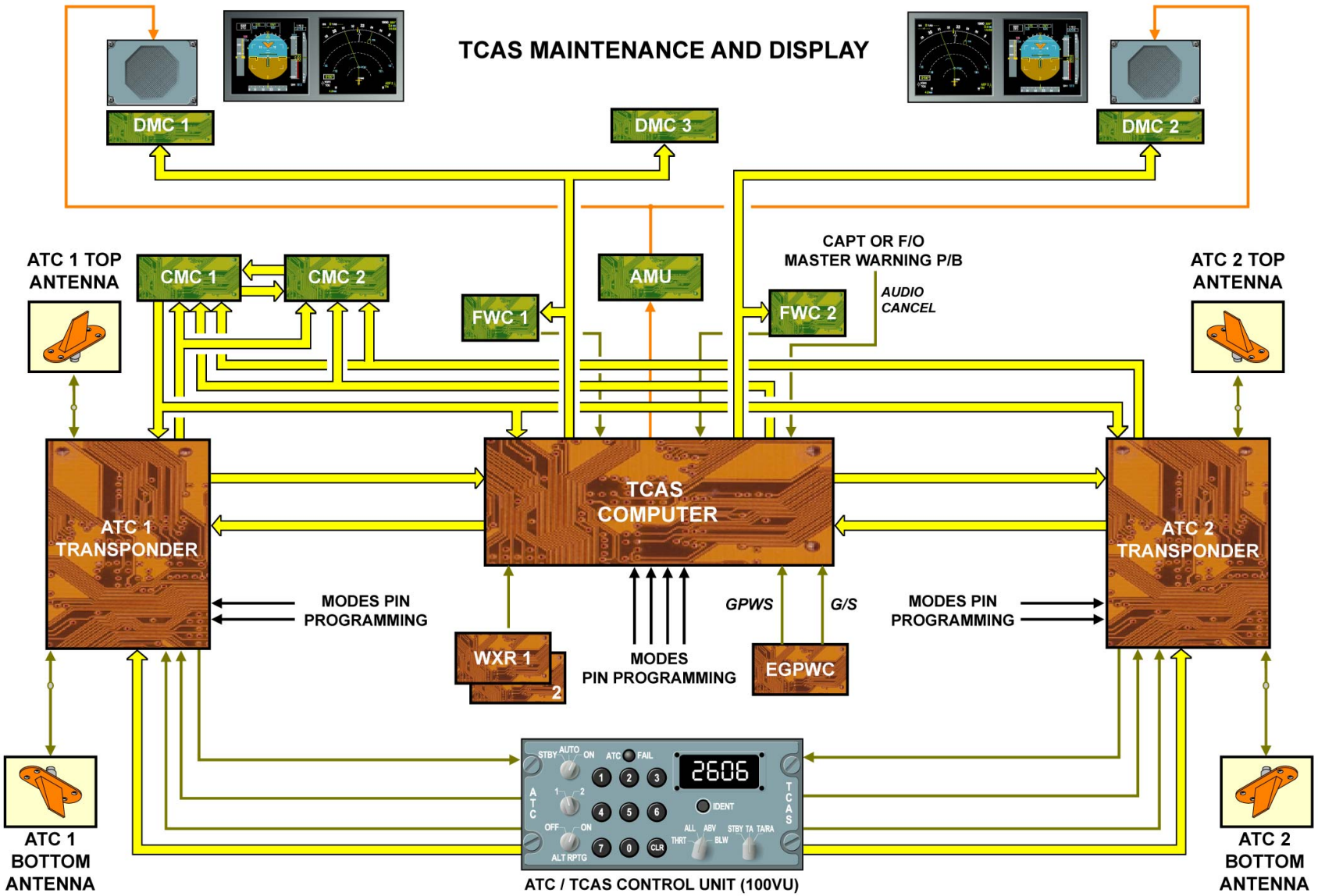

TCAS INHIBITION ... PIN PROGRAMMING

G7508471 - G7OT0T0 - FM34D0F34CC0102

ATC/TCAS D/O (3)

T2CAS

GENERAL

Optionally, the aircraft may be equipped with the Terrain and Traffic Collision Avoidance System (T2CAS). The T2CAS is a new system, which replaces the TCAS and the EGPWS. The T2CAS is a combination of two functions in a single Line Replaceable Unit (LRU). These functions are the TCAS (TCAS II Change 7) and the Terrain Awareness and Warning System (TAWS).

G7508471 - G7OT0T0 - FM34D0F34CC0102

Terrain and Traffic Collision Avoidance System (T2CAS)

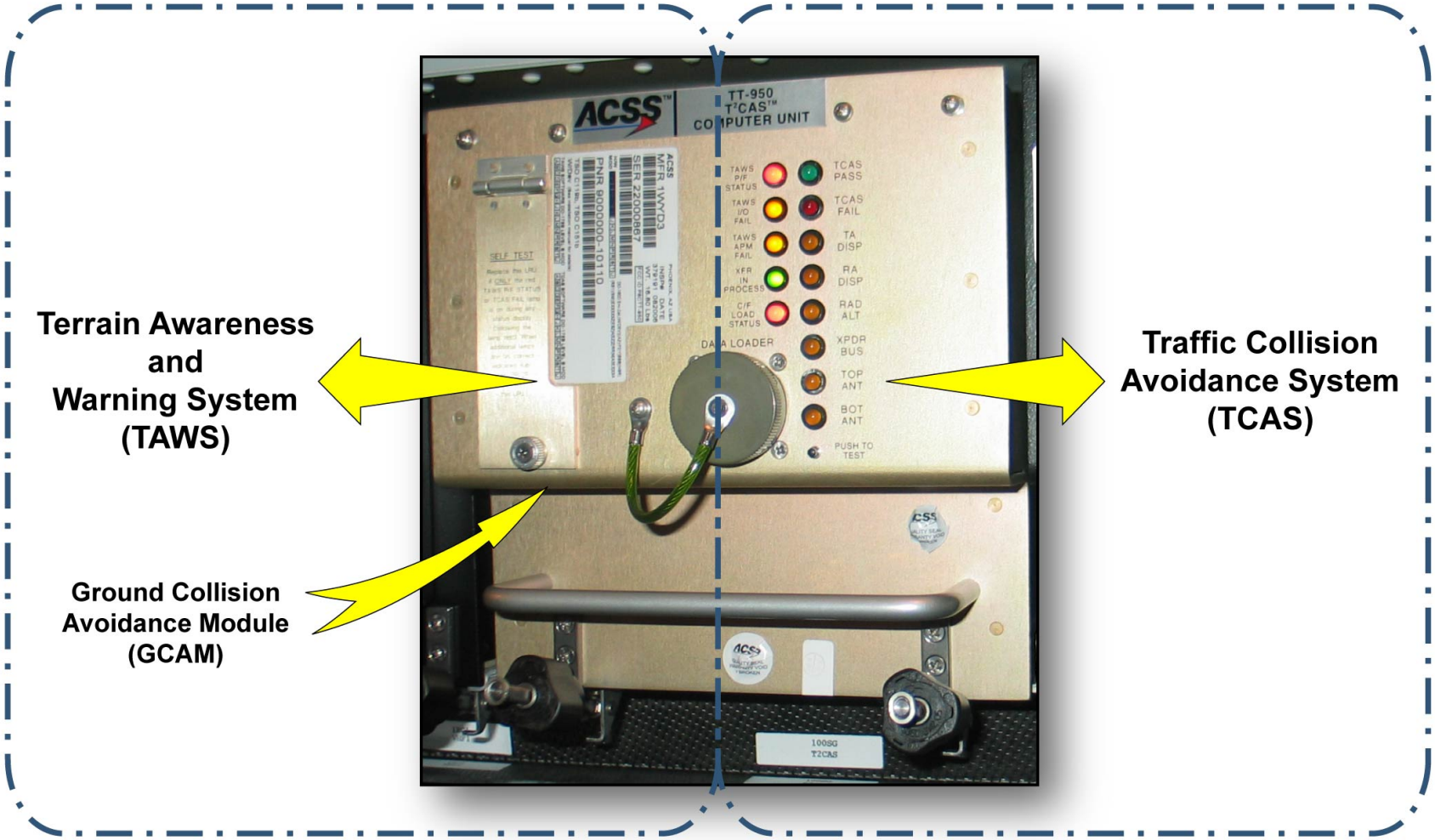

T2CAS - GENERAL

ATC/TCAS D/O (3)

T2CAS (continued)

FUNCTION AND INTERFACES

The T2CAS-TCAS function is equivalent to the TCAS II Change 7. The interfaces are also identical, except for the TCAS advisories inhibition done by the TAWS-part of the T2CAS through discretes looped at the back of the computer.

G7508471 - G7OT0T0 - FM34D0F34CC0102

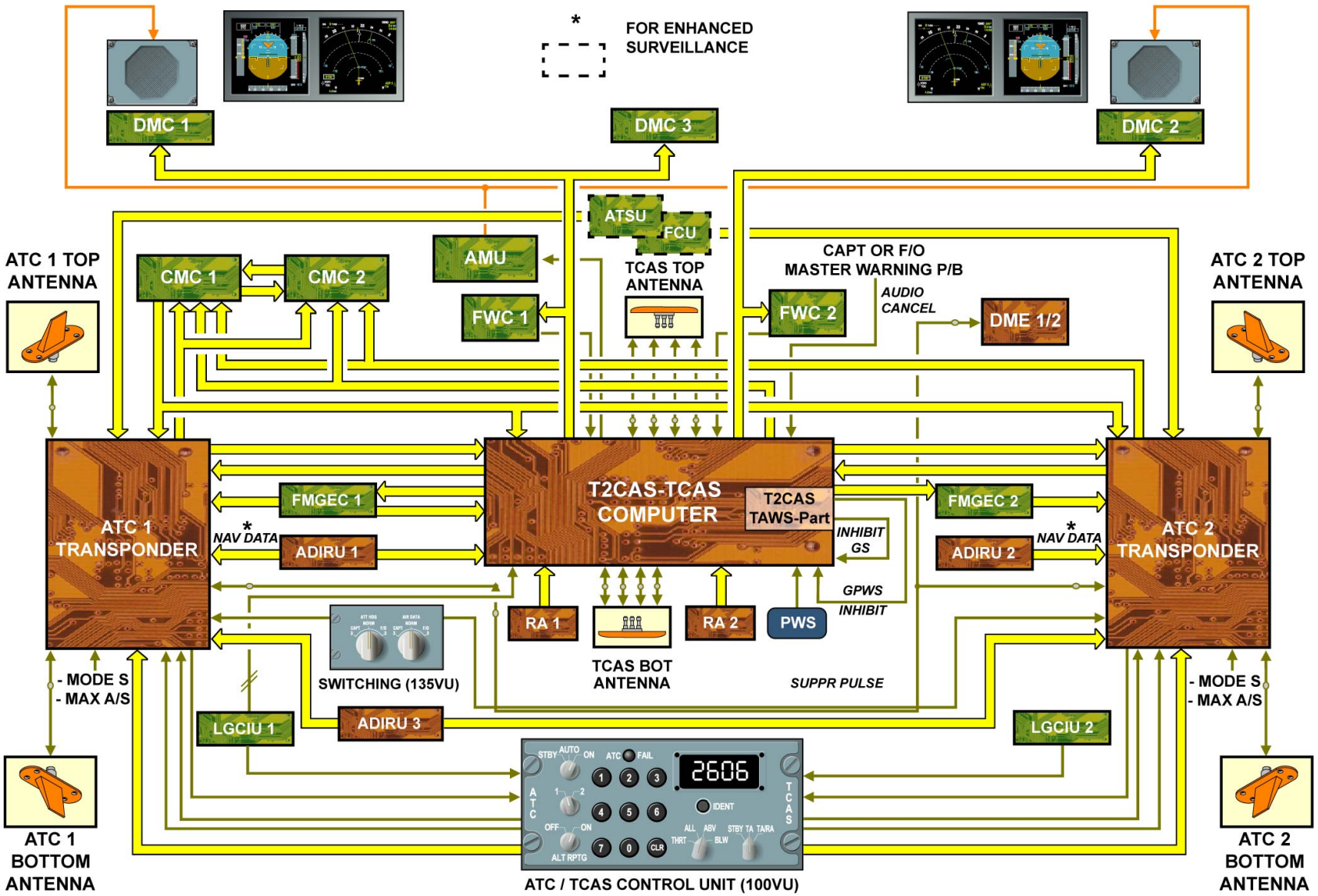

T2CAS - FUNCTION AND INTERFACES

G7508471 - G7OT0T0 - FM34D0F34CC0102

AIRBUS S.A.S.
31707 BLAGNAC cedex, FRANCE
STM
REFERENCE G7508471
NOVEMBER 2008
PRINTED IN FRANCE
AIRBUS S.A.S. 2008
ALL RIGHTS RESERVED

AN EADS COMPANY

A330-200/300
TECHNICAL TRAINING MANUAL
MAINTENANCE COURSE - T1 (LVL 2&3) (RR Trent 700)
OXYGEN

This document must be used for training purposes only

Under no circumstances should this document be used as a reference

It will not be updated.

All rights reserved
No part of this manual may be reproduced in any form,
by photostat, microfilm, retrieval system, or any other means,
without the prior written permission of AIRBUS S.A.S.

AIRBUS Environmental Recommendation
Please consider your environmental responsability before printing this document.

OXYGEN

Oxygen System Line Maintenance Briefing (2) 2

CREW OXYGEN

Flight Crew Oxygen System D/O (3) 48

PASSENGER OXYGEN

Passenger Oxygen System D/O (3) 70
Passenger Gaseous Oxygen System D/O (3) 76

OXYGEN SYSTEM LINE MAINTENANCE BRIEFING (2)

SYSTEM OVERVIEW

CREW OXYGEN SUPPLY

The flight crew oxygen is stored in a High Pressure (HP) oxygen cylinder. This cylinder is located in the avionics compartment and placed in a cradle. The HP oxygen cylinder can be isolated for maintenance by a manual ON/OFF valve. The oxygen is supplied to the flight crew stations through a distribution circuit. HP is reduced to LP by the pressure regulator/transmitter. LP oxygen flows via the LP supply valve to the distribution manifold from where the mask stowage boxes in the cockpit are supplied. Each mask stowage box has a full-face quick donning mask. The LP supply valve can be switched off from the cockpit for maintenance action as well as in ground configuration. The system is protected if an overpressure occurs in a high or low-pressure circuit. The overpressure is vented overboard. The oxygen pressure condition is indicated on the DOOR/OXY page of the ECAM system. A test port is used for distribution leakage tests and a filling port is used for the refilling of oxygen without removal of the oxygen cylinder.

G7508471 - G3NT1T0 - FM35B1000000001

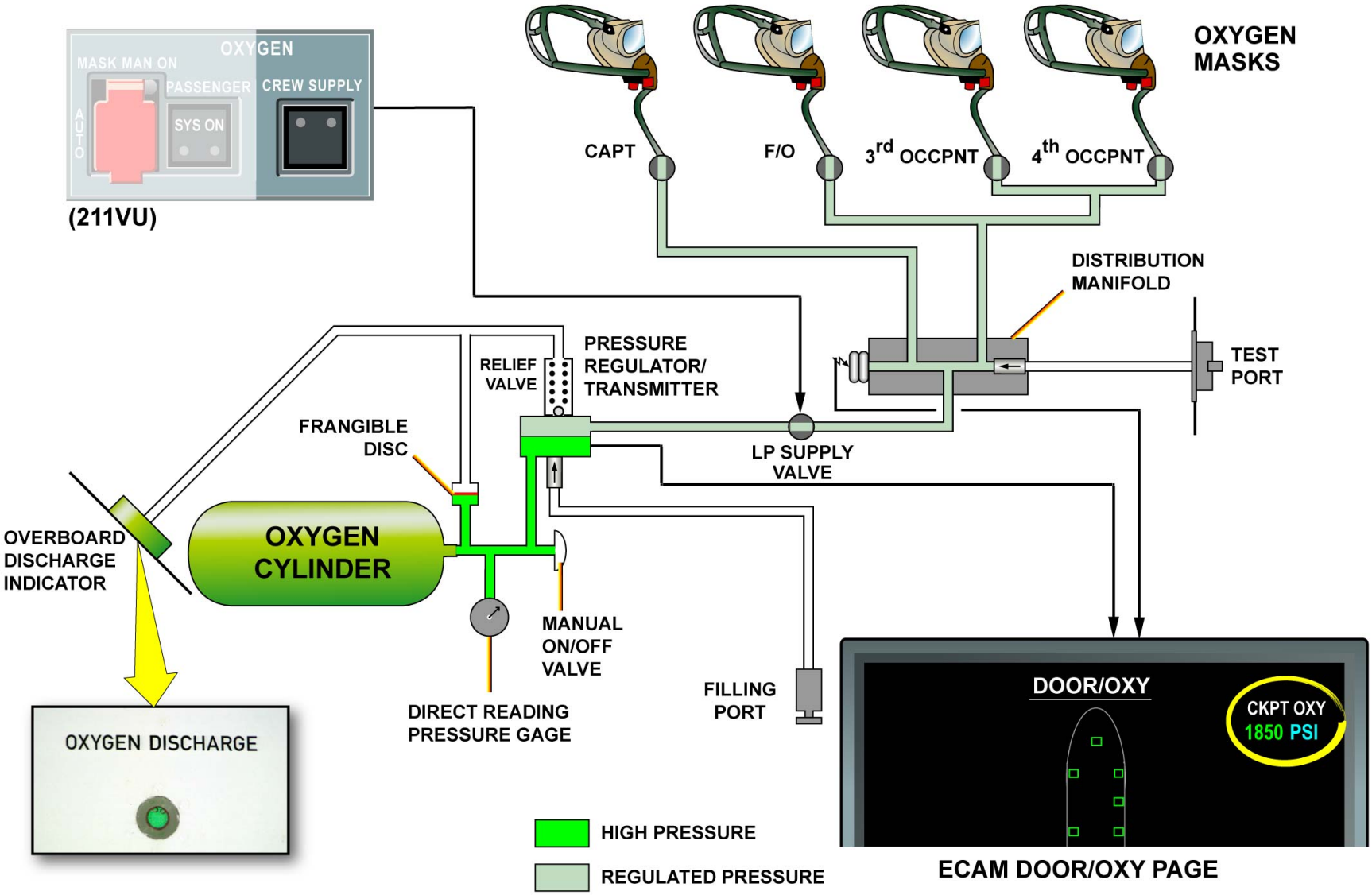

SYSTEM OVERVIEW - CREW OXYGEN SUPPLY

G7508471 - G3NT1T0 - FM35B100000001

OXYGEN SYSTEM LINE MAINTENANCE BRIEFING (2)

SYSTEM OVERVIEW (continued)

CREW OXYGEN MASKS

The pilot oxygen masks are put in a storage box on both side consoles. To use the mask the crew member squeezes the red grips to pull the mask out of the box, and this action causes the mask harness to inflate to put the mask on. With the mask in position and the red grips released, the oxygen mask will be supplied with oxygen. A mask-mounted regulator supplies a mixture of air and oxygen or pure oxygen, or gives emergency pressure control. With the regulator set to Normal, the user breathes a mixture of cabin air and oxygen up to the cabin altitude at which the regulator supplies 100% oxygen on demand. The user can select 100%, in that case the regulator supplies pure oxygen at all cabin altitudes on demand. Depending on the situation, the user can turn the EMERGENCY rotating knob to receive pure oxygen under pressure. The EMERGENCY rotating knob will also be used for a specific system test by pushing it. A flow blinker indicates oxygen flow. The PRESS TO TEST AND RESET control button lets the oxygen flow be tested as well as reset the oxygen system.

G7508471 - G3NT1T0 - FM35B1000000001

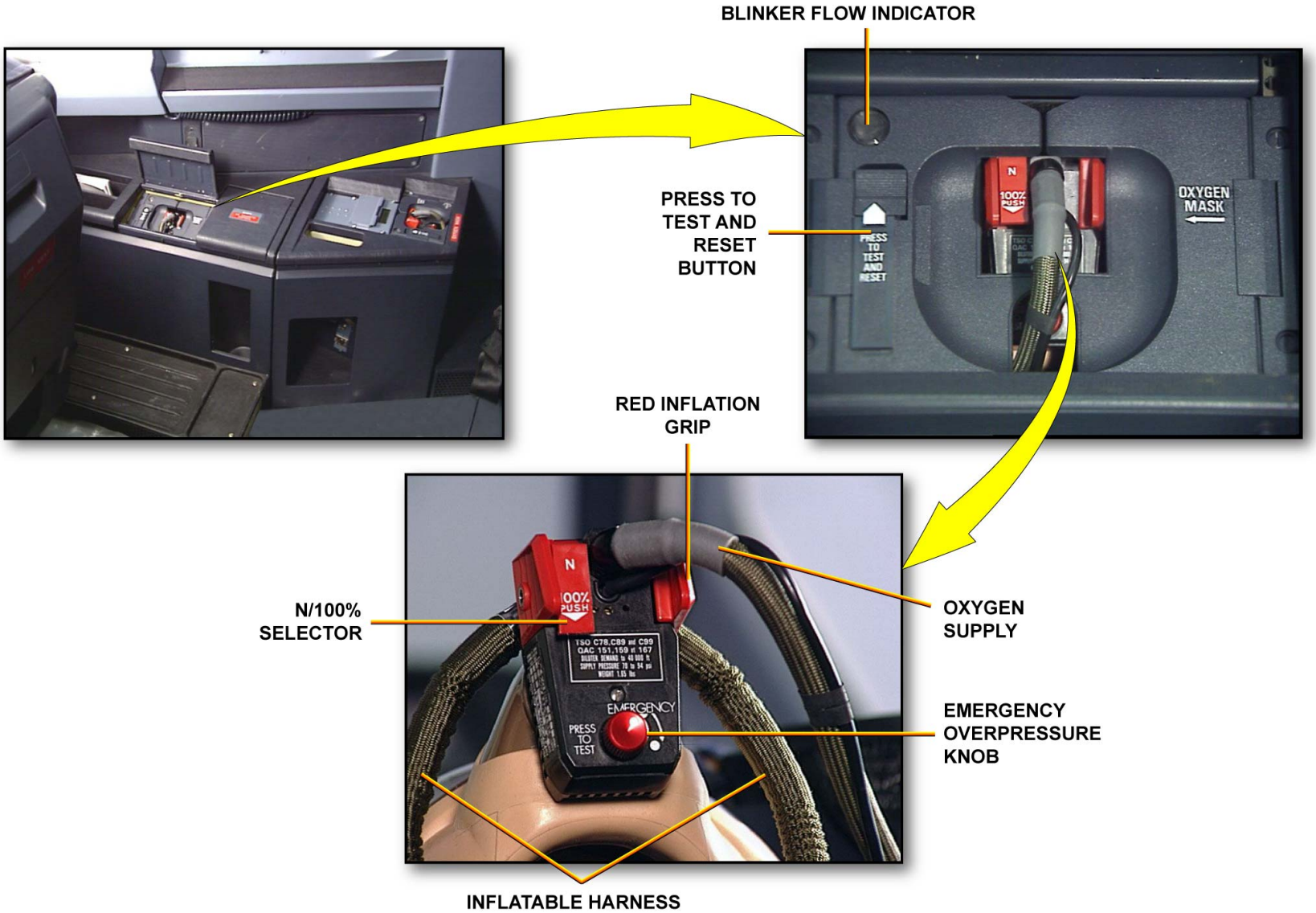

SYSTEM OVERVIEW - CREW OXYGEN MASKS

OXYGEN SYSTEM LINE MAINTENANCE BRIEFING (2)

SYSTEM OVERVIEW (continued)

PASSENGER OXYGEN SYSTEM

Oxygen masks are released automatically with a cabin depressurization and an aircraft altitude over 14.000 ft, or manually anytime in flight or on ground via the OXYGEN panel in cockpit or with a manual release tool. The passenger oxygen system supplies cabin occupants with oxygen in the case of loss of cabin pressure altitude. The container doors open electrically. When pulling the mask towards the users face, the oxygen generator is activated and supplies pure oxygen to the masks for a limited time. After operation, the system has to be reset by pushing the OXYGEN TiMeR RESET P/B on the maintenance panel in order to return the electrical activation system to normal condition. The chemical generators used to generate oxygen are installed in special containers. These containers are located above the passenger seats, in the lavatories and at the cabin attendant stations.

G7508471 - G3NT1T0 - FM35B1000000001

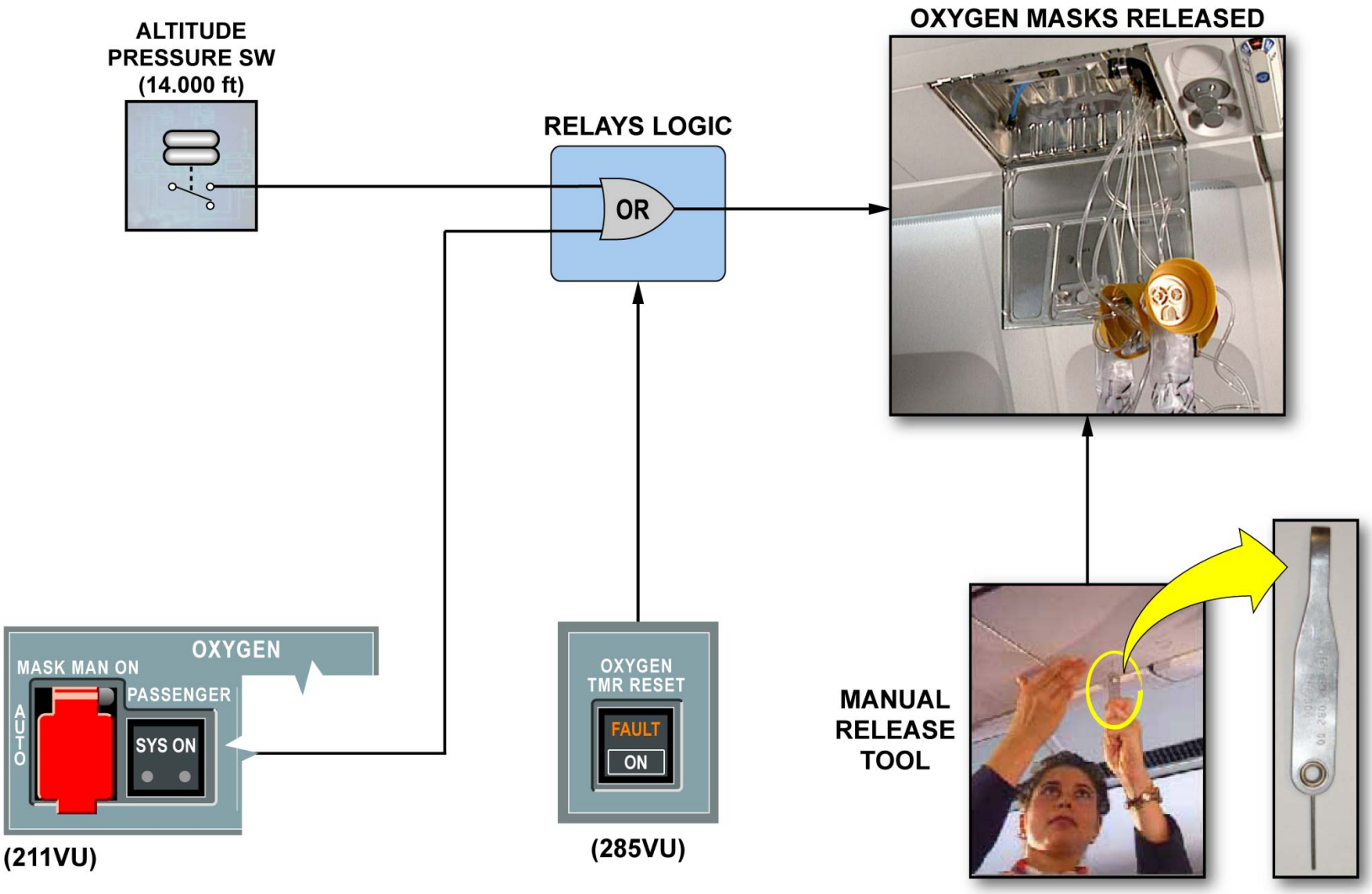

SYSTEM OVERVIEW - PASSENGER OXYGEN SYSTEM

G7508471 - G3NT1T0 - FM35B1000000001

OXYGEN SYSTEM LINE MAINTENANCE BRIEFING (2)

SYSTEM OVERVIEW (continued)

GASEOUS OXYGEN SYSTEM (OPTION)

The passenger gaseous oxygen system supplies oxygen to each oxygen container in case of an emergency.
The rate of the oxygen flow depends on the altitude, down to zero at 10.000 ft (3.050 m). HP oxygen is kept in oxygen cylinder assemblies located behind sidewall linings in the FWD cargo compartment. The standard system has 5 oxygen cylinders, plus up to 13 additional oxygen cylinders can be installed on airline request.
When the cabin pressure decreases to a pressure equivalent to 14.000 ft (4.300 m) the altitude SW closes. This starts the automatic operation of the oxygen system. The oxygen regulators open and deliver a regulated flow of oxygen to the two main supply lines. The oxygen masks container doors open pneumatically and the masks fall down. Oxygen only flows to the masks, which are pulled down.
The MASK MANual ON P/B on the OXYGEN panel can be pushed at any time to manually start the operation of the oxygen system.
After operation, the system is reseted by pushing the OXYGEN RESET P/B this brings the passenger oxygen system back to the initial configuration and the oxygen regulators will close.
The Quantity Calculation And Control Unit (QCCU) sends the temperature adjusted pressure to the ECAM DOOR/OXY page. It is also connected to the Central Maintenance Computer (CMC) for failures monitoring and system test.

G7508471 - G3NT1T0 - FM35B1000000001

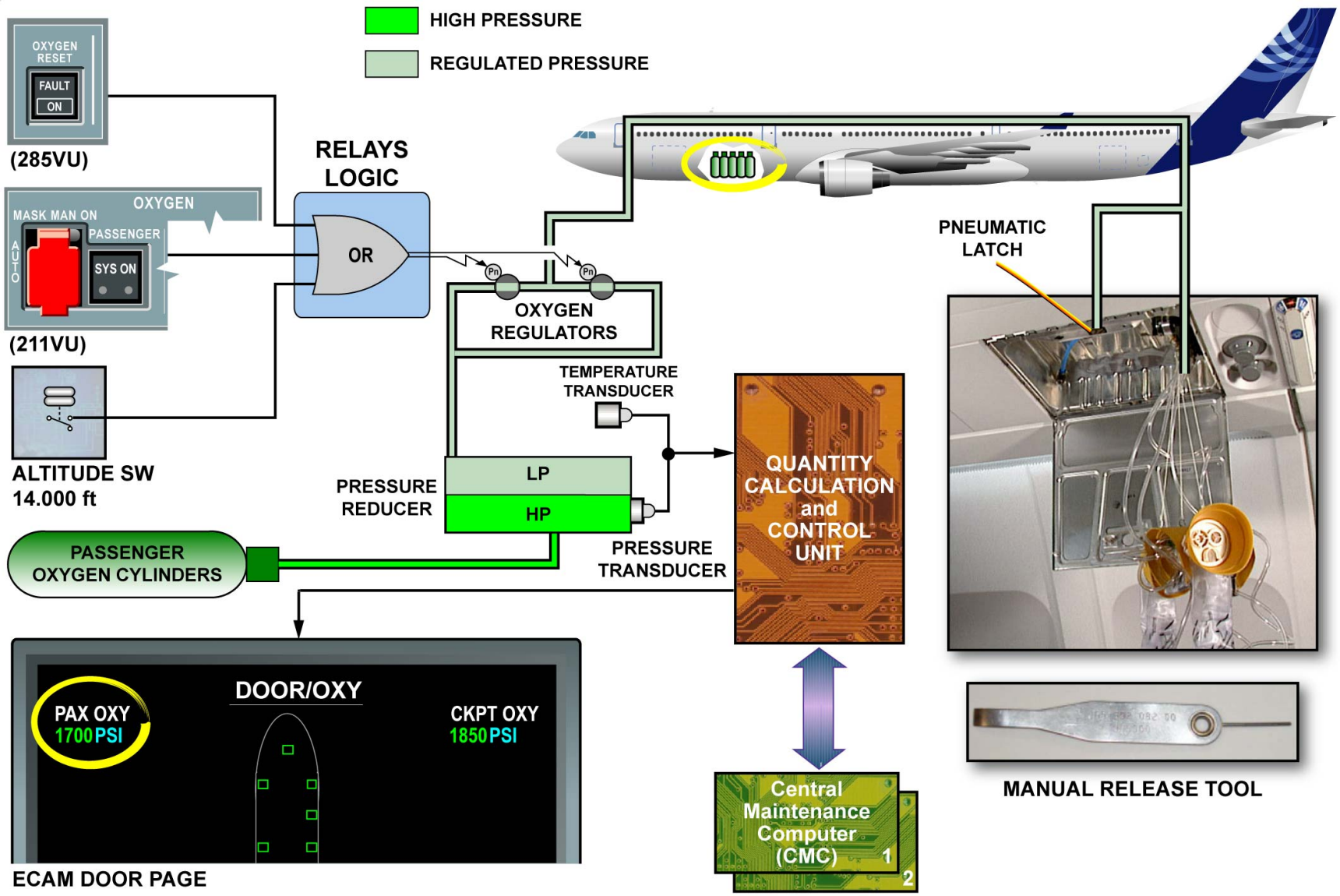

SYSTEM OVERVIEW - GASEOUS OXYGEN SYSTEM (OPTION)

G7508471 - G3NT1T0 - FM35B1000000001

OXYGEN SYSTEM LINE MAINTENANCE BRIEFING (2)

SYSTEM OVERVIEW (continued)

CREW PORTABLE OXYGEN SYSTEM

The portable oxygen system supplies oxygen to the flight crew, the cabin attendants and the passengers in case of emergency.
The flight crew portable oxygen device is a protective breathing-equipment (PBE) installed behind the pilots seat.
The cabin-attendants portable oxygen devices are of two types, the protective breathing equipments (PBE) and the high pressure oxygen cylinders with continuous flow type masks. They are installed at different locations in the cabin.
The primary use of the protective breathing equipment (PBE) is to supply oxygen to a flight crew member or a flight attendant if there is a fire, or an emission of smoke and/or noxious gas. It provides protection to the eyes and respiratory system and permits to move freely to extinguish a fire. It can also supply emergency-oxygen if the fixed emergency-oxygen system does not work. It ensures a total autonomy of 15 minutes.
The protective breathing-equipment is stored under vacuum in a specially designed sachet. The sachet is mounted inside a box in such a way that, after opening the box, the hood is removed and the vacuum protection is automatically opened with a single movement.

PROTECTIVE BREATHING EQUIPMENT

SYSTEM OVERVIEW - CREW PORTABLE OXYGEN SYSTEM

OXYGEN SYSTEM LINE MAINTENANCE BRIEFING (2)

SYSTEM OVERVIEW (continued)

PORTABLE OXYGEN SYSTEM (PASSENGERS FIRST AID)

The cabin-attendants portable oxygen devices are of two types, the protective breathing equipments (PBE) and the high pressure oxygen cylinders with continuous flow type masks. They are installed at different locations in the cabin. The high-pressure oxygen cylinders with continuous-flow type masks supply first aid oxygen for the passengers. If necessary they can also supply oxygen to the cabin attendants.

G7508471 - G3NT1T0 - FM35B1000000001

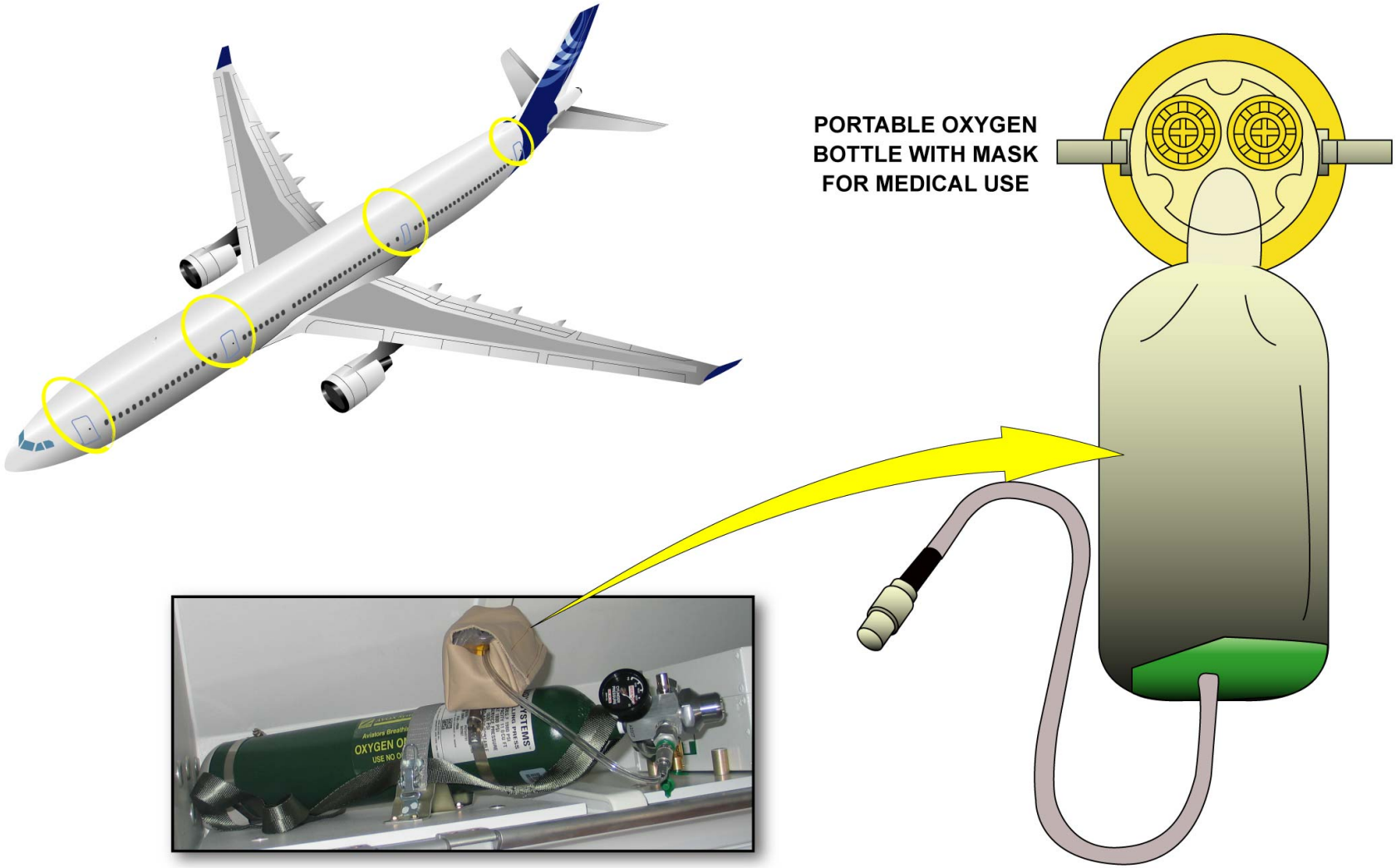

SYSTEM OVERVIEW - PORTABLE OXYGEN SYSTEM (PASSENGERS FIRST AID)

G7508471 - G3NT1T0 - FM35B1000000001

OXYGEN SYSTEM LINE MAINTENANCE BRIEFING (2)

SERVICING

CREW OXYGEN CYLINDER REMOVAL/INSTALLATION

The oxygen cylinder has to be removed in case of low contents (low pressure) or leakage and replaced by a fully charged cylinder.
Put the access platform in position and open the access door 811.
Close the oxygen cylinder ON/OFF valve.
Bleed and empty the oxygen system from the crew oxygen storage box in the cockpit.
Open, safety and tag the CREW OXY ConTroL circuit breaker 4HT on panel 742VU.
Disconnect the pressure regulator transmitter assembly from the oxygen cylinder.
Disconnect the HP safety hose from the cylinder head.
Loosen and open the straps, then remove the cylinder from the support.
Make sure that the parts kept from the removed component are clean and in the correct condition.
Check the expiration date on the cylinder to make sure that it can still be used.
Carefully put the cylinder on the support.
Close and tighten the straps.
Put a new conical seal on the union and tighten the HP safety connector on the cylinder head.
Put the regulator on the valve and tighten the nut.
Apply the special material solution to the mechanical connections.
Very slowly, open the valve of the cylinder 3.5 to 4 turns and let the pressure become stable, this occurs after approximately 90 seconds then fully open the cylinder valve.
Examine each connection to make sure that there are no leaks.
Rub off the special material solution.
Make sure that the work area is clean and clear of tools and other items.
Close the access door 811. Remove the safety clip and the tag. Close the circuit- breaker 4HT.

G7508471 - G3NT1T0 - FM35B1000000001

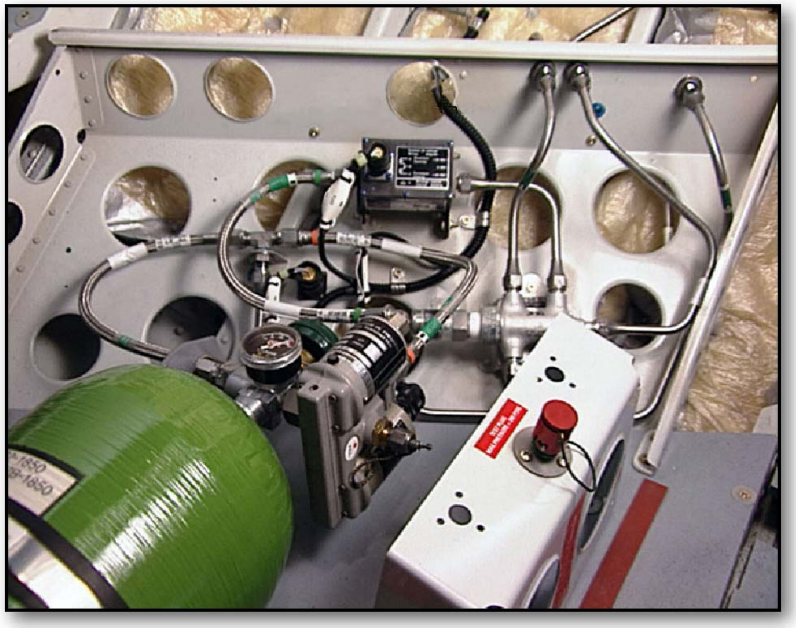

OXYGEN CYLINDER AND CONNECTIONS

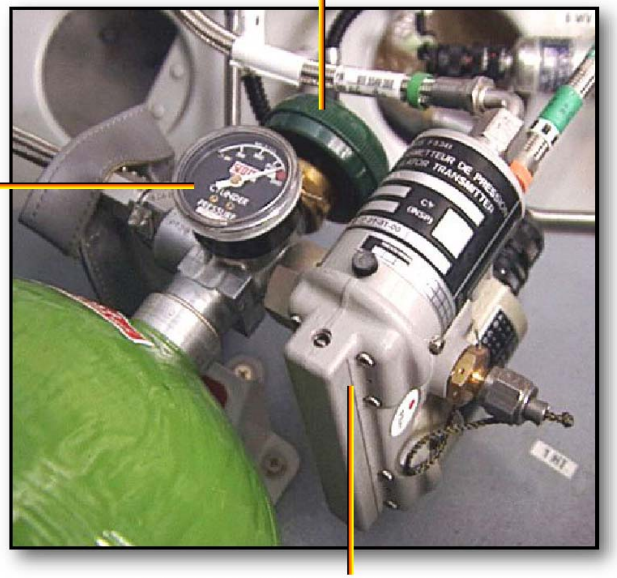

SERVICING - CREW OXYGEN CYLINDER REMOVAL/INSTALLATION

OXYGEN SYSTEM LINE MAINTENANCE BRIEFING (2)

SERVICING (continued)

SAFETY PRECAUTIONS

Keep all hydrocarbons (fuels, lubricants, etc.) away from oxygen sources. Oxygen becomes explosive when it comes in contact with hydrocarbons. Clean the tools and make sure your hands are clean to prevent contamination of the oxygen system. Put dry and clean metal or plastic plugs on all pipes or units temporarily removed. Put each pipe or unit in a sealed vinyl bag.

G7508471 - G3NT1T0 - FM35B1000000001

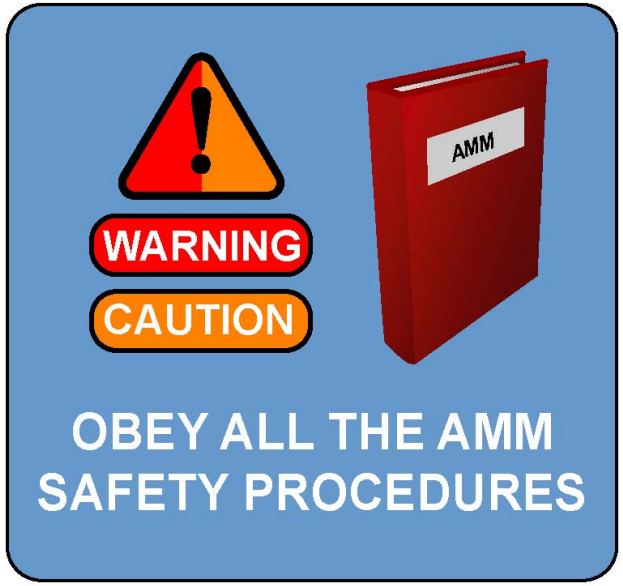

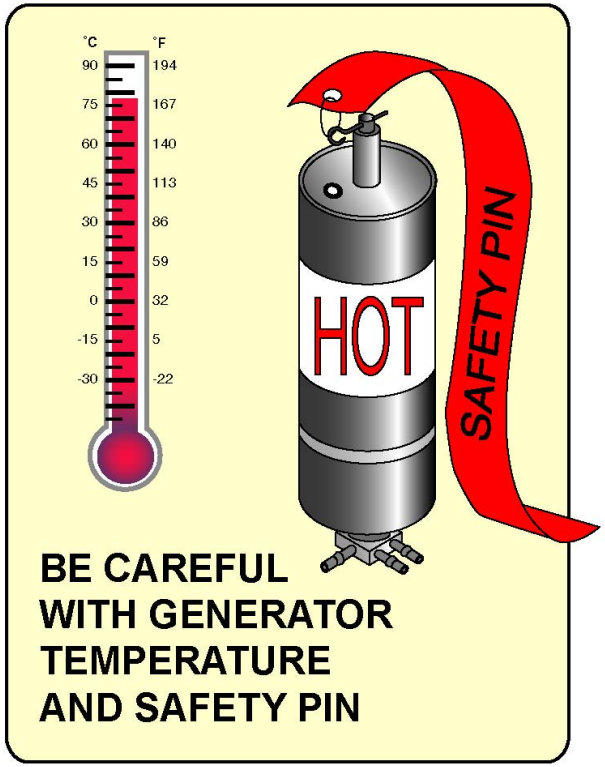

SERVICING - SAFETY PRECAUTIONS

OXYGEN SYSTEM LINE MAINTENANCE BRIEFING (2)

SERVICING (continued)

CHECK OF HP INDICATION IN THE PASSENGER OXYGEN CYLINDERS (GAZEOUS SYSTEM)

Get access to the FWD cargo compartment then to the passenger oxygen cylinders (panel 132QW) and the QCCU (access door 132AZ).
Make sure that the warning lights on the QCCU are off.
To calculate the average pressure (PA) in the oxygen cylinders:
- read and write down the pressure shown on the gage of each oxygen cylinder,
- add the pressures together and divide the result by the number of oxygen cylinders installed.

Compare the average pressure in the oxygen cylinders with the pressure (PI) shown on the fill panel indicator (980WR).

NOTE: This procedure has to be applied in case of ECAM indication malfunction.

Use the table to calculate the oxygen corrected pressure.

G7508471 - G3NT1T0 - FM35B1000000001

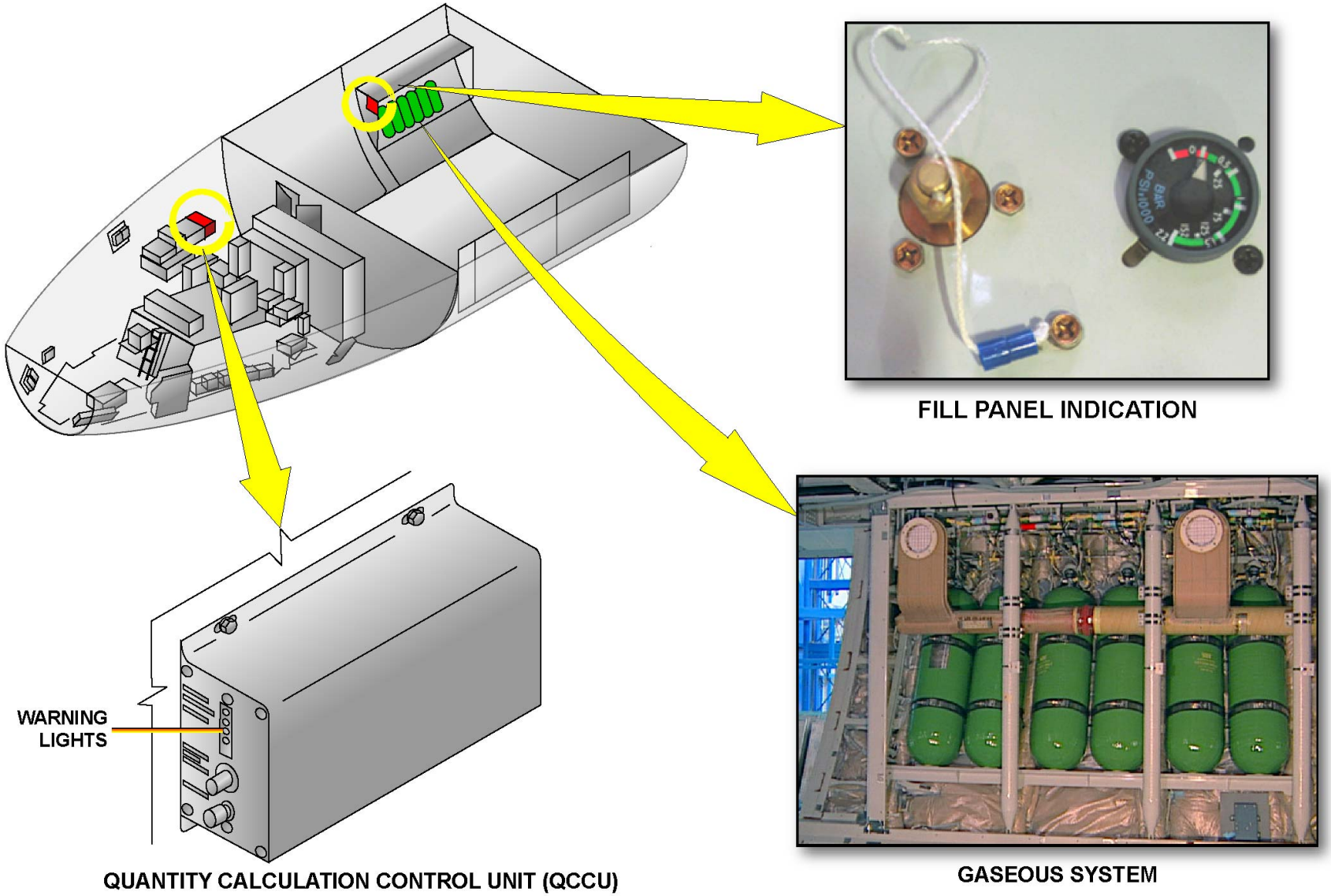

SERVICING - CHECK OF HP INDICATION IN THE PASSENGER OXYGEN CYLINDERS (GAZEOUS SYSTEM)

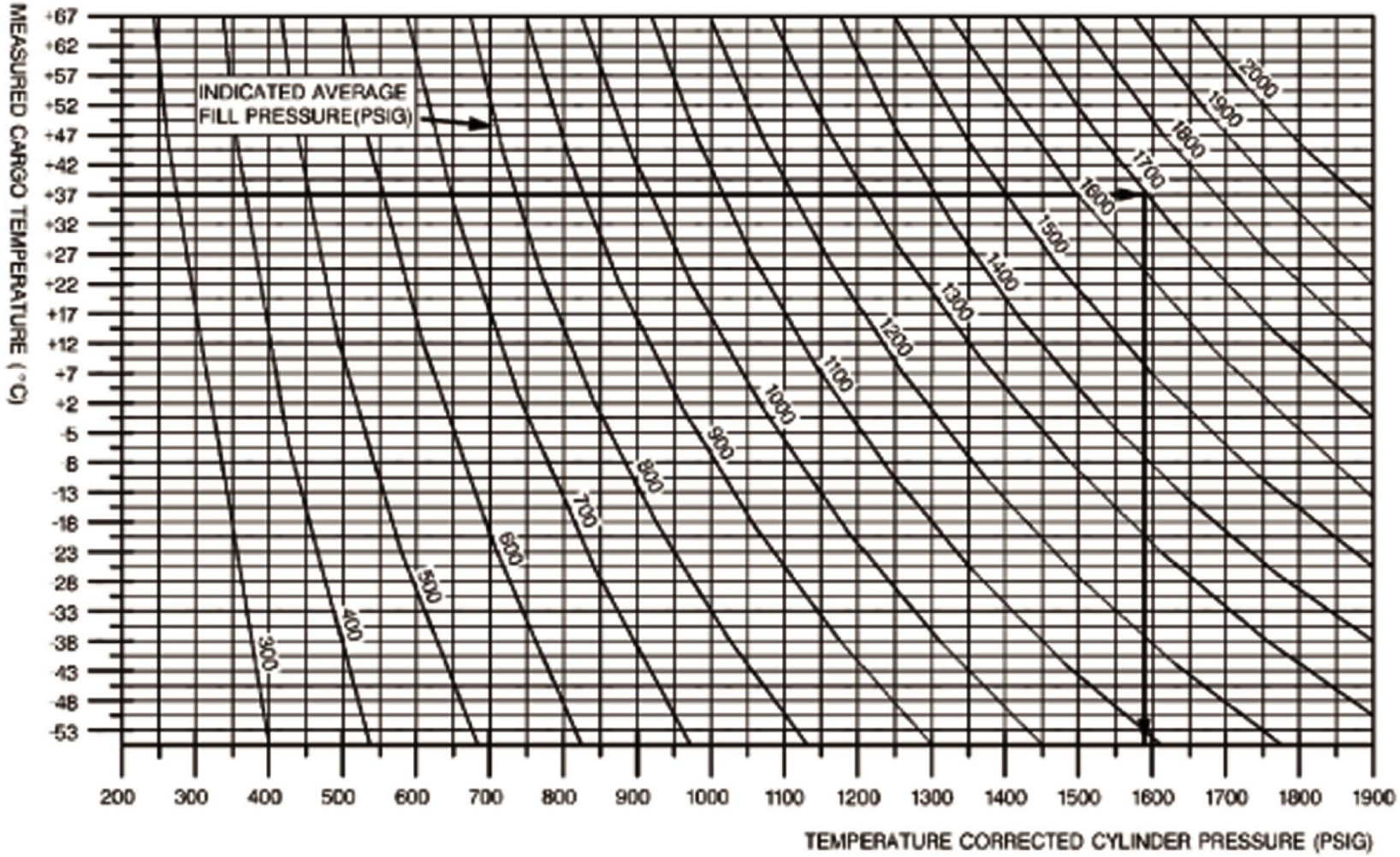

CHART OF TEMPERATURE CORRECTED PRESSURES

SERVICING - CHECK OF HP INDICATION IN THE PASSENGER OXYGEN CYLINDERS (GAZEOUS SYSTEM)

G7508471 - G3NT1T0 - FM35B1000000001

This Page Intentionally Left Blank

G7508471 - G3NT1T0 - FM35B1000000001

OXYGEN SYSTEM LINE MAINTENANCE BRIEFING (2)

DAILY CHECK

During the daily check the external walk around will include the visual check of the crew oxygen cylinder overpressure (Green) discharge disc to be sure that it is not missing. The ECAM DOOR/OXY page shows the crew oxygen pressure indication. If the pressure is less than 1.500 PSI, a half box (advisory) is shown for information. In this case, check the AMM. This is to see if the minimum oxygen pressure available to the flight crew is within the permitted limits. Refer to the Minimum Flight Crew Oxygen Pressure chart and find the minimum pressure according to the ambient temperature and the number of crew members. If the pressure is less than the minimum flight crew oxygen pressure the oxygen cylinder must be changed or refilled according to required regulations.

G7508471 - G3NT1T0 - FM35B1000000001

REF TEMPERATURE *		°C	-10	0	10	20	30	40	50
		°F	14	32	50	68	86	104	122
MIN ** BOTTLE PRESSURE (PSI)	2 CREW MEMBERS		520	540	560	580	600	620	640
	2 CREW MEMBERS	+ 1 0 BS	660	690	710	740	760	790	810
	2 CREW MEMBERS	+ 2 0 BS	810	850	880	910	940	970	1000

* REF TEMPERATURE:

- ON GROUND: $\frac{\text{OAT + CAB TEMP}}{2}$

- IN FLIGHT: CAB TEMP (°C) - 10°C
  OR CAB TEMP (°F) - 18°F

** MINIMUM BOTTLE PRESSURE TO COVER:

- PREFLIGHT CHECKS
- USAGE OF OXYGEN WHEN ONLY ONE PILOT IS IN THE COCKPIT
- UNUSABLE QUANTITY (TO ENSURE REGULATOR FUNCTIONING WITH MINIMUM PRESSURE)
- NORMAL SYSTEM LEAKAGE

AND

- PROTECTION AFTER LOSS OF CABIN PRESSURE WITH MASK REGULATOR ON NORMAL (DILUTED OXYGEN):
  - DURING EMERGENCY DESCENT FOR ALL COCKPIT MEMBERS FOR 15 MINUTES (REFER TO CABIN FIXED OXYGEN SYSTEM)
  - DURING CRUISE AT FL 100 FOR 2 CREW MEMBERS FOR 105 MINUTES.

OR

- PROTECTION AGAINST SMOKE WITH 100% OXYGEN FOR ALL COCKPIT MEMBERS DURING 15 MINUTES AT 8000 FT CABIN ALTITUDE.

NOTE: THE ABOVE TIMES WHICH ARE BASED ON THE USE OF SEALED MASK, MAY BE SHORTER FOR BEARDED CREW (IN TERMS OF PERFORMANCE, PRESSURE OR DURATION).

DAILY CHECK

G7508471 - G3NT1T0 - FM35B100000001

OXYGEN SYSTEM LINE MAINTENANCE BRIEFING (2)

WEEKLY CHECK

CHECK OF PORTABLE OXYGEN CONTENTS

Get access to the portable oxygen cylinders and check that the swivel of the pressure gage is in the red band. If the indicator of the pressure gage is not in the red band replace the oxygen cylinder by a serviceable unit.

G7508471 - G3NT1T0 - FM35B1000000001

Make sure that the indicators on the pressure gages are in the red (FULL) band.

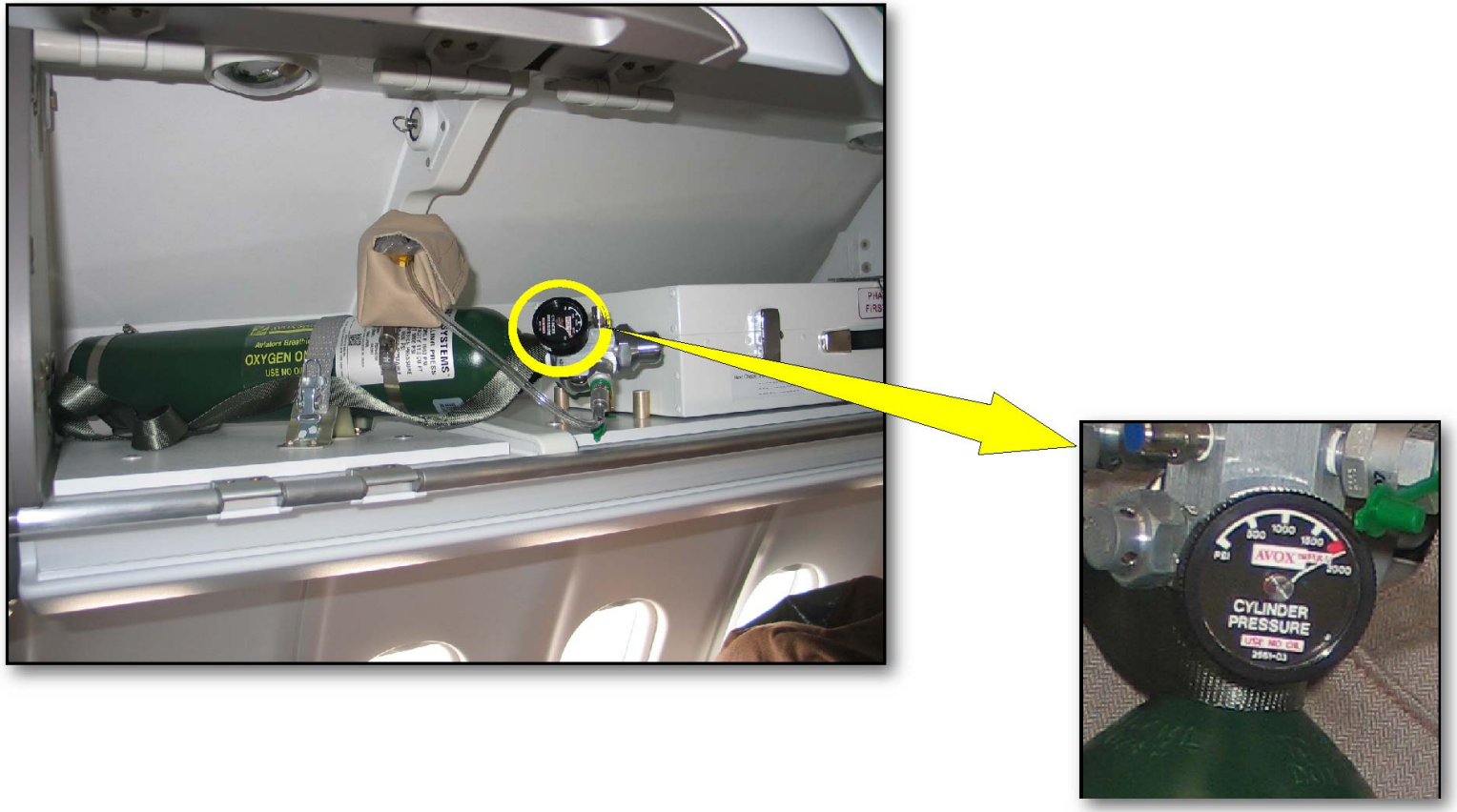

WEEKLY CHECK - CHECK OF PORTABLE OXYGEN CONTENTS

G7508471 - G3NT1T0 - FM35B1000000001

OXYGEN SYSTEM LINE MAINTENANCE BRIEFING (2)

WEEKLY CHECK (continued)

CHECK OF PBE TAMPER SEAL

The primary use of Portable Breathing Equipment (PBE) is to supply oxygen to the cabin attendants and flight crew if there is a fire, emission of smoke or noxious gas. Check that the tamper seal, and the serviceability indicator are not broken and carry out a visual inspection of the humidity indicator on each PBE container. If a tamper seal or a serviceability indicator is broken, replace the PBE by a serviceable unit.

WARNING: THE OPERATIONAL COLOR OF THE HUMIDITY INDICATOR MUST BE GREEN.

G7508471 - G3NT1T0 - FM35B1000000001

Make sure that the seal and the serviceability indicator are not broken.

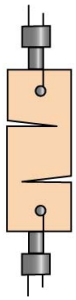

SERVICEABLE UNIT

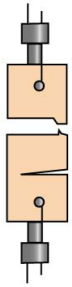

UNSERVICEABLE UNIT

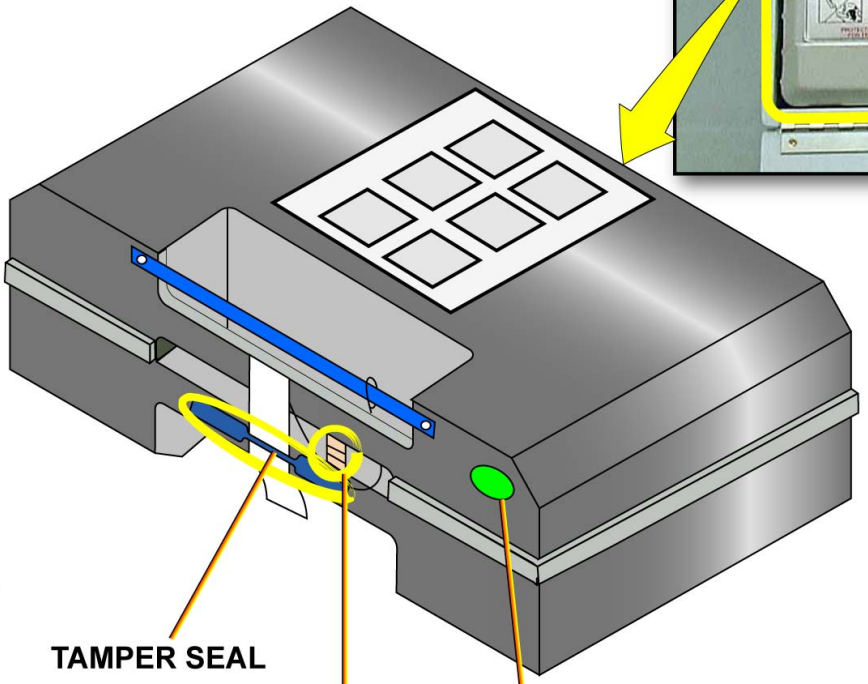

WARNING

THE OPERATIONAL COLOR OF THE HUMIDITY INDICATOR MUST BE GREEN.

WEEKLY CHECK - CHECK OF PBE TAMPER SEAL

G7508471 - G3NT1T0 - FM35B1000000001

OXYGEN SYSTEM LINE MAINTENANCE BRIEFING (2)

MEL/DEACTIVATION

CREW OXYGEN SYSTEM

A quick donning cockpit oxygen mask must be operative for each cockpit occupant. If the oxygen cylinder pressure is not displayed on the ECAM, the pressure can be read from the direct reading gage on the cylinder before each flight. The exterior oxygen overpressure indicator green disk may be missing or damaged but must be reinstalled within 10 days. One microphone must be operative for each pilot.

G7508471 - G3NT1T0 - FM35B1000000001

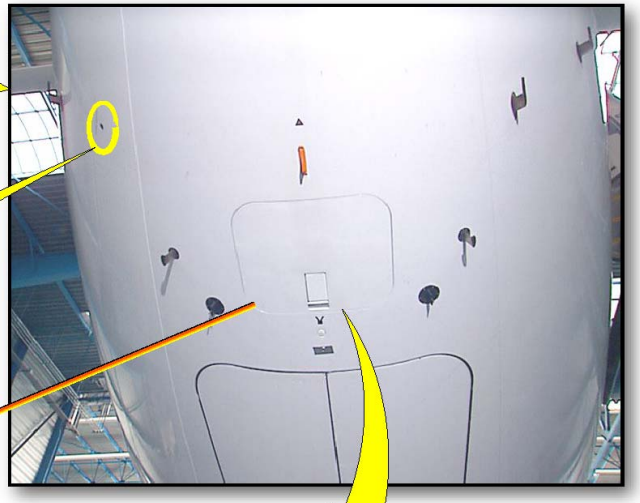

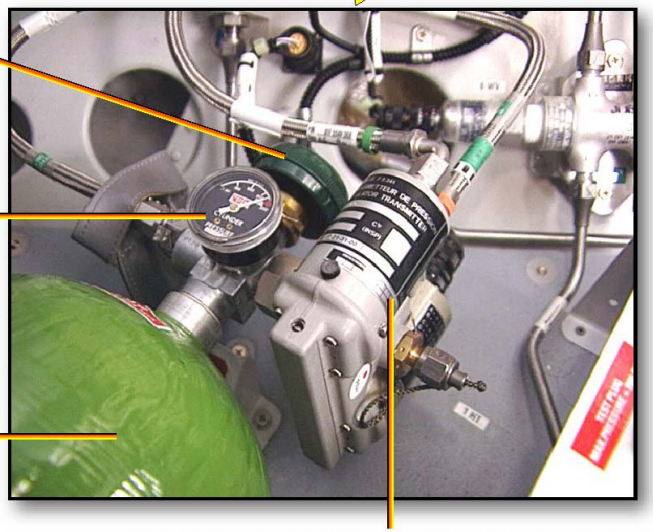

A330 taken as exemple.
Identical for all A340.

MEL/DEACTIVATION - CREW OXYGEN SYSTEM

OXYGEN SYSTEM LINE MAINTENANCE BRIEFING (2)

MEL/DEACTIVATION (continued)

PASSENGER OXYGEN SYSTEM

One or more Individual Oxygen Module in the Flight Crew Rest Compartment (FCRC) or in the Lower Deck Crew Rest Compartment (LDCRC) may be inoperative:
- the related bunk bed or seat is not occupied and is placarded inoperative or the related bunk bed or seat may be occupied,
- if the operating altitude is limited according to regulations or the related bunk bed or seat may be occupied,
- if a portable oxygen bottle and mask are available for the related bunk bed or seat occupant.

One or more cabin individual oxygen unit may be inoperative if the related seats are not occupied or the operating altitude is limited according to regulations. One or more lavatory oxygen units may be inoperative if the related lavatory is not used/occupied.
One or more galley oxygen units may be inoperative if the related galley is not used/occupied or operating altitude is limited according to regulations or a cabin attendant portable oxygen device is available.
The passenger oxygen manual control MASK MAN ON P/B may be inoperative if the operating altitude is limited according to regulations.
The passenger oxygen AUTO control may be inoperative if the operating altitude is limited to Flight Level (FL) 300.

G7508471 - G3NT1T0 - FM35B1000000001

BUNKS AND SEAT LOWER DECK CREW REST

CHEMICAL GENERATOR

FLIGHT CREW REST COMPARTMENT

ABOVE PASSENGER SEAT

IN THE LAVATORIES

AT THE CABIN ATTENDANT STATIONS

MEL/DEACTIVATION - PASSENGER OXYGEN SYSTEM

OXYGEN SYSTEM LINE MAINTENANCE BRIEFING (2)

MEL/DEACTIVATION (continued)

PORTABLE OXYGEN SYSTEM

Some of the flight crew and cabin attendants portable devices may be inoperative according to regulations requirements.

G7508471 - G3NT1T0 - FM35B1000000001

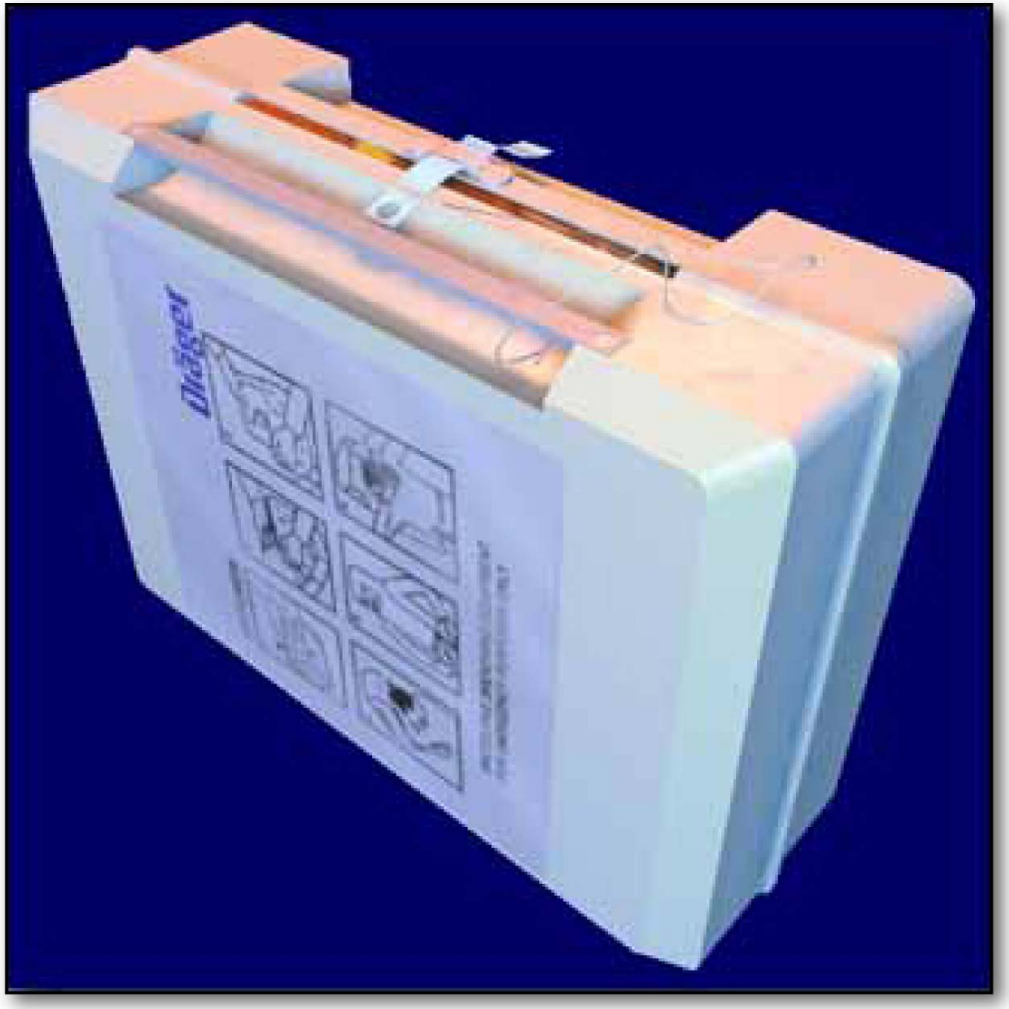

PROTECTIVE BREATHING EQUIPMENT (PBE)

MEL/DEACTIVATION - PORTABLE OXYGEN SYSTEM

OXYGEN SYSTEM LINE MAINTENANCE BRIEFING (2)

MAINTENANCE TIPS

VISUAL CHECK OF CHEMICAL OXYGEN GENERATOR FOR SIGNS OF DISCHARGE

Make sure that the condition is white. If the condition is black, replace the chemical generator.

G7508471 - G3NT1T0 - FM35B1000000001

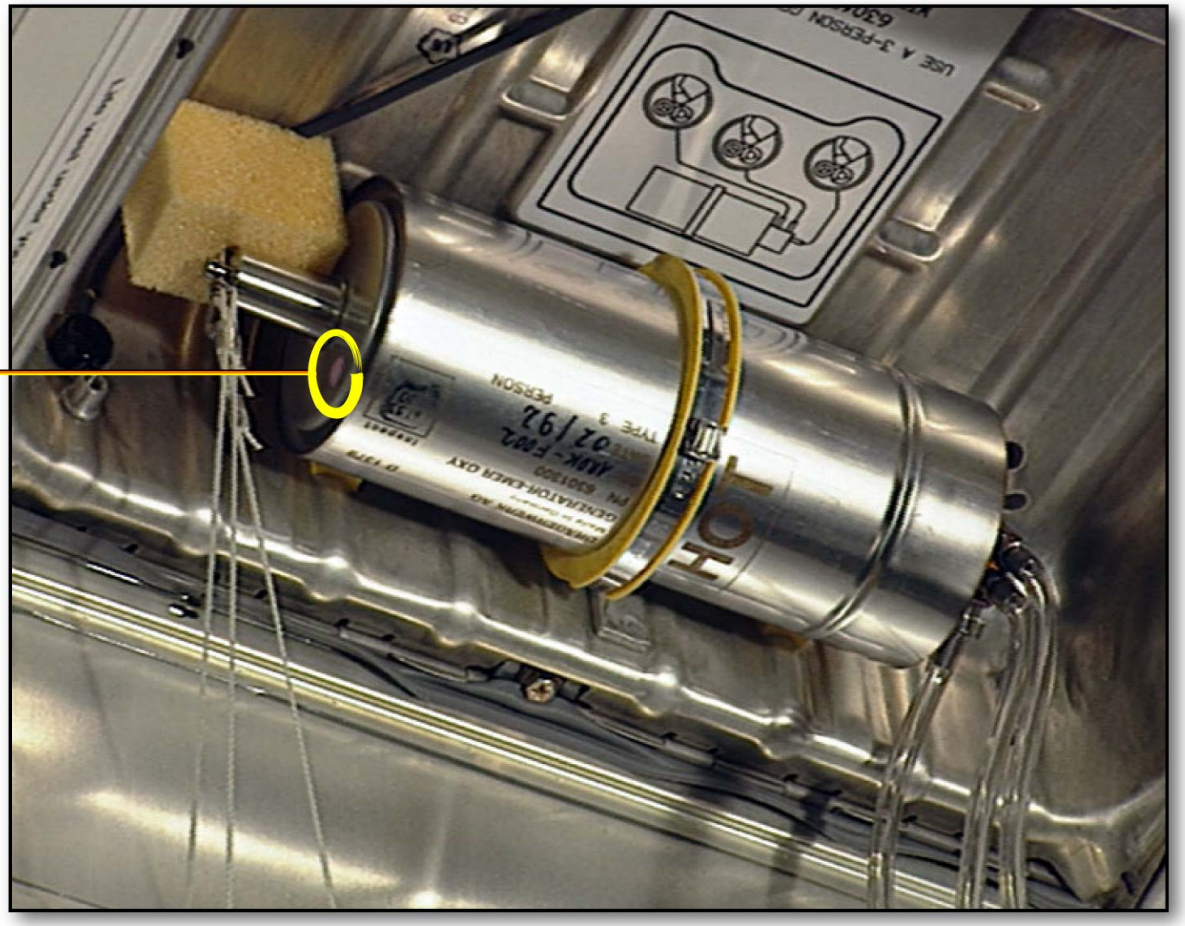

CHEMICAL GENERATOR

MAINTENANCE TIPS - VISUAL CHECK OF CHEMICAL OXYGEN GENERATOR FOR SIGNS OF DISCHARGE

G7508471 - G3NT1T0 - FM35B1000000001

OXYGEN SYSTEM LINE MAINTENANCE BRIEFING (2)

MAINTENANCE TIPS (continued)

CREW OXYGEN MASK STOWING

Proper stowing of the mask is essential for quick and efficient donning of the mask.
Open the stowage box flap doors and install the flexible hose correctly.
Engage the mask assembly with the regulator on top.
Close the left flap door carefully while pushing the reset test slider to retract the OXY ON flag.
At the end of the re-stowing operation, do the in situ test.
Push the PRESS TO TEST AND RESET button, the blinker turns yellow and goes back to black again showing that the regulator is leak tight.
Press the harness inflation control, the blinker turns yellow and goes back to black again showing that the harness is leak tight.
The emergency rotation knob is pressed for the test of the on demand system.
The microphone is tested by activating the loudspeakers, the interphone, and by pressing the emergency rotation knob.
When the tests are completed, make sure that the N/100% selector is locked in the 100% position, and the PRESS TO TEST AND RESET button returns to the up position.

G7508471 - G3NT1T0 - FM35B1000000001

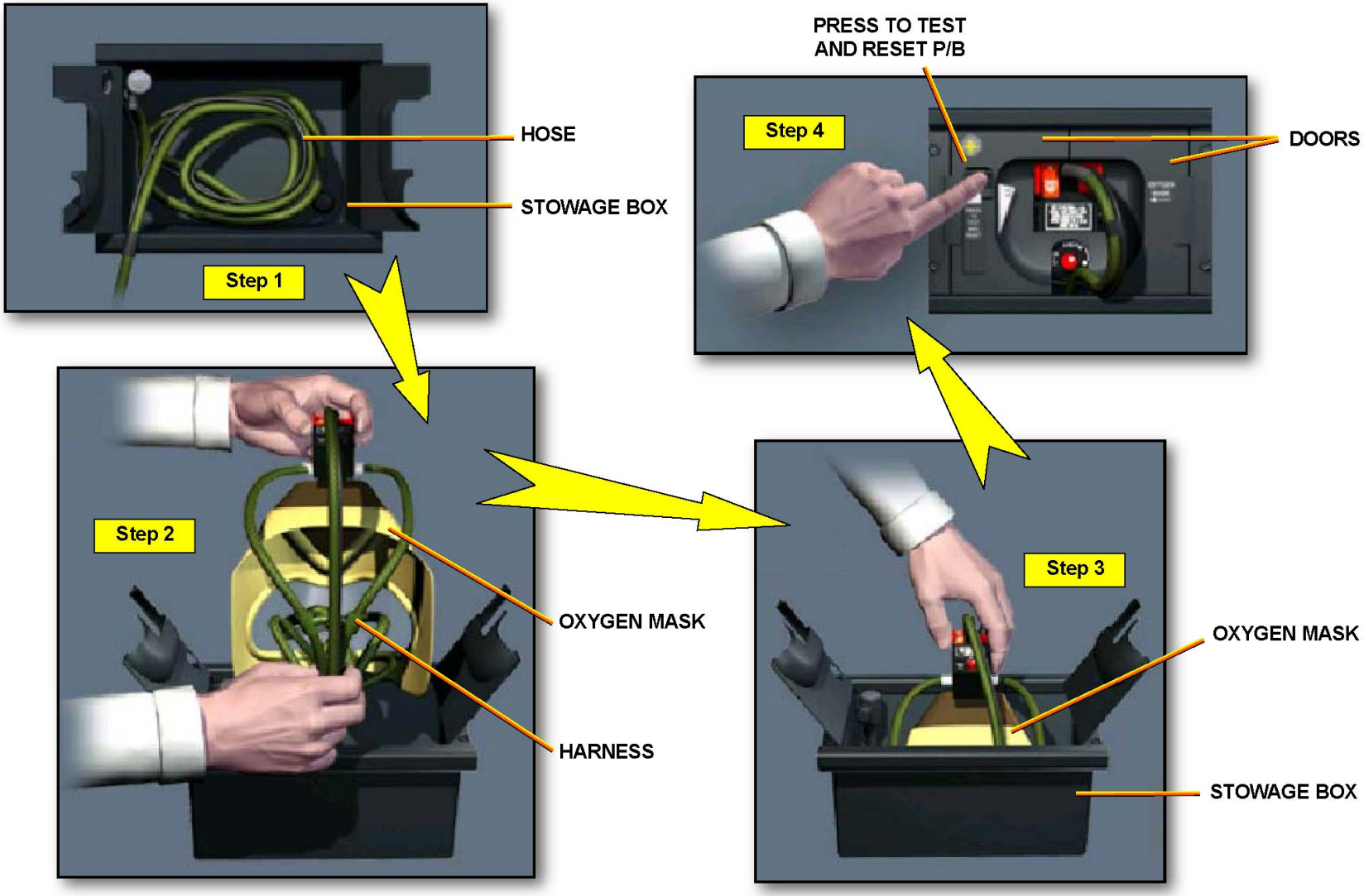

MAINTENANCE TIPS - CREW OXYGEN MASK STOWING

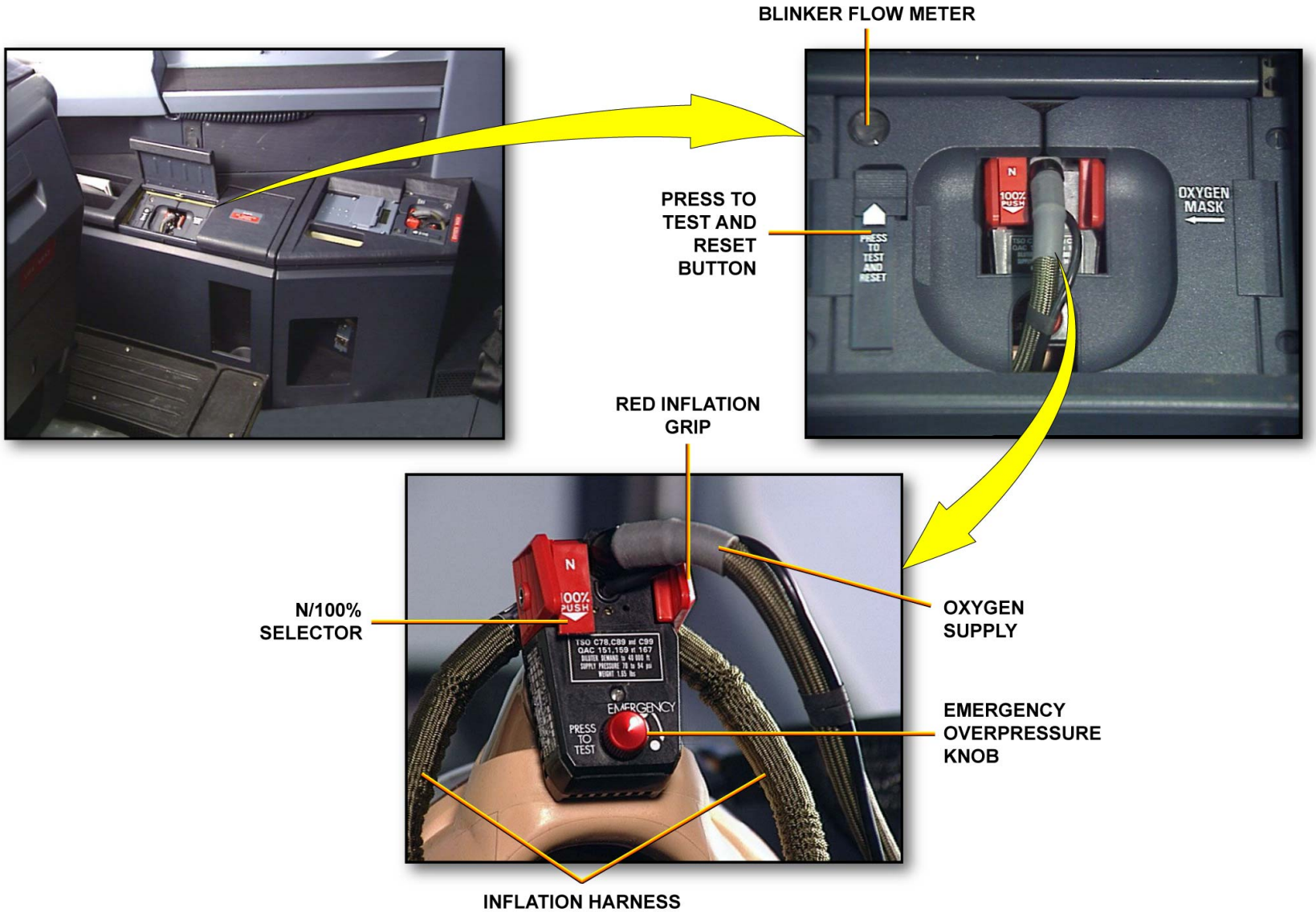

MAINTENANCE TIPS - CREW OXYGEN MASK STOWING

This Page Intentionally Left Blank

G7508471 - G3NT1T0 - FM35B1000000001

OXYGEN SYSTEM LINE MAINTENANCE BRIEFING (2)

MAINTENANCE TIPS (continued)

REPLACEMENT OF THE OVERBOARD DISCHARGE INDICATOR

Before to install a new overboard discharge indicator, on the aircraft skin remove the yellow reflecting washer from the body of the indicator and discard it and clean the body of the indicator with a clean lint-free cloth. The new components of the overboard discharge indicator are provided in a replacement kit. Install the components as shown on the picture:
- washer,
- new disc with the green reflecting surface on the external side,
- clip with the rounded edges on the external side.

NOTE: NOTE: Incorrect clip installation may lead to overboard discharge indicator falling down at aircraft touch down.

CAUTION: MAKE SURE THAT NO UNWANTED PARTICLES GO INTO THE OXYGEN SYSTEM. PARTICLES IN THE OXYGEN SYSTEM CAN CAUSE A BLOCKAGE AND DAMAGE TO THE AIRCRAFT.

G7508471 - G3NT1T0 - FM35B1000000001

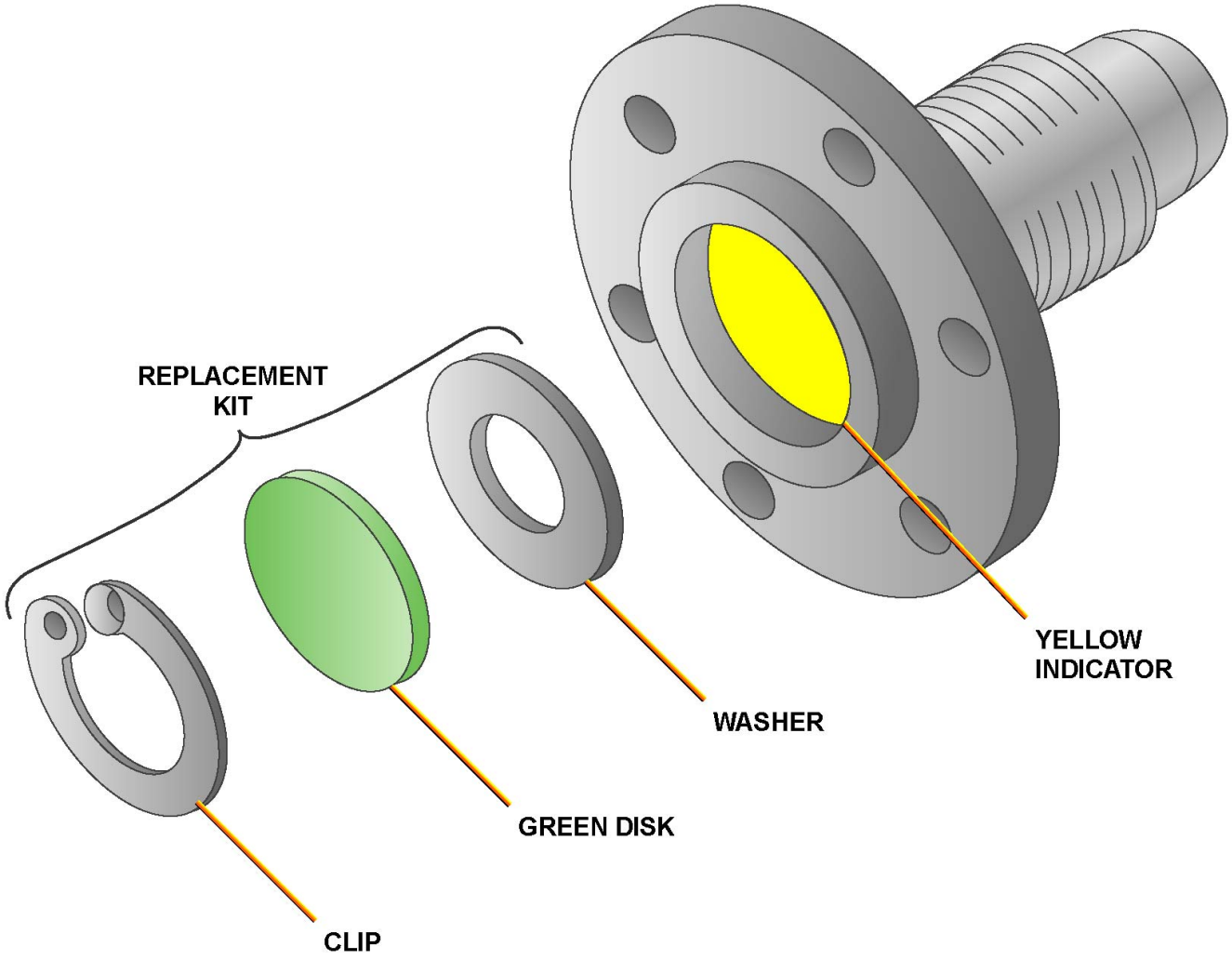

MAINTENANCE TIPS - REPLACEMENT OF THE OVERBOARD DISCHARGE INDICATOR

G7508471 - G3NT1T0 - FM35B1000000001

OXYGEN SYSTEM LINE MAINTENANCE BRIEFING (2)

MAINTENANCE TIPS (continued)

PACKING OF THE OXYGEN MASK ASSEMBLIES

WARNING: CLEAN THE TOOLS AND MAKE SURE YOUR HANDS ARE CLEAN TO PREVENT CONTAMINATION OF THE OXYGEN SYSTEM. MAKE SURE THAT THE OXYGEN MASKS ARE PACKED CORRECTLY. IF NOT, IT IS POSSIBLE THAT THEY WILL NOT FALL OUT CORRECTLY IN AN EMERGENCY SITUATION.

Fold the reservoir bag in three and put it with the headband in the oxygen mask.

Wind the supply hose and place it into the oxygen mask. Make sure that the supply hose is not twisted.

Continue to wind the hose into the oxygen mask, lifting the mask into the emergency-oxygen container.

Make sure that the supply hoses are connected to the generator outlet and that the lanyards are connected to the actuator pin.

Put the lanyards inside the oxygen masks, making sure that they do not tangle up or any part gets caught in the container.

If no other oxygen system servicing tasks have to be completed, the emergency-oxygen container can be closed, making sure that all tools used during this procedure have been removed.

G7508471 - G3NT1T0 - FM35B1000000001

Do the packing of the oxygen mask as follows:
(1)Fold the reservoir bag in three.
(2)Put the headband into the oxygen mask.
(3)Put the reservoir bag into the oxygen mask.

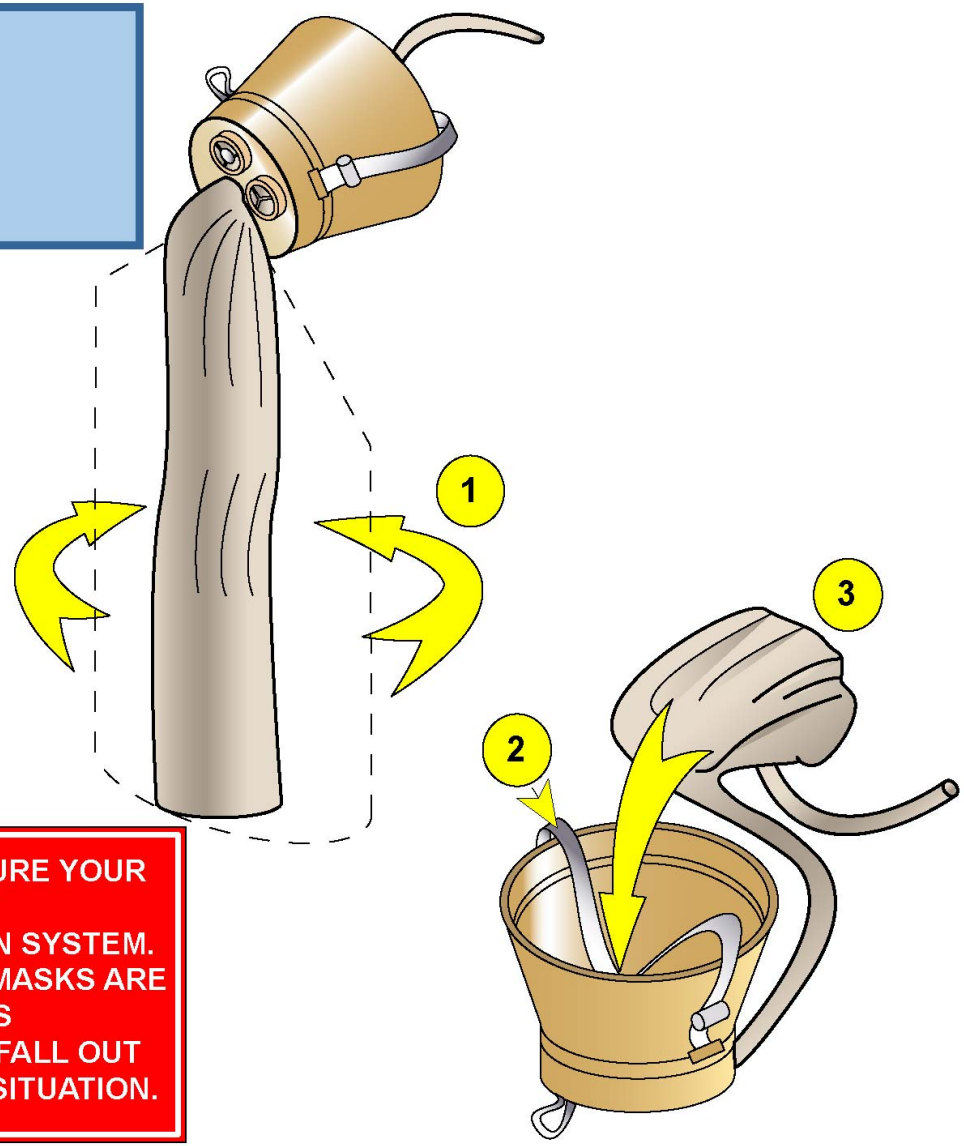

WARNING

CLEAN THE TOOLS AND MAKE SURE YOUR HANDS ARE CLEAN TO PREVENT CONTAMINATION OF THE OXYGEN SYSTEM. MAKE SURE THAT THE OXYGEN MASKS ARE PACKED CORRECTLY. IF NOT, IT IS POSSIBLE THAT THEY WILL NOT FALL OUT CORRECTLY IN AN EMERGENCY SITUATION.

MAINTENANCE TIPS - PACKING OF THE OXYGEN MASK ASSEMBLIES

(4)Wind the supply hose and make sure that it is not twisted.
(5)Put the supply hose into the oxygen mask.

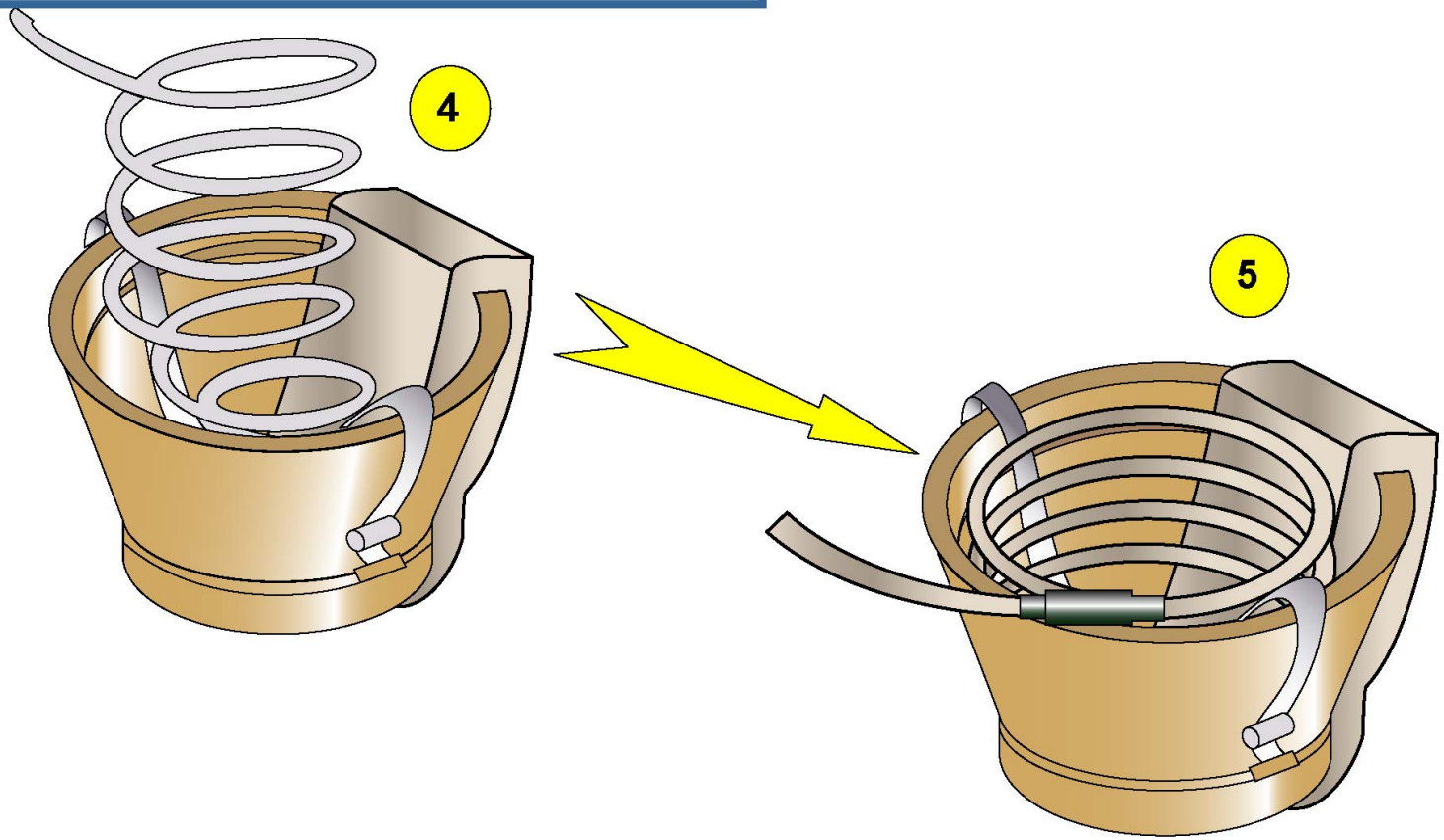

MAINTENANCE TIPS - PACKING OF THE OXYGEN MASK ASSEMBLIES

(6)Put the oxygen mask into the emergency-oxygen container as shown on the instruction label in the emergency-oxygen container.
(7)Do the procedure for the other oxygen masks.
(8)Make sure that supply hoses are connected to the generator outlet and that the lanyards are connected to the actuator pin.

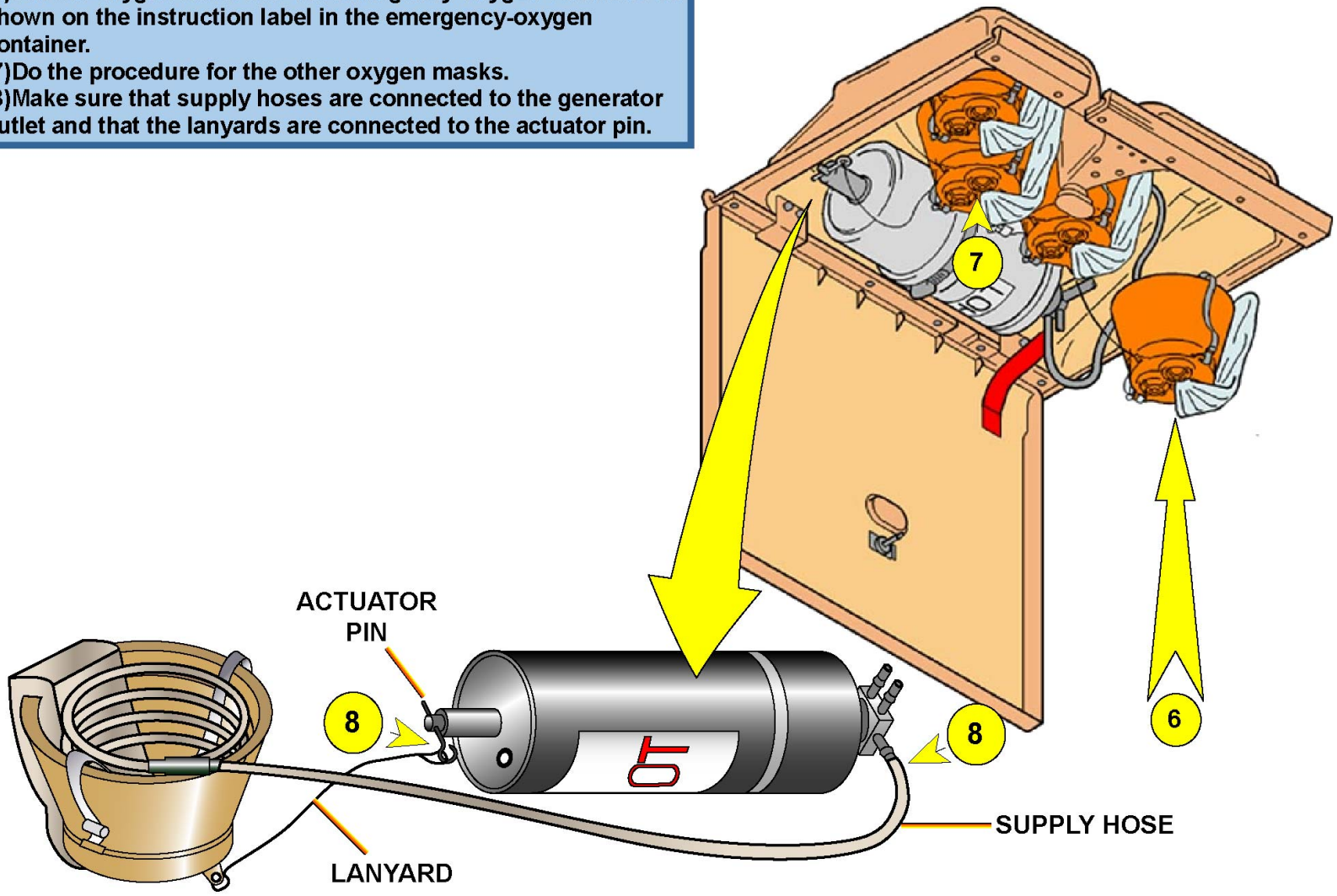

MAINTENANCE TIPS - PACKING OF THE OXYGEN MASK ASSEMBLIES

G7508471 - G3NT1T0 - FM35B1000000001

(9)Put the supply hoses on the oxygen masks. Make sure that the supply hoses do not tangle up or any part gets caught in the emergency- oxygen container.
(10)Put the lanyards on the oxygen masks. Make sure that the supply hoses do not tangle up or any part gets caught in the emergency- oxygen container.

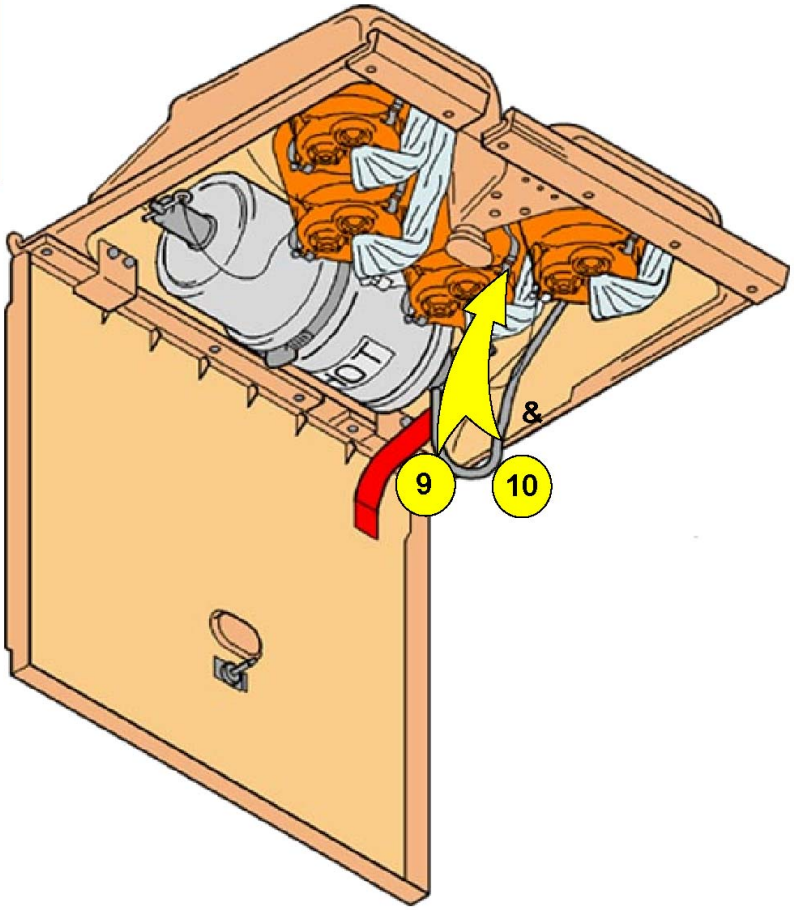

MAINTENANCE TIPS - PACKING OF THE OXYGEN MASK ASSEMBLIES

Close the door of the emergency-oxygen container

MAINTENANCE TIPS - PACKING OF THE OXYGEN MASK ASSEMBLIES

FLIGHT CREW OXYGEN SYSTEM D/O (3)

STOWAGE BOX LOCATION

The stowage box assemblies are installed in the cockpit next to each flight crew station. Each stowage box assembly contains one full-face quick donning mask.

G7508471 - G3NT1T0 - FM35D1F35A40102

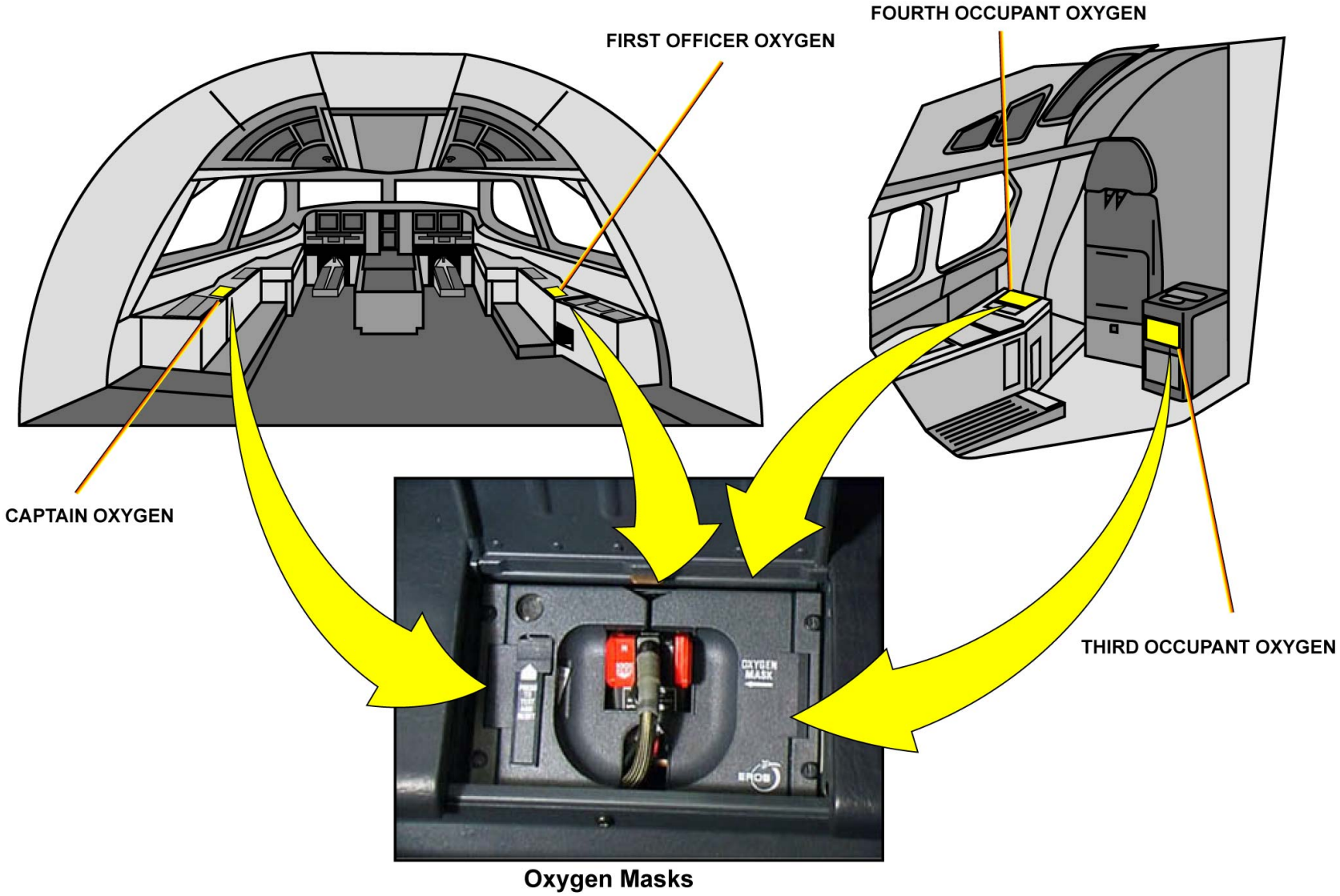

STOWAGE BOX LOCATION

G7508471 - G3NT1T0 - FM35D1F35A40102

FLIGHT CREW OXYGEN SYSTEM D/O (3)

STOWAGE BOX DESCRIPTION

Each stowage box is the connection point for the full-face quick donning mask which is kept in the box until required for use.
Each stowage box includes:
- a pneumatic supply valve,
- a two-flap door with a test and reset button incorporated in one of both flaps,
- a quick-disconnect coupling to supply the mask,
- a microphone connector.

G7508471 - G3NT1T0 - FM35D1F35A40102

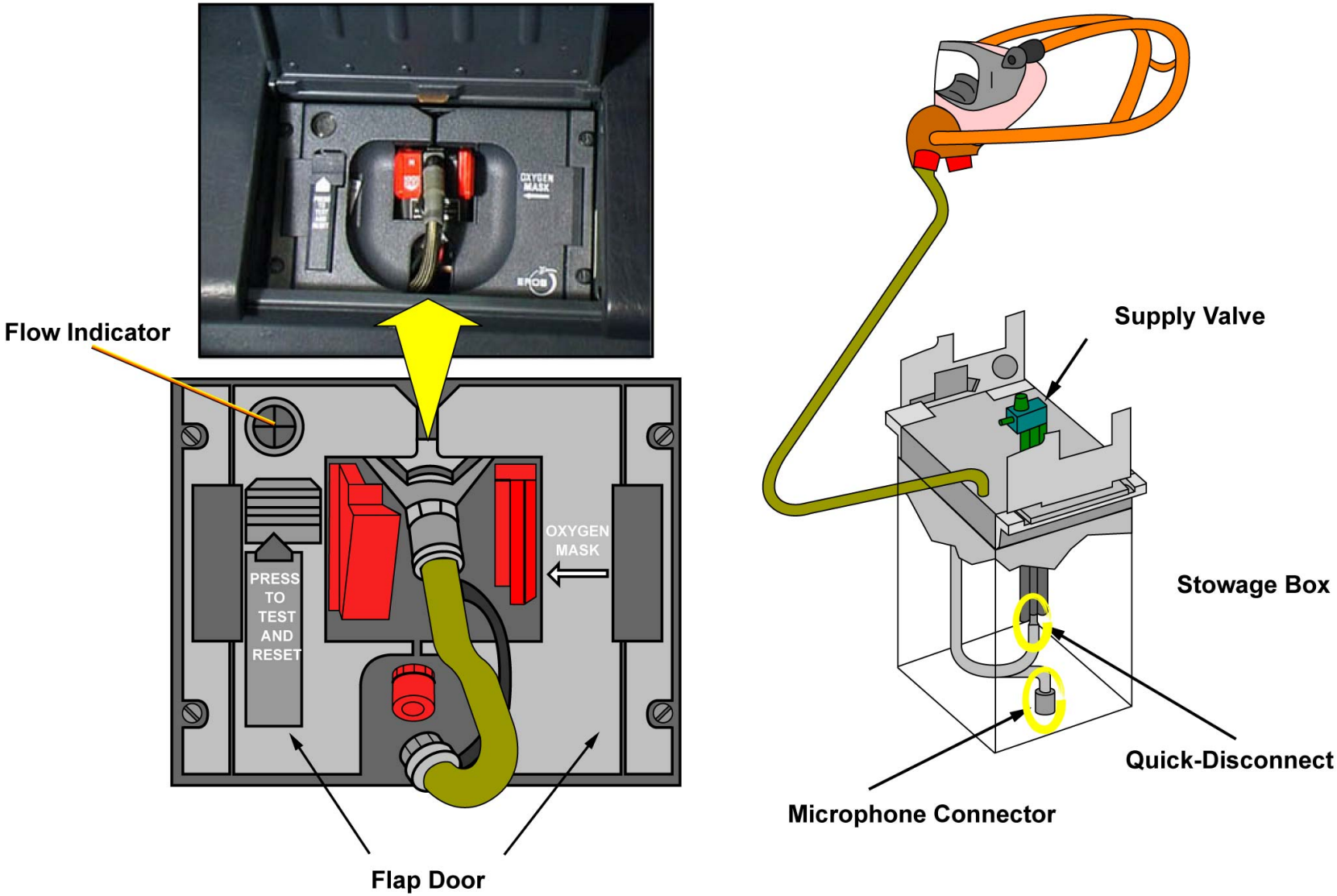

STOWAGE BOX DESCRIPTION

G7508471 - G3NT1T0 - FM35D1F35A40102

FLIGHT CREW OXYGEN SYSTEM D/O (3)

STOWAGE BOX/ SUPPLY VALVE OPERATION

When the left flap door is closed, the piston valve shuts off the mask oxygen supply.
When the mask is pulled out for use, the opening of the left flap door releases the piston valve which opens under supply pressure.
When the mask is in use, the flow indicator blinker operates under the differential pressure created by the restrictor. Then, the first closing of the left flap door triggers the OXYGEN ON flag. After re-stowing the mask and closing the two-flap door, the test and reset button must be pushed, then the OXYGEN ON flag disappears.
For test purposes, the test and reset button pressed on, releases the piston valve and allows the mask in situ test to be performed.

MASK STOWED

When the mask is stowed with the storage box doors closed, the slider/flag installed on the left door maintains the piston valve closed under the spring force. Oxygen supply of the mask is shut-off. The mask microphone is not active (proximity switch open).

G7508471 - G3NT1T0 - FM35D1F35A40102

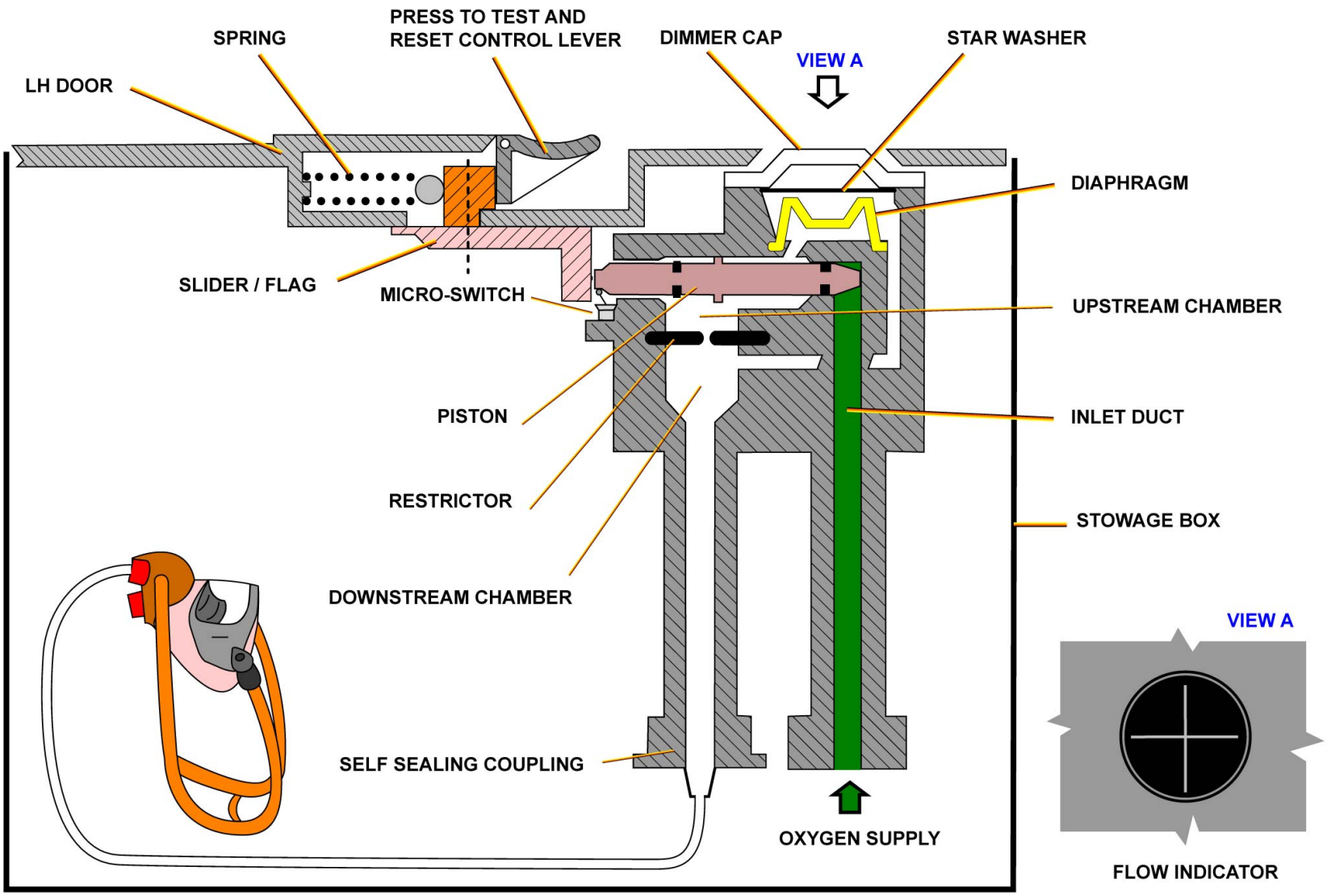

STOWAGE BOX/ SUPPLY VALVE OPERATION - MASK STOWED

G7508471 - G3NT1T0 - FM35D1F35A40102

FLIGHT CREW OXYGEN SYSTEM D/O (3)

STOWAGE BOX/ SUPPLY VALVE OPERATION (continued)

MASK IN USE

When the mask is pulled out from the stowage box for use the opening of the left flap door releases the piston valve which opens under the oxygen supply pressure. Oxygen is then supplied to the mask and the microphone is getting activated by the closure of the proximity switch. When the mask is in use (with oxygen flowing through the mask), the flow indicator operates (it turns yellow) under the differential pressure created by the restrictor.

G7508471 - G3NT1T0 - FM35D1F35A40102

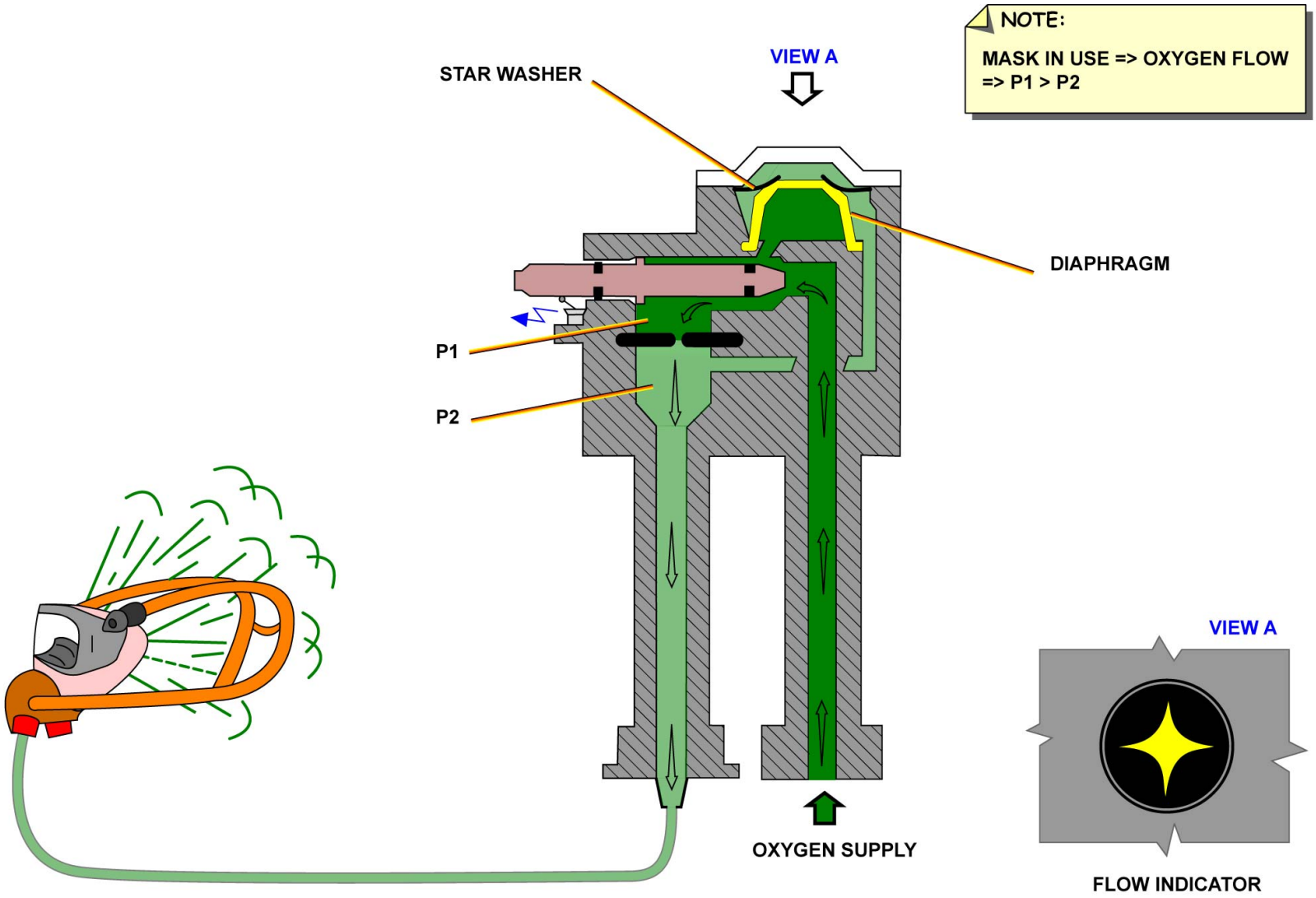

STOWAGE BOX/ SUPPLY VALVE OPERATION - MASK IN USE

G7508471 - G3NT1T0 - FM35D1F35A40102

FLIGHT CREW OXYGEN SYSTEM D/O (3)

STOWAGE BOX/ SUPPLY VALVE OPERATION (continued)

MASK STOWED AFTER USE

After usage the mask is stowed and the stowage box doors are closed. Closing the left doors triggers the "OXY ON" flag. The piston valve remains open; the flexible hose remains pressurized; the microphone remains active.

G7508471 - G3NT1T0 - FM35D1F35A40102

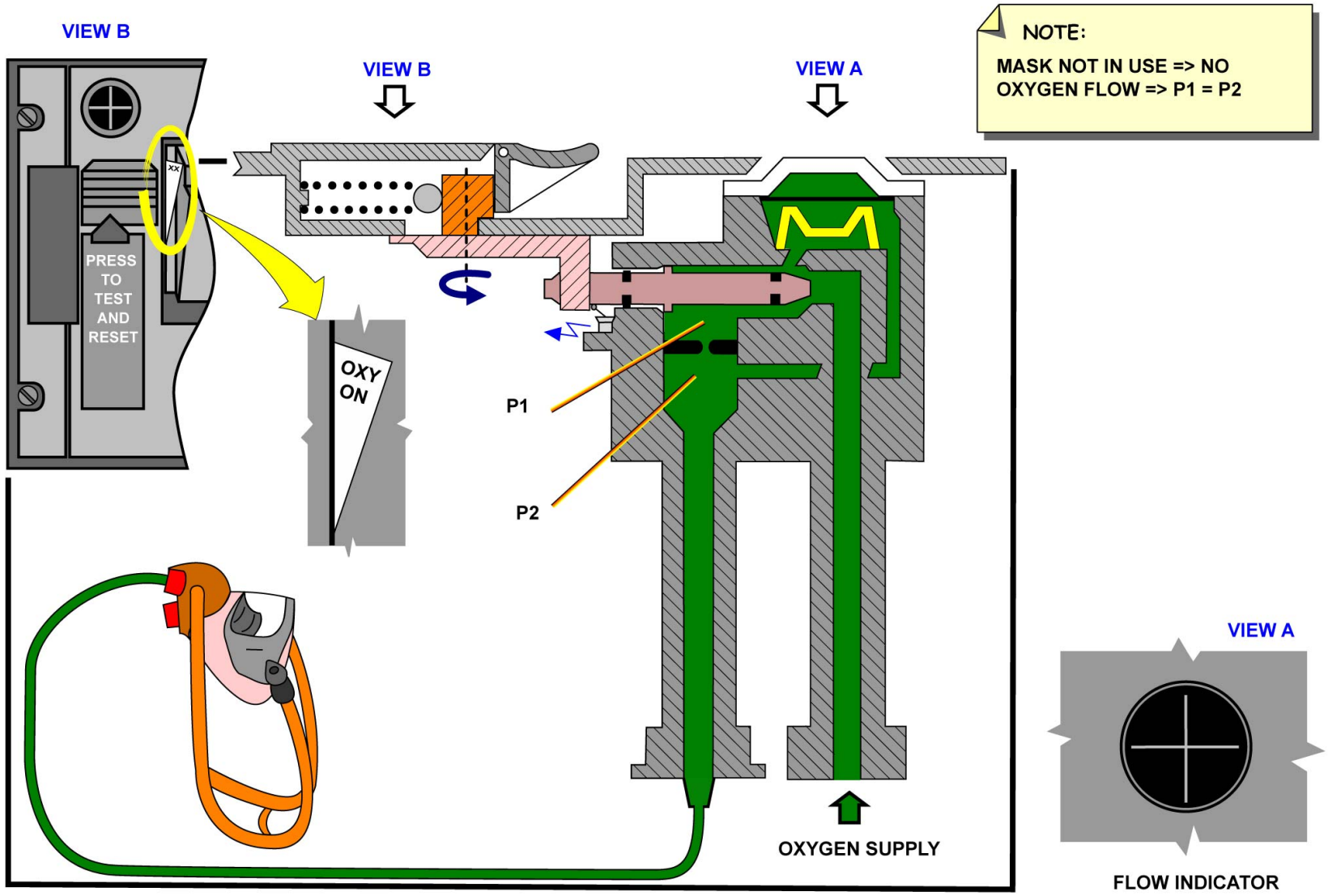

STOWAGE BOX/ SUPPLY VALVE OPERATION - MASK STOWED AFTER USE

G7508471 - G3NT1T0 - FM35D1F35A40102

FLIGHT CREW OXYGEN SYSTEM D/O (3)

STOWAGE BOX/ SUPPLY VALVE - RESET

By pressing then releasing the "PRESS TO TEST AND RESET" button on the left flap door after mask stowage the "OXY ON" flag goes out of view; the piston valve closes pushed by the slider/flap under spring force; mask oxygen supply is shut-off; the entrapped oxygen pressure in the flexible hose is vented, the microphone is getting de-activated by the proximity switch opening.

G7508471 - G3NT1T0 - FM35D1F35A40102

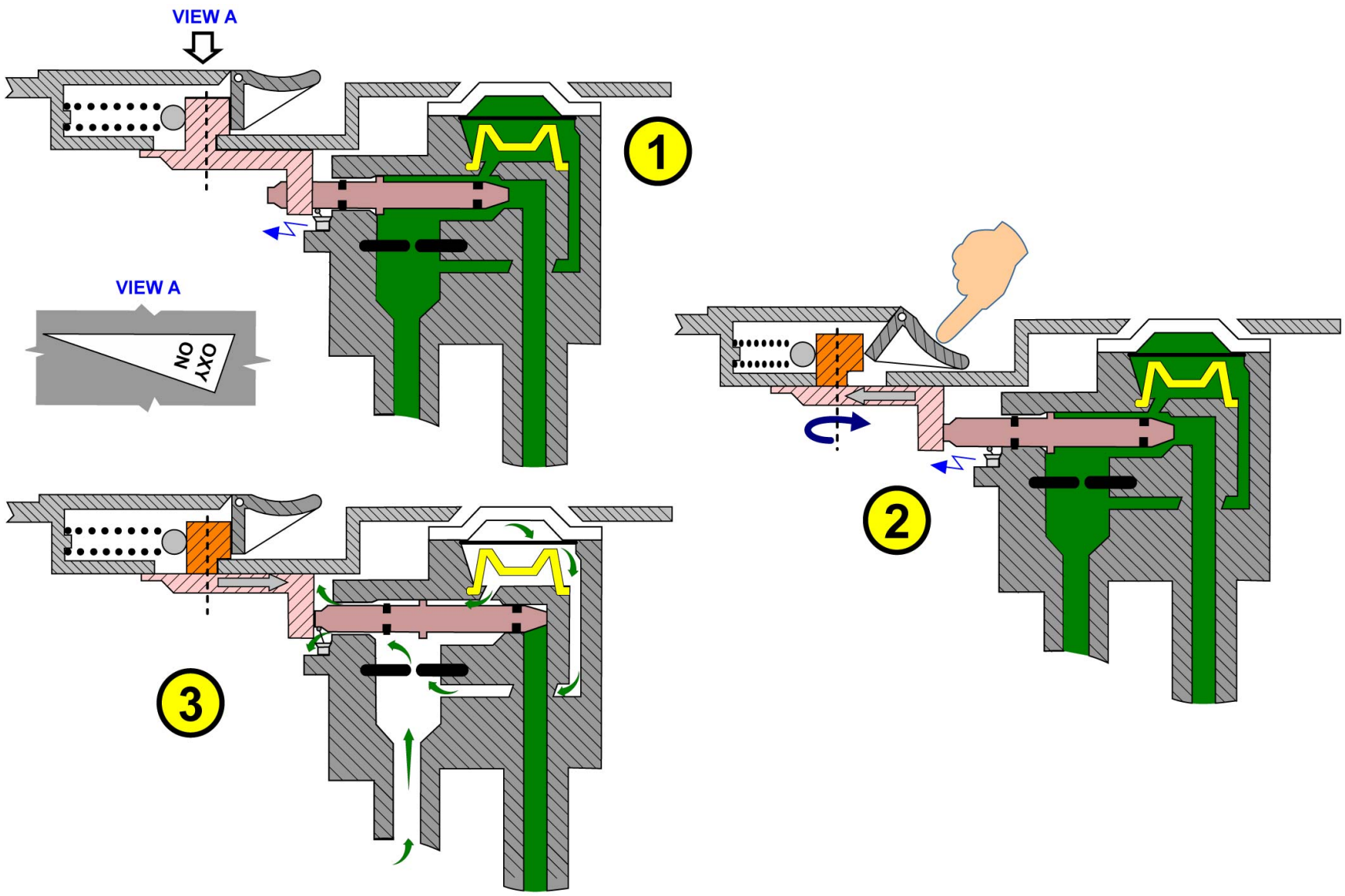

STOWAGE BOX/ SUPPLY VALVE - RESET

G7508471 - G3NT1T0 - FM35D1F35A40102

FLIGHT CREW OXYGEN SYSTEM D/O (3)

MASK IN SITU OPERATIONAL TEST - LEAK TEST

Sealing of the flexible hose and regulator can be checked in situ by pressing the "PRESS TO TEST AND RESET" button on the left flap door: If there is no leak, pressing this button and holding it pressed the flow indicator turns yellow for a short time then goes black. In case of leakage the flow indicator remains yellow all the time the button is pressed.
Ref: AMM, Operational test of the Full-Face/Quick-donning Mask.

G7508471 - G3NT1T0 - FM35D1F35A40102

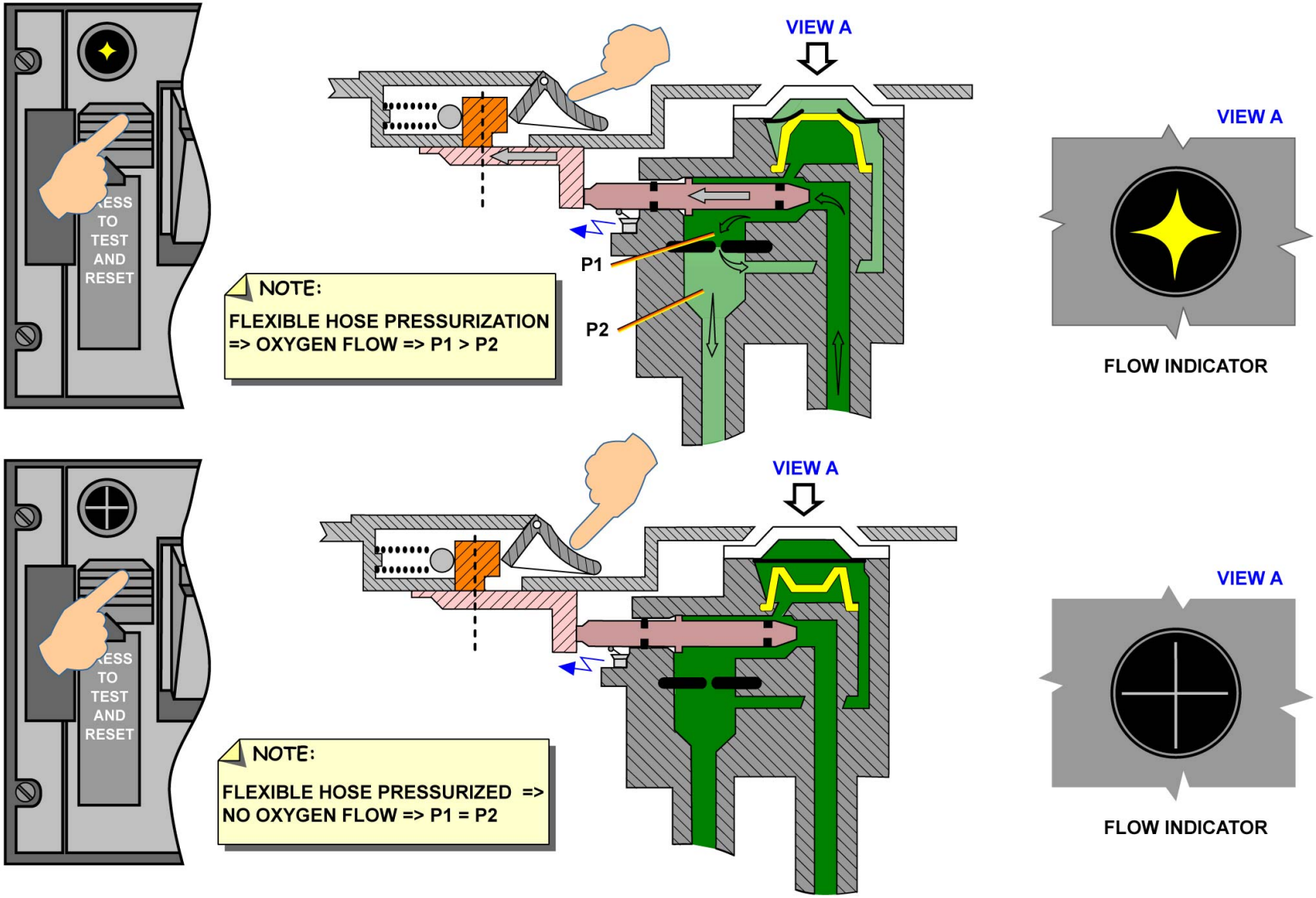

MASK IN SITU OPERATIONAL TEST - LEAK TEST

G7508471 - G3NT1T0 - FM35D1F35A40102

FLIGHT CREW OXYGEN SYSTEM D/O (3)

MASK IN SITU OPERATIONAL TEST - OXYGEN SUPPLY / MICROPHONE OPERATION

Oxygen flow through the mask regulator and microphone operation can be checked in situ by pressing simultaneously the "PRESS TO TEST AND RESET" button on the left flap door and the "PRESS TO TEST / EMERGENCY" knob on the mask regulator.

G7508471 - G3NT1T0 - FM35D1F35A40102

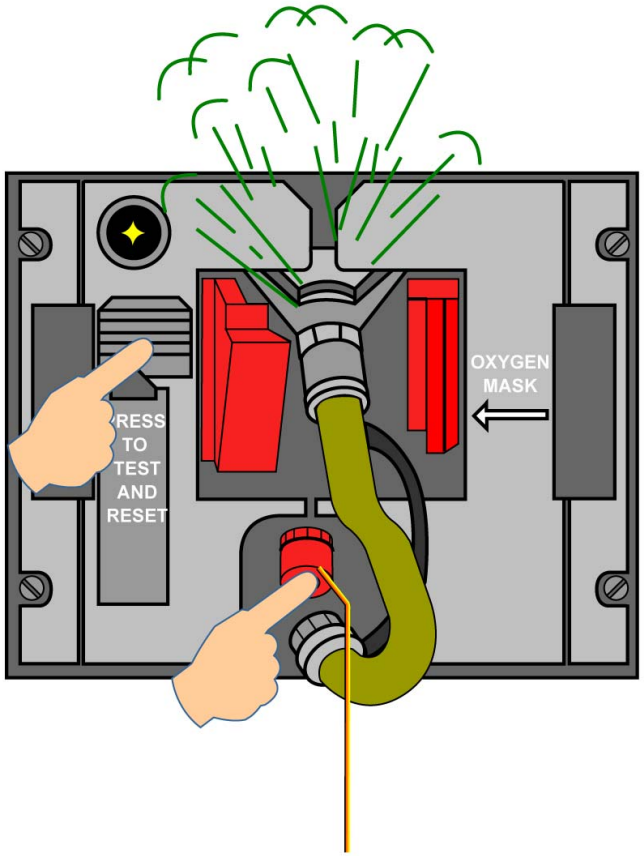

PRESS TO TEST / EMERGENCY KNOB

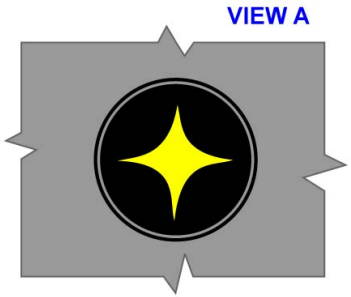

FLOW INDICATOR

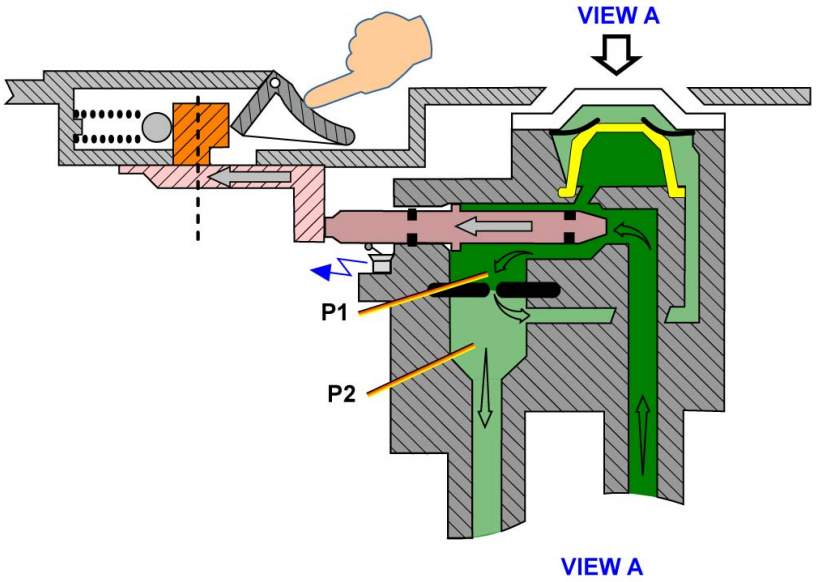

MASK IN SITU OPERATIONAL TEST - OXYGEN SUPPLY / MICROPHONE OPERATION

G7508471 - G3NT1T0 - FM35D1F35A40102

FLIGHT CREW OXYGEN SYSTEM D/O (3)

CREW MASKS

The mask is connected to the stowage box via a flexible supply hose and a microphone cable fitted with a quick disconnect.
The mask face piece is equipped with a microphone and an inflatable harness which maintains the mask tight against the user's face.

MICROPHONE

The microphone allows radio communications when the mask is used.
The pressure switch, fitted on the stowage box supply valve, enables the operation of the microphone only when the mask is supplied by oxygen pressure.

G7508471 - G3NT1T0 - FM35D1F35A40102

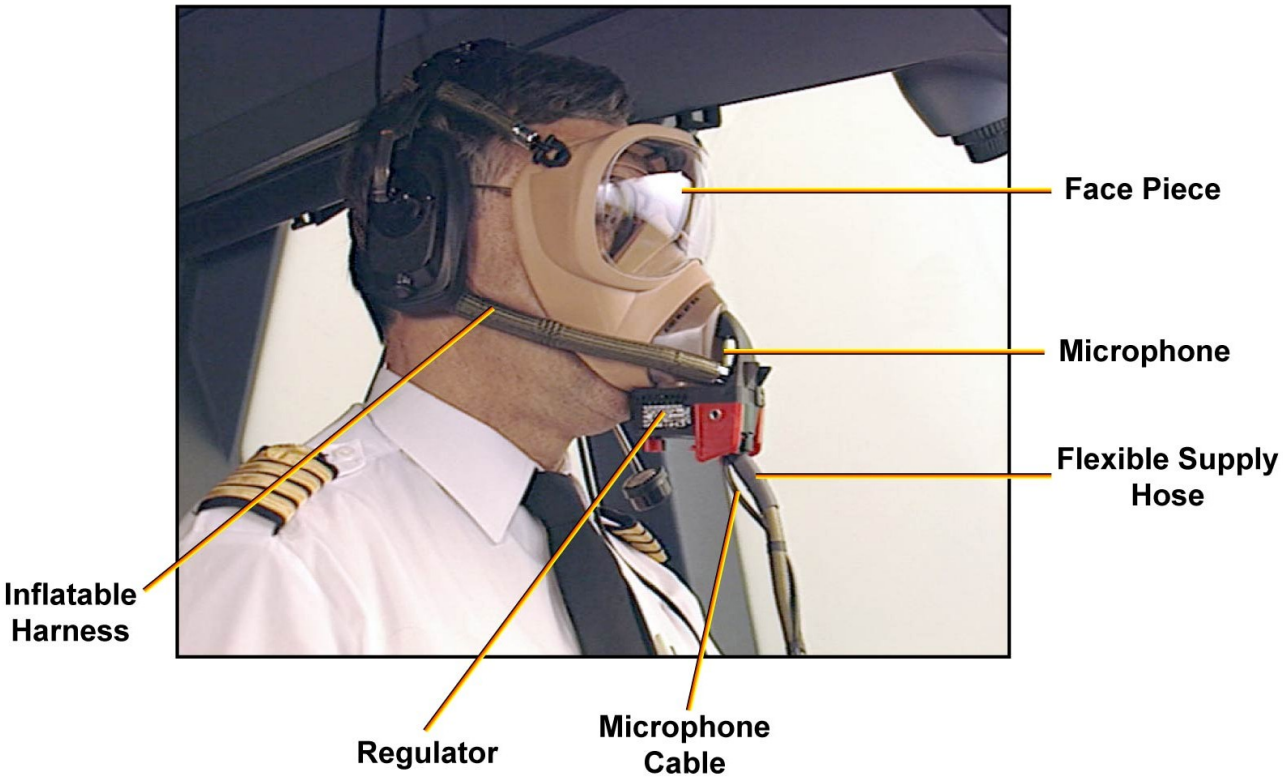

CREW MASKS & MICROPHONE

G7508471 - G3NT1T0 - FM35D1F35A40102

FLIGHT CREW OXYGEN SYSTEM D/O (3)

REGULATOR

The regulator is fitted on the mask and controls the air/oxygen flow. The regulator performs the following functions.
It performs air and oxygen dilution. When the normal/100% selector is in the normal position, the user breathes a mixture made of cabin air and oxygen on demand. The regulator comprises one aneroid capsule that provides cabin air and oxygen mixed together and regulated up to 35,000 ft. Above this altitude it is oxygen only.
It performs 100% oxygen supply without overpressure. When the normal/100% selector is set to 100%, the user breathes pure oxygen at all altitudes.
It performs automatic overpressure. The regulator comprises a second aneroid capsule that provides automatic overpressure above 30,000 ft cabin altitude.
It performs a regulator functional test. The regulator can be tested by pressing the TEST/EMERGENCY knob.
It also performs an emergency function. When the TEST/EMERGENCY knob is turned to the EMERGENCY position, continuous oxygen overpressure is supplied to the mask.
It also controls harness inflation. The inflatable harness is inflated when the inflation control plates are squeezed.

G7508471 - G3NT1T0 - FM35D1F35A40102

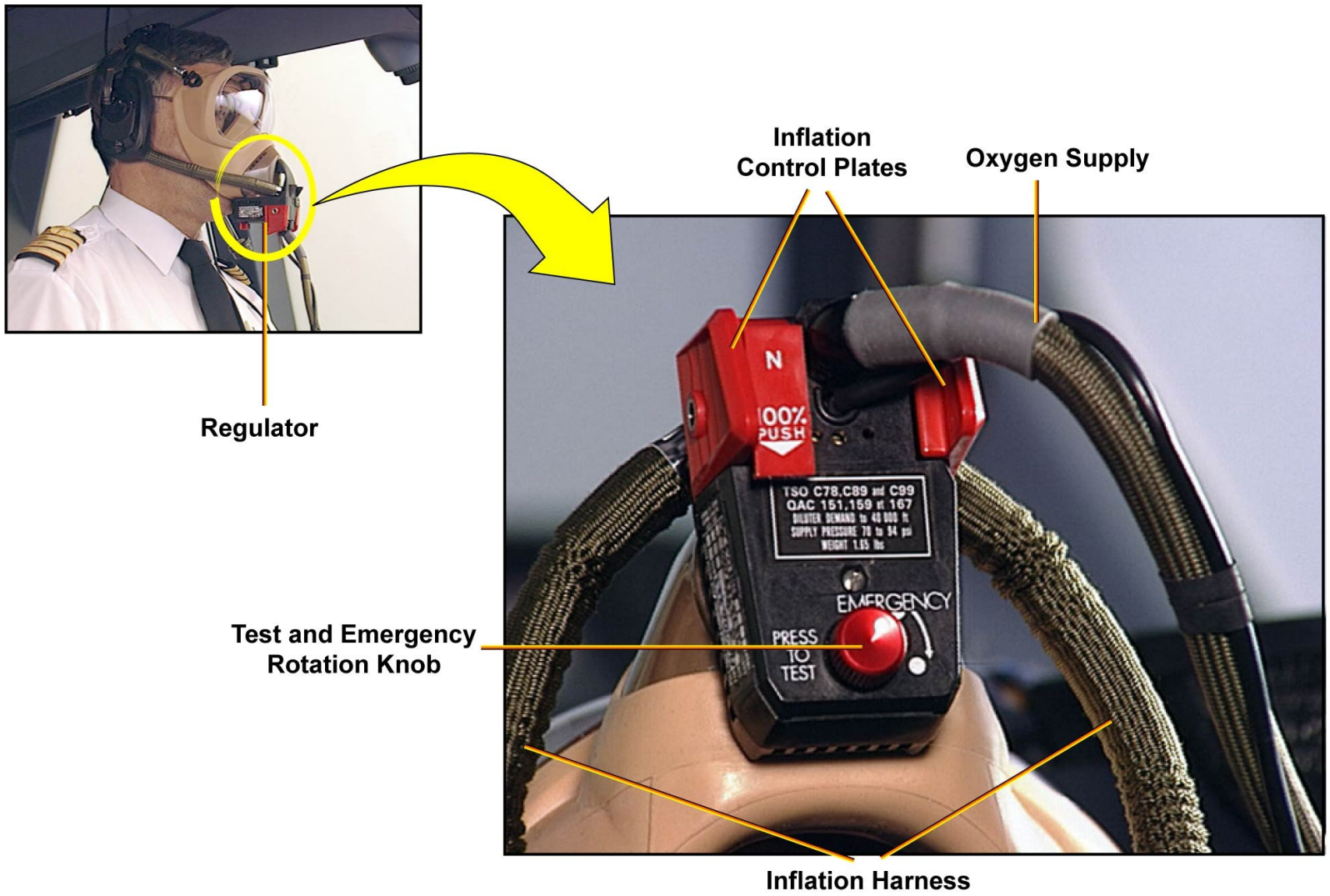
Inflation
Control Plates
Oxygen Supply
Regulator
N
100%
PUSH
TSO C78,C89 and C99
QAC 151,159 at 167
EMERGENCY
PRESS
TO
TEST
Test and Emergency
Rotation Knob
Inflation Harness

REGULATOR

FLIGHT CREW OXYGEN SYSTEM D/O (3)

CREW INTEGRAL OXYGEN MASK IN SITU TEST VIDEO

The video presents the cockpit oxygen masks.

G7508471 - G3NT1T0 - FM35D1F35A40102

CREW INTEGRAL OXYGEN MASK IN SITU TEST VIDEO

G7508471 - G3NT1T0 - FM35D1F35A40102

PASSENGER OXYGEN SYSTEM D/O (3)

TRIGGERING

The chemical oxygen generator supplies a flow of LP oxygen for a minimum time of 22 minutes for the A340-500/600 and 15 minutes for the A330-200/300, A340-300. In case of rapid cabin depressurization, oxygen masks are automatically presented to passengers.

G7508471 - G3NT1T0 - FM35D2F35B20102

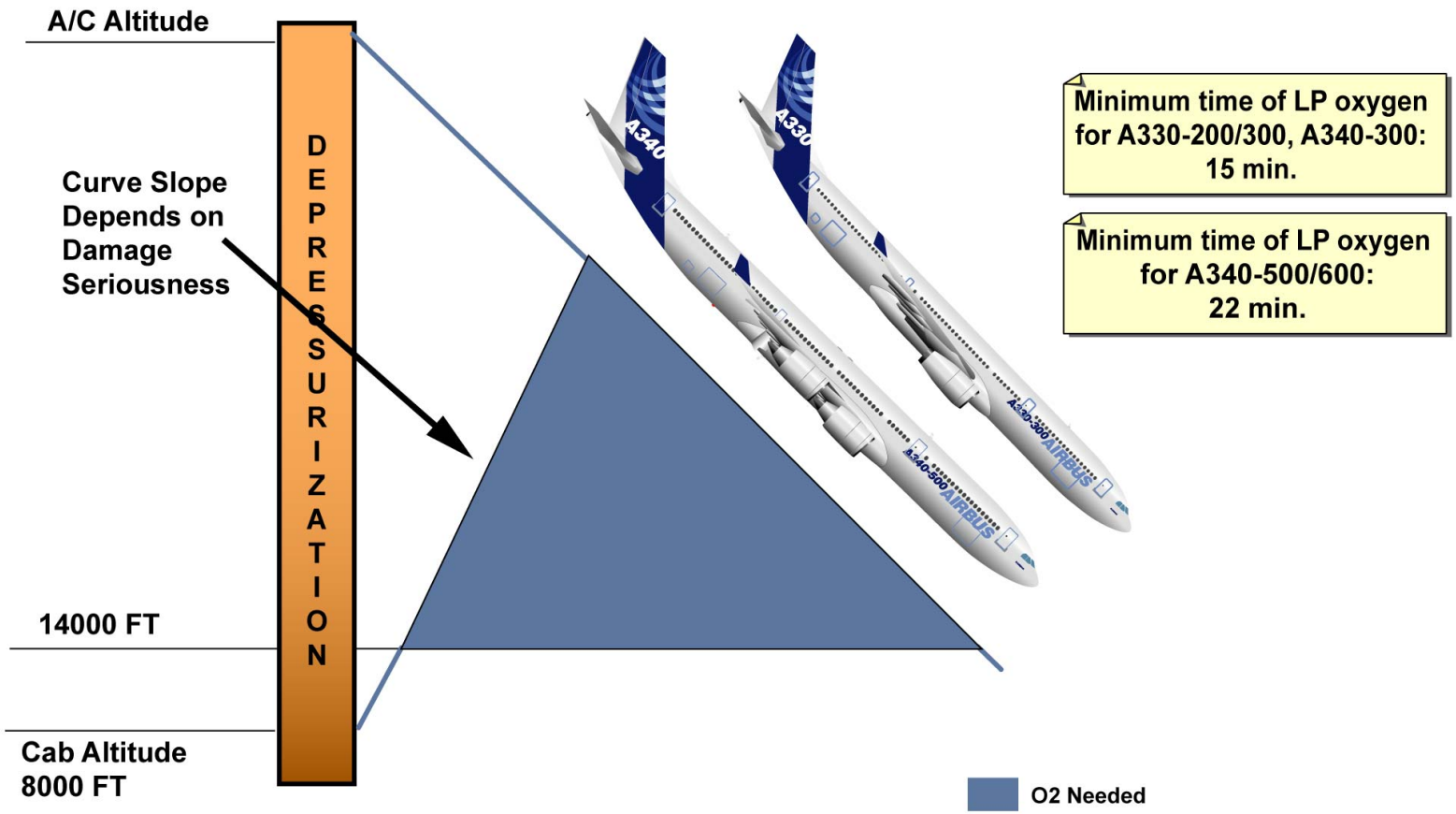

TRIGGERING

G7508471 - G3NT1T0 - FM35D2F35B20102

PASSENGER OXYGEN SYSTEM D/O (3)

PASSENGER OXYGEN SYSTEM OPERATION

The possible modes of operation of the passenger oxygen system described in this topic are the automatic, manual and reset modes of operation.

AUTOMATIC OPERATION

The system operates automatically when the altitude pressure switch closes. A taped announcement is transmitted over the passenger address system. The taped announcement may be stopped by momentarily pressing the OXYGEN TiMeR RESET P/BSW.
After 6 seconds the time delay relays supply the door latch assemblies via another circuit for safety.
The FAULT light on the OXYGEN TiMeR RESET P/BSW comes on if a failure of both SWITCH OFF relays occurs.

G7508471 - G3NT1T0 - FM35D2F35B20102

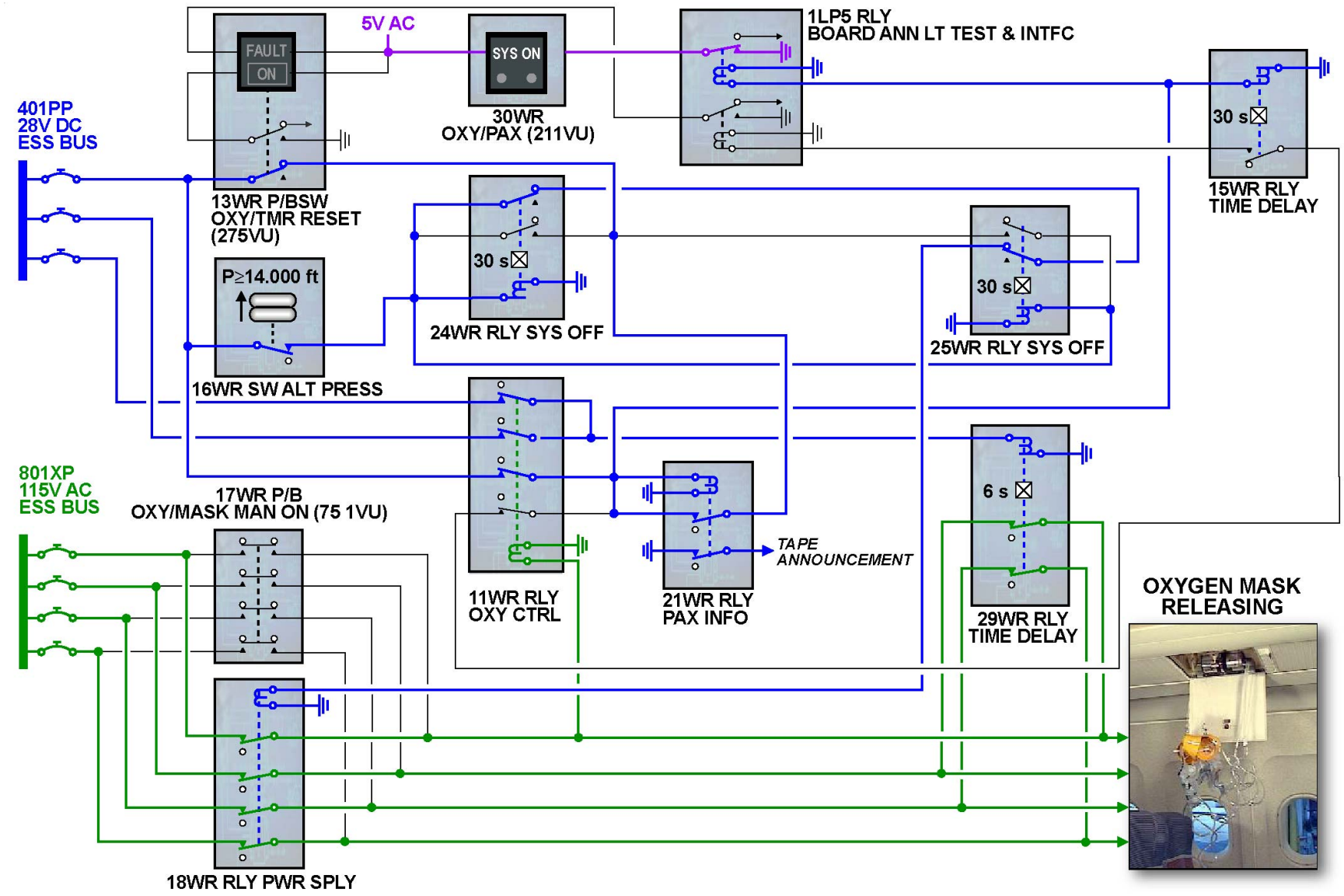

PASSENGER OXYGEN SYSTEM OPERATION - AUTOMATIC OPERATION

G7508471 - G3NT1T0 - FM35D2F35B20102

PASSENGER OXYGEN SYSTEM D/O (3)

PASSENGER OXYGEN SYSTEM OPERATION (continued)

MANUAL OPERATION

The passenger oxygen masks may be presented at any time via a MASK MAN ON P/B. The manual override relays are energized and supply the door electrical assembly control circuits.
The passenger info and switch off relays are energized via the control relays.
Pressing momentarily the OXYGEN TiMeR RESET P/BSW may stop the taped announcement transmitted over the passenger address system.

RESET OPERATION

Momentarily pressing the TiMeR RESET P/BSW deactivates the passenger info and switch off relays via the fault relays. Momentarily pressing the TiMeR RESET P/BSW on the maintenance panel resets the system.
On ground, used chemical oxygen units must be replaced and all masks restored.

FAULT OPERATION

When the cabin altitude is more than 14.000 ft and relay 24WR and 25WR remain open after delay:
- relay 15WR is energized,
- the FAULT amber light comes on,
- the SYS ON white light and Passenger Address systems are still on.

The FAULT light on the TMR RESET P/B comes on if a failure of the TIME DELAY RELAYS occurs.

G7508471 - G3NT1T0 - FM35D2F35B20102

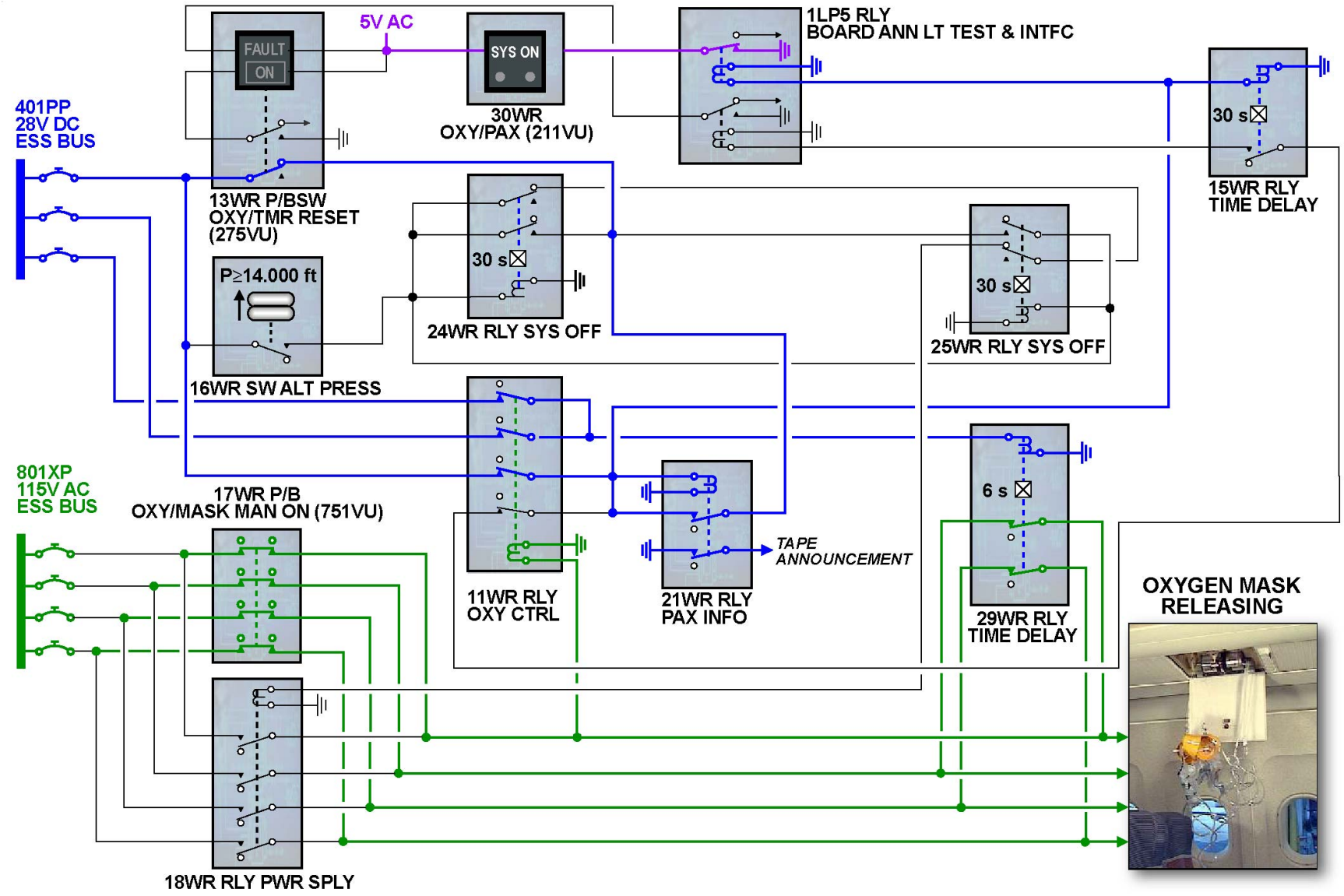

PASSENGER OXYGEN SYSTEM OPERATION - MANUAL OPERATION ... FAULT OPERATION

G7508471 - G3NT1T0 - FM35D2F35B20102

PASSENGER GASEOUS OXYGEN SYSTEM D/O (3)

GENERAL

The cabin fixed oxygen system supplies (automatically or manually controlled) oxygen to the occupants, in case of cabin depressurization.
The system stores its oxygen in interconnected cylinders (5 up to 18), behind the right hand sidewall lining in the forward cargo compartment.
The oxygen goes to the mask containers in the cabin, via two main supply lines and a network of pipes.
The containers are above the passenger seats, in the lavatories, in each galley, at each cabin crew station and if installed (option) in Flight Crew Rest Compartment (FCRC) and Bulk Crew Rest Compartment (BCRC).
Each container has 2, 3, 4 or 5 masks.
Two oxygen regulators control the flow rate.
The Quantity Calculation and Control Unit (QCCU) supplies the value of the average temperature compensated pressure indicated on the ECAM system page, and a not temperature compensated to the oxygen servicing panel.

G7508471 - G3NT1T0 - FM35D3000000001

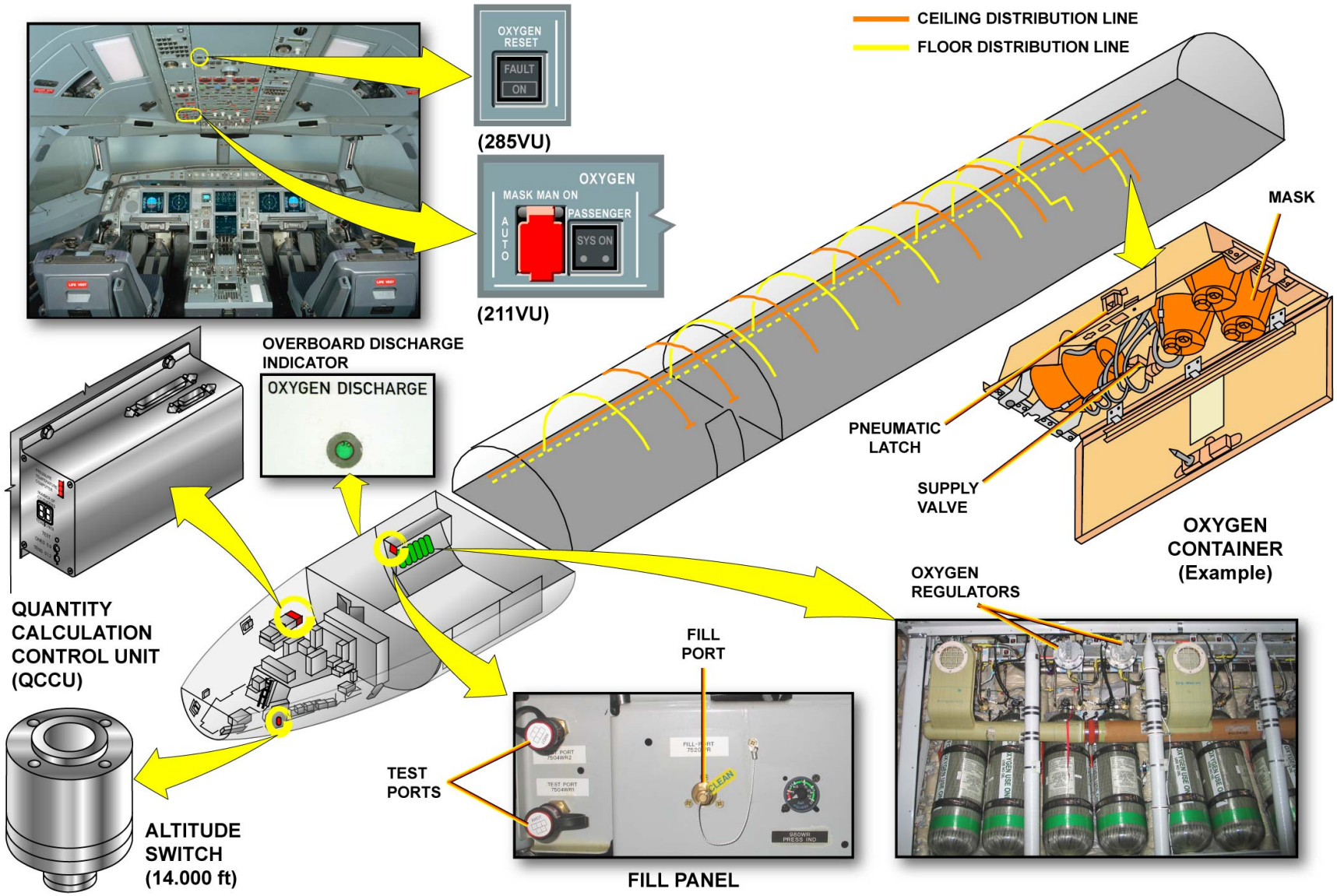
OXYGEN RESET
FAULT
ON
(285VU)
OXYGEN
MASK MAN ON
AUTO
PASSENGER
SYS ON
(211VU)
CEILING DISTRIBUTION LINE
FLOOR DISTRIBUTION LINE
MASK
OVERBOARD DISCHARGE INDICATOR
OXYGEN DISCHARGE
PNEUMATIC LATCH
SUPPLY VALVE
OXYGEN CONTAINER (Example)
OXYGEN REGULATORS
QUANTITY CALCULATION CONTROL UNIT (QCCU)
FILL PORT
TEST PORTS
ALTITUDE SWITCH (14.000 ft)
FILL PANEL

GENERAL

PASSENGER GASEOUS OXYGEN SYSTEM D/O (3)

MAIN COMPONENTS

OXYGEN STORAGE

The passenger gaseous emergency oxygen is contained in the passenger oxygen storage system.
The emergency oxygen is kept in the oxygen cylinders (nominal pressure 1850 psi (127 bars) at 21°C.
The Pressure Reducer outlet is nominally 130 psi.
The storage system also lets you fill the cylinder assemblies.
OVERPRESSURE PROTECTION:
- Cylinder pressure above 2770 psi (191 bar), a Safety Disk shears and the related cylinder empties overboard.
- Pressure in the low pressure system above 233 psi (16 bar), an independent Pressure Relief Valve relieves the excess of pressure overboard.
In all cases, the green indicator is blown out.

OXYGEN CONTROL AND INDICATING

The passenger oxygen control can be done either:
- automatically when the cabin altitude exceeds 14000 ft (altitude switch)
- or manually from the MASK MAN ON switch.

NOTE: The oxygen container door can be mechanically unlatched by means of a manual release tool.

Information about the condition of the passenger oxygen system is given on:
- the ECAM,
- the OXYGEN panel 211VU and the maintenance panel 285VU.
- the MCDU and QCCU front face.

DISTRIBUTION

When the passenger oxygen distribution system is operated, the pressure reducer supplies low-pressure oxygen via two electro-pneumatic oxygen regulators to the two main supply lines. One line is installed below the cabin floor along the RH side of the aircraft
This makes sure that sufficient oxygen is available for the passengers and the cabin crew if one of the supply lines is damaged in case of engine burst. The passenger oxygen distribution system supplies emergency oxygen to each oxygen container above the passenger seats, in the lavatories, at the cabin attendant stations and optionally the crew rest rooms.
The system is only pressurized in an emergency.
Flexible hoses connect the emergency oxygen containers to the supply system.

G7508471 - G3NT1T0 - FM35D300000001

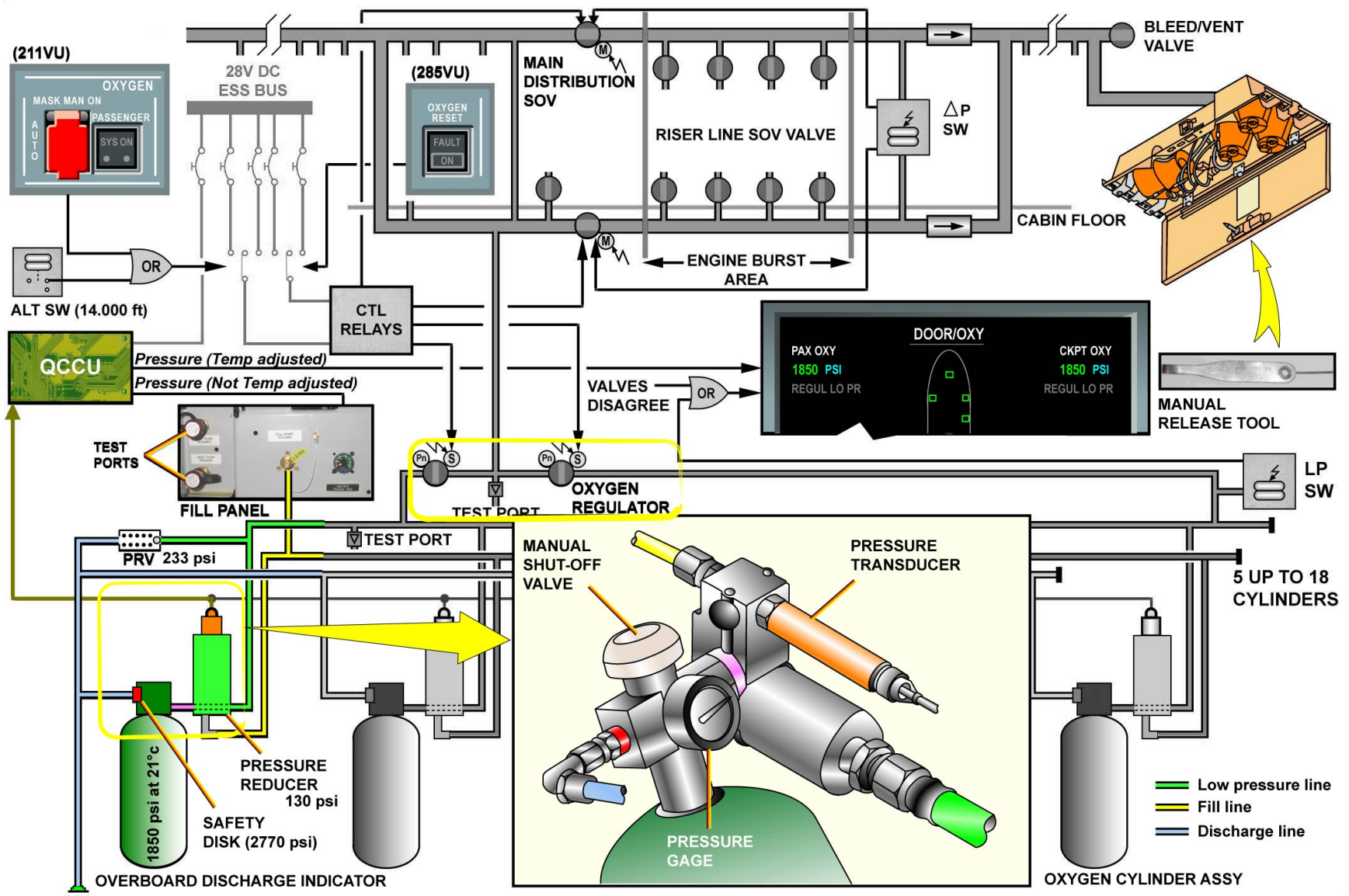

MAIN COMPONENTS - OXYGEN STORAGE ... DISTRIBUTION

G7508471 - G3NT1T0 - FM35D300000001

PASSENGER GASEOUS OXYGEN SYSTEM D/O (3)

OPERATION

BEFORE OPERATION

The pressure reducer reduces the bottle pressure, from 1850 psi to 130 psi.
The two oxygen regulators are closed.
The two main distribution Shut-Off Valves (SOVs) are open.
The bleed ventilation valve is open, to avoid a risk of pressure build up, or to cause the unlatching of the door.

G7508471 - G3NT1T0 - FM35D3000000001

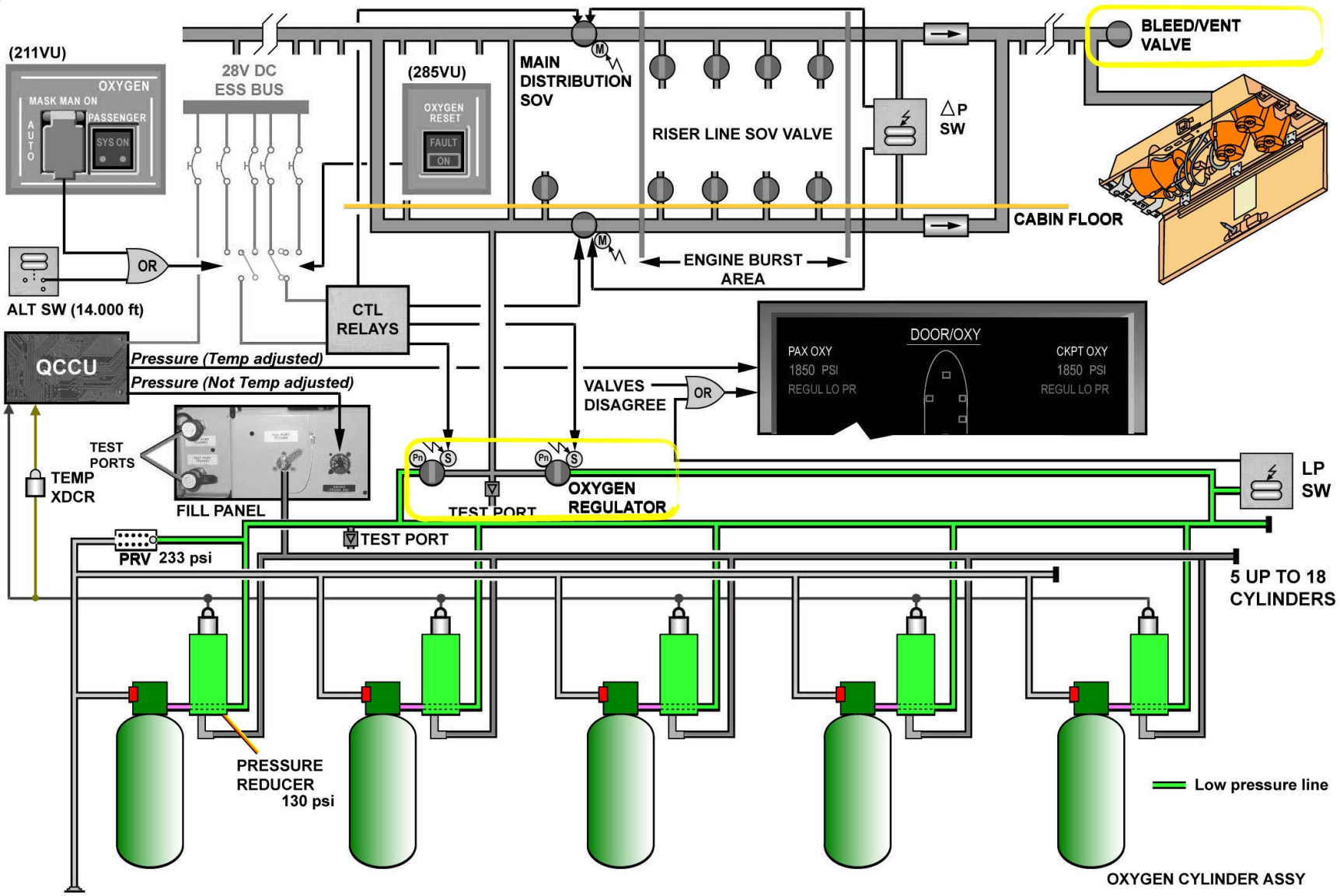

OPERATION - BEFORE OPERATION

G7508471 - G3NT1T0 - FM35D300000001

PASSENGER GASEOUS OXYGEN SYSTEM D/O (3)

OPERATION (continued)

DURING OPERATION

When the cabin pressure decreases to a pressure equivalent to 14.000 ft (4267 m) (+250/-750ft) the altitude pressure switch will close. This action operates the emergency oxygen system. If the altitude pressure switch does not operate, you can operate the MANual ON P/BSW on the OXYGEN panel, located on the overhead panel.
The oxygen regulators are energized, delivering a flow as a function of the cabin altitude.
The PASSENGER SYS ON light comes on, and the tape announcement is started.
The air caught in the distribution lines is bled through the open bleed/ventilation valve during 5 seconds, and then this valve closes.
The oxygen pressure builds up.
The pneumatically controlled door latches let the oxygen container doors open and the masks fall down.
The passenger pulls the mask to his face, which releases the oxygen flow release pin.
Oxygen is supplied to the mask.
An oxygen flow indication, which is the green part of the mask reservoir bag, inflates.
The Oxygen regulators are designed to supply a continuous flow of oxygen up to 556 masks (depending the version of aircraft).
The oxygen regulator is made of two parts:
- A pressure-regulation unit
- A shut-off valve

The pressure-regulation unit operates pneumatically in two operation modes.
-Surge mode: The surge pressure of 50 psi (3.4 bar) to 124 psi (8.6 bar) releases the oxygen/air mixture through the bleed/vent valve. After this there is no more air in the oxygen-distribution lines, but only oxygen. This surge of pressure also unlatches the mask container doors and makes oxygen available to the mask when de pressure is 21 psi (1.5 bar) and 43 psi (3.0 bar).
-Distribution mode: A continuous flow of oxygen is supplied to the masks at a suitable pressure based on the cabin altitude, between 6.4 psi (0.44 bar) at 10 000ft and 98.4 psi (6.8 bar) at 40 000ft.
The shut-off valve operates electrically.
It has two electrical inputs, one to open the valve, one to close it (at reset).
Each shut-off valve also has two electrical switches:
- The "valve fully open" switch, which operates the "SYS ON" light.
- The "valve not fully closed" switch, which possibly triggers a warning in case of disagreement between the valve position and the selection.

A test port is given for ground level simulation of high altitudes using a vacuum source. By using this method, the oxygen pressure schedule can be verified without removing the unit from the aircraft.

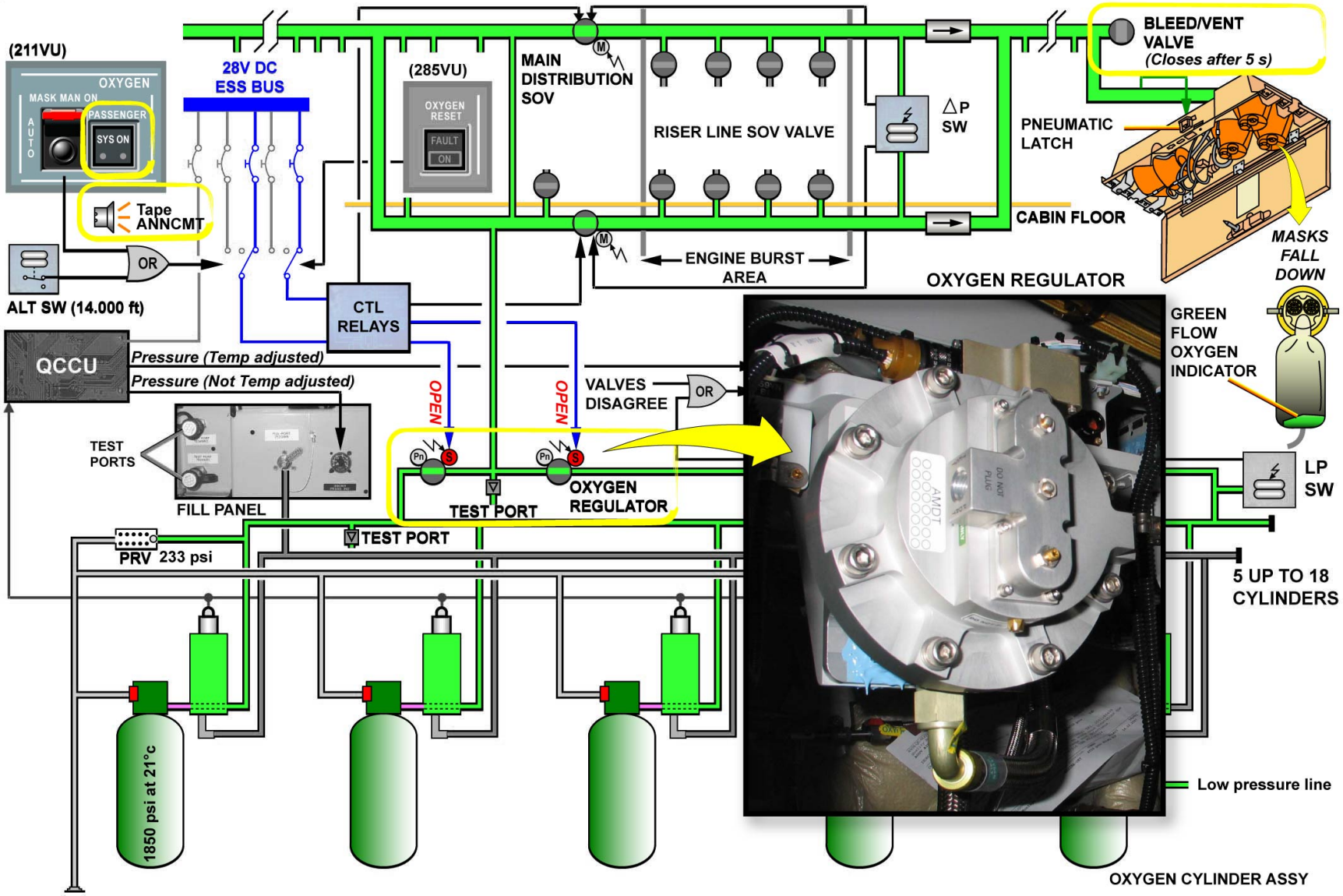

OPERATION - DURING OPERATION

G7508471 - G3NT1T0 - FM35D300000001

PASSENGER GASEOUS OXYGEN SYSTEM D/O (3)

RESET

RESET OPERATION

To set the system back to the initial configuration, the RESET P/BSW on the maintenance panel is pushed:
- the electrical circuit is set to the initial condition,
- the oxygen regulators close,
- the main distribution SOVs open, if they are closed.

The RESET P/BSW operates only if the cabin pressure is below 10.000 ft.

NOTE: Note: the Bleed/Vent Valve opens mechanically.

RESET INDICATING

The RESET ON light goes off when the reset is completed (3 seconds).
The PASSENGER SYS ON light goes off.

RESET FAILURE

The ON light in the RESET P/BSW, on the maintenance panel 285VU will not go off and the FAULT light comes on if:
- the electrical circuit for the gaseous system does not return to the initial condition.

The warning REGUL LO PR will be shown on the ECAM if:
- the gaseous system does not return to the normal condition after you push the RESET P/BSW,
- one of the oxygen regulators is not fully closed,
- one of the main distribution SOVs is not fully open,
- both main distribution SOVs close when the system has been operated.

G7508471 - G3NT1T0 - FM35D300000001

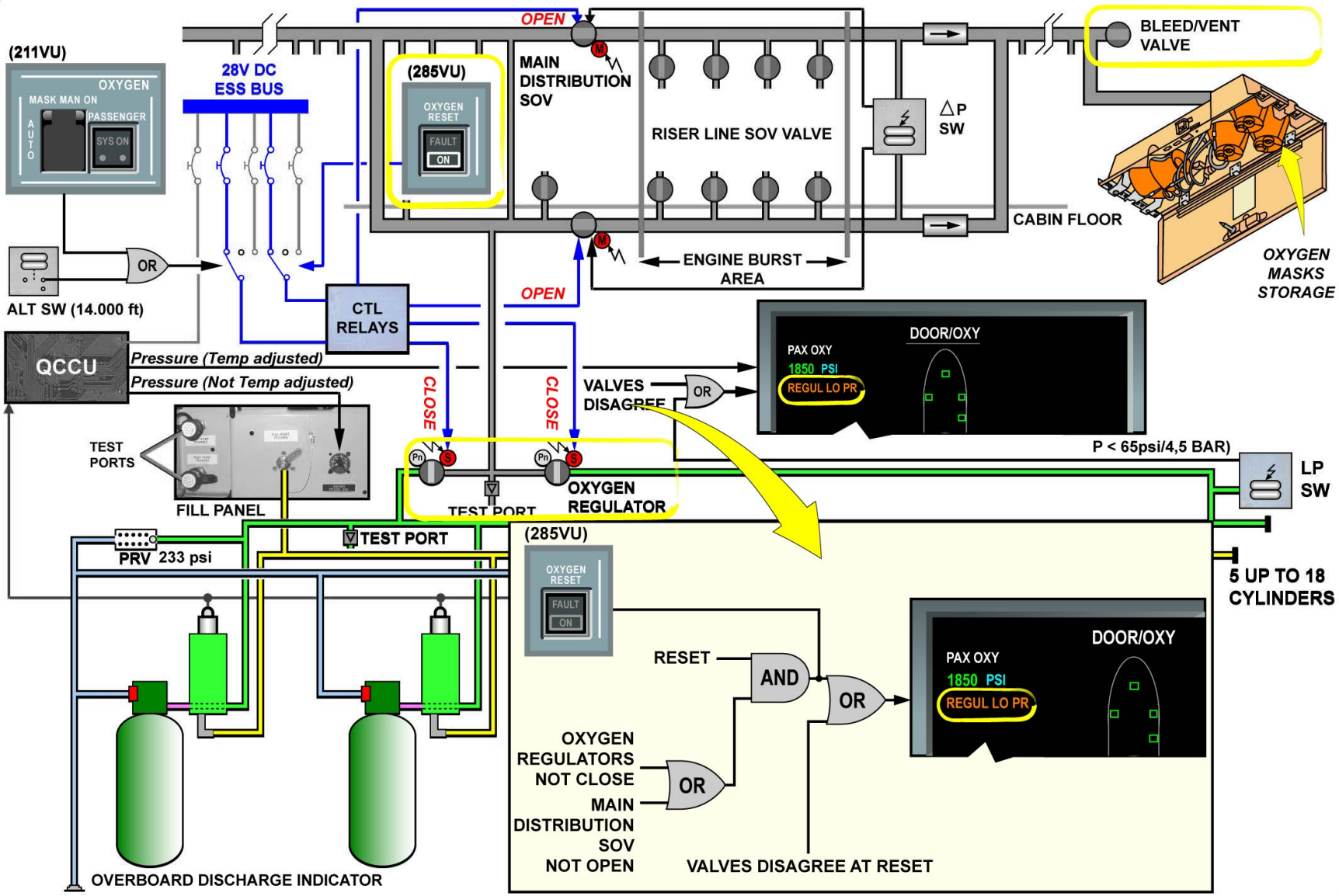

RESET - RESET OPERATION ... RESET FAILURE

G7508471 - G3NT1T0 - FM35D300000001

PASSENGER GASEOUS OXYGEN SYSTEM D/O (3)

ENGINE BURST

If an engine turbine bursts and damages a main oxygen supply line:
- the differential pressure SW sends a signal to the appropriate main distribution SOV,
- the appropriate main distribution SOV closes,
- the non-return valve will stop the oxygen supply to the related main supply line,

The riser line SOVs will stop the oxygen supply to a damaged riser or fall line.

DIFFERENTIAL PRESSURE SWITCH

The differential pressure SW compares the pressure in the two main distribution lines in the engine burst area. If the pressure difference between the lines is more than 3 psi (0.2 bar), the SW energizes the applicable main distribution SOV, which closes.

RISER LINE SOVs

The riser lines SOVs are installed in the engine burst area:
- on the riser lines at FR 37.2, 40.1, 46, 53.1 and 53.9,
- on the fall lines at FR 38, 41, 49 and 53.4.

They are installed immediately after the connection with the main supply line.
The riser line SOVs are pneumatically controlled so that oxygen is not supplied to a damaged riser line.
In normal operation, the riser line SOVs are open. They close if the flow increases more than 0.42 kg. min (0.9259 lb. min).
A valve will stay closed until the pressure difference across the valve is less than 14.5037 psi (1 bar).

G7508471 - G3NT1T0 - FM35D300000001

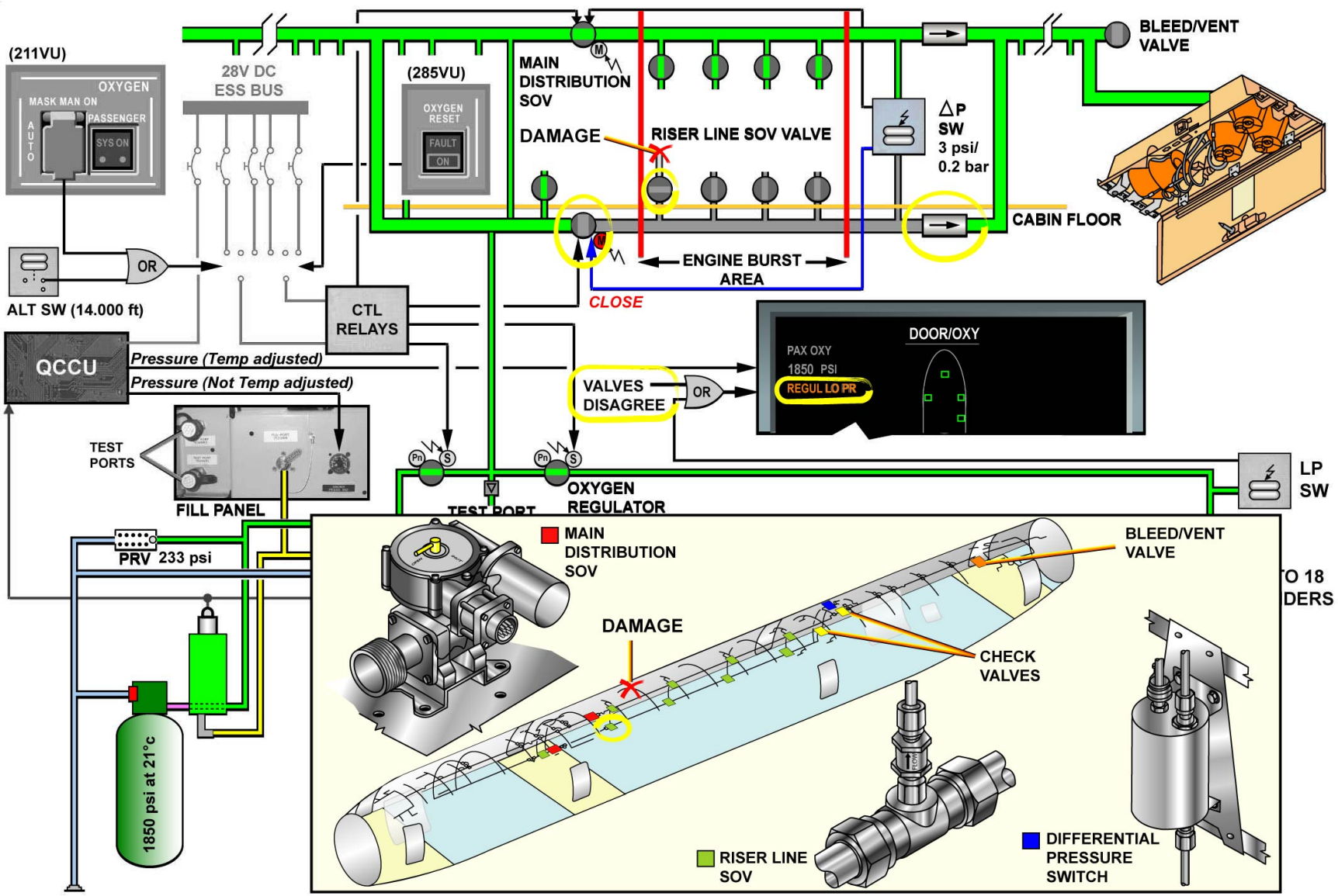

ENGINE BURST - DIFFERENTIAL PRESSURE SWITCH & RISER LINE SOVS

G7508471 - G3NT1T0 - FM35D300000001

PASSENGER GASEOUS OXYGEN SYSTEM D/O (3)

DOOR/OXY ECAM PAGE

The next slide introduces indicating concerning the passenger oxygen system on the DOOR/OXY ECAM page.

G7508471 - G3NT1T0 - FM35D3000000001

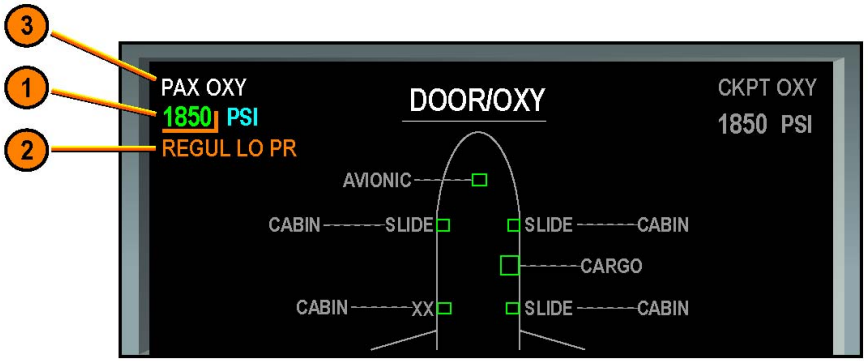

1 OXY high pressure indication

Green (steady) : When pressure is ≥ 1200 psi
Green (pulsing) : When pressure is ≥ 200 psi and < 1200 psi
Amber : When pressure is < 200 psi
An amber half frame appears when oxygen pressure is < 1600 psi

2 REGUL LO PR indication

Appears amber if :
- oxygen pressure on the low-pressure circuit is low (64 psi), or if the low pressure switch fails.
- One of the oxygen regulators is not fully closed and the system has not been activated.
- One of the main distrubution shut off valves is not fully open and the system has not been activated.
- Both main distrubution shut off valves are closed when the system has been activated.

3 PAX OXY indication

It is normally white.
It becomes amber when :
- Pressure goes below 200 psi.
- Low oxygen pressue is detected on the low pressure circuit.
- One or more oxygen cylinders are closed.

DOOR/OXY ECAM PAGE

G7508471 - G3NT1T0 - FM35D300000001

PASSENGER GASEOUS OXYGEN SYSTEM D/O (3)

CMC MESSAGES AND BITE

FAILURE MESSAGE TO THE CMC

The applicable message is sent to the CMC if:
- the QCCU fails,
- a pressure transducer fails,
- the temperature transducer fails,
- one or more oxygen regulator or the main distribution SOVs is not in the correct position,
- both main distribution SOVs are closed,
- the pressure after the pressure reducers is too low,
- the low pressure SW fails.

TEST/BITE

The QCCU has power up test and a continuous test. It checks:
- the pressure transmitters,
- the temperature transducer,
- the QCCU.

G7508471 - G3NT1T0 - FM35D3000000001

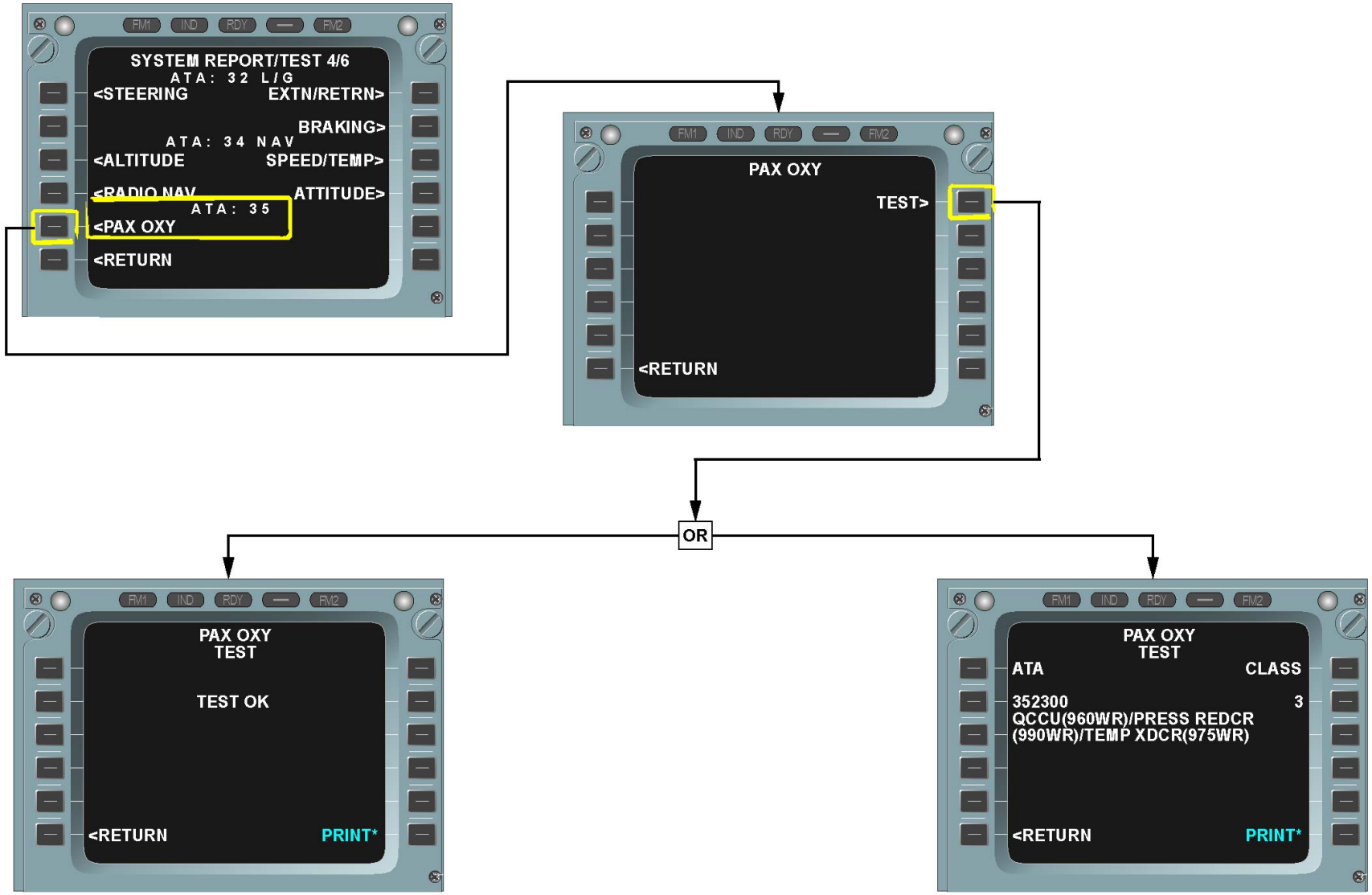

CMC MESSAGES AND BITE - FAILURE MESSAGE TO THE CMC & TEST/BITE

G7508471 - G3NT1T0 - FM35D300000001

PASSENGER GASEOUS OXYGEN SYSTEM D/O (3)

QCCU TEST

There is a warning light on the QCCU for each of the faults. The related light (PRESSURE, COMPUTER or TEMPERATURE) comes on when a fault occurs.
If the fault is corrected, the light stays on until the QCCU is reset or the power is switched off.
The QCCU has a TEST P/B to test the lights on the unit.

NOTE: Before you do a test, you must pull out the door stops and turn them to 90 degrees.
This makes sure that the oxygen masks do not fall out.

To make sure that a door latch assembly releases the door, you can do a ground test with the manual release tool.
To make sure that the pneumatic latches operate correctly; you can do a functional test with the MANual ON P/BSW.
After a functional test, you must also release the pressure from the system through the bleed/vent valve.
After a test, you must close the doors, turn the doors stops to 90 degrees and release them.
After a functional test, you must push the RESET P/BSW to set the system back to initial.

G7508471 - G3NT1T0 - FM35D3000000001

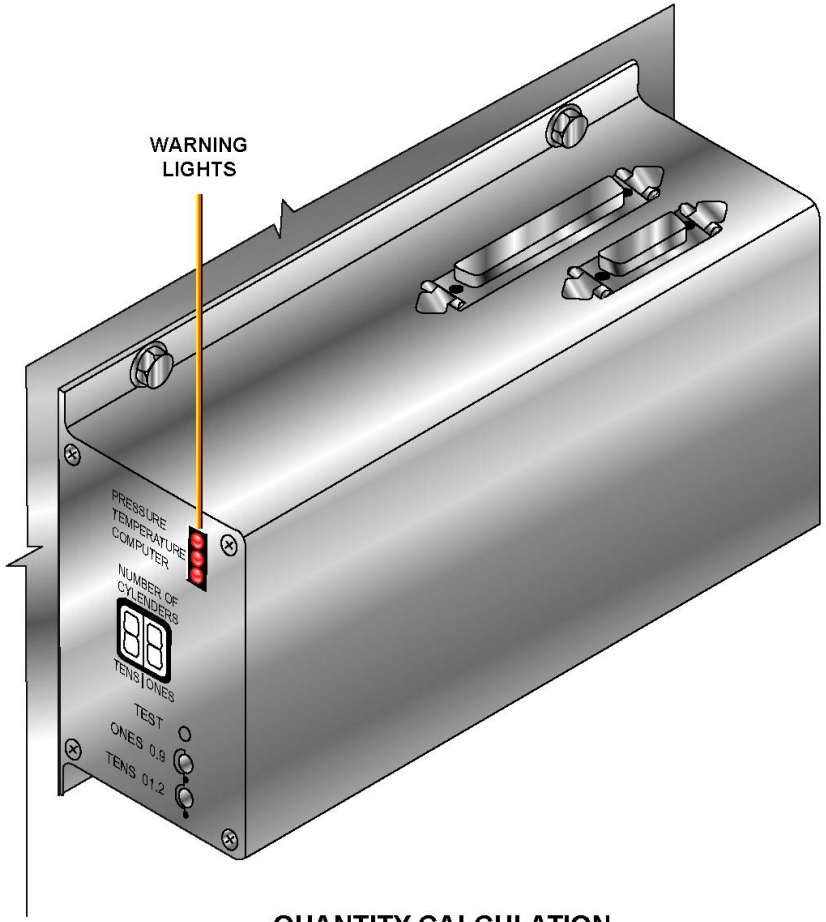

QUANTITY CALCULATION
CONTROL UNIT
(QCCU)

OXYGEN CONTAINER IN TEST POSITION

DOOR STOP
IN TEST POSITION

QCCU TEST

AIRBUS S.A.S.
31707 BLAGNAC cedex, FRANCE
STM
REFERENCE G7508471
NOVEMBER 2008
PRINTED IN FRANCE
AIRBUS S.A.S. 2008
ALL RIGHTS RESERVED

AN EADS COMPANY

A330-200/300
TECHNICAL TRAINING MANUAL
MAINTENANCE COURSE - T1 (LVL 2&3) (RR Trent 700)
PNEUMATIC

This document must be used for training purposes only

Under no circumstances should this document be used as a reference

It will not be updated.

All rights reserved
No part of this manual may be reproduced in any form,
by photostat, microfilm, retrieval system, or any other means,
without the prior written permission of AIRBUS S.A.S.

AIRBUS Environmental Recommendation
Please consider your environmental responsability before printing this document.

PNEUMATIC

Pneumatic Line Maintenance Briefing (RR700) (2) 2
Bleed Air Distribution & Supply D/O (RR700) (3) 22
Engine Bleed Air Managmnt SYS Gen. D/O (RR) (3) 30
Engine Bleed Air Transfer System D/O (3) 34
Engine Bleed Air Press. Reg. SYS D/O (PW&RR) (3) 44
Engine Bleed Air TEMP Regulation SYS D/O (3) 48
Leak Detection System D/O (3) 54

MAINTENANCE PRACTICE

Pneumatic System Base Maintenance (3) 58

PNEUMATIC LINE MAINTENANCE BRIEFING (RR700) (2)

SYSTEM OVERVIEW

The pneumatic system is used to supply air to various A/C systems. This module will review:
- the system sources and users,
- the engine APU and High Pressure (HP) ground unit bleed air management system,
- the leak detection system,
- and the control and indicating.

This module will also introduce some typical line maintenance activities.

G7508471 - G3NT1T0 - FM36B100000003

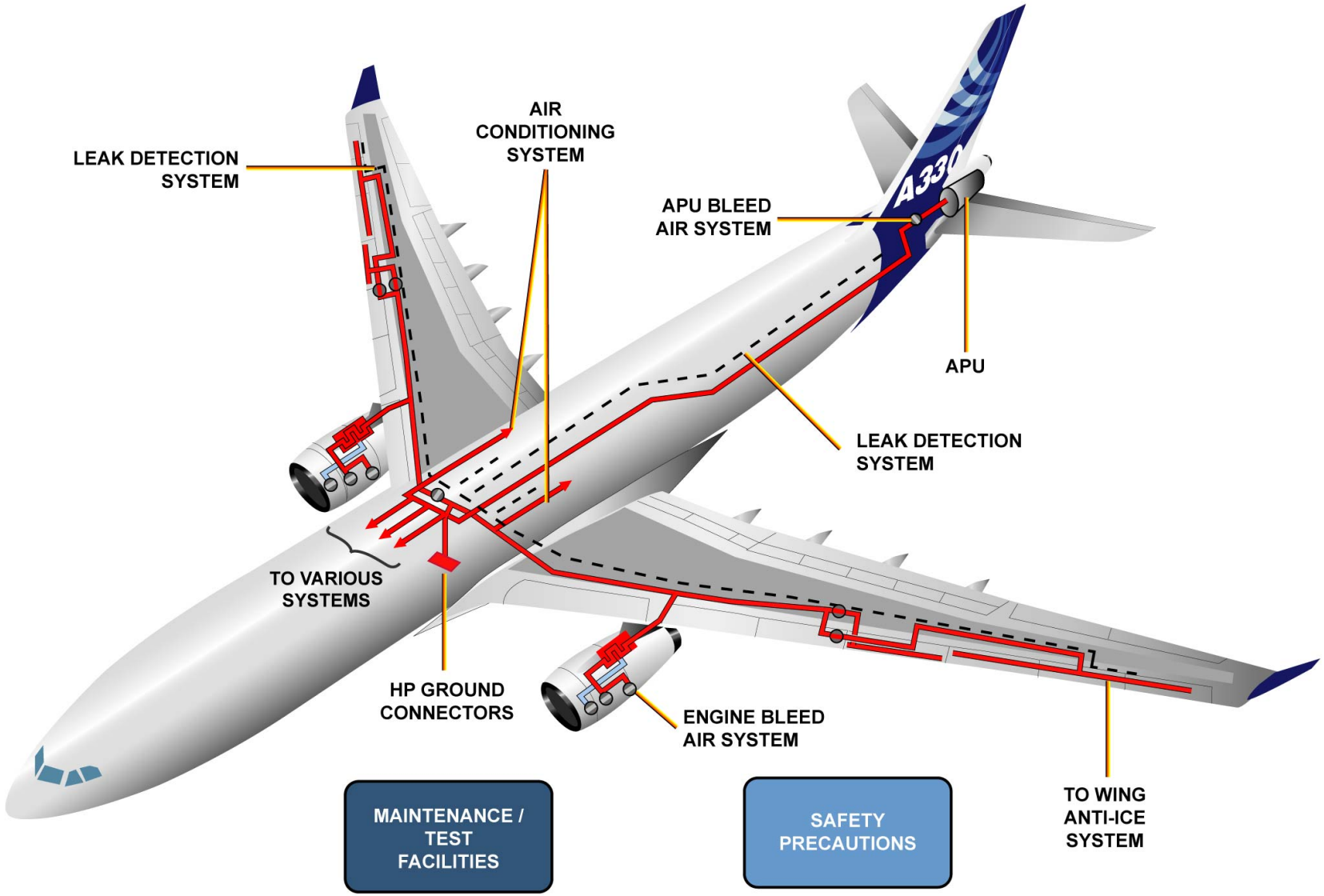

SYSTEM OVERVIEW

G7508471 - G3NT1T0 - FM36B100000003

PNEUMATIC LINE MAINTENANCE BRIEFING (RR700) (2)

SYSTEM OVERVIEW (continued)

SOURCES AND USERS

The pneumatic system is used to supply temperature and pressure regulated air to various A/C systems.
The pneumatic system may be supplied with HP bleed air from 3 types of sources:
- ground cart,
- APU,
- engines.

The bleed air is distributed to different users via a distribution and supply ducting network. These users are:
- the water system pressurization,
- the hydraulic reservoir pressurization,
- the wing anti-icing system,
- the engines starting systems,
- the air conditioning compartment ventilation system,
- the air conditioning packs.

The pneumatic system operates pneumatically and is monitored by two Bleed Monitoring Computers (BMCs) 1 and 2.
There is one BMC for each engine bleed system. Both adjacent BMCs exchange data. If one adjacent BMC fails, the other BMC takes over most of its monitoring functions.

ENGINE BLEED

The engine bleed air is pressure and temperature regulated prior to supplying the pneumatic system. Air is bled from two engine High Pressure Compressor (HPC) stages, the Intermediate Pressure (IP) stage and the HP stage.
The HP bleed is only used when the engines are at low power. The Intermediate Pressure Check Valve (IPC) and High Pressure Valve (HPV) control the bleed air supply. Once the IP bleed is sufficient, the HPV closes and the IPC opens.
All the engine bleed air is supplied to the pneumatic system through the main engine bleed valve (or Pressure Regulating Valve (PRV)), which acts as a shut off and overall system pressure regulating valve. Each BMC monitors system pressure and will shut down the engine bleed in case of excessive pressure. In addition, an OverPressure Valve (OPV) is installed downstream from the bleed valve to protect the system in case of overpressure.
The temperature of the engine bleed air is regulated to a maximum value. The hot bleed air goes through an air-to-air heat exchanger called the precooler. Fan discharge air modulated by the Fan Air Valve (FAV), blows across the precooler to maintain the temperature within limits. Each BMC monitors the system temperature and will shut down the engine bleed in case of excessive temperature.

APU BLEED/EXTERNAL AIR SUPPLY

The APU can also be used for bleed air supply. This is usually done on the ground for air conditioning and for engine start. However, APU bleed air may also be used in flight, depending on the altitude. The APU bleed supply is connected to the left side of the crossbleed duct. The crossbleed valve opens automatically to supply the right hand side when the APU bleed is supplying the system.
On the ground, an HP ground power unit can be connected to the left hand side pneumatic system. The right hand side may be supplied by opening the crossbleed valve. A crossbleed duct connects the left and right bleed systems. A crossbleed valve enables their interconnection or isolation.

G7508471 - G3NT1T0 - FM36B100000003

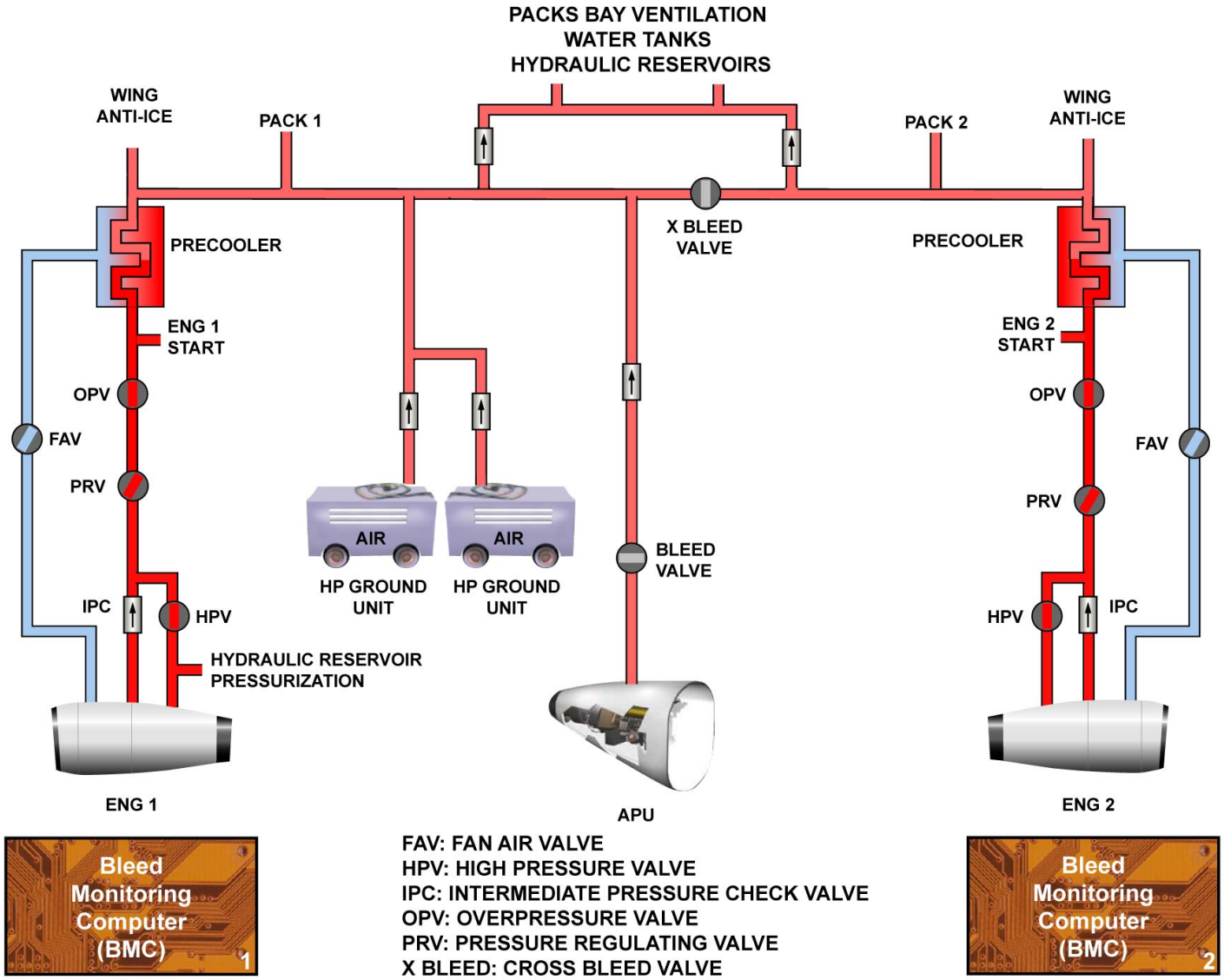

SYSTEM OVERVIEW - SOURCES AND USERS ... APU BLEED/EXTERNAL AIR SUPPLY

G7508471 - G3NT1T0 - FM36B100000003

PNEUMATIC LINE MAINTENANCE BRIEFING (RR700) (2)

SYSTEM OVERVIEW (continued)

LEAK DETECTION

Leak detection elements, connected in series, are installed along the hot air supply ducts of the pneumatic system and are monitored by the BMCs. A dual loop detection system is installed in the wings, the mid fuselage and in the air conditioning compartment to monitor the packs and bleed ducts. The APU supply duct is also monitored by a dual-loop system. The loops are made of multiple sensing elements connected in series. Two loops (A and B) are routed in parallel along the air ducts. The BMC uses "AND" logic to generate a leak warning and to prevent spurious warnings.
In each engine pylon, a single detection loop is monitored for leaks by the respective BMC.

G7508471 - G3NT1T0 - FM36B100000003

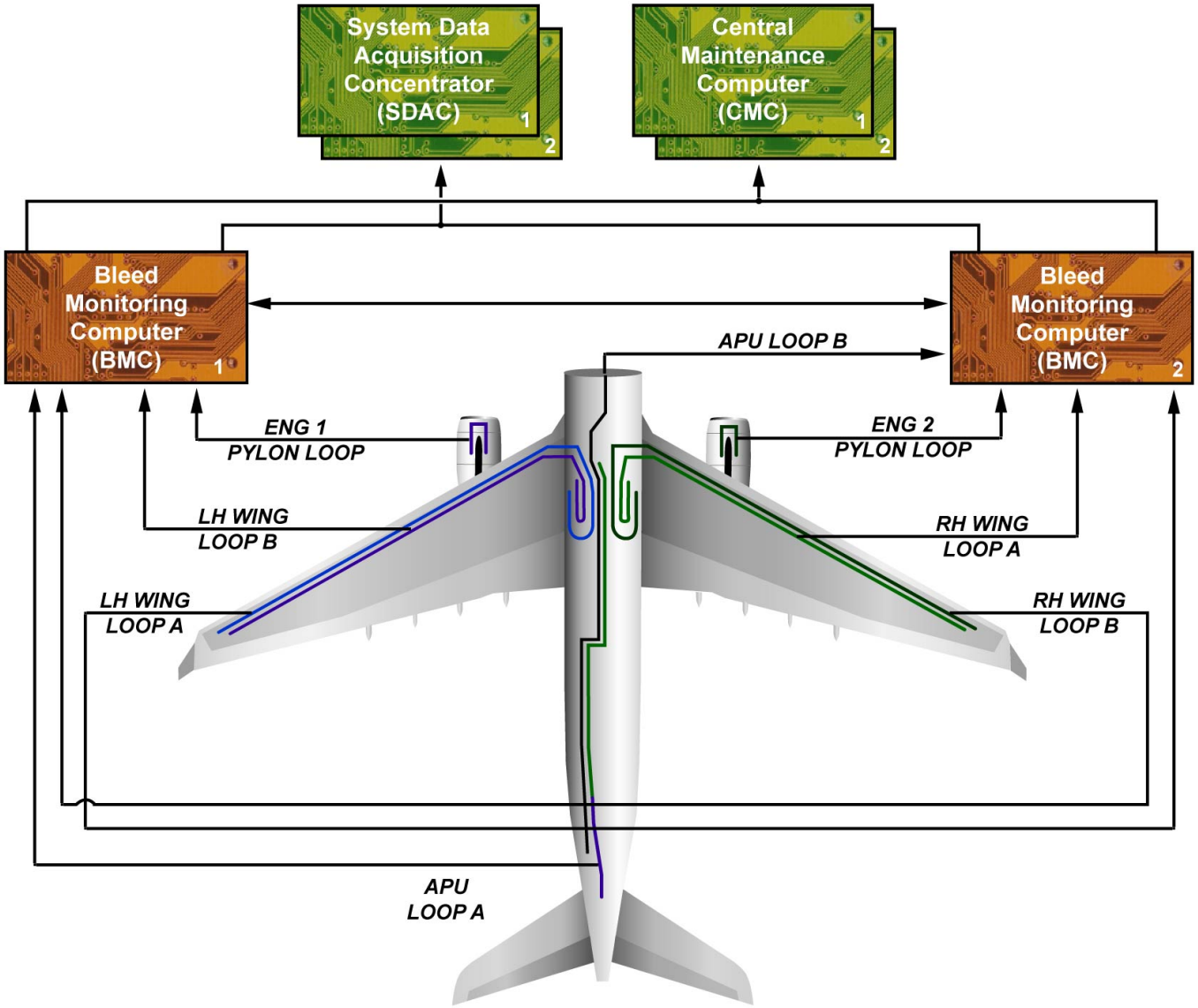

SYSTEM OVERVIEW - LEAK DETECTION

G7508471 - G3NT1T0 - FM36B1000000003

PNEUMATIC LINE MAINTENANCE BRIEFING (RR700) (2)

MEL/DEACTIVATION

The aircraft may be dispatched with one of the engine bleed valves PRV deactivated, referring to the MEL. The conditions for dispatch require the valve to be locked in the closed position and the related engine bleed system is inoperative.
Procedure to lock the valve closed:
- open the LH fan cowl
- make the thrust reverser unserviceable and open the LH thrust reverser cowl door
- on the PRV, remove the locking pin from its stowage
- on the manual override, make sure that the valve is in the CLOSED position and install the locking pin to secure the valve closed

The aircraft may also be dispatched with one of the engine HPV deactivated, referring to the MEL. The conditions for dispatch require the valve to be locked in the closed position. In addition, the related engine bleed system should not be used at low power setting.
Procedure to lock the valve closed:
- open the LH fan cowl,
- make the thrust reverser unserviceable and open the LH thrust reverser cowl door,
- on the HPV, remove the locking pin from its stowage,
- on the manual override, make sure that the valve is in the CLOSED position and install the locking pin to secure the valve closed.

G7508471 - G3NT1T0 - FM36B100000003

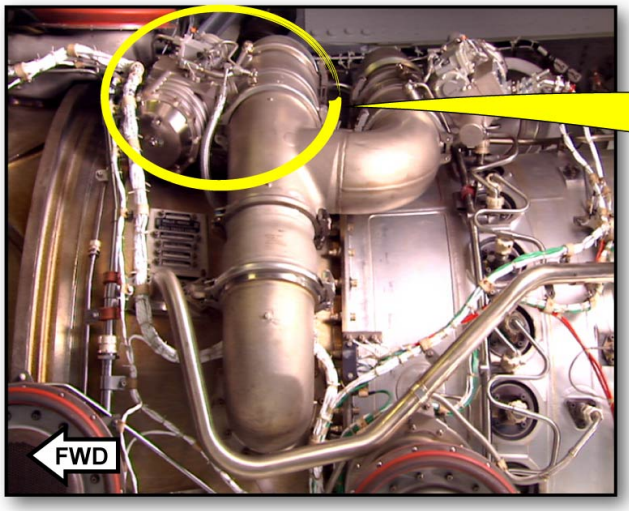

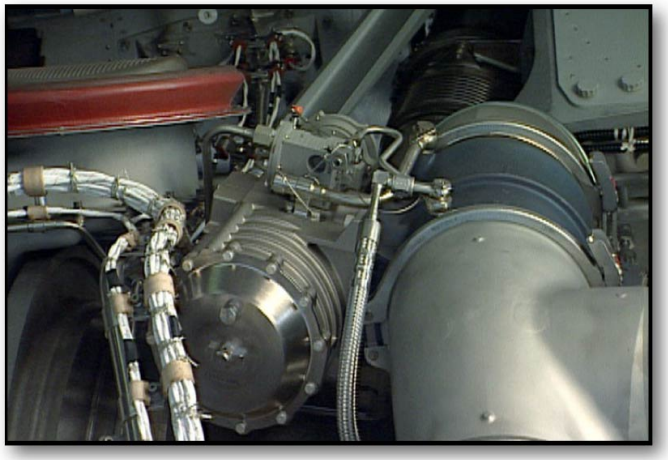

PRESSURE REGULATING VALVE (PRV)

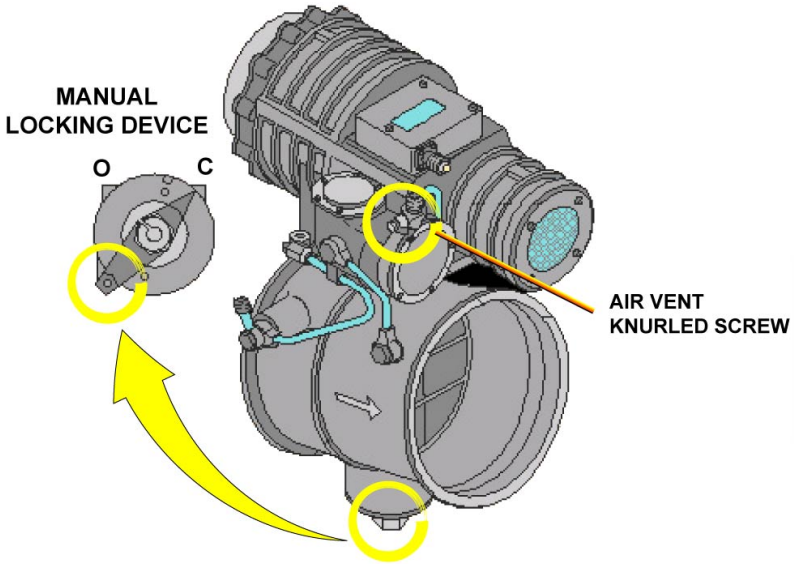

11-02 Bleed Valve	C	2	1	(m) One may be inoperative provided : 1) It is secured closed, and 2) The associated engine bleed air supply system is considered inoperative. Refer to 36-11-01

MEL

MEL/DEACTIVATION

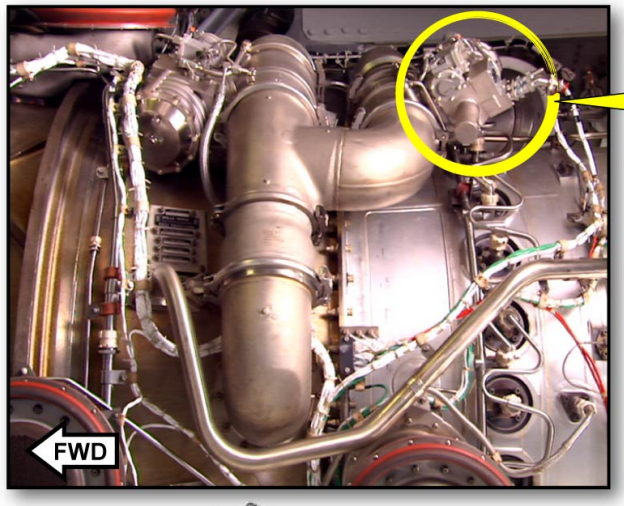

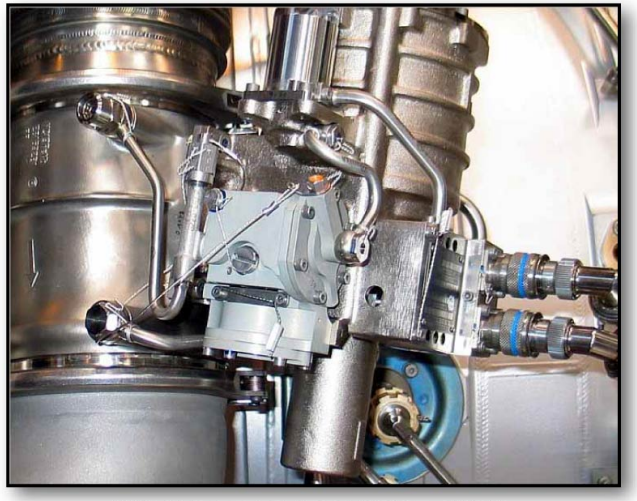

HIGH PRESSURE VALVE (HPV)

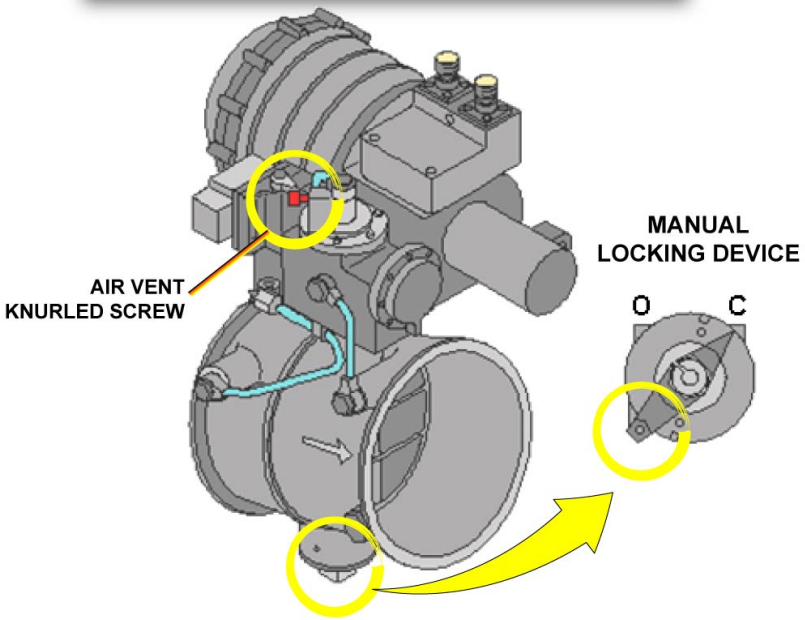

11-07 HP Valve	C	2	1		a) One may be inoperative in closed position provided the associated engine bleed air supply system is considered inoperative. Refer to 36-11-01
					- or -
	C	2	1	(o)(m)	b) One may be inoperative provided: 1) It is deactivated and secured in closed position, and 2) At low power setting the associated engine bleed air supply system is not used.

MEL

MEL/DEACTIVATION

This Page Intentionally Left Blank

G7508471 - G3NT1T0 - FM36B100000003

PNEUMATIC LINE MAINTENANCE BRIEFING (RR700) (2)

MAINTENANCE TIPS

Troubleshooting Note:
The condition of an overheat detection loop is checked by measurement of its Insulation Resistance (I/R), as detailed in the related TSM task 36-22-00-810-xxx):
- For the wings and APU loops, the I/R must be above 6 K
- For engines pylon loops, the I/R must be above 25 K

NOTE: I/R measurement must be done using an Alternate Current (AC) loop controller (Example: 9240SI). The use of Direct Current (DC) loop controller will impact the electrical characteristics of the sensing element.

A test set is available to help in troubleshooting of the pneumatic system. It is used to do an on-wing operational test of the HPV, PRV, FAV, OPV and pressure transducers.
If the ENG BLEED LEAK warning is displayed on the ECAM, there is the possibility of a high-pressure air leak on the engine pneumatic ducts. The leak may be found by using the (aluminum) foil-wrapping procedure to locate the source. This procedure is also used to check for leaks after installation of a bleed valve or a duct.
Procedure:
- wrap the foil around the joint one time,
- twist the seam of the foil wrap tight,
- secure the foil wrap on either side of the joint with lockwire,
- run the engine,
- after shutdown, check for any evidence of leaks.

NOTE: The leak may also be found by using the alternative procedure with the use of the dry developer.

The GND indication on the ECAM BLEED page sometimes causes confusion. It does not indicate that external pneumatic supply is connected or even that the access door is open. GND appears on the BLEED page when the aircraft is on the ground to indicate that the external pneumatic supply will be connected directly to the left hand side of the system. The only indication that external ground air is supplied is indication of system pressure on the left hand side. To make an engine start with ground air, the connection is located on the lower fuselage. The access door is on the belly fairing.
During a ground air start, the crossbleed valve must be manually operated. For safety, it is recommended to use the ground air supply to start the first engine. Then disconnect the ground air supply and make a crossbleed start for subsequent starts.
The installation of PTFE (Teflon) seals on the bleed air duct is done in two steps. First the installation of the filler ring inside the bleed duct groove and then the installation of the seal with its green face visible from outside.

NOTE: No lubricant has to be applied prior and/or during installation of PTFE seal.

NOTE:

I/R MEASUREMENT MUST BE DONE USING AC METER ONLY THE USE OF DC METER WILL IMPACT SENSING ELEMENTS ELECTRICAL CHARACTERISTICS.

Overheat Detection Loops Insulation Resistance (I/R) check:

Wings & APU Loops:
- **I/R must be > 6 KOhms**

Engines Pylon Loop:
- **I/R must be > 25 KOhms**

MAINTENANCE TIPS

BLEED TEST SET

TEST INTAKE

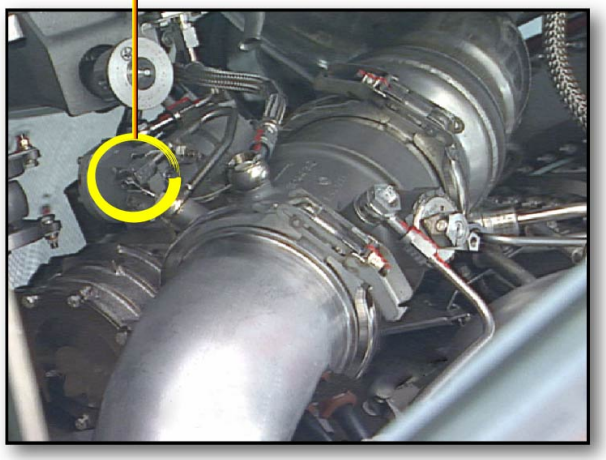

PRV (ON WING)
FUNCTIONAL TEST

MAINTENANCE TIPS

TWIST LOCKWIRE TO MAKE FOIL WRAP TIGHT ON DUCT AT BOTH ENDS

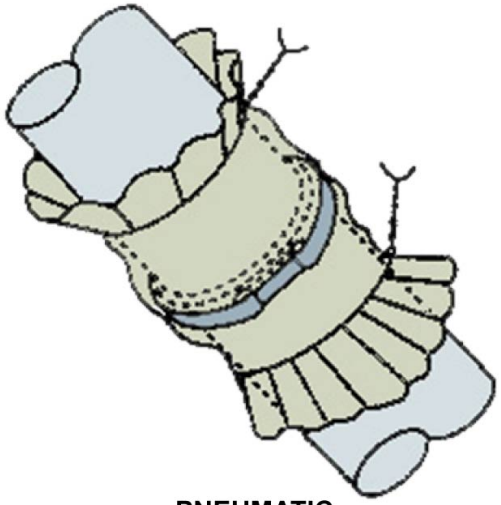

PNEUMATIC DUCT

ENGINE/WARNING DISPLAY (EWD)

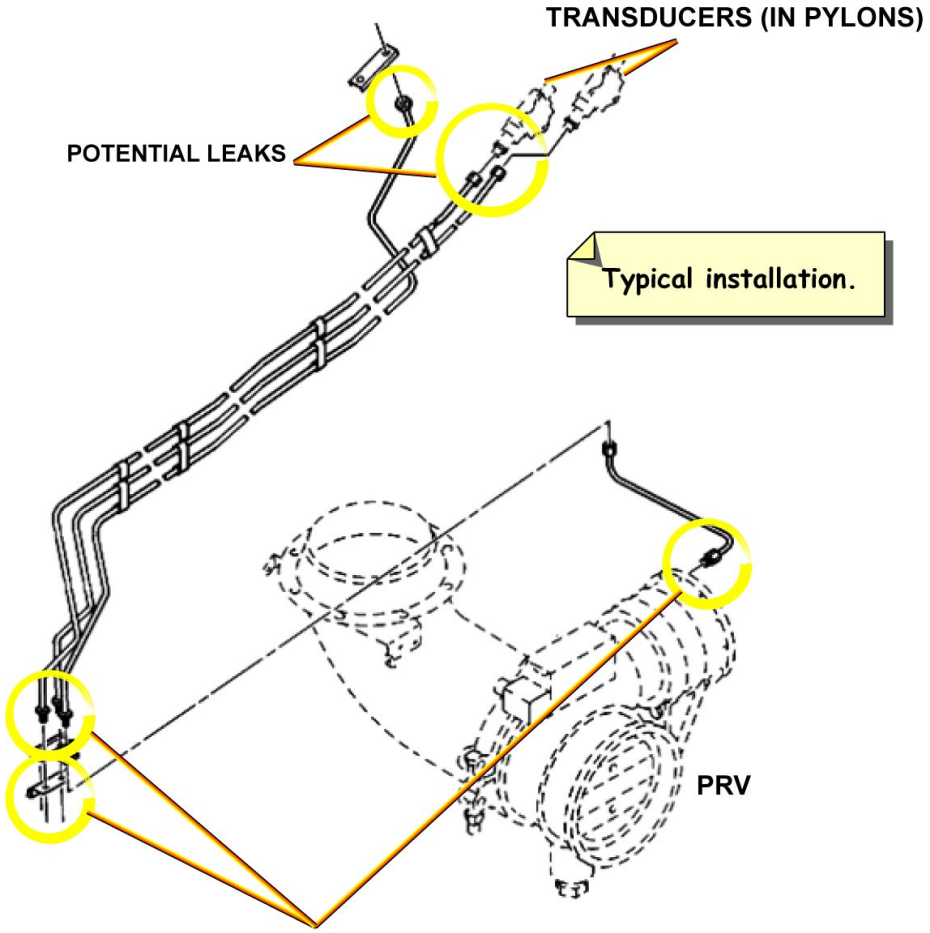

MAINTENANCE TIPS

G7508471 - G3NT1T0 - FM36B100000003

HP GROUND CONNECTORS

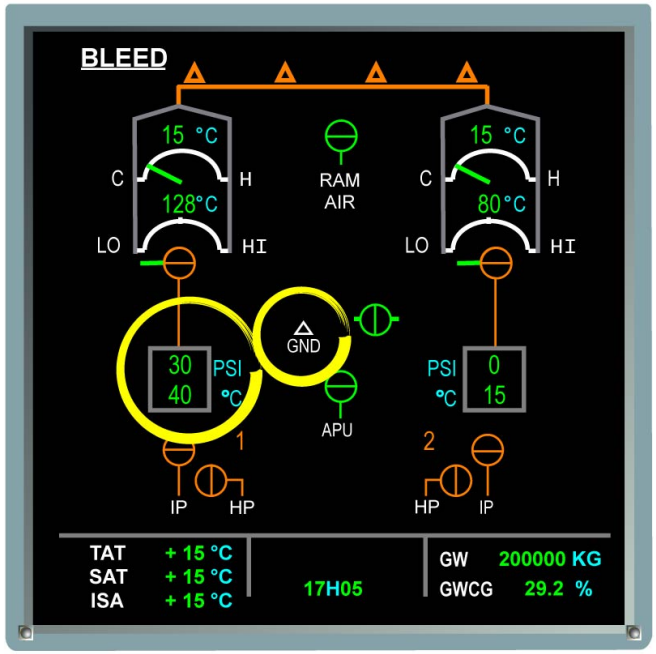

ECAM SYSTEM DISPLAY (SD)

MAINTENANCE TIPS

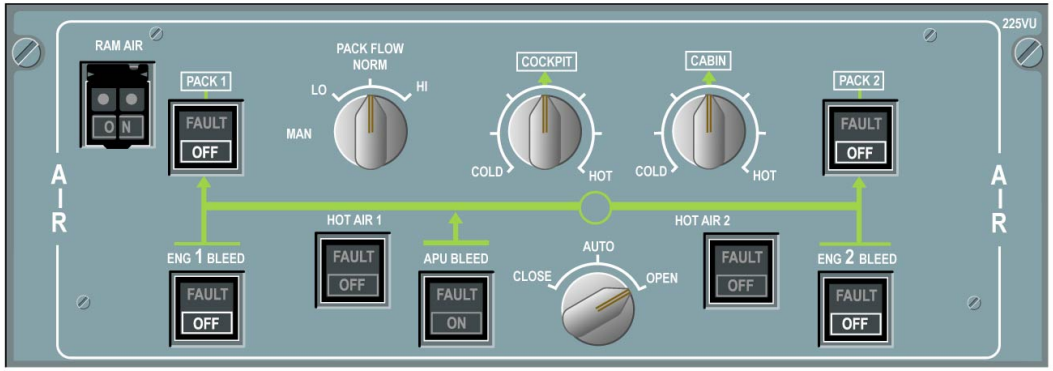

Preparation for ENGINE START with external pneumatic power.

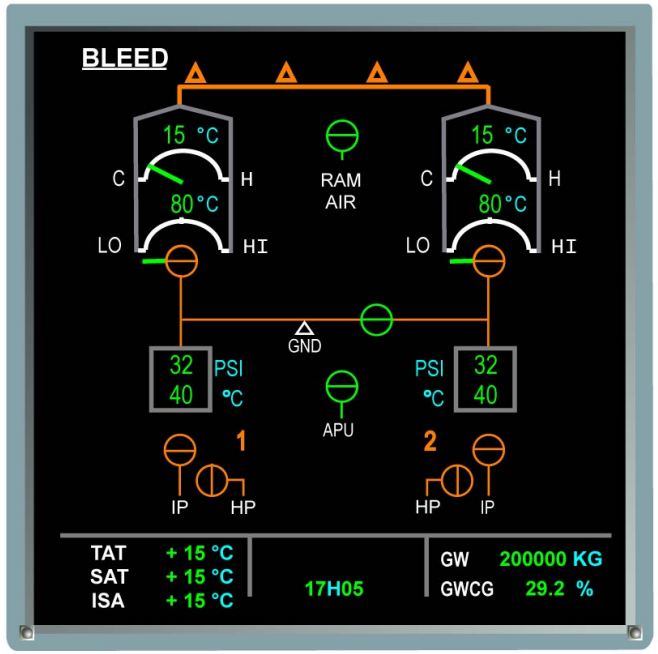

ECAM SYSTEM DISPLAY (SD)

MAINTENANCE TIPS

INSTALLATION OF THE FILLER RING

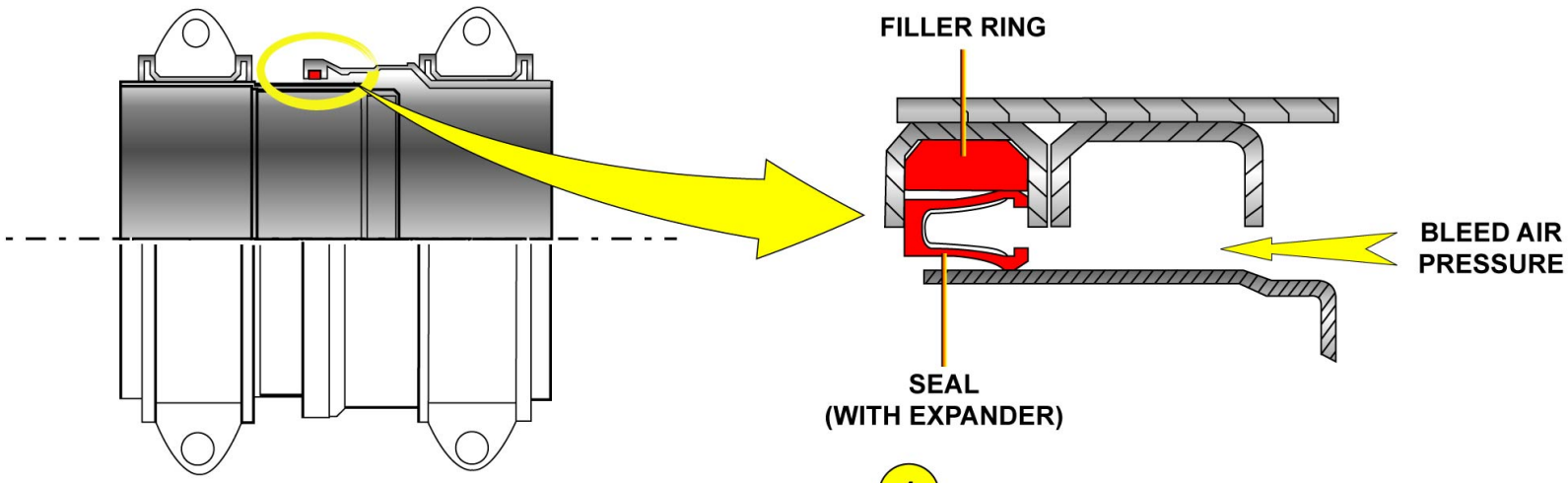

1

MAINTENANCE TIPS

INSTALLATION OF THE FILLER RING

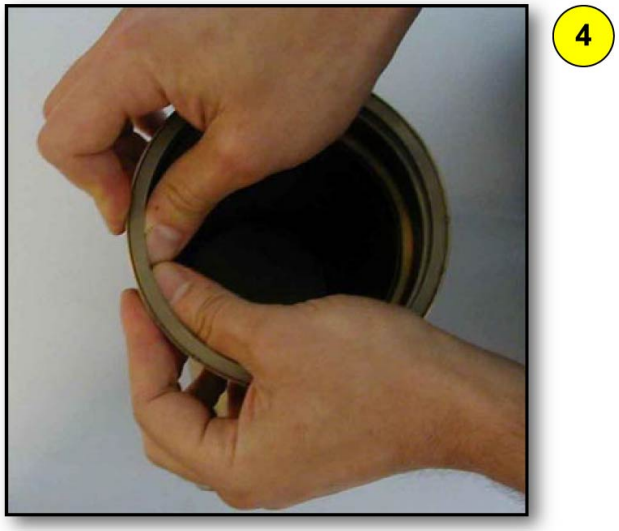

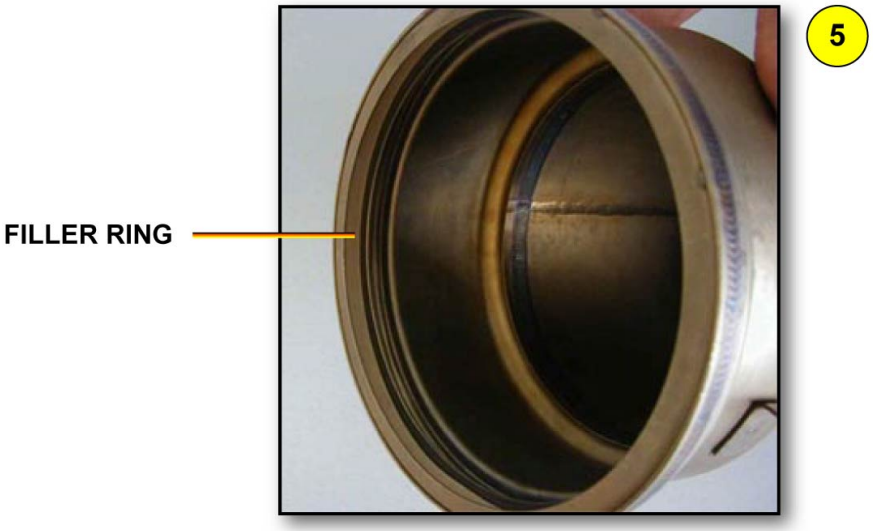

MAINTENANCE TIPS

INSTALLATION OF THE SEAL

MAINTENANCE TIPS

G7508471 - G3NT1T0 - FM36B100000003

INSTALLATION OF THE SEAL

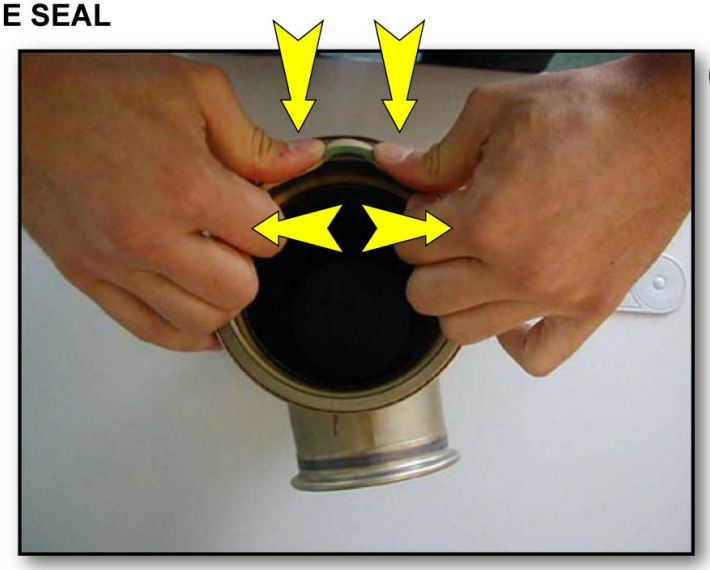

MAINTENANCE TIPS

G7508471 - G3NT1T0 - FM36B100000003

BLEED AIR DISTRIBUTION & SUPPLY D/O (RR700) (3)

GENERAL

The crossbleed valve connects or disconnects the LH and the RH pneumatic manifolds. High Pressure (HP) ground connectors can supply air to the LH pneumatic manifold and through the crossbleed valve to the RH pneumatic manifold when connected to a ground cart. The APU can supply air to the LH and RH pneumatic manifolds on ground and during climb up to 23000 feet (7010 meters) and during the descent from 21000 feet (6400 meters). The engine bleed air systems are connected to the corresponding pneumatic manifold.

G7508471 - G3NT1T0 - FM36D1000000003

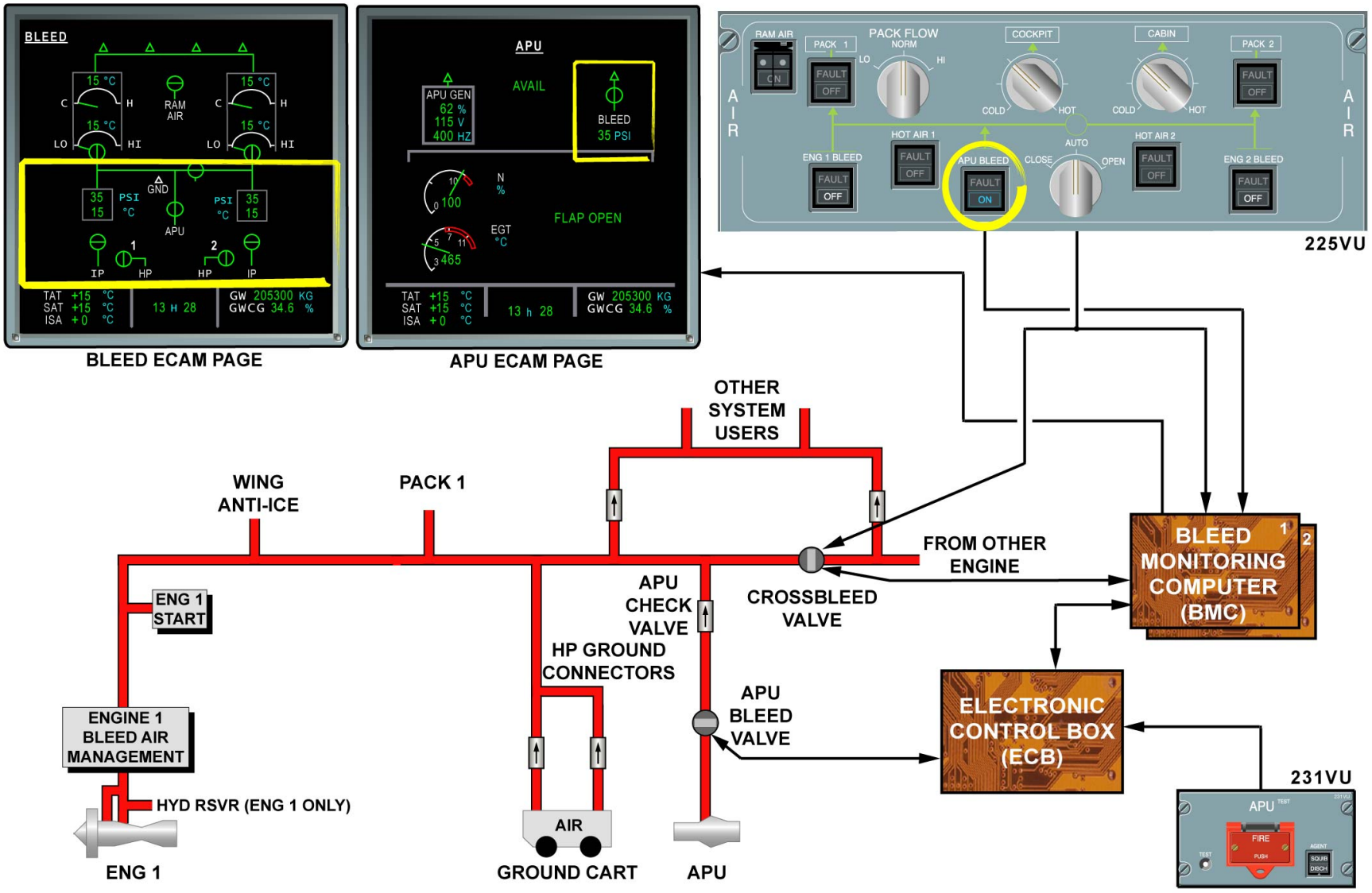

GENERAL

G7508471 - G3NT1T0 - FM36D100000003

BLEED AIR DISTRIBUTION & SUPPLY D/O (RR700) (3)

HP AIR GROUND SUPPLY

The ground air source supplies air through the two HP ground connectors installed at the bottom left of the belly fairing. Each connector contains a non-return valve and a built-in nipple. A short duct connects the HP ground connectors to the crossbleed manifold, to the left of the crossbleed valve. Once connected and switched ON, ground cart delivered pressure can be checked on the ECAM BLEED page. This pressure indication is given through the engine bleed system.

CAUTION: all A/C bleed systems must be switched off before the crossbleed manifold is pressurized by the ground cart.

G7508471 - G3NT1T0 - FM36D1000000003

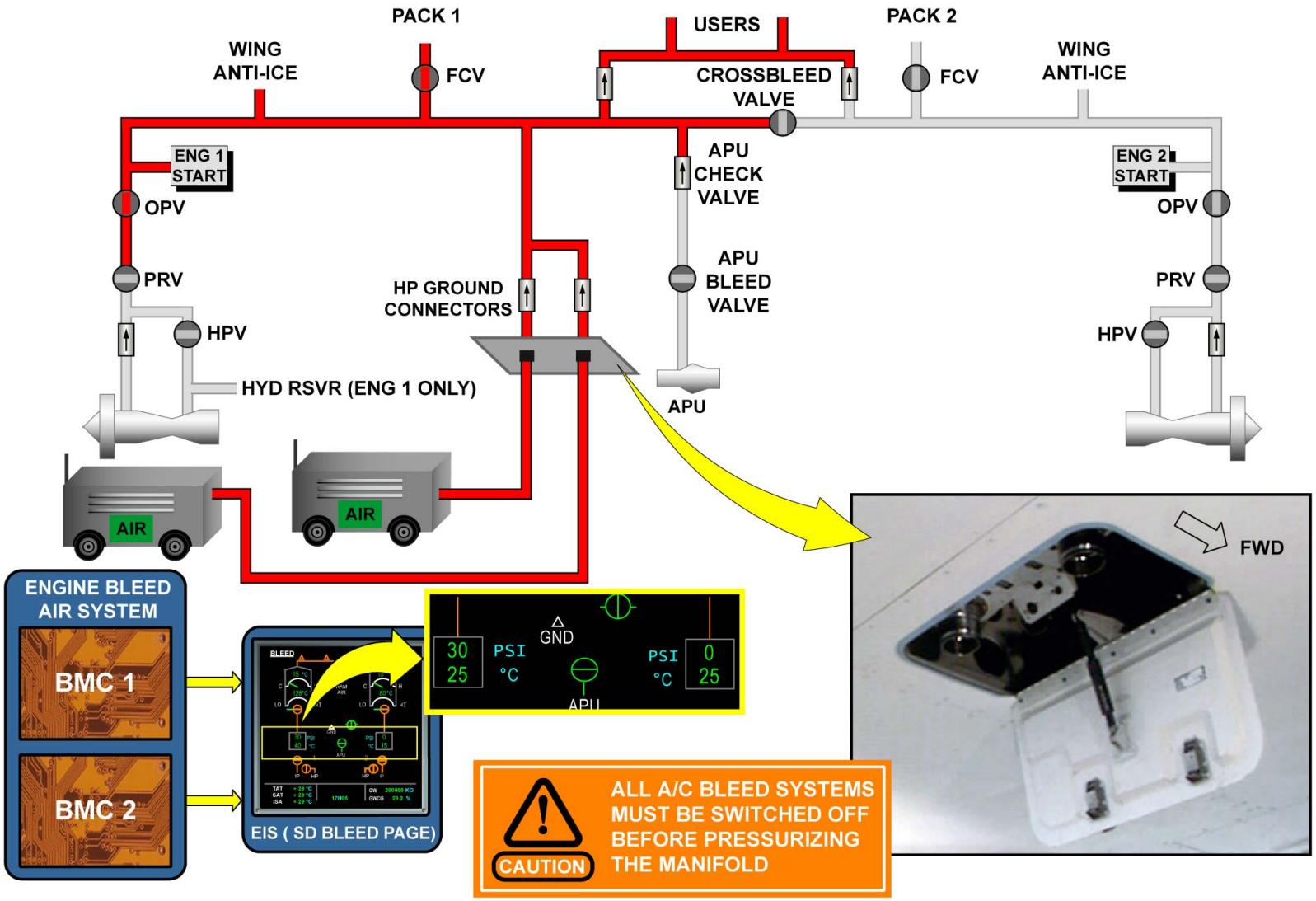

HP AIR GROUND SUPPLY

BLEED AIR DISTRIBUTION & SUPPLY D/O (RR700) (3)

APU BLEED AIR SUPPLY

The main components of the APU bleed system are the APU bleed valve and the APU check valve.

APU BLEED AND CHECK VALVES

The APU bleed valve is an ON/OFF butterfly valve, spring loaded closed, with a visual position indicator installed. It is electrically controlled by a solenoid and pneumatically operated. Its muscle pressure is tapped upstream of the valve. A Fully Closed (FC)/NOT FC micro switch is installed on the valve for indicating and monitoring purposes. The check valve protects the APU from reverse flow when another source supplies bleed air at a higher pressure.

APU BLEED VALVE CONTROL

Once the APU BLEED P/B is set to ON, a ground signal is sent to both Bleed Monitoring Computers (BMCs). Then, the BMCs send an opening command to the Electronic Control Box (ECB) if the following conditions are met:
- the APU master switch is ON,
- the APU BLEED P/B is ON,
- no leak is detected on the APU bleed duct,
- and no leak is detected on the LH pneumatic manifold.

Note that these two leak conditions are not active during Main Engine Start (MES).
Once the ECB receives the opening command, it energizes the bleed valve solenoid only if:
- the APU runs at more than 95% of speed,
- no APU shutdown is carried out,
- and the altitude is lower than 23000 feet (7010 meters)during climb or 21000 feet (6400meters) during descent.

As a consequence, the APU bleed valve opens, the Pressure Regulating Valves (PRVs) of the two engines automatically close and the crossbleed valve automatically opens when the APU supplies bleed air to the users. APU bleed valve position and bleed pressure are indicated on the ECAM BLEED page (the pressure value is given by the engine bleed system).

G7508471 - G3NT1T0 - FM36D100000003

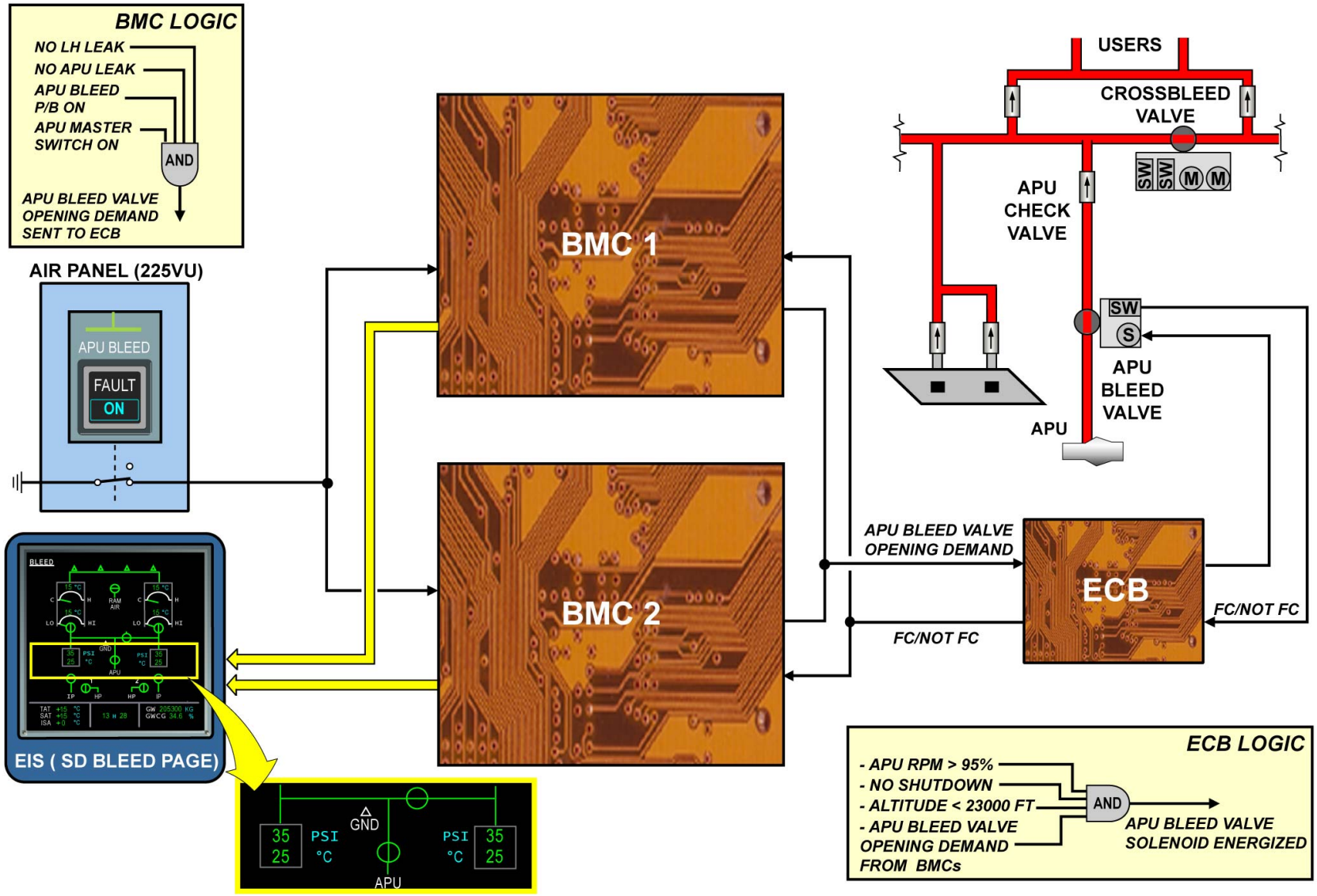

APU BLEED AIR SUPPLY - APU BLEED AND CHECK VALVES & APU BLEED VALVE CONTROL

G7508471 - G3NT1T0 - FM36D100000003

BLEED AIR DISTRIBUTION & SUPPLY D/O (RR700) (3)

CROSSBLEED SYSTEM

The crossbleed valve is an electrically controlled butterfly shut-off valve. Two electrical motors, which work independently, are used for manual or automatic operation. A Fully Open (FO) or Fully Close (FC) position of the valve is sent to the two BMCs by 2 micro switches. Either automatic or manual control can be selected using the crossbleed valve selector of the AIR panel.

AUTOMATIC CONTROL

When the crossbleed valve selector is in the AUTO position, the crossbleed valve control is carried out by the BMCs, through the primary valve motor. As soon as:
- the APU BLEED P/B is ON,
- the APU bleed valve is not FC,
- and there is no leak detected,

the BMCs send a ground signal to the crossbleed valve auto-control relay.
As a consequence, the crossbleed valve auto-control relay supplies electrical power to the crossbleed valve primary motor and the crossbleed valve opens. The FO position feedback from the microswitch is indicated on the ECAM BLEED page through the BMCs. When the APU BLEED is deselected, the APU bleed valve closes and, in turn, the crossbleed valve closes.
The FC feedback from the second microswitch is displayed on the BLEED page.

MANUAL CONTROL

The manual opening control can be used in the subsequent cases:
- cross supply by a ground cart,
- crossbleed engine start,
- or when an engine bleed system fails.

As soon as a manual control is selected, the crossbleed valve primary motor power supply is cut out. When the crossbleed valve selector switch is set to OPEN, it directly supplies the secondary crossbleed valve motor, which opens the valve. When the crossbleed valve selector switch is set to CLOSE, the secondary motor closes the crossbleed valve. As in the automatic mode, the valve position is given by the 2 microswitches and shown on the ECAM BLEED page.

INCORRECT OPERATION

If a disagreement between the valve position and command occurs, the BMCs trigger an ECAM message and the BLEED page comes up automatically.

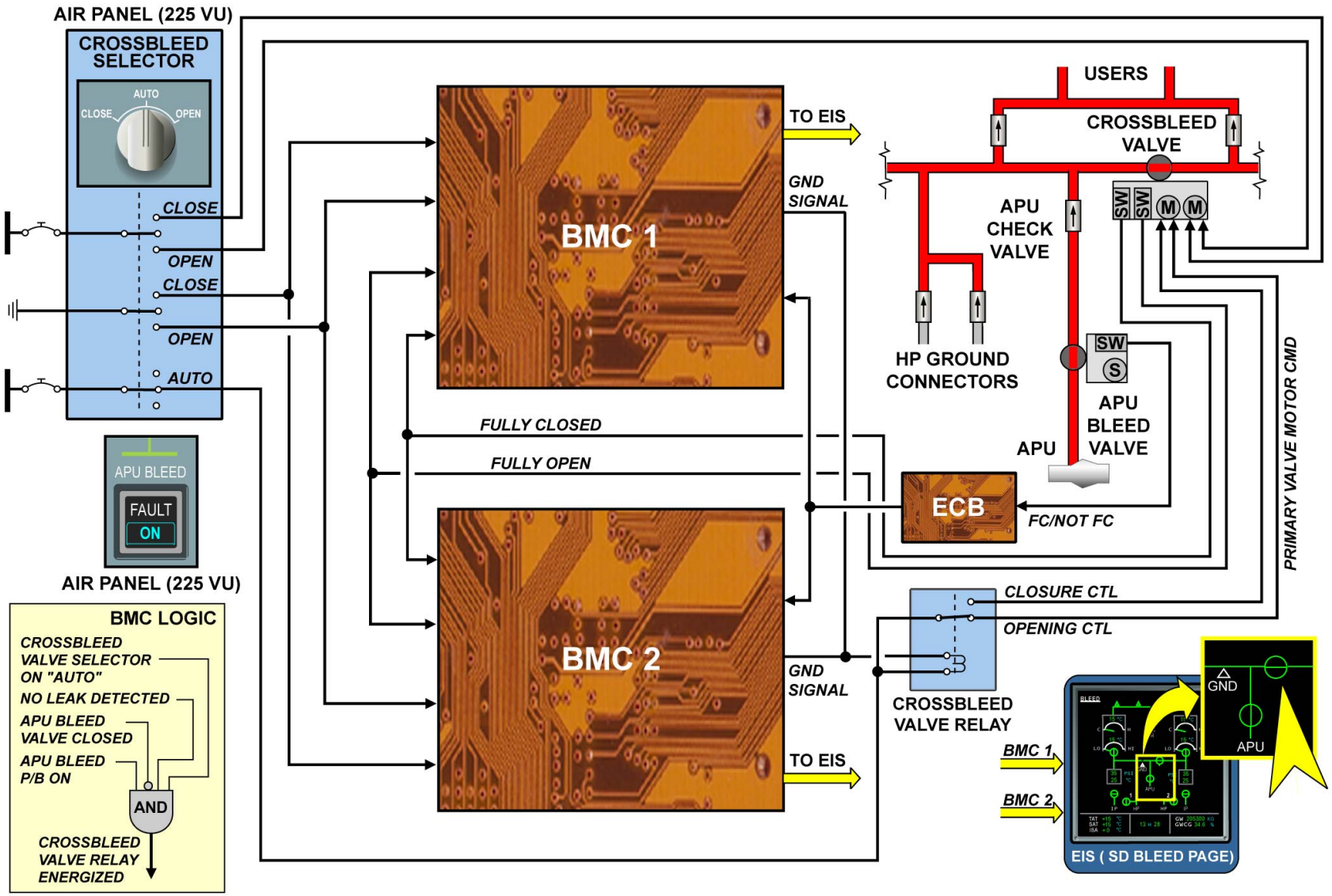

CROSSBLEED SYSTEM - AUTOMATIC CONTROL ... INCORRECT OPERATION

G7508471 - G3NT1T0 - FM36D100000003

ENGINE BLEED AIR MANAGMNT SYS GEN. D/O (RR) (3)

GENERAL

The main air bleed sources are the engines. Air can be bled from two different stages. It is generally bled from an Intermediate Pressure (IP) stage of the IP compressor stage 8 to minimize fuel penalty. When pressure from the IP bleed port is insufficient to supply the network, air is automatically bled from the High Pressure (HP) compressor stage 6.
Each engine bleed air system includes the following sub-system:
- pneumatic transfer system. It selects one of the two compressor of the engine IP or HP compressor in agreement with the supplied pressure,
- pressure limitation system to regulate the bleed air pressure in order to prevent overpressure,
- temperature limitation system to regulate the bleed air temperature in order to prevent over temperature.

G7508471 - G3NT1T0 - FM36D600000003

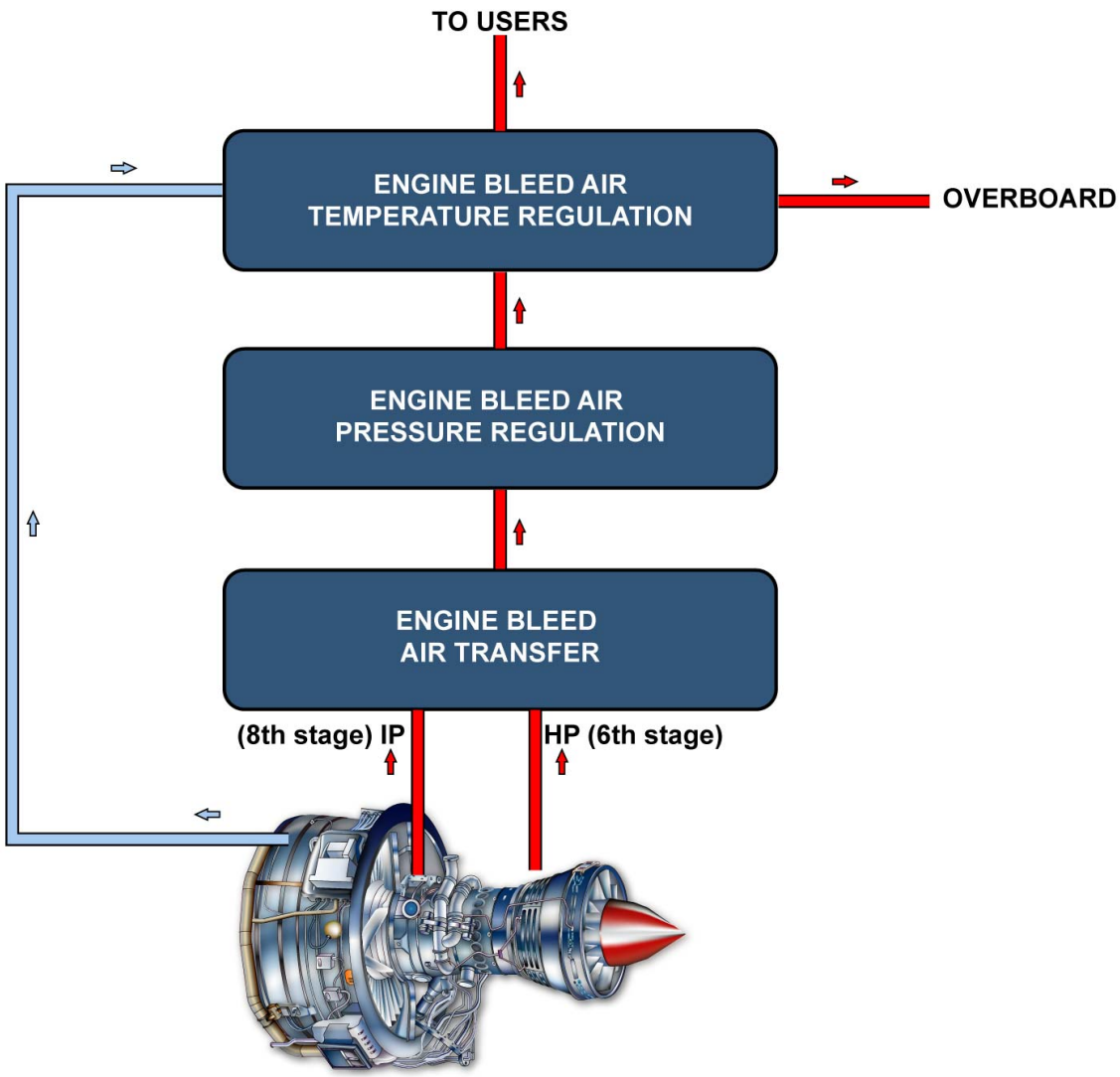

GENERAL

G7508471 - G3NT1T0 - FM36D600000003

ENGINE BLEED AIR MANAGMNT SYS GEN. D/O (RR) (3)

BLEED AIR TRANSFER

The transfer from one bleed port to another is carried out using a HP bleed Valve (HPV) at the HP stage. The transfer depends on the available pressure and engine speeds. In the normal engine bleed air configuration, the air is bled from the IP port at high engine speed. At low engine speed, especially during A/C descent with engines at idle, the IP port pressure is insufficient and the air is automatically bled from the HP port.
Transfer to the IP stage can be forced by closing the HPV via a solenoid incorporated in the HPV. This transfer is commanded by the Electronic Engine Controller (EEC) of the related engine. The HPV can also be closed by action on the engine BLEED P/Bs
A check valve located on the IP bleed port avoids reverse flow when air is bled from the HP stage.

PRESSURE LIMITATION

Air is then sent through the engine bleed air pressure regulation system first composed of a Pressure Regulating Valve (PRV) associated to a thermostat solenoid. The valve acts as a shut-off and PRV. The PRV is fully and pneumatically operated and controlled by the thermostat solenoid. The shut-off function of the PRV through the thermostat solenoid is controlled by the corresponding BMC or by using the ENG BLEED P/Bs located on the AIR panel or the engine FIRE P/B.
A fully pneumatic Overpressure Valve (OPV) protects the system against overpressure.

TEMPERATURE LIMITATION

The temperature regulation of the bleed air system is carried out by a Fan Air Valve (FAV), which modulates fan airflow through an air-to-air heat exchanger. The FAV is controlled by the BMC through the Control Thermostat (ThC). The temperature regulation gives two temperature settings: 200°C for nominal conditions (solenoid not energized) and 150°C on demand from the air conditioning system if the wing anti-ice system is not operative (solenoid energized).
Finally, bleed air is ducted to the bleed air distribution and supply network.

MONITORING

The position of the valves, bleed air temperature and pressure are indicated on the ECAM bleed page.

G7508471 - G3NT1T0 - FM36D600000003

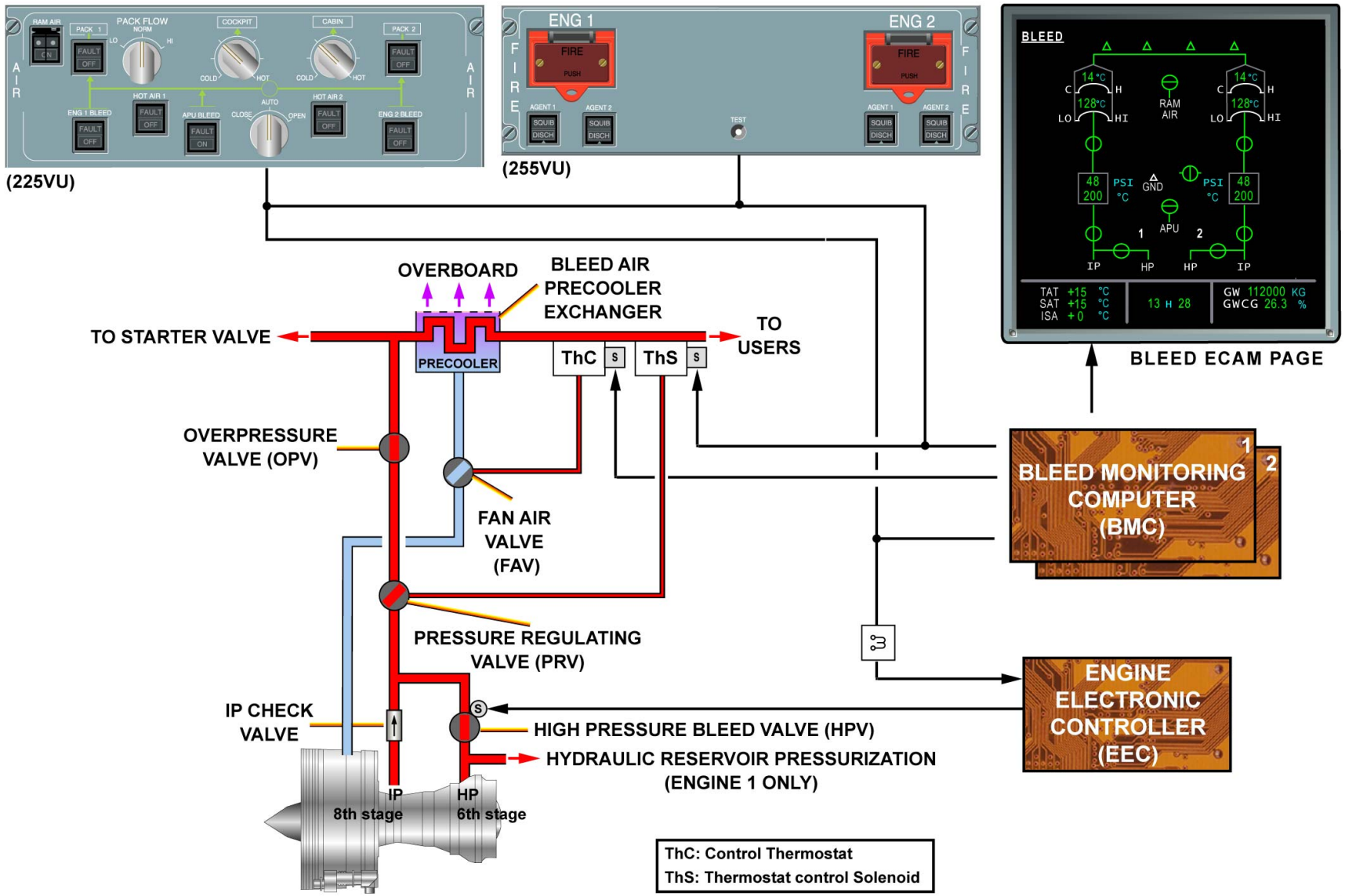

BLEED AIR TRANSFER ... MONITORING

ENGINE BLEED AIR TRANSFER SYSTEM D/O (3)

DESCRIPTION

The selection of the High Pressure (HP) compressor stage source on each engine is carried out through a HP bleed Valve (HPV) and an Intermediate Pressure (IP) check valve.

HIGH PRESSURE BLEED VALVE

The HPV is pneumatically operated for pressure limitation and safety. It is a spring-loaded closed shut-off valve. The HPV is electrically controlled to close by a double coil solenoid.
The minimum operating pressure of the valve is 12 psi and it pneumatically regulates the pressure around 40 psi.
It has a Fully Closed (FC)/NOT FC microswitch for monitoring and indicating.
For maintenance purposes, the HPV has a ground test port, a mechanical position indicator and a threaded hole which lets the butterfly locked in the closed position.

IP CHECK VALVE

The IP check valve is a non-return valve which closes automatically to prevent HP air from re-circulating toward the IP stage when the HPV is open.

BLEED TRANSFERRED PRESSURE TRANSDUCER

The bleed transferred pressure transducer is installed on a bracket in the engine pylon. Its pressure sense line tapping is taken downstream of the HPV.

G7508471 - G3NT1T0 - FM36D200000005

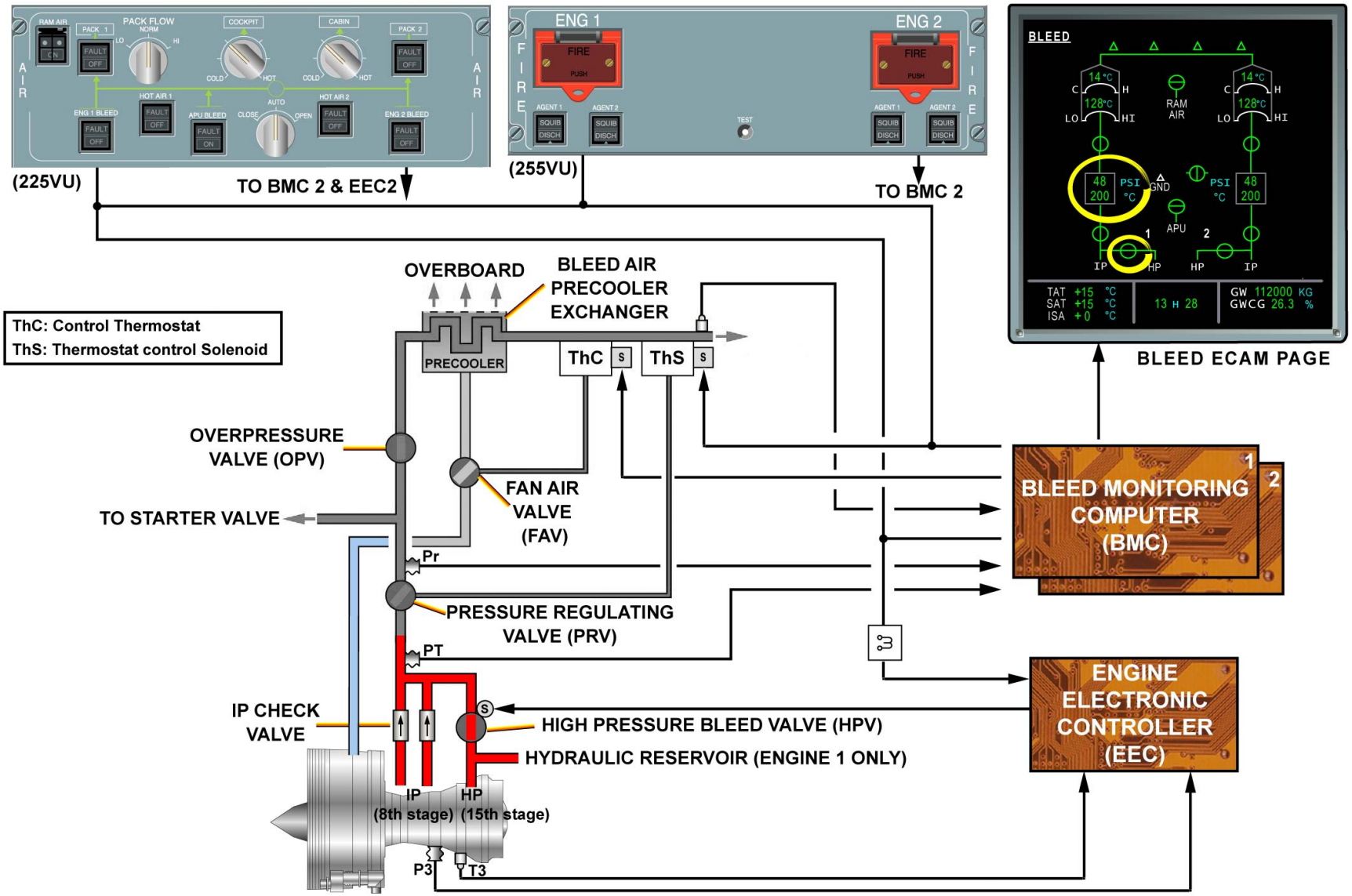

DESCRIPTION - HIGH PRESSURE BLEED VALVE ... BLEED TRANSFERRED PRESSURE TRANSDUCER

ENGINE BLEED AIR TRANSFER SYSTEM D/O (3)

DESCRIPTION (continued)

PRESSURE TRANSFER SYSTEM

It enables selection of HP compressor stage air is bled from. It includes two mains components: HP valve and IPC valves.
Air is bled by the IPC or HPV depending on the available pressure and engine speeds as follows:
- Normal configuration, at high engine speed air is bled from the IP 8th stage through the IPC valves.
- When engines at idle or during descent, at low engine speed, the IP pressure is insufficient. Air is automatically bled from the HP 15th stage through the HP valve. The downstream pressure causes the IPC valves to close.

Closing signal from:
- EEC (engine parameters)
- BMC (bleed systems data) through relay
- ENG BLEED P/B through relay

G7508471 - G3NT1T0 - FM36D200000005

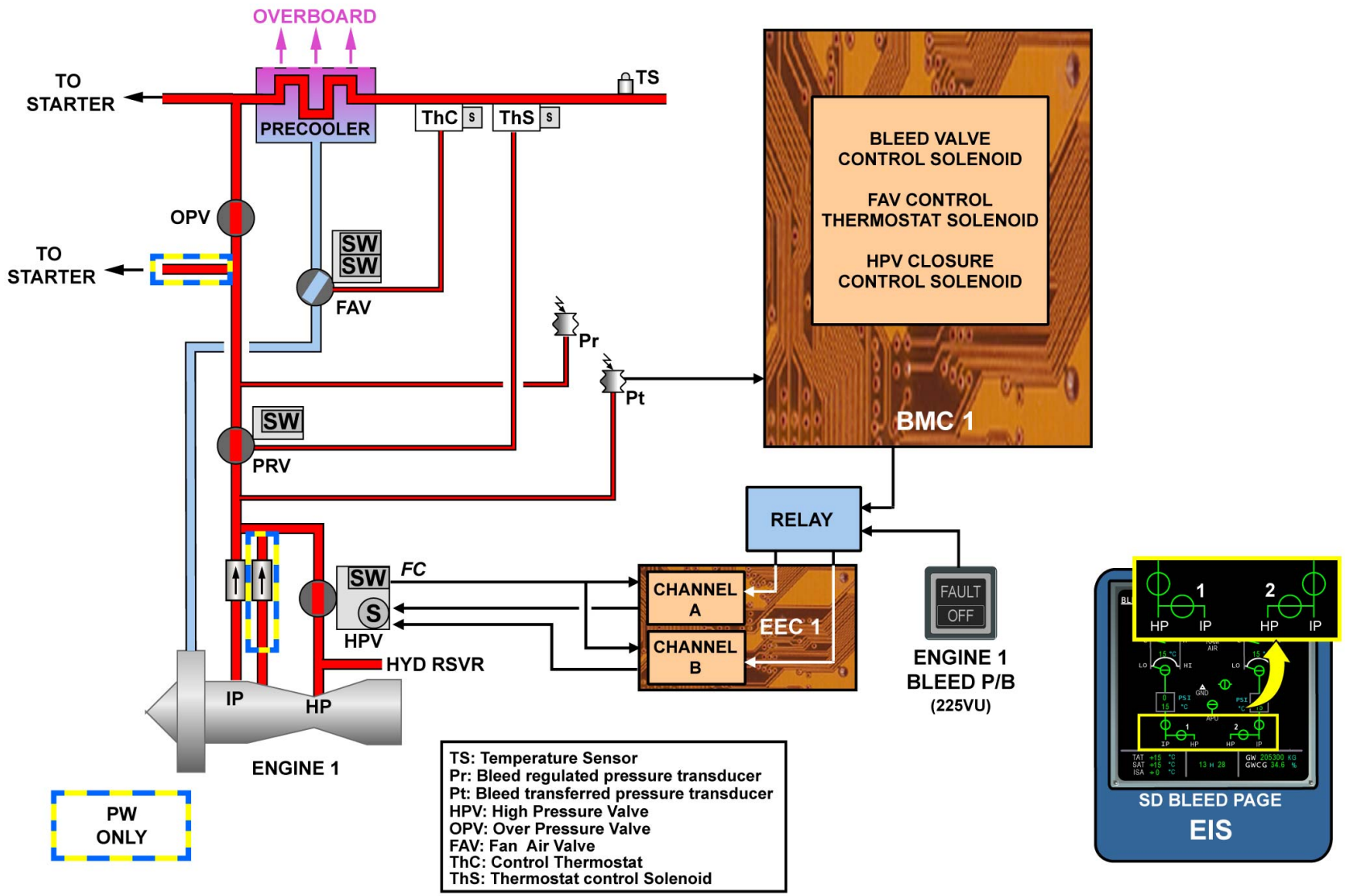

DESCRIPTION - PRESSURE TRANSFER SYSTEM

G7508471 - G3NT1T0 - FM36D200000005

ENGINE BLEED AIR TRANSFER SYSTEM D/O (3)

NORMAL OPERATION

The IP/HP bleed transfer control is pneumatically achieved. When the IP stage pressure exceeds the HPV target value of an average of 40 psi, the HPV closes and air bleed is supplied by the IP stage.
The HPV is electrically controlled close by solenoid energization by the Engine Electronic Controller (EEC) following:
- an internal logic,
- a Bleed Monitoring Computer (BMC) demand via a relay,
- by action on the ENG BLEED P/B via a relay.

The HPV position is shown on the SD BLEED page.

G7508471 - G3NT1T0 - FM36D200000005

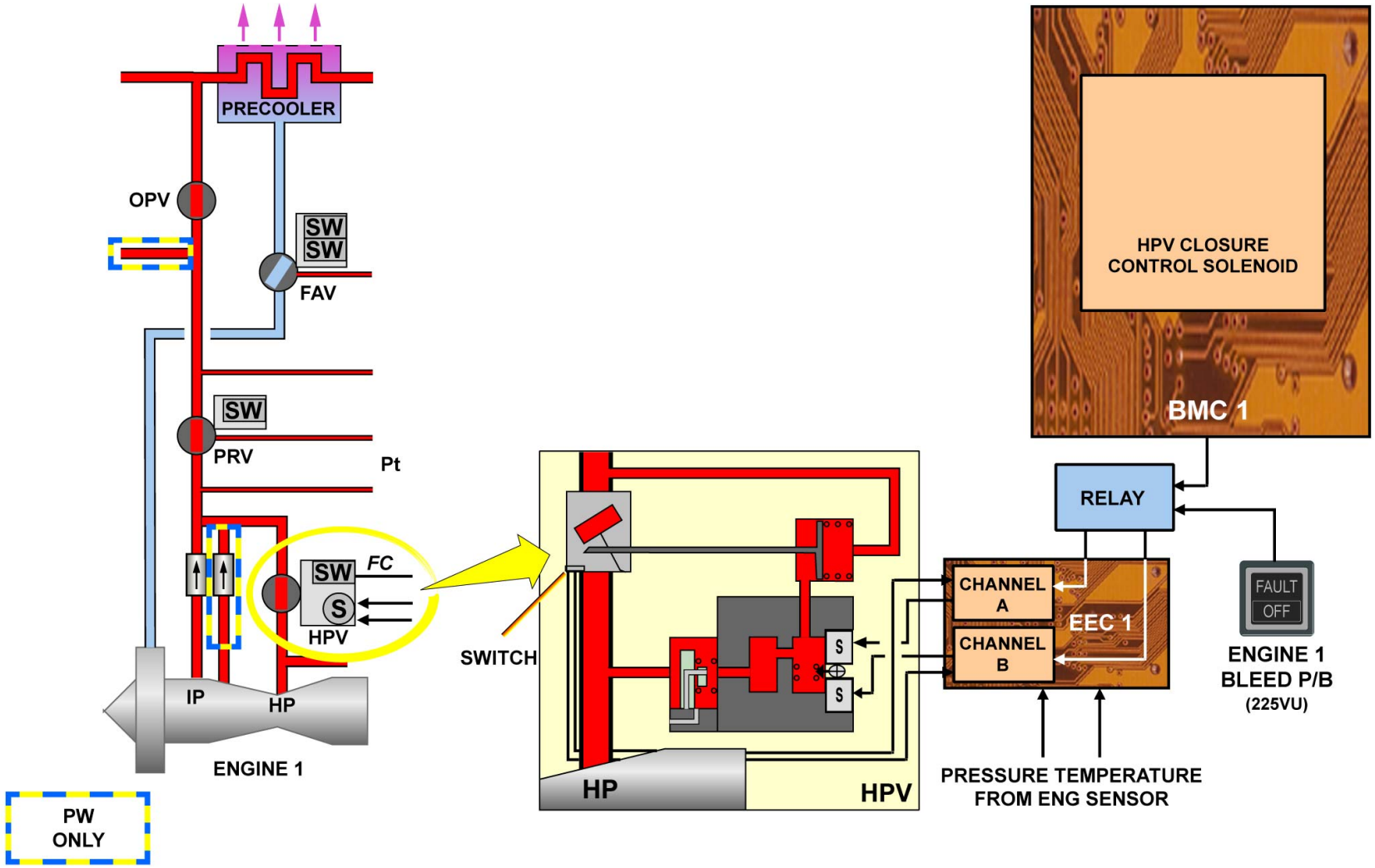

NORMAL OPERATION

G7508471 - G3NT1T0 - FM36D200000005

ENGINE BLEED AIR TRANSFER SYSTEM D/O (3)

ABNORMAL HIGH PRESSURE BLEED VALVE CLOSURE

An abnormal BMC closure function is used for system protection purposes or during specific operations. The BMC sends a HPV closing command to the EEC via a relay. This HPV closing command is sent any time the Pressure Regulating Valve (PRV) is commanded closed.
The HPV also closes when the HP pressure is higher than 85 psi, the Wing Anti Ice (WAI) is not selected and the altitude is higher than 26000 feet (7925 meters), or when the compressor exit temperature is higher than 430 degrees Celsius and the HP pressure higher than 75 psi.
If the IP/HP transfer fails, the HPV pneumatically closes when the upstream pressure is higher than 185 psi.

VALVE POSITION DISAGREEMENT

When the HPV is controlled open and is detected in the closed position, the BMC triggers an ECAM message and the BLEED page comes up automatically.

G7508471 - G3NT1T0 - FM36D200000005

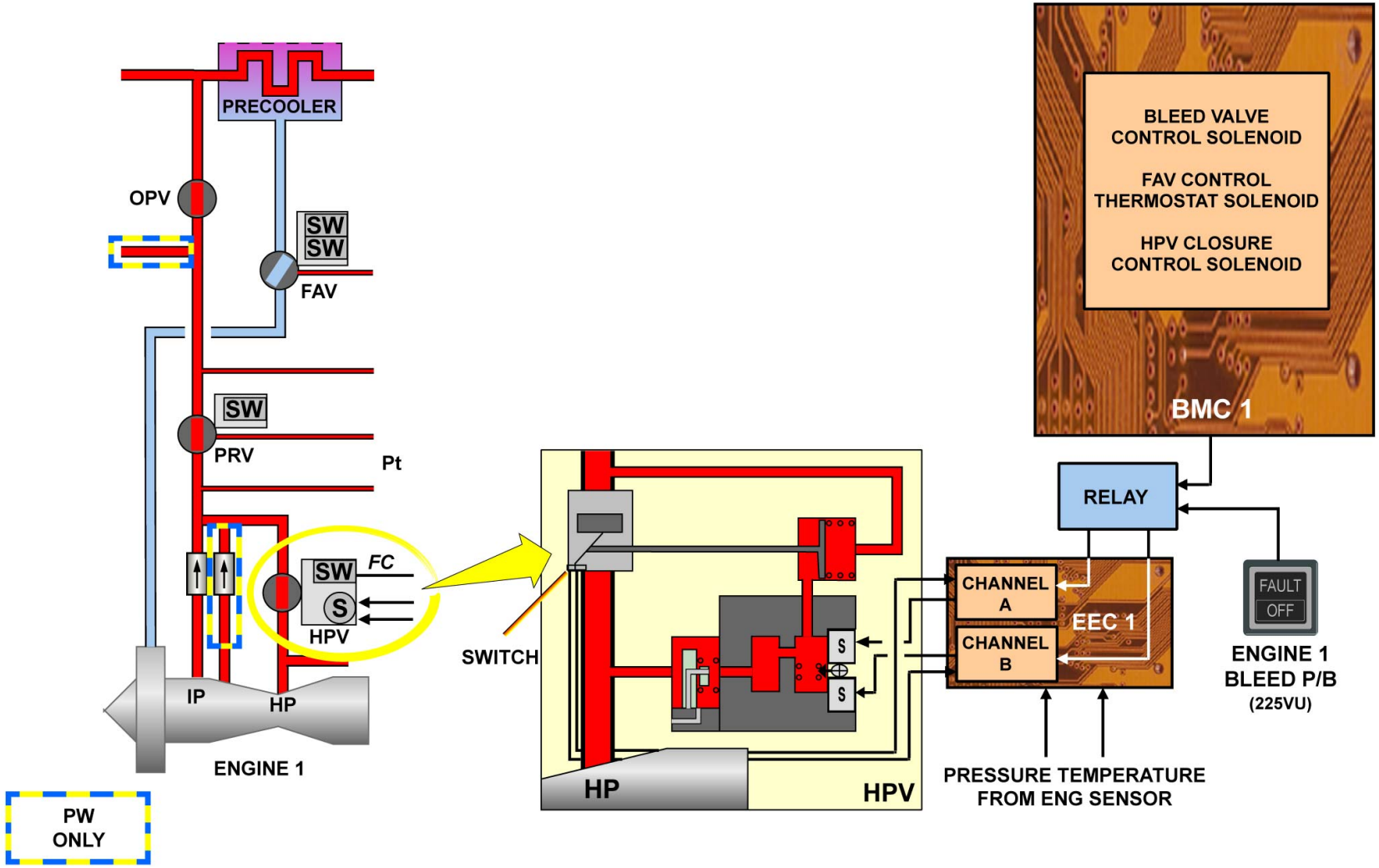

ABNORMAL HIGH PRESSURE BLEED VALVE CLOSURE & VALVE POSITION DISAGREEMENT

G7508471 - G3NT1T0 - FM36D200000005

ENGINE BLEED AIR TRANSFER SYSTEM D/O (3)

MONITORING

The bleed transferred pressure transducer is used for system monitoring and fault isolation regarding the PRV and HPV. An associated fault message is sent to the Central Maintenance System (CMS) for maintenance purposes.

G7508471 - G3NT1T0 - FM36D200000005

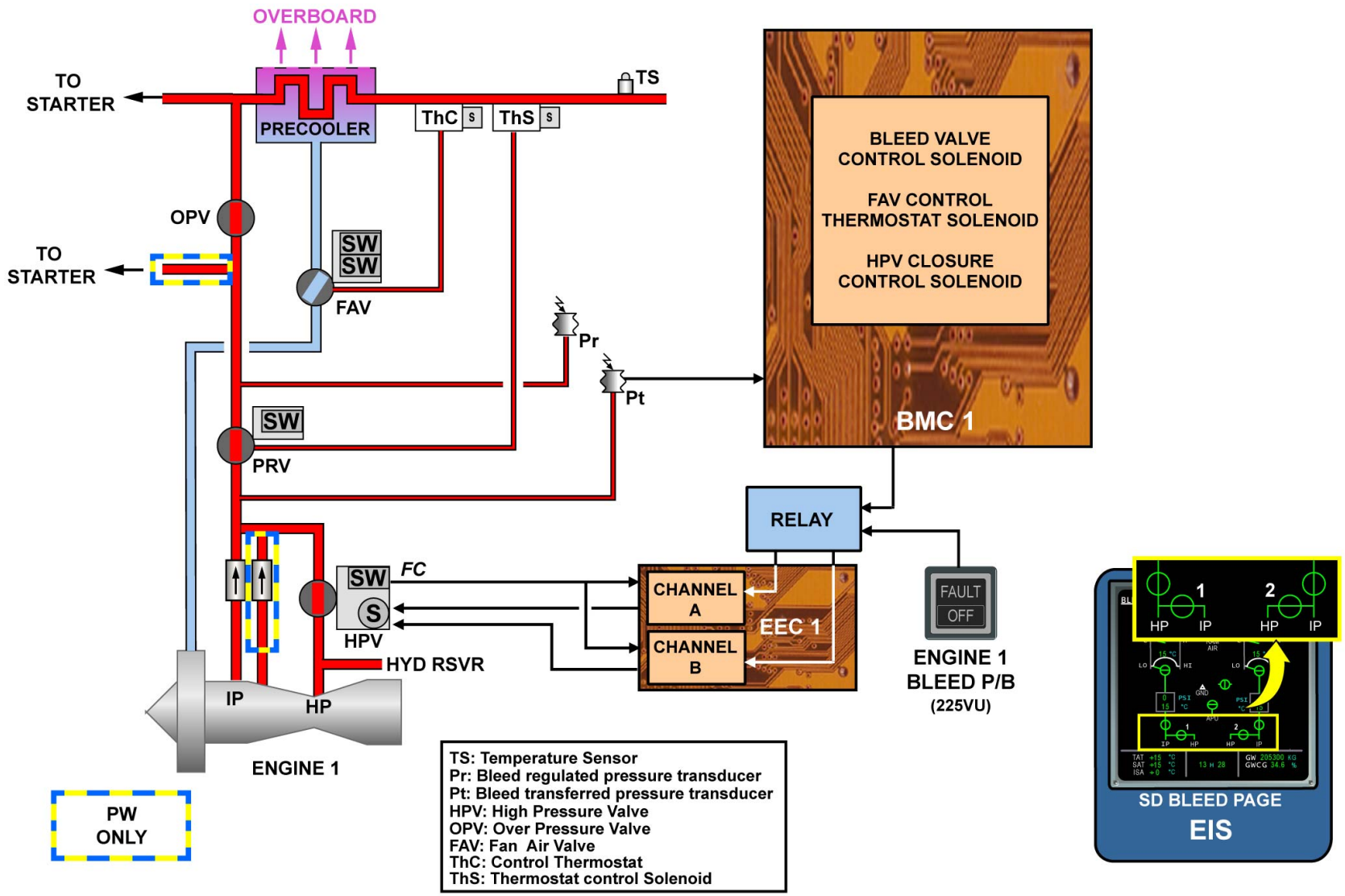

MONITORING

G7508471 - G3NT1T0 - FM36D200000005

ENGINE BLEED AIR PRESS. REG. SYS D/O (PW&RR) (3)

SYSTEM DESCRIPTION

The pressure regulating system is composed of several components:
- the Pressure Regulating Valve (PRV) associated to a Thermostat control Solenoid (ThS),
- the Over Pressure Valve (OPV),
- the bleed regulated pressure transducer.

PRESSURE REGULATING VALVE

The function of the PRV is to regulate the engine bleed pressure but it does not ensure pneumatic reverse flow protection. The reverse flow protection is done by the High Pressure bleed Valve (HPV).
The PRV is a butterfly type valve, pneumatically operated and electrically controlled by the ThS.
The PRV operates pneumatically in relation with the associated ThS.
The Ths is connected to the PRV by a pneumatic sense line and is installed in the duct downstream of the precooler exchanger.
The "Fully Closed (FC)/NOT FC" position is sensed by a microswitch used for monitoring and indicating.
The valve has a ground test port and a mechanical position indicator that has a threaded hole. This threaded hole lets the butterfly be locked in the closed position.

OVERPRESSURE VALVE

The OPV protects the downstream pneumatic system if the PRV does not operate correctly (overpressure).
The OPV is a pneumatically actuated valve and is normally open.
Muscle pressure for valve actuation is tapped from an integral pressure port located upstream of the valve.

BLEED REGULATED PRESSURE TRANSDUCER

The bleed regulated pressure transducer is a silicon type transducer, linked by a pressure sense line to a pressure tapping downstream of the PRV. The transducer is connected to both Bleed Monitoring Computers (BMCs).

G7508471 - G3NT1T0 - FM36D300000005

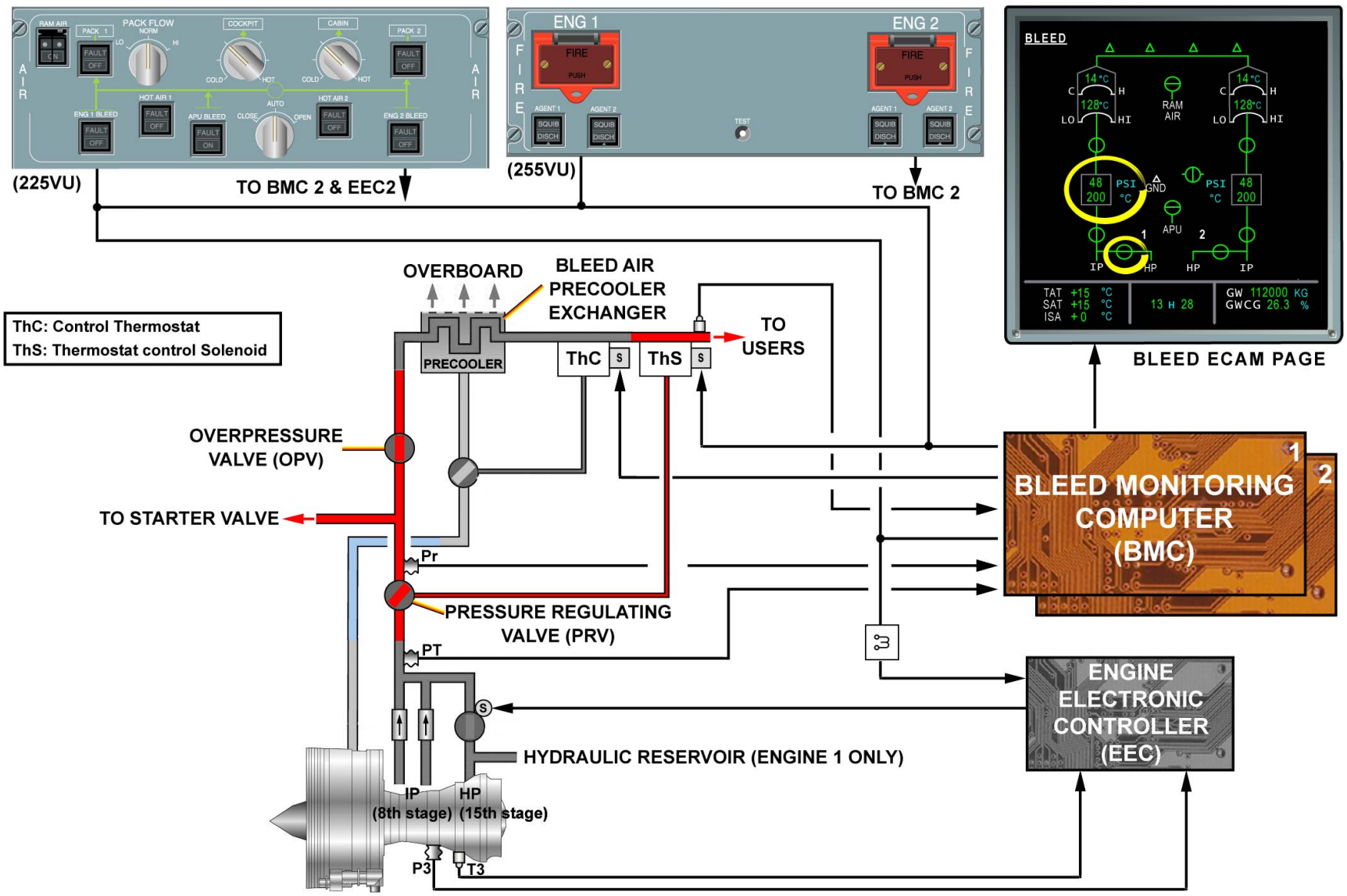

SYSTEM DESCRIPTION - PRESSURE REGULATING VALVE ... BLEED REGULATED PRESSURE TRANSDUCER

G7508471 - G3NT1T0 - FM36D300000005

ENGINE BLEED AIR PRESS. REG. SYS D/O (PW&RR) (3)

PRESSURE REGULATION

The PRV is normally spring-loaded closed in the absence of upstream pressure. A minimum upstream pressure of 8 psi is necessary to open the valve.
The PRV regulates pneumatically the downstream static pressure to:
- 52 psi maximum,
- 44 psi minimum.

The PRV will reduce the downstream static pressure by the ThS when the temperature downstream of the precooler exchanger is higher than 235 degrees Celsius.

BLEED SYSTEM ISOLATION FUNCTION

Each engine bleed system can be isolated from the pneumatic manifold in abnormal or specific conditions by closing the PRV.

MANUAL ISOLATION

The engine bleed system can be isolated manually from the pneumatic manifold by releasing the corresponding BLEED P/B on the AIR panel, and therefore energizing the ThS, resulting in the PRV closure. The "FC/NOT FC" microswitch indicates the position of the valve to the BMC, which is displayed on the ECAM BLEED page.

FIRE ISOLATION

If an engine fire occurs, the bleed system of the affected engine is isolated by releasing the corresponding FIRE P/B on the overhead panel, energizing the ThS. The ECAM BLEED page shows the position of the PRVs.

AUTOMATIC ISOLATION

The BMC can isolate automatically engine bleed air supply by energizing the ThS:
- if a pylon or wing leak is detected,
- if an overpressure occurs,
- if an over temperature occurs,
- during engine start,
- during APU bleed supply.

OVERPRESSURE PROTECTION

If the bleed regulated pressure rises above 60 psi, the BMC detects an overpressure condition and closes the PRV. A warning message is displayed on the EWD and the BLEED page comes up automatically on the SD showing the HPV and the PRV closed in amber.
In addition to the overpressure electrical monitoring done by the BMC, the OPV gives a fully pneumatic back up protection in case of failure. The OPV is designed to start to close automatically when the upstream pressure increases above 75 psi and is fully closed at 85 psi. The valve remains closed as long as the upstream pressure is higher than 52 psi (±3 psi).

MONITORING

The bleed regulated pressure transducer is used for system monitoring and fault isolation regarding the PRV and OPV. An associated fault message is sent to the ECAM and to the Central Maintenance System (CMS) for maintenance purposes.

G7508471 - G3NT1T0 - FM36D300000005

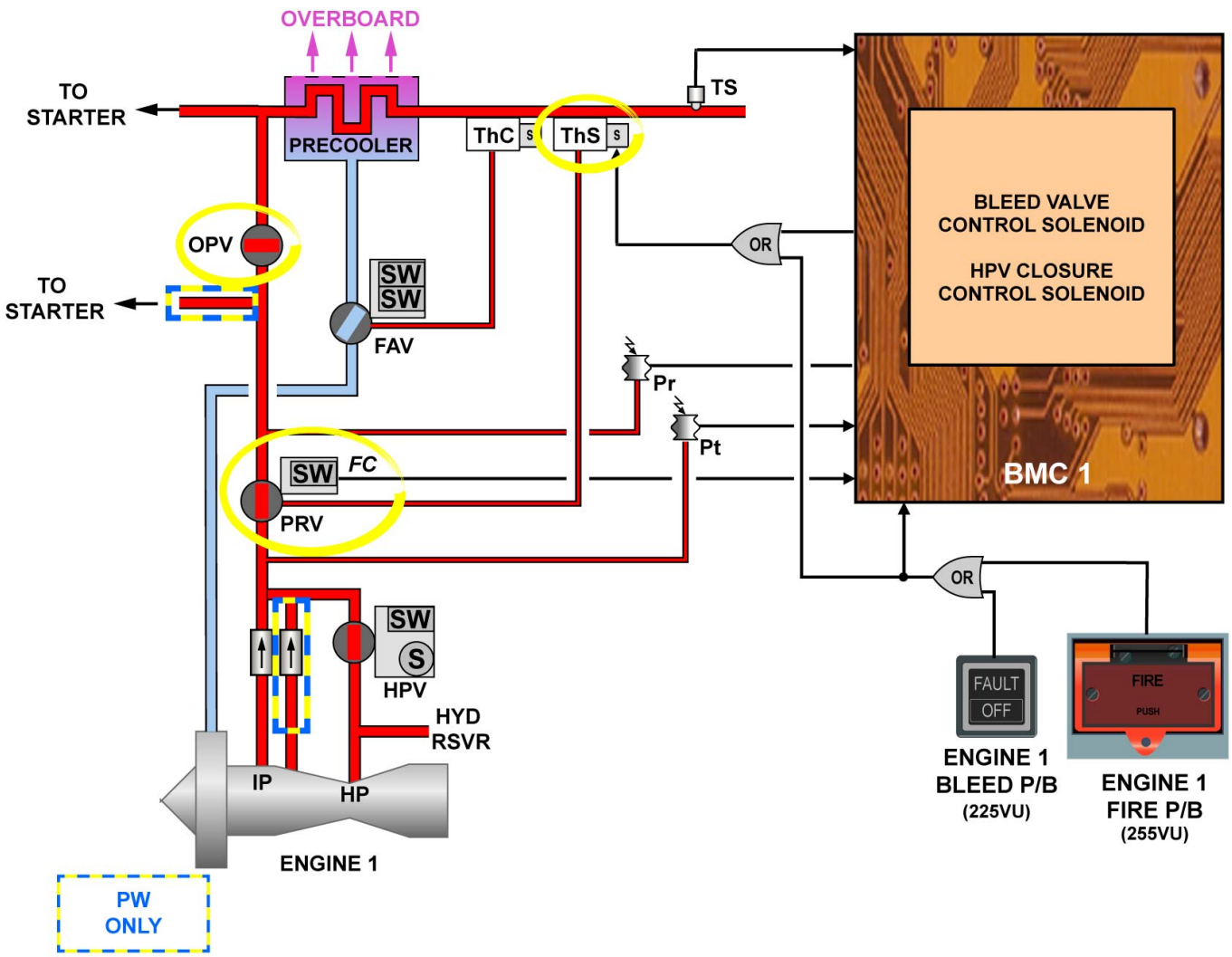

PRESSURE REGULATION ... MONITORING

G7508471 - G3NT1T0 - FM36D300000005

ENGINE BLEED AIR TEMP REGULATION SYS D/O (3)

GENERAL

The purpose of the engine bleed air temperature regulation system is to control the bleed air temperature supplied to the pneumatic manifold at two different settings.
These two temperature settings are:
- 200 degrees Celsius in nominal conditions or when the Wing Anti-Ice (WAI) system is operative,
- 150 degrees Celsius on air conditioning demand coming from the Zone Controller (ZC), when the WAI system is not operative.
In addition, it protects the user systems against bleed overheat and low temperature events.

DESCRIPTION

The temperature regulation system is composed of the following elements:
- the Fan Air Valve (FAV) associated to a Control Thermostat (ThC),
- the precooler,
- the bleed temperature sensor.

FAN AIR VALVE (FAV)

The FAV pneumatically regulates the fan airflow to the precooler for bleed air temperature regulation.
The valve is pneumatically controlled by the FAV ThC which supplies and controls the FAV motive pressure depending on the precooler outlet temperature. Without motive pressure the FAV is spring-loaded closed.
The FAV ThC has two temperature probes corresponding to the two temperature settings selected by means of a solenoid.
Fully Open (FO) and Fully Closed (FC) microswitches are installed on the valve for monitoring. For maintenance purposes, the FAV has a mechanical position indicator and a threaded hole which lets the butterfly be locked in the closed position with the vent screw.

PRECOOLER

The precooler is an air to air heat exchanger, located in the engine pylon. It uses engine fan air to cool air bled from the engine to a suitable temperature for the users.

OUTLET BLEED TEMPERATURE SENSOR

The bleed temperature sensor is a resistive platinum type dual sensor. Each sensing element of the bleed temperature sensor provides a temperature measurement to one Bleed Monitoring Computer (BMC). It is fitted on the bleed duct in the engine pylon, downstream of the precooler.

G7508471 - G3NT1T0 - FM36D400000004

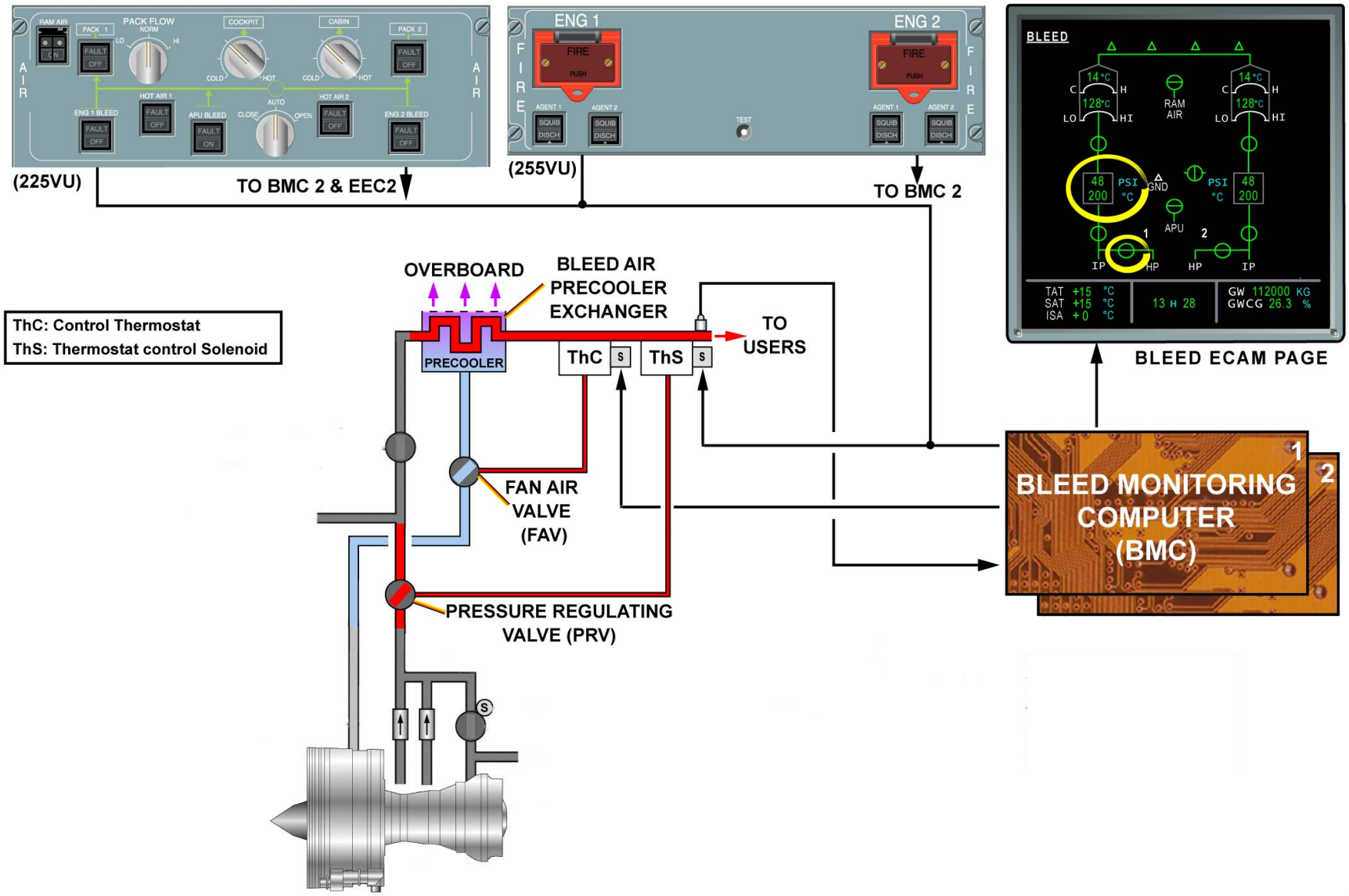

GENERAL & DESCRIPTION

ENGINE BLEED AIR TEMP REGULATION SYS D/O (3)

TEMPERATURE REGULATION

The pressure used by the ThC is picked off from the outlet of the precooler exchanger. The pressure sent to the FAV opening chamber is modulated by the expansion of the temperature probes.
The normal 200 degrees Celsius temperature demand can be switched to 150 degrees Celsius if requested by the ZC, provided ANTI ICE WING P/B is not selected ON. In this case the solenoid is energized by the BMC and the second probe becomes active.

G7508471 - G3NT1T0 - FM36D400000004

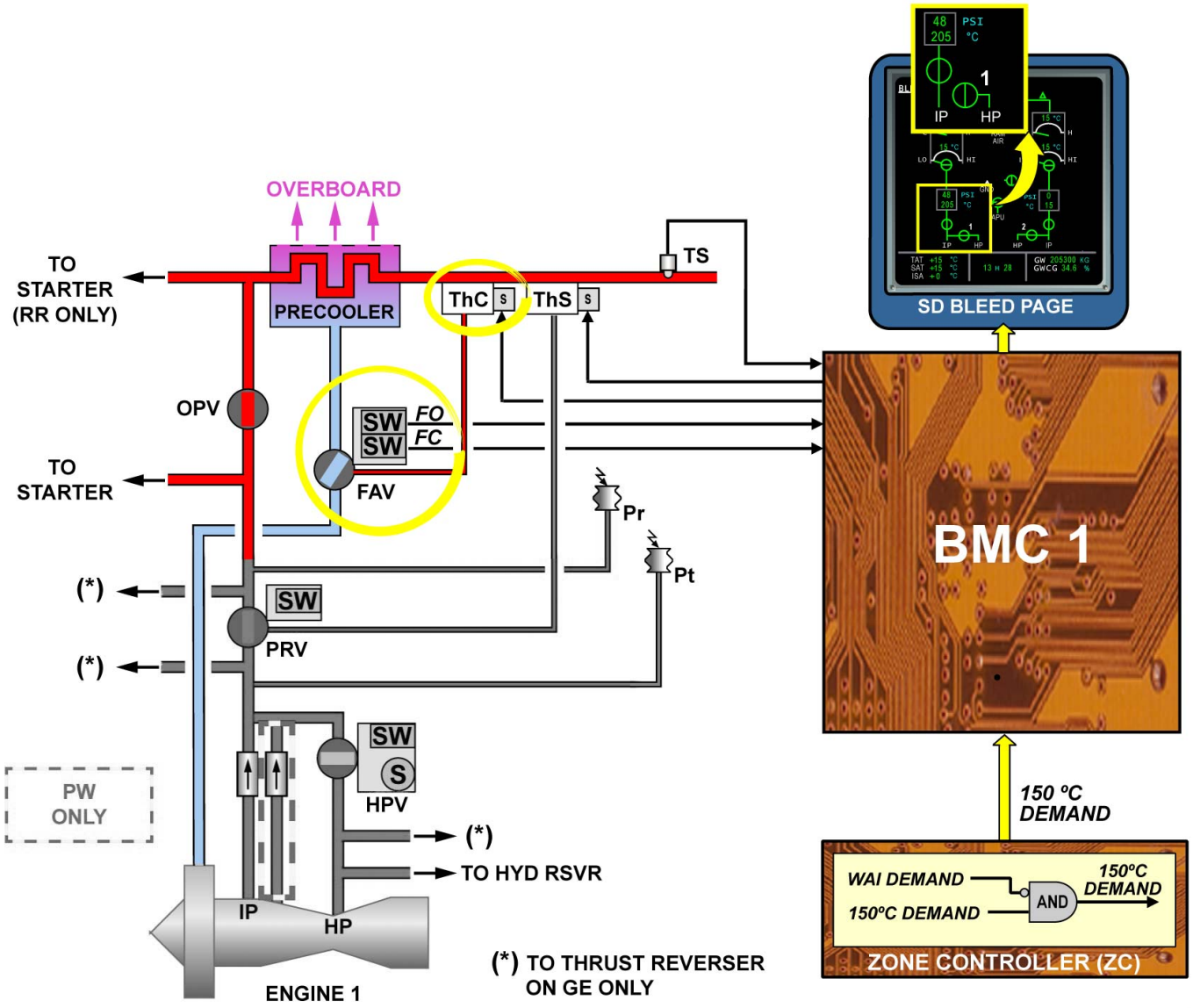

TEMPERATURE REGULATION

ENGINE BLEED AIR TEMP REGULATION SYS D/O (3)

TEMPERATURE REGULATION (continued)

TEMPERATURE LIMITATION AND OVERHEAT DETECTION

The bleed temperature limitation function overrides the bleed pressure control.
This limitation is activated by the ThS when the bleed temperature exceeds 235 degrees Celsius. The FAV being already fully opened, the ThS will command the Pressure Regulating Valve (PRV) to reduce the bleed air flow in order to lower the temperature.
Above 257 degrees Celsius the PRV is controlled automatically closed by the BMC, the temperature displayed on the ECAM turns to amber and an ECAM message comes up.

LOW TEMPERATURE DETECTION

When the ANTI ICE WING P/B is ON, a low temperature is detected by the BMC if the temperature read by the bleed temperature sensor is below 150 degrees Celsius. A warning is triggered on the ECAM and the bleed temperature is displayed in amber.

MONITORING

FAV operation monitoring and fault isolation is done when an overheat or a low temperature event occurs by analyzing the feedback of the two FAV position microswitches. An associated fault message is sent to the ECAM and to the Central Maintenance System (CMS) for maintenance purposes.

G7508471 - G3NT1T0 - FM36D400000004

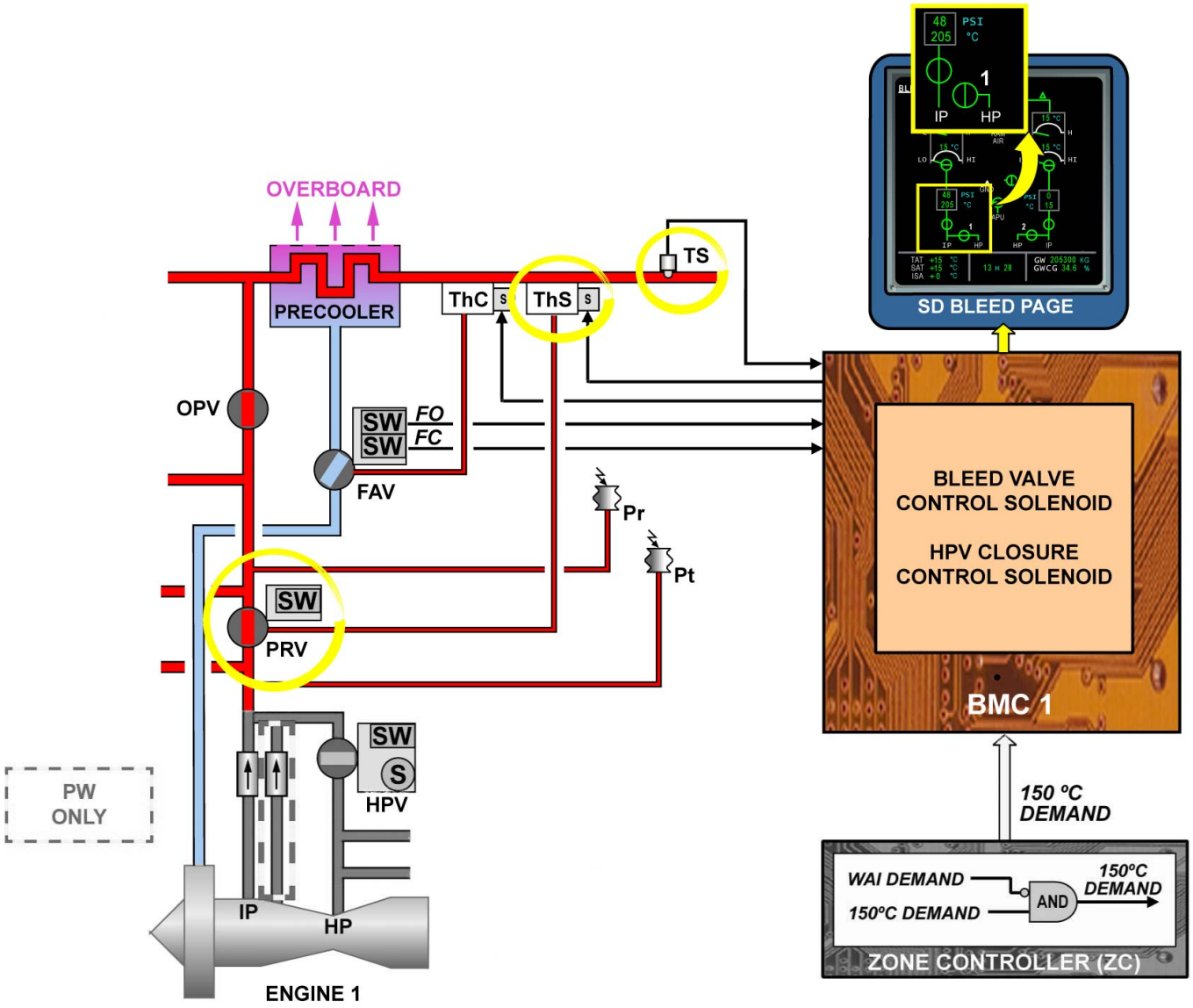

TEMPERATURE REGULATION & MONITORING

LEAK DETECTION SYSTEM D/O (3)

GENERAL

The leak detection system is divided into two sub-systems, left and right. The separation is made at the crossbleed valve level.
The detection loops are located along the bleed air network. Each loop is composed of overheat sensing elements connected in series.
Dual loop detection systems are installed in the wings, packs and crossbleed valve area and the APU bleed duct area. A single loop detection system is installed in the pylons.

SENSING ELEMENTS

The sensing elements have a solid center conductor set in an aluminum oxide insulator and are integrated in an outer tube connected to A/C ground. Eutectic salt fills the space between the outer tubing and the center conductor.
Each sensing element is permanently subjected to the temperature of the compartment it protects. For any temperature higher than a preset value and applied to a small length of the element, the resistance of the eutectic salt rapidly decreases and continuity is established between the tube and the conductor. The center conductor is grounded.

G7508471 - G3NT1T0 - FM36D500000004

LOOP	TEMPERATURE
Pylon 1,2	200ºC
LH Wing Bleed Duct	124ºC
RH Wing Bleed Duct	124ºC
APU Duct	124ºC between FR56 and FR80/92 157ºC between FR80/92 and FR95

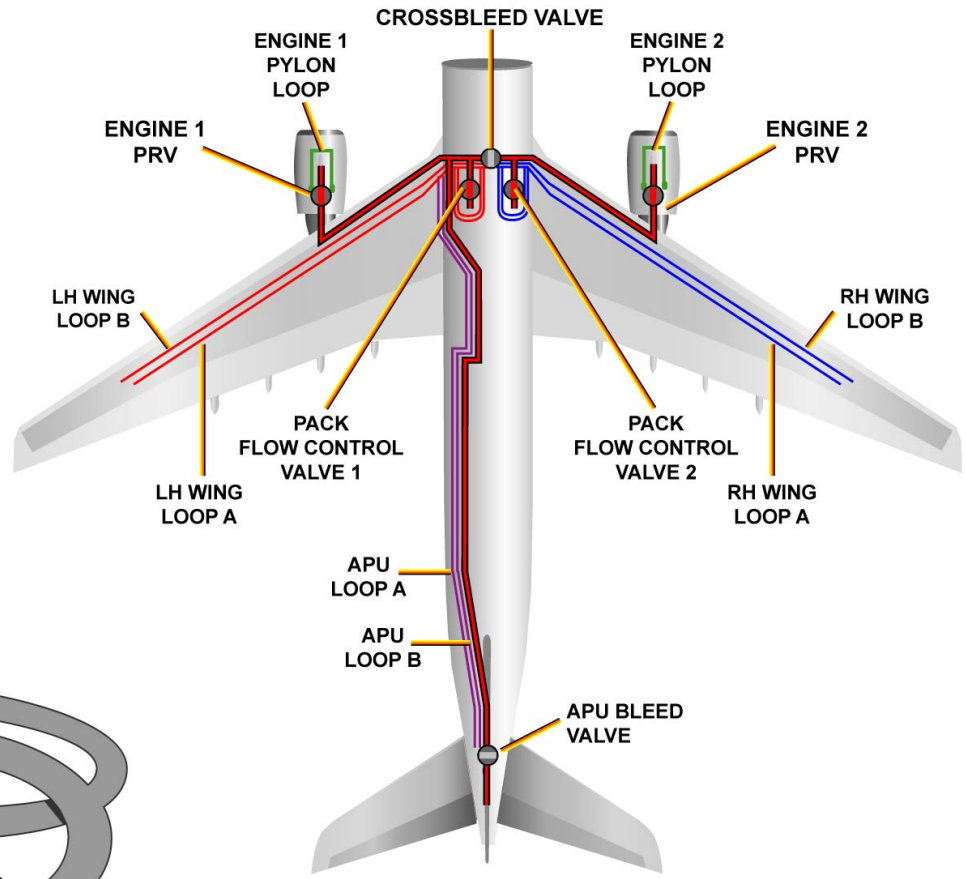

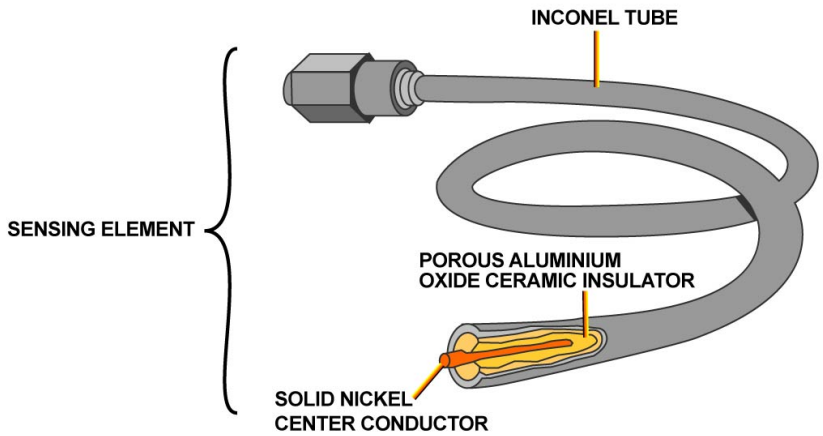

GENERAL & SENSING ELEMENTS

G7508471 - G3NT1T0 - FM36D500000004

LEAK DETECTION SYSTEM D/O (3)

BMC LOOP MONITORING

Each Bleed Monitoring Computer (BMC) monitors four detection loops:
- one in the engine pylon,
- one in the LH wing and above the LH pack,
- one in the RH wing and above the RH pack,
- one APU loop.

Both BMCs exchange loop status data via ARINC buses. BMC 1 sends an APU leak discrete signal to BMC 2.
If one BMC operation is lost, the other BMC takes over for wing/pack and APU leak monitoring but the corresponding pylon leak detection is lost.

LEAK DETECTION OPERATION

As soon as a leak occurs, the hot air increases the temperature of the affected area detection loops and thus modifies their resistance. This resistance change is detected by the corresponding BMC which isolates the affected system by closing the relevant valves.
During APU bleed operation, if a hot air leak is detected, a closure demand is sent by the BMC to the Electronic Control Box (ECB) which does the APU bleed valve closure control, except during Main Engine Start (MES) sequence.
If the APU bleed valve is commanded closed and the crossbleed valve selector is in the AUTO mode, the crossbleed valve closes too.
As soon as a leak is detected, a warning message is displayed on the EWD. In addition, the AIR panel BLEED P/BSWs are used to indicate leaks and their FAULT legend comes on in amber.
The FAULT legend of engine 1 BLEED P/BSW comes on if a leak is detected in the left pneumatic manifold.
The FAULT legend of engine 2 BLEED P/BSW comes on if a leak is detected in the right pneumatic manifold.
The FAULT legend of APU BLEED P/BSW comes on if a leak is detected in the APU bleed air system.
The FAULT legend of the BLEED P/BSWs remains on as long as the hot air leak continues.

G7508471 - G3NT1T0 - FM36D500000004

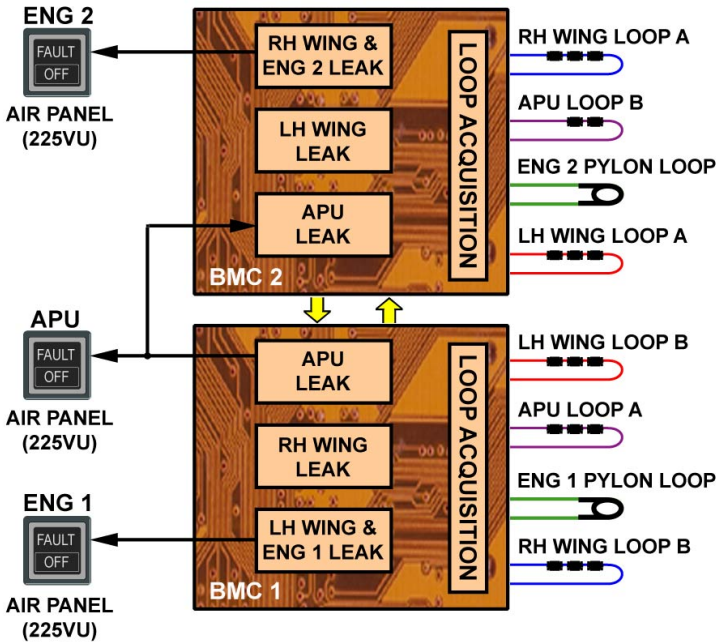

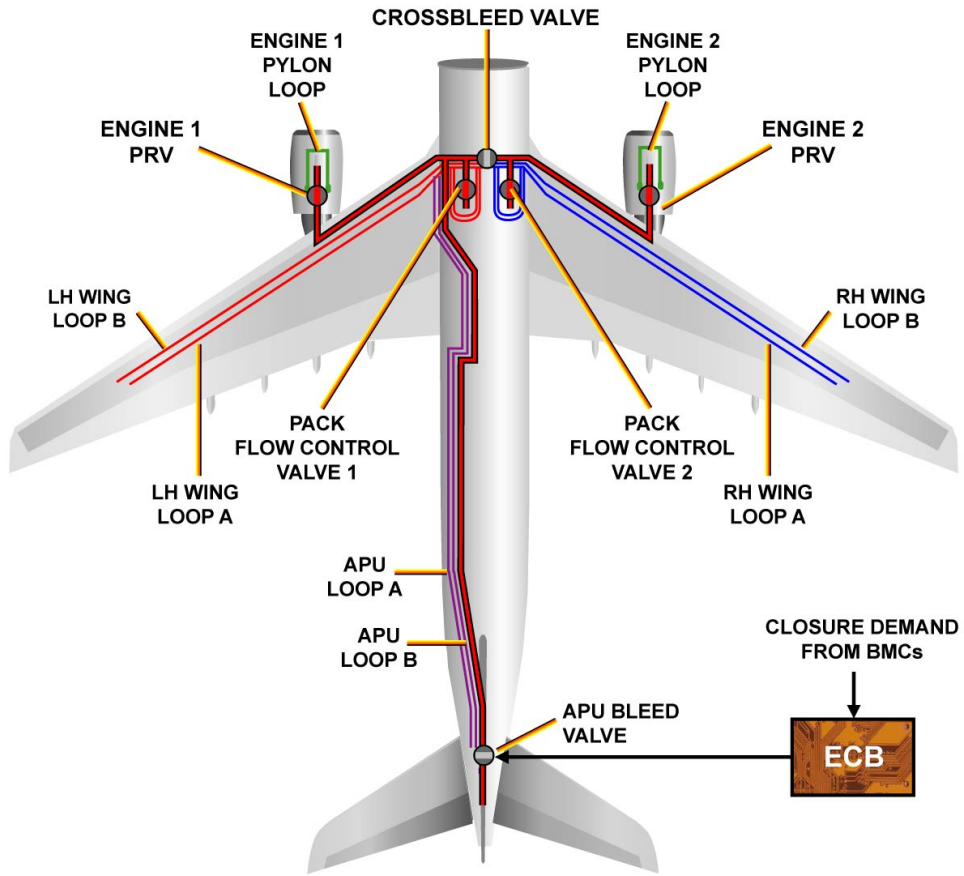

Type of failure	AUTOMATIC RESPONSE / VALVE CLOSURE			
	Eng 1 bleed valve	Eng 2 bleed valve	Cross-bleed valve	APU bleed valve
Left wing leak (wing or Xbleed)	X		X *	X *
Right wing leak (wing or Xbleed)		X	X *	
Engine 1 pylon leak	X		X *	X *
Engine 2 pylon leak		X	X *	
APU leak			X	X

* EXCEPT DURING ENGINE START SEQUENCE

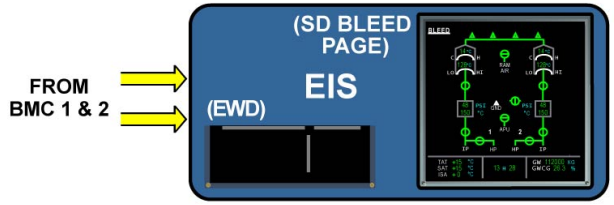

BMC LOOP MONITORING & LEAK DETECTION OPERATION

G7508471 - G3NT1T0 - FM36D500000004

PNEUMATIC SYSTEM BASE MAINTENANCE (3)

INTRODUCTION

WARNING: PARTS CAN BE HOT FOR 1 HOUR AFTER ENGINE SHUT DOWN.

WARNING: MAKE SURE THAT THE PNEUMATIC SYSTEM IS DEPRESSURIZED BEFORE YOU START WORK. PRESSURIZED AIR CAN CAUSE INJURY TO PERSONS.

WARNING

MAKE SURE THAT THE PNEUMATIC SYSTEM IS DEPRESSURIZED BEFORE YOU START WORK

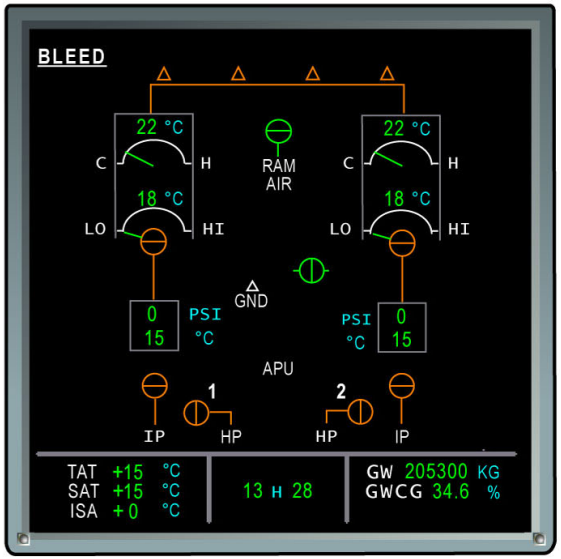

ECAM BLEED PAGE

WARNING

PARTS CAN BE HOT FOR 1 HOUR AFTER ENGINE SHUT DOWN

INTRODUCTION

PNEUMATIC SYSTEM BASE MAINTENANCE (3)

FUNCTIONAL TEST OF THE BLEED TRANSFERRED PRESSURE TRANSDUCER

This task enables to check the bleed transferred pressure transducer using an external compressed air.

G7508471 - G3NT1T0 - FM36Y2BASEMCE04

Functional Test of the Bleed Transferred Pressure Transducer

...

Job set-up

...

- Safety precautions.
- Get access.
- Aircraft maintenance configuration.

...

Procedure

...

- Functional test of the bleed transferred pressure transducer.

...

Close-up

...

- Aircraft maintenance configuration.
- Do the BITE test of the BMC.
- Close access.

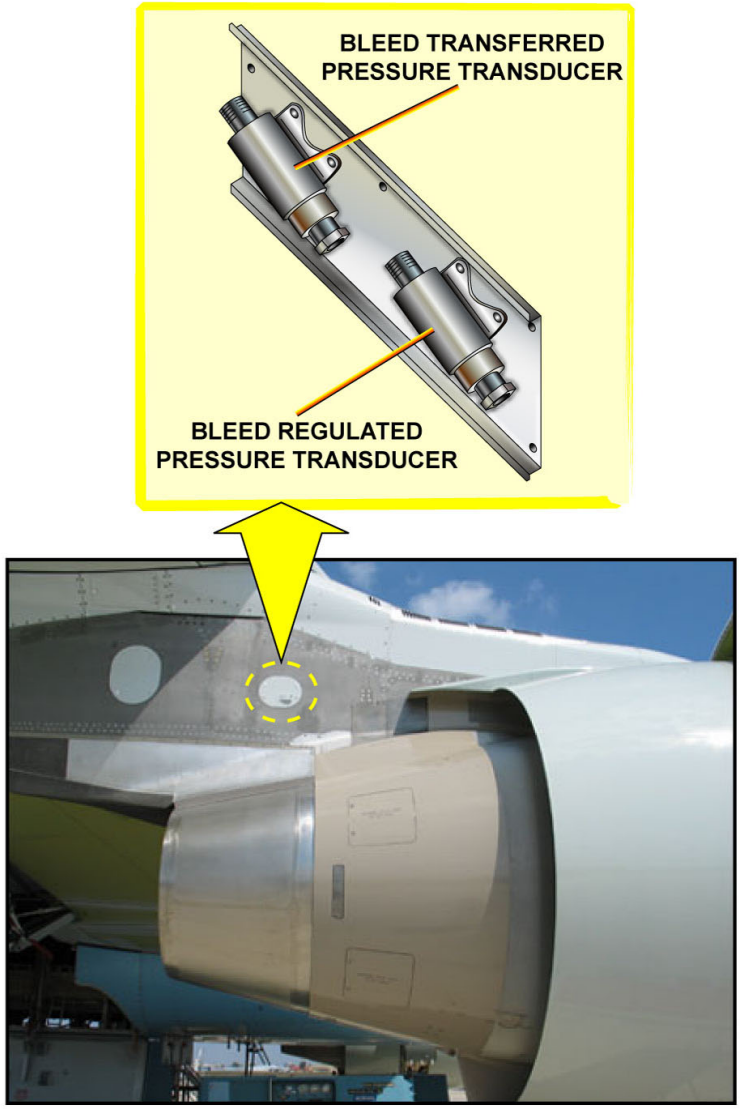

FUNCTIONAL TEST OF THE BLEED TRANSFERRED PRESSURE TRANSDUCER

PNEUMATIC SYSTEM BASE MAINTENANCE (3)

FUNCTIONAL TEST OF THE BLEED TRANSFERRED PRESSURE TRANSDUCER (continued)

JOB SET-UP

In the cockpit, after energizing the A/C electrical circuits, make sure that the ENG system and the bleed system are de-energized and put warning notices on the ENG START panel (145VU), ENG MASTER control panel (125VU), ENG section of the maintenance panel (285VU) and AIR control panel (225VU) to tell people not to operate these systems.
On the High Pressure (HP) ground connectors located on the belly fairing, put a warning notice to tell people not to pressurize the pneumatic system.
Get access to the top of the pylon and remove the applicable panels to reach the transferred pressure transducer.
Disconnect the electrical connector from the bleed transferred pressure transducer and the bleed regulated pressure transducer.
Use the cable bundle from the TEST SET (98F36003002000 or 98D36003000001) to connect the electrical connector of the transferred pressure transducer and the regulated pressure transducer.
Disconnect the sense line from the transferred pressure transducer.

G7508471 - G3NT1T0 - FM36Y2BASEMCE04

Functional Test of the Bleed Transferred Pressure Transducer

...

Job set-up

...

- **Safety precautions.**
- **Get access.**
- **Aircraft maintenance configuration.**

...

Procedure

...

- **Functional test of the bleed transferred pressure transducer.**

...

Close-up

...

- **Aircraft maintenance configuration.**
- **Do the BITE test of the BMC.**
- **Close access.**

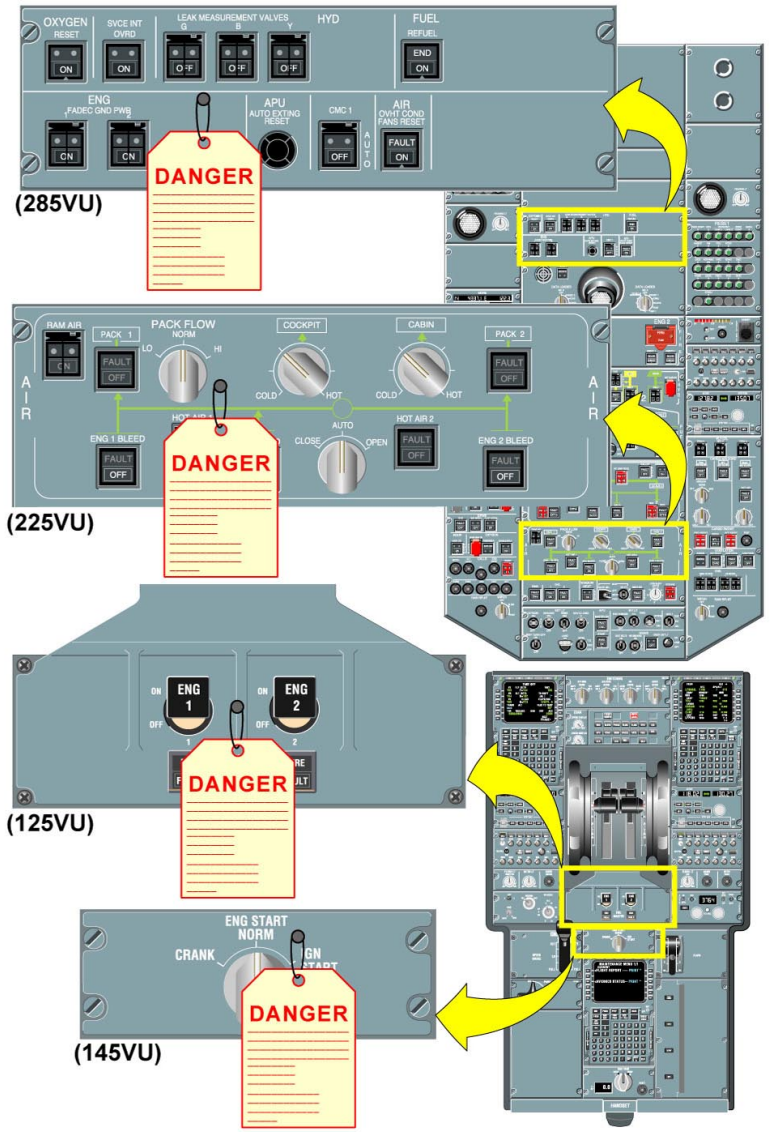

FUNCTIONAL TEST OF THE BLEED TRANSFERRED PRESSURE TRANSDUCER - JOB SET-UP

G7508471 - G3NT1T0 - FM36Y2BASEMCE04

Functional Test of the Bleed Transferred Pressure Transducer

...

Job set-up

...

- **Safety precautions.**
- **Get access.**
- **Aircraft maintenance configuration.**

...

Procedure

...

- **Functional test of the bleed transferred pressure transducer.**

...

Close-up

...

- **Aircraft maintenance configuration.**
- **Do the BITE test of the BMC.**
- **Close access.**

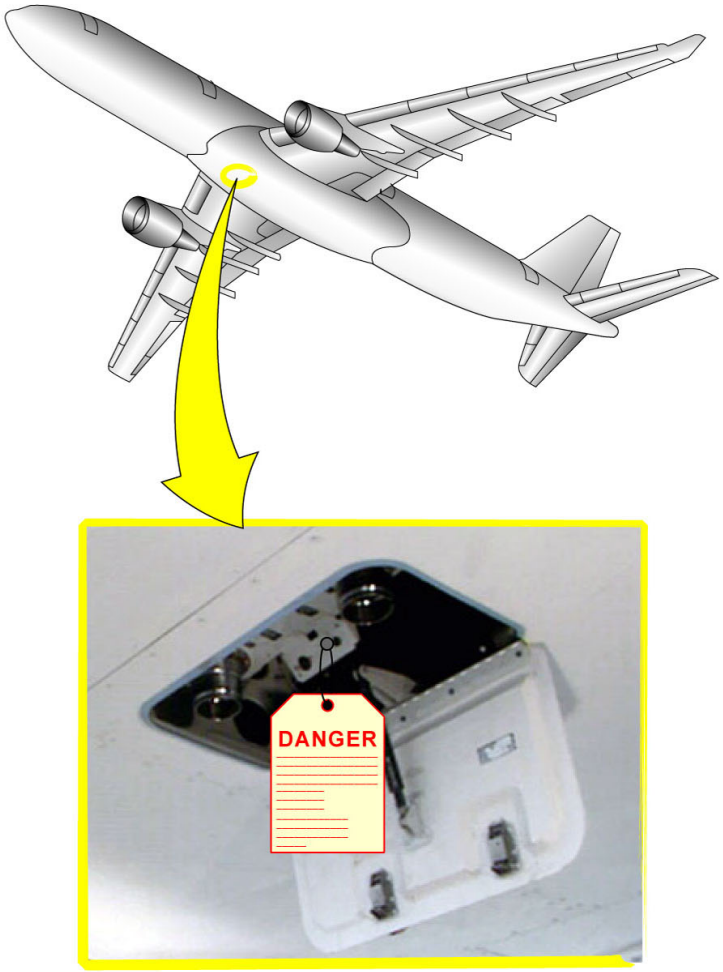

FUNCTIONAL TEST OF THE BLEED TRANSFERRED PRESSURE TRANSDUCER - JOB SET-UP

G7508471 - G3NT1T0 - FM36Y2BASEMCE04

Functional Test of the Bleed Transferred Pressure Transducer

...

Job set-up

...

- ✓ Safety precautions.
- ⇨ Get access.
- Aircraft maintenance configuration.

...

Procedure

...

- Functional test of the bleed transferred pressure transducer.

...

Close-up

...

- Aircraft maintenance configuration.
- Do the BITE test of the BMC.
- Close access.

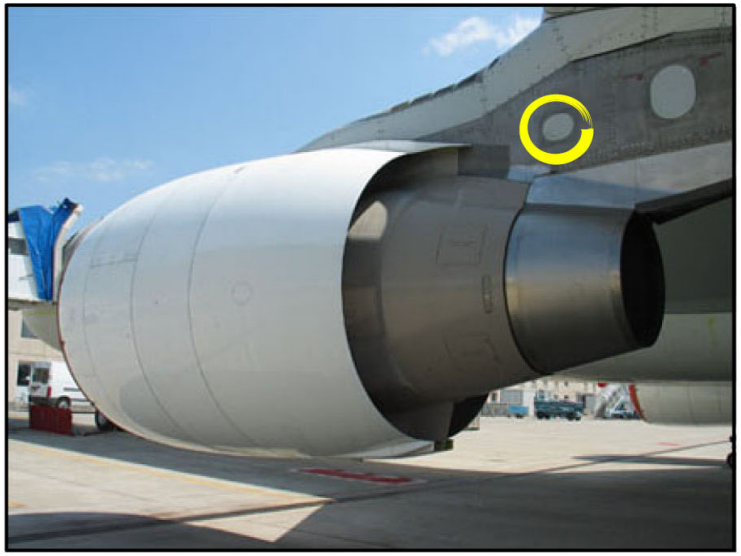

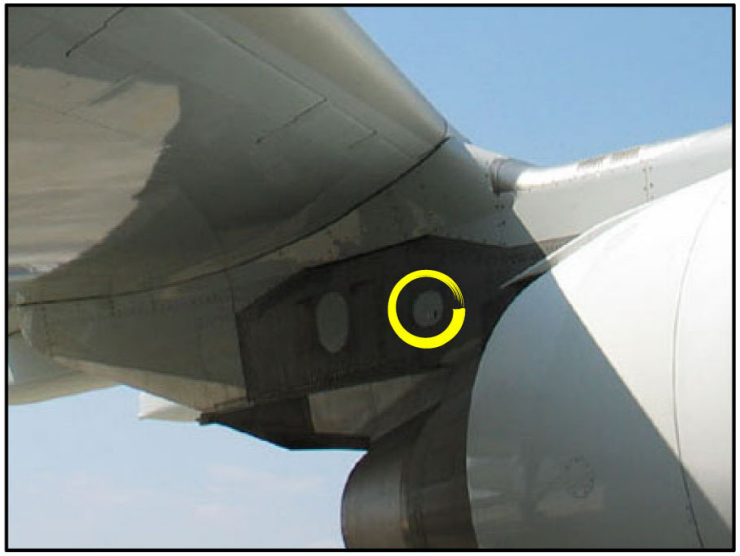

FUNCTIONAL TEST OF THE BLEED TRANSFERRED PRESSURE TRANSDUCER - JOB SET-UP

G7508471 - G3NT1T0 - FM36Y2BASEMCE04

Functional Test of the Bleed Transferred Pressure Transducer

...

Job set-up

...

- ✓ **Safety precautions.**
- ✓ **Get access.**
- ➡ **Aircraft maintenance configuration.**
  Disconnect the electrical connector from the transferred pressure transducer and the regulated pressure transducers.
  Use the cable bundle from the TEST SET to connect the electrical connectors of the transferred and regulated pressure transducers.
  Disconnect the sense line from the transferred pressure transducer.

...

Procedure

...

- **Functional test of the bleed transferred pressure transducer.**

...

Close-up

...

- **Aircraft maintenance configuration.**
- **Do the BITE test of the BMC.**
- **Close access.**

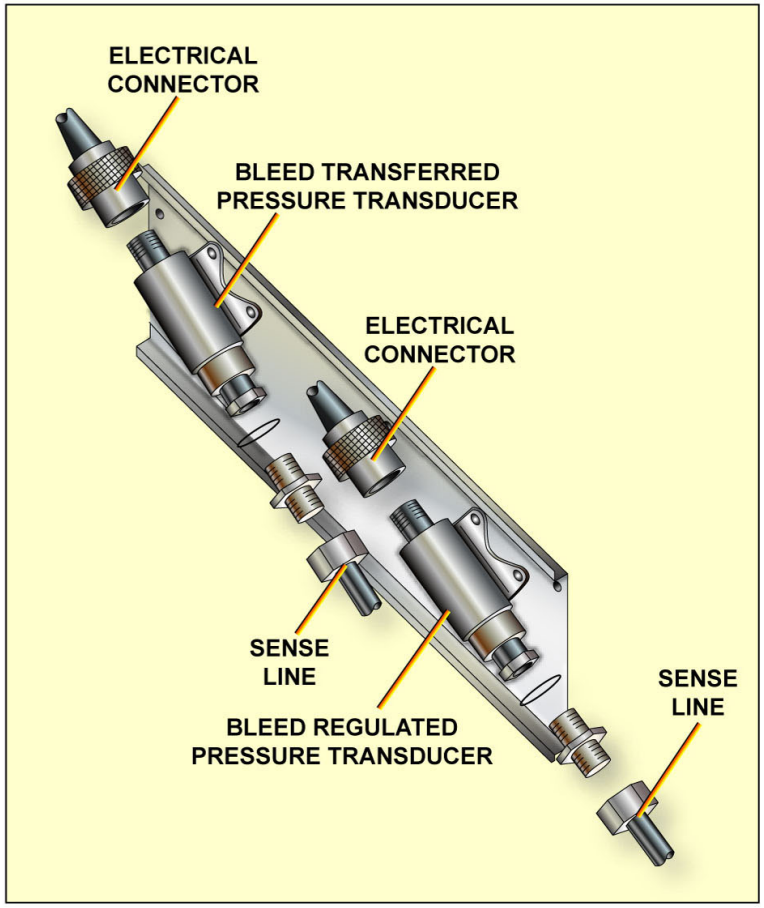

FUNCTIONAL TEST OF THE BLEED TRANSFERRED PRESSURE TRANSDUCER - JOB SET-UP

This Page Intentionally Left Blank

G7508471 - G3NT1T0 - FM36Y2BASEMCE04

PNEUMATIC SYSTEM BASE MAINTENANCE (3)

FUNCTIONAL TEST OF THE BLEED TRANSFERRED PRESSURE TRANSDUCER (continued)

PROCEDURE

Connect the TEST SET supply to the transducer pressure port.
Push the BLEED key on the ECAM control panel to show the ECAM BLEED page.
On the TEST SET, open the shut off valve of the air cylinder.
Use the primary pressure regulator to pressurize the TEST SET to 100 psi.
Then use the pressure regulator No.1 to slowly pressurize the transducer from 10 to 90 psi.
On the BLEED page, check that the pressure value agrees with the pressure gage No.1 plus or minus 2 psi.

Functional Test of the Bleed Transferred Pressure Transducer

...

✓ **Job set-up**

...

✓ **Safety precautions.**

✓ **Get access.**

✓ **Aircraft maintenance configuration.**

...

Procedure

...

➡ **Functional test of the bleed transferred pressure transducer.**

✓ Connect the TEST SET supply to the transducer pressure port.

➡ Push the BLEED key on the ECAM control panel.

On the TEST SET open the shut off valve of the air cylinder.

Use the primary regulator to pressurize the pressure source to 100 PSI (6.9 bar).

Slowly pressurize the system No.1 from 10 PSI (0.69 bar) to 90 PSI (6.21 bar).

On the BLEED page, the pressure must agree with the value of the pressure gage No.1 plus or minus 2 PSI.

...

Close-up

...

Aircraft maintenance configuration.

Do the BITE test of the BMC.

Close access.

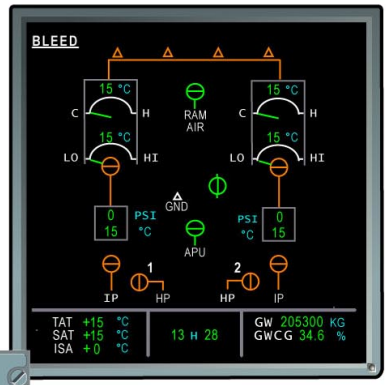

BLEED ECAM PAGE

(100VU)

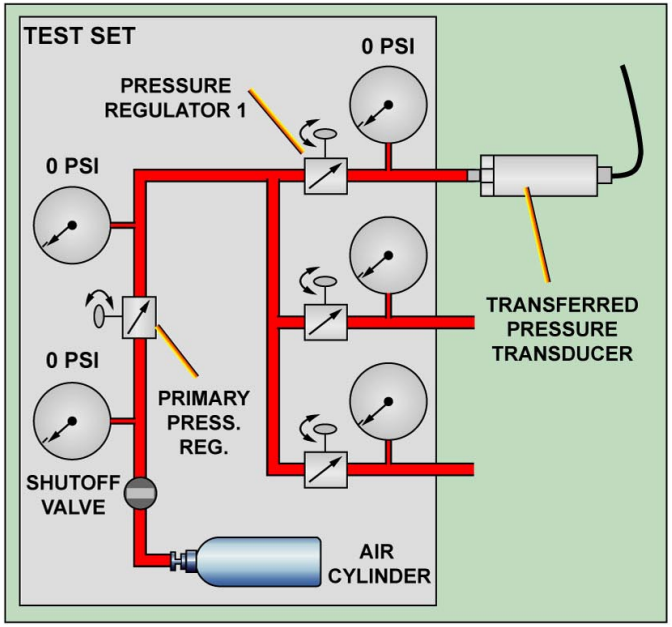

FUNCTIONAL TEST OF THE BLEED TRANSFERRED PRESSURE TRANSDUCER - PROCEDURE

Functional Test of the Bleed Transferred Pressure Transducer

...

✓ **Job set-up**

...

✓ **Safety precautions.**

✓ **Get access.**

✓ **Aircraft maintenance configuration.**

...

Procedure

...

⇨ **Functional test of the bleed transferred pressure transducer.**

- ✓ Connect the TEST SET supply to the transducer pressure port.
- ✓ Push the BLEED key on the ECAM control panel.
- ✓ On the TEST SET open the shut off valve of the air cylinder.
- ✓ Use the primary regulator to pressurize the pressure source to 100 PSI (6.9 bar).
- ✓ Slowly pressurize the system No.1 from 10 PSI (0.69 bar) to 90 PSI (6.21 bar).
- ⇨ On the BLEED page, the pressure must agree with the value of the pressure gage No.1 plus or minus 2 PSI.

...

Close-up

...

Aircraft maintenance configuration.

Do the BITE test of the BMC.

Close access.

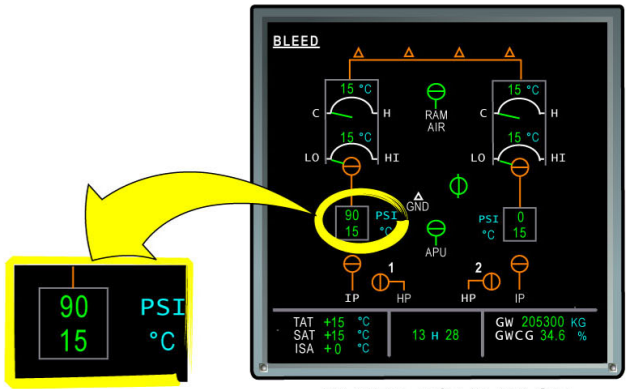

BLEED ECAM PAGE

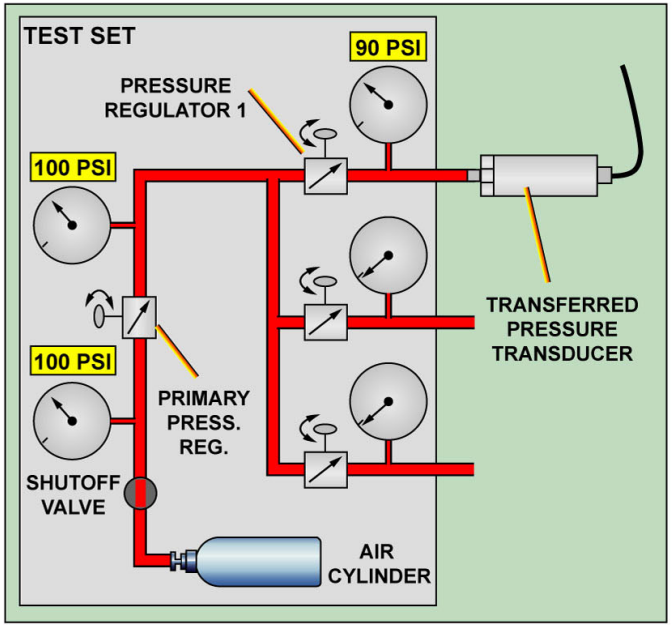

FUNCTIONAL TEST OF THE BLEED TRANSFERRED PRESSURE TRANSDUCER - PROCEDURE

G7508471 - G3NT1T0 - FM36Y2BASEMCE04

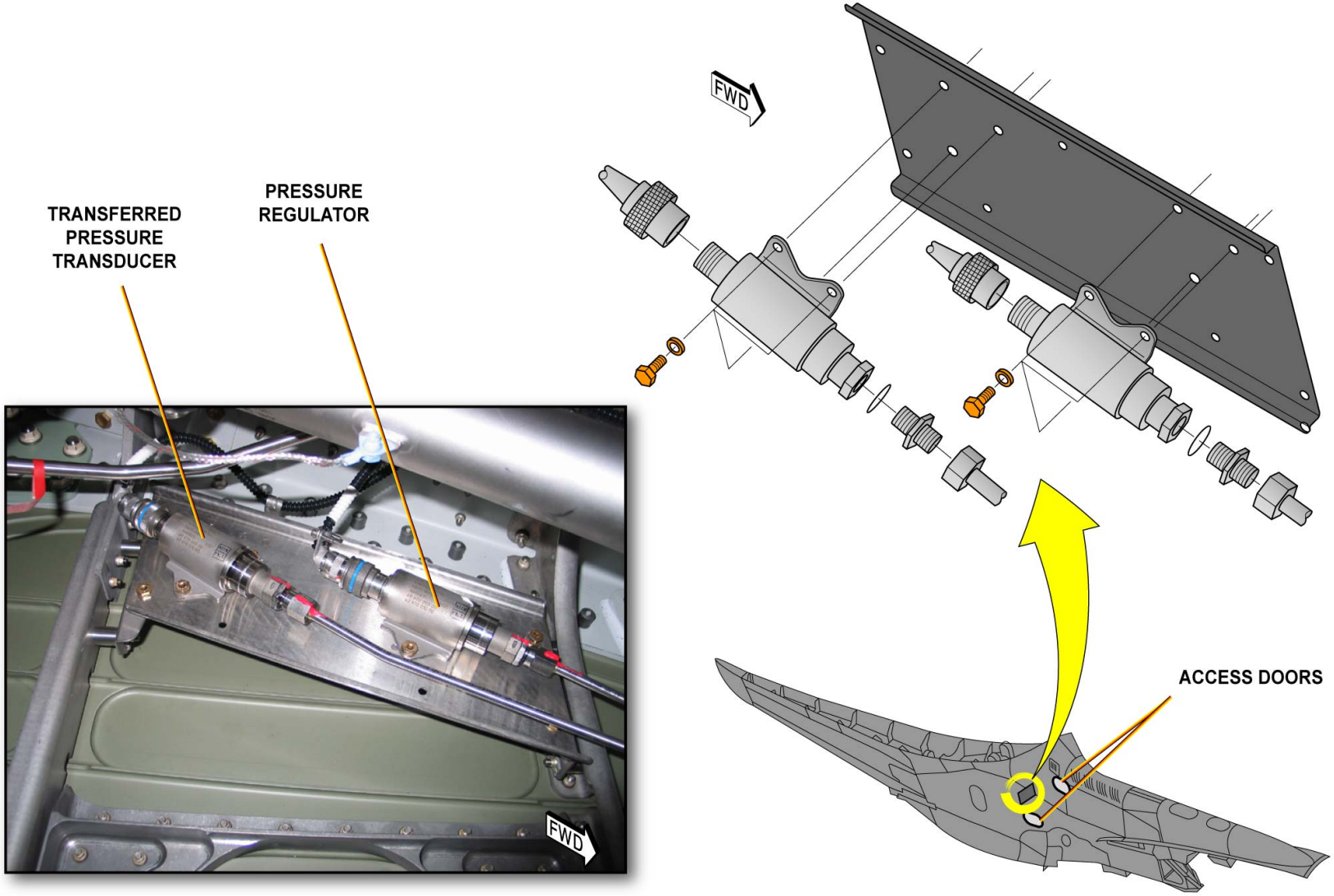

FUNCTIONAL TEST OF THE BLEED TRANSFERRED PRESSURE TRANSDUCER - PROCEDURE

PNEUMATIC SYSTEM BASE MAINTENANCE (3)

FUNCTIONAL TEST OF THE BLEED TRANSFERRED PRESSURE TRANSDUCER (continued)

CLOSE-UP

Depressurize the TEST SET.
Disconnect the TEST SET from the bleed transferred pressure transducer and reconnect it to the sense line.
Disconnect the cable bundle from the pressure transducers and reconnect the electrical connectors of the transducers.
On the MCDU, on the corresponding Bleed Monitoring Computer (BMC) page, do a BITE TEST by selecting TEST.
To launch the BITE TEST, press START TEST and wait until the test ends.
Once the TEST is finished, check that there are no maintenance messages related to the transducer.
Close the applicable access panels and put the A/C back to its initial configuration.

Functional Test of the Bleed Transferred Pressure Transducer

...
✓ **Job set-up**
...

✓ **Safety precautions.**

✓ **Get access.**

✓ **Aircraft maintenance configuration.**

...
✓ **Procedure**
...

✓ **Functional test of the bleed transferred pressure transducer.**

...
Close-up
...

⇨ **Aircraft maintenance configuration.**

Depressurize the TEST SET.

Disconnect the TEST SET from the transferred pressure transducer and reconnect it to the sense line.

Disconnect the cable bundle from the pressure transducers and reconnect the electrical connectors.

Do the BITE test of the BMC.

Close access.

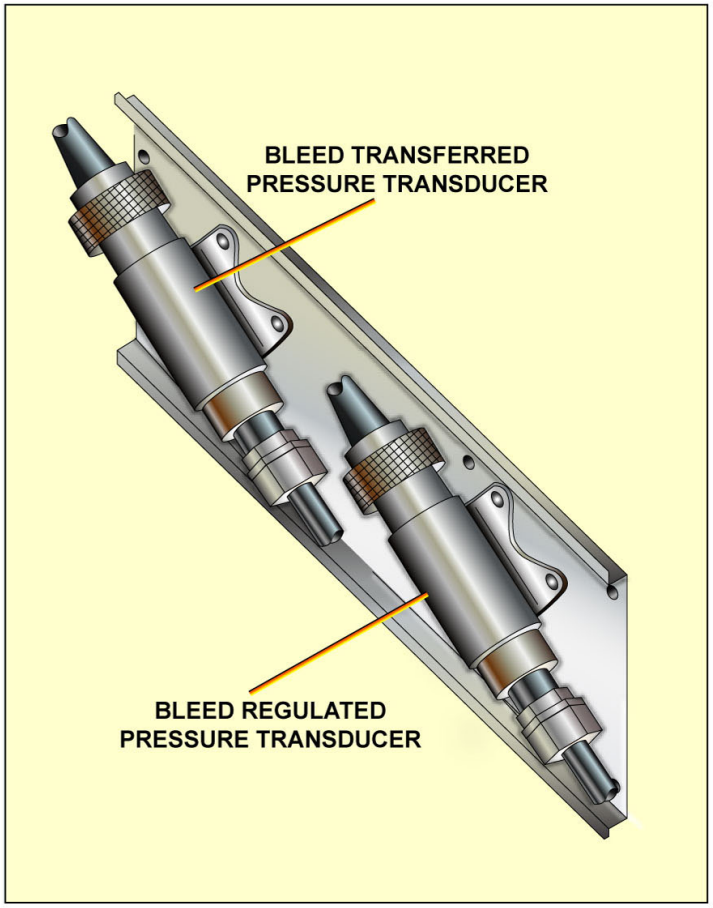

FUNCTIONAL TEST OF THE BLEED TRANSFERRED PRESSURE TRANSDUCER - CLOSE-UP

G7508471 - G3NT1T0 - FM36Y2BASEMCE04

Functional Test of the Bleed Transferred Pressure Transducer

...

✓ **Job set-up**

...

✓ **Safety precautions.**

✓ **Get access.**

✓ **Aircraft maintenance configuration.**

...

✓ **Procedure**

...

✓ **Functional test of the bleed transferred pressure transducer.**

...

Close-up

...

✓ **Aircraft maintenance configuration.**

⇨ **Do the BITE test of the BMC.**

⇨ Press the TEST key on the corresponding BMC page of the MCDU.

Press the START TEST key and wait until the test ends.

Check that there are no maintenance messages related to the transducer.

Close access.

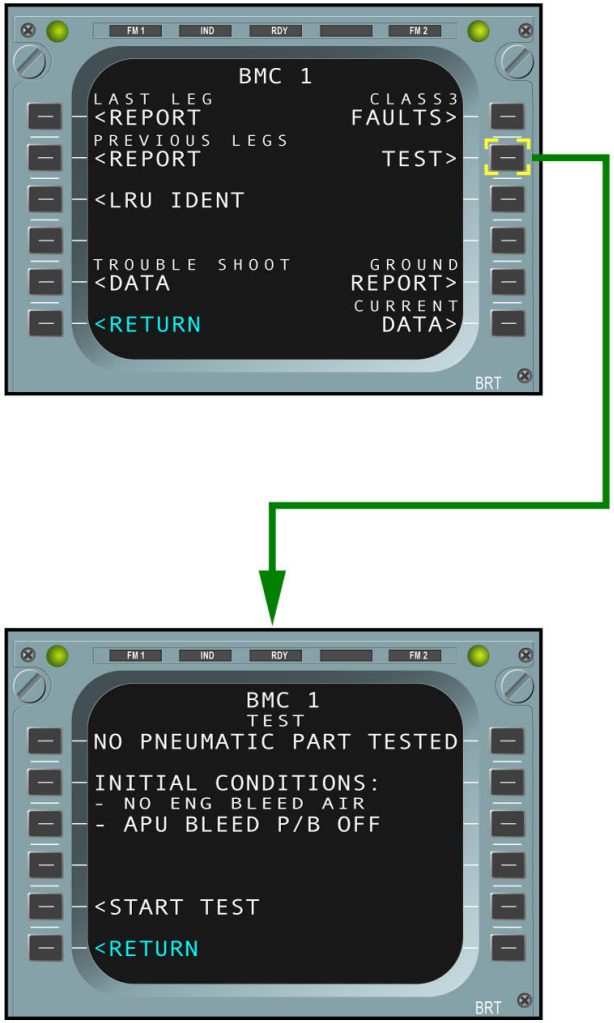

FUNCTIONAL TEST OF THE BLEED TRANSFERRED PRESSURE TRANSDUCER - CLOSE-UP

G7508471 - G3NT1T0 - FM36Y2BASEMCE04

Functional Test of the Bleed Transferred Pressure Transducer

...
✓ Job set-up
...

✓ Safety precautions.

✓ Get access.

✓ Aircraft maintenance configuration.

...
✓ Procedure
...

✓ Functional test of the bleed transferred pressure transducer.

...
Close-up
...

✓ Aircraft maintenance configuration.

⇨ **Do the BITE test of the BMC.**
- ✓ Press the TEST key on the corresponding BMC page of the MCDU.
- ⇨ Press the START TEST key and wait until the test ends.
- Check that there are no maintenance messages related to the transducer.

Close access.

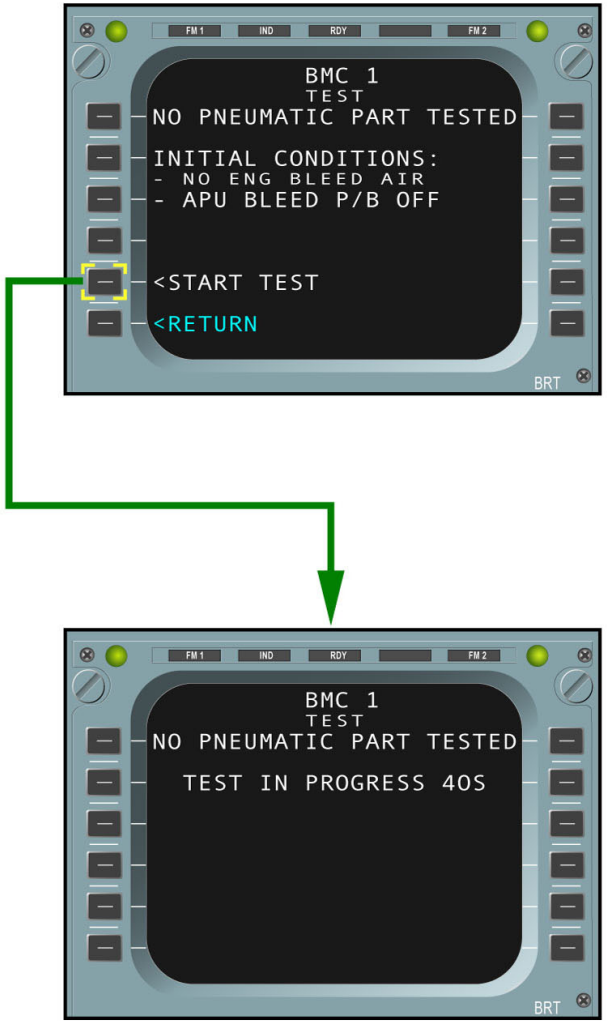

FUNCTIONAL TEST OF THE BLEED TRANSFERRED PRESSURE TRANSDUCER - CLOSE-UP

Functional Test of the Bleed Transferred Pressure Transducer

...

✓ **Job set-up**

...

✓ **Safety precautions.**

✓ **Get access.**

✓ **Aircraft maintenance configuration.**

...

✓ **Procedure**

...

✓ **Functional test of the bleed transferred pressure transducer.**

...

Close-up

...

✓ **Aircraft maintenance configuration.**

⇨ **Do the BITE test of the BMC.**

✓ Press the TEST key on the corresponding BMC page of the MCDU.

✓ Press the START TEST key and wait until the test ends.

⇨ Check that there are no maintenance messages related to the transducer.

Close access.

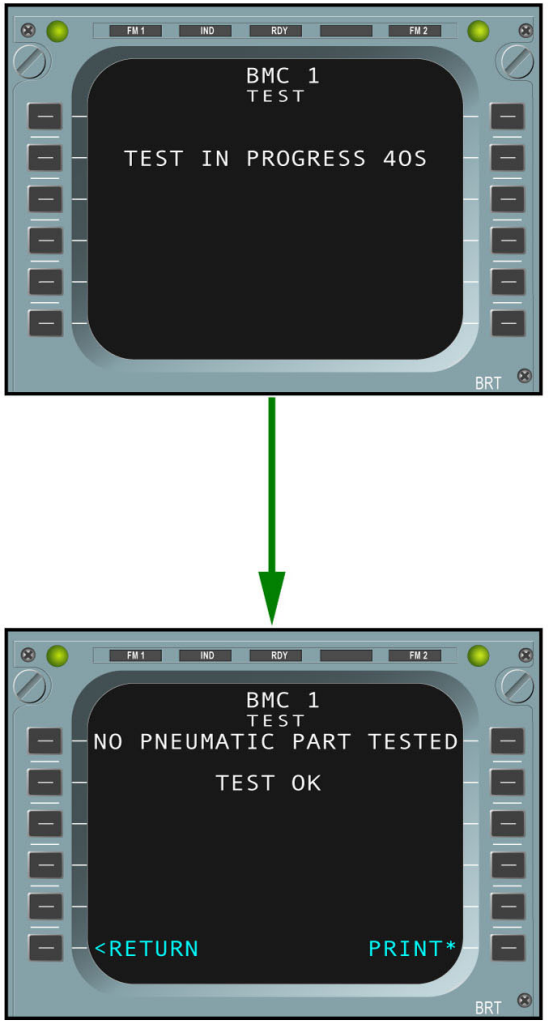

FUNCTIONAL TEST OF THE BLEED TRANSFERRED PRESSURE TRANSDUCER - CLOSE-UP

Functional Test of the Bleed Transferred Pressure Transducer

...
✓ Job set-up
...
- ✓ Safety precautions.
- ✓ Get access.
- ✓ Aircraft maintenance configuration.

...
✓ Procedure
...
- ✓ Functional test of the bleed transferred pressure transducer.

...
✓ Close-up
...
- ✓ Aircraft maintenance configuration.
- ✓ Do the BITE test of the BMC.
- ✓ Close access.

TASK COMPLETED

FUNCTIONAL TEST OF THE BLEED TRANSFERRED PRESSURE TRANSDUCER - CLOSE-UP

G7508471 - G3NT1T0 - FM36Y2BASEMCE04

AIRBUS S.A.S.
31707 BLAGNAC cedex, FRANCE
STM
REFERENCE G7508471
NOVEMBER 2008
PRINTED IN FRANCE
AIRBUS S.A.S. 2008
ALL RIGHTS RESERVED

AN EADS COMPANY

A330-200/300
TECHNICAL TRAINING MANUAL
MAINTENANCE COURSE - T1 (LVL 2&3) (RR Trent 700)
WATER/WASTE

This document must be used for training purposes only

Under no circumstances should this document be used as a reference

It will not be updated.

All rights reserved
No part of this manual may be reproduced in any form,
by photostat, microfilm, retrieval system, or any other means,
without the prior written permission of AIRBUS S.A.S.

AIRBUS Environmental Recommendation
Please consider your environmental responsability before printing this document.

WATER/WASTE

Water and Waste Line Maintenance Briefing (2) 2

POTABLE WATER

Potable Water System D/O (3) 34
Potable Water System D/O (option 3 tanks) (3) 56
Air Supply System D/O (3) 78

TOILET

Toilet System D/O (3) 82

WASTE WATER

Waste System D/O (3) 90

MAINTENANCE PRACTICE

Water and Waste MCDU Pages (2) 92

WATER AND WASTE LINE MAINTENANCE BRIEFING (2)

SYSTEM OVERVIEW

POTABLE WATER SYSTEM

Potable water is stored in two water tanks and a third one optionally. The water system supplies galleys and lavatories. The water system is pressurized by the bleed system, a dedicated compressor or a ground air pressure connection. Filling and draining are achieved from the potable water service panel and the AFT drain panel. Draining is also possible from the FWD drain panel.
The water quantity in the tanks is indicated on the Flight Attendant Panel (FAP) and optionally on the potable water service panel.

NOTE: During the servicing, the potable water system will be automatically depressurized.

G7508471 - G3NT1T0 - FM38B1000000001

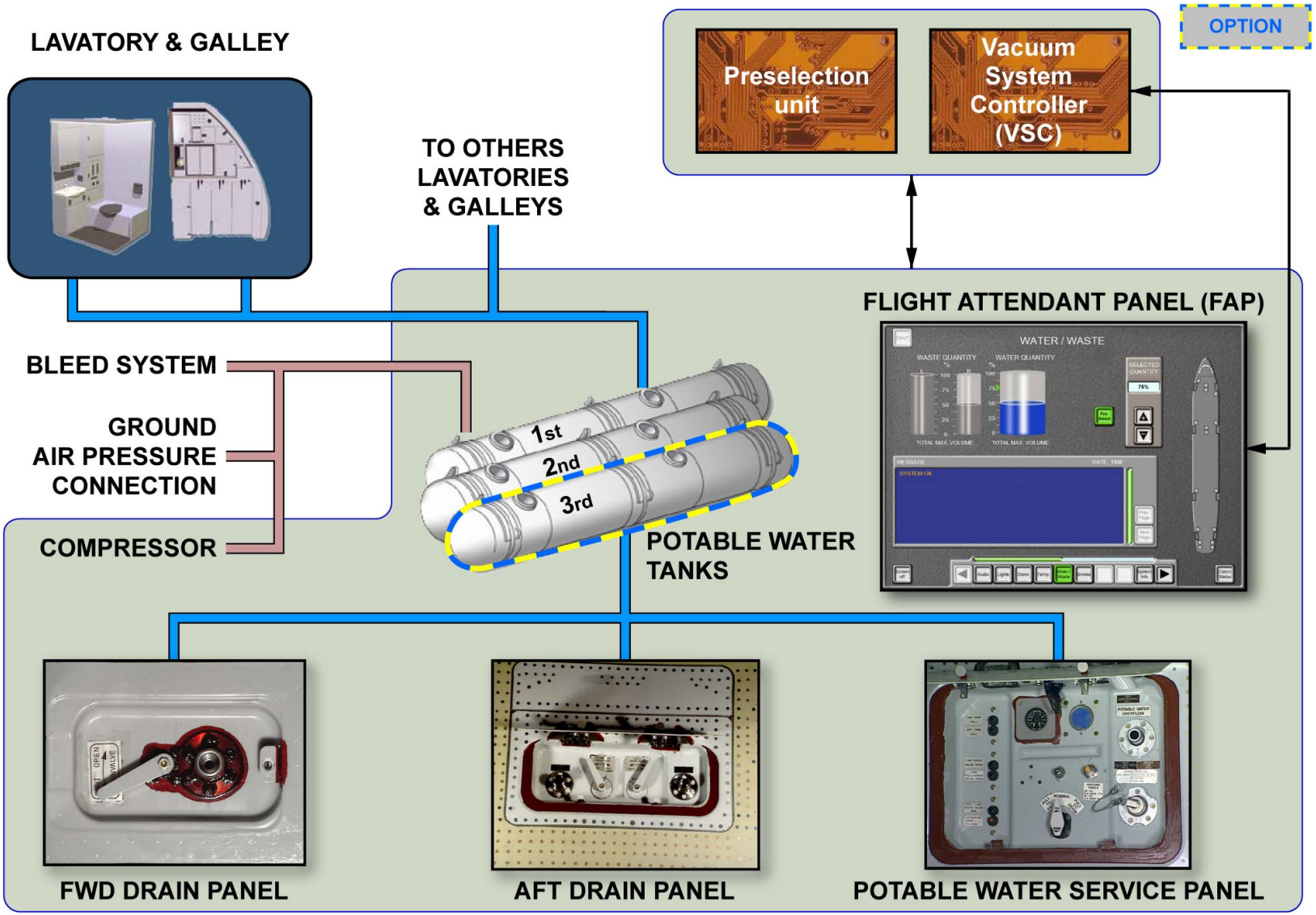

SYSTEM OVERVIEW - POTABLE WATER SYSTEM

G7508471 - G3NT1T0 - FM38B1000000001

WATER AND WASTE LINE MAINTENANCE BRIEFING (2)

SYSTEM OVERVIEW (continued)

VACUUM TOILET SYSTEM

The toilet waste system is divided into two independent parts (LH and RH sides). Two waste tanks are installed, the third one is optional. When a toilet is flushed, waste from the toilet assembly is sent to the waste tanks under the effect of differential pressure. When this differential pressure is not sufficient, a vacuum generator creates the necessary vacuum.
The waste tanks are drained from the waste service panel.
The Vacuum System Controller (VSC) controls and monitors the toilet system.
The waste level is indicated on the FAP.
The wastewater from the lavatory washbasins and galley sinks is drained overboard via heated drain masts.

NOTE: Note: Those parts of the drain and flush lines as well as valves and connections are heated.

G7508471 - G3NT1T0 - FM38B1000000001

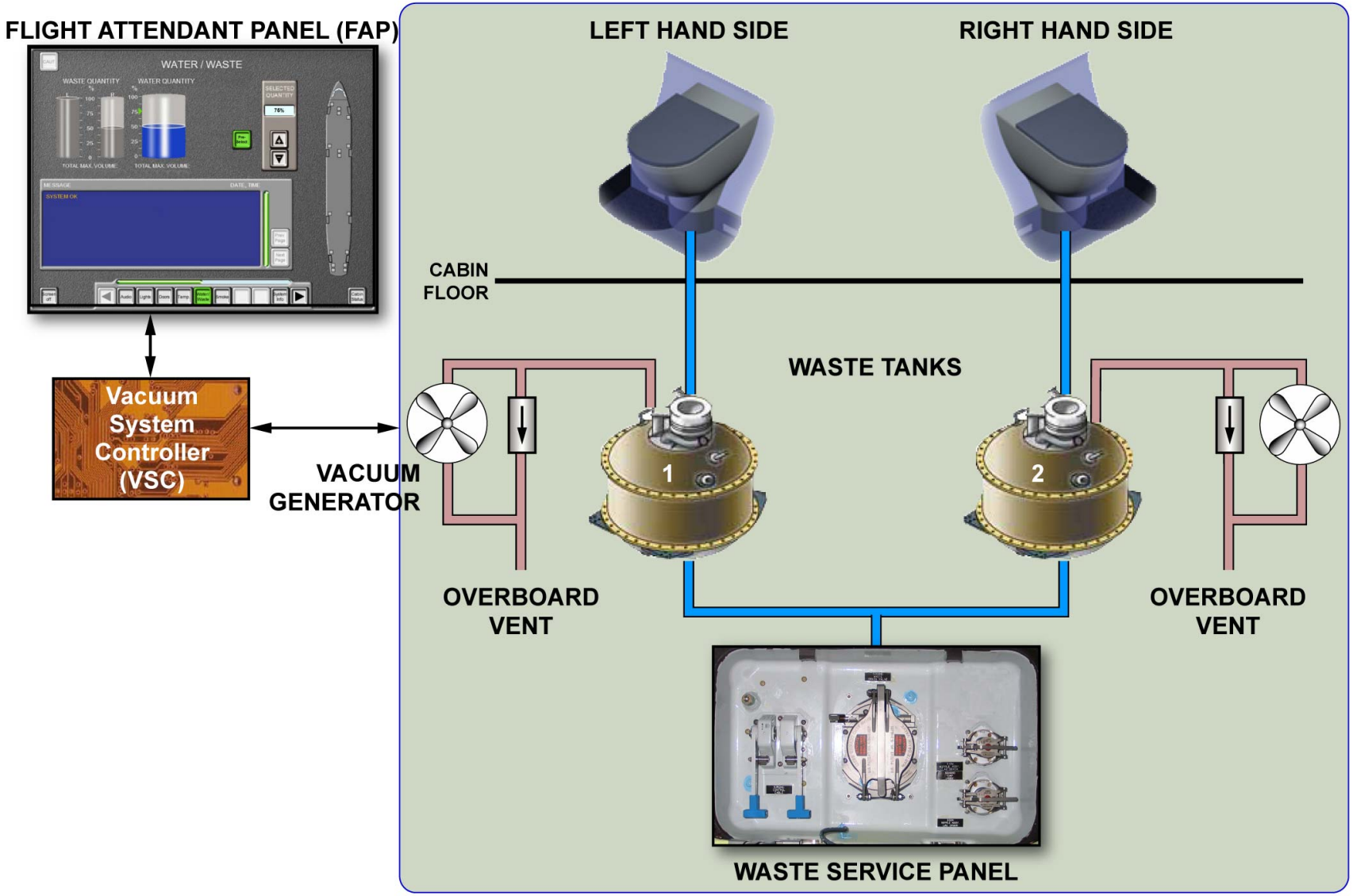

SYSTEM OVERVIEW - VACUUM TOILET SYSTEM

G7508471 - G3NT1T0 - FM38B1000000001

WATER AND WASTE LINE MAINTENANCE BRIEFING (2)

SERVICING

POTABLE WATER SYSTEM SERVICING GENERAL

The A/C Potable Water System (PWS) can be serviced with or without electrical power. Before starting the filling procedure you must refer to the cold weather maintenance practice and if necessary do a pre-conditioning procedure.

WARNING: MAKE SURE THAT THE EQUIPMENT USED FOR THIS PROCEDURE IS CLEAN AND ADAPTED TO THE PWS. IF NOT, IT CAN CONTAMINATE THE PWS.

G7508471 - G3NT1T0 - FM38B1000000001

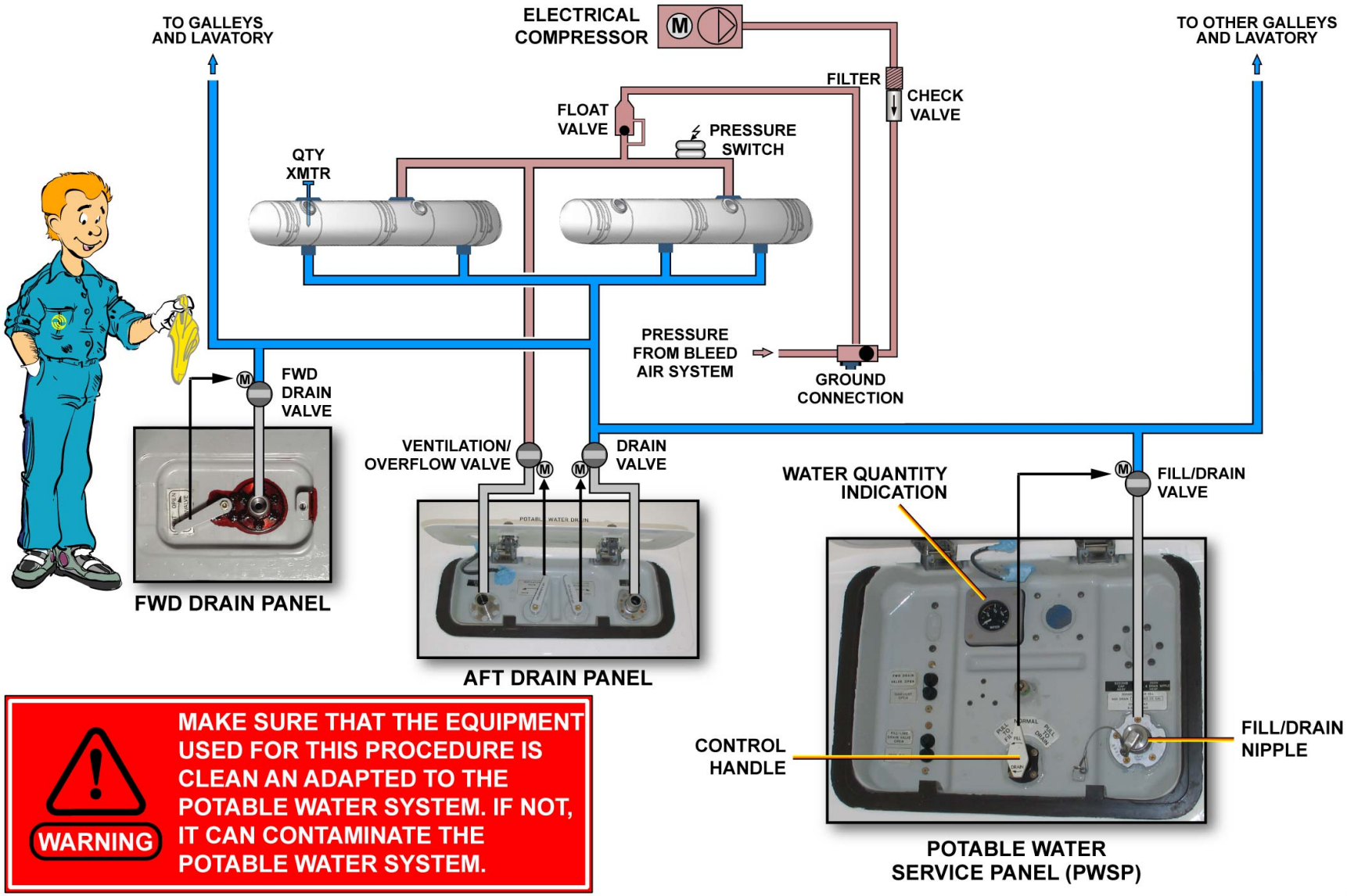

WARNING

MAKE SURE THAT THE EQUIPMENT USED FOR THIS PROCEDURE IS CLEAN AN ADAPTED TO THE POTABLE WATER SYSTEM. IF NOT, IT CAN CONTAMINATE THE POTABLE WATER SYSTEM.

SERVICING - POTABLE WATER SYSTEM SERVICING GENERAL

WATER AND WASTE LINE MAINTENANCE BRIEFING (2)

SERVICING (continued)

POTABLE WATER SYSTEM FILLING PROCEDURE (WITH ELECTRICAL POWER)

Filling with electrical power is done through:
- the FAP,
- the PWSP.

Before opening the service panel, the required quantity is pre-selected on the FAP (25%, 50%, 75% or 100%), using the Pre-Select P/B.

WARNING: DO NOT DO WORK ON THE TOILET WASTE SYSTEM AND THE POTABLE WATER SYSTEM AT THE SAME TIME. THIS WILL PREVENT CONTAMINATION OF THE POTABLE WATER SYSTEM. SUCH CONTAMINATION CAN BE DANGEROUS TO THE HEALTH.
BEFORE YOU DO WORK ON THE POTABLE WATER SYSTEM, CLEAN YOUR HANDS WITH SOAP AND WATER. THIS WILL PREVENT INFECTION (CONTAMINATION FROM TOILET WASTE IS DANGEROUS TO THE HEALTH).
MAKE SURE THAT THE EQUIPMENT YOU USE FOR THIS PROCEDURE IS CLEAN AND APPROVED FOR THE POTABLE WATER SYSTEM. IF NOT IT CAN CAUSE CONTAMINATION OF THE POTABLE WATER SYSTEM.

Connect the fill line to the fill/drain port on the service panel. Water filling is selected on the service panel using a control handle. During filling, the pressure must not exceed 125 psi.
When the pre-selected quantity is reached, the handle will be automatically reset. The procedure can be stopped at any time through manual operation of the control handle.

NOTE: The Potable Water Service Panel has control lights, which indicate the valves position, failures and refilling completed. This service panel is different if 3 tanks are installed.

Cross-check the water level indication on both the quantity indicator and the FAP. Make sure that this indication complies with the pre-selected quantity value. Disconnect the servicing cart hose from the fill/drain nipple. Clean, dry and close the service panel.

NOTE: To reduce the possibility of microbiological organism multiplication in the potable water, disinfection of the potable water system must be done at appropriate interval according to national requirements or MPD (every 2.800 FH).

G7508471 - G3NT1T0 - FM38B1000000001

1 Select "Pre-Select" level on the FAP.
NOTE: Preselection must be done before opening the service panel door.

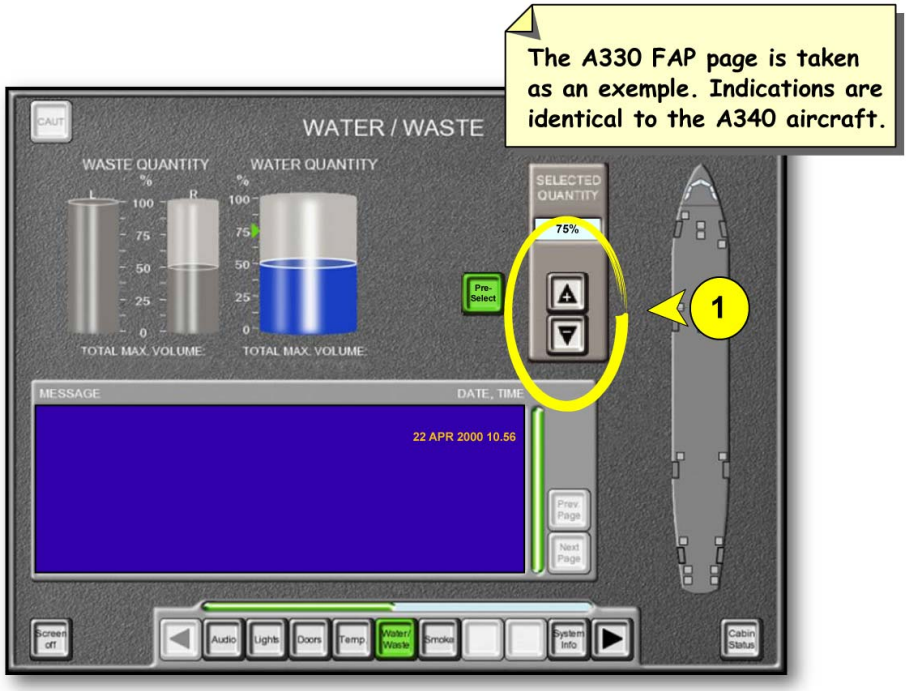

FAP

2 Open the service panel and connect servicing cart to the fill/drain nipple.

3 Turn the control handle from NORMAL to PULL TO FILL.

The A330 FAP page is taken as an exemple. Indications are identical to the A340 aircraft.

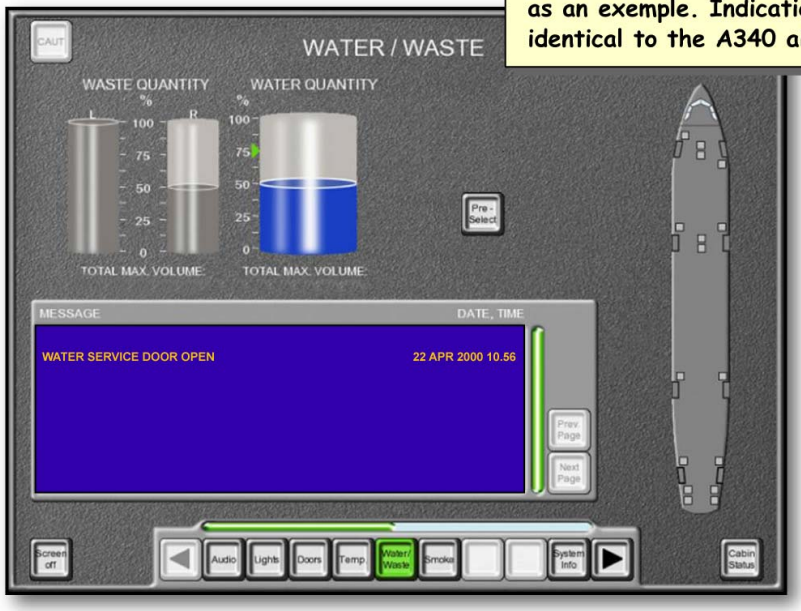

FAP

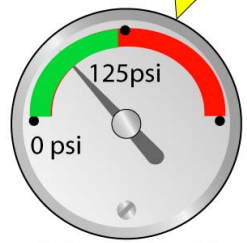

125 psi MAX

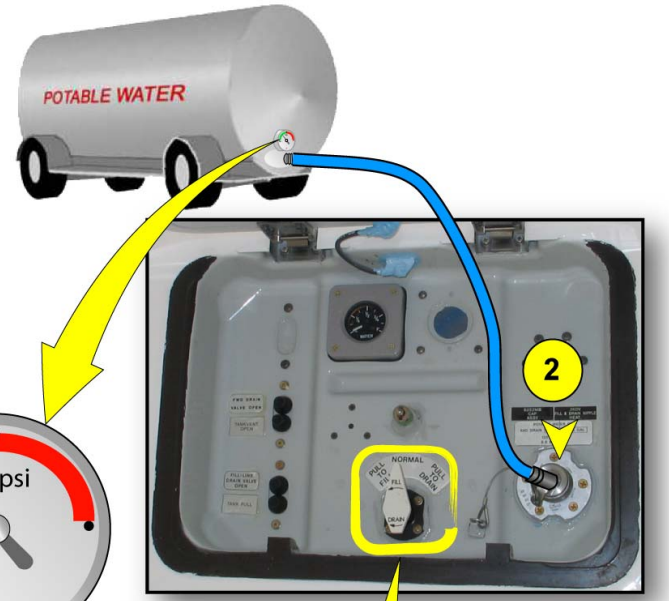

POTABLE WATER SERVICE PANEL (PWSP)

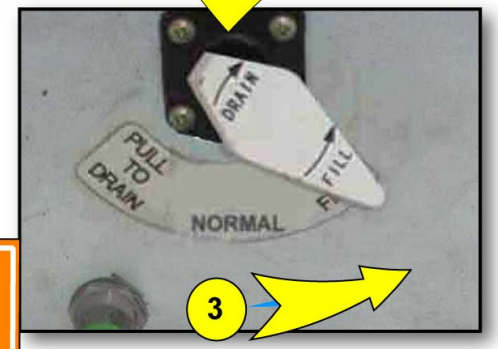

(MANUAL)

CAUTION

DO NOT LET THE WATER PRESSURE BE MORE THAN THE SPECIFIED VALUES.

SERVICING - POTABLE WATER SYSTEM FILLING PROCEDURE (WITH ELECTRICAL POWER)

4 Confirm when the set value is reached, the control handle goes automatically back to the NORMAL position.

5 Make sure that the actual quantity indication on the FAP is the same as the set quantity indication.

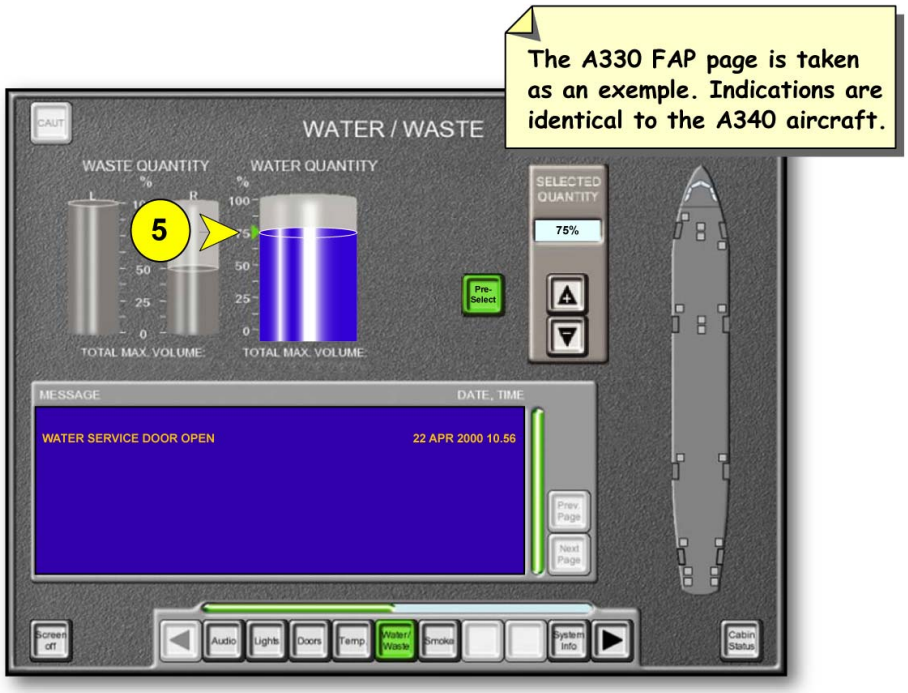

FAP

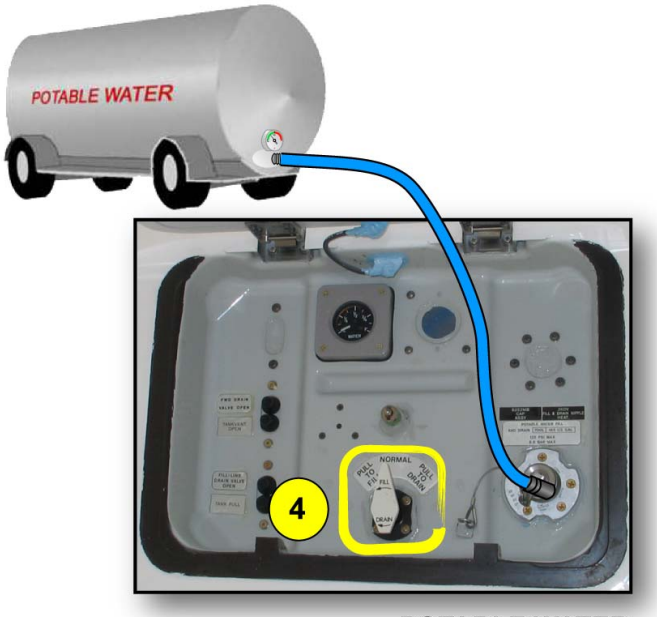

POTABLE WATER SERVICE PANEL (PWSP)

QUANTITY INDICATOR

SERVICING - POTABLE WATER SYSTEM FILLING PROCEDURE (WITH ELECTRICAL POWER)

WATER AND WASTE LINE MAINTENANCE BRIEFING (2)

SERVICING (continued)

POTABLE WATER SYSTEM FILLING PROCEDURE (WITHOUT ELECTRICAL POWER)

When filling without electrical power, apply the same precautions and cleanliness procedures as described during filling with electrical power. Open the doors of the PWSP and the AFT drain panel. Connect the fill hose of the water service vehicle to the fill/ drain port. Connect hoses to the ventilation/overflow ports on the AFT drain panel and put containers in position.

On the AFT drain panel, turn the ventilation/overflow drain valve handle to the OPEN position, then the ventilation/overflow valve opens.

On the PWSP, turn the fill/drain valve control handle to the PULL TO FILL position and pull it out to the mechanical stop, then the fill/drain valve opens. Operate the water service vehicle at a pressure of 125 psi to fill the tanks. When the water flows from the ventilation/overflow port on the AFT drain panel, the tanks are full. Turn the the ventilation/overflow ports on the AFT drain panel to the SHUT position then put the fill/drain valve handle to the CLOSE position.

Switch off the water supply and disconnect the hoses. Put a cap on the fill/drain port on the PWSP. Clean and dry the panels and make sure that no leaks are visible. Close the service panel doors. Remove all equipment and ground support.

G7508471 - G3NT1T0 - FM38B1000000001

1. On the AFT drain panel, turn the VENTILATION/OVERFLOW valve to the OPEN position.
2. On the PWSP, turn the FILL/DRAIN valve control handle to PULL TO FILL position and pull it out to the mechanical stop.
3. Operate the water service vehicle at a pressure of 125 psi to fill the tanks.
4. When the water flows from the overflow port on the AFT drain panel, the tanks are full. Turn the VENTILATION/OVERFLOW valve handle to the CLOSE position, and the FILL/DRAIN valve control to the NORMAL position on the PWSP.

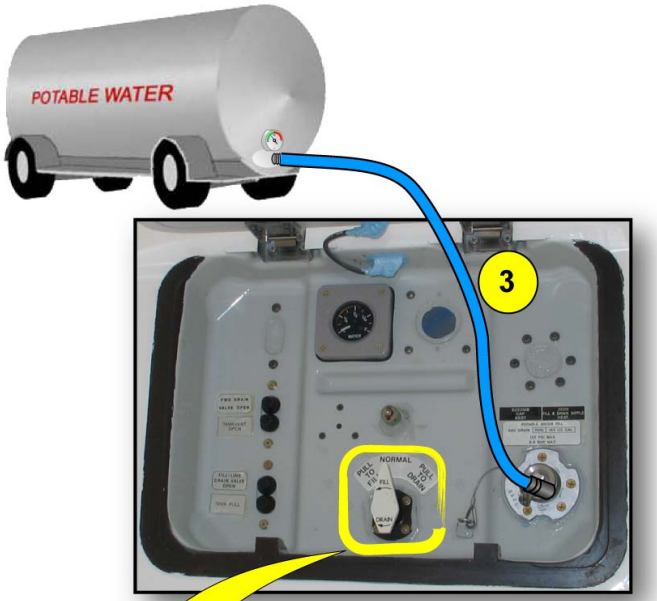

POTABLE WATER SERVICE PANEL (PWSP)

AFT DRAIN PANEL

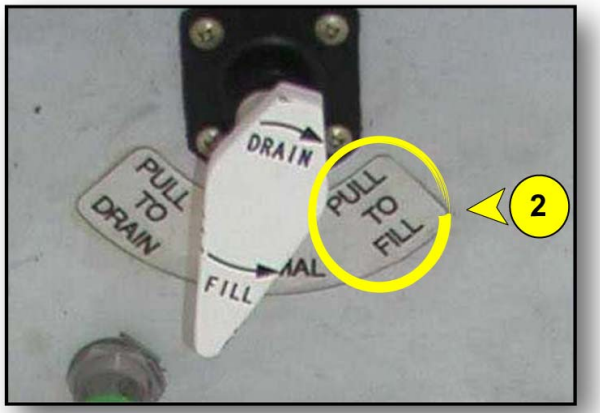

SERVICING - POTABLE WATER SYSTEM FILLING PROCEDURE (WITHOUT ELECTRICAL POWER)

WATER AND WASTE LINE MAINTENANCE BRIEFING (2)

SERVICING (continued)

POTABLE WATER SYSTEM DRAINING PROCEDURE (WITH ELECTRICAL POWER)

To collect the water, put a container below each drain port or connect drain hoses:
- on the PWSP to the fill/drain nipple,
- on the AFT drain panel to the drain nipple (if only two potable water tanks are installed),
- on the FWD potable water drain panel to the drain nipple.

On the PWSP, when the fill/drain valve control handle is turned from the NORMAL to the DRAIN position, the fill/drain valve open. On the AFT drain panel the ventilation/overflow valve and the drain valve open electrically, as well as the FWD drain valve on the FWD drain panel. Then, "FILL-LINE DRAIN VALVE OPEN", the "FWD DRAIN VALVE OPEN" and the "TANK VENT OPEN" control lights come on.

Water drains from the AFT drain port on the AFT drain panel and from the drain port on the FWD drain panel.

When draining is complete, the fill/drain control handle must be placed back in the NORMAL position. The FWD drain valve, the AFT drain valve and the fill/drain valve close. The ventilation/overflow valve also closes automatically. The "FILL-LINE DRAIN VALVE OPEN", the "FWD DRAIN VALVE OPEN" and the "TANK VENT OPEN" control lights go off.

Remove the draining equipment on the FWD drain panel and AFT drain panel, then close up the access doors.

G7508471 - G3NT1T0 - FM38B1000000001

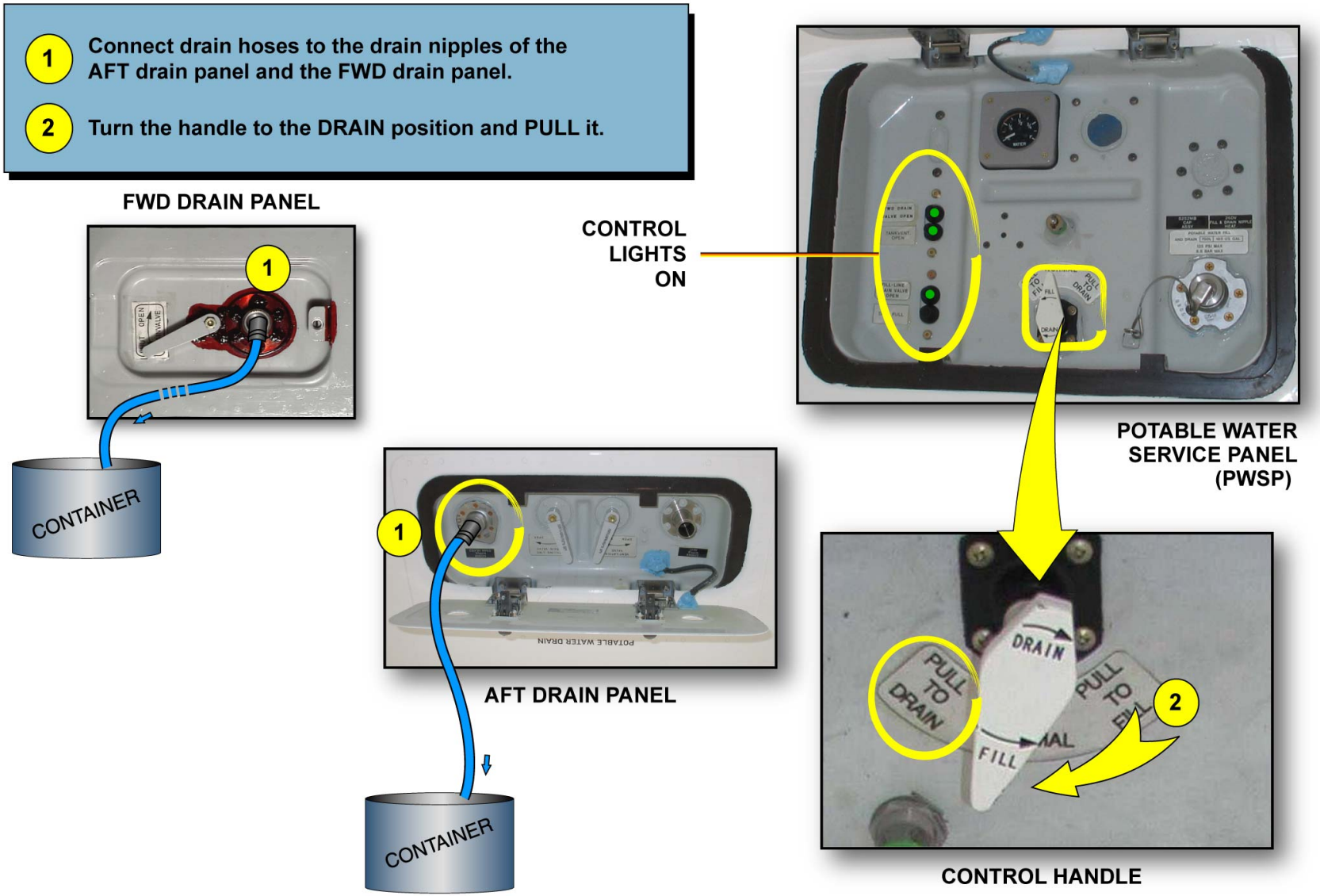

SERVICING - POTABLE WATER SYSTEM DRAINING PROCEDURE (WITH ELECTRICAL POWER)

3 Place back the control handle to the NORMAL position.

4 On the PWSP, the valve control lights go off.

FWD DRAIN PANEL

CONTROL LIGHTS OFF

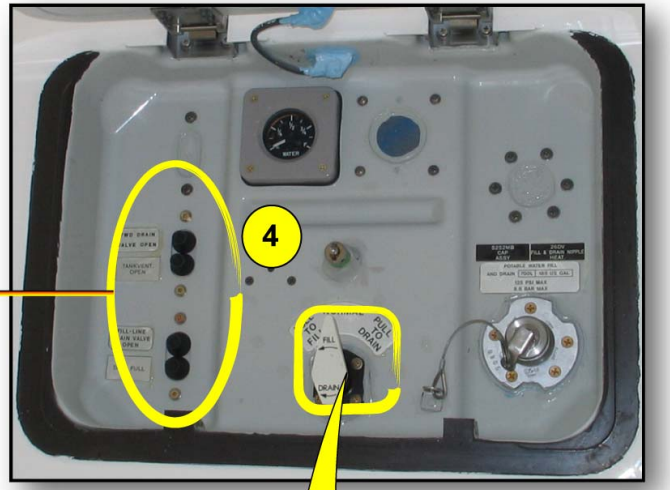

POTABLE WATER SERVICE PANEL (PWSP)

AFT DRAIN PANEL

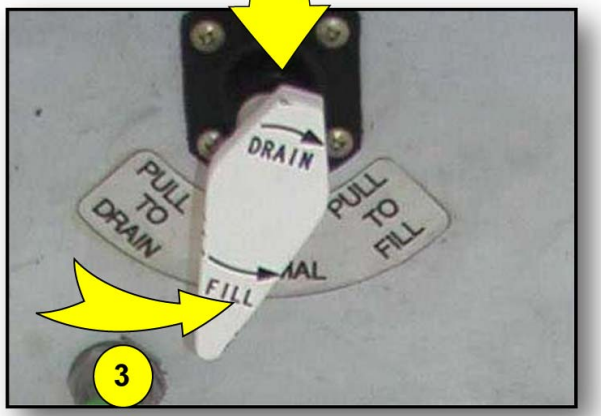

CONTROL HANDLE

SERVICING - POTABLE WATER SYSTEM DRAINING PROCEDURE (WITH ELECTRICAL POWER)

G7508471 - G3NT1T0 - FM38B1000000001

5 Close-up

TASK COMPLETED

SERVICING - POTABLE WATER SYSTEM DRAINING PROCEDURE (WITH ELECTRICAL POWER)

WATER AND WASTE LINE MAINTENANCE BRIEFING (2)

SERVICING (continued)

POTABLE WATER SYSTEM DRAINING PROCEDURE (WITHOUT ELECTRICAL POWER)

To collect the water, put a container below each drain port or connect drain hoses. The fill/drain valve control handle is manually set from the NORMAL to the DRAIN position. Pull it out to the mechanical stop to open the fill/drain valve. Afterwards, on the AFT drain panel, the ventilation/overflow valve and the drain valve are set to the OPEN position using the control handles. Water drains from the drain port of the AFT drain panel.

Finally, the FWD drain valve is opened manually using the control handle on the FWD drain panel. Water drains from the drain port on the FWD drain panel. On the PWSP, no indication is given on the valves position.

When draining is complete, all drain valves set to the SHUT position then the control lever of the fill/drain valve must be manually turned to the NORMAL position.

If a third tank is installed, the draining procedure is identical but the PWSP also has a ventilation/overflow SOV, which is set to OPEN position to vent the third tank. With three potable water tanks, two additional FWD and AFT tank SOV are used to drain the potable water system.

G7508471 - G3NT1T0 - FM38B1000000001

1. Connect drain hoses from water container to the drain nipples of the AFT drain panel and the FWD drain panel.
2. Turn the control handles from the NORM to DRAIN position on the PSWP.
3. Turn the drain valve and ventilation/overflow valve handles to OPEN on the AFT and FWD drain panel .

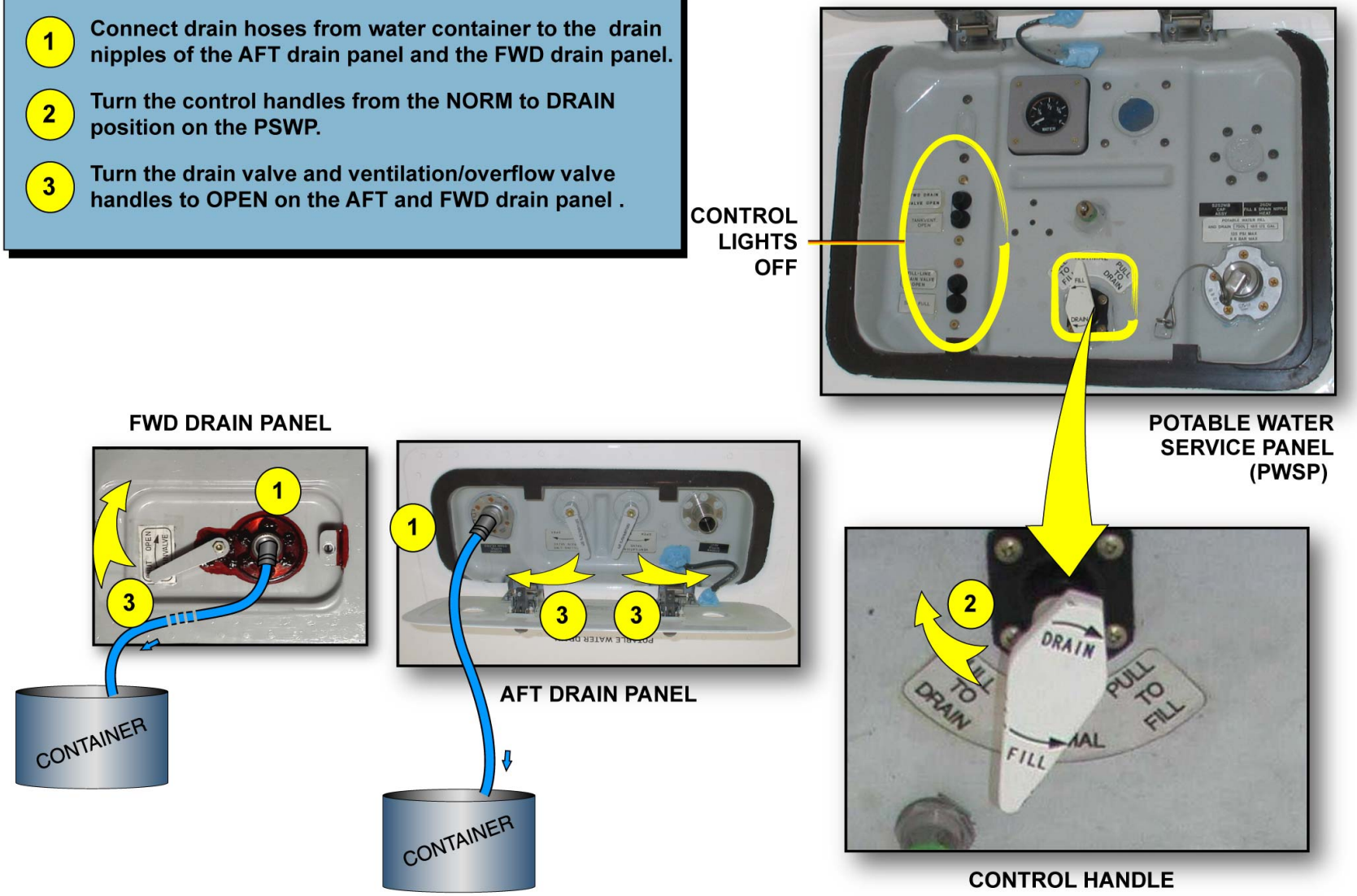

SERVICING - POTABLE WATER SYSTEM DRAINING PROCEDURE (WITHOUT ELECTRICAL POWER)

G7508471 - G3NT1T0 - FM38B1000000001

4 When draining is completed, turn all drain valve handles to the SHUT position.

5 Turn the fill/drain valve control handle to the NORM position.

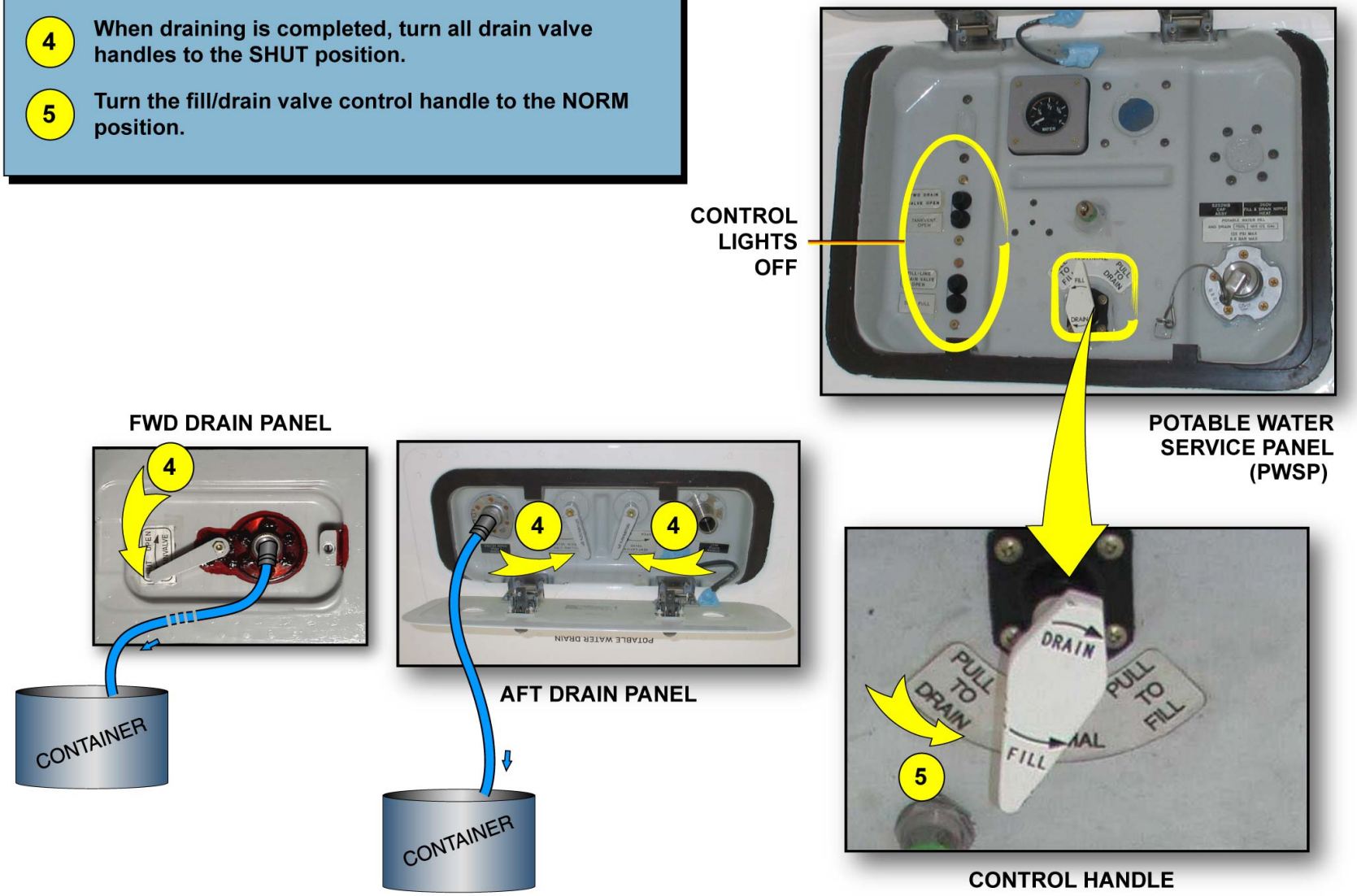

SERVICING - POTABLE WATER SYSTEM DRAINING PROCEDURE (WITHOUT ELECTRICAL POWER)

- If a third potable water tank is installed, the PWSP is different. A ventilation SOV is set to OPEN position to vent the third tank.

- An additional FWD tank SOV and a AFT tank SOV are used to drain the three tanks.

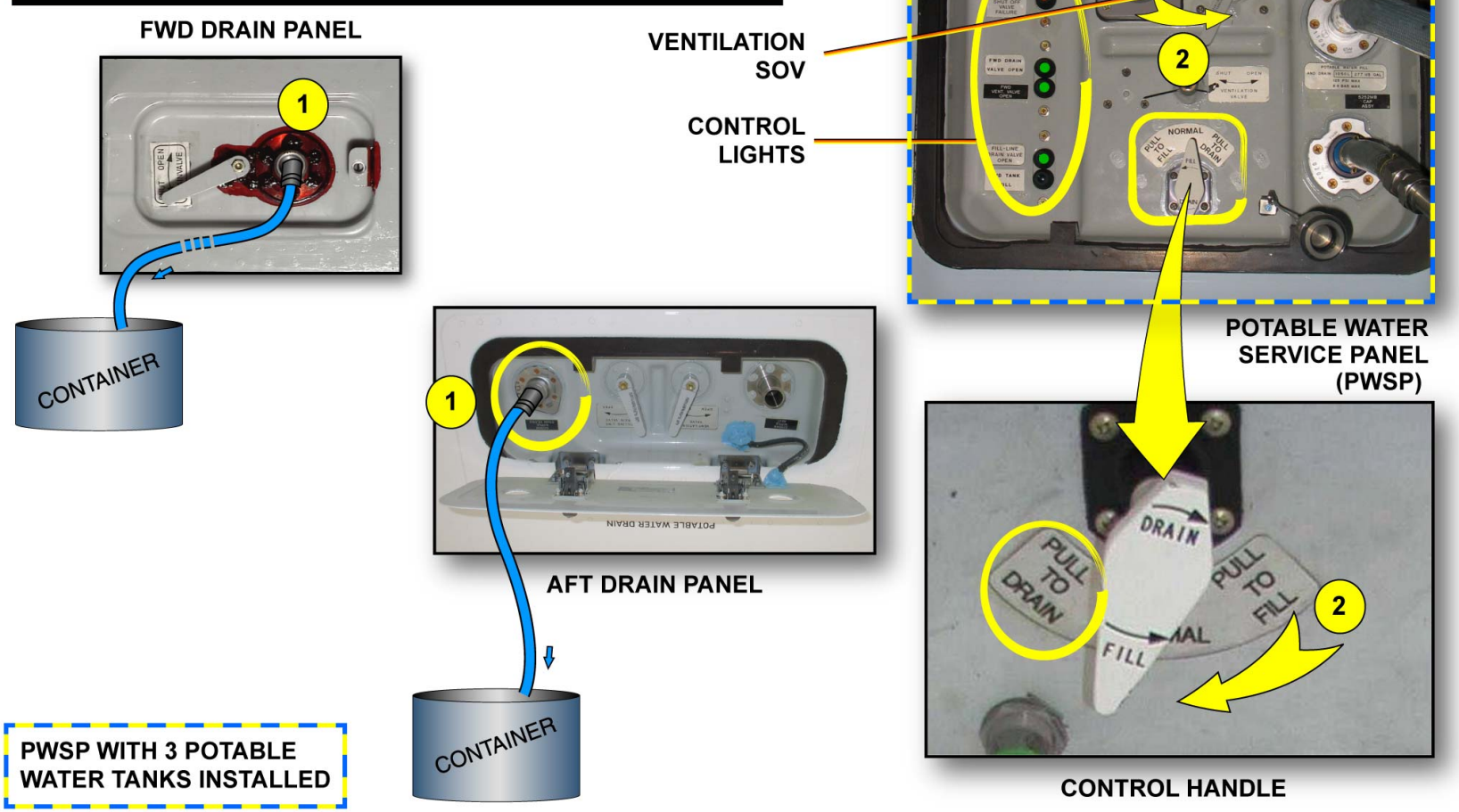

SERVICING - POTABLE WATER SYSTEM DRAINING PROCEDURE (WITHOUT ELECTRICAL POWER)

G7508471 - G3NT1T0 - FM38B1000000001

WATER AND WASTE LINE MAINTENANCE BRIEFING (2)

SERVICING (continued)

TOILET WASTE TANK SERVICING GENERAL

Servicing the A/C waste system is accomplished by draining, flushing and disinfecting. The whole procedure is done through the waste service panel.

WARNING: ALWAYS USE RUBBER GLOVES WHEN YOU DO WORK:
- ON THE TOILET WASTE SYSTEM, OR,
- ON PARTS THAT HAVE CONTAMINATION FROM THE WASTE SYSTEM.

WHEN YOU COMPLETE THE WORK PROCEDURE, CLEAN YOUR HANDS WITH SOAP AND WATER. THIS WILL PREVENT INFECTION (TOILET WASTE IS DANGEROUS FOR THE HEALTH).
DO NOT DO WORK ON THE TOILET WASTE SYSTEM AND THE POTABLE WATER SYSTEM AT THE SAME TIME. THIS WILL PREVENT CONTAMINATION OF THE POTABLE WATER SYSTEM. SUCH CONTAMINATION CAN BE DANGEROUS TO THE HEALTH.

G7508471 - G3NT1T0 - FM38B1000000001

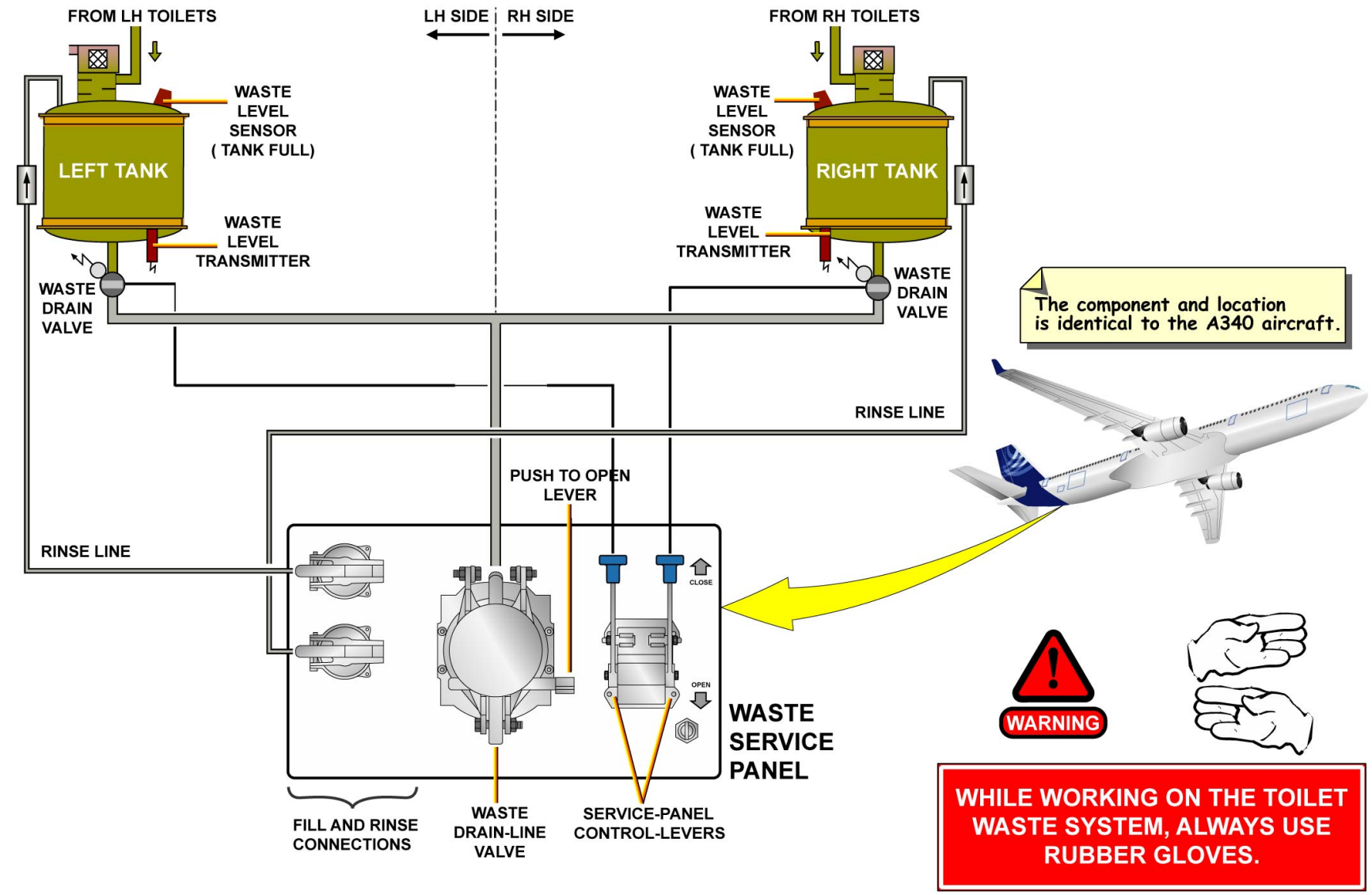

SERVICING - TOILET WASTE TANK SERVICING GENERAL

G7508471 - G3NT1T0 - FM38B1000000001

WATER AND WASTE LINE MAINTENANCE BRIEFING (2)

SERVICING (continued)

TOILET WASTE TANK SERVICING, DRAINING OF THE SYSTEM

At the waste service panel, open the cap of the waste drain line valve. Connect the waste servicing cart hose to the waste drain line connection. Set the PUSH TO OPEN lever at the waste drain line valve to OPEN. Set the service panel control levers to OPEN and let the tanks fully drain.

NOTE: When the waste service panel door is opened on ground, the limit SW sends a signal to the VSC to deactivate the toilet system.

G7508471 - G3NT1T0 - FM38B1000000001

1. Connect the toilet-servicing cart to the waste-tank drain connection.
2. Push the PUSH TO OPEN lever to open the waste drain line valve.
3. Put the waste drain valve control-levers to the OPEN position.

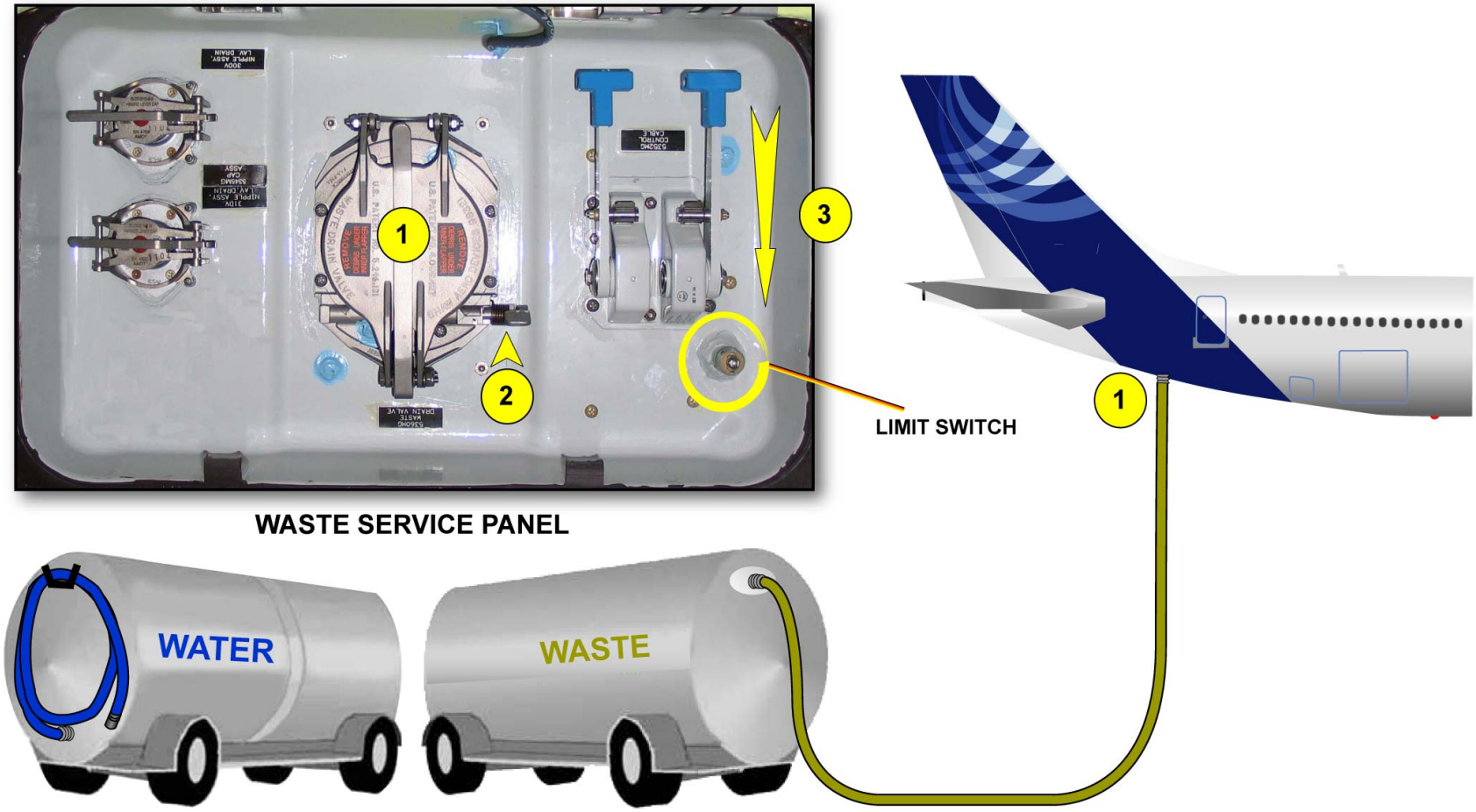

WASTE SERVICE PANEL

SERVICING - TOILET WASTE TANK SERVICING, DRAINING OF THE SYSTEM

WATER AND WASTE LINE MAINTENANCE BRIEFING (2)

SERVICING (continued)

TOILET WASTE TANK SERVICING, FLUSHING OF THE WASTE HOLDING TANKS

Connect the flush/fill hose from the water servicing cart to one fill and rinse connection. To rinse the tank with clean water, operate the cart-servicing toilet at a stable water pressure of 2.4 bar (35 psi) and stable flow rate of 38.0 l (10.0 US gal) per minute.
Flush the waste holding tank with 100 l (26.5 US gal) of water and repeat the rinsing procedure for each tank.

NOTE: During the rinse procedure, the water removes the unwanted material from the walls of the tank and the waste level sensors.

Set the service panel control levers back to CLOSE. Close the caps of the waste drain-line valve. Fill each tank with 18 l of disinfectant through its fill and rinse connection. Remove the waste drain hose, flush filling hose and close all caps and access door.
Do not discharge products such as oil, fuel, solvent, lubricant either in trash bins, soil or into the water network (drains, gutters, rain water, waste water, etc...). Sort waste fluids and use specific waste disposal containers.

G7508471 - G3NT1T0 - FM38B1000000001

4 Connect the flush/fill hose of the toilet-servicing cart to a fill and rinse connection.
Flush the waste holding tanks with 100L of water for each tank.

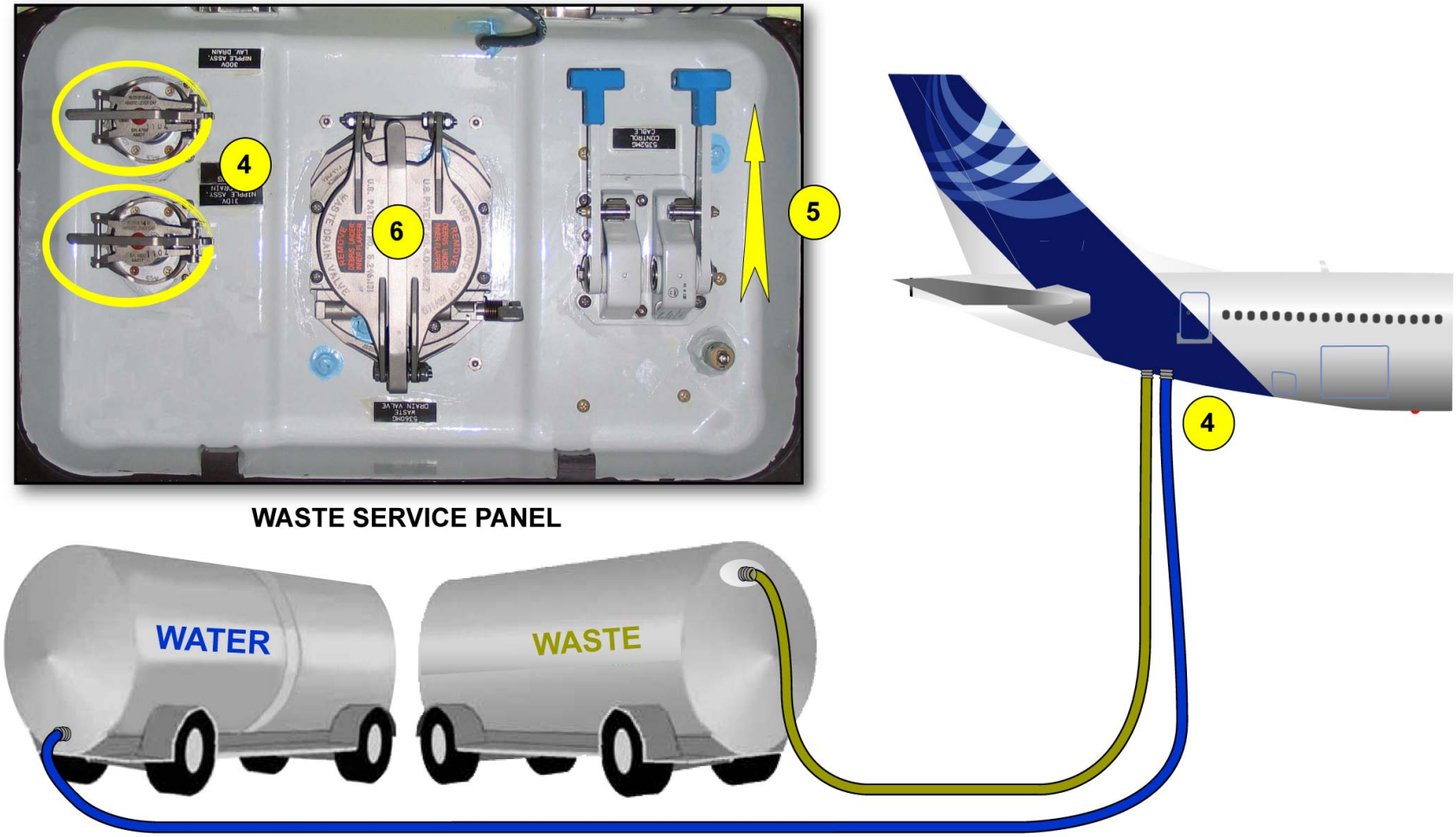

WASTE SERVICE PANEL

SERVICING - TOILET WASTE TANK SERVICING, FLUSHING OF THE WASTE HOLDING TANKS

4 Connect the flush/fill hose of the toilet-servicing cart to a fill and rinse connection.
Flush the waste holding tanks with 100L of water for each tank.

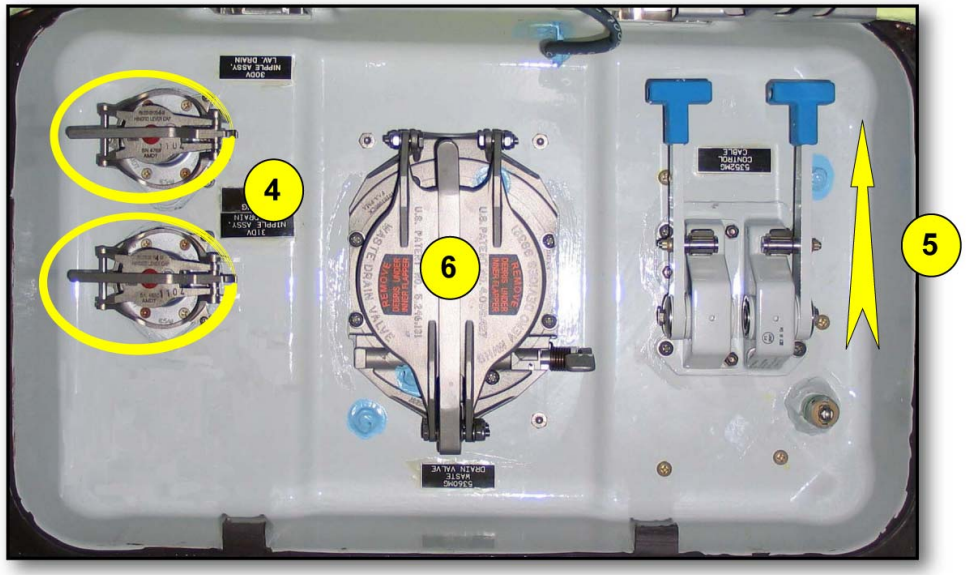

WASTE SERVICE PANEL

SERVICING - TOILET WASTE TANK SERVICING, FLUSHING OF THE WASTE HOLDING TANKS

G7508471 - G3NT1T0 - FM38B1000000001

This Page Intentionally Left Blank

G7508471 - G3NT1T0 - FM38B1000000001

WATER AND WASTE LINE MAINTENANCE BRIEFING (2)

MAINTENANCE TIPS

COLD WEATHER MAINTENANCE PRACTICES FOR WATER AND WASTE SYSTEM

In cold weather conditions the water and waste system must be drained to prevent damage to the system by ice. To decide if the water and waste system needs to be drained, we must refer to the water and waste system drain configuration table in the AMM 12-31-38. After draining of the system and parking of the aircraft at temperatures below 0 °C (32.00 °F):
- let the drain valves and the service panels stay open to let remaining fluid flow out,
- do not install the caps on the drain and the fill/drain nipples.

NOTE: Although an aircraft is resistant to very low ambient temperatures, the cabin air conditioning and WIPU system keep the pipes and water systems sufficiently warm to prevent these systems from freezing. However, when the aircraft is not energized or stays on the ground at sub-zero temperatures, you must do additional procedures to prevent damage to the systems by ice. If the service panels or caps are frozen closed, you must not use force to open or release them. You must apply hot air to melt ice.

The cold weather maintenance practices for the potable water system are given in the AMM 12-31-38.
Pre-flight (first flight of the day):
- fill the potable water system with warm potable water of 30 °C (86.00 °F) not earlier than 30 minutes before the engine start,
- remove excessive water from around the service panel before you close it,
- pre-charge the waste holding tanks not earlier than 30 minutes before the engine start. Use a cart servicing, toilet to fill each waste holding tank with 18 l (4.8 US gal) of disinfectants (Material No.14-001A),
- remove excessive liquid from around the service panel before you close it.

Post flight (Last flight of the day but not transit stops):

CAUTION: DO NOT OPEN THE ELECTRICAL DRAIN VALVES FOR LONGER THAN NECESSARY IF YOU USE THE APU OR ENGINE(S)TO PRESSURIZE THE SYSTEM. IF THE VALVES STAY OPEN TOO LONG, THE HOT BLEED AIR CAN CAUSE DAMAGE TO THE TANK QUANTITY TRANSMITTER.

If you park the aircraft at very low temperature, drain the water from the potable water system and remove the remaining water from the potable water system, as stated below:
- drain the potable water system,
- close all the lavatory and galley manual shutoff valves,
- close all the potable-water drain and fill drain valves,
- pressurize the potable water system.

To remove the remaining water from the potable water system do the procedure as follows:

NOTE: This procedure is the same for all lavatories and galleys, which have potable water supplied equipment (as there are water heater, coffeemaker and water faucet).
- open one related manual shutoff valve of one lavatory or galley,
- operate the faucet (HOT and COLD),
- make sure that air but no water comes out of the faucet,
- flush the toilet as often as necessary until you are sure that air but no water comes out of the toilet rinse valve,
- close the related manual shutoff valve,
- do the whole procedure for all lavatories and galleys which have potable-water supplied equipment.
- open all drain valves of the potable water system and release the pressure from the potable water system,
- open the manual shutoff valves in all lavatories or galleys.

If you cannot drain the potable water system, do the pre-conditioning of the aircraft according to the AMM table.

CAUTION: DO NOT OPEN THE ELECTRICAL DRAIN VALVES FOR LONGER THAN NECESSARY IF YOU USE THE APU OR ENGINE(S)TO PRESSURIZE THE SYSTEM. IF THE VALVES STAY OPEN TOO LONG, THE HOT BLEED AIR CAN CAUSE DAMAGE TO THE TANK QUANTITY TRANSMITTER.

G7508471 - G3NT1T0 - FM38B1000000001

REFERENCE AMM TABLE: 12-31-38				
CONFIGURATION			COLD SOAK TIME (HOURS:MIN)	WATER AND WASTE TANKS DRAIN
AIR CONDITIONING	AIR TEMPERATURE	OUTSIDE AIR TEMPERATURE		
ON	ABOVE 10 deg.C (50 deg.F)	BETWEEN 0 AND -15 deg.C (32 AND 5 deg.F)	ANY	NOT REQUIRED
		BELOW -15 Deg.C (5 deg.F)	1 : 15	REQUIRED
OFF		BETWEEN 0 AND -7 deg.C (32 AND 19,4 deg.F)	1 : 30	
		BETWEEN -7 AND -15 deg.C (19.4 AND 5 deg.F)	0 : 30	
		BELOW -15 Deg.C (5 deg.F)	ANY	

MAINTENANCE TIPS - COLD WEATHER MAINTENANCE PRACTICES FOR WATER AND WASTE SYSTEM

G7508471 - G3NT1T0 - FM38B1000000001

REFERENCE AMM TABLE: 12-31-38				
OUTSIDE AIR TEMPERATURE	EXTERNAL HEAT SOURCE	APU	SUPERVISOR	DRAINING OF WATER SYSTEM
0 deg.C (32 deg.F) to -5 deg.C (23 deg.F)	1 HOUR EVERY 4 HOURS	NO	NO	NO
-5 deg.C (23 deg.F) to -10 deg.C (14 deg.F)	2 HOURS EVERY 4 HOURS	NO	NO	NO
-10 deg.C (14 deg.F) to -15 deg.C (5 deg.F)	CONTINUOUS	NO	NO	NO
BELOW -15 deg.C (5 deg.F)	CONTINUOUS	AS REQUIRED	YES	YES

MAINTENANCE TIPS - COLD WEATHER MAINTENANCE PRACTICES FOR WATER AND WASTE SYSTEM

G7508471 - G3NT1T0 - FM38B1000000001

POTABLE WATER SYSTEM D/O (3)

STORAGE

Two potable water tanks are installed in the pressurized zone of the A/C in the aft cargo compartment.
The tanks have a capacity of 350 liters (92.46 US gallons). They have connections for filling, draining and distribution ports and with an overflow and venting port connected to the pressurization system. Any tank can supply water to any galley and lavatory.

G7508471 - G3NT1T0 - FM38D100000003

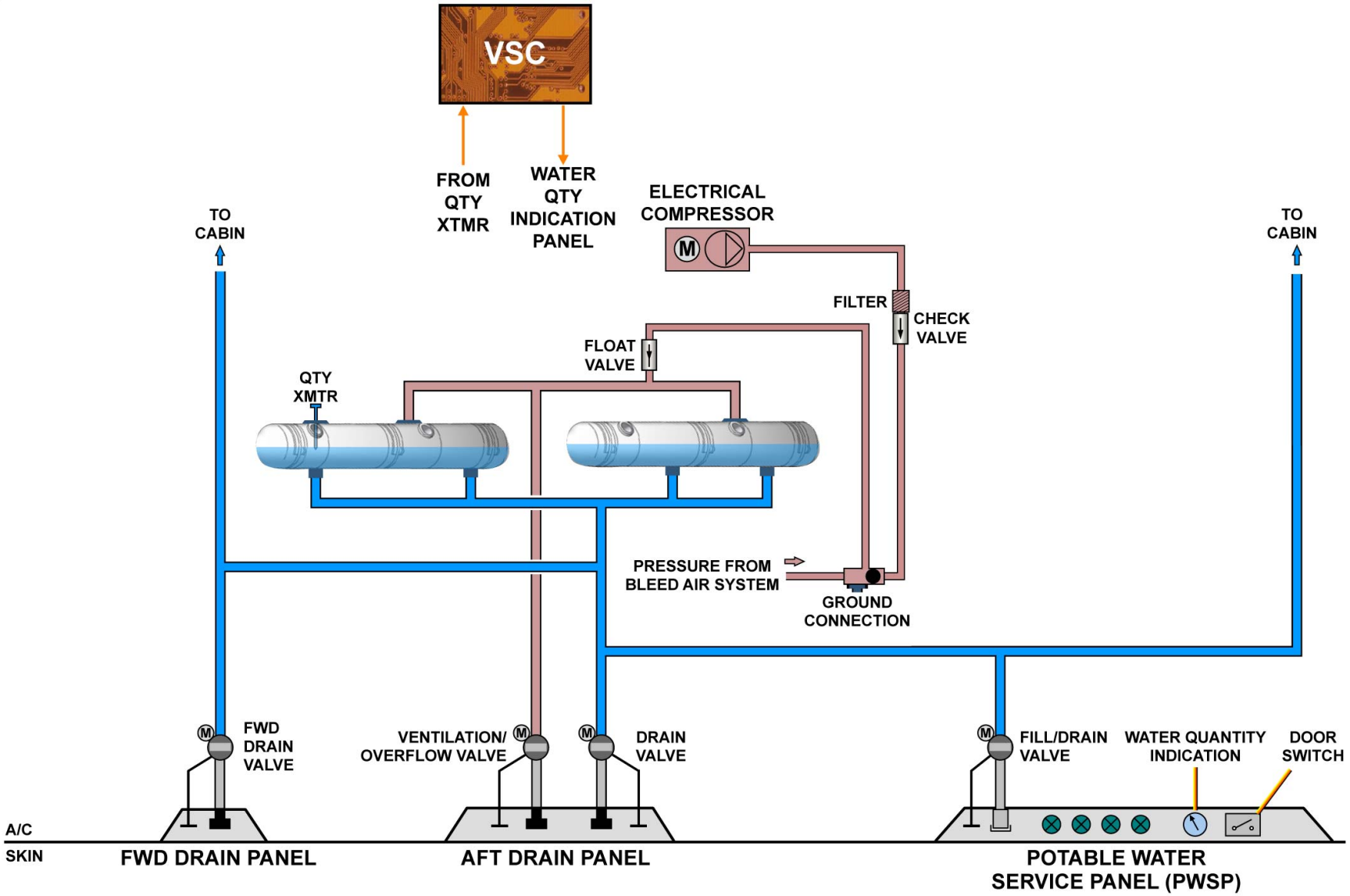

STORAGE

G7508471 - G3NT1T0 - FM38D100000003

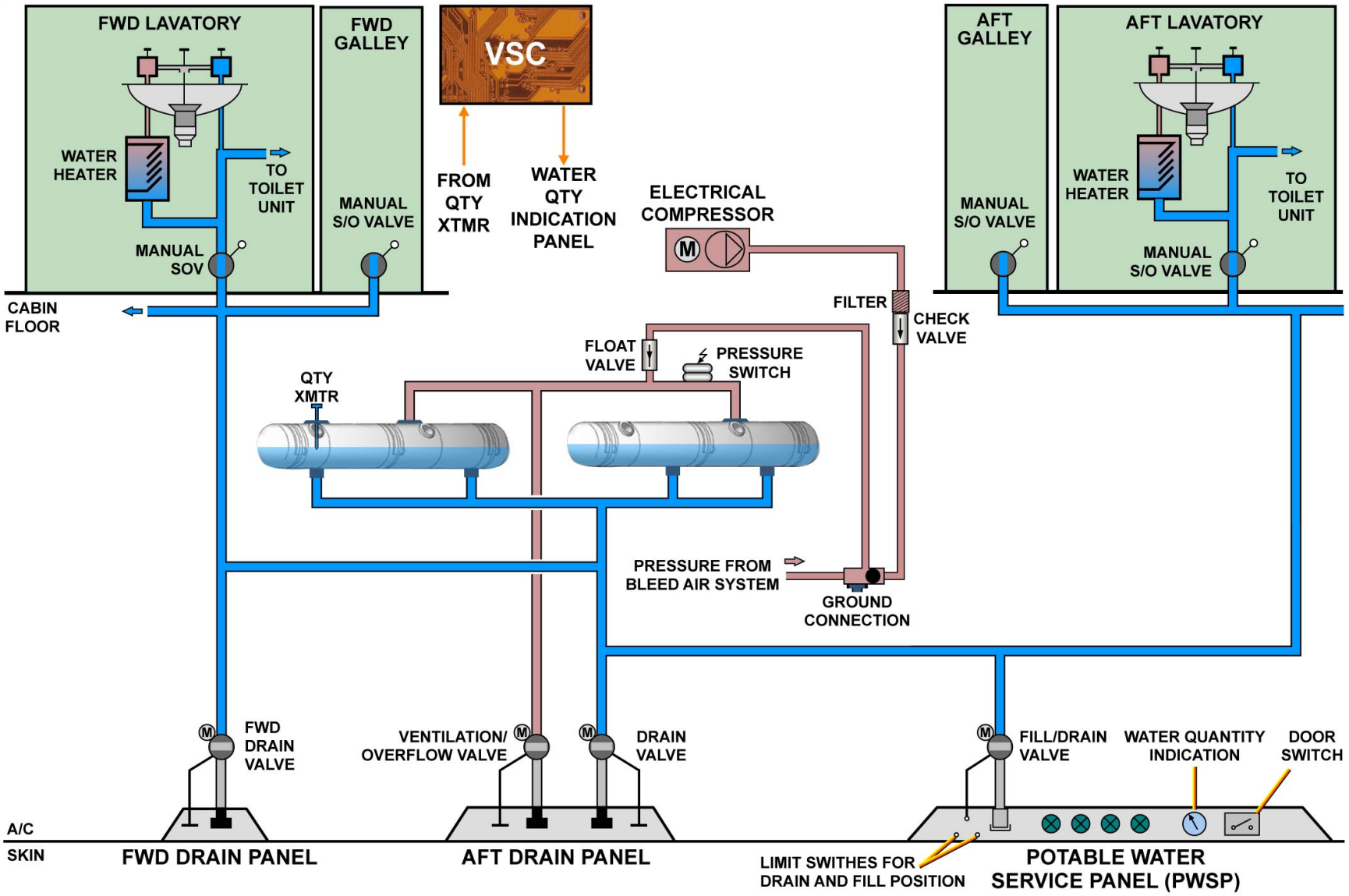

STORAGE

G7508471 - G3NT1T0 - FM38D100000003

This Page Intentionally Left Blank

G7508471 - G3NT1T0 - FM38D1000000003

POTABLE WATER SYSTEM D/O (3)

DISTRIBUTION

The lavatory and galley distribution lines run below the passenger compartment floor. They are shrouded and insulated, or insulated and heated. Manual water Shut-Off Valves (SOVs) can be manually set to close in order to isolate a lavatory or a galley.

G7508471 - G3NT1T0 - FM38D100000003

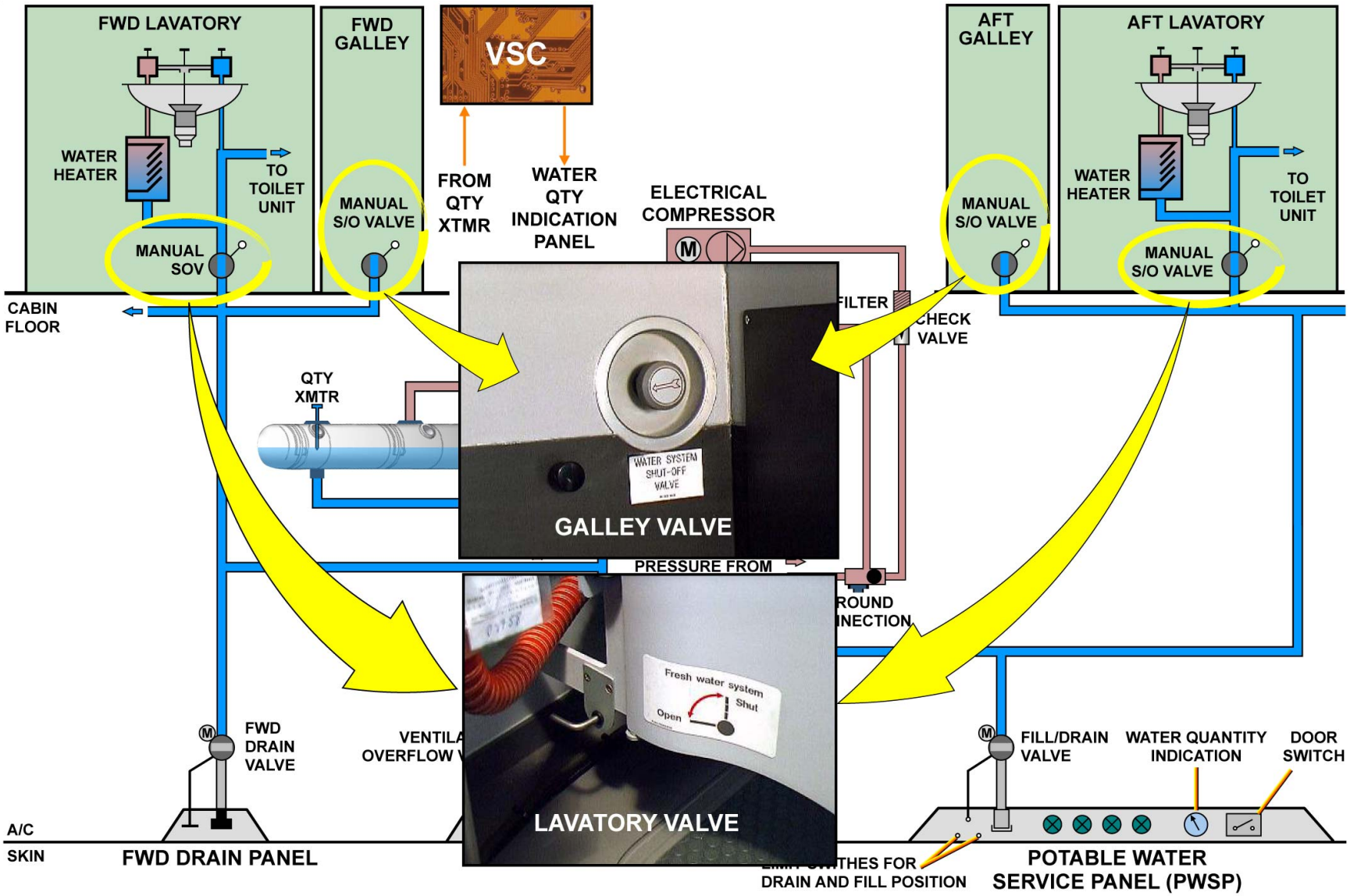

DISTRIBUTION

G7508471 - G3NT1T0 - FM38D100000003

POTABLE WATER SYSTEM D/O (3)

WATER HEATING

The water heater has a capacity of 1.5 liters (0.4 US gallons). It maintains the water temperature between 49°C (121°F) and 54°C (129°F). Water heating can be switched off by an ON/OFF toggle switch with an over-temperature switch, which operates at 77°C (171°F) and in case of low water quantity. This over-temperature switch can be reset by a P/B beneath the cover. A red indicator light shows water heating. An overpressure relief valve protects the water heater from overpressure.

G7508471 - G3NT1T0 - FM38D1000000003

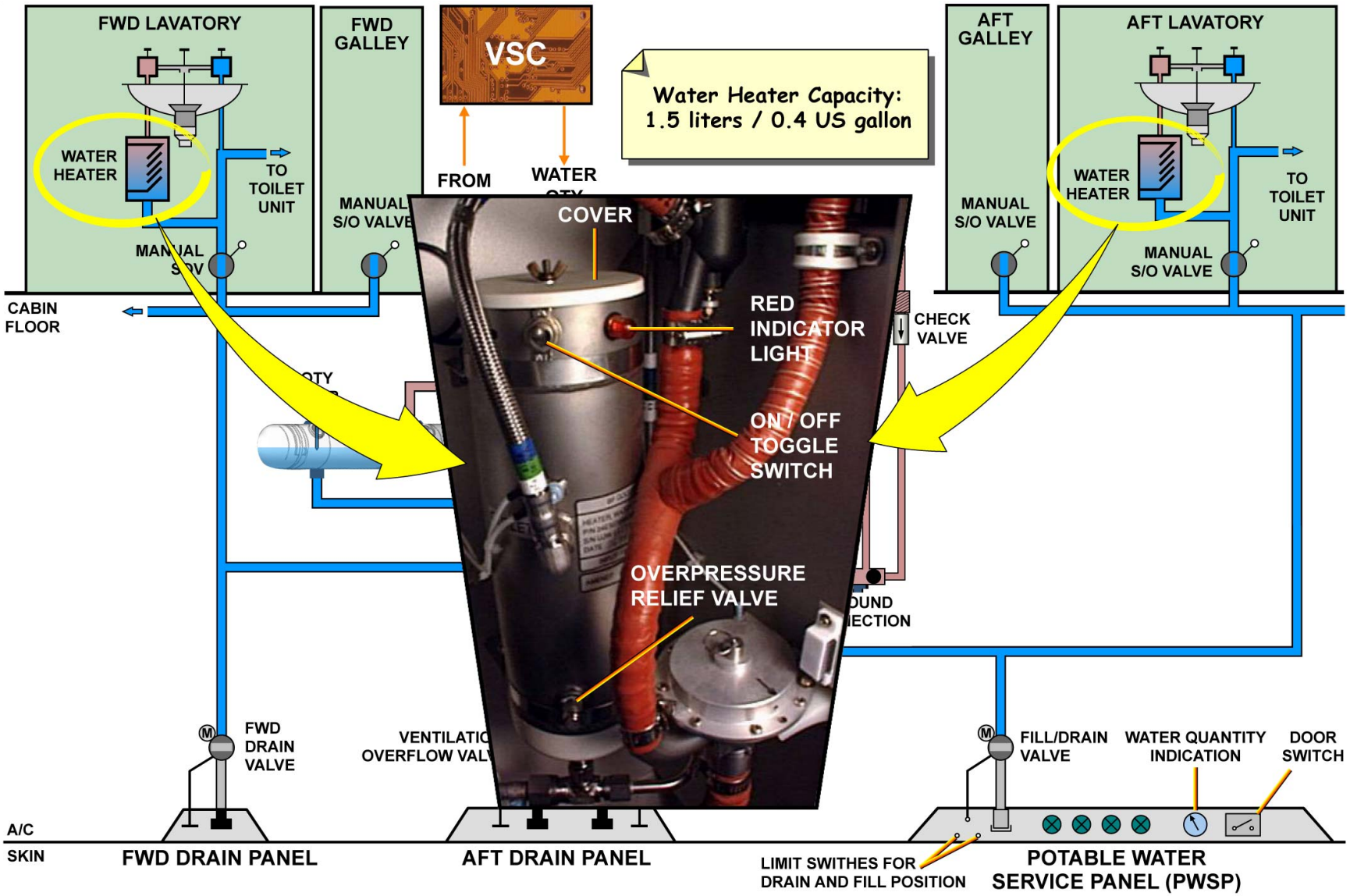

WATER HEATING

G7508471 - G3NT1T0 - FM38D100000003

POTABLE WATER SYSTEM D/O (3)

INDICATING

The first tank has an ultrasonic unit quantity transmitter, which sends signals to the Vacuum System Controller (VSC). The VSC transmits the signal directly to the water indication panel on the Potable Water Service Panel (PWSP) and through the Cabin Intercommunication Data System (CIDS) to the Flight Attendant Panel (FAP). The VSC transmits the potable water quantity pre-selection signal from the FAP to the pre-selection unit. The indication panel has an indicator. Note that the indication panel is optional.
The display unit on the FAP shows:
- the water quantity,
- the condition of the potable water system,
- the pre-selection value,
- the possible failure messages of the system.

G7508471 - G3NT1T0 - FM38D1000000003

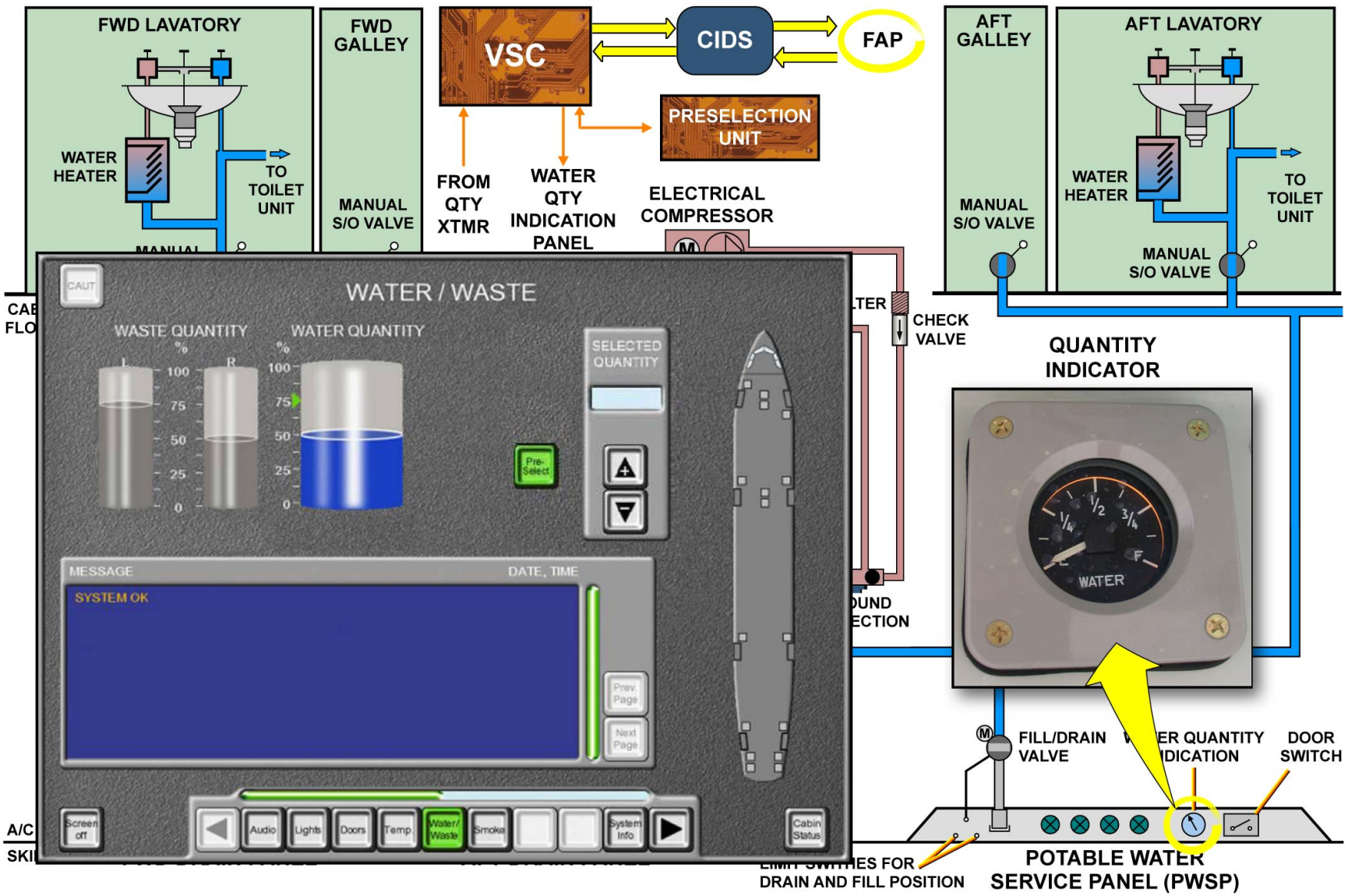

INDICATING

G7508471 - G3NT1T0 - FM38D100000003

POTABLE WATER SYSTEM D/O (3)

FILLING

Filling can be done with or without electrical power.

WITH ELECTRICAL POWER

On the FAP, the pre-selection level can be set to 25%, 50%, 75% or 100%. On the PWSP, turn the control handle from NORMAL to the FILL position. Then, fill/drain valve and the ventilation/overflow valve open electrically. The "FILL-LINE DRAIN VALVE OPEN" control light and the "TANK VENT OPEN" control lights come on. During filling, the water quantity is transmitted from the VSC to the CIDS.
When the set value is reached, the "TANK FULL " control light for the two tanks comes on.
After the two tanks have reached the set level, the fill/drain valve closes, the control handle goes back to the NORMAL position automatically, and the "FILL-LINE DRAIN VALVE OPEN" control light goes off. The ventilation/overflow valve is closed electrically and the "TANK VENT OPEN" control light also goes off on the PWSP. The potable water filling is completed.

G7508471 - G3NT1T0 - FM38D1000000003

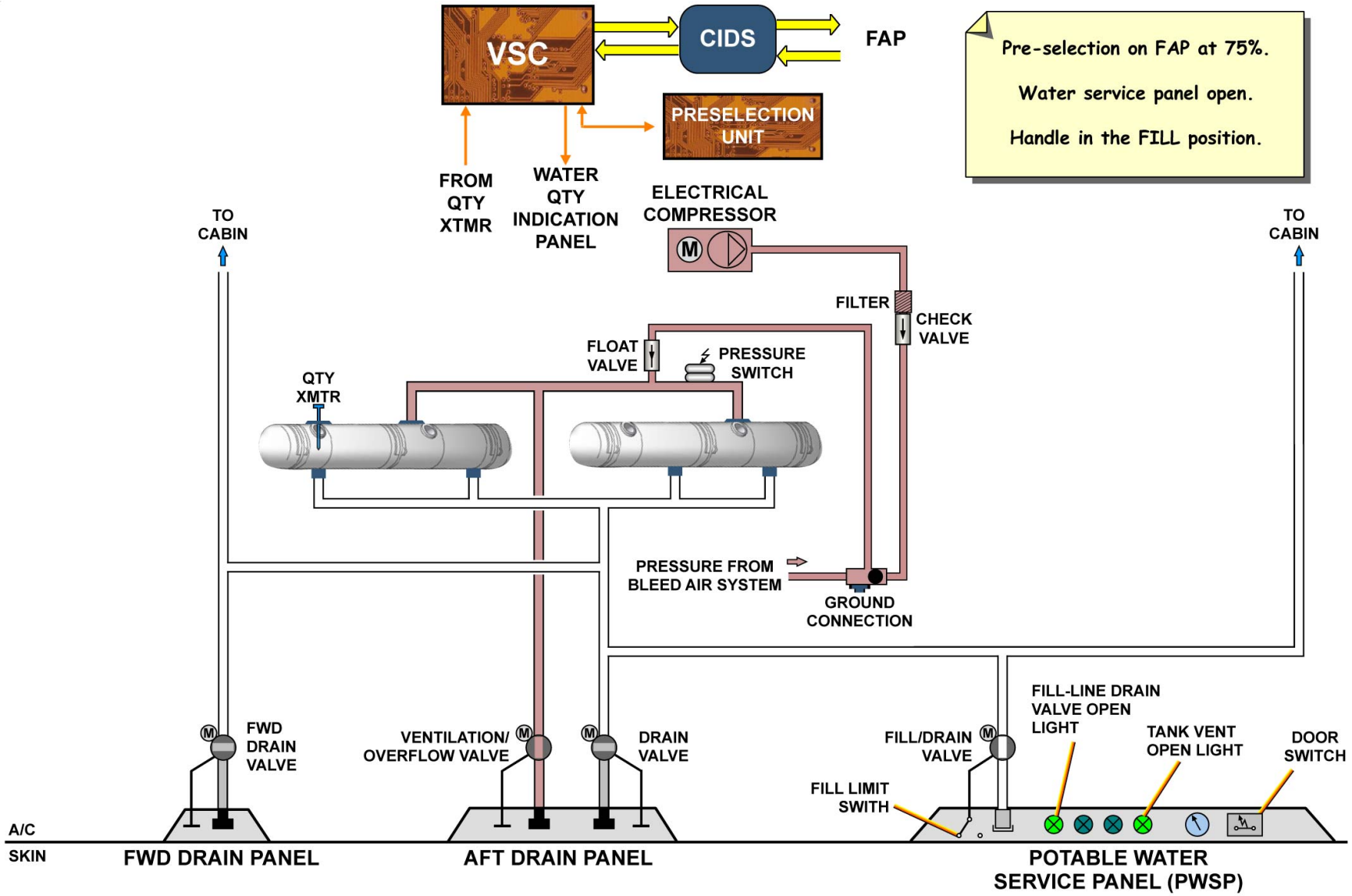

FILLING - WITH ELECTRICAL POWER

G7508471 - G3NT1T0 - FM38D100000003

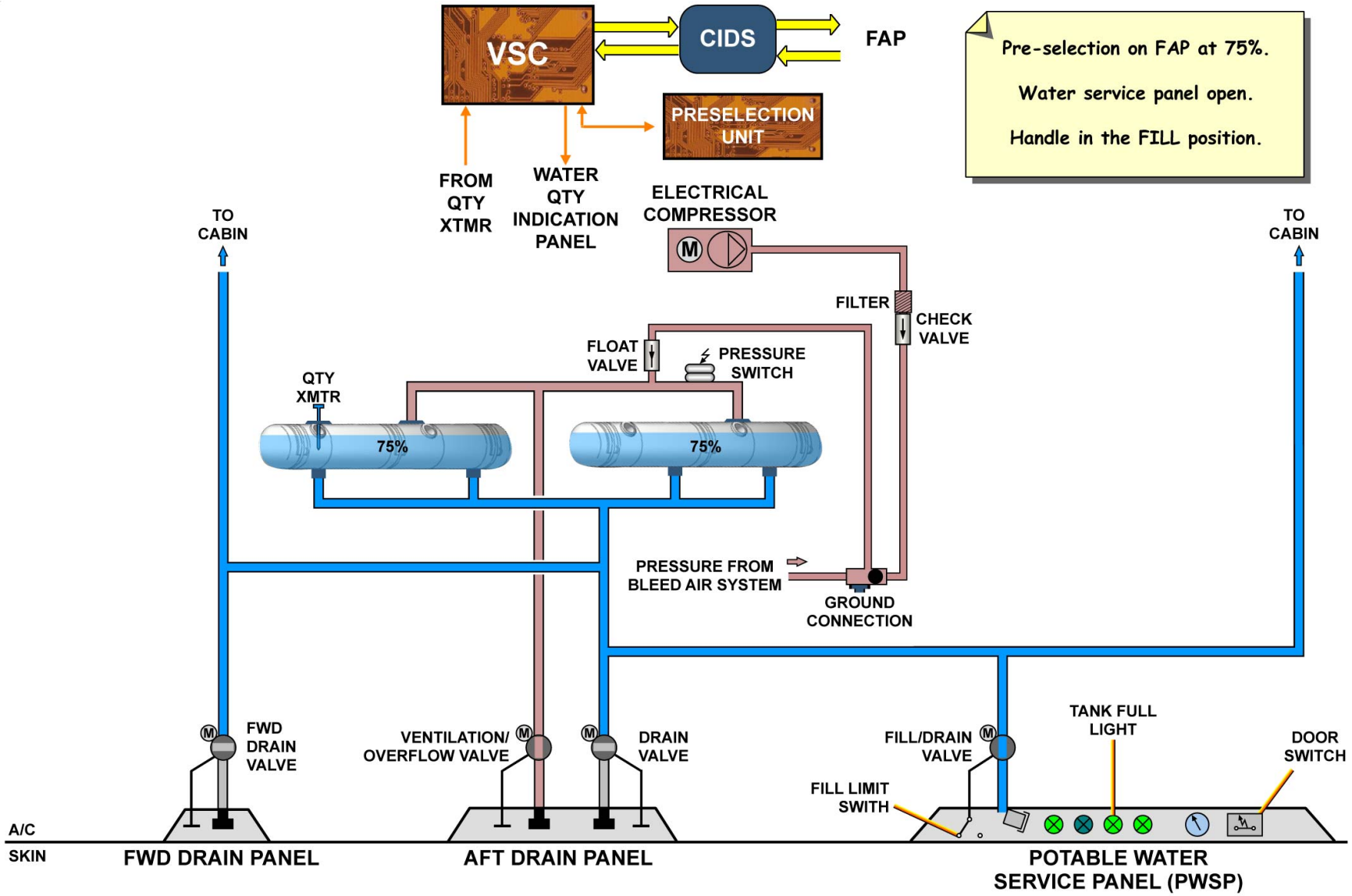

FILLING - WITH ELECTRICAL POWER

G7508471 - G3NT1T0 - FM38D100000003

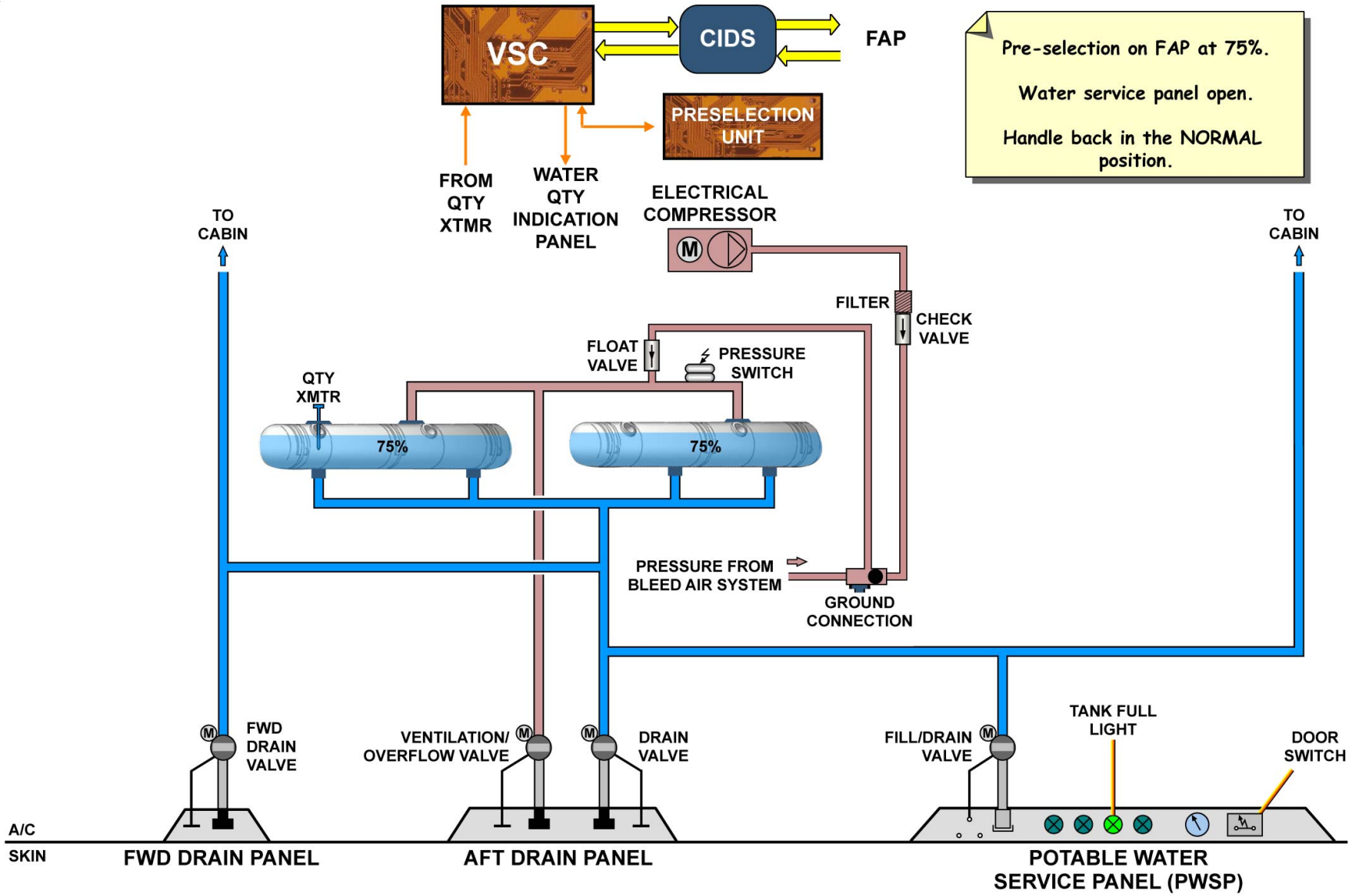

FILLING - WITH ELECTRICAL POWER

G7508471 - G3NT1T0 - FM38D100000003

POTABLE WATER SYSTEM D/O (3)

FILLING (continued)

WITHOUT ELECTRICAL POWER

The fill/drain valve control handle on the PWSP is turned manually to the FILL position, and the ventilation/overflow valve control handle on the AFT drain panel is turned manually to the OPEN position.
Then, the fill/drain valve and the ventilation/overflow valves are open.
On the AFT drain panel, when the water flows out of the ventilation/overflow nipple, this indicates that the tanks are full and the control handles must be manually placed back into the CLOSE and NORMAL position.
No indication is given on the water quantity indication of the potable service panel.

G7508471 - G3NT1T0 - FM38D100000003

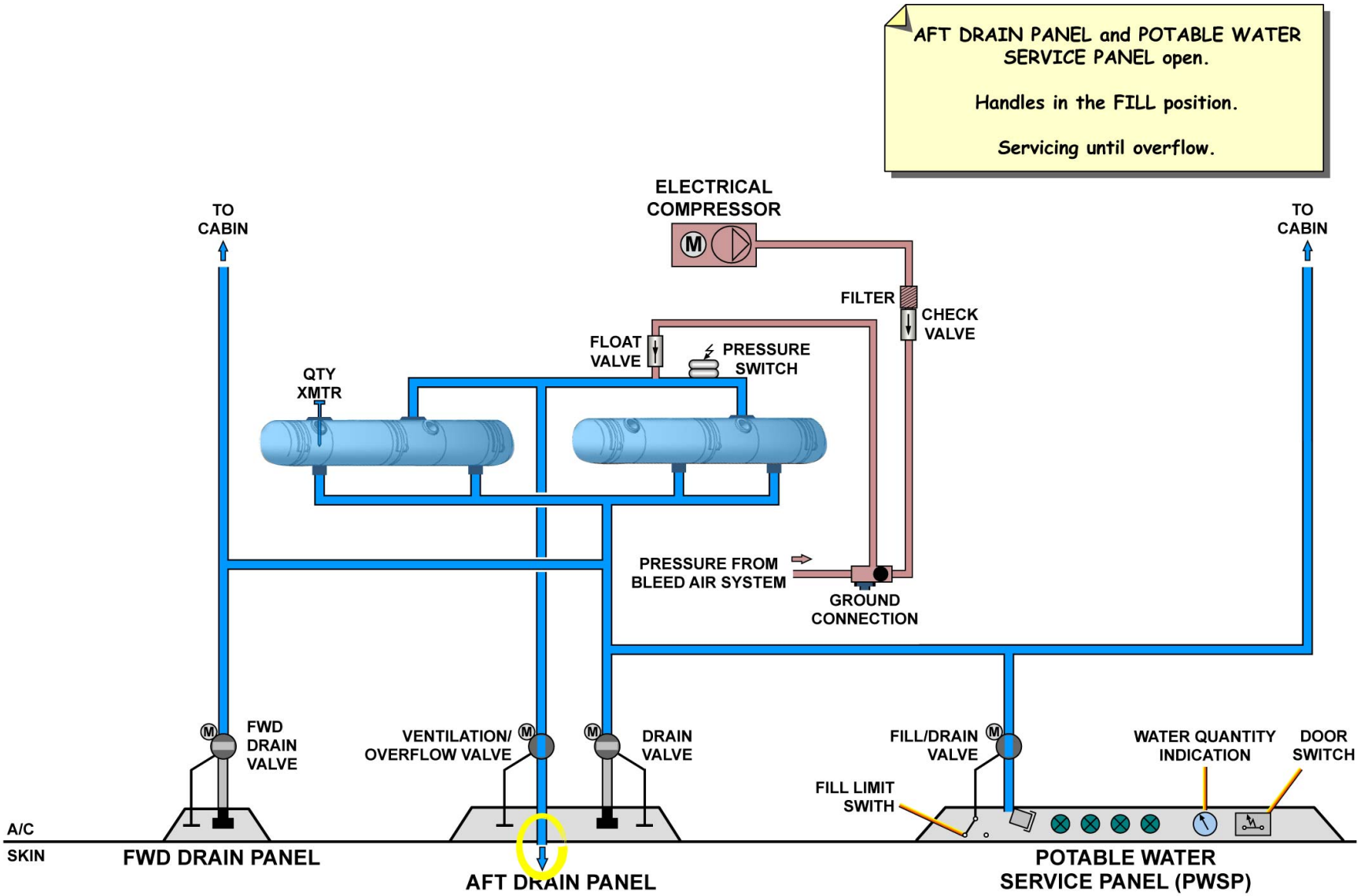

FILLING - WITHOUT ELECTRICAL POWER

G7508471 - G3NT1T0 - FM38D100000003

POTABLE WATER SYSTEM D/O (3)

DRAINING

Draining can be done with or without electrical power.

WITH ELECTRICAL POWER

On the Potable Water Service Panel (PWSP), when the fill/drain valve control handle is turned from the NORMAL to the DRAIN position, the fill/drain valve opens. On the AFT drain panel the ventilation/overflow valve and the drain valve open electrically, as well as the FWD drain valve on the FWD drain panel. Then, "FILL-LINE DRAIN VALVE OPEN", the "FWD DRAIN VALVE OPEN" and the "TANK VENT OPEN" control lights come on.
Water drains from the fill/drain port on the PWSP, from the AFT drain port on the AFT drain panel and from the drain port on the FWD drain panel.
When draining is complete, the fill and drain control handle must be manually placed back in the NORMAL position. The FWD drain valve, the AFT drain valve and the fill/drain valve close. The ventilation/overflow valve also closes automatically. The "FILL-LINE DRAIN VALVE OPEN", the "FWD DRAIN VALVE OPEN" and the "TANK VENT OPEN" control lights go off.

CAUTION: MAKE SURE THAT THE DRAIN VALVES STAY OPEN AFTER YOU DRAIN THE SYSTEM. THIS PREVENTS DAMAGE TO THE SYSTEM IN FREEZING CONDITIONS.

G7508471 - G3NT1T0 - FM38D100000003

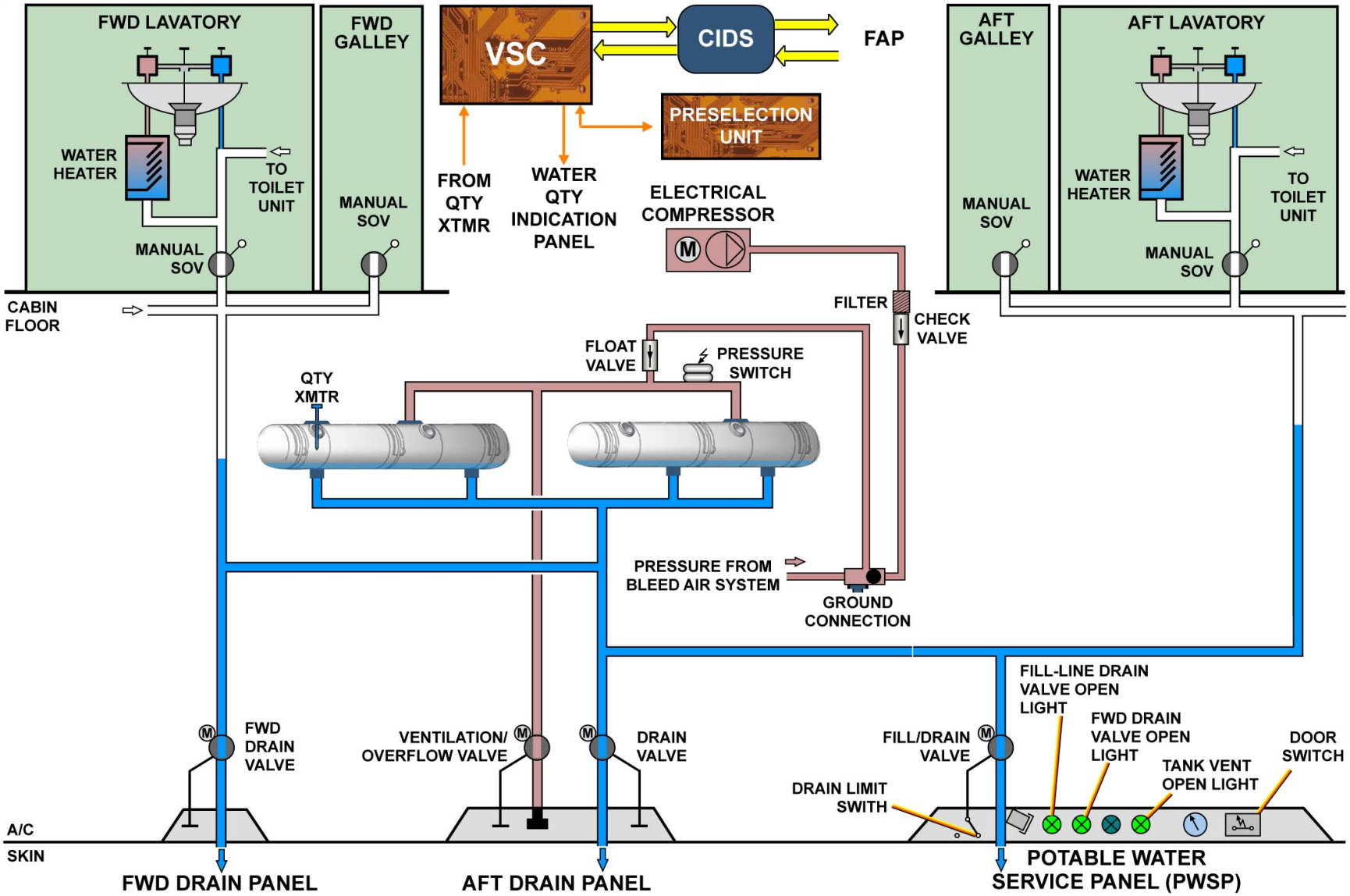

DRAINING - WITH ELECTRICAL POWER

G7508471 - G3NT1T0 - FM38D100000003

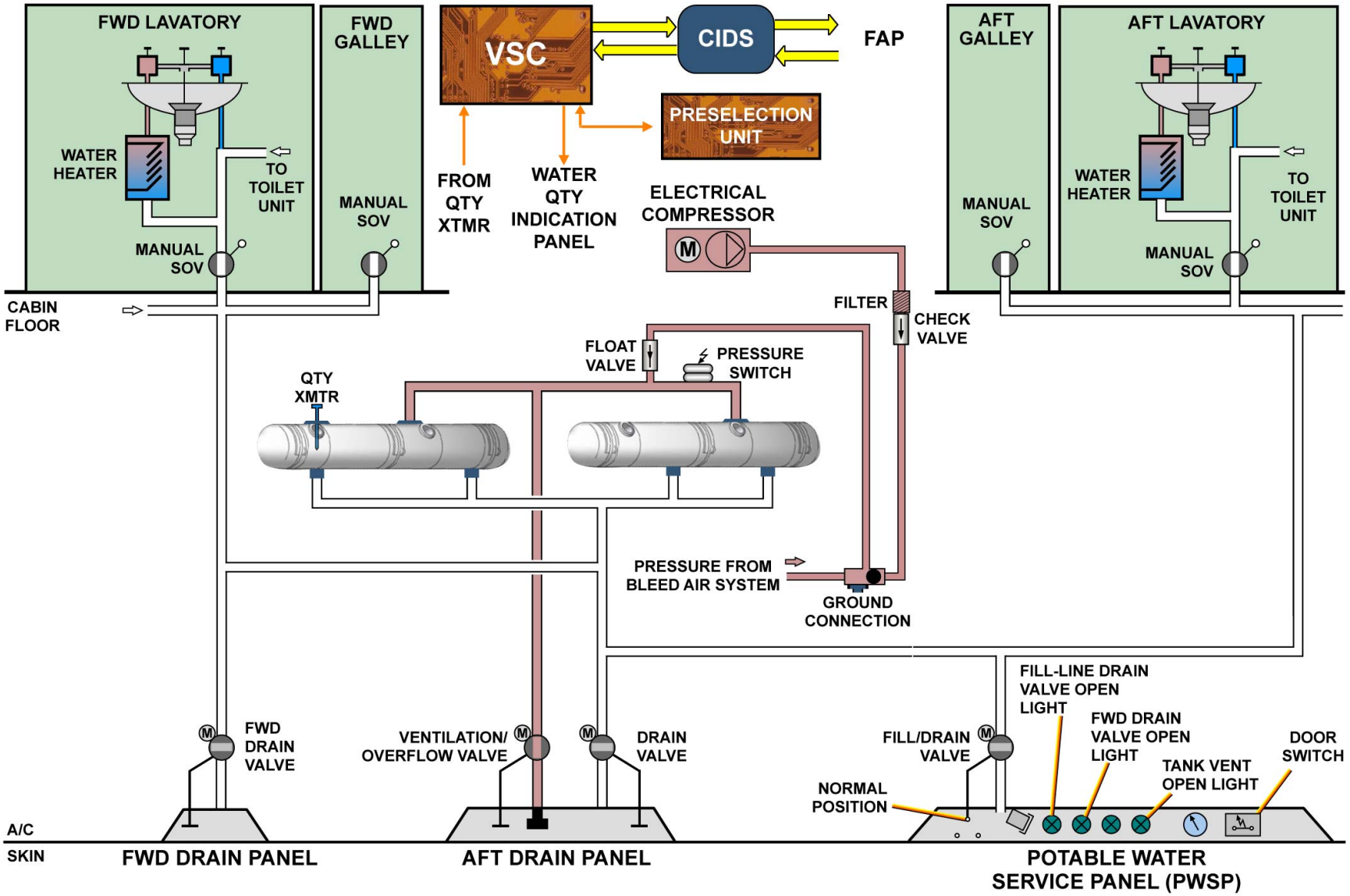

DRAINING - WITH ELECTRICAL POWER

G7508471 - G3NT1T0 - FM38D100000003

This Page Intentionally Left Blank

G7508471 - G3NT1T0 - FM38D1000000003

POTABLE WATER SYSTEM D/O (3)

DRAINING (continued)

WITHOUT ELECTRICAL POWER

The fill/drain valve control handle is manually set from the NORMAL to the DRAIN position. Pull it out to the mechanical stop to open the fill/drain valve. Water drains from the fill/drain port on the PWSP.
Afterwards, on the AFT drain panel, the ventilation/overflow valve and the drain valve are set to the OPEN position using the control handles. Water drains from the fill/drain port on the PWSP and from the drain port of the AFT drain panel.
Finally, the FWD drain valve is opened manually using the control handle on the FWD drain panel. Water drains from the drain port on the FWD drain panel. On the PWSP, no indication is given on the valves position.
When draining is complete, put all drain valves to the CLOSE position and afterwards set the control lever of the fill/drain valve to the NORMAL position.

CAUTION: MAKE SURE THAT THE DRAIN VALVES STAY OPEN AFTER YOU DRAIN THE SYSTEM. THIS PREVENTS DAMAGE TO THE SYSTEM IN FREEZING CONDITIONS.

G7508471 - G3NT1T0 - FM38D1000000003

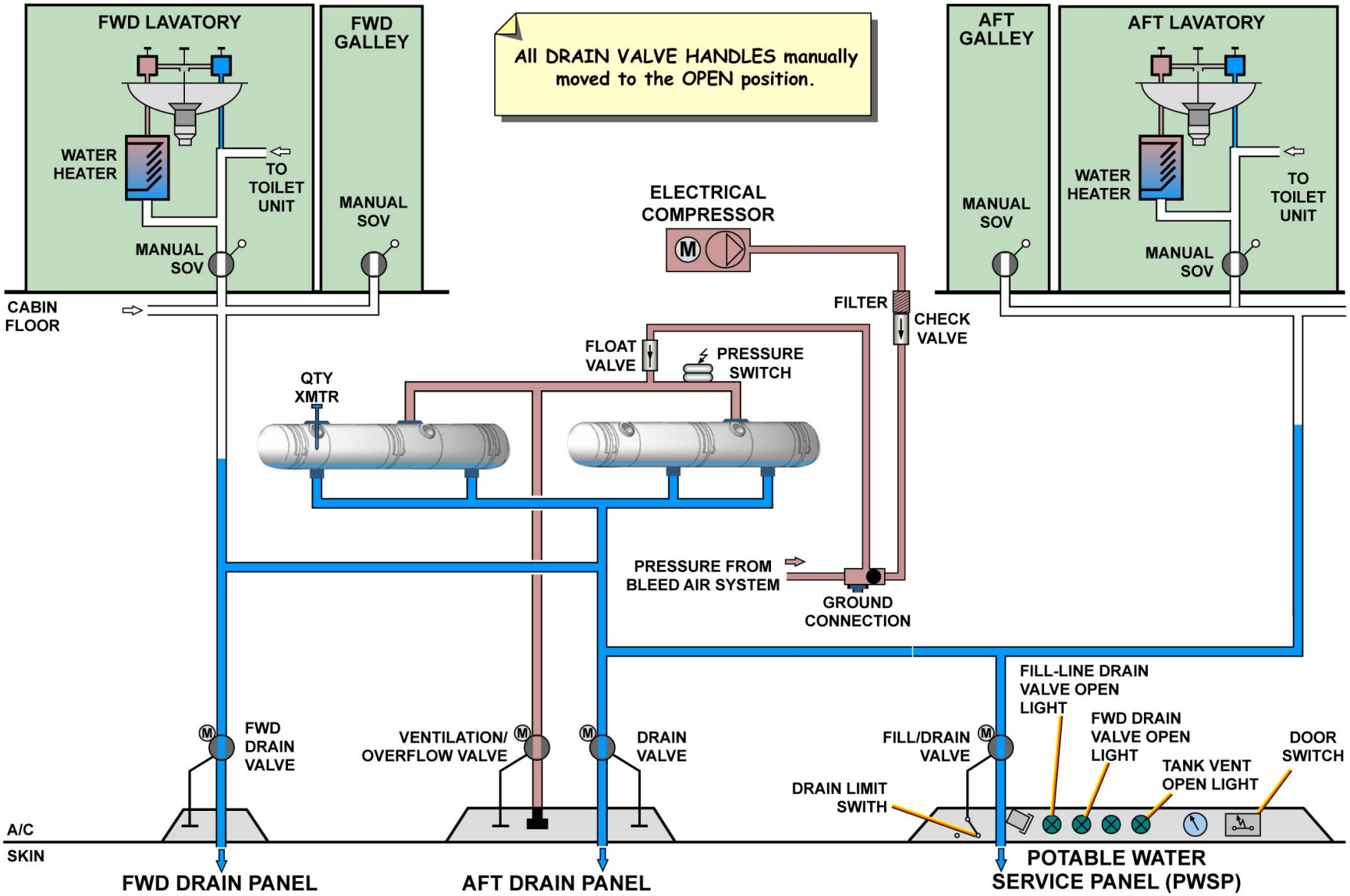

DRAINING - WITHOUT ELECTRICAL POWER

G7508471 - G3NT1T0 - FM38D100000003

POTABLE WATER SYSTEM D/O (OPTION 3 TANKS) (3)

STORAGE

Three potable water tanks are installed in the pressurized zone of the A/C, two behind the aft cargo compartment on the right hand sidewall panels and one in the bulk cargo compartment.
The tanks have a capacity of 350 liters (92.46 US gallons). They have connections for filling, draining and distribution ports and with an overflow and venting port connected to the pressurization system. Any tank can supply water to any galley and lavatory.

G7508471 - G3NT1T0 - FM38D1000000004

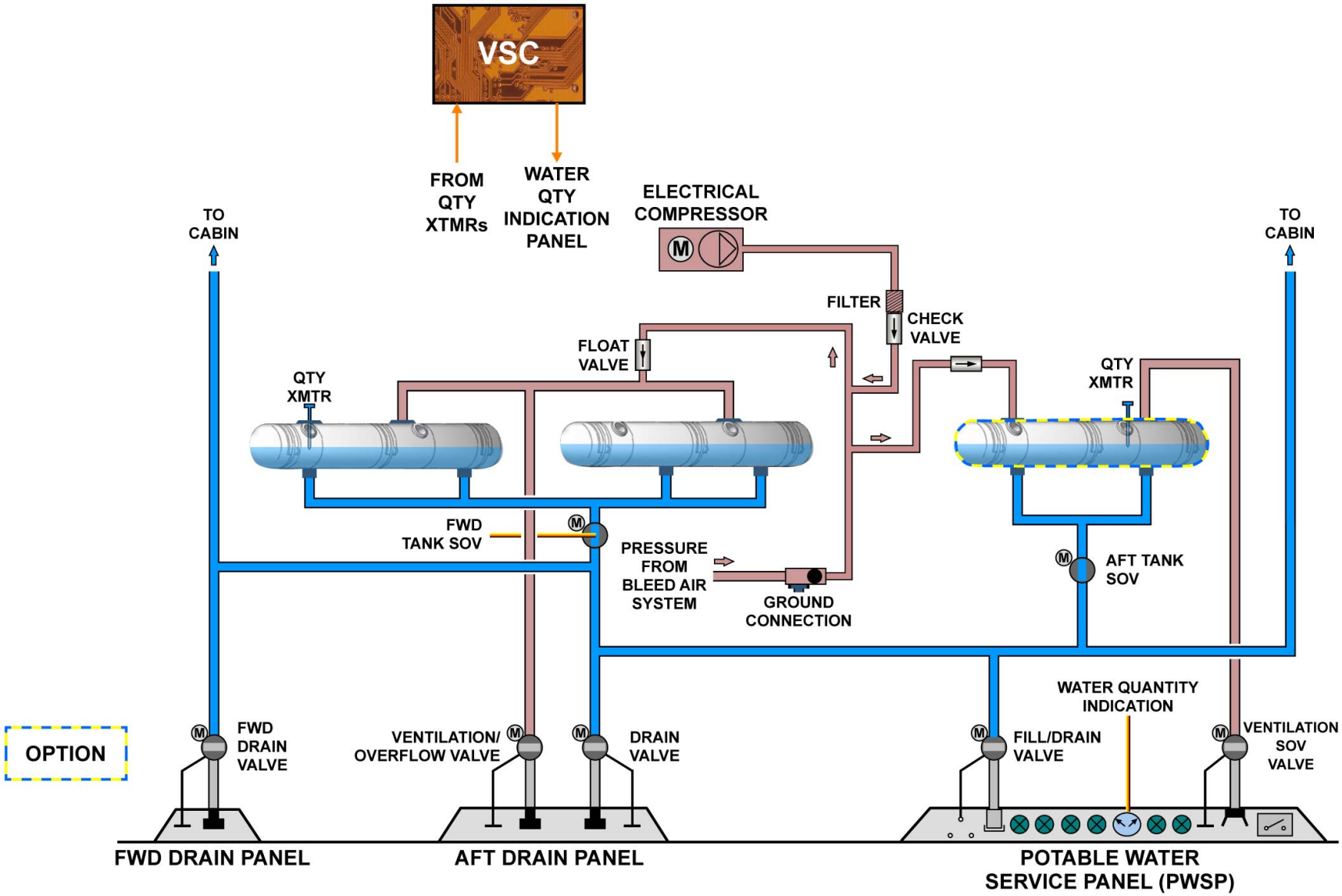

STORAGE

G7508471 - G3NT1T0 - FM38D100000004

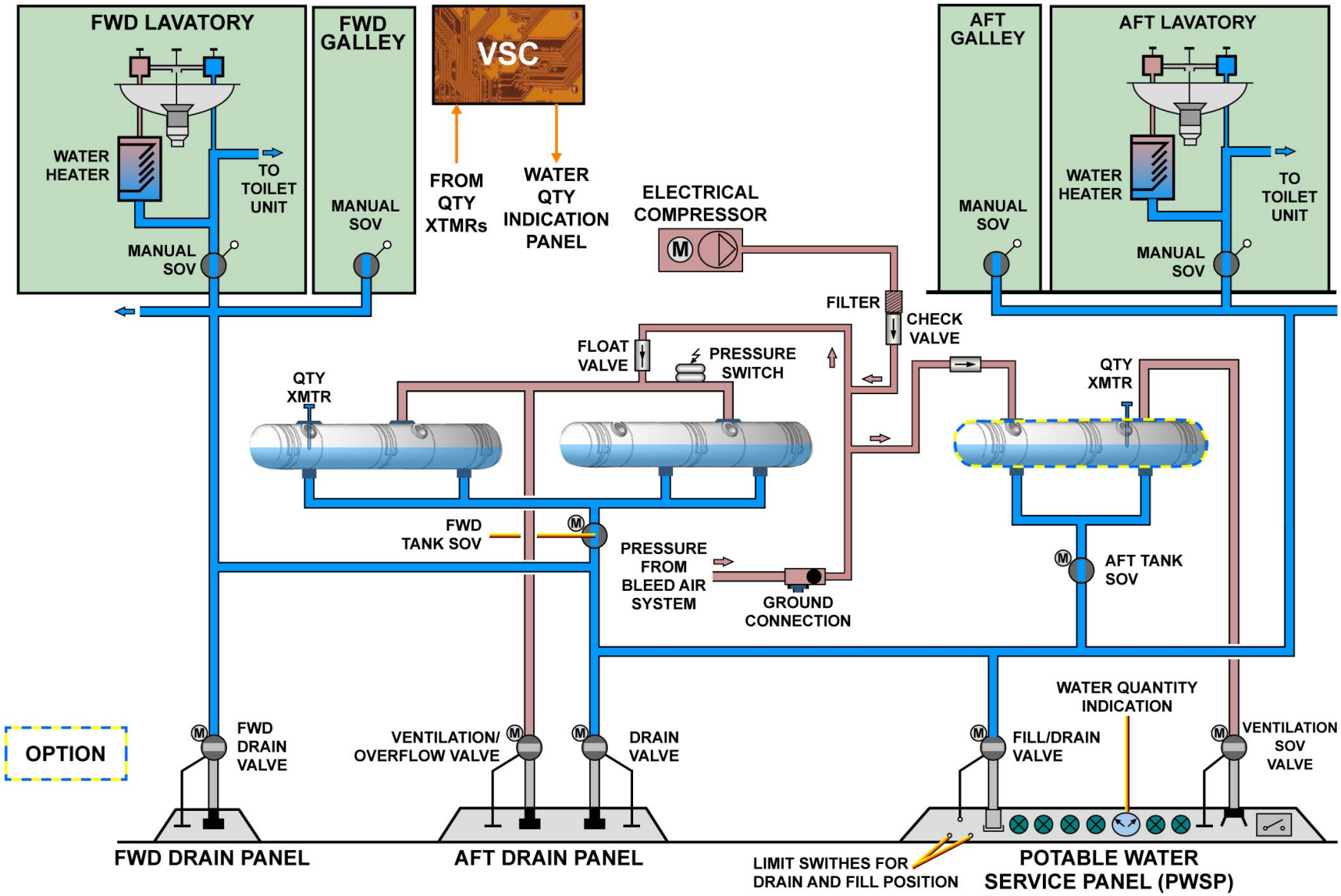

STORAGE

G7508471 - G3NT1T0 - FM38D100000004

This Page Intentionally Left Blank

G7508471 - G3NT1T0 - FM38D100000004

POTABLE WATER SYSTEM D/O (OPTION 3 TANKS) (3)

DISTRIBUTION

The lavatory and galley distribution lines run below the passenger compartment floor. They are shrouded and insulated, or insulated and heated. Manual water Shut-Off Valves (SOVs) can be manually set to close in order to isolate a lavatory or a galley.

G7508471 - G3NT1T0 - FM38D100000004

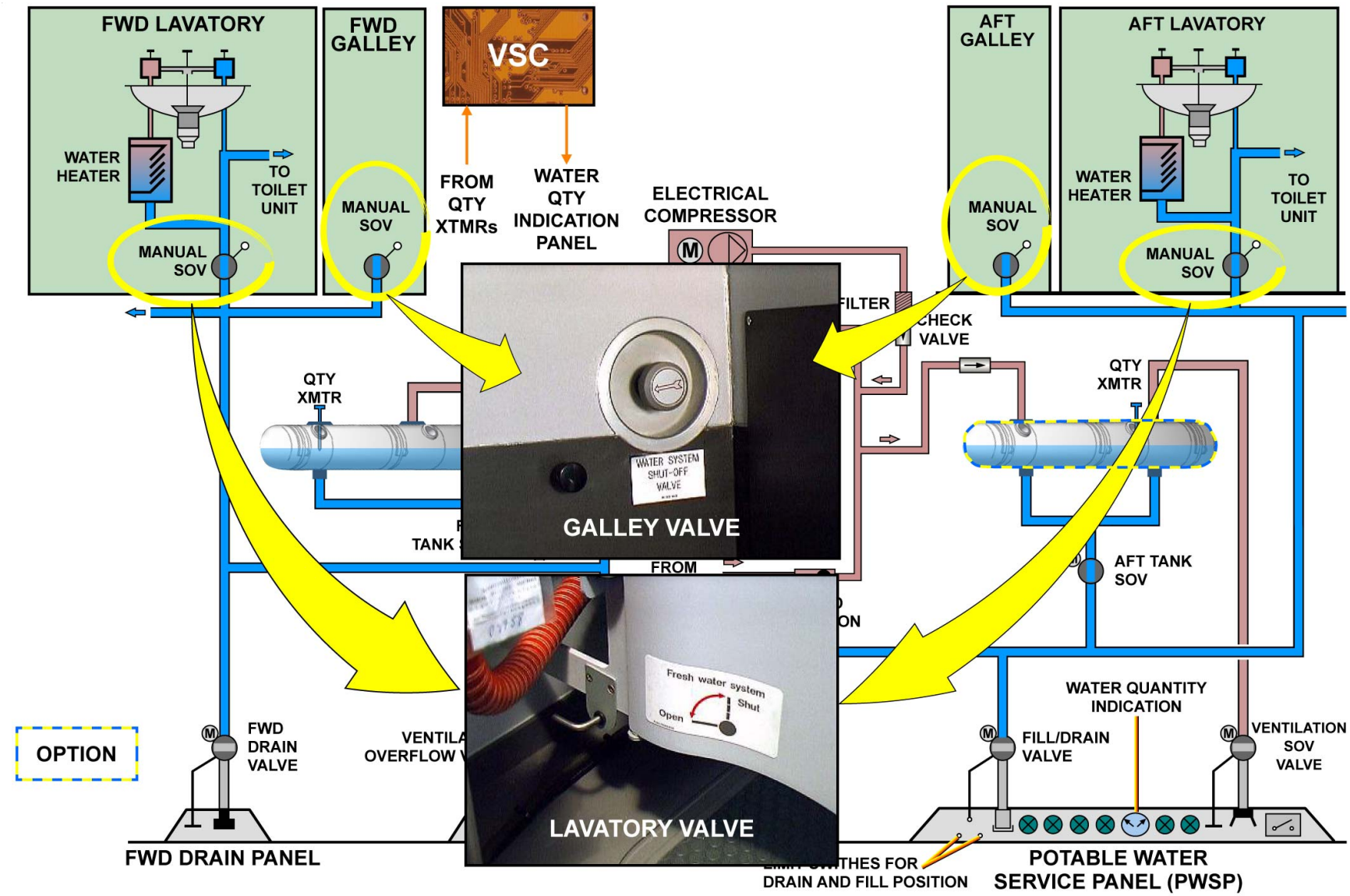

DISTRIBUTION

G7508471 - G3NT1T0 - FM38D100000004

POTABLE WATER SYSTEM D/O (OPTION 3 TANKS) (3)

WATER HEATING

The water heater has a capacity of 1.5 liters (0.4 US gallons). It maintains the water temperature between 49°C (121°F) and 54°C (129°F). Water heating can be switched off by an ON/OFF toggle switch with an over-temperature switch, which operates at 77°C (171°F) and in case of low water quantity. This over-temperature switch can be reset by a P/B beneath the cover. A red indicator light shows water heating. An overpressure relief valve protects the water heater from overpressure.

G7508471 - G3NT1T0 - FM38D100000004

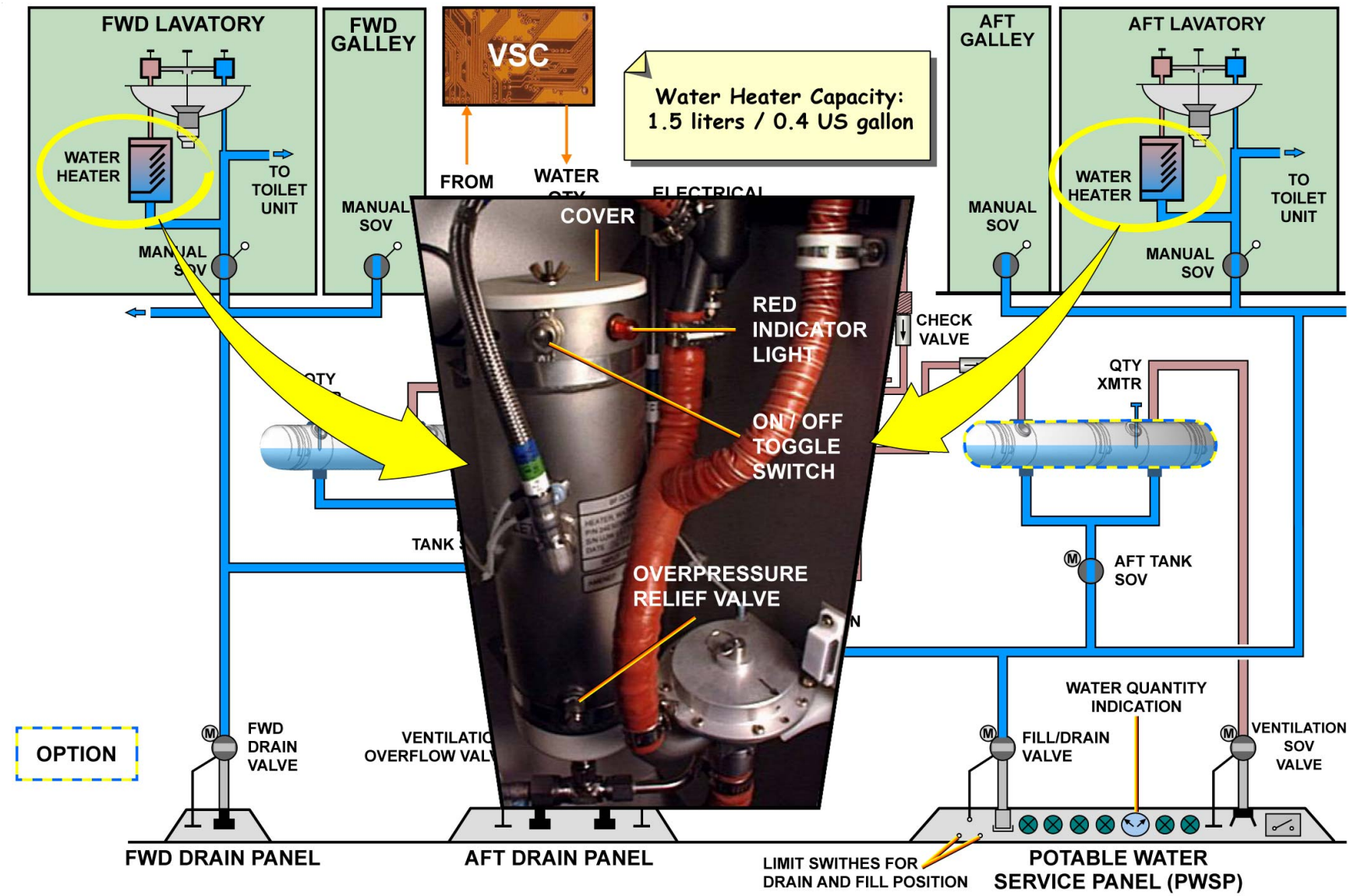

WATER HEATING

G7508471 - G3NT1T0 - FM38D100000004

POTABLE WATER SYSTEM D/O (OPTION 3 TANKS) (3)

INDICATING

Two tanks have an ultrasonic unit quantity transmitter, which sends signals to the Vacuum System Controller (VSC). The VSC transmits the signal directly to the water indication panel on the Potable Water Service Panel (PWSP) and through the Cabin Intercommunication Data System (CIDS) to the Flight Attendant Panel (FAP). The VSC transmits the potable water quantity pre-selection signals from the FAP to the pre-selection units. The indication panel has an indicator. Note that the indication panel is optional.
The display unit on the FAP shows:
- the water quantity,
- the condition of the potable water system,
- the pre-selection value,
- the possible failure messages of the system.

G7508471 - G3NT1T0 - FM38D100000004

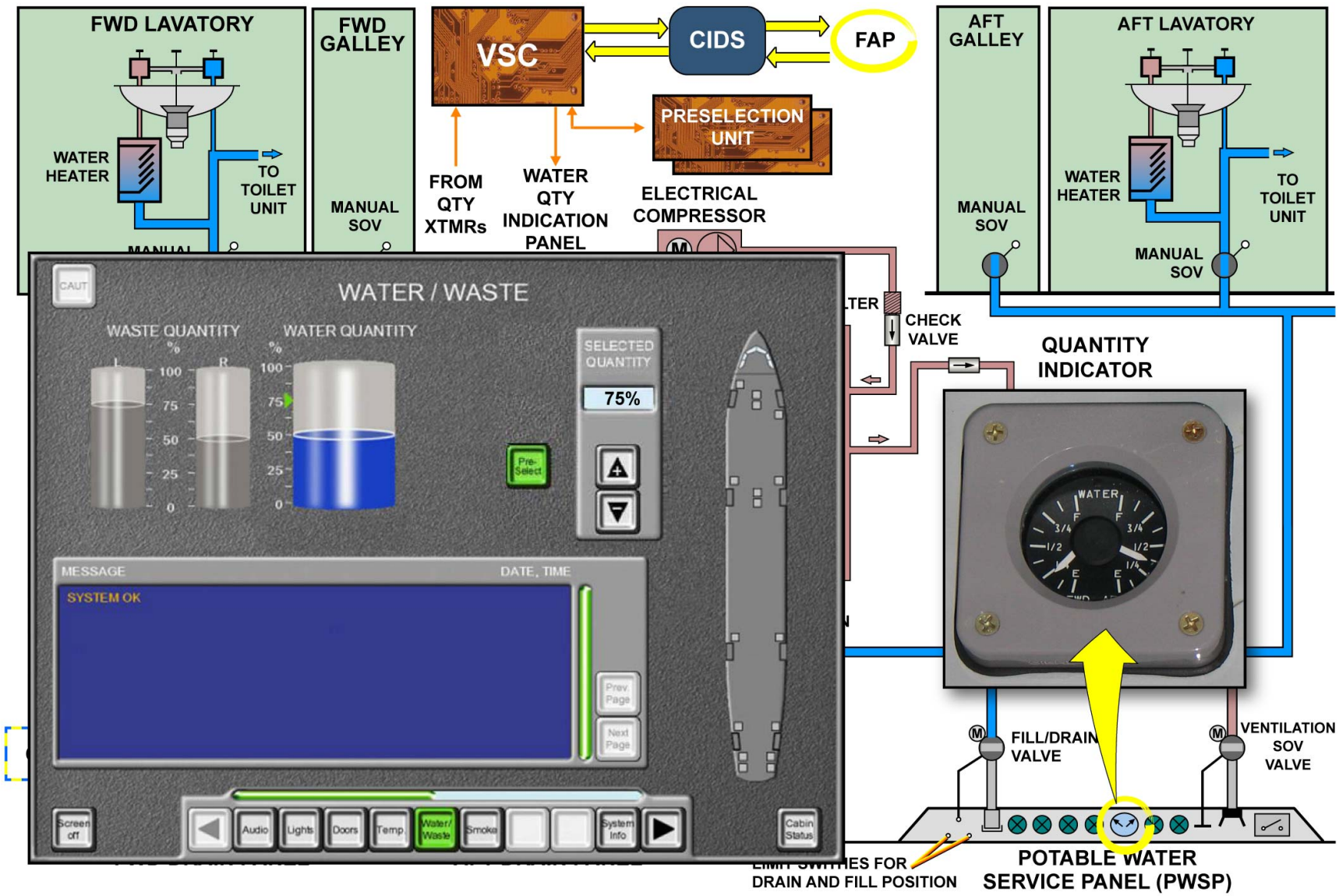

INDICATING

G7508471 - G3NT1T0 - FM38D100000004

POTABLE WATER SYSTEM D/O (OPTION 3 TANKS) (3)

FILLING

Filling can be done with or without electrical power.

WITH ELECTRICAL POWER

On the FAP, the pre-selection level can be set to 25%, 50%, 75% or 100%. On the PWSP, turn the control handle from NORMAL to the FILL position. Then, the fill/drain valve, the ventilation/overflow valve and the ventilation SOV valve open electrically. The "FILL-LINE DRAIN VALVE OPEN" control light and the "FWD VENT VALVE OPEN" control light come on.
During filling, the water quantity is transmitted from the VSC to the CIDS.
When the set value is reached, the "FWD TANK FULL" control light for the two forward tanks, and the "AFT TANK FULL" control light for the aft tank come on.
After the three tanks have reached the set level, the fill/drain valve closes, the control handle goes back to the NORMAL position automatically, and the "FILL-LINE DRAIN VALVE OPEN" control light goes off. The ventilation SOV valve and the ventilation/overflow valve are closed electrically and the "FWD VENT VALVE OPEN" control light also goes off on the PWSP. The potable water filling is completed.

G7508471 - G3NT1T0 - FM38D100000004

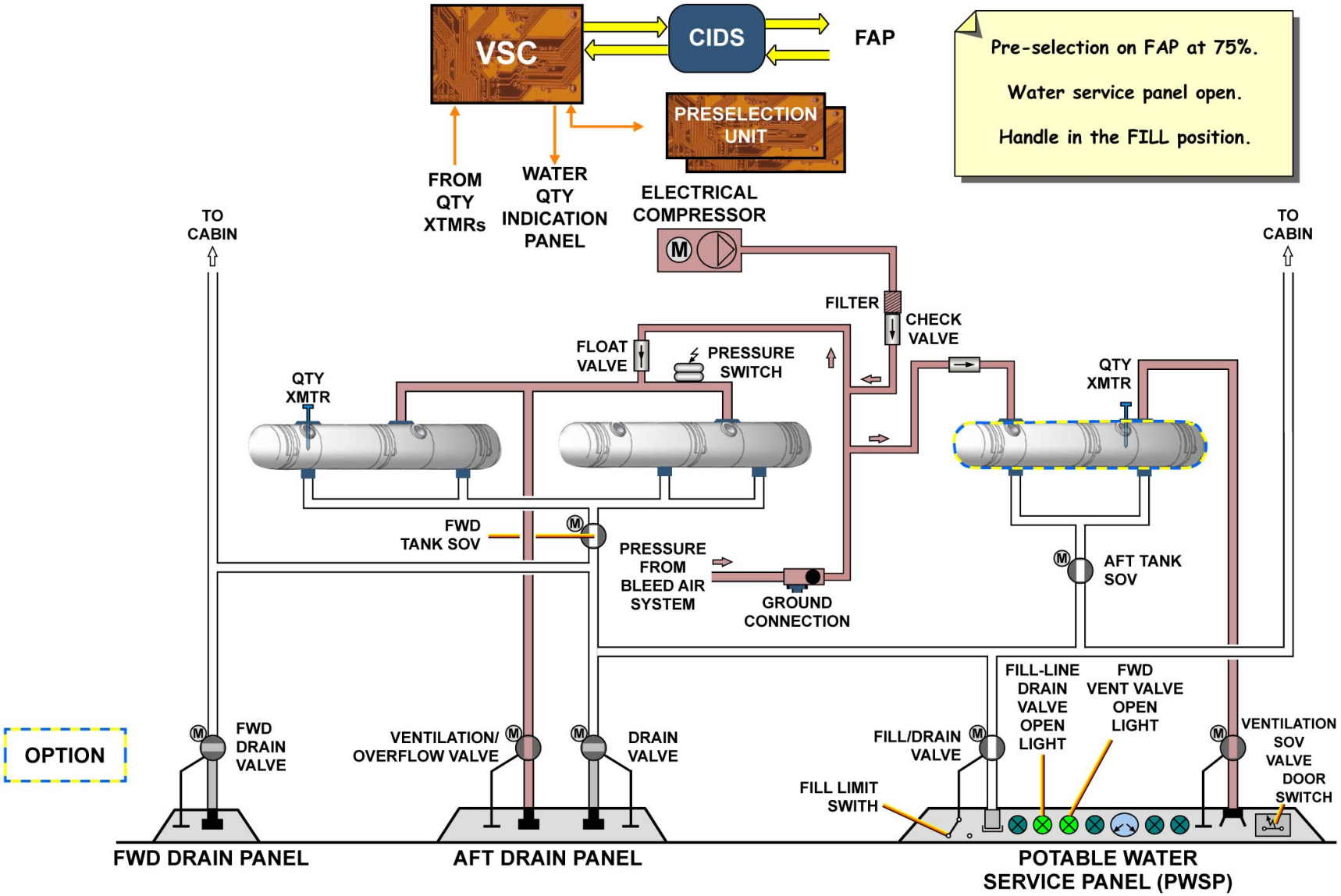

FILLING - WITH ELECTRICAL POWER

G7508471 - G3NT1T0 - FM38D100000004

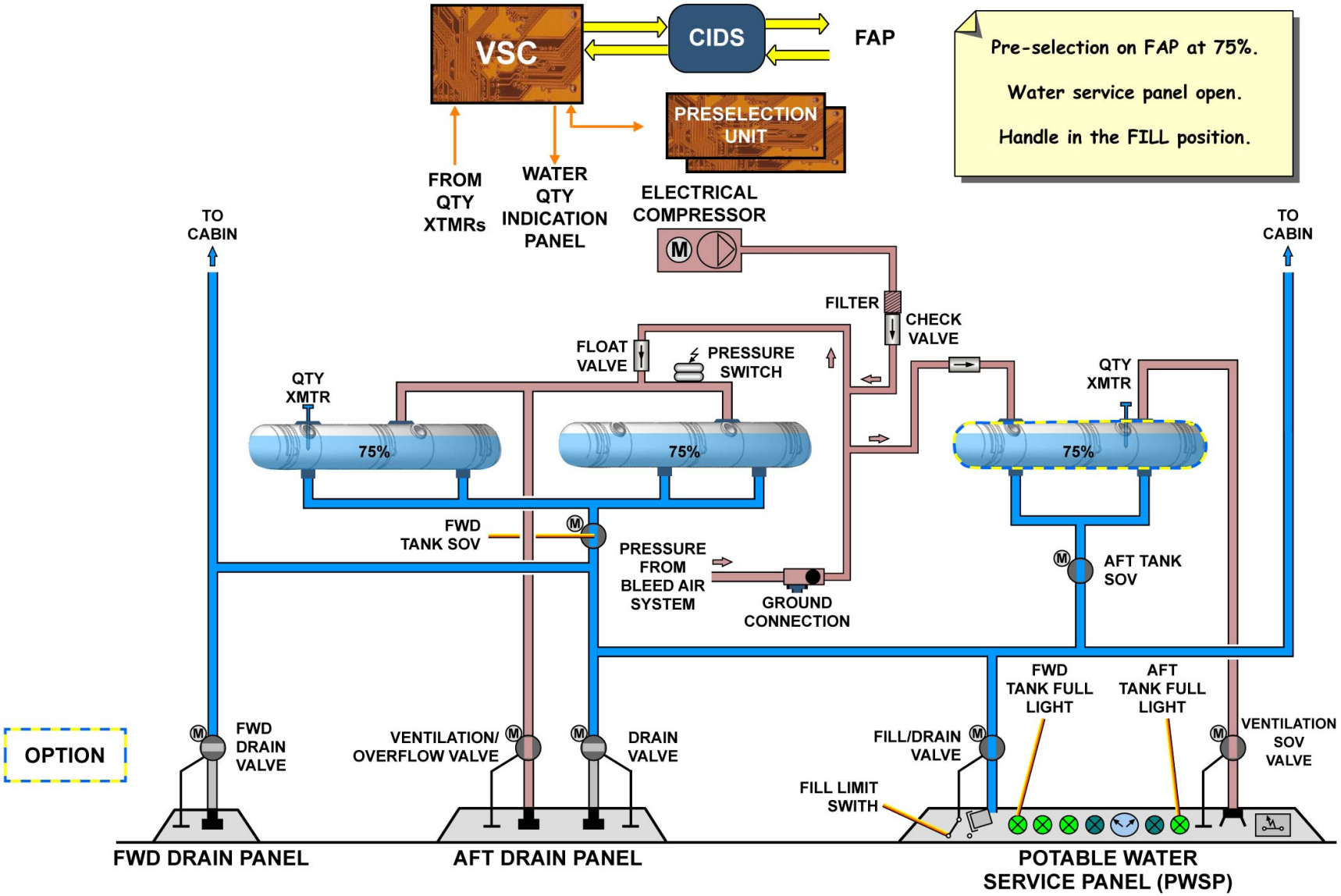

FILLING - WITH ELECTRICAL POWER

G7508471 - G3NT1T0 - FM38D100000004

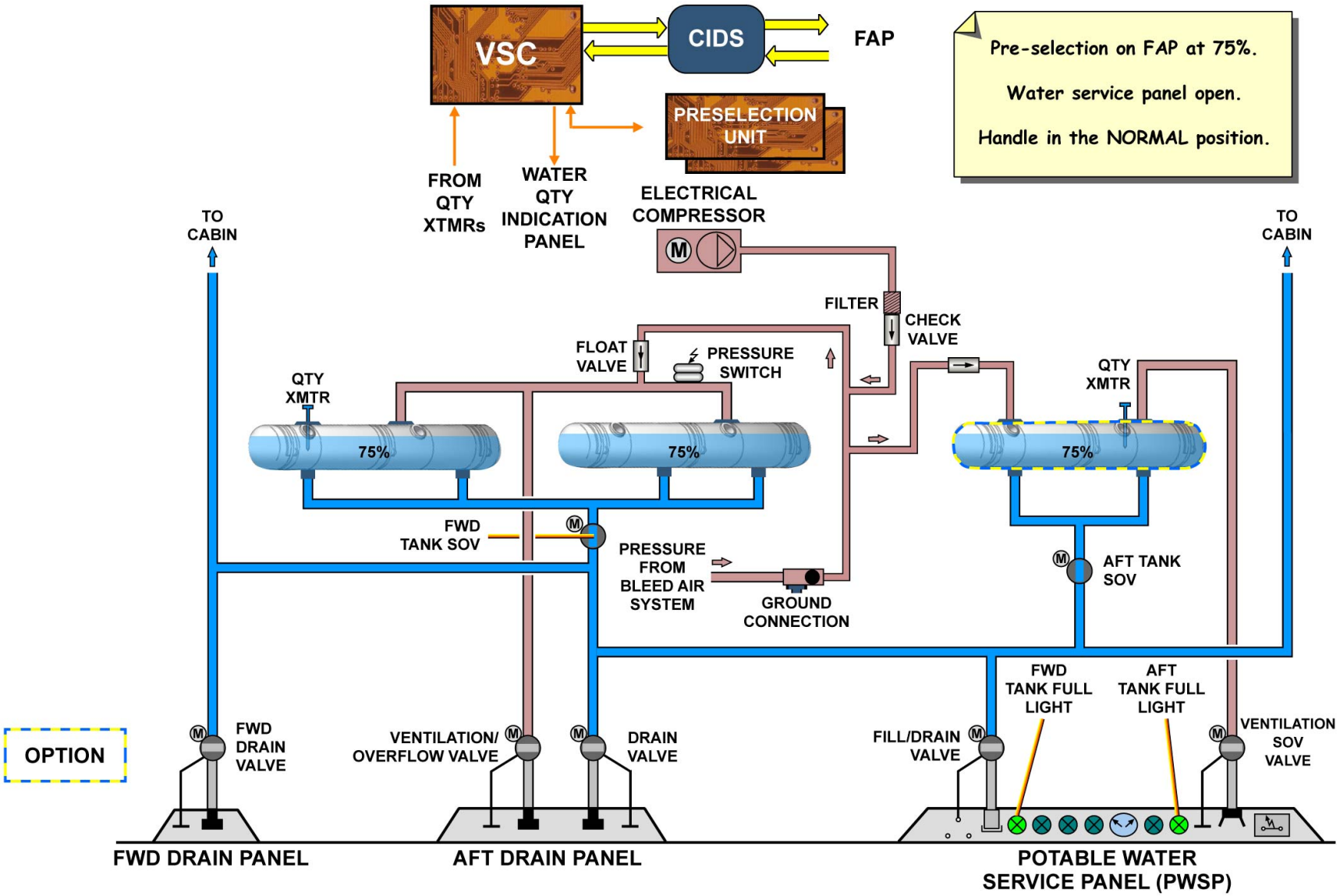

FILLING - WITH ELECTRICAL POWER

G7508471 - G3NT1T0 - FM38D100000004

POTABLE WATER SYSTEM D/O (OPTION 3 TANKS) (3)

FILLING (continued)

WITHOUT ELECTRICAL POWER

On the PWSP, the fill/drain valve control handle is turned manually to the FILL position and the ventilation SOV control handle is turned manually to the OPEN position. On the AFT drain panel, the ventilation/overflow valve control handle is also turned manually to the OPEN position. Then, the fill/drain valve, the ventilation SOV valve and the ventilation/overflow valves are open.
On the AFT drain panel, when the water flows out of the ventilation/overflow nipple, this indicates that the two forward tanks are full. On the PWSP, when the water flows out of the ventilation SOV valve nipple, this indicates that the aft third tank is also full, and the control handles must be manually placed back into the CLOSE and NORMAL position.
No indication is given on the water quantity indication of the potable service panel.

G7508471 - G3NT1T0 - FM38D100000004

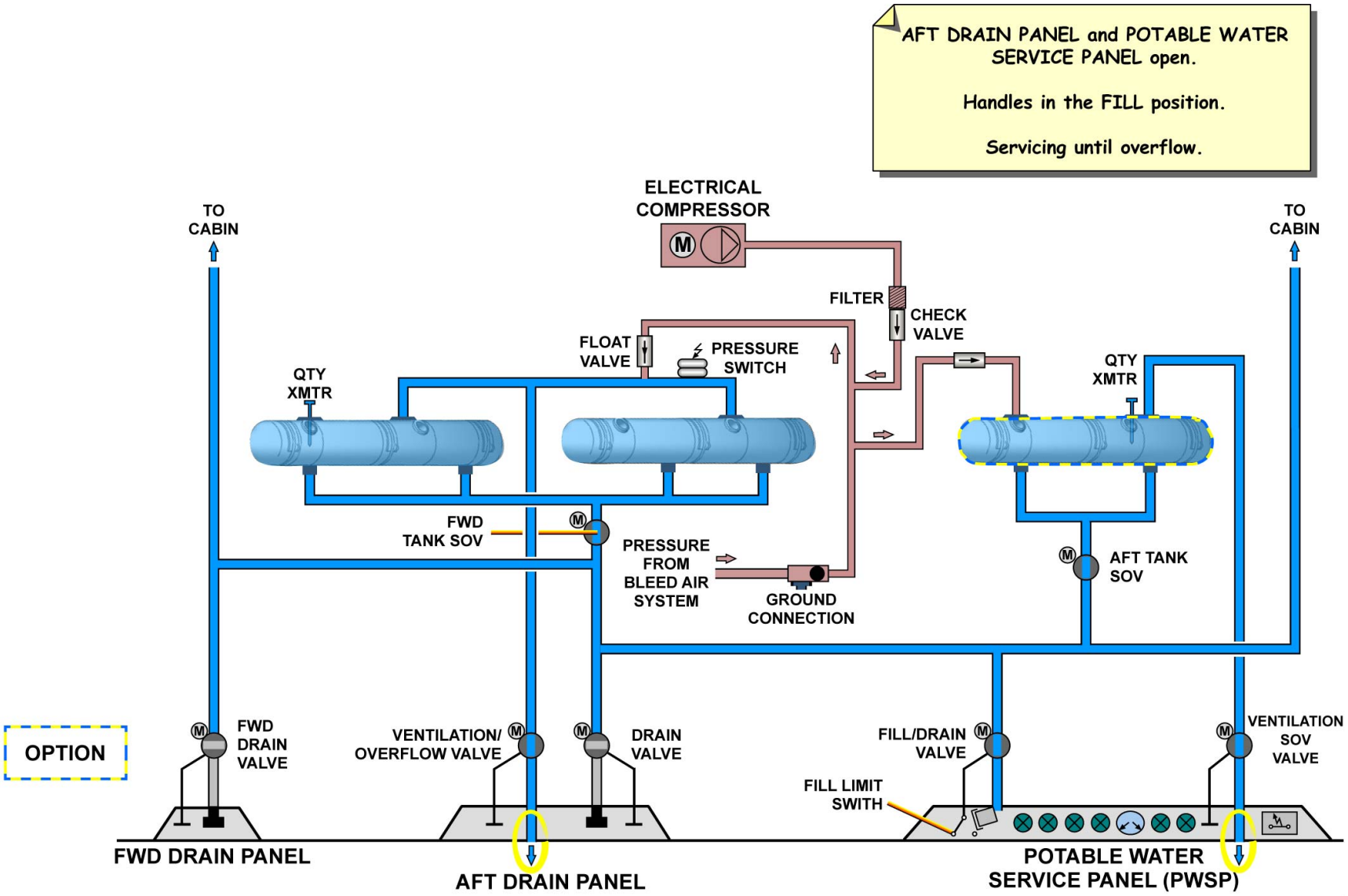

FILLING - WITHOUT ELECTRICAL POWER

G7508471 - G3NT1T0 - FM38D100000004

POTABLE WATER SYSTEM D/O (OPTION 3 TANKS) (3)

DRAINING

Draining can be done with or without electrical power.

WITH ELECTRICAL POWER

On the Potable Water Service Panel (PWSP), when the fill/drain valve control handle is turned from the NORMAL to the DRAIN position, the fill/drain valve and the ventilation SOV valve open. On the AFT drain panel the ventilation/overflow valve and the drain valve open electrically, as well as the FWD drain valve on the FWD drain panel. Then, "FILL-LINE DRAIN VALVE OPEN", the "FWD VENT VALVE OPEN" and the "FWD DRAIN VALVE OPEN" control lights come on.
Water drains from the fill/drain port on the PWSP, from the AFT drain port on the AFT drain panel and from the drain port on the FWD drain panel.
When draining is complete, the fill/drain control handle must be manually placed back in the NORMAL position. The ventilation SOV valve, the FWD drain valve, the AFT drain valve and the fill/drain valve close. The ventilation/overflow valve also closes automatically on the AFT drain panel. The "FILL-LINE DRAIN VALVE OPEN", the "FWD VENT VALVE OPEN" and the "FWD DRAIN VALVE OPEN" control lights go off.

CAUTION: MAKE SURE THAT THE DRAIN VALVES STAY OPEN AFTER YOU DRAIN THE SYSTEM. THIS PREVENTS DAMAGE TO THE SYSTEM IN FREEZING CONDITIONS.

G7508471 - G3NT1T0 - FM38D100000004

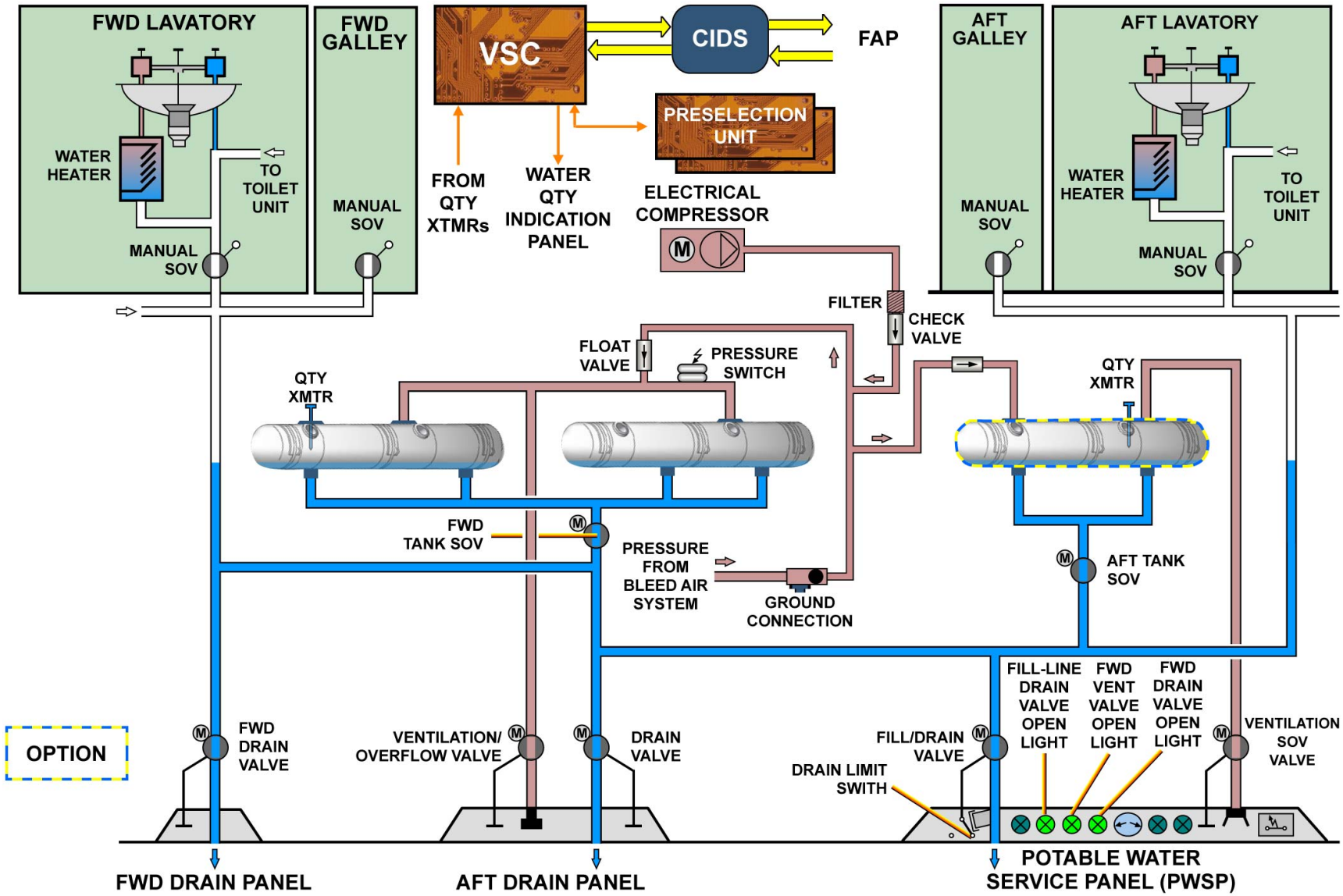

DRAINING - WITH ELECTRICAL POWER

G7508471 - G3NT1T0 - FM38D100000004

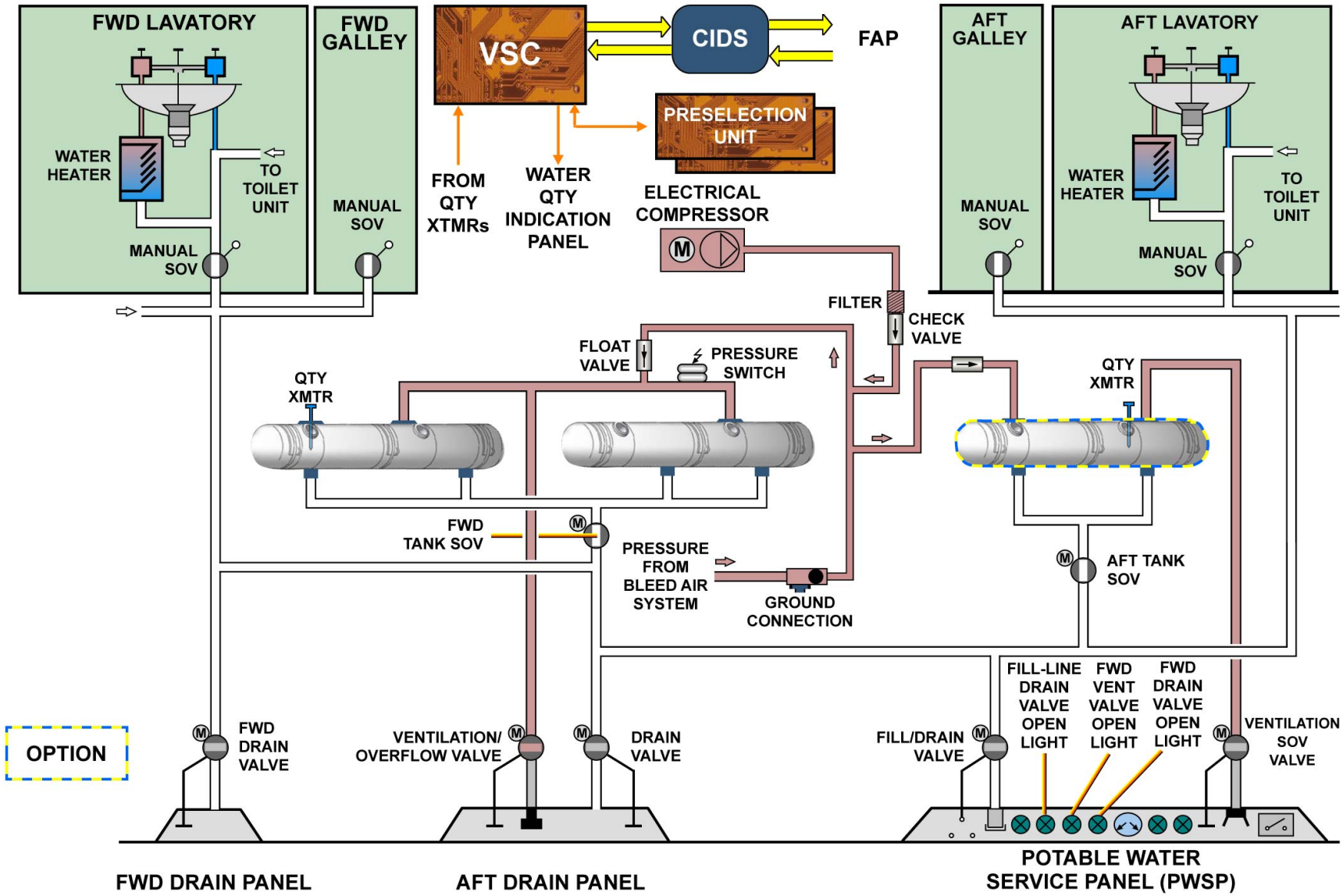

DRAINING - WITH ELECTRICAL POWER

G7508471 - G3NT1T0 - FM38D100000004

This Page Intentionally Left Blank

G7508471 - G3NT1T0 - FM38D100000004

POTABLE WATER SYSTEM D/O (OPTION 3 TANKS) (3)

DRAINING (continued)

WITHOUT ELECTRICAL POWER

The fill/drain valve control handle is manually set from the NORMAL to the DRAIN position. Pull it out to the mechanical stop to open the fill/drain valve. The ventilation SOV is set manually to the OPEN position. Water from the aft third tank drains through the fill/drain port on the PWSP. Afterwards, on the AFT drain panel, the ventilation/overflow valve and the drain valve are set to the OPEN position using the control handles. Water from the two forward tanks drains through the drain port on the AFT drain panel.
Finally, the FWD drain valve is opened manually using the control handle on the FWD drain panel to complete the draining. Water drains from the drain port on the FWD drain panel. On the PWSP, no indication is given on the valves position.
When draining is completed, put all valves to the CLOSE or SHUT position and afterward set the control lever of the fill/drain valve to the NORMAL position.

CAUTION: MAKE SURE THAT THE DRAIN VALVES STAY OPEN AFTER YOU DRAIN THE SYSTEM. THIS PREVENTS DAMAGE TO THE SYSTEM IN FREEZING CONDITIONS.

G7508471 - G3NT1T0 - FM38D100000004

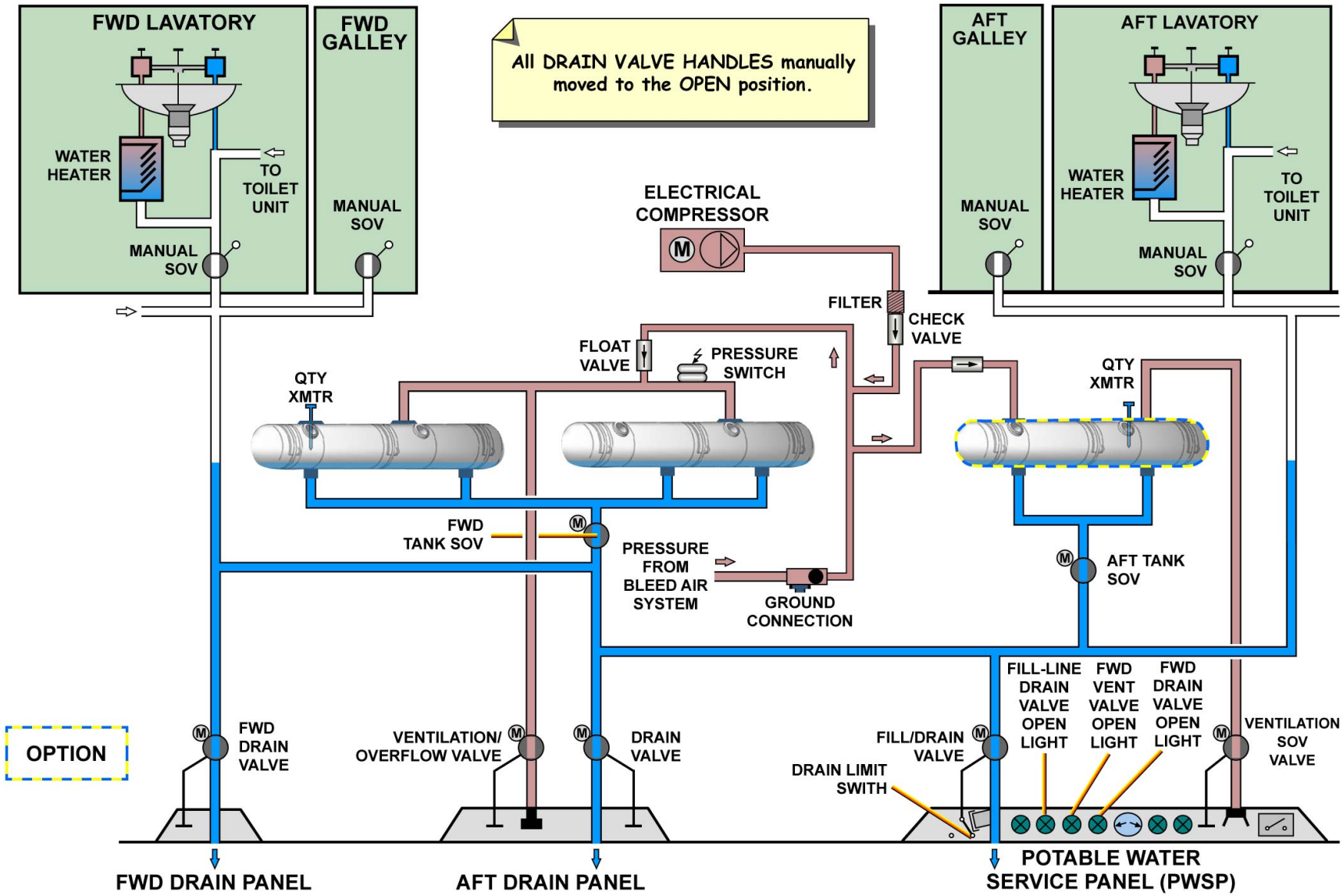

DRAINING - WITHOUT ELECTRICAL POWER

G7508471 - G3NT1T0 - FM38D100000004

AIR SUPPLY SYSTEM D/O (3)

GENERAL

Water tank pressurization is required to deliver water under pressure to the lavatories and galley faucets. The water tanks are pressurized between 25 psi and 30 psi (1.7 bar and 2.1 bar) using different sources:
- the A/C pneumatic system (engines, APU),
- an electrical compressor,
- a ground air supply system.

A float valve prevents water from flowing from the Potable Water System (PWS) to the air supply system.

AIR SUPPLY SYSTEM

The shuttle valve allows the tanks to be pressurized either by the pneumatic system or the ground air supply system. The air filter makes sure that unwanted material and dirt do not get into the system. The relief and pressure-regulating valve maintains the pressure in a range of 25 to 30 psi and prevents overpressure in the water tank by opening when the pressure reaches 34 psi (2.3 bar). The air check-valves let the pressurized air flow only in the direction of the water tanks to prevent:
- a decrease of the pressure in the water tanks,
- an airflow between the tanks,
- a water flow in the direction of the air supply system.

AIR SUPPLY BOOST SYSTEM

The compressor power supply is a 115V AC three-phase current. One air filter is installed on the inlet line and on the outlet line of the compressor. A thermal-overload protection circuit protects the motor from overheating.
Depending on the pressure detected by the pressure switch (between 25 and 28 psi) at the overflow line of the water tanks, the relay energizes the electrical motor of the compressor. The compressor supplies clean compressed air at 28 psi (1.9 bar) to the PWS.

GROUND AIR SUPPLY SYSTEM

On ground, the water tanks can be pressurized. The ground-air pressure connection is installed through a hose with the air pressure manifold in the aft cargo compartment.

G7508471 - G3NT1T0 - FM38D200000003

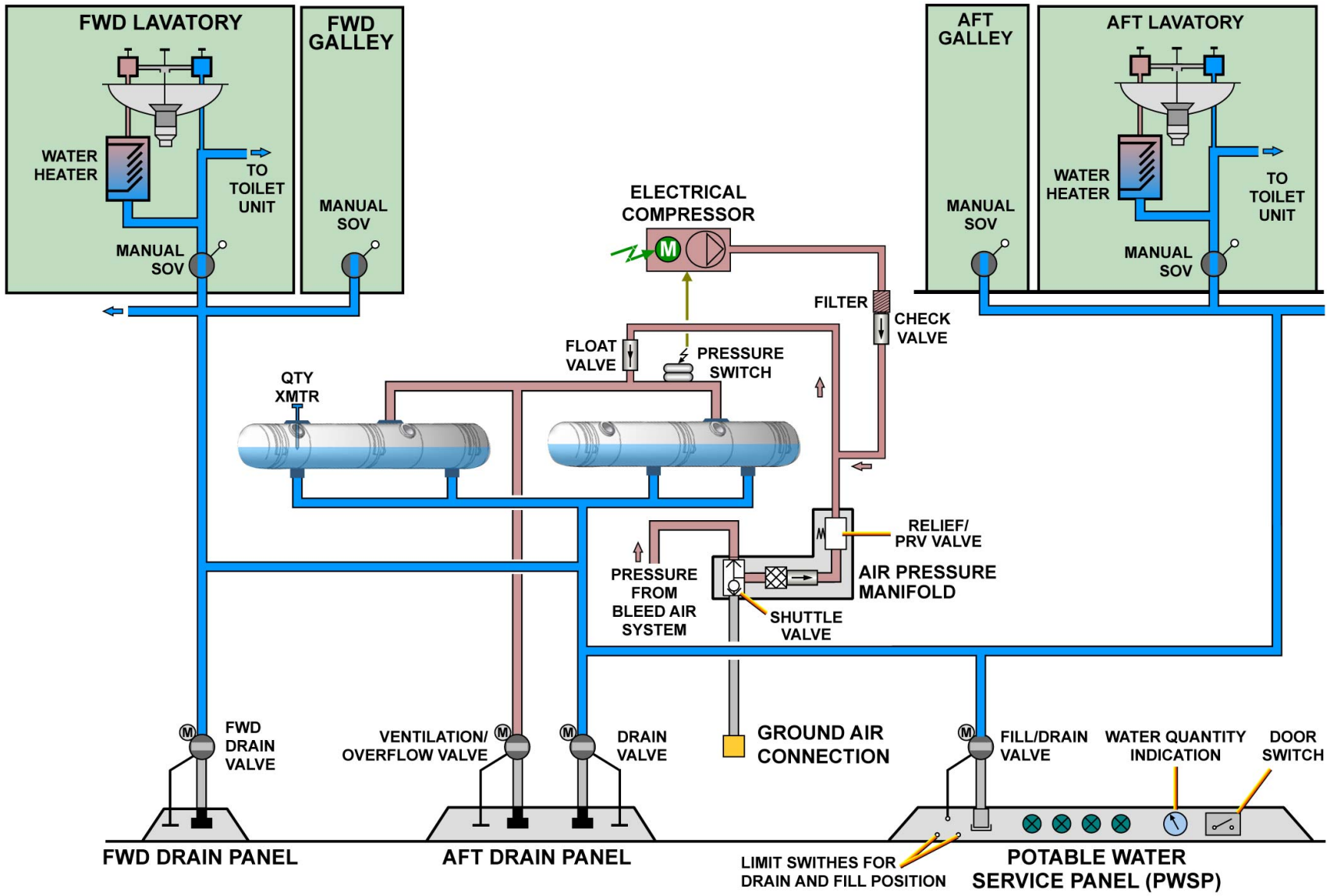

GENERAL ... GROUND AIR SUPPLY SYSTEM

G7508471 - G3NT1T0 - FM38D200000003

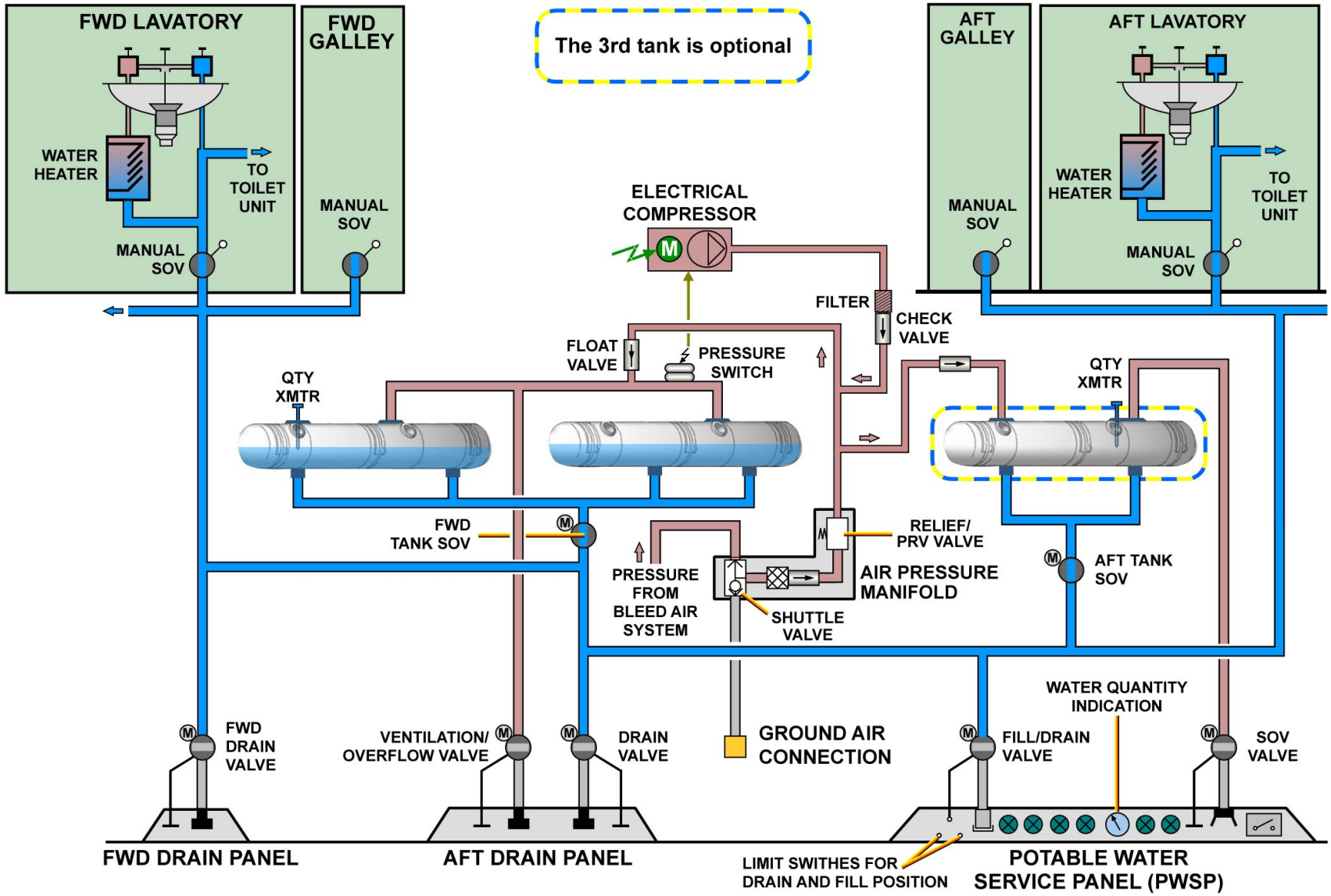

GENERAL ... GROUND AIR SUPPLY SYSTEM

G7508471 - G3NT1T0 - FM38D200000003

This Page Intentionally Left Blank

G7508471 - G3NT1T0 - FM38D200000003

TOILET SYSTEM D/O (3)

GENERAL

The toilet system uses potable water to flush the toilet bowl during the flush cycle. The toilet has two subsystems, one on the left hand and one on the right hand sides. The subsystem has toilet Units, two Waste Holding Tanks, a Vacuum System, a Differential Pressure Sensor, a Waste Level Sensor. A Waste Level Transmitter is installed on the bottom of the Waste Holding Tank. To make sure that the Waste Level Transmitters operate correctly when the pressure in the tank changes, the Waste Level Transmitters are connected to the vacuum line.

G7508471 - G3NT1T0 - FM38D300000003

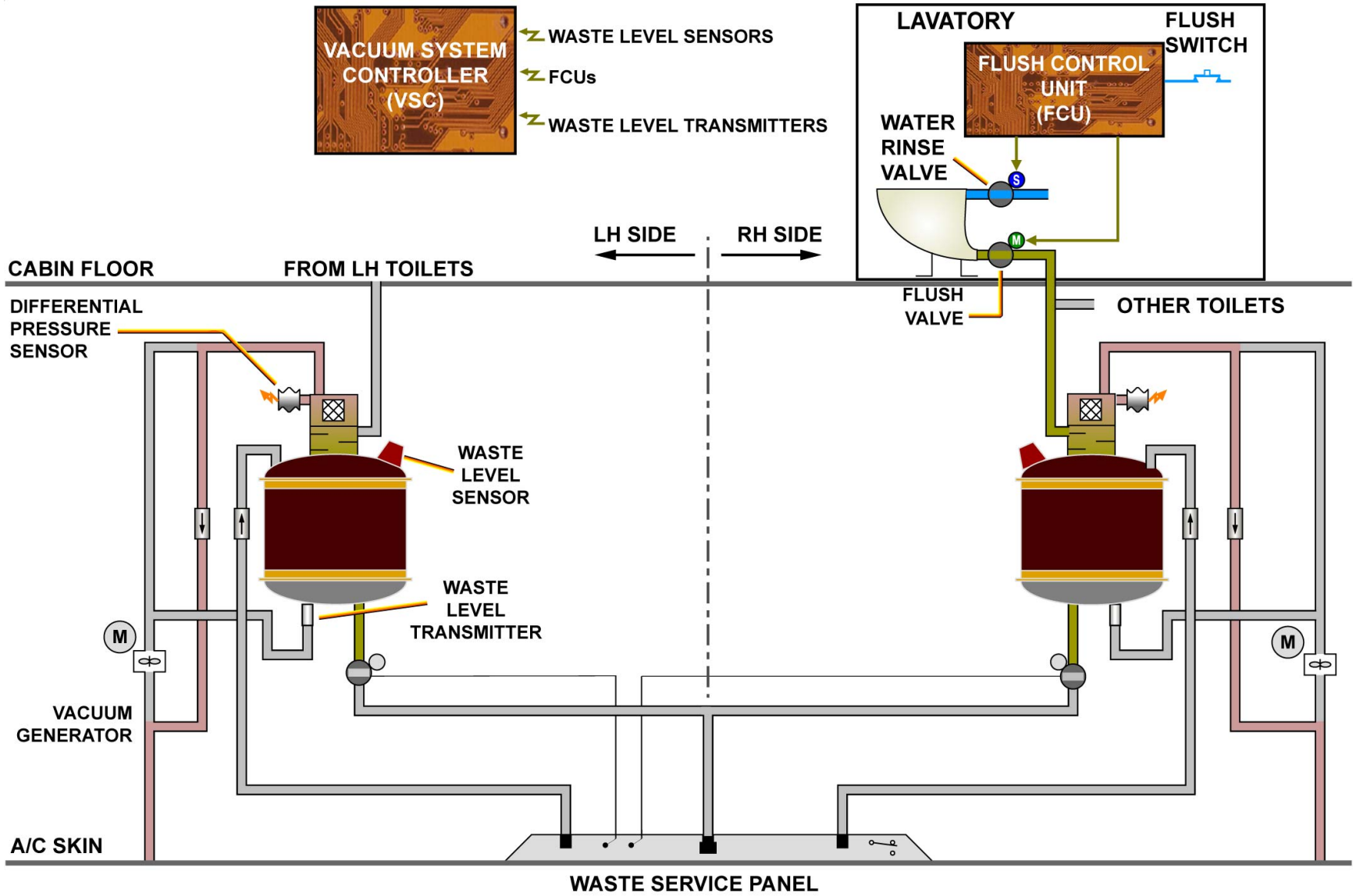

GENERAL

G7508471 - G3NT1T0 - FM38D300000003

TOILET SYSTEM D/O (3)

FLUSHING

When the Flush Switch is pushed in the lavatory, an electrical signal is sent to its Flush Control Unit (FCU), which starts the flush sequence.
The FCU:
- signals the Vacuum System Controller (VSC) to start the Vacuum Generator depending on altitude,
- opens the Water Shutoff/antisyphon Valve to rinse the toilet bowl with potable water,
- opens the Flush Valve.

The Water Shutoff/Antisyphon Valve is a solenoid type valve. It supplies the spray ring. The valve is equipped with an antisyphon device. An electrical motor operates the Flush Valve.
The FCU BITE monitors the operation of the Water Shutoff/Antisyphon Valve, the Flush Valves and its internal control circuitry. If a failure occurs, a signal is transmitted to the VSC.

VACUUM

A differential pressure is necessary to move the waste from the toilet bowl to the tank. The generators give the necessary differential pressure in the applicable Waste Holding Tank when the A/C is on ground, and up to 16000 feet +/ - 700 ft, creating a differential pressure between 4 psi (0.28 bar) and 9 psi (0.62 bar) below the cabin pressure. The Waste Level Transmitter monitors the level in the Waste Holding Tank and sends a signal to the VSC.
The VSC uses the Differential Pressure Sensors, and energizes the motor start relay of the Vacuum Generator when necessary. The VSC monitors the thermal switch circuit on the Vacuum Generator. If a Vacuum Generator becomes too hot, the thermal switch opens and the VSC de-energizes the Vacuum Generator.

G7508471 - G3NT1T0 - FM38D300000003

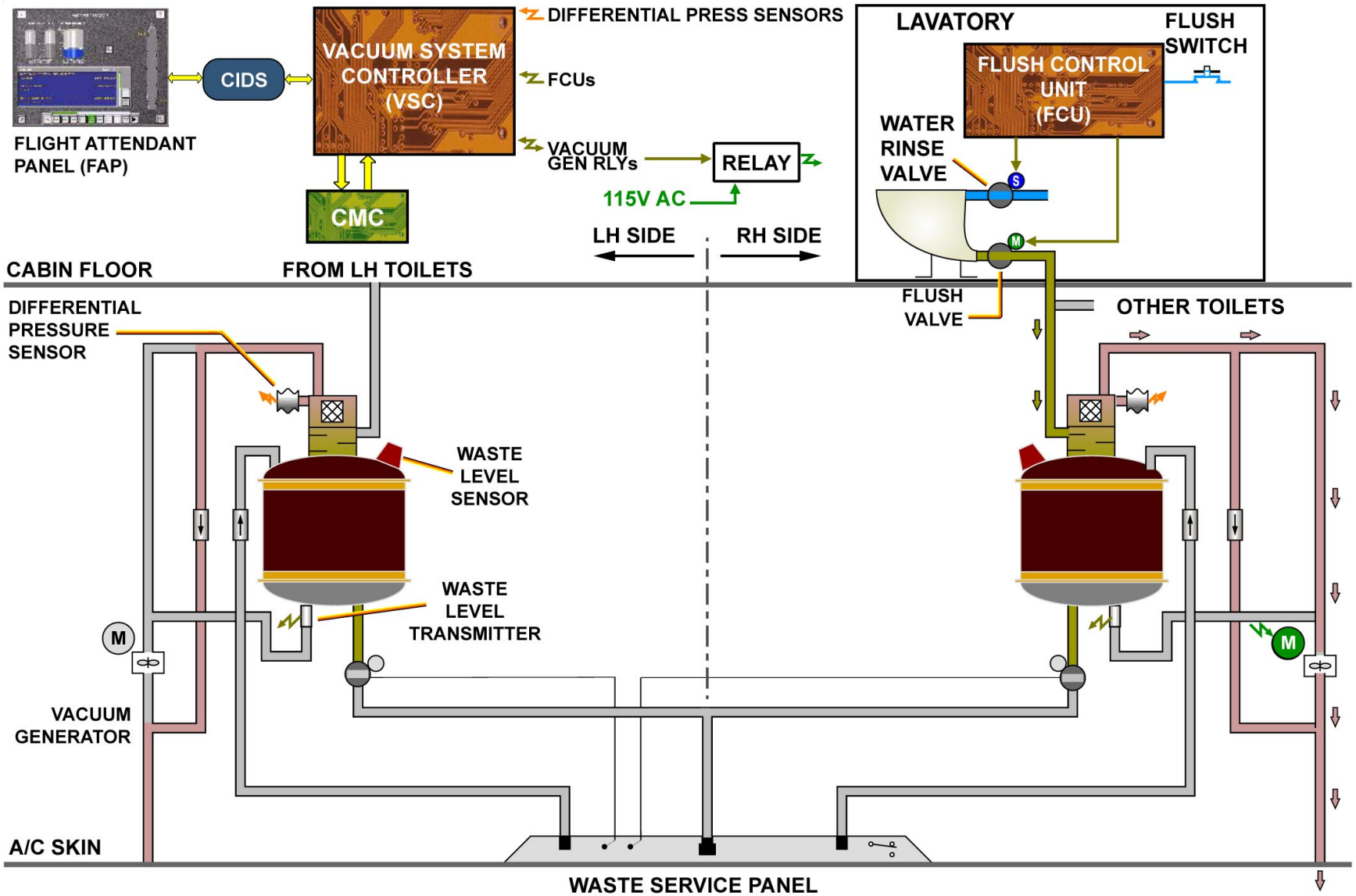

FLUSHING & VACUUM

G7508471 - G3NT1T0 - FM38D300000003

TOILET SYSTEM D/O (3)

WASTE HOLDING

The Waste Tanks are located in the pressurized area of the A/C, aft of the bulk cargo compartment. Each tank has a capacity of 350 liters (92.5 US gal).
The tank receives waste from the toilet through a centrifugal waste separator/demister assembly, which lets the waste be separated from the air. The air goes through a demister filter to the overboard discharge lines and a differential pressure line.
The Waste Level Sensors show "LAVS INOP" and "WASTE TANK FULL" messages on the Flight Attendant Panel (FAP) when necessary. The Waste Level Sensor operates independently of the Differential Pressure Sensors.

VACUUM SYSTEM CONTROLLER

The VSC:
- controls and monitors the operational status of the system and its components,
- sends a signal to the Central Maintenance Computer (CMC) if the system does not operate correctly,
- gives the Waste Holding Tank level, the system status information and displays it on the FAP,
- stops the left and/or right system in flight, if necessary, and when you do the ground servicing.

The VSC interfaces with the Cabin Intercommunication Data System (CIDS) for the display of the Potable Water Tank level on the FAP and for the pre-selected potable water quantity set on the FAP.
The VSC has BITE to monitor the system. The BITE operates in two modes:
- the power-up test,
- the continuous monitoring test.

In these tests the VSC checks:
- the VSC internal operation,
- the status/operation of the components,
- the hardware and the software in the system,
- the toilet and tank configuration in the non-volatile memory of the VSC and compares it with the A/C toilet and tank configuration,
- the status of the position sensors in the Waste Drain Valve.

The VSC sends a message to the CMC if failures are found.

RESET PUSHBUTTON SWITCH

The Reset P/BSW is installed on the circuit breaker panel 5005VE. It is used to reset the VSC after a fault has occurred. When you push the reset pushbutton switch, the VSC does a power-up test. The reset of the VSC and indications on the FAP take approximately 6 seconds.

G7508471 - G3NT1T0 - FM38D300000003

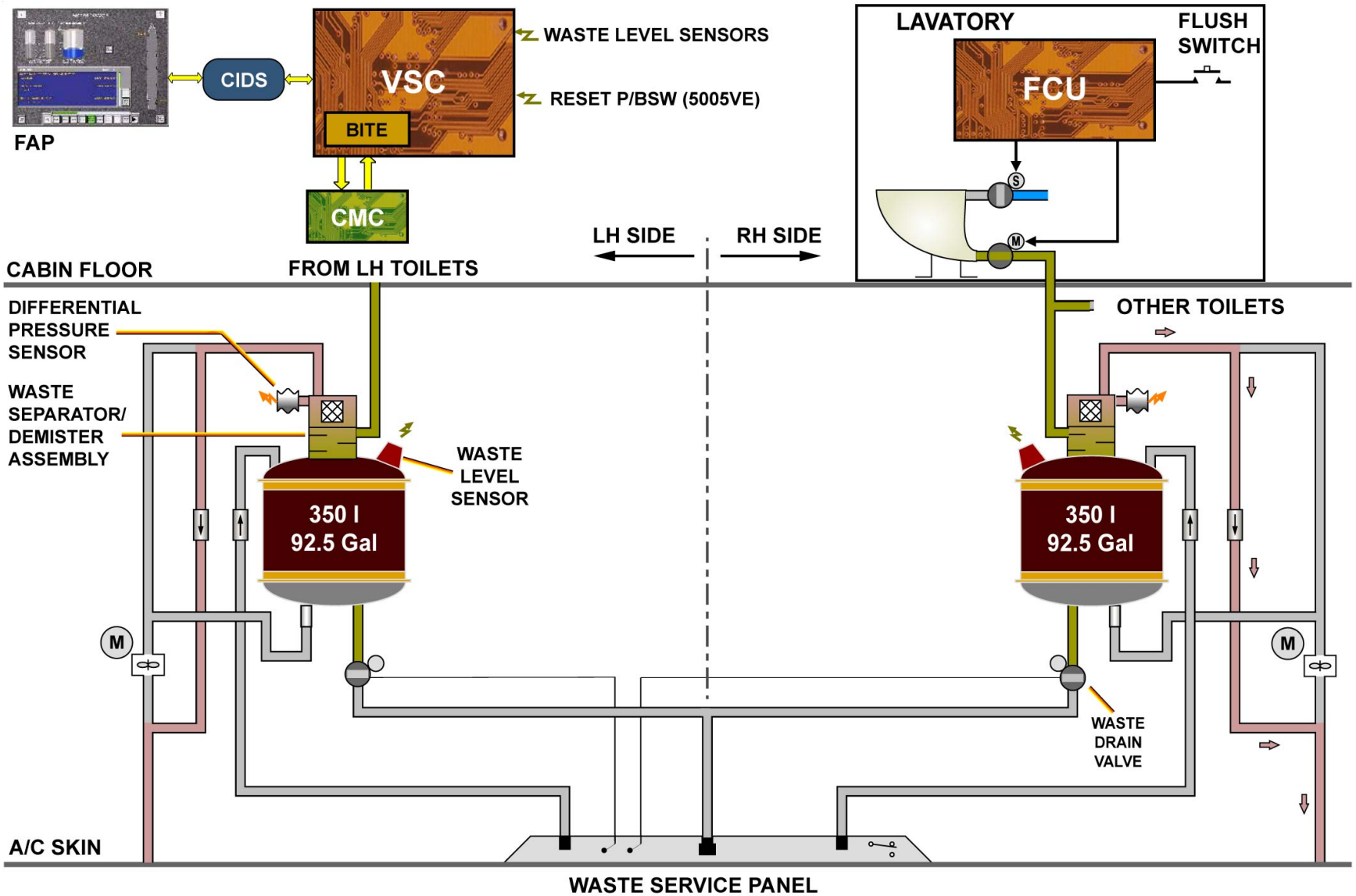

WASTE HOLDING ... RESET PUSHBUTTON SWITCH

G7508471 - G3NT1T0 - FM38D300000003

TOILET SYSTEM D/O (3)

SERVICING

The Waste Tanks are serviced from a single servicing panel. When you open the door of the Waste Service Panel:
- the Waste Service Panel door switch opens,
- the VSC stops the operation of the Vacuum Generators,
- the VSC sends a signal to the FAP.

When open, the Waste Drain-line Valve lets you connect a Waste-servicing Vehicle. Each of the Drain Handles operates its Drain Valve through a cable. The electrical connection on the Drain Valves signals the VSC when the valve is in the open or closed position.
During servicing, toilet use is inhibited by automatic deactivation of the FCU. Each flush connection on the Waste Service Panel lets its tank to be rinsed. The water pressure makes the nozzles turn during the cleaning of the waste holding tanks. The water removes the unwanted material from the walls of the tank and the Waste Level Sensors.

G7508471 - G3NT1T0 - FM38D300000003

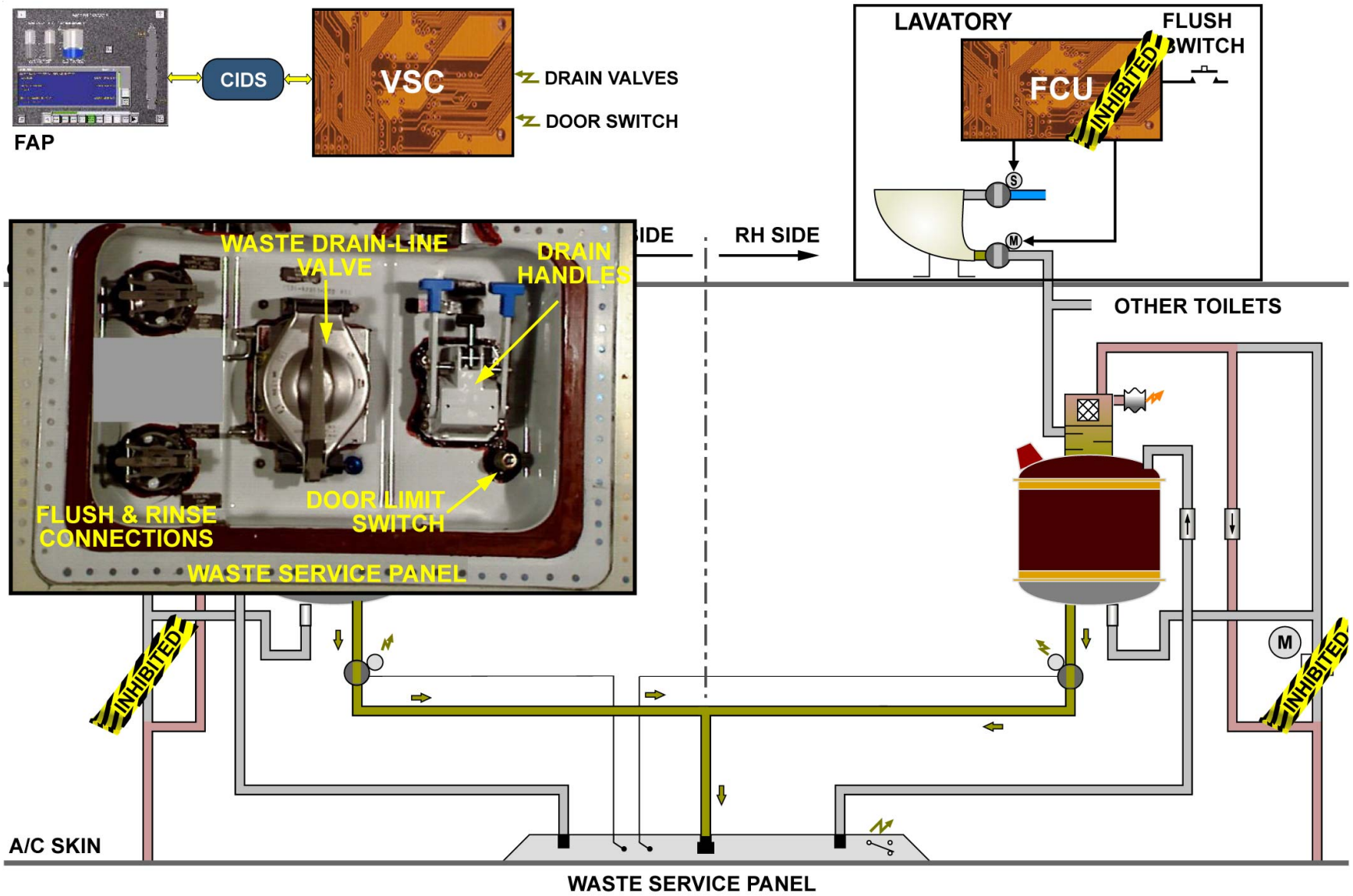

SERVICING

G7508471 - G3NT1T0 - FM38D300000003

WASTE SYSTEM D/O (3)

DRAIN VALVE

Waste water disposal is achieved by gravity on ground and by differential pressure and gravity action in flight. The diaphragm type drain valve controls the flow of waste water and prevents permanent leakage of cabin air through the drain lines.

DRAIN MASTS

The waste water is discharged overboard through two drain masts. To prevent ice formation, the drain masts are electrically heated on ground and in flight.

G7508471 - G3NT1T0 - FM38D4F38AG0102

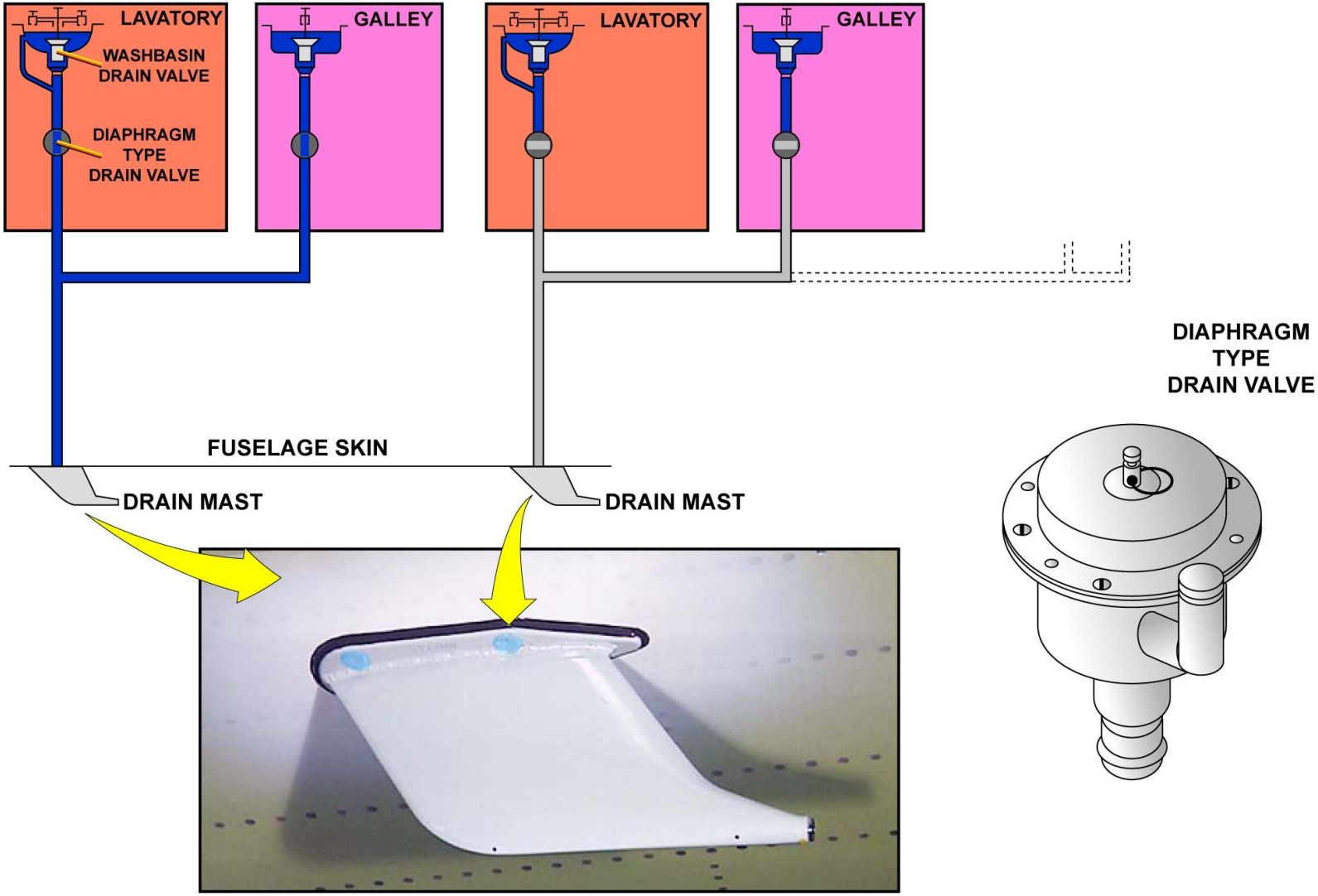

DRAIN VALVE & DRAIN MASTS

G7508471 - G3NT1T0 - FM38D4F38AG0102

WATER AND WASTE MCDU PAGES (2)

TROUBLE SHOOTING DATA

When the TROUBLE SHOOTING DATA key is pressed, the screen shows the date and time when the failure occurred, the failure message and the related coded parameters. The trouble shooting data represents a system snapshot at failure occurrence. The trouble shooting data table or the floppy disk provided by manufacturer will help you decode the message.

0	1	2	3	4
7C60	1000	1004	3F01	004B
002B	06:40:	7 06/0	7/93 8	
5	6	7	8	

Word

0 : Failure definition
1 : Hard unit internal fault
2 : Soft unit internal fault
3 : Operational modes
4 : Error dependent data
5 : Error dependent data
6 : Universal time correlation
units of mn - tens of mn -
units of hours - tens of hours
7 : Universal time correlation and date
tens of month - units of day -
tens of day - tens of mn
8 : Date and last entry flag
entry flag - units of year -
tens of year - units of month

TROUBLE SHOOTING DATA

G7508471 - G3NT1T0 - FM38P3MCDUTST02

WATER AND WASTE MCDU PAGES (2)

SYSTEM TEST

When the TEST key is pressed, the whole vacuum waste system is tested.
The systems test includes the return of the power up test, the cyclic tests and the continuous tests.
The TEST OK legend is displayed if no failure is detected.
Ground Scanning
Displayed all failures detected after starting this submenu, trouble shooting data are selectable for every displayed failure.
Ground Report
Displayed all failures occurring on ground,
Trouble Shooting Data
Displays the trouble shooting data of all failures are displayed by the menus :
- Last Leg Report
- Previous Leg Report
- Class 3 Faults

CONFIGURATION

When the CONFIGURATION key is pressed, the lavatory configuration stored in the Vacuum System Controller (VSC) memory is indicated:
CONFIG L (configuration lavatories) and DET L (detected lavatories) are indicated through the Flush Control Unit (FCU) pin programming.
The re-initialization of the configuration has to be done:
- after installation of a new VSC.
- in case of CMS fault message LAV CONFIGURATION.
- if DET L and actual A/C configuration are the same but different from CONFIG L.

This will automatically modify the CONFIG L.
If DET L is not identical to the actual lavatory configuration, pin programming and/or wiring checks have to be performed according to the Trouble Shooting Manual (TSM).

If the third waste holding tank is installed the CONFIG L and DET L must show OPT TANK.

G7508471 - G3NT1T0 - FM38P3MCDUTST02

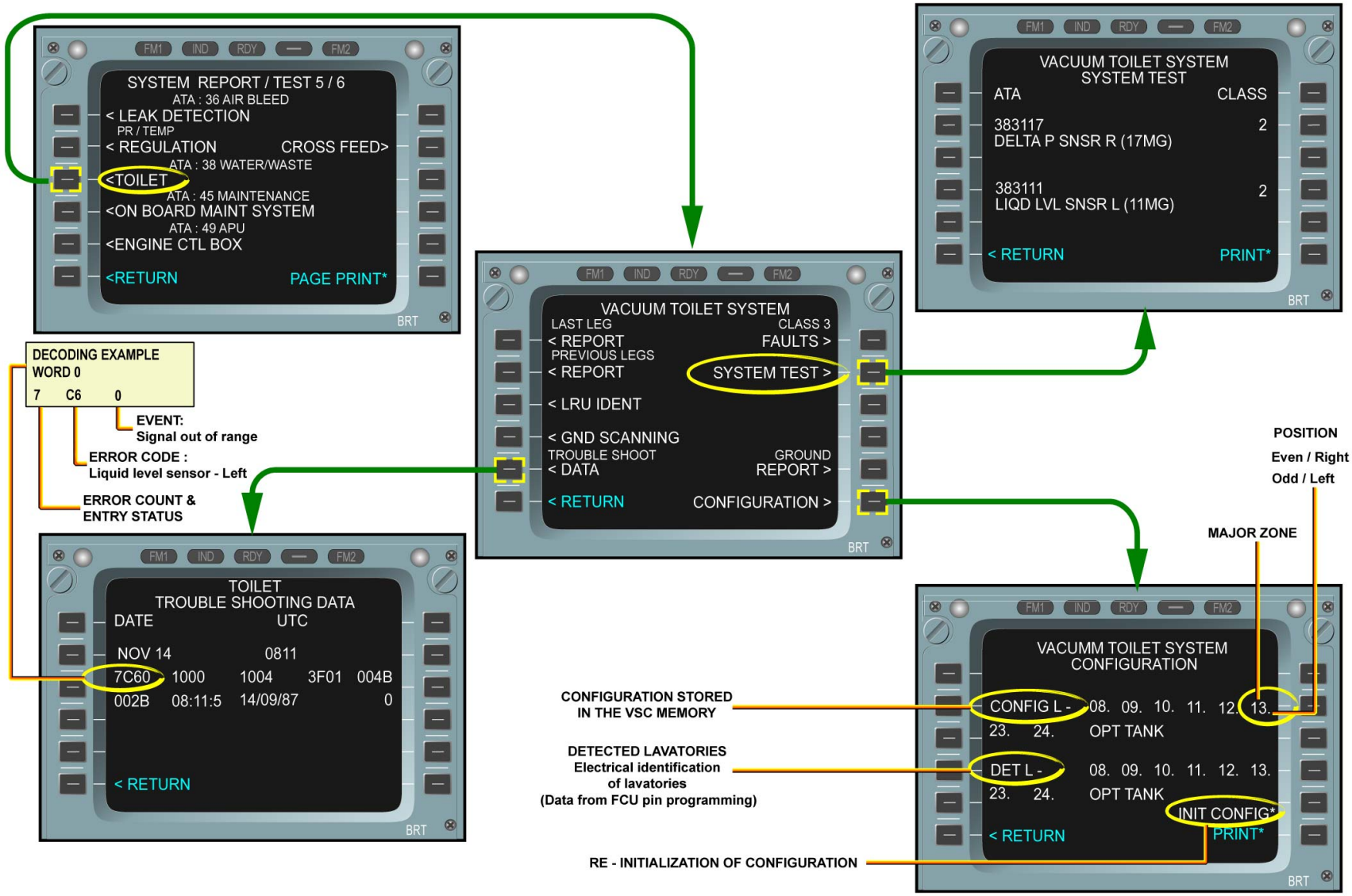

SYSTEM TEST & CONFIGURATION

G7508471 - G3NT1T0 - FM38P3MCDUTST02

AIRBUS S.A.S.
31707 BLAGNAC cedex, FRANCE
STM
REFERENCE G7508471
NOVEMBER 2008
PRINTED IN FRANCE
AIRBUS S.A.S. 2008
ALL RIGHTS RESERVED

AN EADS COMPANY

A330-200/300
TECHNICAL TRAINING MANUAL
MAINTENANCE COURSE - T1 (LVL 2&3) (RR Trent 700)
ONBOARD MAINTENANCE SYSTEMS

This document must be used for training purposes only

Under no circumstances should this document be used as a reference

It will not be updated.

All rights reserved
No part of this manual may be reproduced in any form,
by photostat, microfilm, retrieval system, or any other means,
without the prior written permission of AIRBUS S.A.S.

AIRBUS Environmental Recommendation
Please consider your environmental responsability before printing this document.

ONBOARD MAINTENANCE SYSTEMS

Onboard Maintenance SYS Line MAINT Briefing (2) 2

CENTRAL MAINTENANCE SYSTEM

CMS General Description (3) 28
CMS Message Description (3) 40
CMS Menus Description (2) 50
CMS Operation in Normal Mode (2) 56
CMS Operation in Interactive Mode (2) 74
CMS in Normal Mode D/O (3) 86
CMS Back-Up Functions (2) 96
CMS Interface (3) 104
Servicing Report D/O (3) 106
Avionics Configuration Reports D/O (3) 116

PRINTER

Printer D/O (3) 126

UP AND DOWN LOADING SYSTEM

Up and Down Loading D/O (3) 130

MAINTENANCE PRACTICE

Onboard Maintenance Systems Base Maintenance (3) 140
E-Logbook Description (option) (2) 154
AIRMAN Gate Description (option) (2) 160

ONBOARD MAINTENANCE SYS LINE MAINT BRIEFING (2)

ACQUISITION

The acquisition of A/C system data is done by 4 major electronic systems:
- the ECAM system that monitors the operational data in order to display warnings and system information in normal and abnormal situations,
- the Flight Data Recording System (FDRS), which is mandatory, records A/C operational parameters for incident investigation,
- the Central Maintenance System (CMS) that monitors the various systems BITE data in order to record the system failures,
- the Aircraft Condition and Monitoring System (ACMS) that records significant operational parameters in order to monitor the engines, the aircraft performance and to analyze specific A/C problems.

RETRIEVAL

All the information can be retrieved through:
- the ECAM displays,
- the MCDUs,
- the printer,
- the Air Traffic Service Unit (ATSU) to a ground station, via the Aircraft Communication Addressing and Reporting System (ACARS) function,
- the downloading system and the recorders.

ANALYSIS

Maintenance operations can be divided into three groups:
- short-term troubleshooting, which is done with the help of the ECAM and the CMS through the MCDUs and the printed or ATSU down-linked reports via the ACARS function,
- in-depth troubleshooting, which is done with the help of the CMS and the ACMS through the MCDUs and printed or downloaded reports,
- long-term maintenance, which is done with the help of the ACMS and the FDRS ATSU down-linked and downloaded reports or recorded data.

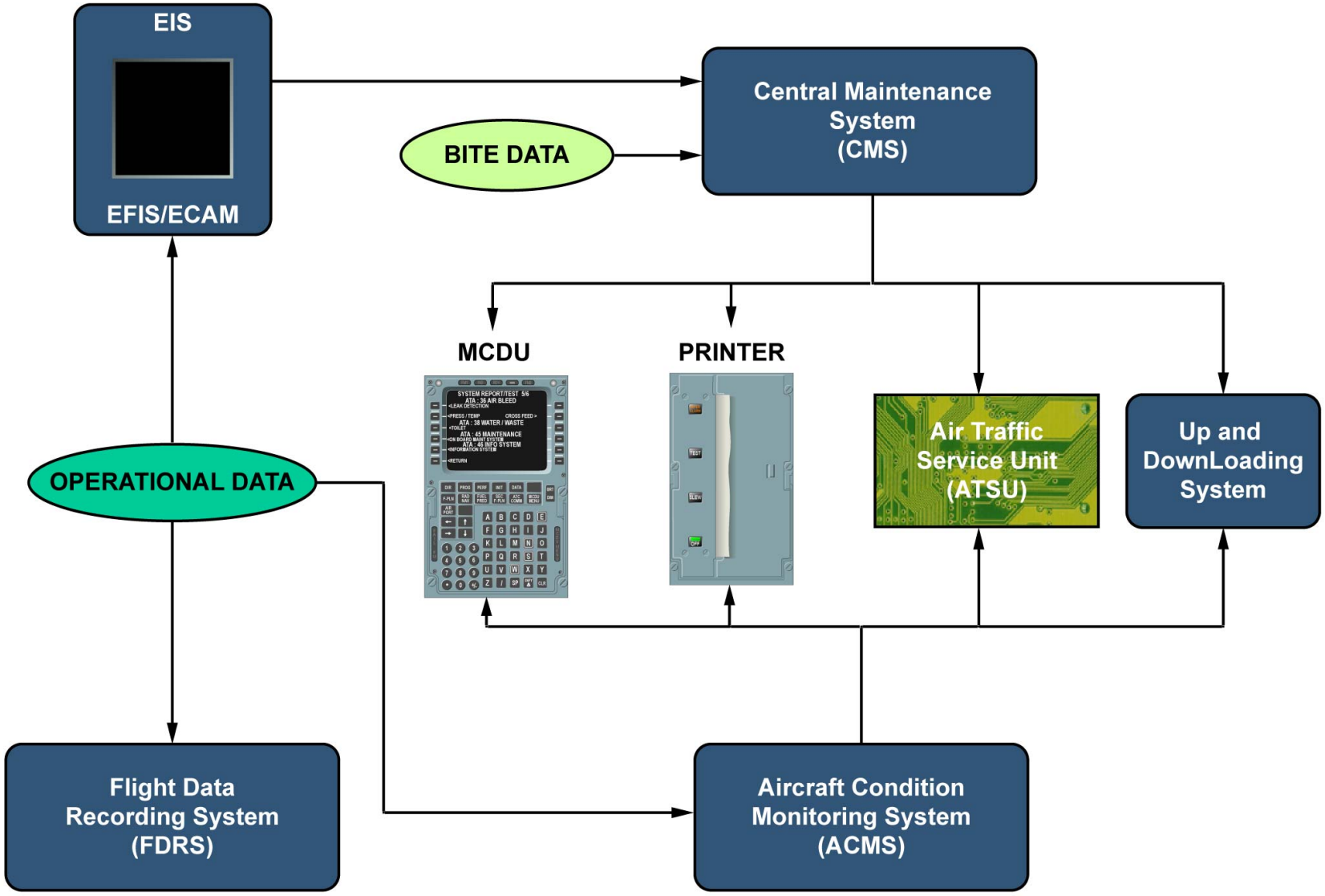

ACQUISITION ... ANALYSIS

G7508471 - G3NT1T0 - FM45B1000000001

ONBOARD MAINTENANCE SYS LINE MAINT BRIEFING (2)

COCKPIT EFFECT

After a malfunction, the crew reports the cockpit effect in the log book. The fault symptoms, relative to the cockpit effect, can be as follows:
- a warning/malfunction + CMS Fault message (with possible related warnings and system identifiers),
- a warning/malfunction alone,
- a CMS fault message alone.

POST FLIGHT REPORT

For the class 1 and 2 failures of CMS monitored systems, the Post Flight Report (PFR) gives access to the concerned list of faults in the Trouble Shooting Manual (TSM). For this function, it gives information including ECAM warning messages, if any exist, fault messages with their source, ATA references and IDENTIFIERS LIST. When the PFR printout is not available, this information can be retrieved through the MCDU, in normal mode or Interactive mode. A specific document (SIL 00-038 for A340 200/300, SIL 00-078 for A 340 500/600 and SIL 00-041 for A330) and the maintenance knowledge will be used to remove spurious messages.

G7508471 - G3NT1T0 - FM45B1000000001

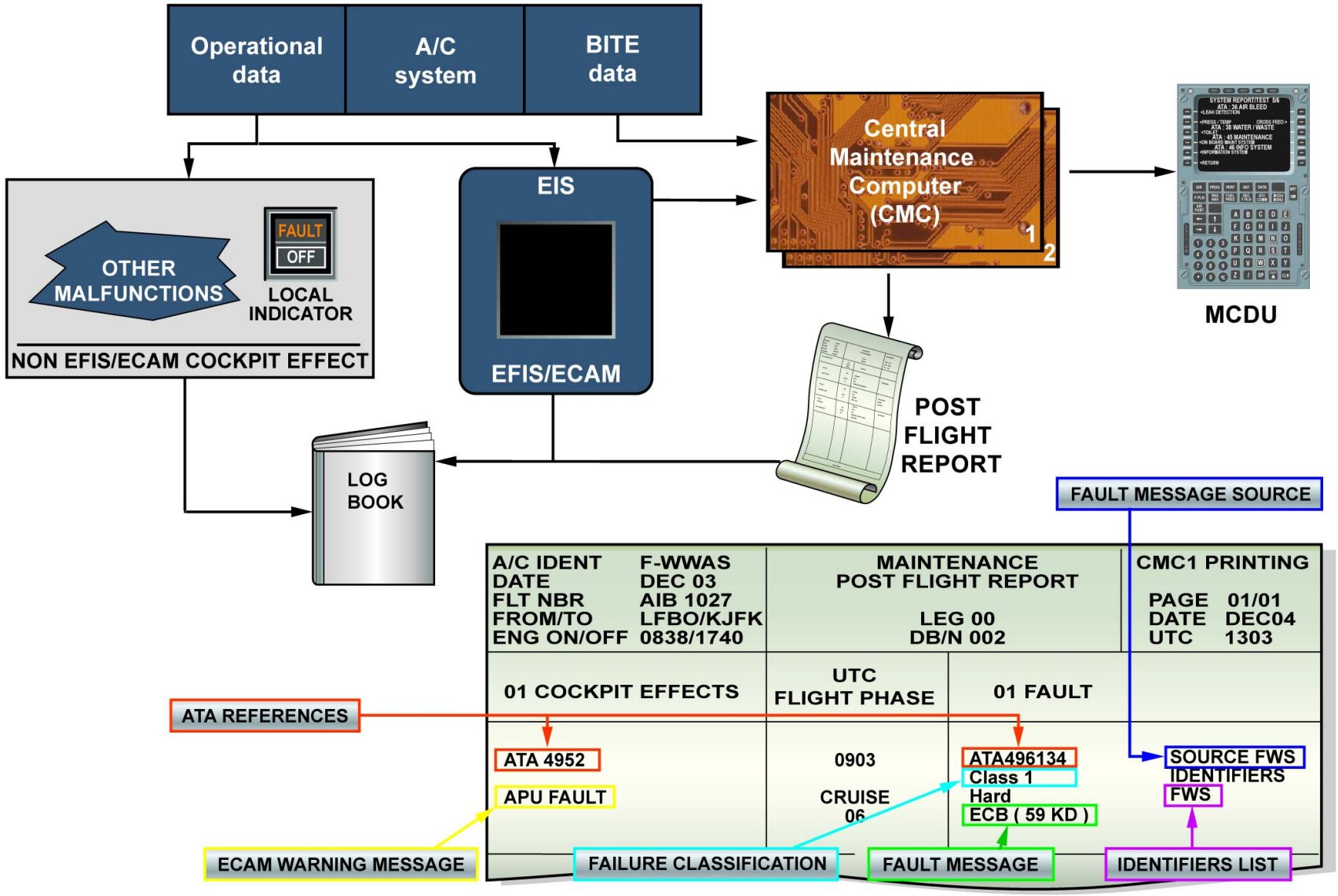

COCKPIT EFFECT & POST FLIGHT REPORT

G7508471 - G3NT1T0 - FM45B100000001

ONBOARD MAINTENANCE SYS LINE MAINT BRIEFING (2)

TROUBLE SHOOTING MANUAL ENTRY

The CMS report information gives direct access to the fault isolation procedure task numbers in page block 101 of the TSM. You have to refer to the "WARNINGS/MALFUNCTIONS" column to find the reported problem. If the fault symptoms such as ECAM, Electronic Flight Instrument System (EFIS), local warning, crew observation or CMS do not let directly find the right page block 101, you can refer to the related section of the index part. Then you link the CMS message. A WARNINGS/MALFUNCTIONS with its correlated CMS fault message could have several related fault isolation procedure tasks according to the systems which have detected the fault. The PFR gives an identifiers list, which must be compared with the identifiers item of the CMS fault messages part in page block 101 of the TSM. This task number gives the right access for page block 201 of the TSM.

G7508471 - G3NT1T0 - FM45B1000000001

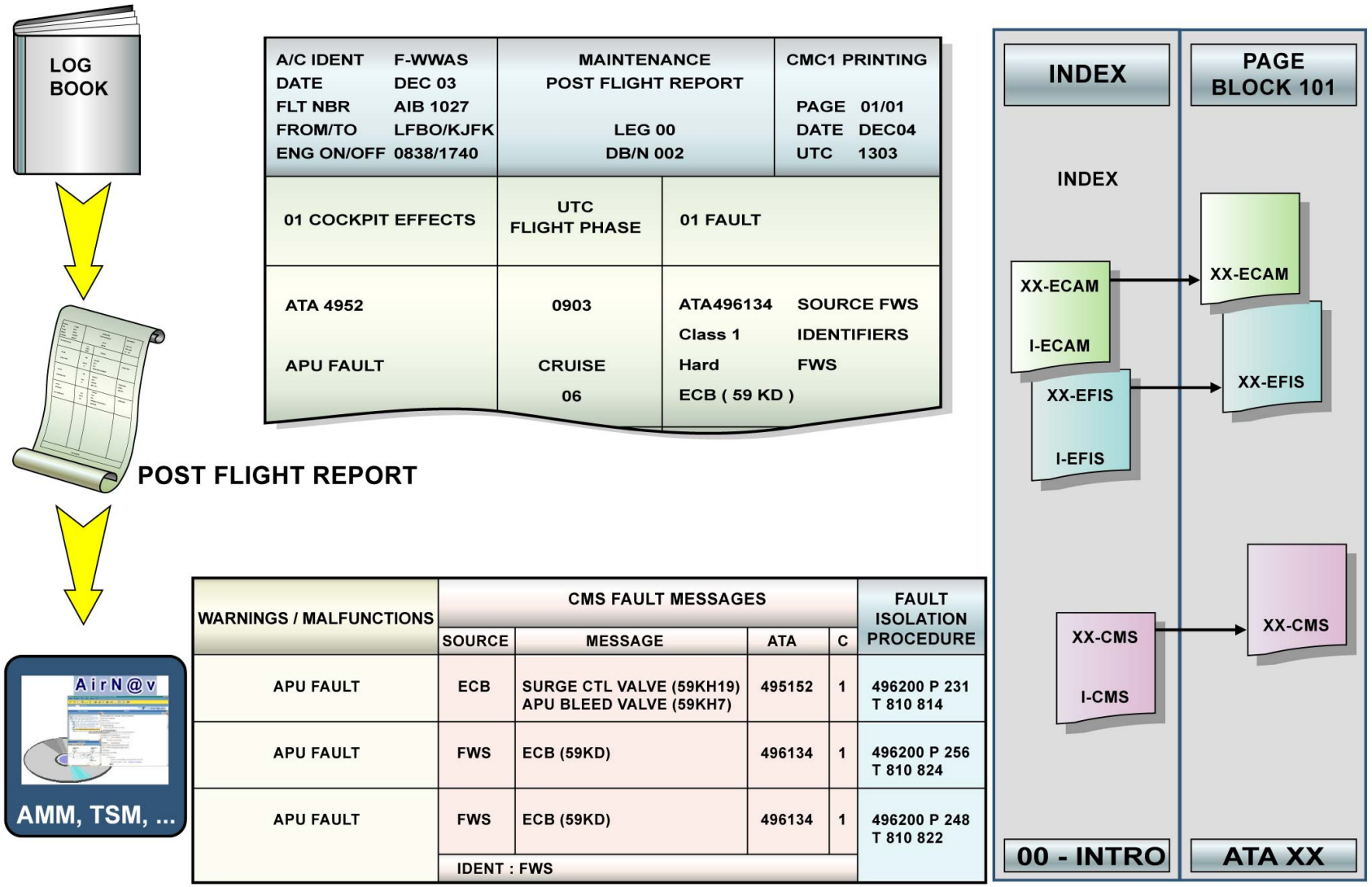

TROUBLE SHOOTING MANUAL ENTRY

G7508471 - G3NT1T0 - FM45B100000001

ONBOARD MAINTENANCE SYS LINE MAINT BRIEFING (2)

FAULT ISOLATION PROCEDURE

The related fault isolation procedure task in page block 201 of TSM has a presentation of possible causes and the fault confirmation, for example by an operational test, power-up test or ground scanning. It also gives the fault isolation procedure including Line Replaceable Unit (LRU) removal/installation, wiring check, etc. In addition, a list of useful aircraft documentation references is given in the TSM.

G7508471 - G3NT1T0 - FM45B1000000001

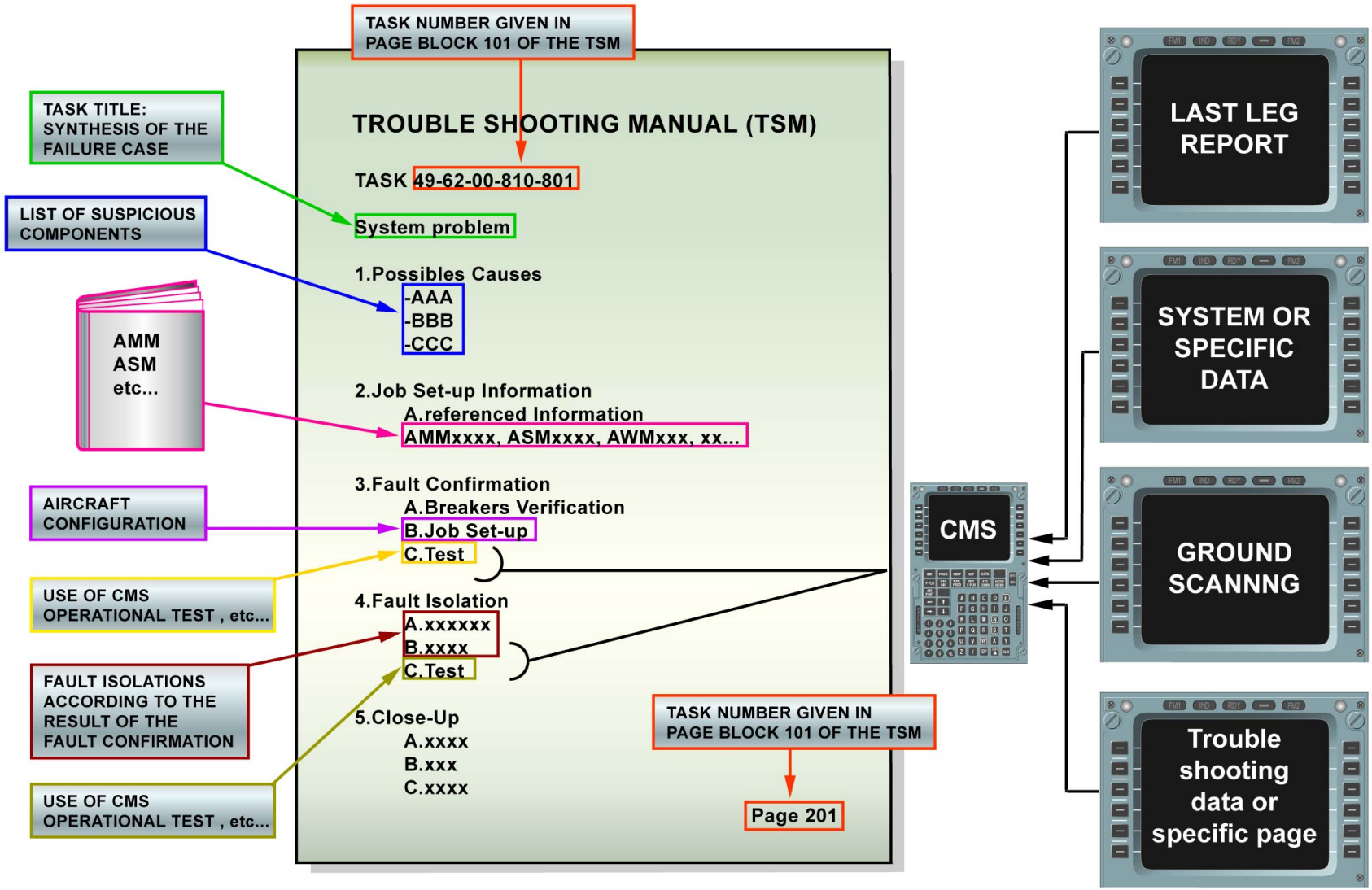

FAULT ISOLATION PROCEDURE

G7508471 - G3NT1T0 - FM45B100000001

ONBOARD MAINTENANCE SYS LINE MAINT BRIEFING (2)

PROCEDURE TO LOAD THE DB OF THE CMC (DLS/DLRB)

The Central Maintenance Computer (CMC) DataBase (DB) is made up of a CMC filter DB, a servicing report DB and a diskette configuration DB. Each DB must be individually prepared prior to the loading of the entire CMC DB, by using the related maintenance tool.

NOTE: This procedure is similar for any computer, which can receive uploads through the up and down loading system.

G7508471 - G3NT1T0 - FM45B1000000001

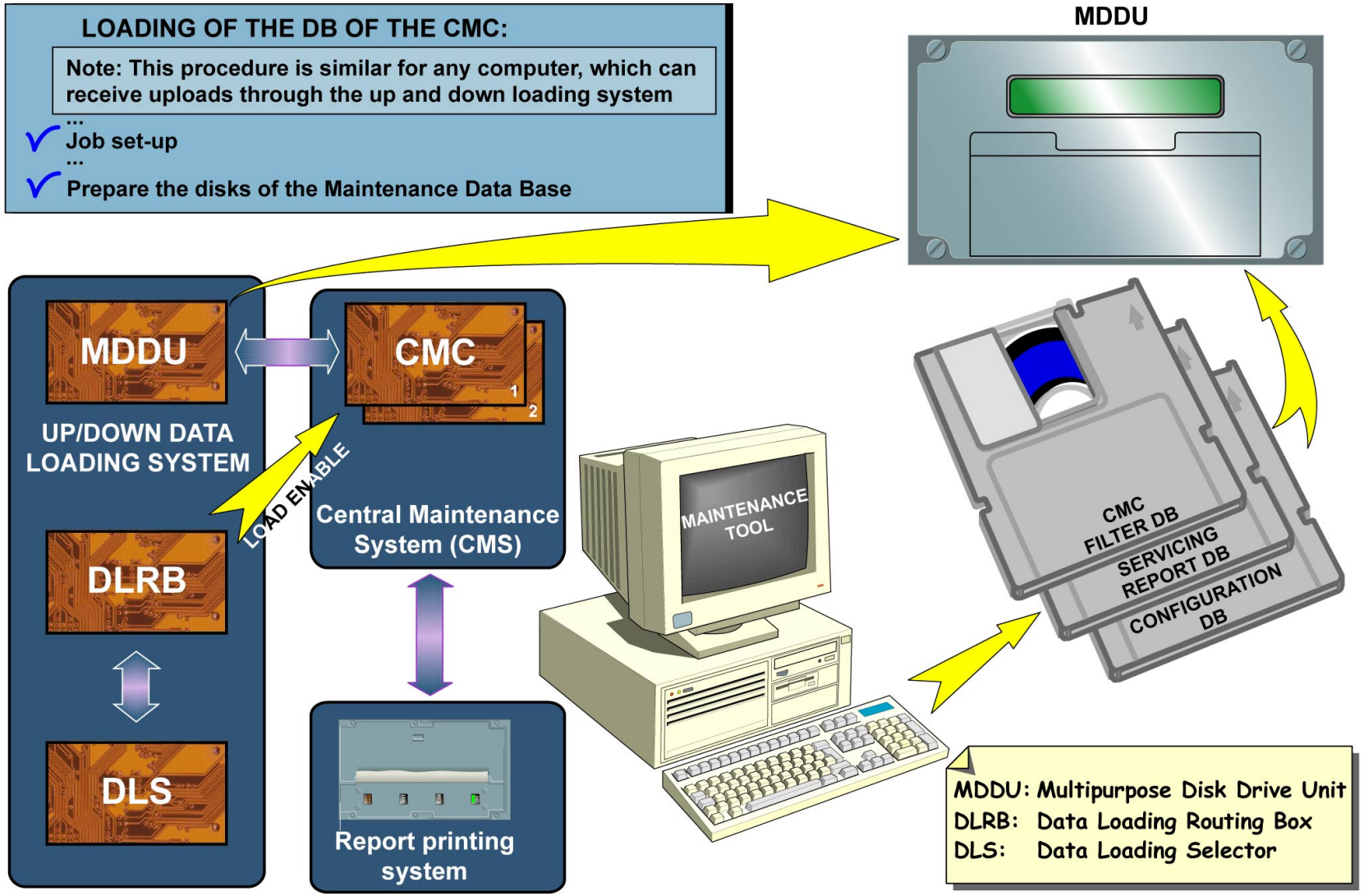

PROCEDURE TO LOAD THE DB OF THE CMC (DLS/DLRB)

ONBOARD MAINTENANCE SYS LINE MAINT BRIEFING (2)

PROCEDURE TO LOAD THE DB OF THE CMC (DLS/DLRB) (continued)

LOADING OF THE DB OF THE CMC

Switch the Data Loading Selector (DLS) ON and check that Multipurpose Disk Drive Unit (MDDU) is ready. Check that the targeted CMC is not selected on the DLS.

NOTE: This procedure is similar for any computer, which can receive uploads through the up and down loading system.

Reset both CMCs by using their respective C/B.
Select the targeted CMC through the DLS, insert the prepared disk into the MDDU.
Monitor the DB transfer and make a check on completion until "TRANSFERT COMPLETE",

NOTE: If a problem occurs during the uploading procedure and the TRANSFER COMPLETE indication is not shown at the end, you must do the procedure again in order to make sure that the computer is fully loaded with data.

Deselect the targeted CMC on DLS, do the same procedure for the opposite CMC, wait for completion of the automatic DB content printout and remove the disk, deselect the target CMC and switch the DLS OFF, the DB of the CMC is now loading.

G7508471 - G3NT1T0 - FM45B1000000001

LOADING OF THE DB OF THE CMC:

- ✓ On the DLS: set the ON / OFF switch to ON
- ✓ On the DLS: push the PREV or NEXT key until you get the CMC1 indication

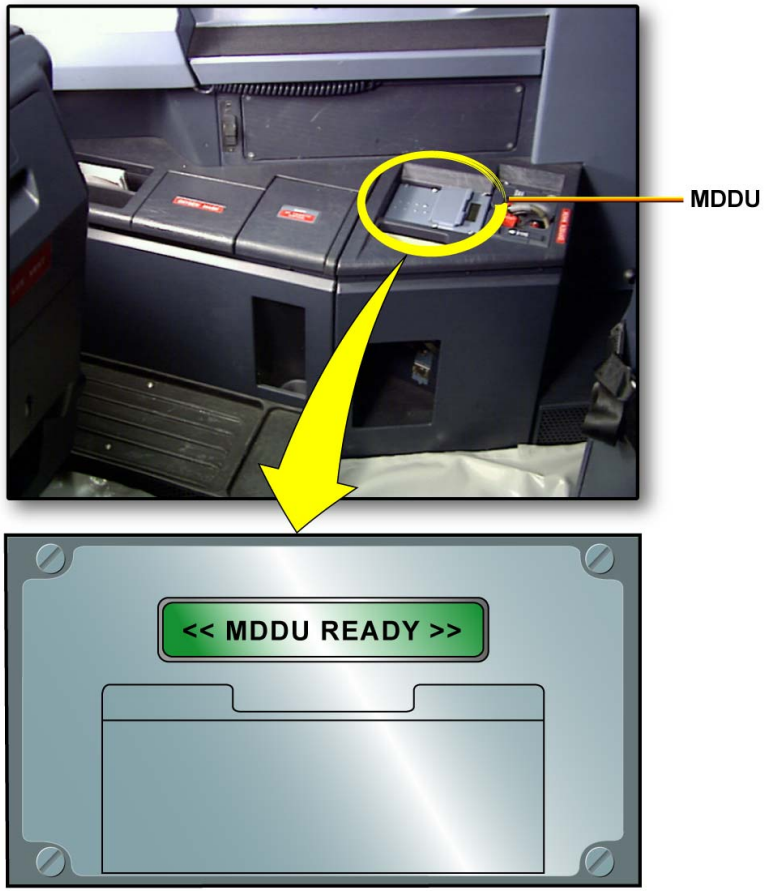

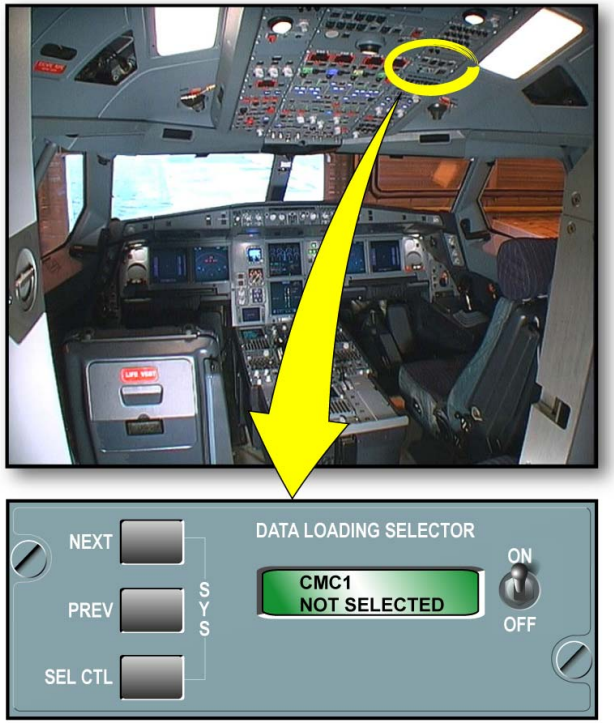

The task description is done for CMC 1. The procedure is the same for CMC 2.

PROCEDURE TO LOAD THE DB OF THE CMC (DLS/DLRB) - LOADING OF THE DB OF THE CMC

LOADING OF THE DB OF THE CMC:

...

- ✓ Open the C/Bs 3TM1 and 3TM2 (742VU and 722VU)
- ✓ Close the C/Bs 3TM1 and 3TM2

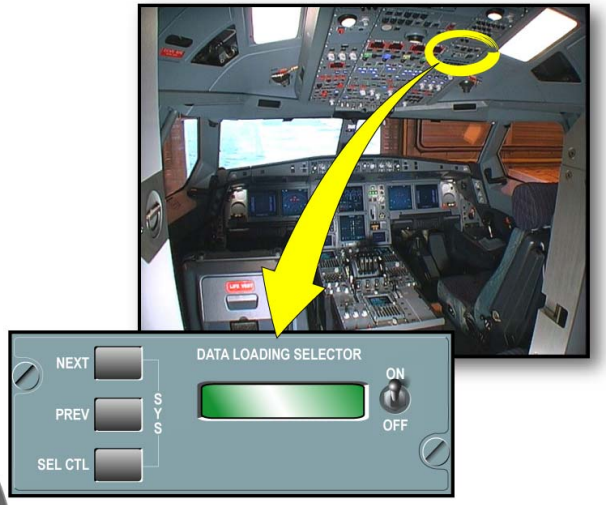

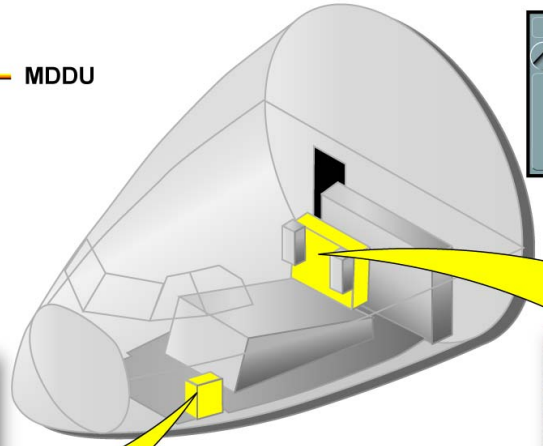

742VU

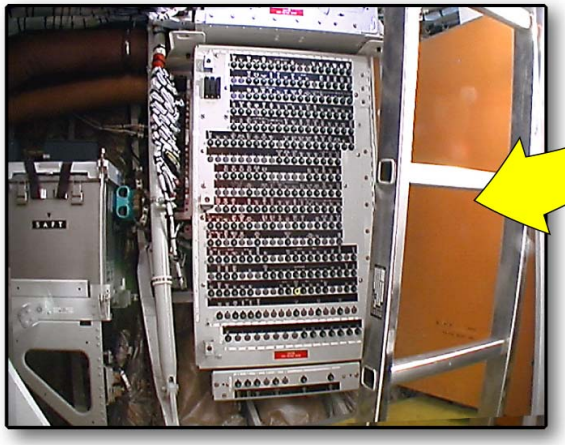

722VU

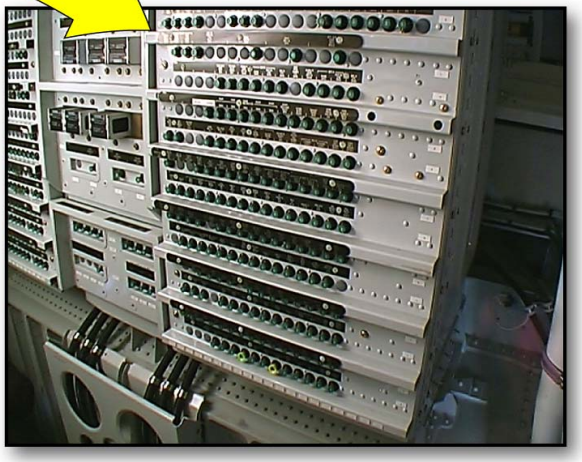

PROCEDURE TO LOAD THE DB OF THE CMC (DLS/DLRB) - LOADING OF THE DB OF THE CMC

LOADING OF THE DB OF THE CMC:

...

- ✓ On the DLS: push the SEL CTL key (CMC1 SELECTED)
- ✓ On the MDDU: put the disk into the disk drive

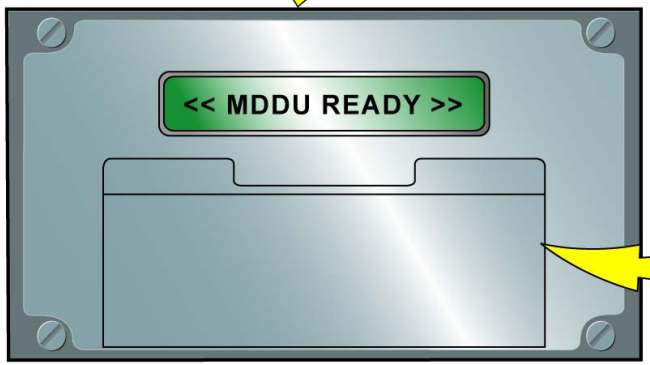

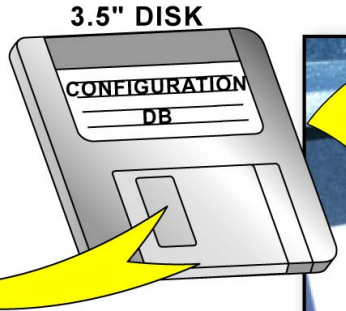

PROCEDURE TO LOAD THE DB OF THE CMC (DLS/DLRB) - LOADING OF THE DB OF THE CMC

LOADING OF THE DB OF THE CMC:

...

✓ Monitor DATA TRANSFER

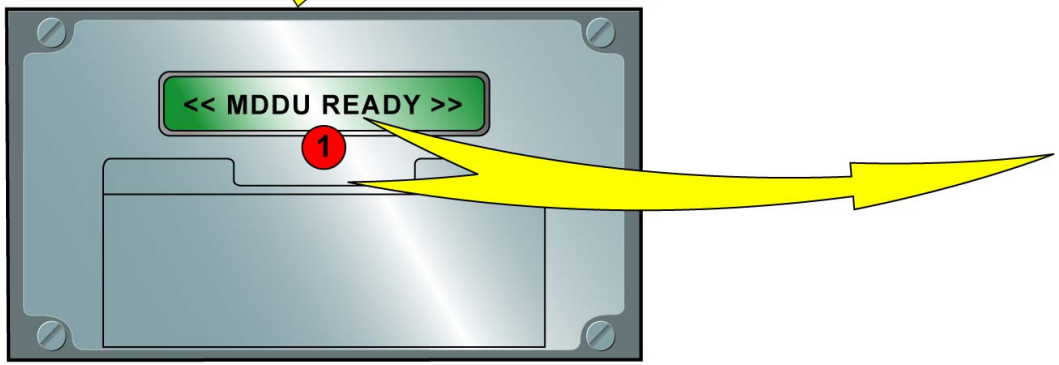

2 READY
3 WAIT RESPONSE
4 TRANSF IN PROG
5 BUS NUMBER
6 TRANSF COMPLETE

PROCEDURE TO LOAD THE DB OF THE CMC (DLS/DLRB) - LOADING OF THE DB OF THE CMC

LOADING OF THE DB OF THE CMC:

...

- ✓ On the DLS: push the SEL CTL key (CMC1 NOT SELECTED)
- ✓ When the automatic printing is completed, on the MDDU remove the disk from the disk drive

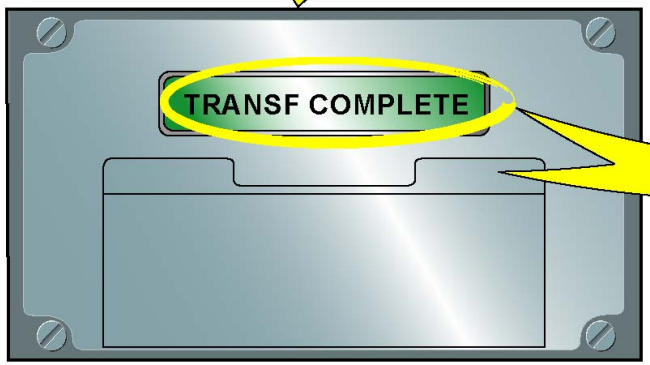

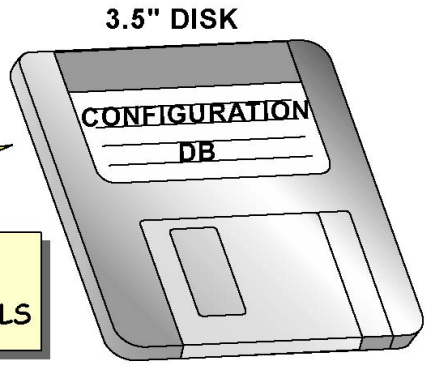

When the loading is completed, don't forget to switch off the DLS

PROCEDURE TO LOAD THE DB OF THE CMC (DLS/DLRB) - LOADING OF THE DB OF THE CMC

ONBOARD MAINTENANCE SYS LINE MAINT BRIEFING (2)

PROCEDURE TO LOAD THE DB OF THE CMC (DLS/DLRB) (continued)

DO A CHECK ON THE MCDU OF THE REFERENCE OF THE DATA LOADED INTO BOTH CMCS

From the SYSTEM REPORT/TEST page get access to the target CMC BITE menu. Make sure that the DB reference shown on the LRU IDENT page is the same as the disk DB reference. Return to the SYSTEM REPORT/TEST page. Do the same check for opposite CMC. Put the A/C back to its initial configuration.

NOTE: Note: The three first digits refer to the CMC filter DB Number (DB/N), the three following ones refer to the servicing report DB and the three last digits to the diskette configuration DB.

G7508471 - G3NT1T0 - FM45B1000000001

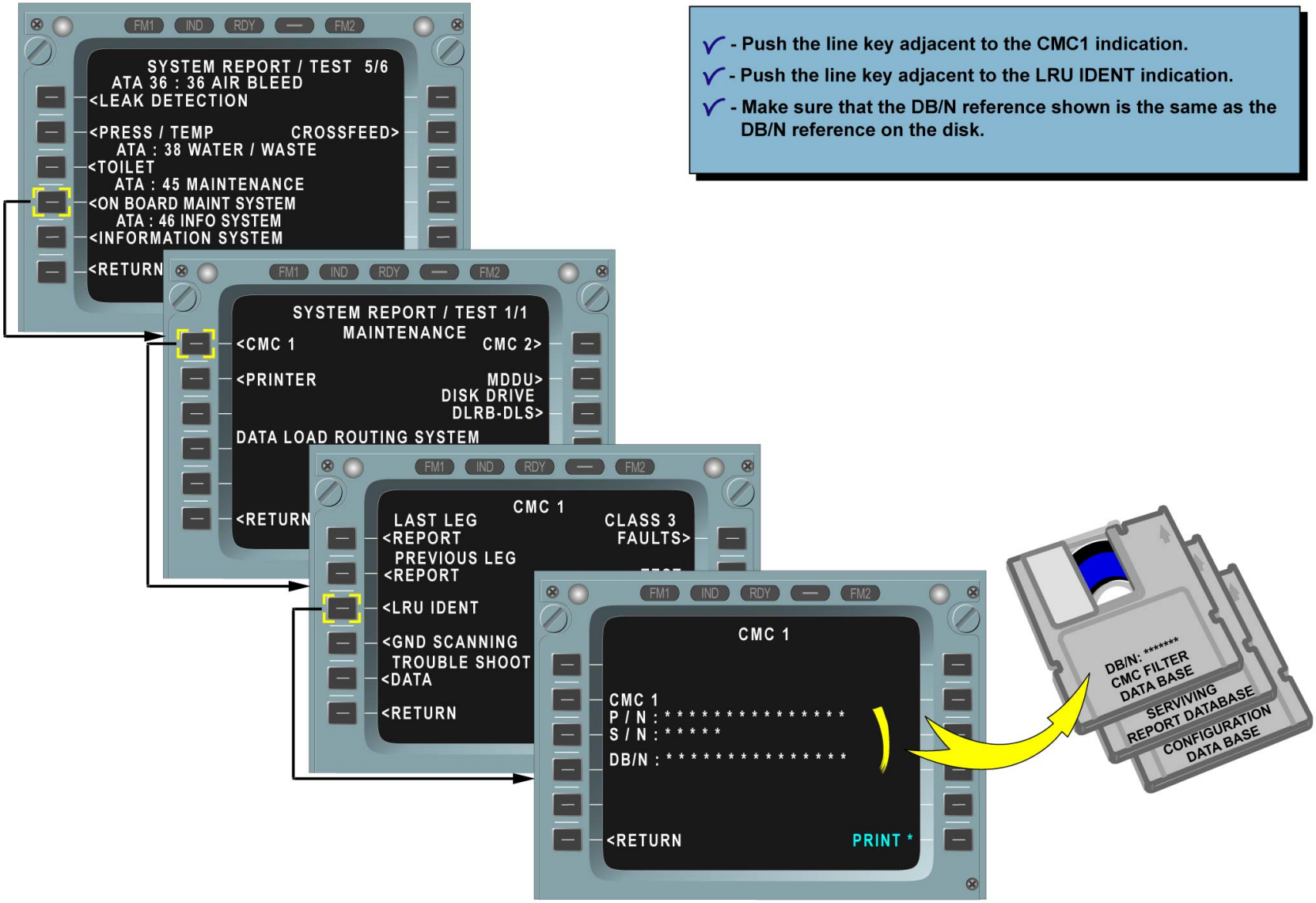

- Push the line key adjacent to the CMC1 indication.
- Push the line key adjacent to the LRU IDENT indication.
- Make sure that the DB/N reference shown is the same as the DB/N reference on the disk.

PROCEDURE TO LOAD THE DB OF THE CMC (DLS/DLRB) - DO A CHECK ON THE MCDU OF THE REFERENCE OF THE DATA LOADED INTO BOTH CMCS

ONBOARD MAINTENANCE SYS LINE MAINT BRIEFING (2)

ENABLE/DISABLE OF THE FLIGHT REPORT FILTER

From the second page of the maintenance menu access the first REPORT PROGRAMMING page. Push the filter activated toggle key to activate or inhibit the flight report filtering. Check the MCDU programming display for confirmation: YES (activation) or NO (inhibition). Put the A/C back to its initial configuration.

G7508471 - G3NT1T0 - FM45B1000000001

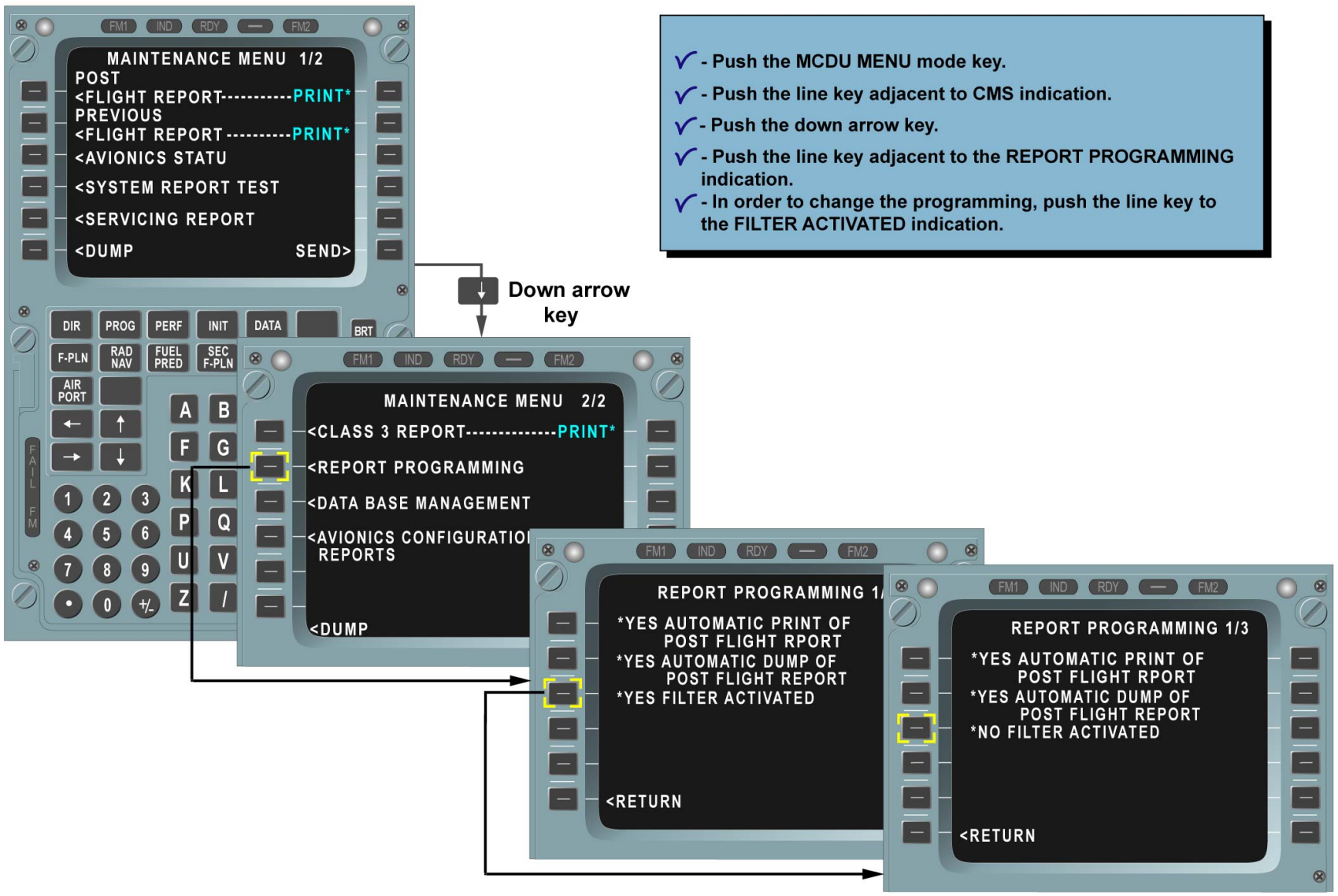

ENABLE/DISABLE OF THE FLIGHT REPORT FILTER

G7508471 - G3NT1T0 - FM45B1000000001

ONBOARD MAINTENANCE SYS LINE MAINT BRIEFING (2)

ENABLE/DISABLE OF THE SERVICING REPORT (COUPON OR COMPLETE MODE)

From the second page of the maintenance menu access the second REPORT PROGRAMMING page. Push the SERVICING COUPONS toggle key to change the servicing report programming. Check the MCDU programming display for confirmation: YES (coupon mode active) or NO (complete mode active). Put the A/C back to its initial configuration.

G7508471 - G3NT1T0 - FM45B1000000001

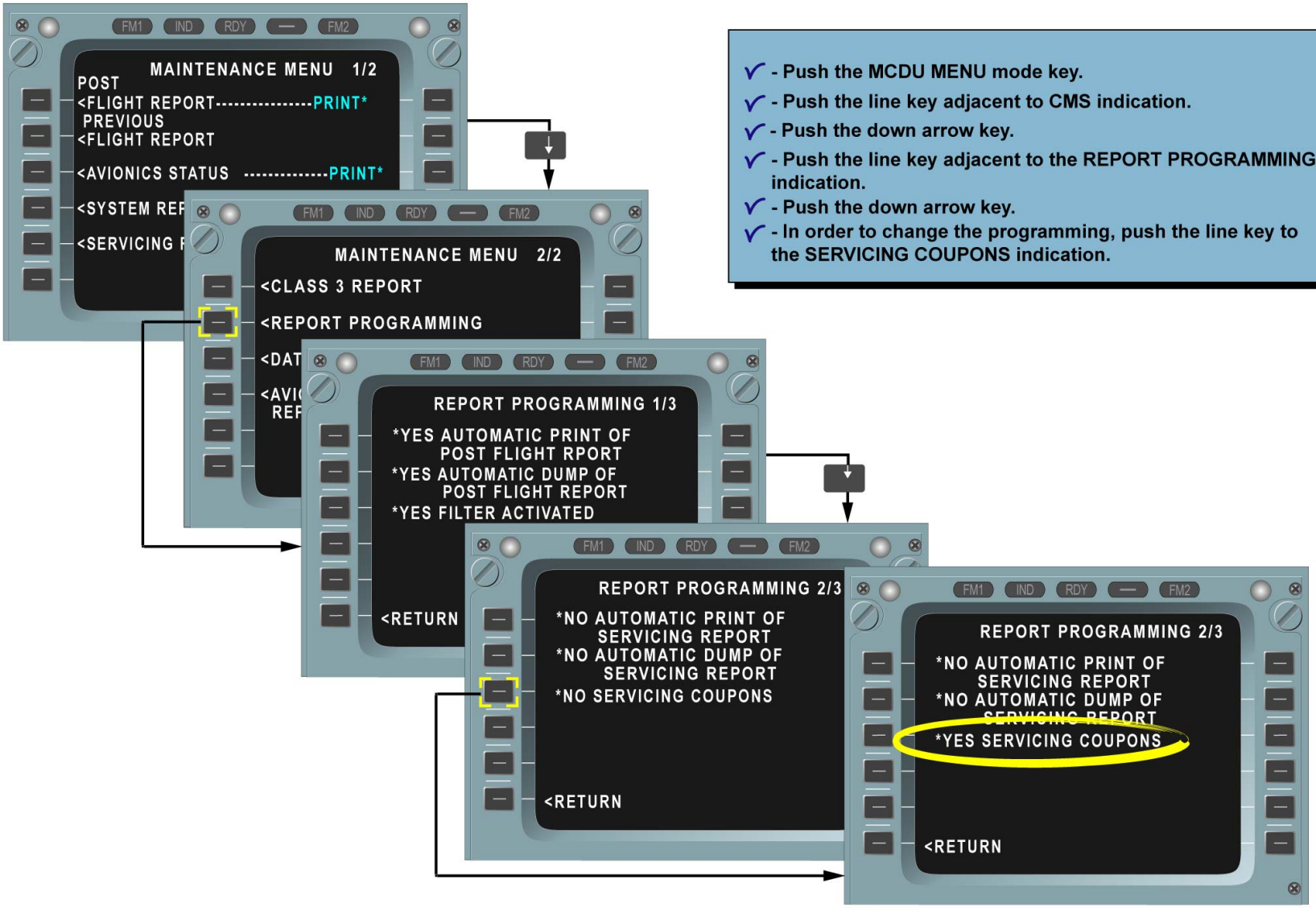

- ✓ - Push the MCDU MENU mode key.
- ✓ - Push the line key adjacent to CMS indication.
- ✓ - Push the down arrow key.
- ✓ - Push the line key adjacent to the REPORT PROGRAMMING indication.
- ✓ - Push the down arrow key.
- ✓ - In order to change the programming, push the line key to the SERVICING COUPONS indication.

ENABLE/DISABLE OF THE SERVICING REPORT (COUPON OR COMPLETE MODE)

G7508471 - G3NT1T0 - FM45B1000000001

ONBOARD MAINTENANCE SYS LINE MAINT BRIEFING (2)

PROCEDURE TO INSTALL PAPER IN THE PRINTER

This is the procedure to install paper in the printer.

REMOVAL OF THE SPOOL

If there is still paper on the spool:
- cut the paper,
- slew the engaged paper until it is fully out.

INSTALLATION OF THE PAPER ROLL

Install the new paper roll in the two grooves. Engage the paper tip in the gap between the two paper guides and push it until it engages automatically. Close the door and check that the paper feeds automatically. Put the A/C back to its initial configuration.

G7508471 - G3NT1T0 - FM45B1000000001

PROCEDURE TO INSTALL PAPER IN THE PRINTER:

- ✓ Push the lock.
- ✓ Fully open the door and remove the spool.
- ✓ Note: If there is still paper on the spool,
  - Cut, the paper
  - Put the SLEW pushbutton switch on the face of the printer until the paper is fully out.
- ✓ Install the paper roll in the two grooves and engage the free end of the paper in the opening between the two guides. Push it until it engages automatically.
- ✓ Close the access door and loock it.
- ✓ When the door is closed, the paper moves forward automatically. Cut the paper which comes out the printer.

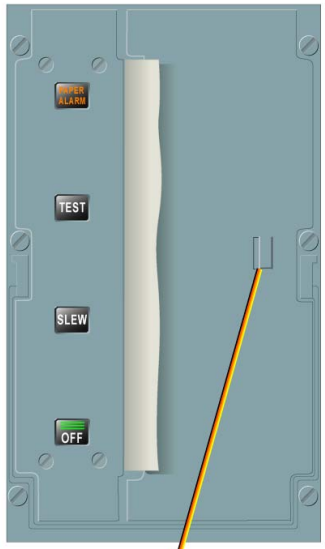

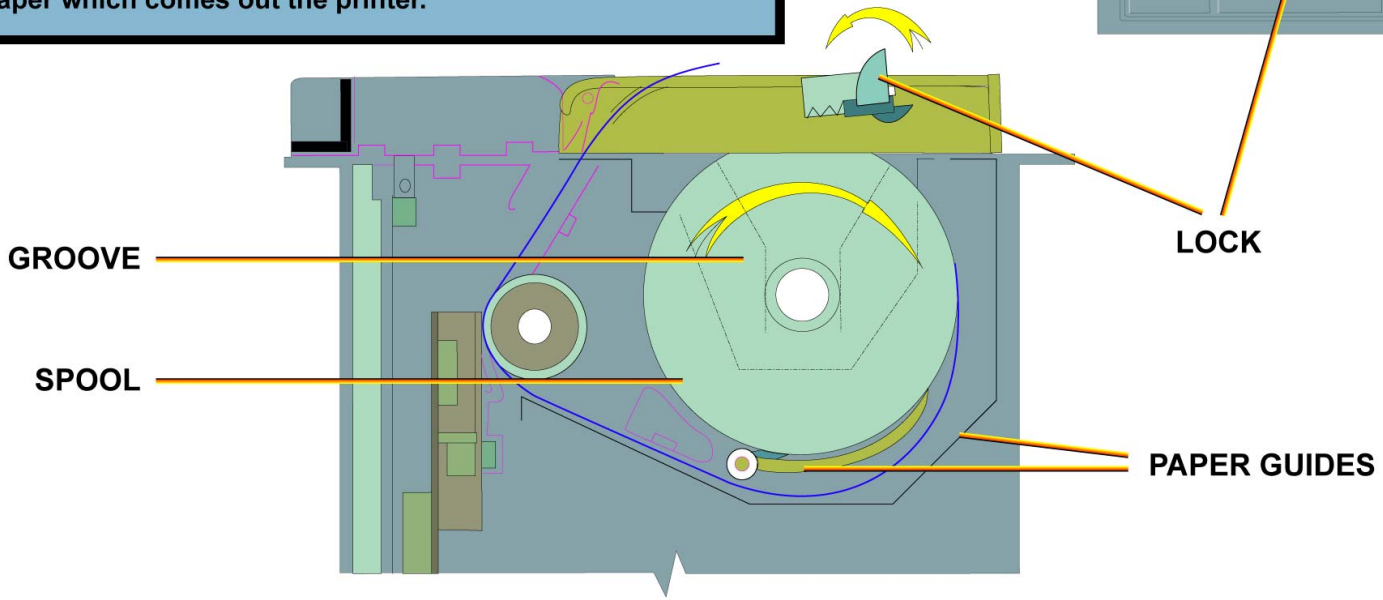

PROCEDURE TO INSTALL PAPER IN THE PRINTER - REMOVAL OF THE SPOOL & INSTALLATION OF THE PAPER ROLL

G7508471 - G3NT1T0 - FM45B1000000001

ONBOARD MAINTENANCE SYS LINE MAINT BRIEFING (2)

MAINTENANCE TIPS

The procedure to replace the paper roll is written at the back of the printer door. At the back of the door, there is also a non-jamming procedure which tells you to press slew and paper alarm together to reverse paper rotation.

G7508471 - G3NT1T0 - FM45B1000000001

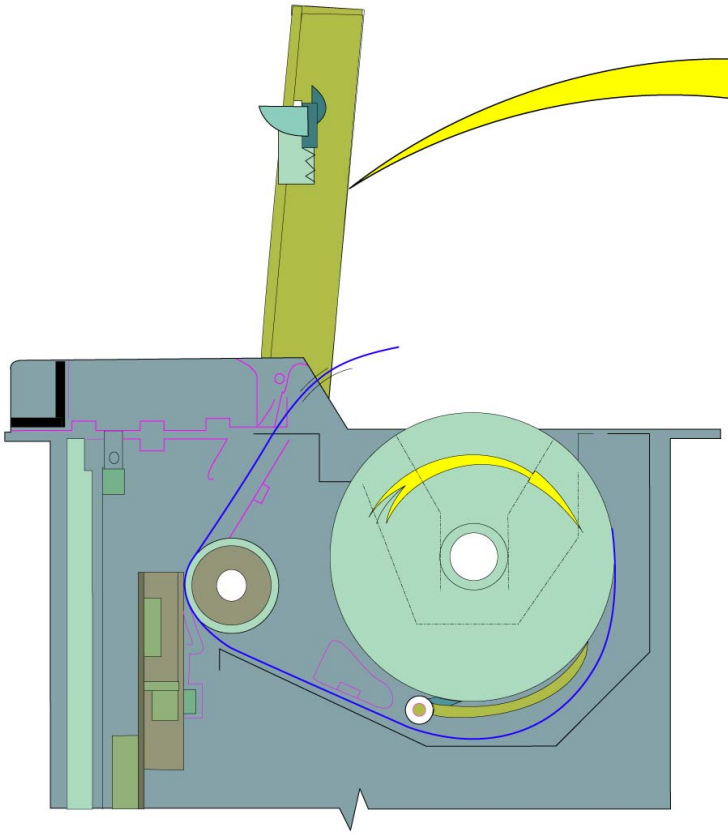

PAPER PROCEDURE

A-UNLOADING
1.REMOVE PAPER ROLL
2.TEAR PAPER SHEET
3.SLEW

B-LOADING
1.INSERT PAPER ROLL
2.TURN ROLL CLOCKWISE
3.CLOSE THE DOOR AFTER PAPER LEADING EDGE EXIT

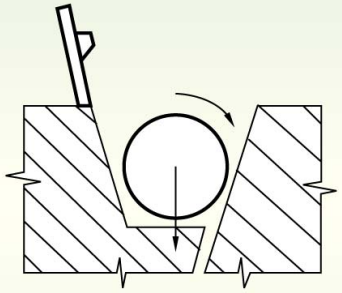

1.INSERT

C-NON.JAMMING
1.REMOVE PAPER ROLL
2.PRESS SLEW AND PAPER ALARM SIMULTANEAOUSLY TO REVERSE PAPER ROTATION

MAINTENANCE TIPS

CMS GENERAL DESCRIPTION (3)

CMS PHILOSOPHY

The Central Maintenance System (CMS) includes the BITE of all electronic systems and two fully redundant Central Maintenance Computers (CMCs). The CMS is used for short-term troubleshooting, Line Replaceable Unit (LRU) removal and system failure analysis or test.

The CMCs centralize and memorize warnings generated by the Flight Warning Computers (FWCs) and failure messages produced by the BITE function integrated in the A/C computers.

The CMS enables maintenance personnel to perform system operational tests, functional checks and read-out of BITE memory through the MCDU. Reports can be printed onboard, saved on a floppy disk via the Multipurpose Disk Drive Unit (MDDU) or transmitted to ground through the Air Traffic Service Unit (ATSU). As it is possible to perform operational tests from the cockpit, safety precautions must be observed before doing these tests (displayed on the MCDU).

G7508471 - G3NT1T0 - FM45DE000000001

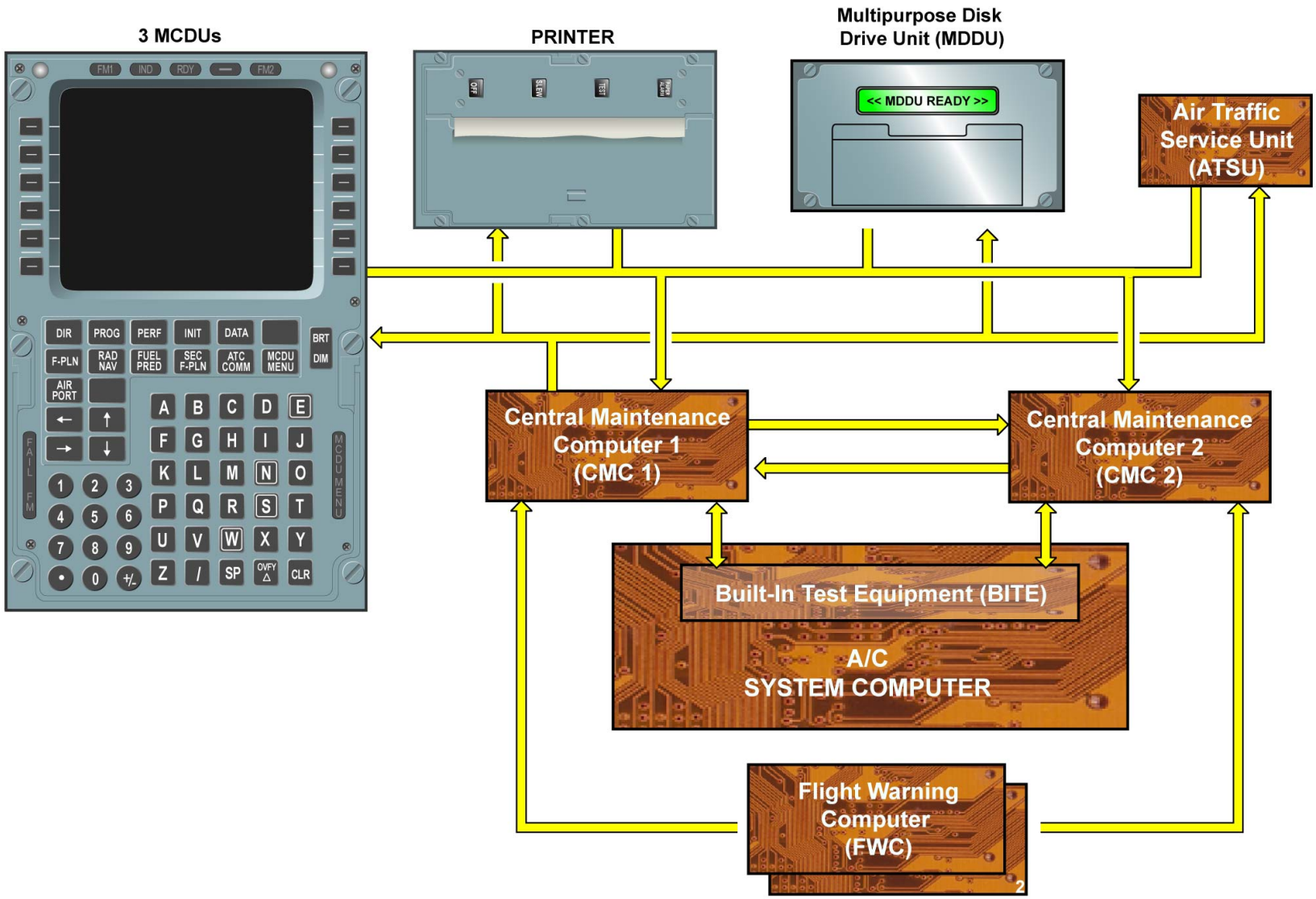

CMS PHILOSOPHY

G7508471 - G3NT1T0 - FM45DE000000001

CMS GENERAL DESCRIPTION (3)

BITE PHILOSOPHY

A system is composed of LRUs that can be:
- computers,
- sensors,
- actuators,
- and probes.

A function of the system computer is to detect and memorize any failure occurring within the systems, it is called the BITE.
During normal operation, the system is permanently monitored:
- fault detection: if a failure occurs, it can be permanent or intermittent,
- isolation: after detection, the BITE is able to identify the possible failed LRUs (snapshot of the system environment),
- memorization: a Non Volatile Memory (NVM) memorizes the cause of the failure.

G7508471 - G3NT1T0 - FM45DE000000001

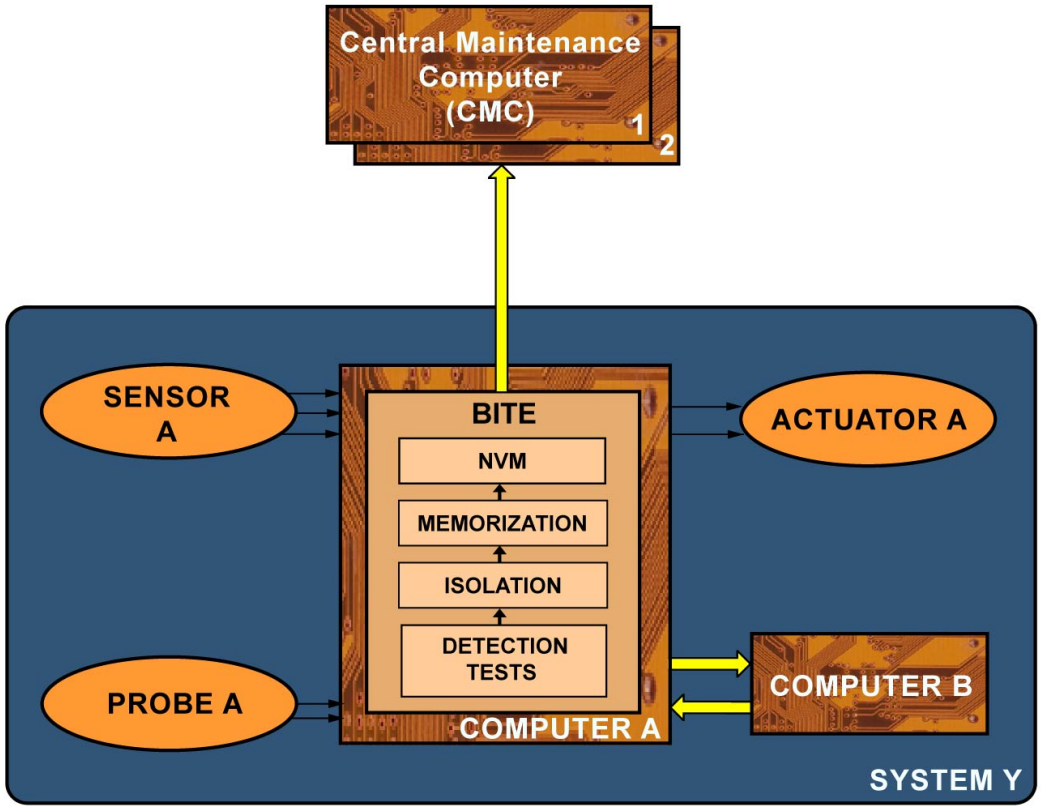

BITE PHILOSOPHY

CMS GENERAL DESCRIPTION (3)

TESTS

The test function, performed by the BITE, can be divided in 4 groups: - power-up tests, which are safety tests. They check the system integrity. They are carried out on the ground after a power cut. The typical tasks of a power-up test are: test of the microprocessor, of the memories, of ARINC 429 links, input/output circuits and configuration test.
- cyclic tests, which are executed in flight and do not disturb system operation. It is a permanent monitoring of the system. The typical tasks are: watchdog test, RAM test.
- system tests, which enable the maintenance staff to check that the systems are safe for flight and enable troubleshooting. They are carried out on the ground.
- specific tests, which are available for some systems. They generate stimuli to various command devices such as actuators or valves. They can have major effects on the A/C, like automatic moving of slats or flaps, and engine dry cranking. System tests and specific tests are initiated manually via the CMCs.

G7508471 - G3NT1T0 - FM45DE000000001

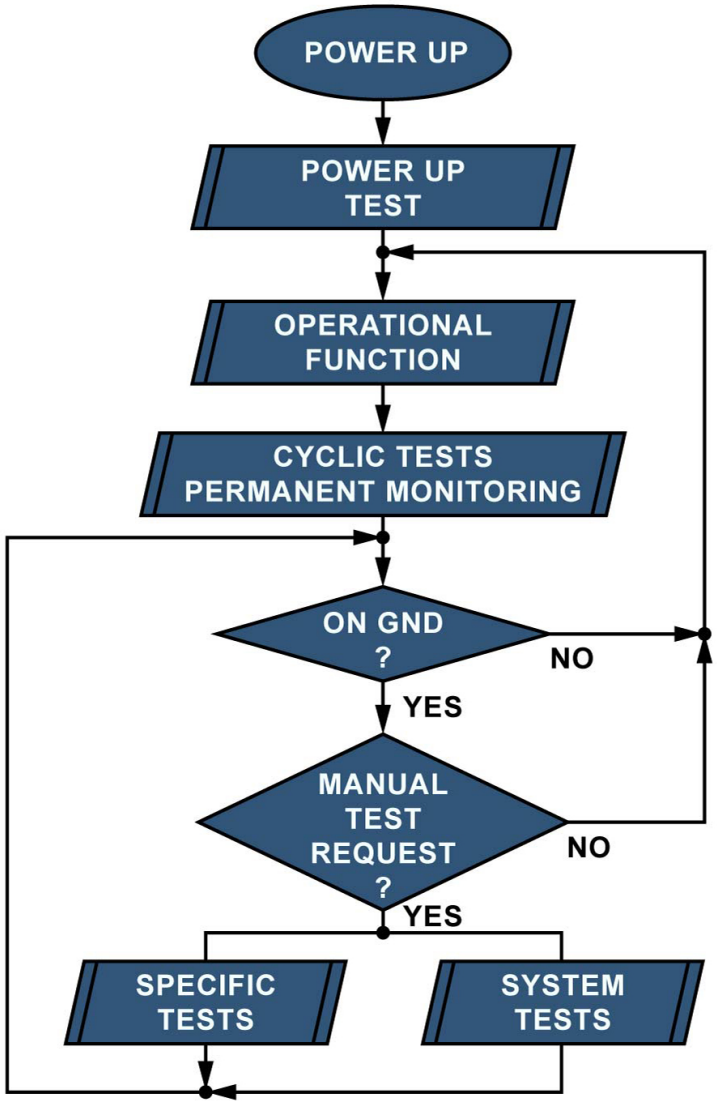

TESTS

G7508471 - G3NT1T0 - FM45DE000000001

CMS GENERAL DESCRIPTION (3)

CENTRAL MAINTENANCE COMPUTER

Two CMCs are provided:
- number one is active,
- number two is in hot standby.

A P/BSW is provided for manual transfer from one to the other.
The CMCs continuously scan the buses from the A/C systems. During flight, if a failure message from a BITE occurs on a bus, the CMCs copy and store it. The CMCs also store warning messages generated by the FWCs. The CMS operator's interface is the MCDU. Only two of the three MCDUs available can be operated simultaneously.

G7508471 - G3NT1T0 - FM45DE000000001

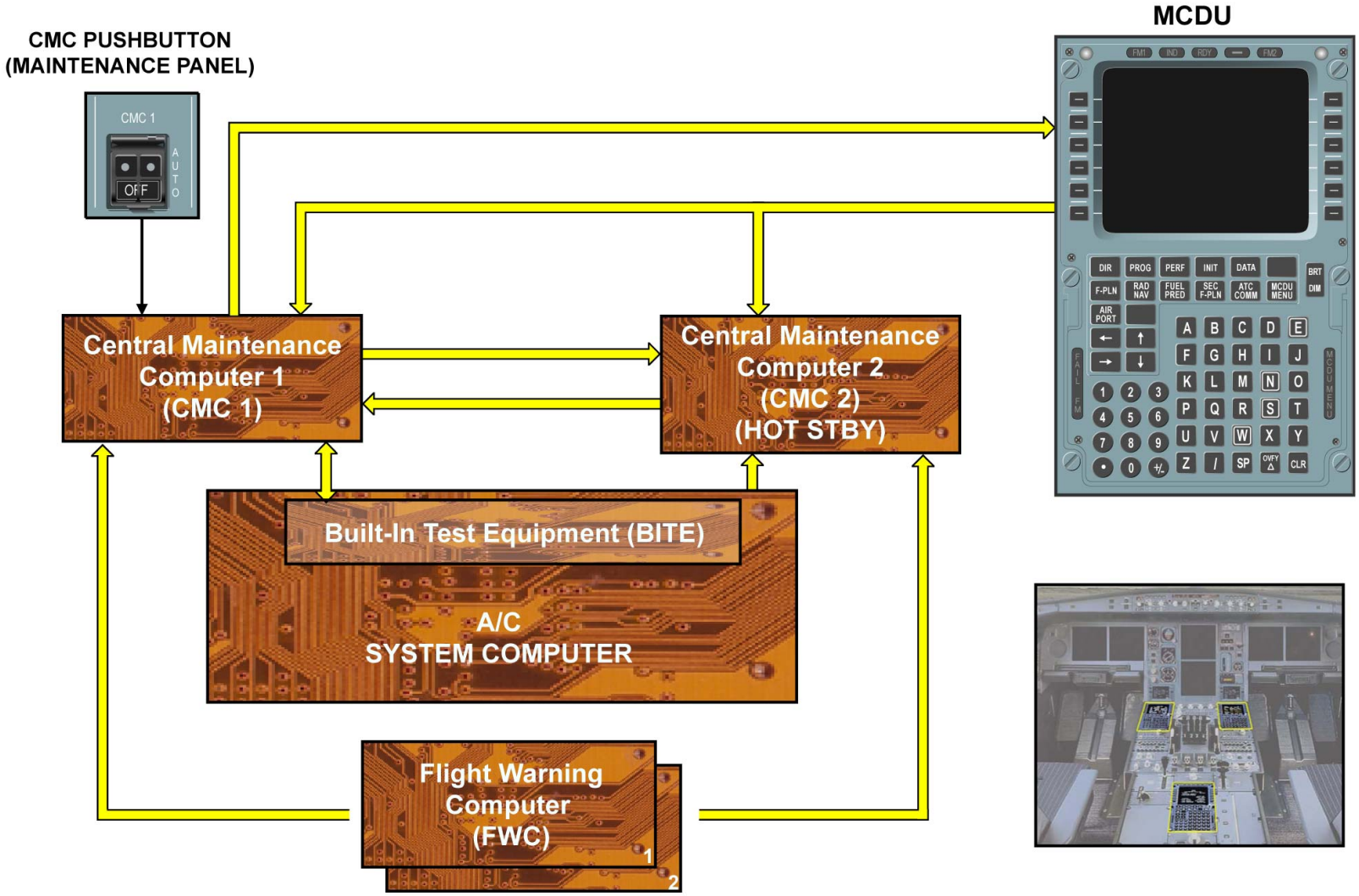

CENTRAL MAINTENANCE COMPUTER

G7508471 - G3NT1T0 - FM45DE000000001

CMS GENERAL DESCRIPTION (3)

OPERATION MODES

The CMS operates in two modes, a normal mode and an interactive mode. In normal mode, the CMS records fault messages from the system BITE and warnings from the FWCs. In interactive mode, which is available on the ground only, the CMS allows the operator to retrieve trouble-shooting data and to initiate tests.

G7508471 - G3NT1T0 - FM45DE000000001

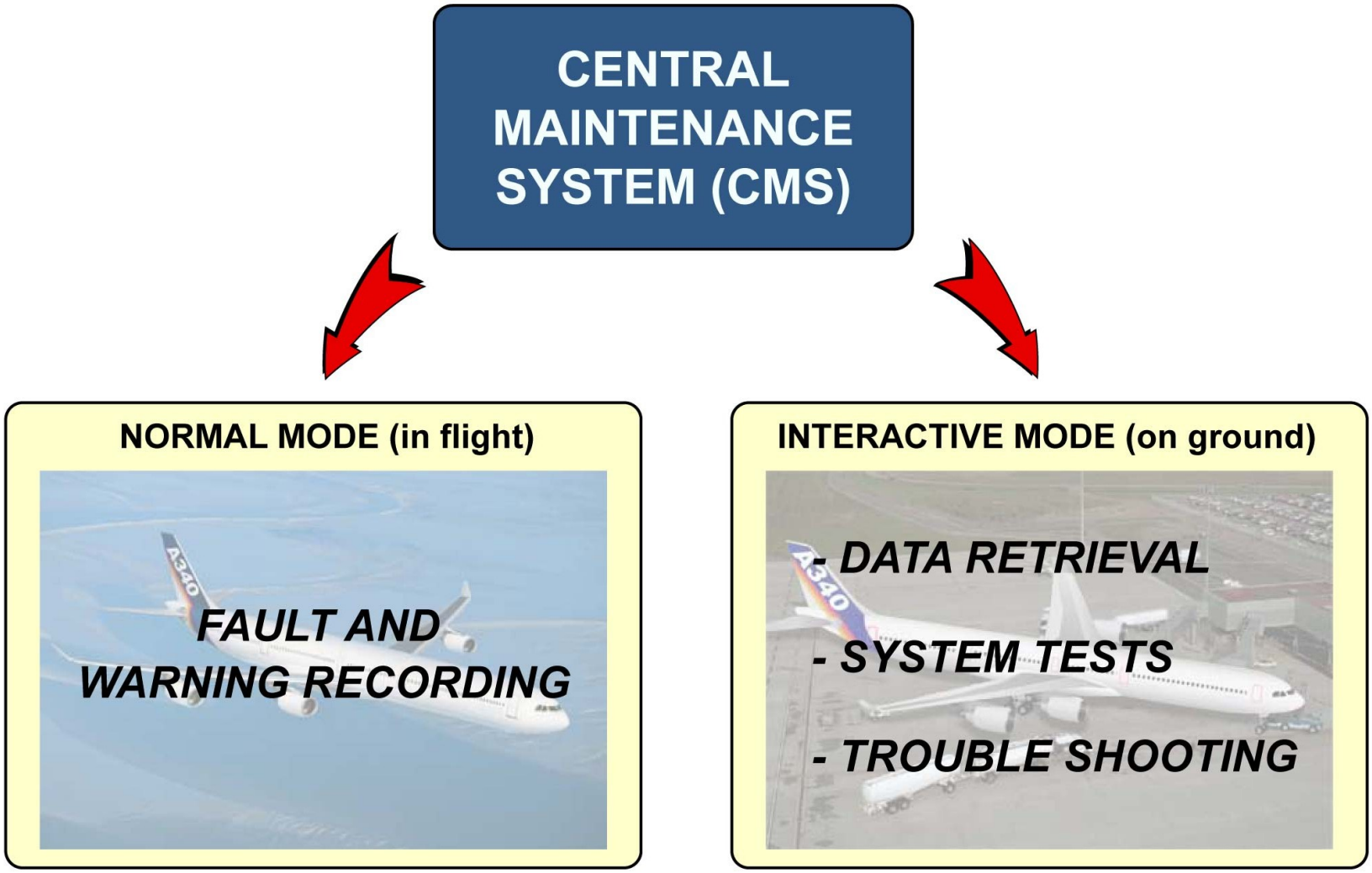

OPERATION MODES

G7508471 - G3NT1T0 - FM45DE000000001

CMS GENERAL DESCRIPTION (3)

SYSTEM TYPES

The systems are of three different types depending on their complexity. Most systems are type-1 systems. Type-1 systems can memorize failures that occurred during the last 64 flights. They are connected to both CMCs by an ARINC 429 output bus and from CMC 1 by an ARINC 429 input bus. This enables on-ground troubleshooting and interactive testing of the systems and their components.
The type-2 systems only memorize failures from the last flight. The output connection is an ARINC 429 bus. A discrete input allows initiation of the system test. The Type-3 systems do not generate failure messages. A discrete output indicates the system status. A discrete input allows initiation of the test or reset.

G7508471 - G3NT1T0 - FM45DE000000001

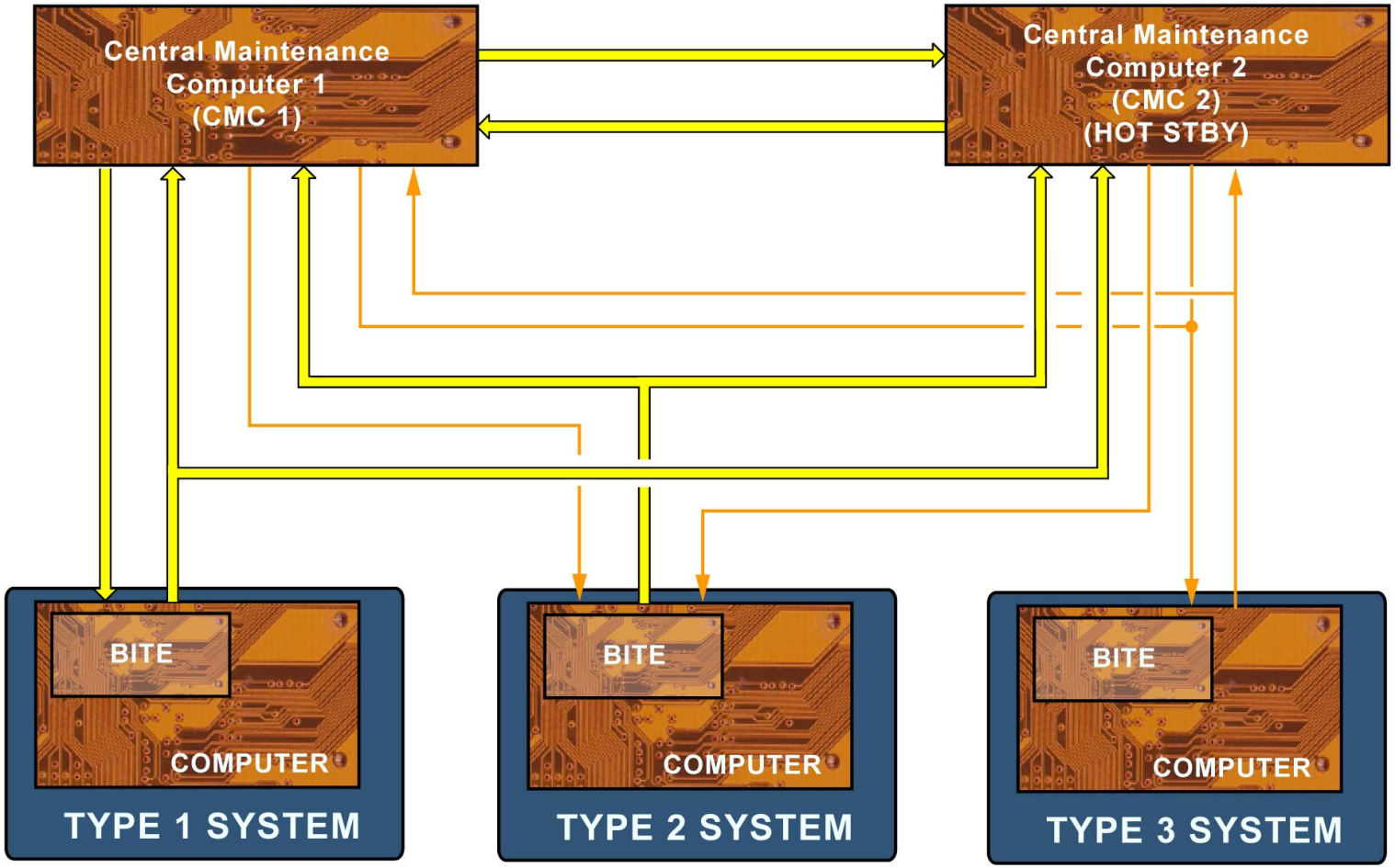

SYSTEM TYPES

G7508471 - G3NT1T0 - FM45DE000000001

CMS MESSAGE DESCRIPTION (3)

FAILURE CLASSES

Failures are divided into three classes depending on their operational and safety consequences on the A/C.

CLASS 1 FAILURES

Class 1 failures are the failures that have an operational consequence on the current flight. Some of them are displayed as a warning in real time on the ECAM and available on the MCDU.

CLASS 2 FAILURES

Class 2 failures are the failures that have no operational consequence on the current flight. Some affected systems are identified on the ECAM STATUS page. As for class 1 failures, the maintenance team can identify them on the post-flight report.

CLASS 3 FAILURES

Class 3 failures have neither operational nor safety consequences on the A/C. They are not indicated to the flight crew during flight.
They are only available on ground through the MCDU class 3 report.

G7508471 - G3NT1T0 - FM45DF000000001

FAILURE / FAULT CLASSES	CLASS 1	CLASS 2	CLASS 3
OPERATIONAL CONSEQUENCES ON THE CURRENT FLIGHT	✓	✗	✗
INDICATION TO THE FLIGHT CREW	✓ - WARNING OR CAUTION MESSAGES ON EWD - FLAG ON PFD,ND OR SD - LOCAL WARNING	✓ AVAILABLE ON THE ECAM STATUS PAGE STS FLASHING AT THE END OF THE FLIGHT	✗
DISPATCH CONSEQUENCES	REFER TO MMEL : "GO", "GO IF", "NO GO"	"GO" CORRECTION CAN BE DIFFERED FOR 500 HOURS.	"GO" MMEL NOT APPLICABLE HOWEVER CORRECTION IS RECOMMENDED TO IMPROVE THE DISPATCH RELIABILITY
INDICATION TO THE MAINTENANCE TEAM	✓ FAULT MESSAGE ON THE CMCs POST FLIGHT REPORT		✓ AVAILABLE THROUGH CMC CLASS 3 REPORT ON REQUEST

FAILURE CLASSES - CLASS 1 FAILURES ... CLASS 3 FAILURES

G7508471 - G3NT1T0 - FM45DF000000001

CMS MESSAGE DESCRIPTION (3)

INTERNAL / EXTERNAL FAILURES

Failure messages transmitted to the Central Maintenance Computers (CMCs) can be internal or external.

INTERNAL FAILURES

If a failure occurs within a system, the BITE will send an internal failure message to the CMCs.

EXTERNAL FAILURES

The BITE of each system interfacing with the affected system will send an external failure message to the CMCs.

G7508471 - G3NT1T0 - FM45DF000000001

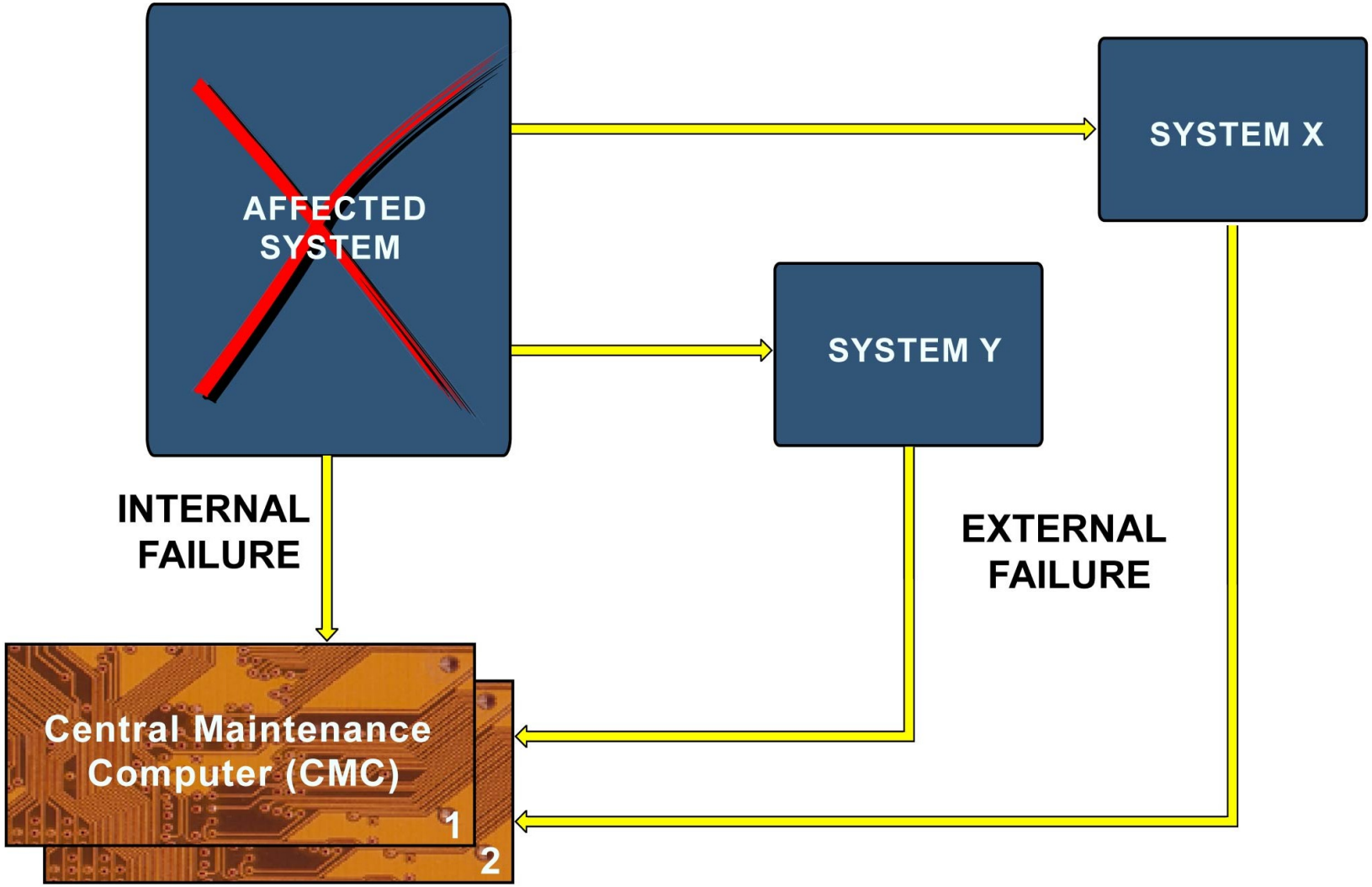

INTERNAL / EXTERNAL FAILURES - INTERNAL FAILURES & EXTERNAL FAILURES

G7508471 - G3NT1T0 - FM45DF000000001

CMS MESSAGE DESCRIPTION (3)

FAILURE MESSAGES STRUCTURE

The maintenance messages are generated and memorized by the system BITE and transmitted to the CMCs. These messages are all made up of one or several parts depending of the number of suspected Line Replaceable Units (LRUs) but only one suspected element is faulty. Each message is limited to a maximum of 48 characters in 2 lines of 24 characters. Each part of the maintenance message is composed in accordance with the syntax presented in the following figure.

G7508471 - G3NT1T0 - FM45DF000000001

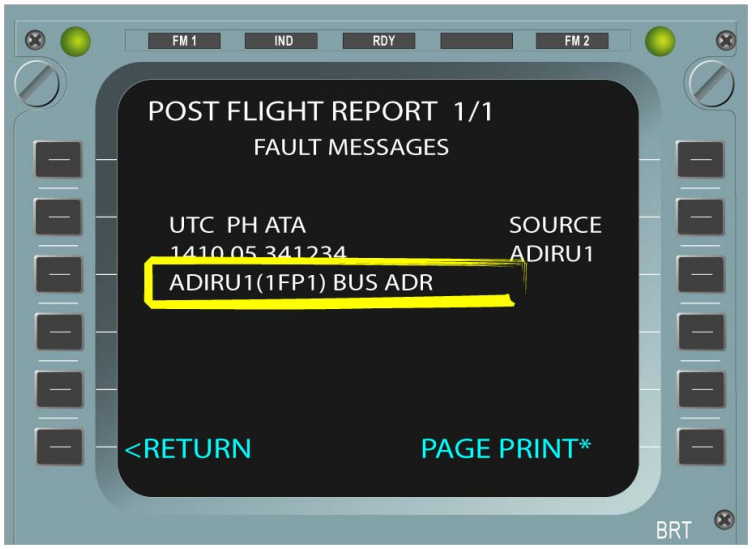

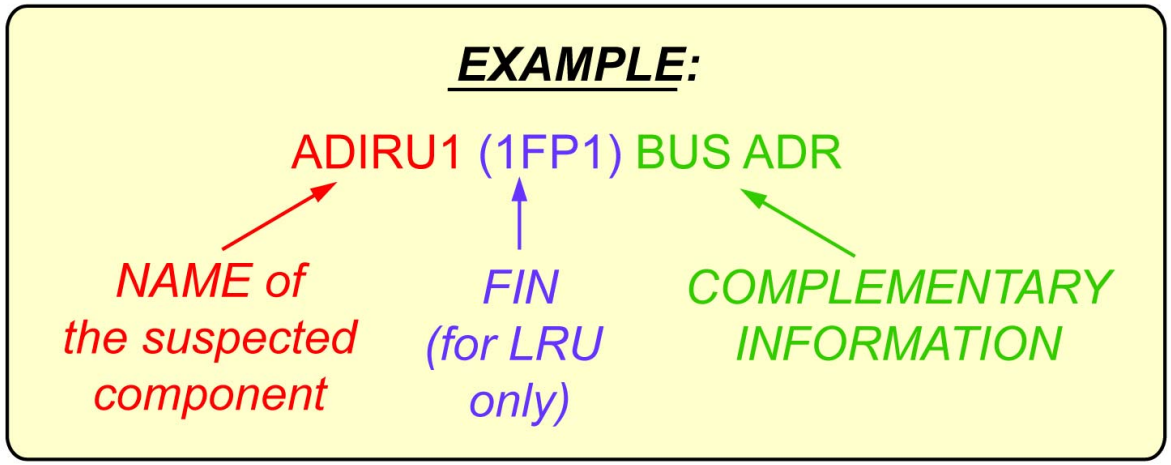

FAILURE MESSAGES STRUCTURE

G7508471 - G3NT1T0 - FM45DF000000001

CMS MESSAGE DESCRIPTION (3)

MESSAGES DESCRIPTION

Any part is given in one of these five forms depending on the failure reported.
An "LRU (FIN)" message appears when:
- either the computer declares itself suspect,
- or a computer or a system receiving its signals declares the affected computer as suspect.

An "LRU (FIN) COMPLEMENTARY INFO" message appears when the suspected computer is generating several signals. The complementary information helps to identify the suspected signal and may be controlled on the A/C (signal, bus or discrete name). A "WRG: SIGNAL NAME" message appears when a wiring failure is identified (conclusion of the BITE analysis), with the name of the transmitted signal.
An "LRU (FIN) SPLY" message appears when an LRU supply loss is identified without ambiguity (the LRU itself may be one of the causes).
Specific messages are used for some faulty situations that would require too complex a BITE to identify the affected LRU. In these cases, only the operator can identify the faulty LRU. The procedure required is in the Trouble Shooting Manual (TSM).

G7508471 - G3NT1T0 - FM45DF000000001

LRU (FIN)

SPECIFIC MESSAGES

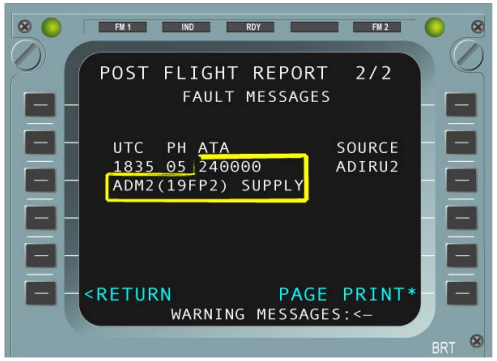

LRU (FIN) SPLY

LRU (FIN) COMPLEMENTARY INFO

WRG: SIGNAL NAME

MESSAGES DESCRIPTION

G7508471 - G3NT1T0 - FM45DF000000001

CMS MESSAGE DESCRIPTION (3)

AMBIGUOUS / MULTIPLE FAULTS MESSAGE CONSTRUCTION

In the case of ambiguous faults, up to three possible failures may be indicated in the most probable order. Each possibility being separated by a "/" sign, only one component is effectively responsible. In some cases of multiple faults, a BITE may generate a single maintenance message that concerns several defective components. A "+" sign separates the faulty components. The ATA reference next to the message corresponds to the first suspected component. When the FIN part of the message is absent, this means that no LRU is directly involved in this part. Each Central Maintenance System (CMS) message is covered by the TSM and is an entry point to trouble shooting.

G7508471 - G3NT1T0 - FM45DF000000001

AMBIGUOUS FAULTS

LRU1 (FIN) / LRU2 (FIN)

POSSIBILITY 1 (MOST PROBABLE) / POSSIBILITY 2 (LESS PROBABLE)

MULTIPLE FAULTS

LRU1 (FIN) + LRU1 (FIN)

FAULT 1 + FAULT 2

AMBIGUOUS / MULTIPLE FAULTS MESSAGE CONSTRUCTION

G7508471 - G3NT1T0 - FM45DF000000001

CMS MENUS DESCRIPTION (2)

CMS MCDU FLT/GND MENUS

All the CMS functions are managed through the MCDUs. The functions are displayed on a ground menu and on a flight menu. The flight menu presents only a part of the ground menu. The Central Maintenance System (CMS) menu switches to flight mode, when at least 3 engines (one engine for A330) are running for 180 seconds with the flight number inserted (or the aircraft speed is above 80 knots). The ground menu comes back during roll-out, when the aircraft speed is below 80 knots for more than 180 seconds.

G7508471 - G3NT1T0 - FM45DG000000001

*1ST ENGINE START FOR A330

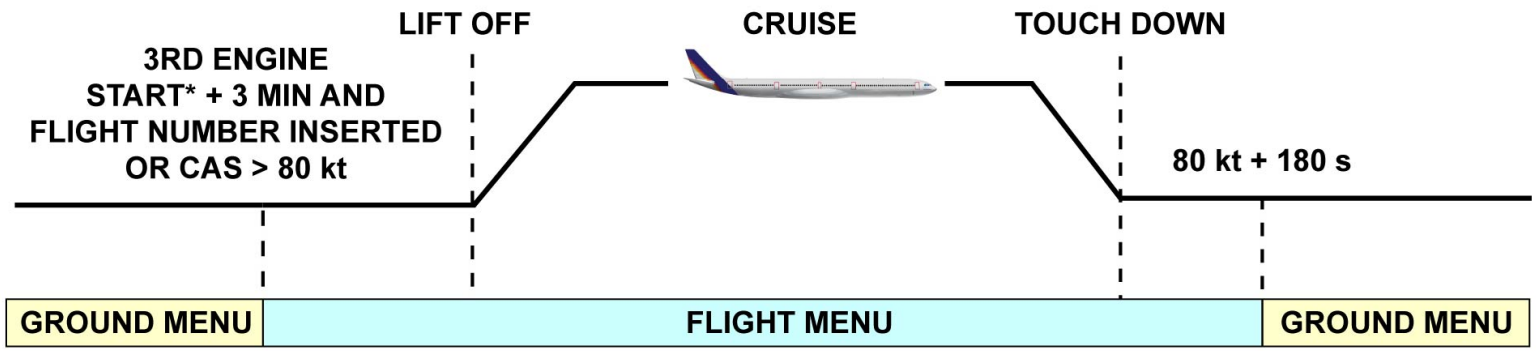

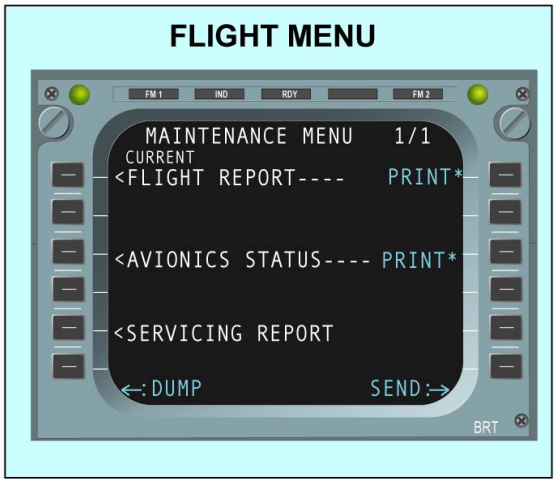

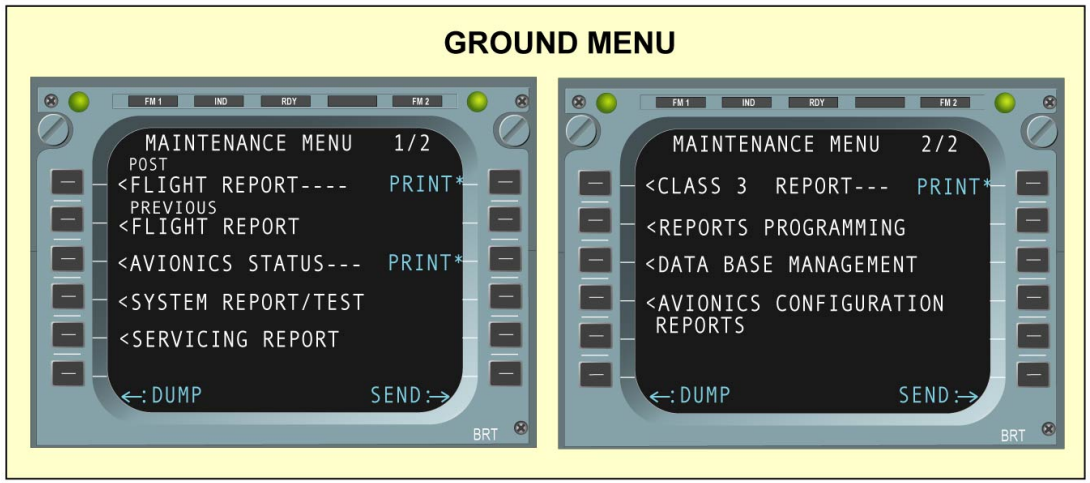

CMS MCDU FLT/GND MENUS

G7508471 - G3NT1T0 - FM45DG00000001

CMS MENUS DESCRIPTION (2)

NORMAL MODE

In normal mode, the Central Maintenance Computers (CMCs) memorize the fault messages from type 1 and type 2 systems and the fault status from type 3 systems. The three types of system have a different behavior depending on flight phases in the normal mode:
- type 1 systems receive CMC data for flight phase synchronization. They memorize failure messages at the start of each flight LEG until 80 knots +180s after touch down.
- type 2 systems only memorize failure messages when the aircraft is airborne (i.e. as soon as the landing gear is not compressed).
- type 3 systems transmit a permanent signal if they are faulty. In the normal mode, several functions provide aircraft status reports. The CURRENT FLIGHT REPORT function is available on the flight menu. It provides the list of Electronic Centralized Aircraft Monitoring (ECAM) warnings/cautions and faults related to class 1 and class 2 failures recorded during the current flight.
The POST FLIGHT REPORT function is available on the first page of the ground menu. It provides the list of ECAM warnings/cautions and faults related to class 1 and class 2 failures recorded during the last flight.
The PREVIOUS FLIGHT REPORT function is available on the first page of the ground menu. It gives the list of the POST FLIGHT REPORTS over the last 63 previous flights.

G7508471 - G3NT1T0 - FM45DG000000001

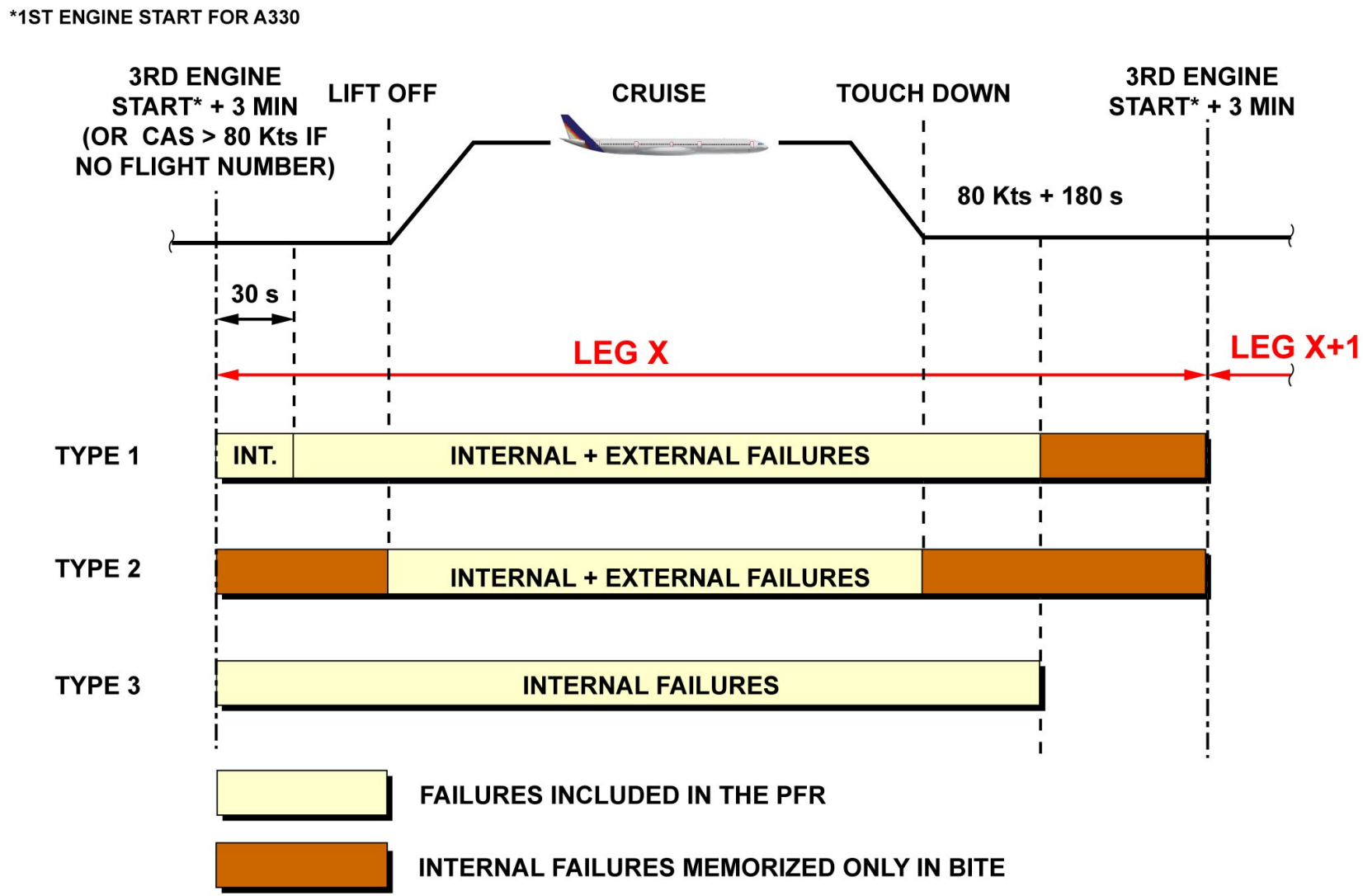

NORMAL MODE

G7508471 - G3NT1T0 - FM45DG000000001

CMS MENUS DESCRIPTION (2)

INTERACTIVE MODE

The SYSTEM REPORT/TEST function of the ground menu enables access to the interactive mode. In the interactive mode, which is available on the ground only, the CMS allows the operator to retrieve troubleshooting data and to initiate system tests.

COMPLEMENTARY FUNCTIONS

Several complementary functions are available via the MCDU menus. The AVIONICS STATUS function is accessible on both flight and ground menus. It provides a real time list of the systems affected by a fault. The CLASS 3 REPORT function is available on the second page of the ground menu. It provides the list of class 3 faults. The REPORTS PROGRAMMING function allows the automatic print, download or transmission of the PFR, SERVICING REPORT and CONFIG CHANGE REPORT, the activation of the FLIGHT REPORT FILTER.
The DATA BASE MANAGEMENT function allows the print or the transmission of maintenance filter data base, the avionics configuration database and the servicing report coupons. The AVIONICS CONFIGURATION REPORTS function manages the inventory of the aircraft computer part numbers and software diskettes. The SERVICING REPORT function provides reports with different parameters that have to be periodically checked and that may induce servicing actions. The UTC/DATE INIT function is accessible on both flight and ground menus. It appears after a long power interruption of the CMCs. It enables initialization of the backup clock in case of main clock failure.

G7508471 - G3NT1T0 - FM45DG000000001

*1ST ENGINE START FOR A330

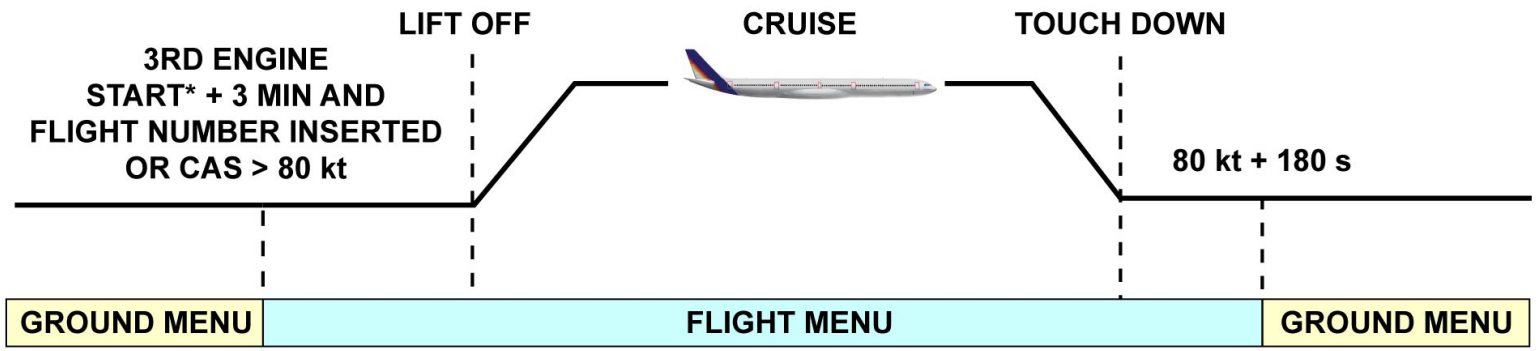

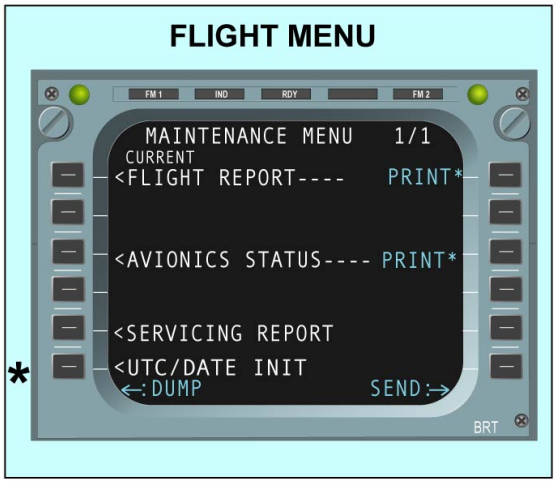

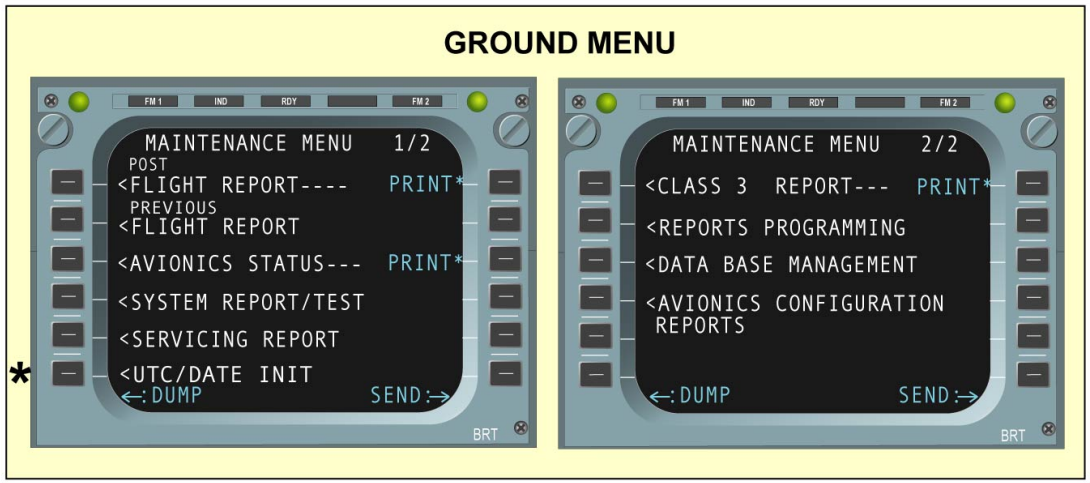

* <UTC/DATE INIT is only displayed after a long power interruption

INTERACTIVE MODE & COMPLEMENTARY FUNCTIONS

G7508471 - G3NT1T0 - FM45DG00000001

CMS OPERATION IN NORMAL MODE (2)

GENERAL

This is the MCDU menu page which presents the systems connected to the MCDU.
The Central Maintenance System (CMS) key allows access to the MAINTENANCE MENU. With the arrow key, all the normal mode CMS reports, can be shown.
These reports will be explained in the following topics, supposing the A/C on ground and engines shut down.

G7508471 - G3NT1T0 - FM45D1F45C60302

MCDU (100VU)

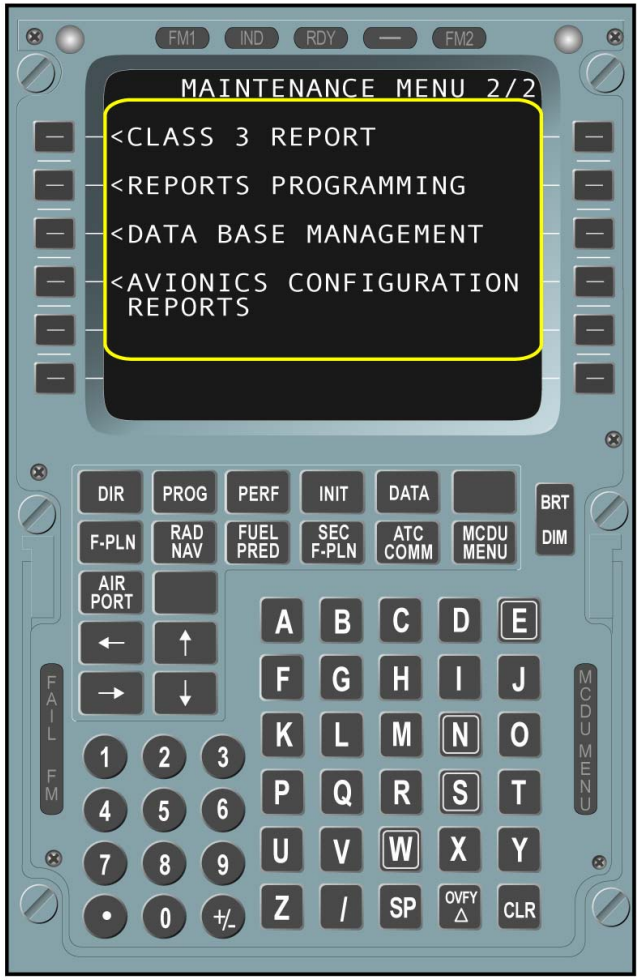

MCDU (100VU)

GENERAL

G7508471 - G3NT1T0 - FM45D1F45C60302

CMS OPERATION IN NORMAL MODE (2)

POST FLIGHT REPORT

The POST FLIGHT REPORT displays the ECAM messages such as WARNINGS/CAUTIONS and MAINTENANCE STATUS messages, and also CLASS 1 and 2 FAULT messages which occurred during the last flight and have been memorized in the Central Maintenance Computer (CMC). It can display a maximum of 64 warnings and 64 faults.
The first item of the POST FLIGHT REPORT are the ECAM messages. The first page contains only one of these messages. If there are several messages, they will be displayed 2 at a time only, on the following pages. In this example, there are 2 ECAM message pages.
The ECAM messages are displayed in the order of acquisition by the CMC, minute by minute. The last message memorized is displayed first. If there is no warning, the NO WARNING message will be displayed.
From each "warning messages" item page, we can access the first "fault messages" item page by pressing the right arrow key. The first page contains only one message. If there are several messages, they will be displayed 2 at a time only, on the following pages. In this example there are 2 fault message pages. The number of ECAM message item pages and FAULT message item pages is not necessarily the same.
The fault messages are displayed in the order of acquisition by the CMC, minute by minute. The last message memorized is displayed first. If there are no failures, the NO FAULT message will be displayed.
From each fault message item page, it is possible to go back to the first warning message item page by pressing the left arrow key.
In our example, the prompt (<) before the second fault message means that this fault is also detected by other systems as external failures. These systems are called IDENTIFIERS. The IDENTIFIERS page lists the fault message and the name of the systems, other than the source, which detected the fault. A maximum of 6 systems can be displayed.
This screen shows a summary of the main pages of the MCDU described in the topic.

G7508471 - G3NT1T0 - FM45D1F45C60302

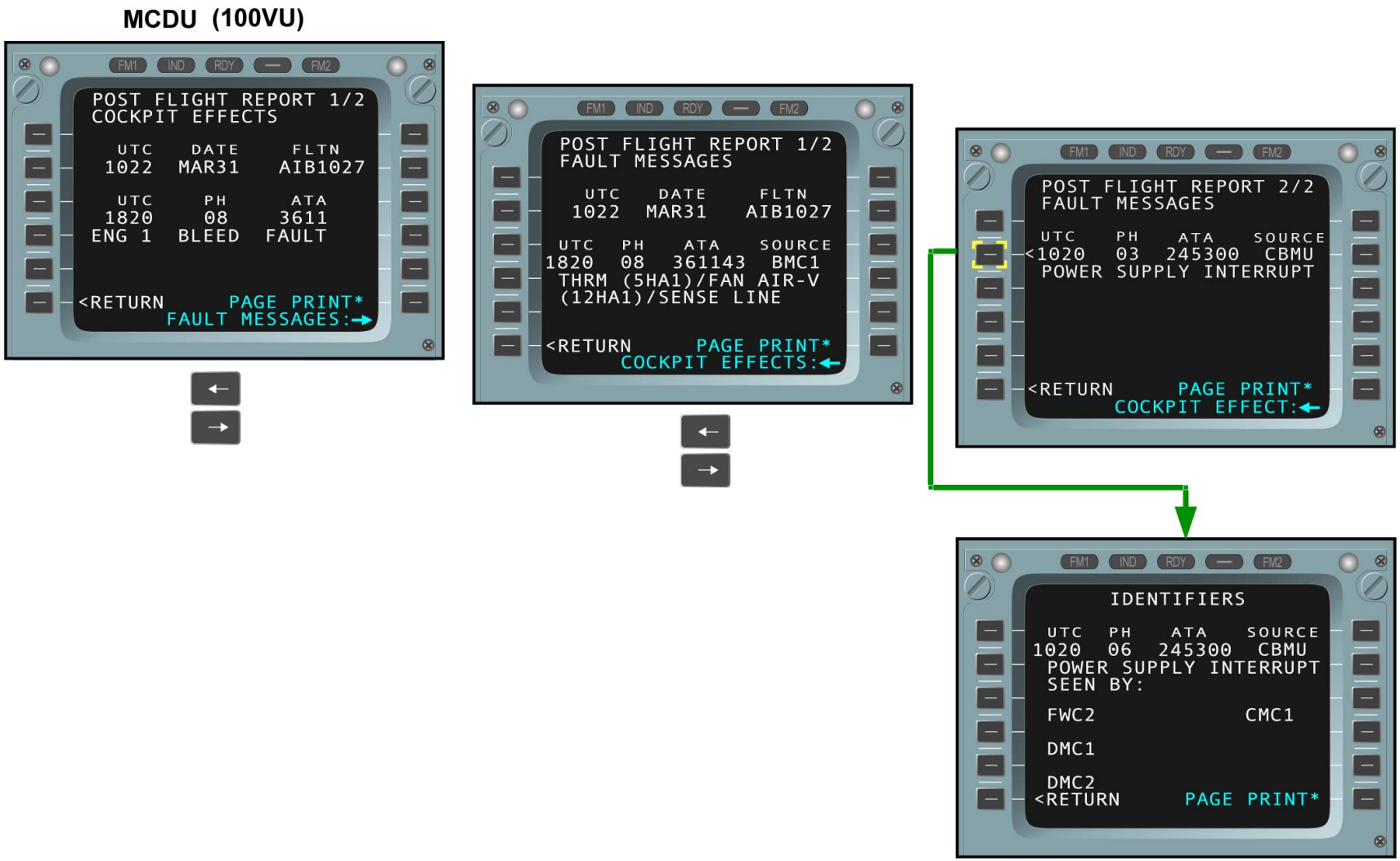

POST FLIGHT REPORT

G7508471 - G3NT1T0 - FM45D1F45C60302

CMS OPERATION IN NORMAL MODE (2)

POST FLIGHT REPORT PRINT

All the information presented on the POST FLIGHT REPORT on different MCDU screens is printed together on one page. Extra information is added in this POST FLIGHT REPORT print-out. In flight, this report is called the CURRENT FLIGHT REPORT. It can be printed at any time.
The ECAM and FAULT messages concerning the same event and recorded in the same minute are printed side by side.
The header presents general information about the flight and the report print-out.
The cockpit effects list presents the ECAM messages. If a warning is generated during a flight phase inhibit, it will not be presented to the crew. On the post flight report cockpit effects, the warning will be presented and "NOT DISPLAYED" added to the message.
The time of warning or fault message occurrence and the name of the flight phase are displayed.
The FAULTS list presents intermittent failures and permanent failures called hard failures with their source and their identifiers.

G7508471 - G3NT1T0 - FM45D1F45C60302

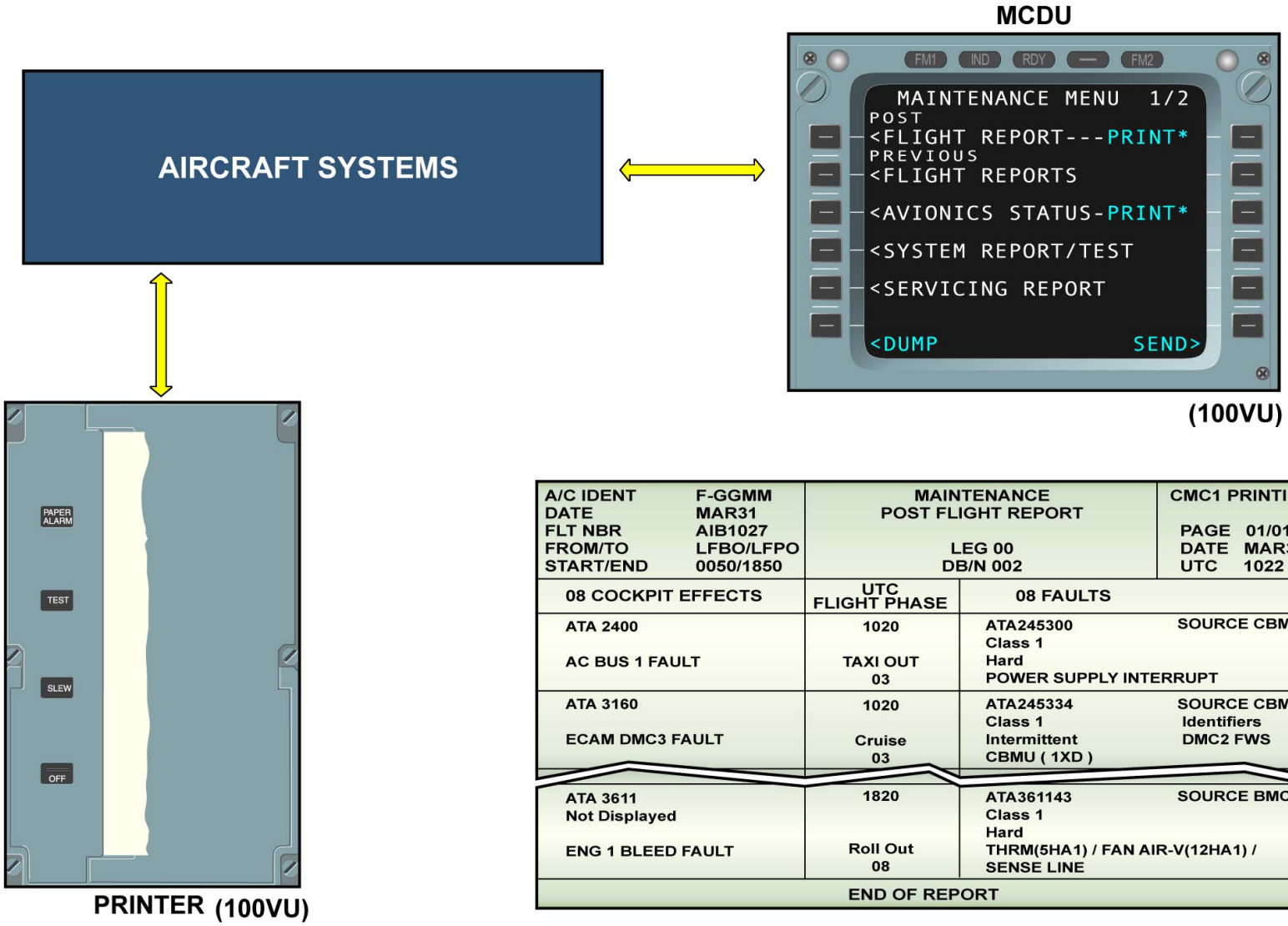

A/C IDENT F-GGMM DATE MAR31 FLT NBR AIB1027 FROM/TO LFBO/LFPO START/END 0050/1850	MAINTENANCE POST FLIGHT REPORT LEG 00 DB/N 002		CMC1 PRINTING PAGE 01/01 DATE MAR31 UTC 1022
08 COCKPIT EFFECTS	UTC FLIGHT PHASE	08 FAULTS	
ATA 2400 AC BUS 1 FAULT	1020 TAXI OUT 03	ATA245300 Class 1 Hard POWER SUPPLY INTERRUPT	SOURCE CBMU
ATA 3160 ECAM DMC3 FAULT	1020 Cruise 03	ATA245334 Class 1 Intermittent CBMU (1XD)	SOURCE CBMU Identifiers DMC2 FWS
ATA 3611 Not Displayed ENG 1 BLEED FAULT	1820 Roll Out 08	ATA361143 Class 1 Hard THRM(5HA1) / FAN AIR-V(12HA1) / SENSE LINE	SOURCE BMC1
END OF REPORT			

POST FLIGHT REPORT PRINT

G7508471 - G3NT1T0 - FM45D1F45C60302

CMS OPERATION IN NORMAL MODE (2)

PREVIOUS FLIGHT REPORTS

The PREVIOUS FLIGHT REPORTS item gives access to the PREVious FLIGHT REPORTS affected by failures, with a maximum of 63 previous flights. It will display a maximum of 256 warning and fault messages.
This report presents the list of the previous flights, 4 per page, and allows access to the corresponding PREVious FLIGHT REPORTS. The flights are presented in reverse order on the MCDU screen. To study the details of these reports, please refer to the POST FLIGHT REPORT topic.
In case of CMC removal/installation, if the new CMC comes from another A/C, the PREVious FLIGHT REPORTS concerning this A/C will not be displayed.
If the new CMC comes from the shop, a pseudo flight (00) is created to indicate the date of the first computer installation on the aircraft.

AVIONICS STATUS

In flight or on ground, the AVIONICS STATUS report displays the identity of systems affected by at least one CLASS 1 or 2 internal or external failure at the moment of request. The entire report can be printed. This is the list of systems affected by a failure. If no systems are affected, the NO FAULT message is displayed.
On ground, a prompt (<) indicates that a direct access to interactive mode of the selected system is possible. If the SYSTEM REPORT/TEST mode is selected on one of the other MCDUs, the "DUAL SYSTEM ACCESS" message is displayed on the scratchpad line.
This screen shows a summary of the main pages of the MCDU described in the topic.

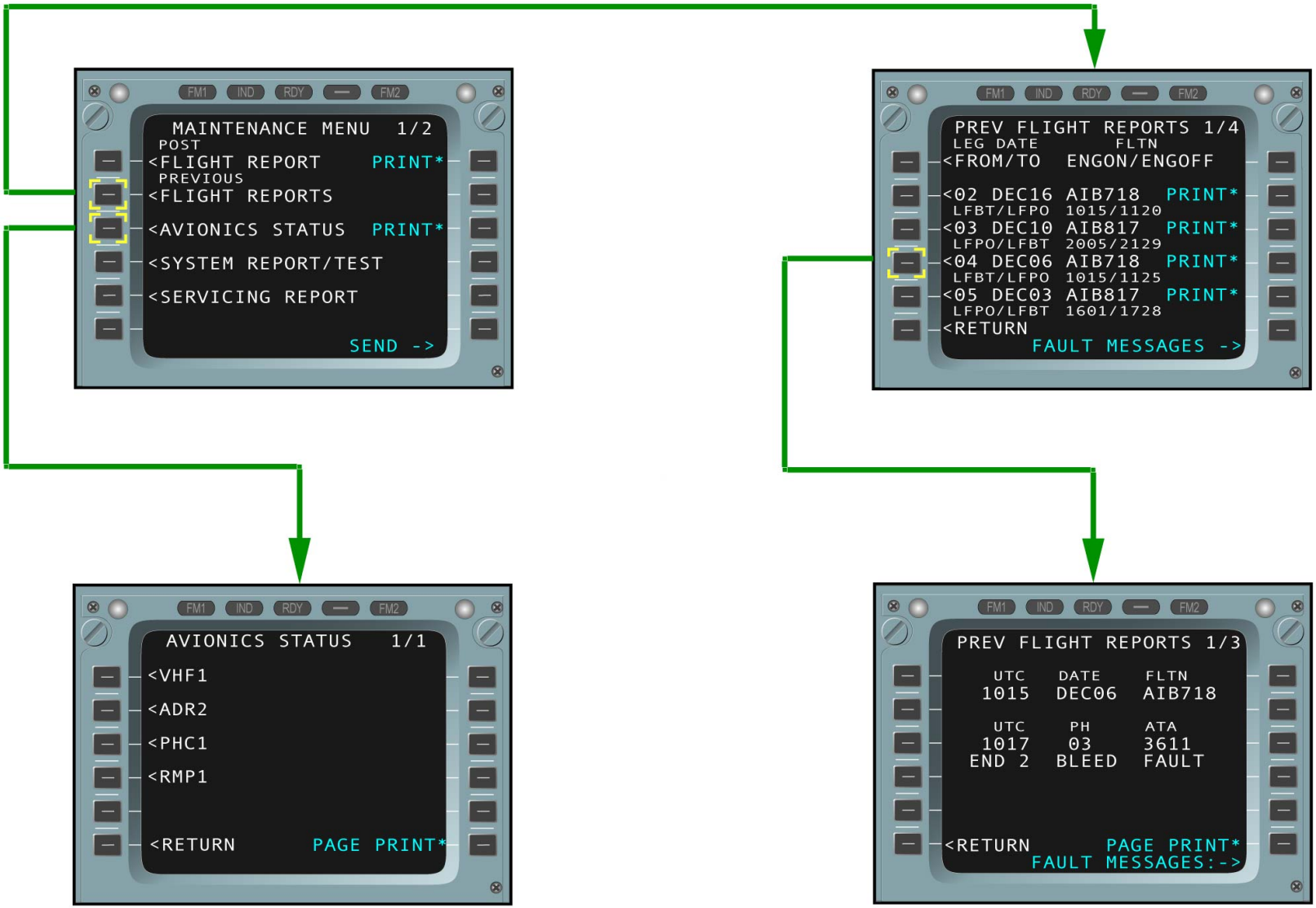

PREVIOUS FLIGHT REPORTS & AVIONICS STATUS

G7508471 - G3NT1T0 - FM45D1F45C60302

CMS OPERATION IN NORMAL MODE (2)

SERVICING REPORTS

The SERVICING REPORT function provides, in flight or on ground, reports of different parameters which have to be periodically checked and which may induce servicing actions. The SERVICING REPORT is accessible through the MCDU, it can be also printed or dumped (MDDU) or transmitted to the ground (ATSU).

G7508471 - G3NT1T0 - FM45D1F45C60302

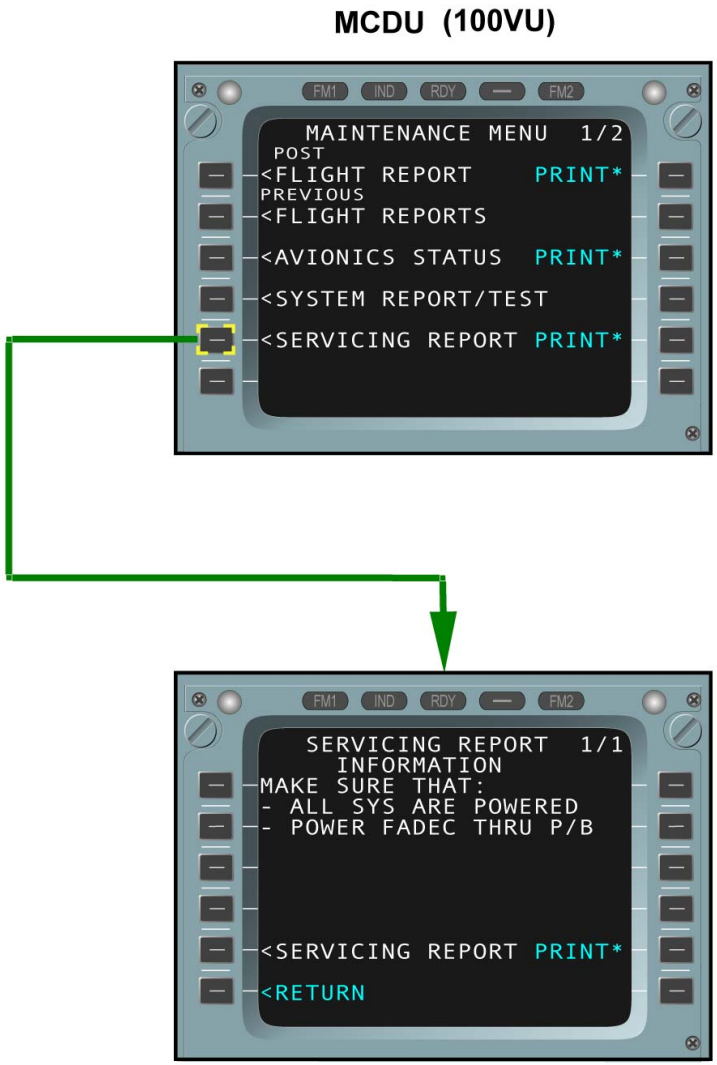

SERVICING REPORTS

G7508471 - G3NT1T0 - FM45D1F45C60302

CMS OPERATION IN NORMAL MODE (2)

CLASS 3 REPORT

This report displays the list of systems affected by class 3 faults and the failures by system on request. This report is created, on ground only, by the CMC upon selection.
A page tells the operator to check that all systems are in normal configuration and enables the CLASS 3 REPORT to be printed. The affected systems list is shown on the MCDU.
Select the corresponding adjacent line key, to see the list of the class 3 failures sent to the CMC by a computer.
If there are no failures, the NO FAULT message will be displayed.
In the complete CLASS 3 REPORT print out, class 3 failures and affected systems are printed side by side. The header presents general information about the A/C identification and the report printout. A list presents the systems affected by at least one CLASS 3 fault. A list presents the associated CLASS 3 fault messages.

G7508471 - G3NT1T0 - FM45D1F45C60302

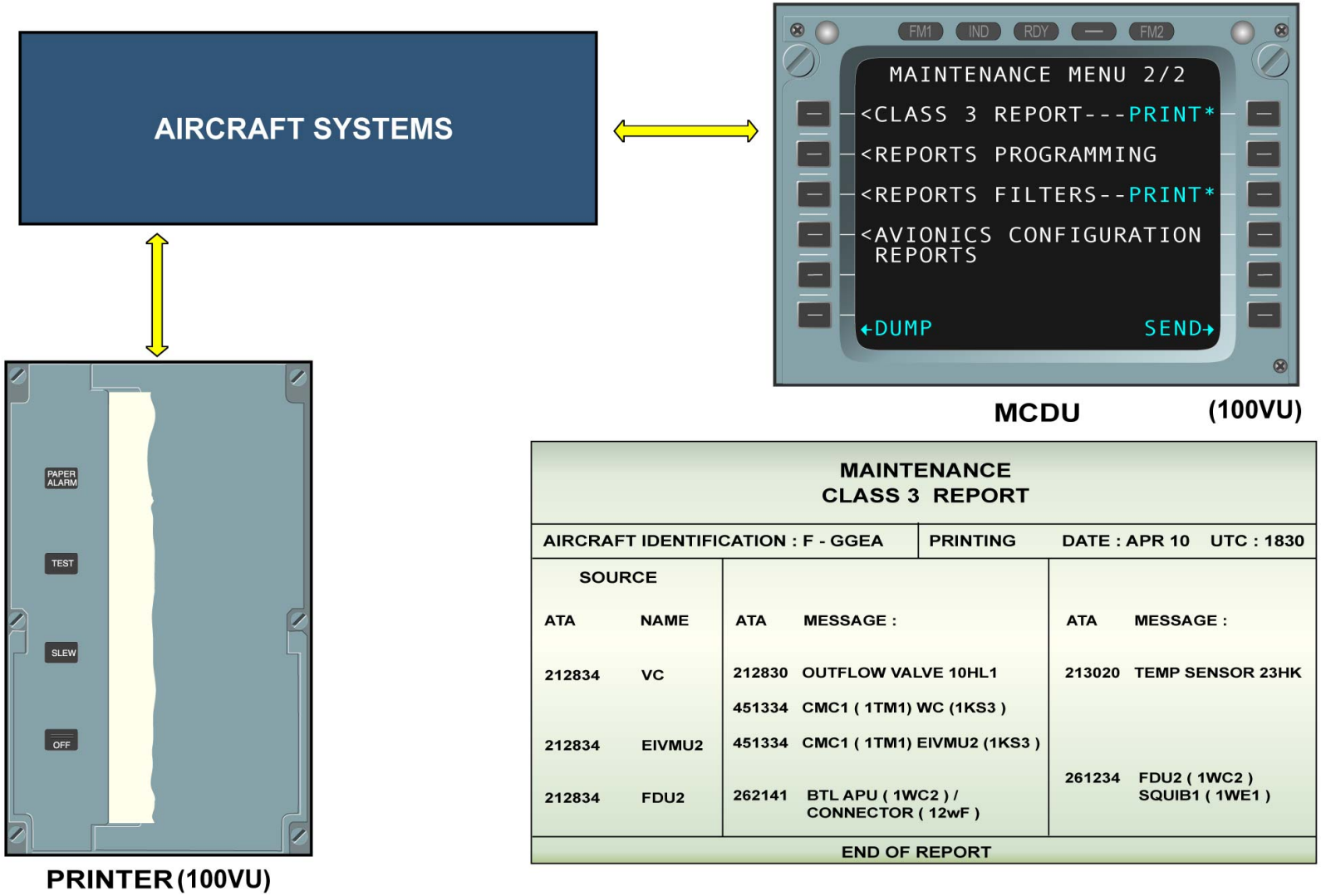

MAINTENANCE
CLASS 3 REPORT

AIRCRAFT IDENTIFICATION : F - GGEA		PRINTING	DATE : APR 10 UTC : 1830		
SOURCE					
ATA	NAME	ATA	MESSAGE :	ATA	MESSAGE :
212834	VC	212830	OUTFLOW VALVE 10HL1	213020	TEMP SENSOR 23HK
		451334	CMC1 (1TM1) WC (1KS3)		
212834	EIVMU2	451334	CMC1 (1TM1) EIVMU2 (1KS3)		
212834	FDU2	262141	BTL APU (1WC2) / CONNECTOR (12wF)	261234	FDU2 (1WC2) SQUIB1 (1WE1)

END OF REPORT

CLASS 3 REPORT

G7508471 - G3NT1T0 - FM45D1F45C60302

CMS OPERATION IN NORMAL MODE (2)

REPORTS PROGRAMMING

Filtering and reports programming functions are available via the second page of the maintenance menu.
The purpose of this function is to program (YES or NO), via the MCDU, the:
- automatic transmission of PFR, SERVICING REPORT, CONFIG CHANGE REPORT (print, send or dump),
- activation of the FLIGHT REPORT FILTER,
- triggering and processing of SERVICING REPORT.

The report filter allows the spurious messages filtering in the PFR. The filter can be programmed at engineering level.

G7508471 - G3NT1T0 - FM45D1F45C60302

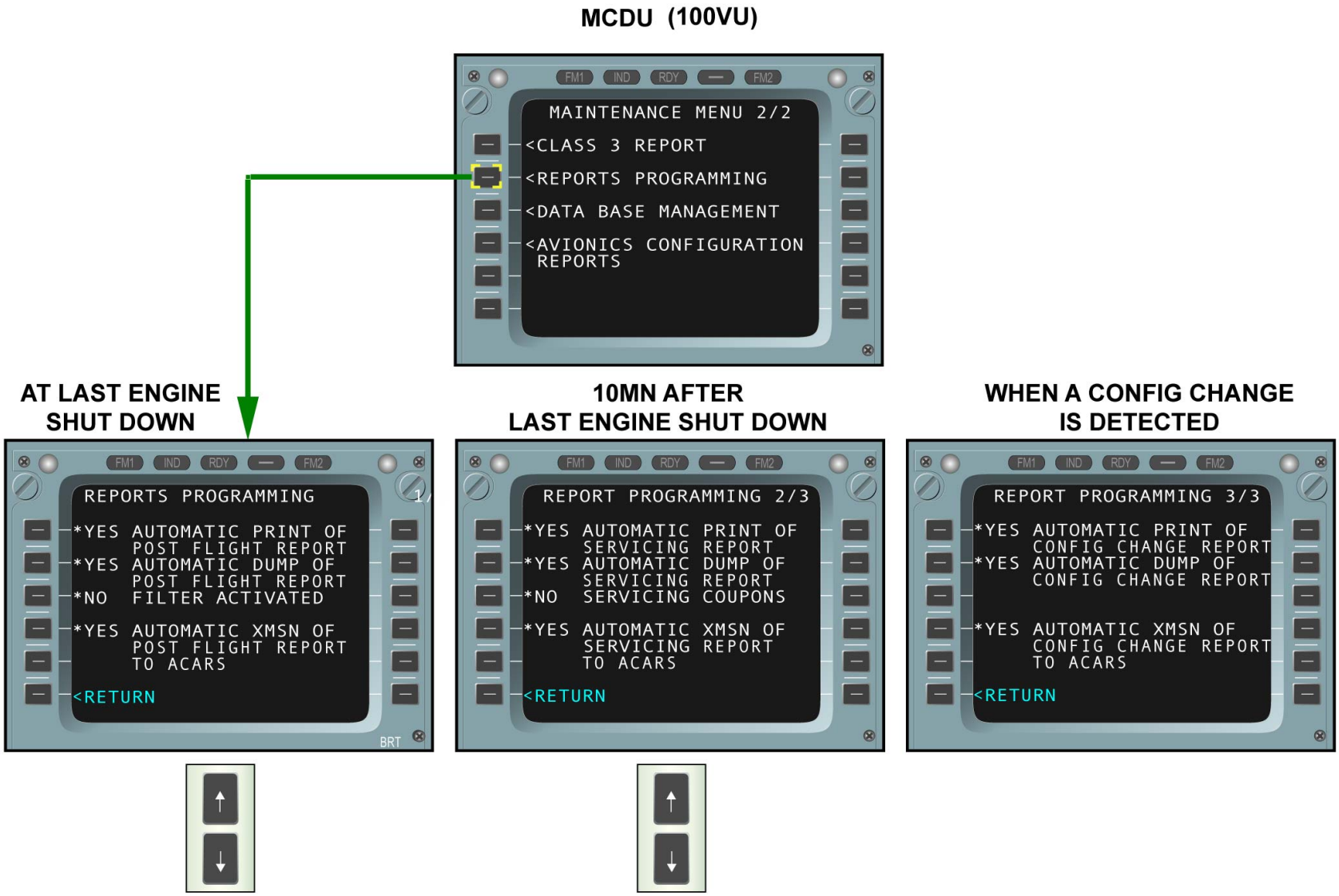

REPORTS PROGRAMMING

CMS OPERATION IN NORMAL MODE (2)

DATA BASE MANAGEMENT

The purpose of this function is to:
- print the contents of the maintenance filter data base,
- transmit the maintenance filter data base to the opposite CMC,
- transmit the avionics configuration data base to the opposite CMC (when CMC1 is master),
- print the contents of the servicing reports and avionics configuration data base.

G7508471 - G3NT1T0 - FM45D1F45C60302

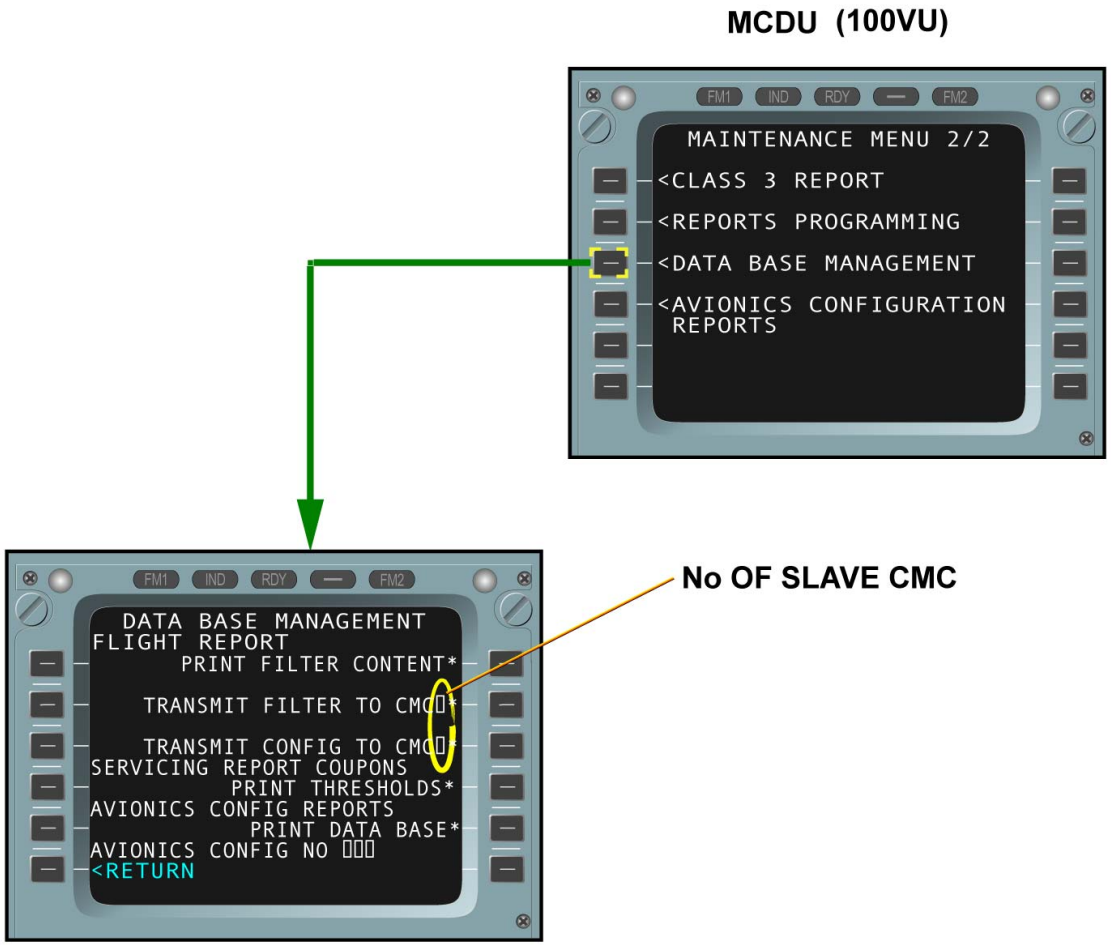

DATA BASE MANAGEMENT

CMS OPERATION IN NORMAL MODE (2)

AVIONICS CONFIGURATION REPORTS

The purpose of this function is to present, on ground only, a compilation of configuration information (LRU IDENTIFICATION in each system BITE menu). This item is available only with the CMC1.

G7508471 - G3NT1T0 - FM45D1F45C60302

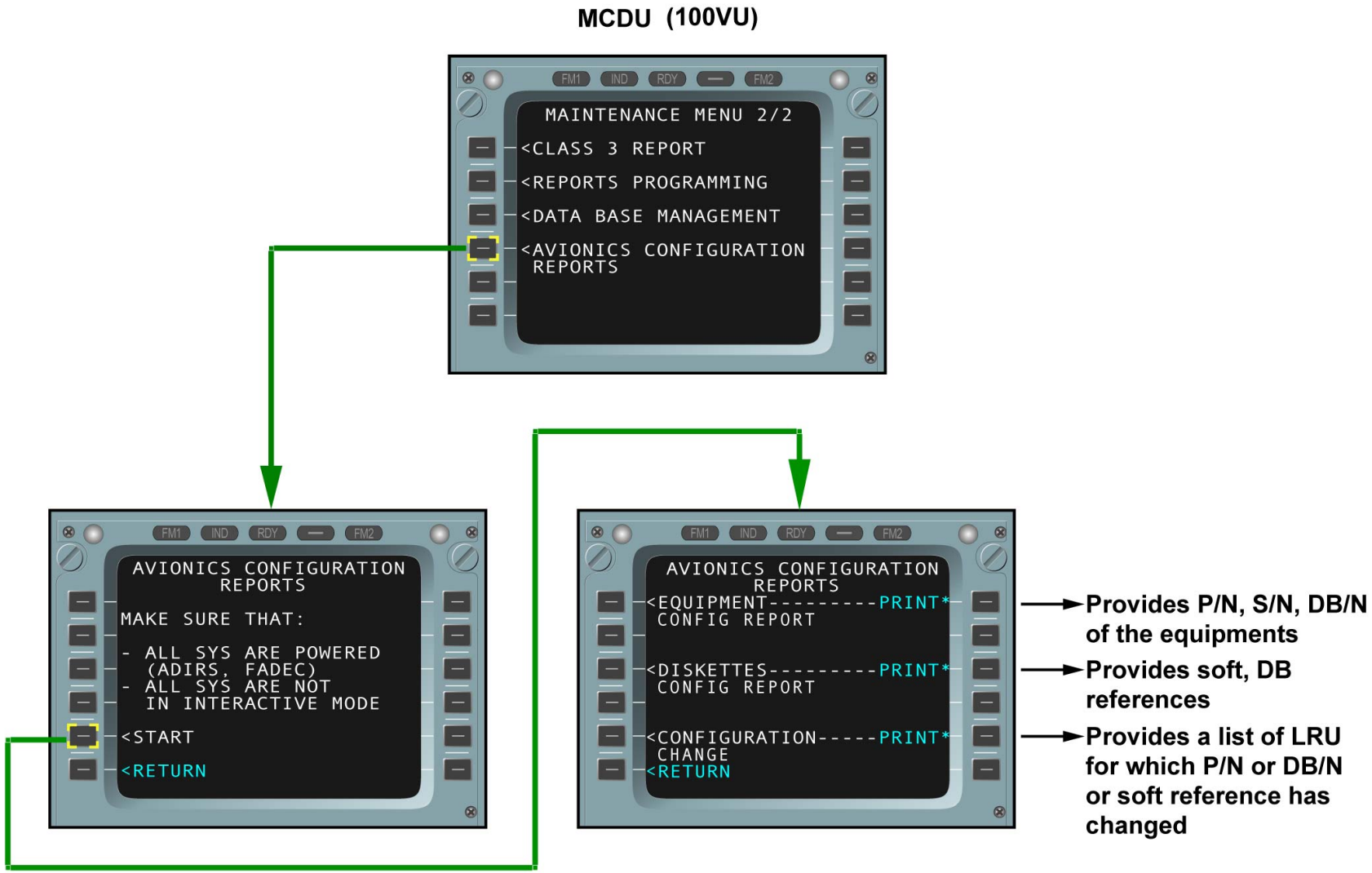

AVIONICS CONFIGURATION REPORTS

CMS OPERATION IN INTERACTIVE MODE (2)

GENERAL

This module is developed on the basis that the A/C is on ground and engines shut down. From the first page of the MCDU maintenance menu, access to the interactive mode through the system report/test function is gained. This function ensures the dialog between the MCDUs and each system, type 1, 2, or 3, connected to the Central Maintenance Computers (CMCs), on ground only.
The page displayed by the CMC gives the list of all the systems sorted by function in the ATA chapter sequence. This list is displayed on 6 pages, which are shown in the following figures. Each function allows access to the related computers or units dealing with that function.

G7508471 - G3NT1T0 - FM45D2F45C70602

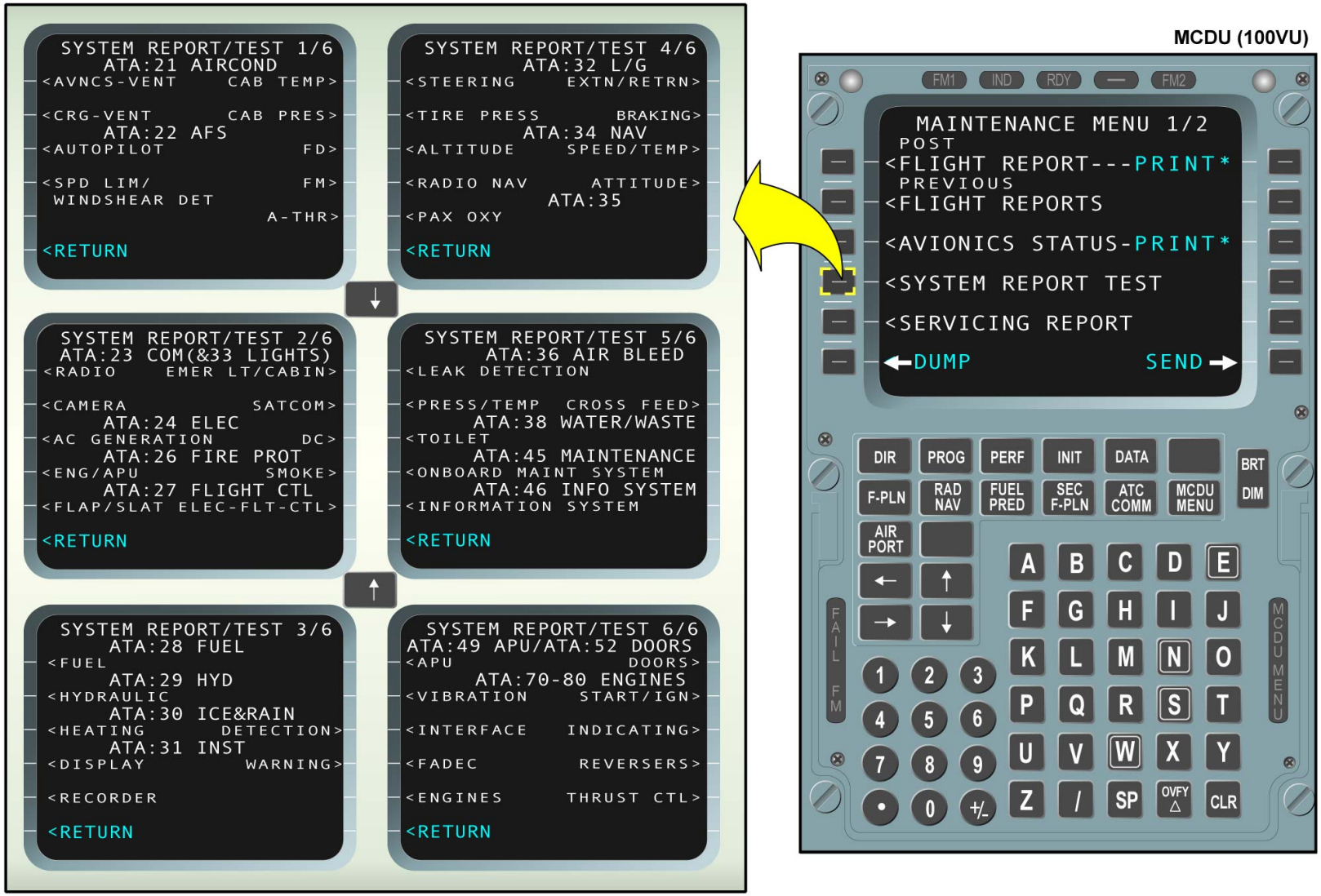
SYSTEM REPORT/TEST 1/6
ATA:21 AIRCOND
<AVNCS-VENT CAB TEMP>
<CRG-VENT CAB PRES>
ATA:22 AFS
<AUTOPILOT FD>
<SPD LIM/ FM>
WINDSHEAR DET
A-THR>
<RETURN
SYSTEM REPORT/TEST 2/6
ATA:23 COM(&33 LIGHTS)
<RADIO EMER LT/CABIN>
<CAMERA SATCOM>
ATA:24 ELEC
<AC GENERATION DC>
ATA:26 FIRE PROT
<ENG/APU SMOKE>
ATA:27 FLIGHT CTL
<FLAP/SLAT ELEC-FLT-CTL>
<RETURN
SYSTEM REPORT/TEST 3/6
ATA:28 FUEL
<FUEL
ATA:29 HYD
<HYDRAULIC
ATA:30 ICE&RAIN
<HEATING DETECTION>
ATA:31 INST
<DISPLAY WARNING>
<RECORDER
<RETURN
SYSTEM REPORT/TEST 4/6
ATA:32 L/G
<STEERING EXTN/RETRN>
<TIRE PRESS BRAKING>
ATA:34 NAV
<ALTITUDE SPEED/TEMP>
<RADIO NAV ATTITUDE>
ATA:35
<PAX OXY
<RETURN
SYSTEM REPORT/TEST 5/6
ATA:36 AIR BLEED
<LEAK DETECTION
<PRESS/TEMP CROSS FEED>
ATA:38 WATER/WASTE
<TOILET
ATA:45 MAINTENANCE
<ONBOARD MAINT SYSTEM
ATA:46 INFO SYSTEM
<INFORMATION SYSTEM
<RETURN
SYSTEM REPORT/TEST 6/6
ATA:49 APU/ATA:52 DOORS
<APU DOORS>
ATA:70-80 ENGINES
<VIBRATION START/IGN>
<INTERFACE INDICATING>
<FADEC REVERSERS>
<ENGINES THRUST CTL>
<RETURN
MCDU (100VU)
FM1 IND RDY FM2
MAINTENANCE MENU 1/2
POST
<FLIGHT REPORT---PRINT*
PREVIOUS
<FLIGHT REPORTS
<AVIONICS STATUS-PRINT*
<SYSTEM REPORT TEST
<SERVICING REPORT
DUMP
SEND
DIR PROG PERF INIT DATA
BRT DIM
F-PLN RAD NAV FUEL PRED SEC F-PLN ATC COMM MCDU MENU
AIR PORT
FAIL FM
MCDU MENU
SP OVFY CLR

GENERAL

CMS OPERATION IN INTERACTIVE MODE (2)

TYPE 1 SYSTEM TYPICAL MENU

This is a typical type 1 system menu. However, most of the radio navigation, navigation and communication systems, which are interchangeable with other A/C, may have a different menu presentation. The following items shown in the table are always available.

LAST LEG REPORT

The purpose of this item is to present the internal and external class 1 and 2 fault messages, concerning the system, that appeared during the last flight.

PREVIOUS LEGS REPORT

The purpose of this item is to present the internal and external fault messages, concerning the system that appeared during the previous 63 flights. This item is the sum of the LAST LEG REPORT items over several flights.

LRU IDENT

The purpose of this item is to present the part number of the selected system. The serial number(S/N), the database number (DB/N) and the software number (SW/N) can also be indicated for certain systems.

GROUND SCANNING

The purpose of this item is to reconfigure the computer BITE as being in flight. Fault messages class 1or 2, internal and external fault messages, detected by the BITE during the activation of this function, are displayed in real time on the MCDU and are not memorized.

TROUBLE SHOOTING DATA

The purpose of this item is to present internal snapshot data concerning any failure of any class for airline engineering use. In most cases, it is coded data and sometimes can be accessed from other reports such as LAST LEG REPORT, PREVIOUS LEGS REPORT, TEST and GROUND REPORT.

CLASS 3 FAULTS

The purpose of this item is to present the class 3 fault messages, concerning the system, that appeared during the last flight.

TEST

The purpose of this item is to initiate tests from the MCDU and display the test results with their failure class. If the test takes more than 1 second, TEST IN PROGRESS xxS and the maximun waiting time are displayed. If several types of test exist for a system, they must be displayed in line 2R, 3R, 4R or even on a sub-menu page accessible from line key 6R.
Tests are divided into 3 groups :
- basic or system tests, which have no effect on the A/C, are accessible via key 2R,
- complementary tests, which affect the A/C and require safety precautions, are accessible via key 3R,
- additional tests, which are menu-guided tests, are accessible via key 4R.

GROUND REPORT

The purpose of this item is to present the internal fault messages which appeared when the A/C was on ground (Not in the PFR).

SPECIFIC DATA

The purpose of this item is to display specific information in order to help the trouble shooting. If only one type of specific data exists in the system, the exact name will be displayed in place of SPECIFIC DATA. If more than 2 types of SPECIFIC DATA exist in a system, they must be displayed on a sub-menu page accessible from line key 6R.

G7508471 - G3NT1T0 - FM45D2F45C70602

MCDU (100VU)

ITEMS AVAILABLE
LAST LEG REPORT
PREVIOUS LEGS REPORTS
LRU IDENTIFICATION
GROUND SCANNING
TROUBLE SHOOTING DATA
CLASS 3 FAULTS
TEST
GROUND REPORT
SPECIFIC DATA

TYPE 1 SYSTEM TYPICAL MENU - LAST LEG REPORT ... SPECIFIC DATA

CMS OPERATION IN INTERACTIVE MODE (2)

TYPE 1 SYSTEM EXAMPLE MENU

To describe the contents of the different items of a type 1 system, we have chosen the Electric Power Generation System (EPGS), part of the AC ELECTRICAL GENERATION function. The Ground and Auxiliary Power Control Unit (GAPCU) is the interface unit between the EPGS and the CMCs, but as the EPGS is controlled by 5 computers (1 GAPCU and 4 GCUs), an intermediate page is added to choose the computer from which we have selected the report.
The EPGS menu, which contains most of the type 1 system items, is shown on the figure and will be explained in the following subtopics.

LAST LEG REPORT

This report presents only 2 messages at a time. The fault messages are recorded by the system with the Universal Time Coordinated (UTC) at which the fault occurred, the 6-digit ATA reference and the class of failure, which give access to the Trouble Shooting Data. When no failure has been recorded during the last flight, the NO FAULT DETECTED message is displayed on the MCDU.

PREVIOUS LEGS REPORT

Like the LAST LEG REPORT, this report presents only two messages at a time. The fault messages are identical to the LAST LEG REPORT plus the date at which the failure occurred and the leg number. In addition, the identification of the A/C where the failure occurred is included in the header.

LRU IDENT

This report presents: the name, the part number and, in this example, the serial number of the electronic Line Replaceable Units (LRUs) which are included in the EPGS. Only 2 are displayed at a time.

TROUBLE SHOOTING DATA

This report presents snapshot coded information. The information presented is A/C configuration and system configuration. If no failure has been recorded by the system, the NO FAULT DETECTED message is displayed on the MCDU.

CLASS 3 FAULT

This report presents only 2 messages at a time. The class 3 faults are recorded during the last flight. Only the time and the ATA reference are presented.

SYSTEM TEST

This item, which is a system test, enables initialization of the power-up test, among other things. All faults detected and presented by the system will be analyzed and reported by this test. If the test is OK, "TEST OK" is displayed on the MCDU.

GROUND REPORT

The characteristics of this report are the same as those of the LAST LEG REPORT but limited to the internal failures of any class. The following screens are a summary of the main screens shown in this topic.

G7508471 - G3NT1T0 - FM45D2F45C70602

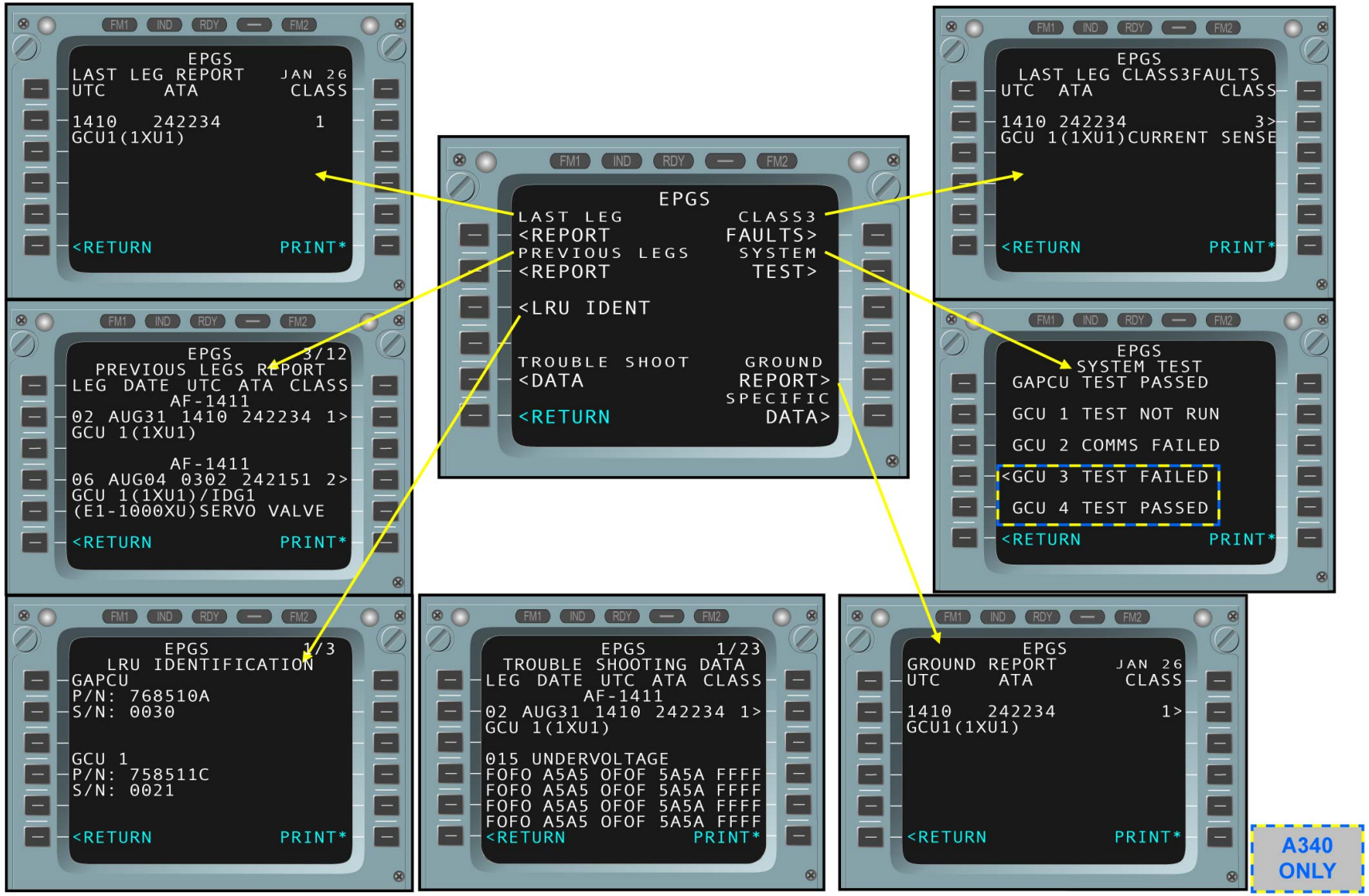

TYPE 1 SYSTEM EXAMPLE MENU - LAST LEG REPORT ... GROUND REPORT

G7508471 - G3NT1T0 - FM45D2F45C70602

CMS OPERATION IN INTERACTIVE MODE (2)

TYPE 2 SYSTEM TYPICAL MENU

Unlike the Type 1 Systems, there is no Menu Mode for the Type 2 Systems. These functions are presented on the MCDU by the CMC (pseudo mode menu). The following items shown in the table are always available.

LAST LEG/GND REPORT

The purpose of this item is to present the class 1 and 2 fault messages, concerning the system, that appeared during the last flight and on ground.

LRU IDENT

The purpose of this item is to present the part number of all LRU's of the selected system.

CLASS 3 FAULTS

The purpose of this item is to present the class 3 fault messages concerning the system during the last flight.

TEST

The purpose of this item is to initiate the system test from the MCDU and to display the test result with its failure class. If the test takes more than 1 second, the CMC displays TEST IN PROGRESS xxS with the maximum waiting time.

G7508471 - G3NT1T0 - FM45D2F45C70602

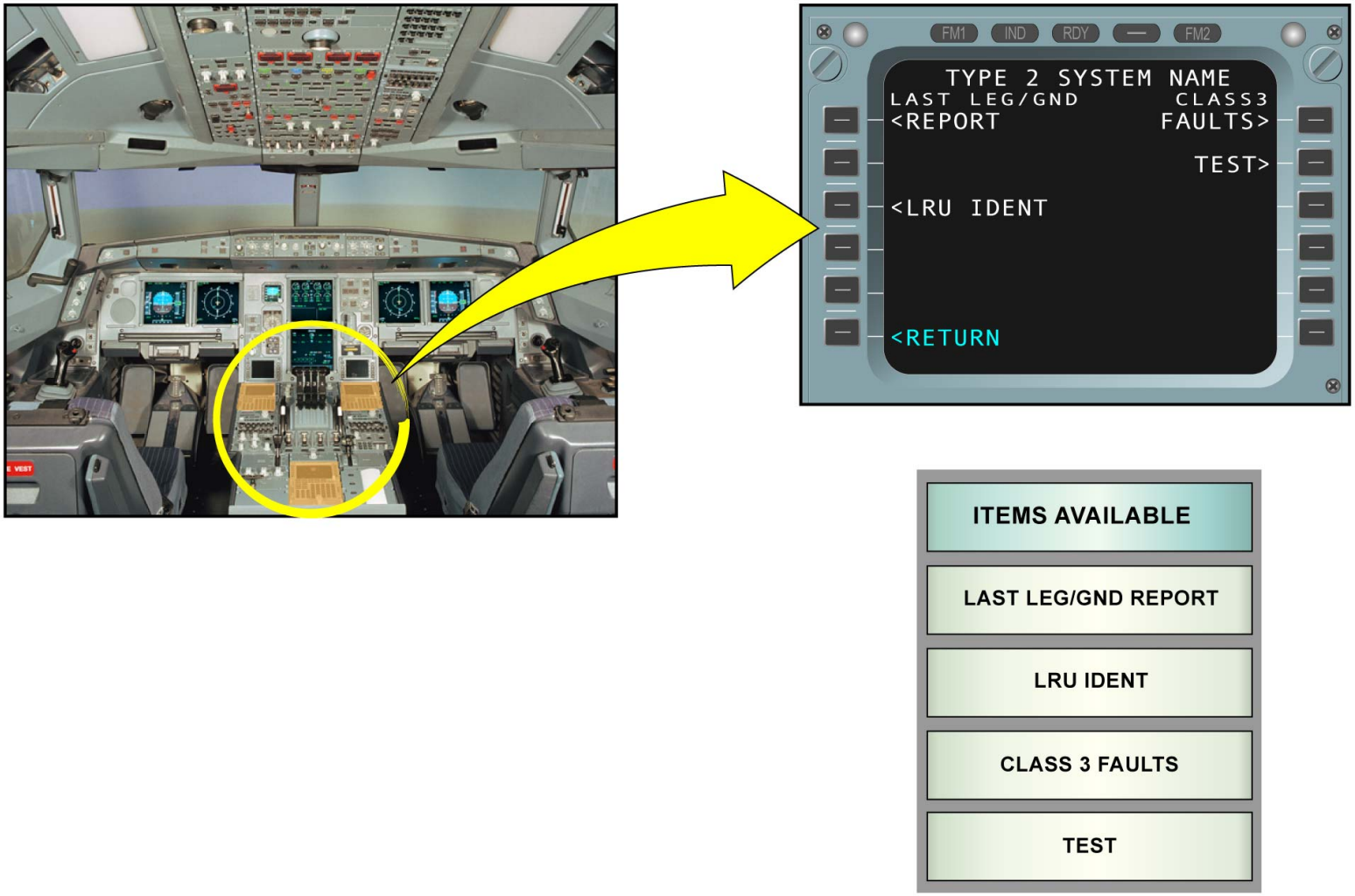

TYPE 2 SYSTEM TYPICAL MENU - LAST LEG/GND REPORT ... TEST

CMS OPERATION IN INTERACTIVE MODE (2)

TYPE 2 SYSTEM example MENU

To describe the contents of the different items of a type 2 system, we have chosen the Battery Charge Limiter 1(BCL) 1, part of the DC ELECTRICAL GENERATION function. This is the BCL 1 menu.

LAST LEG/GND REPORT

This report, formatted by the active CMC,presents, only 2 at a time, the fault messages with the 6-digit ATA reference and the class of the failure, which are permanently transmitted by the system. In case of failure detected on ground, after touch down, the fault message will be preceded by "GND".

LRU IDENT

This report, formatted by the active CMC presents the part number of the BCL 1.

CLASS 3 FAULTS

This report formatted by the active CMC, presents, only 2 at a time, the class 3 fault messages with the 6-digit ATA reference, which are permanently transmitted by the system.

TEST

During the progress of the test, some information is provided on the MCDU. If the test is OK, the CMC displays "TEST OK" on the MCDU screen. The following screens are a summary of the main screens shown in the topic.

G7508471 - G3NT1T0 - FM45D2F45C70602

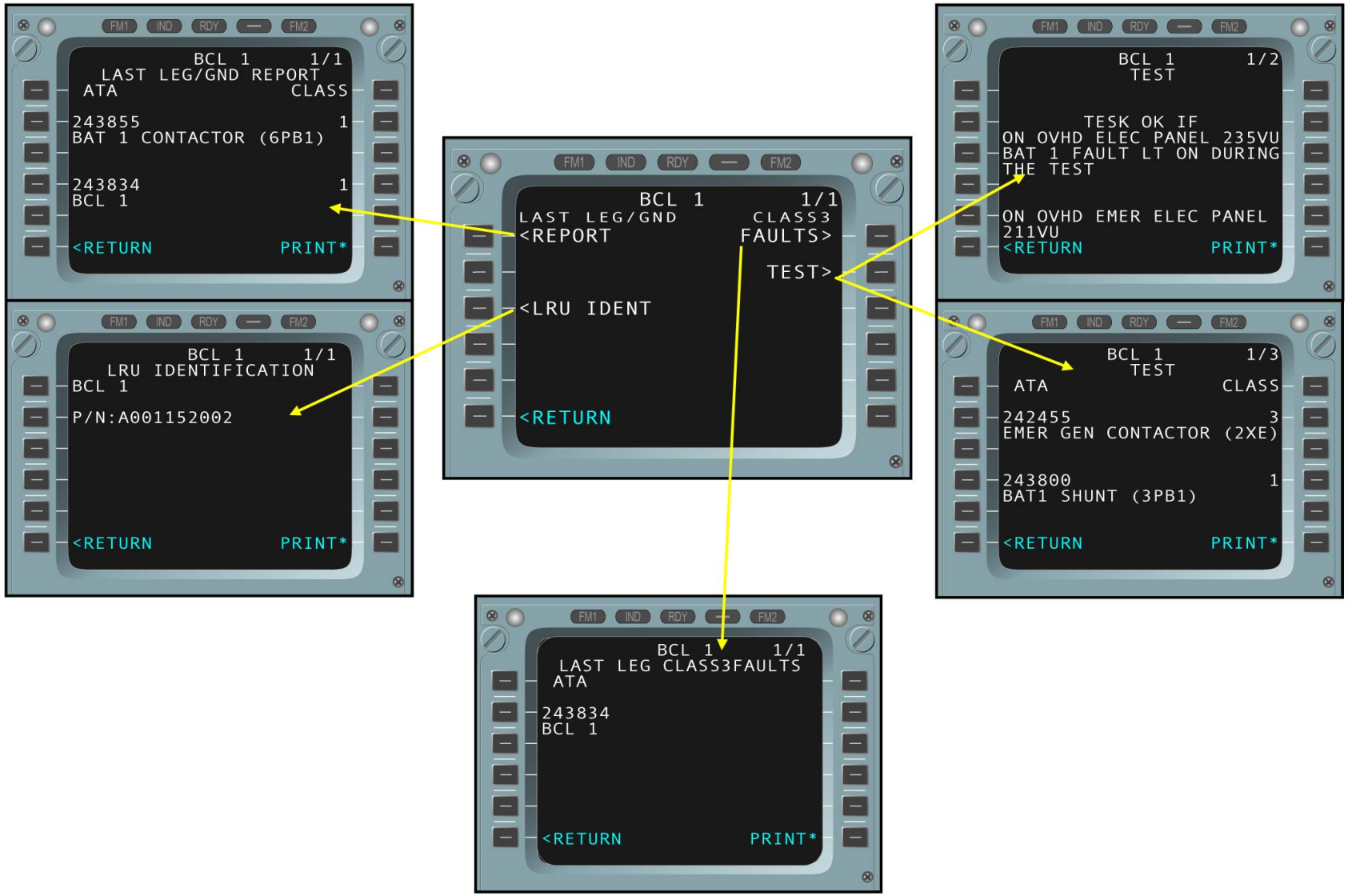

TYPE 2 SYSTEM EXAMPLE MENU - LAST LEG/GND REPORT ... TEST

G7508471 - G3NT1T0 - FM45D2F45C70602

CMS OPERATION IN INTERACTIVE MODE (2)

TYPE 3 SYSTEM TYPICAL MENU

This is a typical type 3 system menu. The menu is fully generated by the active CMC.

TEST AND RESET

The only possible item is TEST function or RESET function. In case of failure, the CMC displays the name of the tested or reset component. If the test or reset is OK the CMC displays "TEST or RESET OK".

TYPE 3 SYSTEM EXAMPLE MENU

To describe the contents of the different items, we have chosen 2 examples: Generator Control Unit (GCU) EMERGENCY and then Transformer Rectifier (TR) 1, in the AC and DC GENERATION function.

GCU EMER MENU

If the test is OK, the CMC displays "TEST OK" on the MCDU screen. If the test is not successful, the respective messages will appear on the MCDU screen.

TR 1 MENU

If the reset is not successful, the fault message shown on the figure is displayed.

G7508471 - G3NT1T0 - FM45D2F45C70602

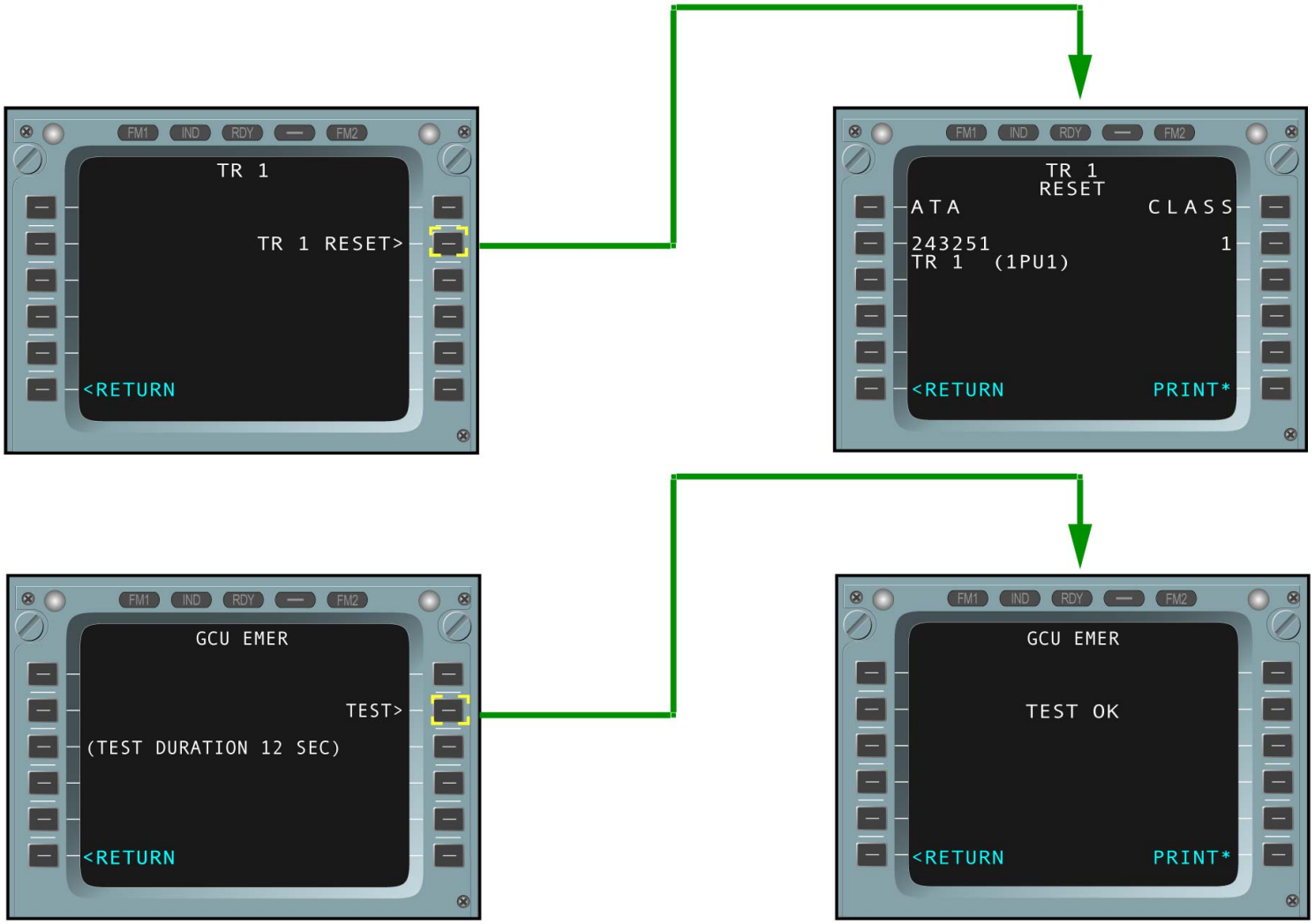

TYPE 3 SYSTEM TYPICAL MENU & TYPE 3 SYSTEM EXAMPLE MENU

G7508471 - G3NT1T0 - FM45D2F45C70602

CMS IN NORMAL MODE D/O (3)

GENERAL PARAMETERS

The Central Maintenance Computer (CMC) acquires and dispatches general information to the type 1 systems, and is the interface between the main clock and the system BITE, which use time and date data. If the main clock has failed, the CMC back-up clock takes over.
The CMC is the interface between the Flight Management Guidance and Envelope Computers (FMGECs) and the systems, which use flight number and city pair, such as the Air Traffic Service Unit (ATSU) and the Aircraft Condition Monitoring System (ACMS) only.
The CMC is the interface between the Digital Flight Data Recording System (FDRS) and the system BITE, which use the A/C identification.
In addition to its own warnings, the CMC processes the FDRS and ACMS warnings, which are sent to the Flight Warning Computers (FWCs).
The CMC is the interface between the FWCs and the system BITE concerning the flight phases. The CMC transmits the A/C configuration, which is processed by pin programming to all type 1 system BITE. This configuration is used to know the installation of optional equipment.
The CMC processes the DC1, DC2 and NULL maintenance phases independently from the flight phases and transmits them to all type 1 systems. These maintenance phases control the memorization of the BITE data and the leg management.

CAUTION: in the DC2 maintenance phase, on the A330, start the 1st engine; and on A340, start the 3rd engine.

For the constitution of these maintenance phases, the CMC receives information from various systems.
Type 2 systems process their own FLIGHT/GROUND condition and consequently manage their own data, whereas in type 1 systems, this condition is given by the maintenance phases sent by the CMC. The CMC must process a FLIGHT/GROUND condition to manage type 2 system BITE data. The CMC considers type 2 systems 'in flight' after take-off and 'on ground' after "landing gear compressed".

NOTE: Note: for type 1 systems, the flight condition is given by the NULL maintenance phase while the ground condition is given by the DC1+DC2 maintenance phases, sent by the CMC.

G7508471 - G3NT1T0 - FM45D7F45C80102

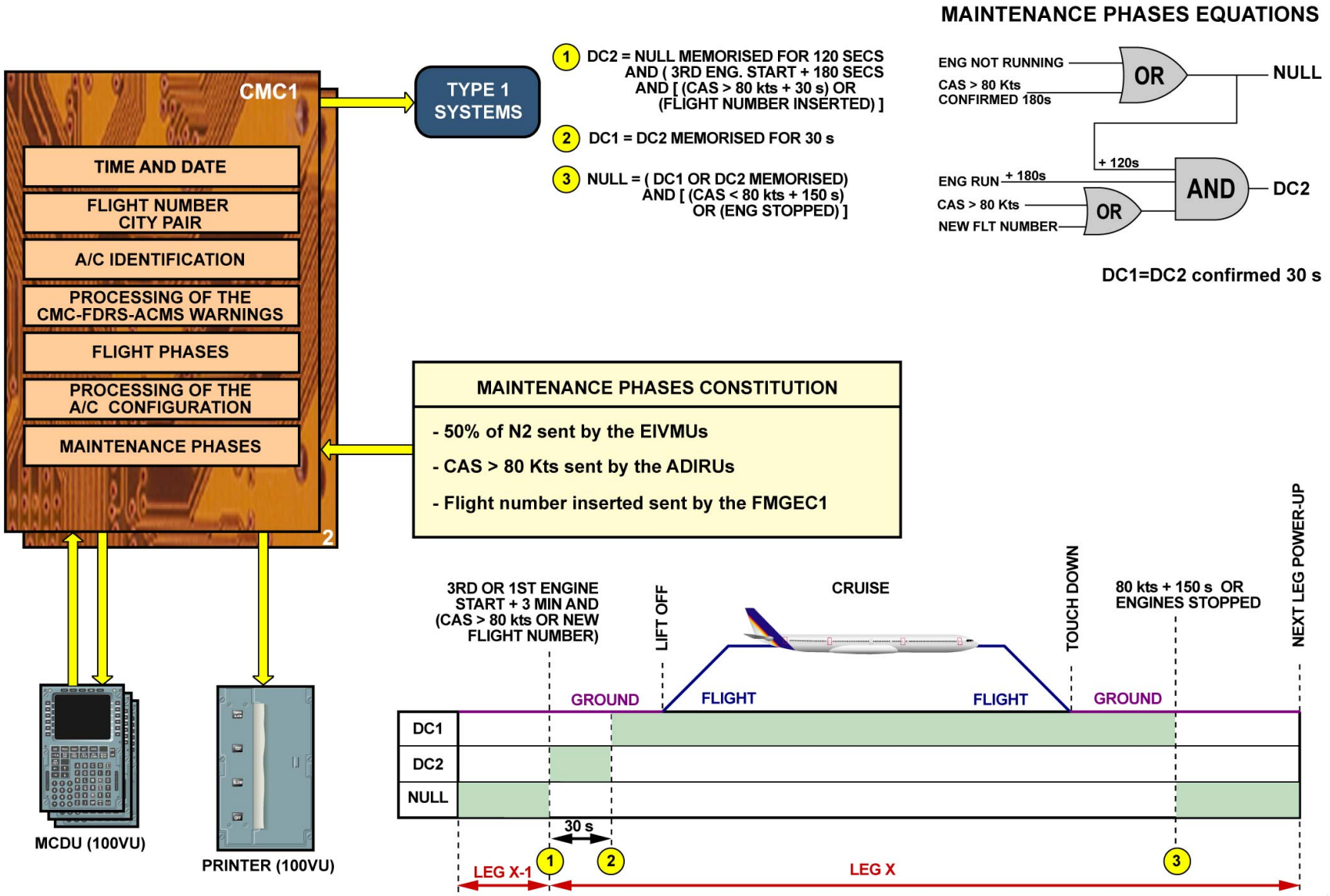

GENERAL PARAMETERS

G7508471 - G3NT1T0 - FM45D7F45C80102

CMS IN NORMAL MODE D/O (3)

CENTRAL MAINTENANCE COMPUTER / TYPE 1 SYSTEM

The fault processing, memorization and transmission to the CMC is different in each maintenance phase.

DC2 MAINTENANCE PHASE

When the leg starts, in the type 1 system computer, the contents of the LAST FLIGHT memory are transferred to the PREVIOUS FLIGHTS memory. The GROUND and the CLASS 3 FAULT memories are erased in the CMC, and the contents of the POST FLIGHT memory zone are transferred to the PREVIOUS FLIGHT memory zone.
When an internal class 1 or class 2 fault occurs, after detection and isolation of the faulty Line Replaceable Unit (LRU), the BITE processes a fault message, which is stored in the system BITE memory and transmitted to the CMC, where it is also memorized. At the same time, if there is a warning message, it is also memorized by the CMC.
The AVIONICS STATUS zone memorizes the name of the system affected as long as an external or internal fault is present. If an internal class 3 fault occurs, it is memorized in the system BITE memory.

DC1 MAINTENANCE PHASE

When an internal or external class 1 or class 2 fault occurs, after detection and isolation of the faulty LRU, the BITE processes a fault message, which is stored in the system BITE memory and transmitted to the CMC, where it is also memorized. At the same time, if there is a warning message, it is also memorized by the CMC.
The AVIONICS STATUS zone memorizes the name of the system affected as long as the fault is present. If a class 3 fault occurs, it is only memorized in the system BITE memory.
At the end of the flight, DC1/NULL transition, the CMC reanalyzes the fault message consolidation, to determine if it is HARD or INTERMITTENT, and processes the Post Flight Report (PFR), according to the spurious message filter, which is applied.

NULL MAINTENANCE PHASE

The system BITE transmits to the CMC, fault messages of any class, which are due to faults detected in the last flight. This is used to feed the "class 3 zone" when the CLASS 3 REPORT is requested.
When an internal fault of any class occurs, after detection and isolation of the faulty LRU, the BITE processes a fault message, which is stored in the system BITE ground memory only.
The AVIONICS STATUS zone memorizes the name of the system affected as long as an external or internal fault is present. If an internal class 3 fault occurs, it is memorized in the system BITE memory.

G7508471 - G3NT1T0 - FM45D7F45C80102

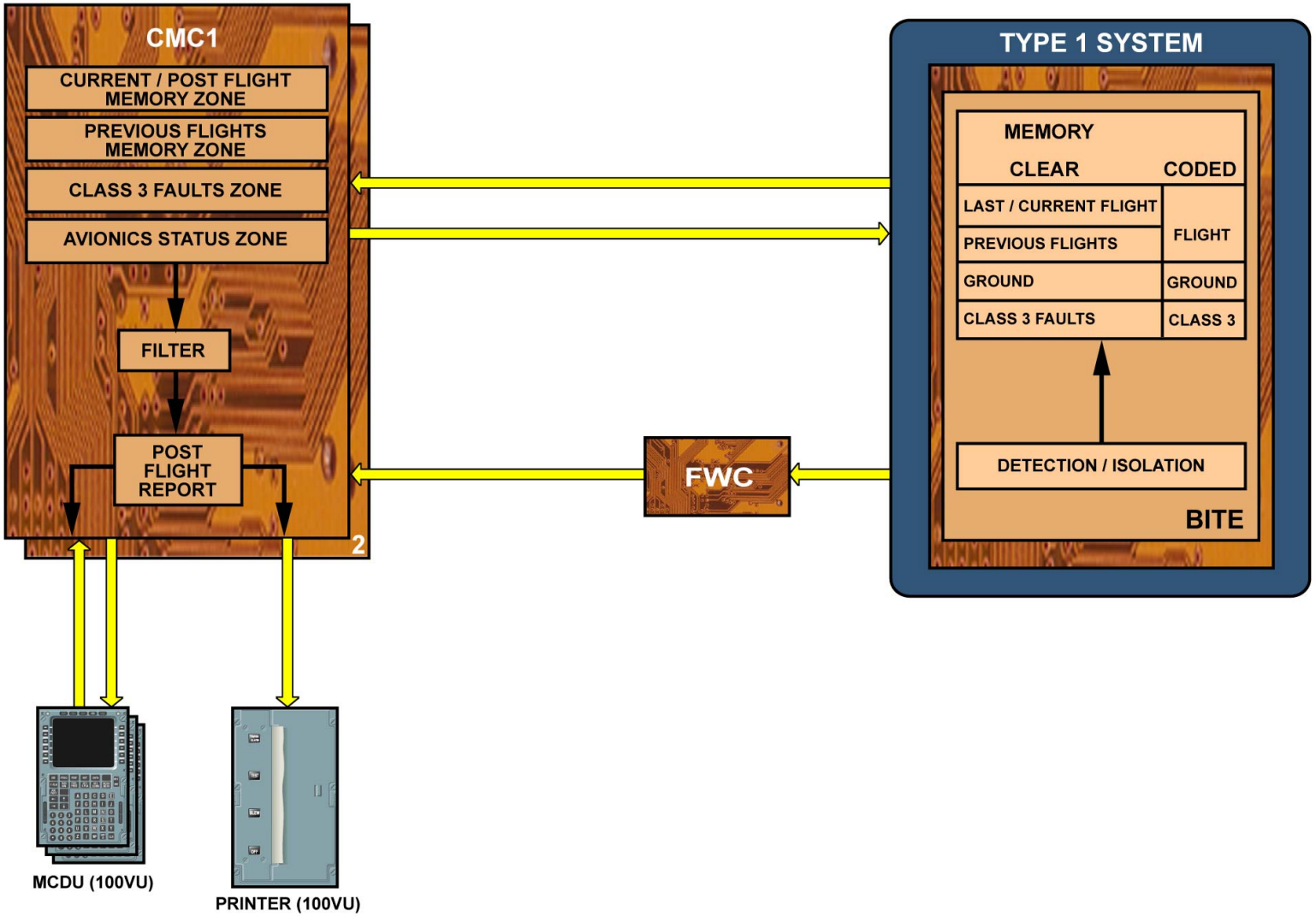

CENTRAL MAINTENANCE COMPUTER / TYPE 1 SYSTEM - DC2 MAINTENANCE PHASE ... NULL MAINTENANCE PHASE

G7508471 - G3NT1T0 - FM45D7F45C80102

CMS IN NORMAL MODE D/O (3)

CENTRAL MAINTENANCE COMPUTER / TYPE 2 SYSTEM

For type 2 systems, the leg starts at take-off.

FLIGHT MAINTENANCE PHASE

When the leg starts, the flight and ground system BITE memories are erased.
When an internal or external fault of any class occurs, after detection and isolation of the faulty LRU, the BITE processes a fault message, which is stored in the system BITE memory and transmitted to the CMC, where it is also memorized, except for class 3 faults. At the same time, if there is a warning message, it is also memorized by the CMC.
The AVIONICS STATUS zone memorizes the name of the system as long as the fault is present.

GROUND MAINTENANCE PHASE

The system BITE transmits to the CMC, fault messages of any class, which are due to internal faults detected in the last flight. This is used to feed the "class 3 zone" when the CLASS 3 REPORT is requested.
The type 2 system fault message consolidation is reanalyzed by the CMC at the DC1/NULL transition to process the PFR.
When an internal fault of any class occurs, after detection and isolation of the faulty LRU, the BITE processes a fault message in the system BITE ground memory and transmits it to the CMC to update the AVIONICS STATUS zone. The AVIONICS STATUS zone memorizes the name of the system as long as the fault is present.

G7508471 - G3NT1T0 - FM45D7F45C80102

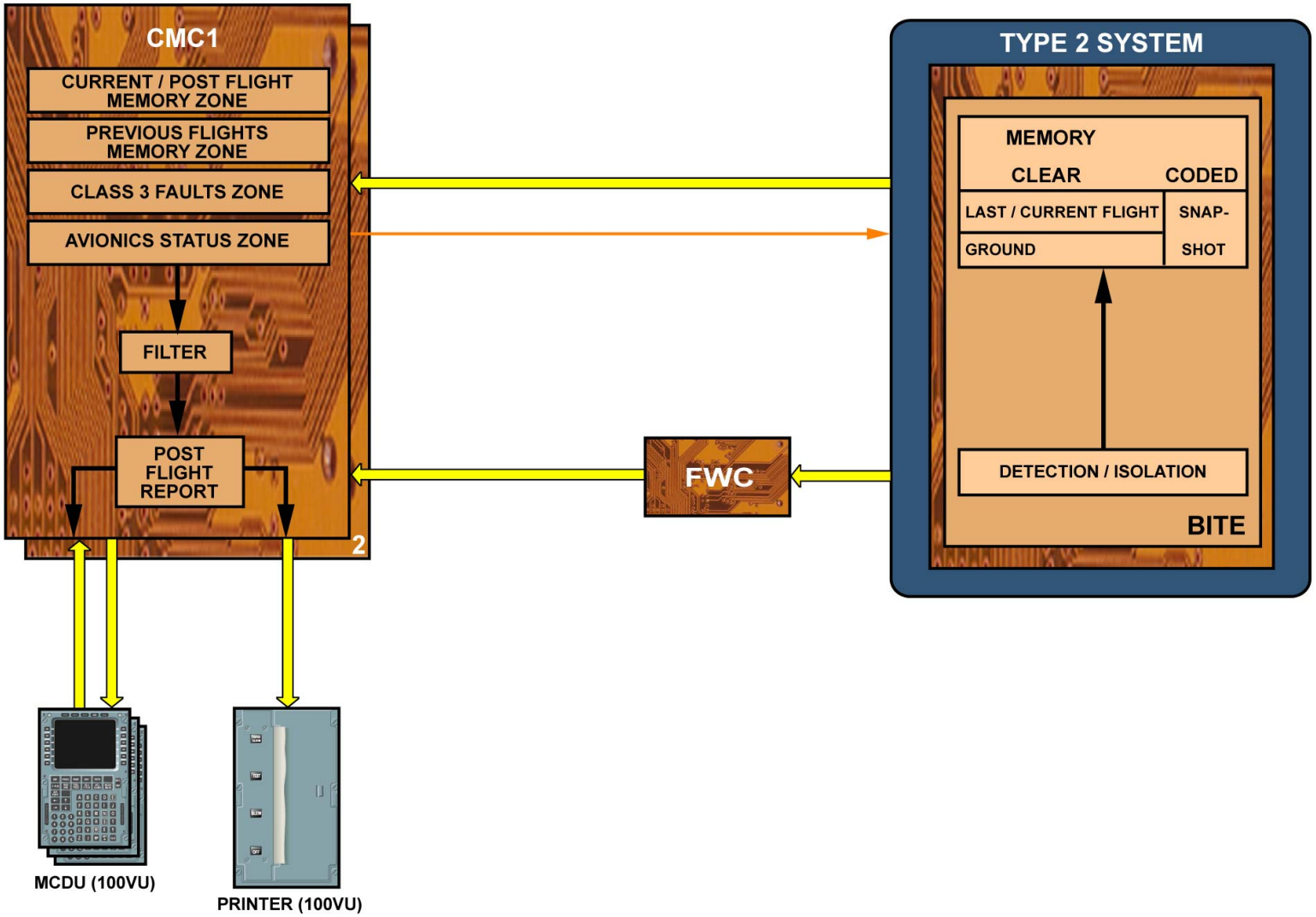

CENTRAL MAINTENANCE COMPUTER / TYPE 2 SYSTEM - FLIGHT MAINTENANCE PHASE & GROUND MAINTENANCE PHASE

G7508471 - G3NT1T0 - FM45D7F45C80102

CMS IN NORMAL MODE D/O (3)

CENTRAL MAINTENANCE COMPUTER / TYPE 3 SYSTEM

The type 3 system BITE has no memory.

DC 1 + DC 2 MAINTENANCE PHASE

When a type 3 system unit fails, the system status is sent to the CMC. The CMC processes the class 1 fault message and stores it in its CURRENT FLIGHT memory zone. At the same time, if there is a warning message, it is also memorized.
The AVIONICS STATUS zone memorizes the name of the system as long as the fault is present. The CMC consolidates the fault status at DC1/NULL transition to process the PFR.

NULL MAINTENANCE PHASE

The system status is continuously sent to the CMC, but only the AVIONICS STATUS zone is updated (no memorization).
The AVIONICS STATUS zone memorizes the name of the system as long as the fault is present.

G7508471 - G3NT1T0 - FM45D7F45C80102

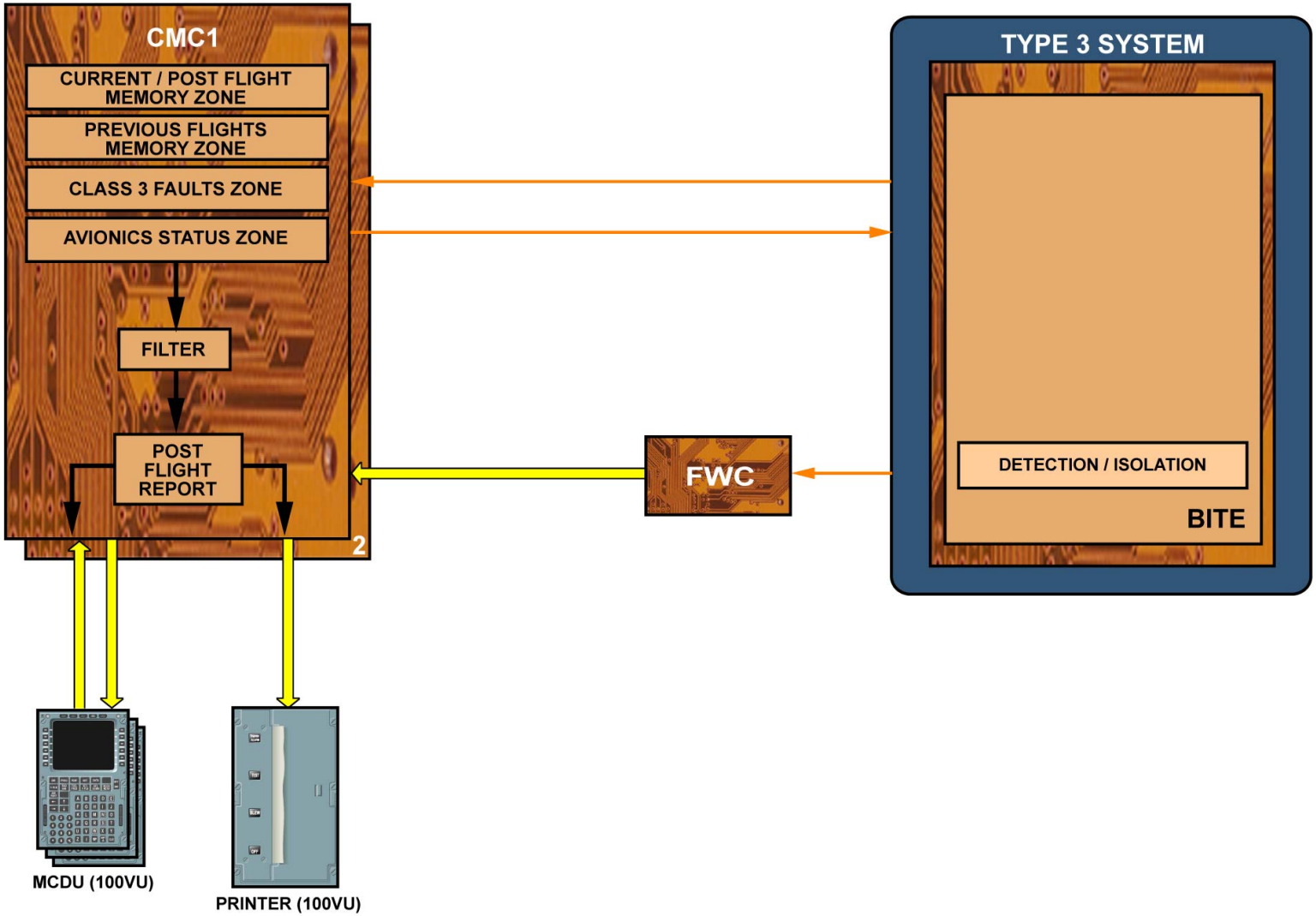

CENTRAL MAINTENANCE COMPUTER / TYPE 3 SYSTEM - DC 1 + DC 2 MAINTENANCE PHASE & NULL MAINTENANCE PHASE

G7508471 - G3NT1T0 - FM45D7F45C80102

CMS IN NORMAL MODE D/O (3)

CORRELATION

The purpose of correlation is to group all the fault messages related to the same event. The association provided between fault messages and ECAM messages on the PFR print-out, is also a correlation: it is based on time and on the ATA references (2 min. correlation). (Only one failure message for one A/C failure event).
When a fault message "A" appears, the CMC opens a correlation item. During 1 min, it associates all the fault messages with the same ATA chapter identification, taking the first 3 or 4 digits, and memorizes, in the correlation item, only the name of the first 6 systems (called IDENTIFIERS), which sent the fault messages.
The CMC also associates the fault messages generated by other systems, operationally affected by this failure, which is an external failure for them. Remember that the fault messages are always memorized in their own system BITE memories. After 1 min, the IDENTIFERS item is closed.
If the message "A" is an internal fault message, it is displayed with its associated source. If it is an external fault message, it is displayed only if there is no internal message concerning the same event. Otherwise, the internal fault will be displayed instead.

G7508471 - G3NT1T0 - FM45D7F45C80102

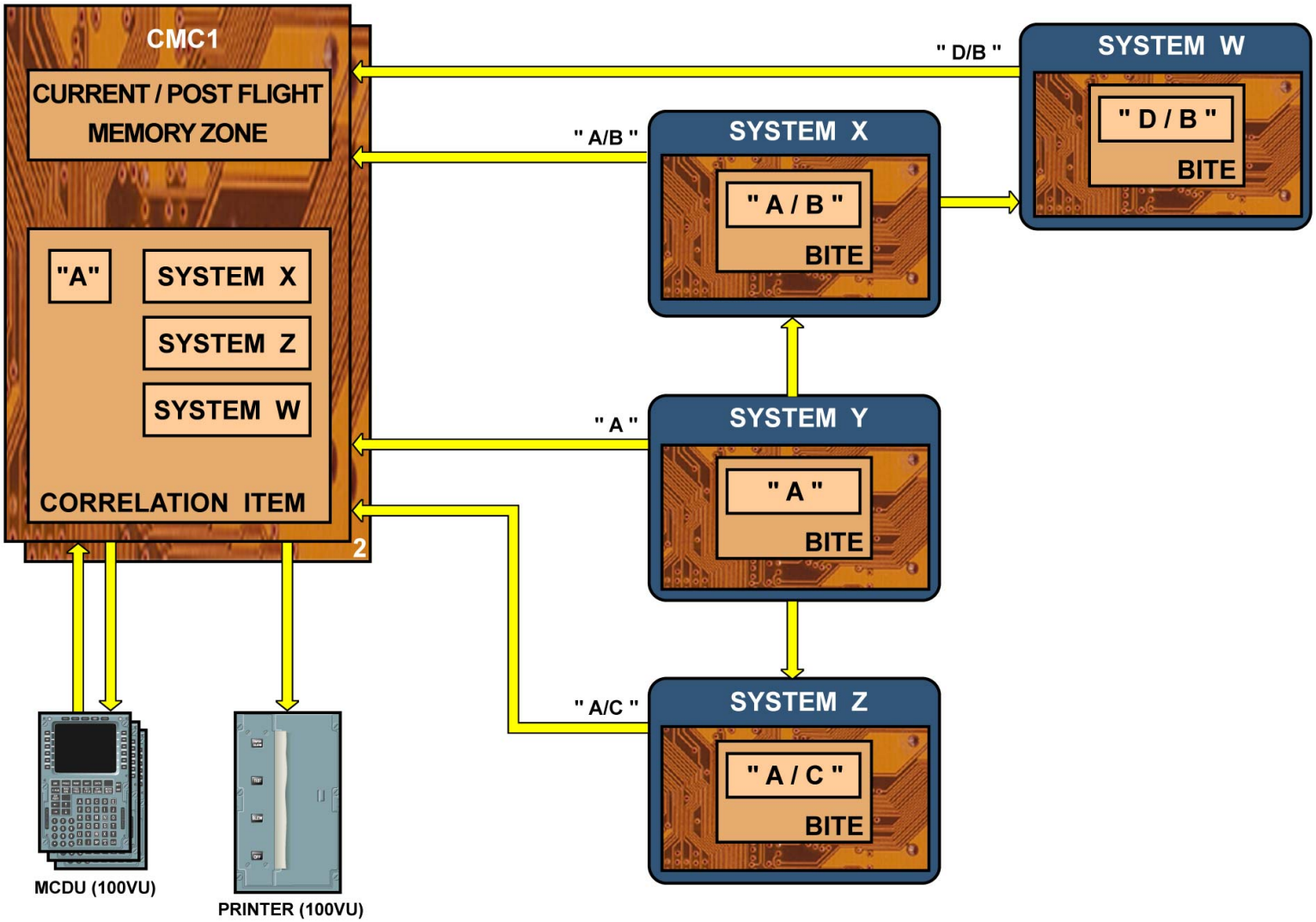

CORRELATION

G7508471 - G3NT1T0 - FM45D7F45C80102

CMS BACK-UP FUNCTIONS (2)

CMS BACK-UP CLOCK FUNCTION

This module describes the Central Maintenance System (CMS) back-up clock function.

NORMAL OPERATION

In normal operation, the main clock provides date and time data to the ECAM and the system BITEs computers through Central Maintenance Computer (CMC) 1 (or CMC 2). The CMCs cyclically check and validate the time and the date from the clock every second. If the acquisition from the clock to CMC 1 is invalid, the information from the opposite CMC (X-TALK BUS) is used as a back-up mode (CMC 1 failure or CMC 1 P/B OFF).

G7508471 - G3NT1T0 - FM45D8F45D80302

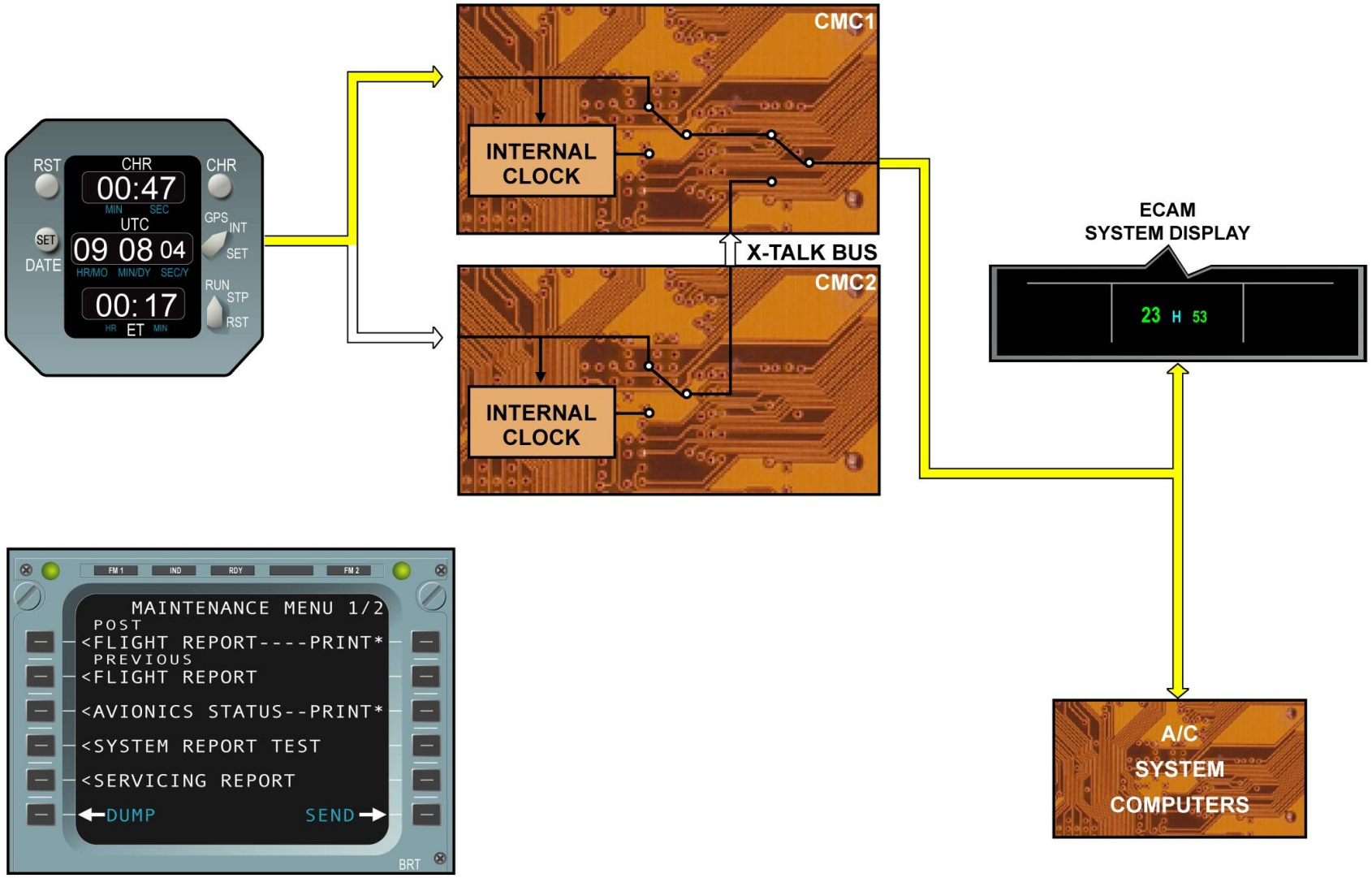

CMS BACK-UP CLOCK FUNCTION - NORMAL OPERATION

G7508471 - G3NT1T0 - FM45D8F45D80302

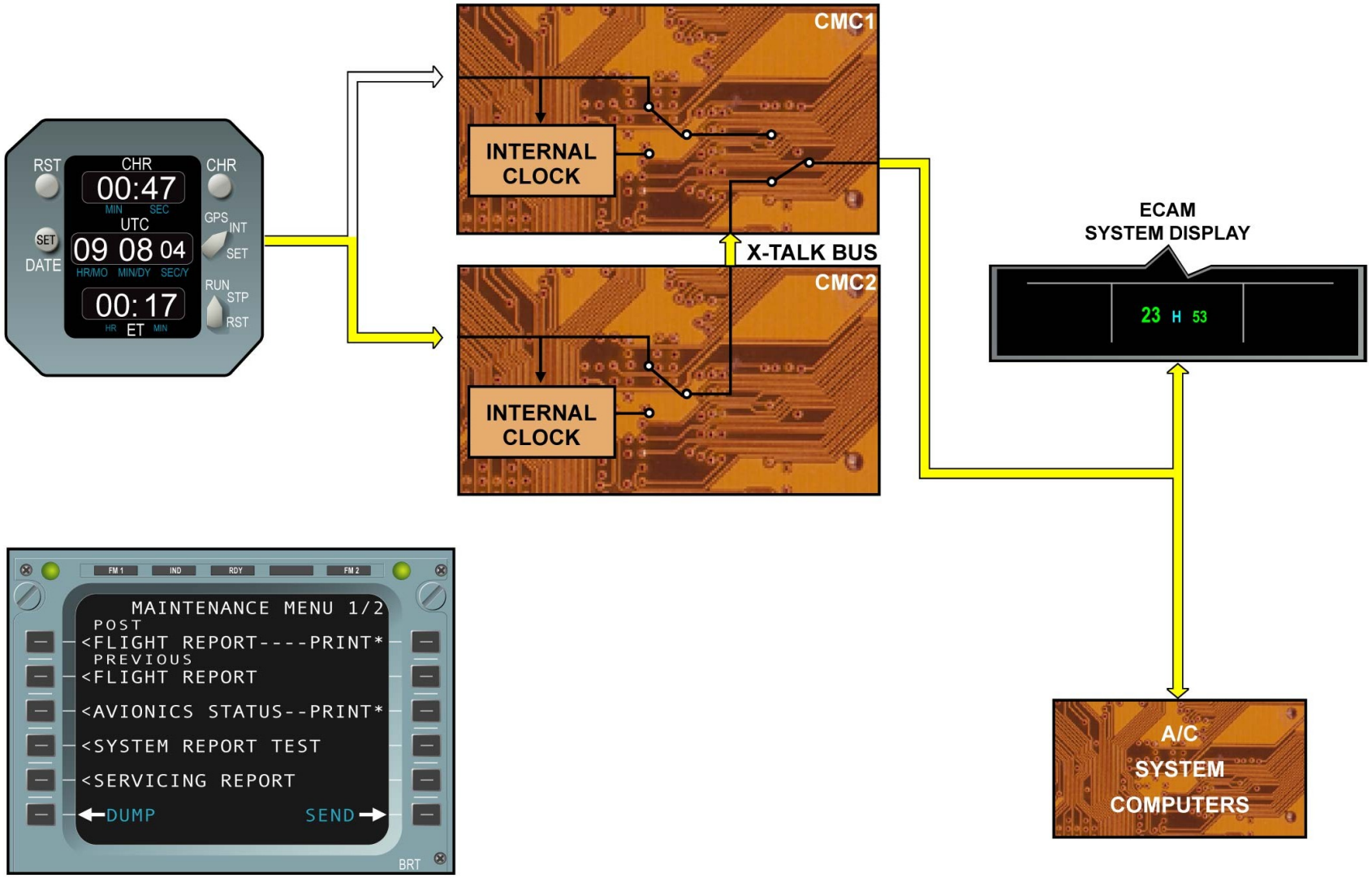

CMS BACK-UP CLOCK FUNCTION - NORMAL OPERATION

G7508471 - G3NT1T0 - FM45D8F45D80302

This Page Intentionally Left Blank

G7508471 - G3NT1T0 - FM45D8F45D80302

CMS BACK-UP FUNCTIONS (2)

CMS BACK-UP CLOCK FUNCTION (continued)

ABNORMAL OPERATION

In case of main clock failure (in flight or on ground), the active CMC internal clock takes over. The CMC internal clock supplies time and date to the ECAM and the A/C system computers through a software switching.

In addition, if a long power interruption affects both CMCs, (for more than 5 seconds), the UTC/DATE INIT item is added in the CMS menu on the MCDU. In this case time and date are no longer provided to the ECAM and A/C system computers.

These functions enable the crew to initialize the time and date. In this menu, UTC and date can be initialized by entering data in the scratchpad and by pressing the corresponding INIT key. This initialization is only possible from one MCDU (No < on the other MCDUs).

Supposing that you have already initialized the date and entered the UTC in the scratchpad, you have to validate it by pressing the correct key.

G7508471 - G3NT1T0 - FM45D8F45D80302

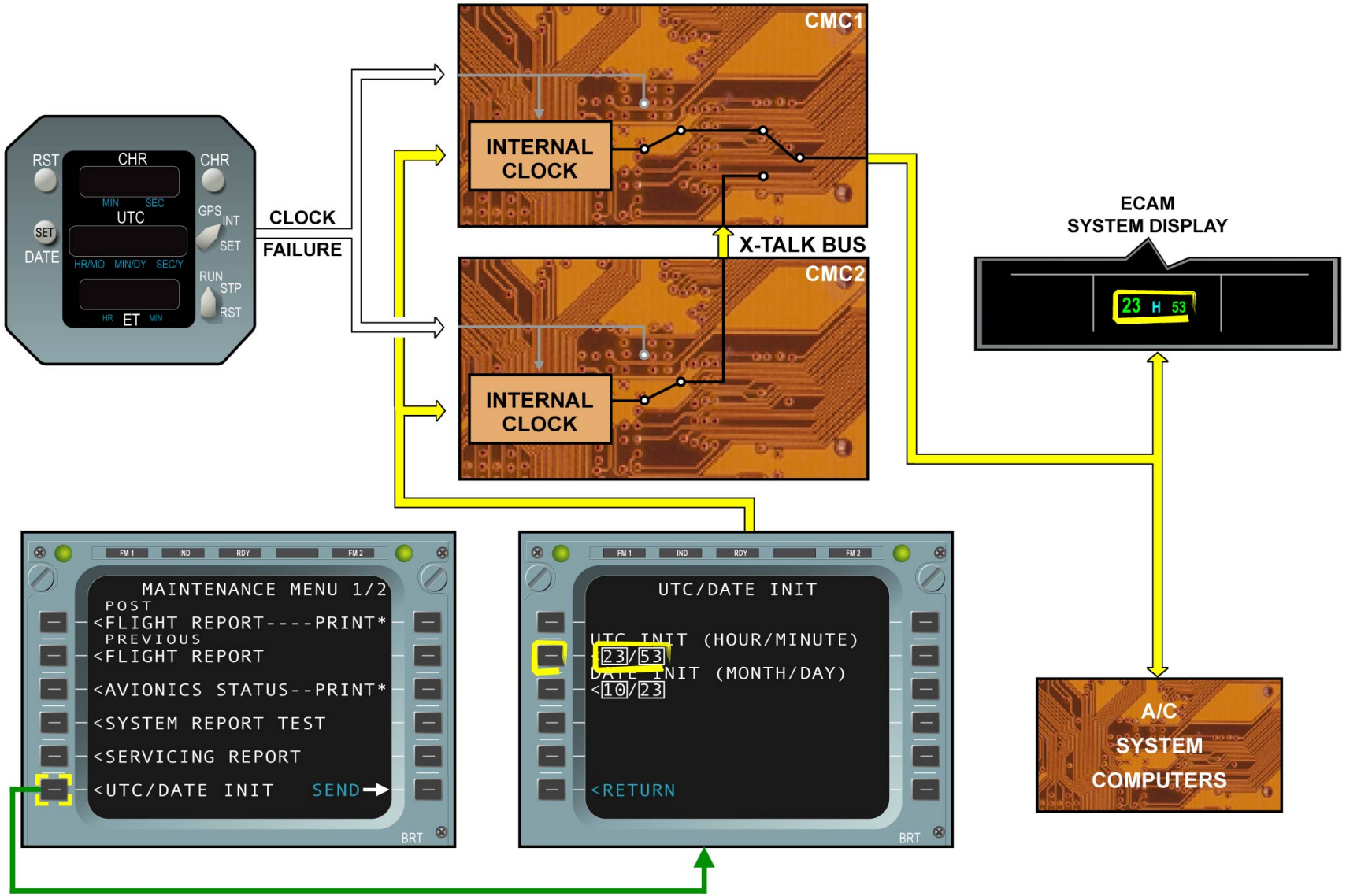

CMS BACK-UP CLOCK FUNCTION - ABNORMAL OPERATION

G7508471 - G3NT1T0 - FM45D8F45D80302

CMS BACK-UP FUNCTIONS (2)

CMS RECONFIGURATION

This part of the module describes the possible reconfigurations of the CMCs.

GENERAL

The A/C systems send their BITE information in parallel to the 2 CMCs which acquire and process information in the same manner. In normal operation, CMC 1 is active; CMC 2 became active (automatic switching) in case of CMC 1 failure or an action on the relevant P/BSW on the overhead panel in the cockpit.

AUTOMATIC SWITCHING

The automatic switching occurs when the CMC 1 internal monitoring detects a hardware or software failure. In this case, CMC 2 communicates with the type 1 systems via CMC 1 internal switching stages and with the type 2 and 3 systems via discrete links. No information is provided to identify the active CMC except "MAINTENANCE/CMC 1" message which is displayed on the SD/STATUS PAGE.

MANUAL SWITCHING

CMC manual switching is possible via a CMC 1/AUTO-OFF P/B. This can be used in case of problem (communication with a given system) or for maintenance purpose.

G7508471 - G3NT1T0 - FM45D8F45D80302

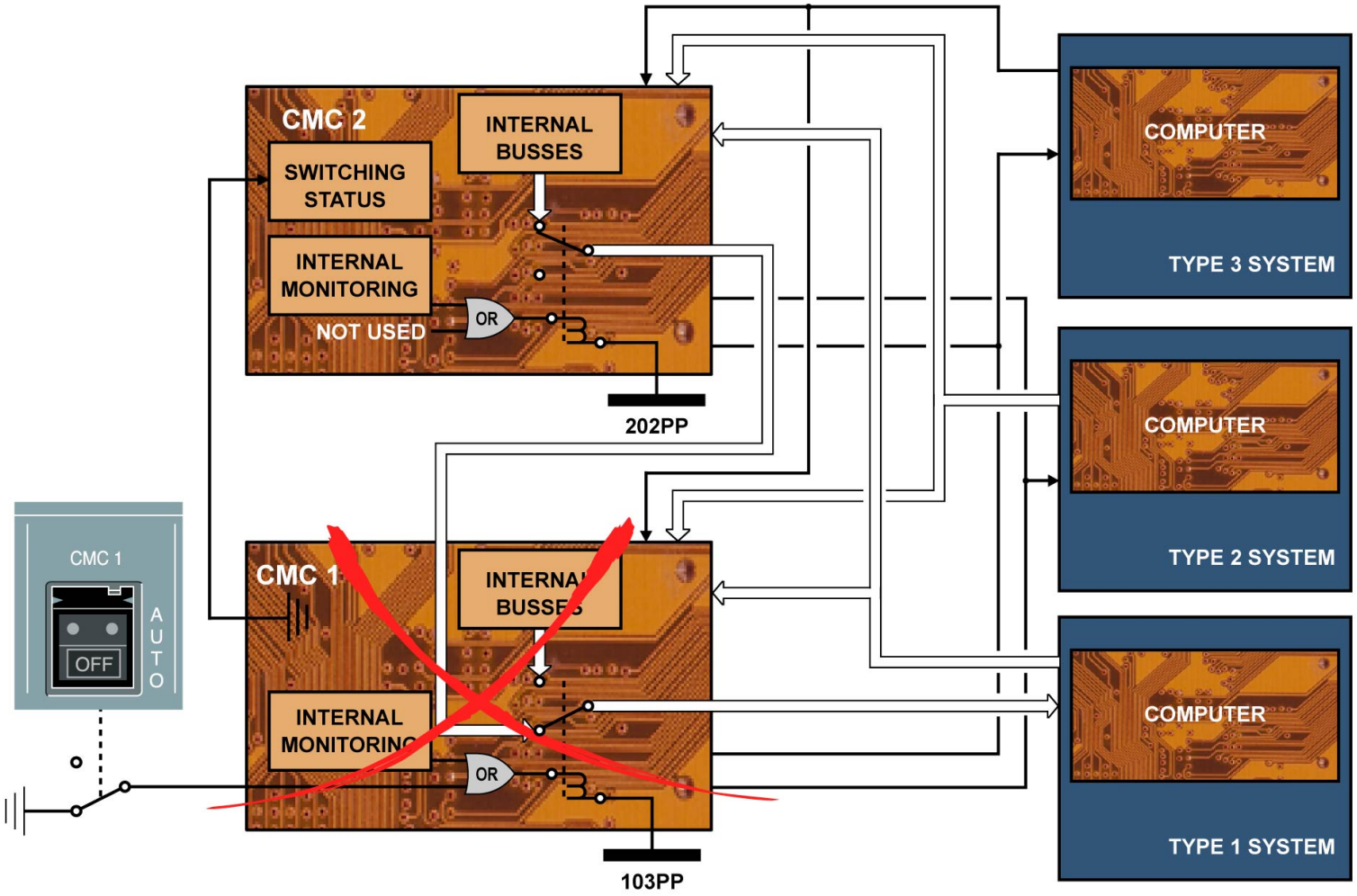

CMS RECONFIGURATION - GENERAL ... MANUAL SWITCHING

G7508471 - G3NT1T0 - FM45D8F45D80302

CMS INTERFACE (3)

GENERAL

Most of the A/C systems communicate with the Central Maintenance Computers (CMCs) by High Speed (HS) and Low Speed (LS) ARINC 429 buses and by discretes.

USERS INTERFACES

Each CMC communicates through 3 LS ARINC 429 buses (C1 to C3) with the 3 MCDUs, the printer and the Air Traffic Service Unit (ATSU). Each CMC also has 1 HS ARINC 429 output communication (com) bus (CMC-Multipurpose Disk Drive Unit (MDDU)).These com buses enable dialog with the active CMC and transmission of general parameters (e.g.: maintenance phases, flight phases). In case of CMC 1 inactive, CMC 2 communicates with user interfaces through CMC 1.
Each CMC is fed by these user interfaces through LS and HS ARINC 429 buses for protocol transmission and BITE information. Each MCDU is also linked to the CMCs by a discrete (ON/OFF).

SYSTEM TYPES COMPUTERS

There is a detailed description of the different type systems.

TYPE 1 SYSTEM

Each CMC communicates with Type 1 system computers through 6 LS A429 buses (M1 to M6). In interactive mode these maintenance buses enable dialog between the active CMC and the system BITEs. In normal mode, they allow the dispatch of acquired general parameters (e.g. time from the clock) to the system BITEs. In case of CMC 1 inactive, CMC 2 communicates with Type 1 system computers through CMC 1.
In normal mode, each Type 1 system computer permanently transmits BITE information to the CMCs through LS or HS A429 buses. Some Type 1 systems also transmit general parameters (e.g. time and date from the clock, soft pin prog from the ADIRU, warning messages and flight phases from FWC). In interactive mode, the Type 1 system computers transmit displayable information on these buses (text, characters) processed by their BITE.

TYPE 2 SYSTEM

The active CMC controls each Type 2 system computer with a discrete which is used to test the system. Each Type 2 system computer permanently transmits BITE information through an A429 LS bus and the result of the test.

TYPE 3 SYSTEM

The active CMC controls each Type 3 system with a discrete which is used to test or reset the system. Each Type 3 system indicates its status with a discrete.

CMC/CMC INTERFACES

The CMCs communicate with each other through 2 HS A429 buses, called X-TALK buses, for exchange of general parameters. For each CMC, the opposite CMC is considered as a full system BITE and transmits its maintenance message through its X-TALK bus. The status of the CMCs (master/slave logic) is ensured by 2 discretes. The communication and the maintenance buses link CMC 2 to CMC 1 enabling dialog of systems with CMC 2 if it becomes active.

PIN PROGRAMMING

Upon energization, the CMCs process their own configuration according to software pin program received by ARINC messages and hardware pin program directly connected to the CMCs. The active CMC uses the hardware pin program to determine the A/C configuration (e.g. CMC side, A/C Type) and the optional equipment.

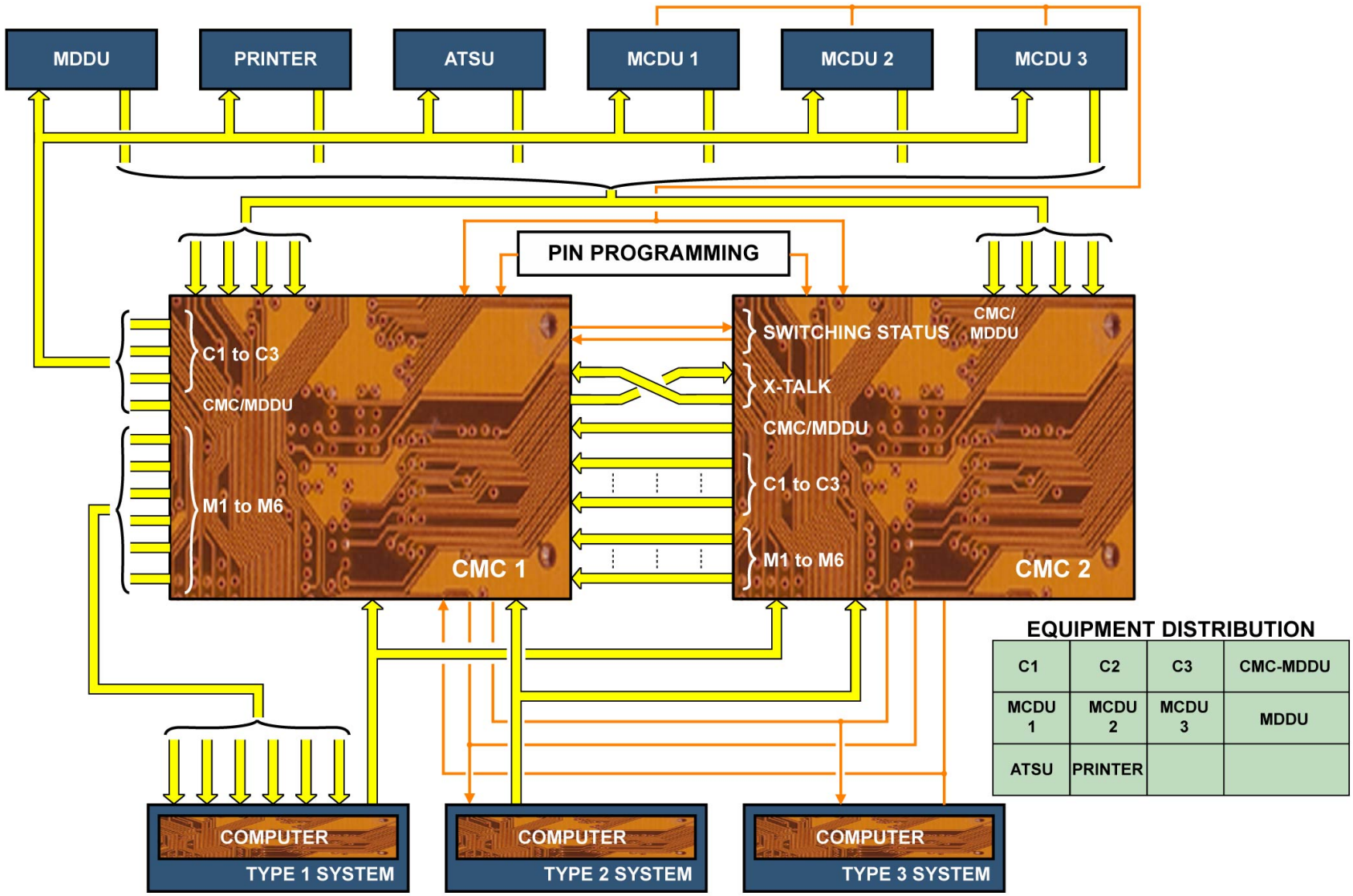

EQUIPMENT DISTRIBUTION

C1	C2	C3	CMC-MDDU
MCDU 1	MCDU 2	MCDU 3	MDDU
ATSU	PRINTER		

GENERAL ... PIN PROGRAMMING

G7508471 - G3NT1T0 - FM45DC000000001

SERVICING REPORT D/O (3)

GENERAL

The SERVICING REPORT function provides, in flight or on ground, report of different parameters, which have to be periodically checked, and which may induce servicing actions. The servicing report is accessible through the MCDU. It can also be printed, dumped or transmitted to the Air Traffic Service Unit (ATSU).

G7508471 - G3NT1T0 - FM45D4F45SA0202

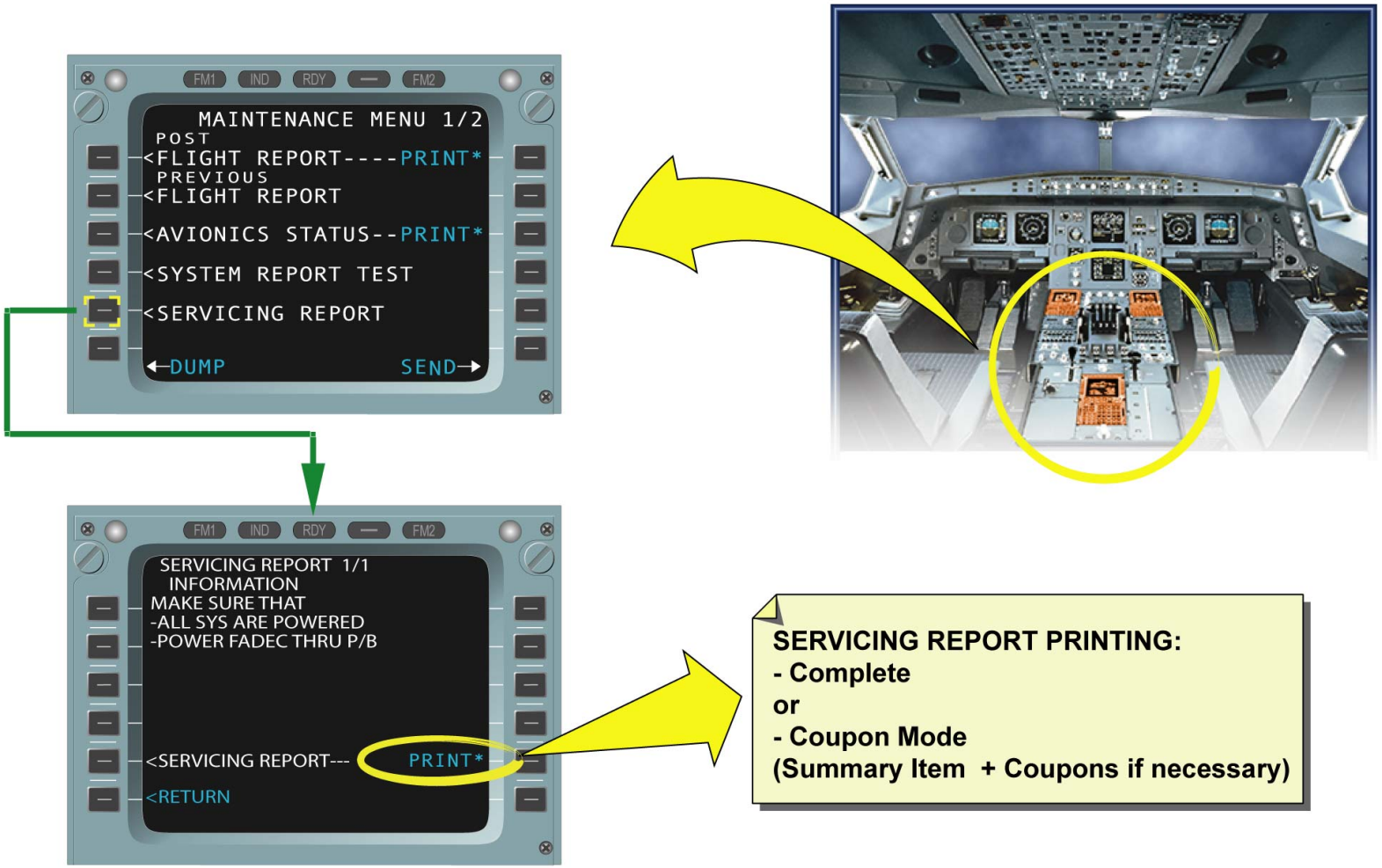
FM1
IND
RDY
FM2
MAINTENANCE MENU 1/2
POST
<FLIGHT REPORT----PRINT*
PREVIOUS
<FLIGHT REPORT
<AVIONICS STATUS--PRINT*
<SYSTEM REPORT TEST
<SERVICING REPORT
←DUMP
SEND→
SERVICING REPORT 1/1
INFORMATION
MAKE SURE THAT
-ALL SYS ARE POWERED
-POWER FADEC THRU P/B
<SERVICING REPORT---
PRINT*
<RETURN
SERVICING REPORT PRINTING:
- Complete
or
- Coupon Mode
(Summary Item + Coupons if necessary)

GENERAL

SERVICING REPORT D/O (3)

REPORT

The servicing report is composed of the different items listed in the table as:
- engines,
- Integrated Drive Generator (IDG),
- APU,
- hydraulic,
- fuel,
- L/G,
- oxygen,
- door and slide bottles,
- water/waste,
- air conditioning.

The servicing report can be presented in 3 ways:
- complete format,
- coupon mode printout,
- MCDU presentation.

COMPLETE FORMAT

In this case the report is composed of all servicing and summary items presented on two pages. This report is printable manually or automatically. The report shown in the next figures are presented as an example.

G7508471 - G3NT1T0 - FM45D4F45SA0202

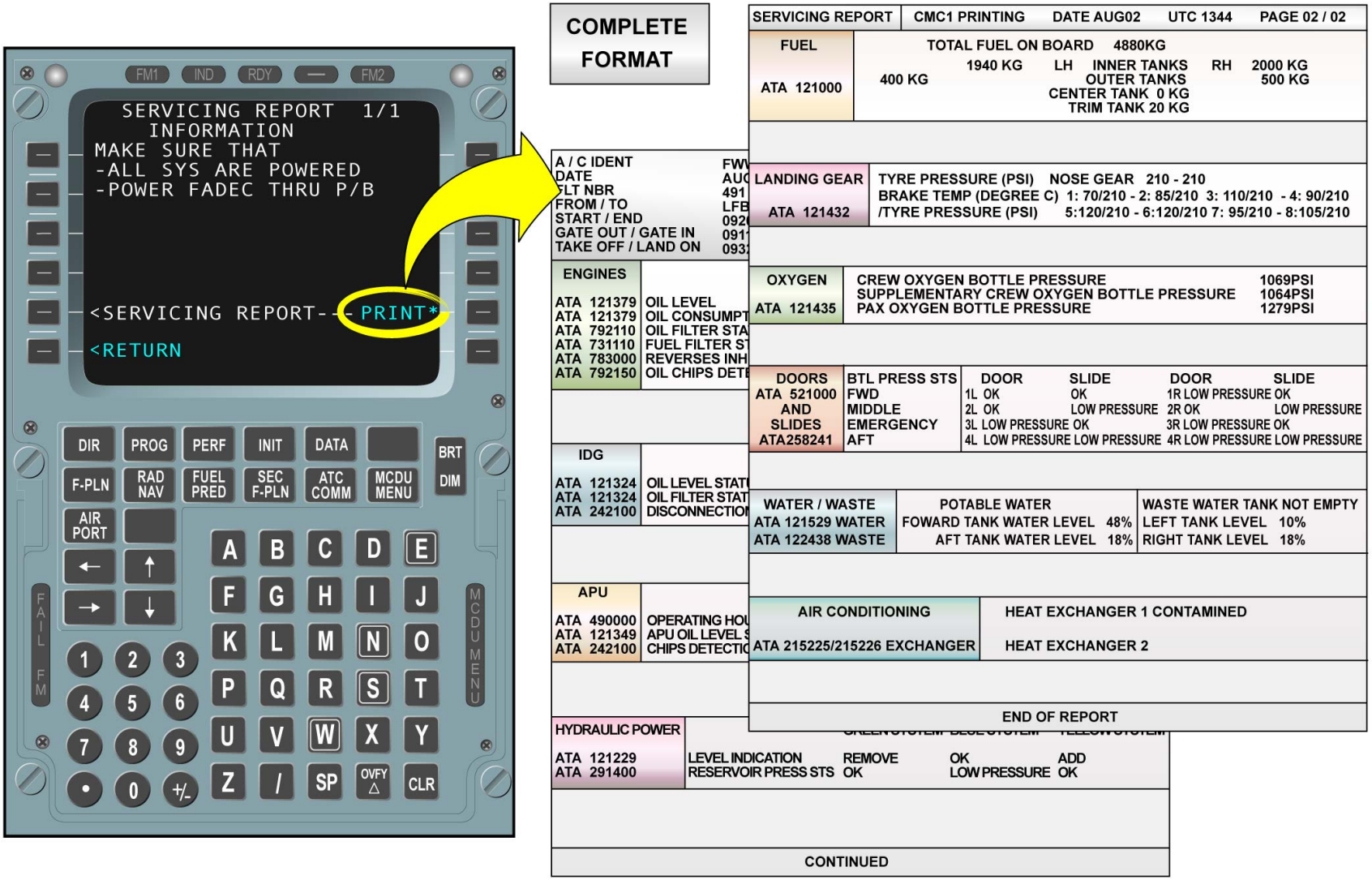

REPORT - COMPLETE FORMAT

G7508471 - G3NT1T0 - FM45D4F45SA0202

SERVICING REPORT D/O (3)

REPORT (continued)

COUPON MODE

The purpose of the coupon mode is to present to the user only items needing action.
First, a SUMMARY COUPON is printed, followed by the items where a parameter is under the minimum or above the maximum value of a threshold. If a servicing item status is CHECK in the summary coupon, the summary coupon will be followed by the servicing item coupon, otherwise the status is OK.

MCDU PRESENTATION

The servicing report which is displayed on the MCDU is complete and therefore includes all parameters. It consists of 11 MCDU pages. Pressing the up and down arrow keys gives you access to the next (or previous) pages that make up the servicing report. The MCDU is only used as a back-up means for checking the servicing report.

G7508471 - G3NT1T0 - FM45D4F45SA0202

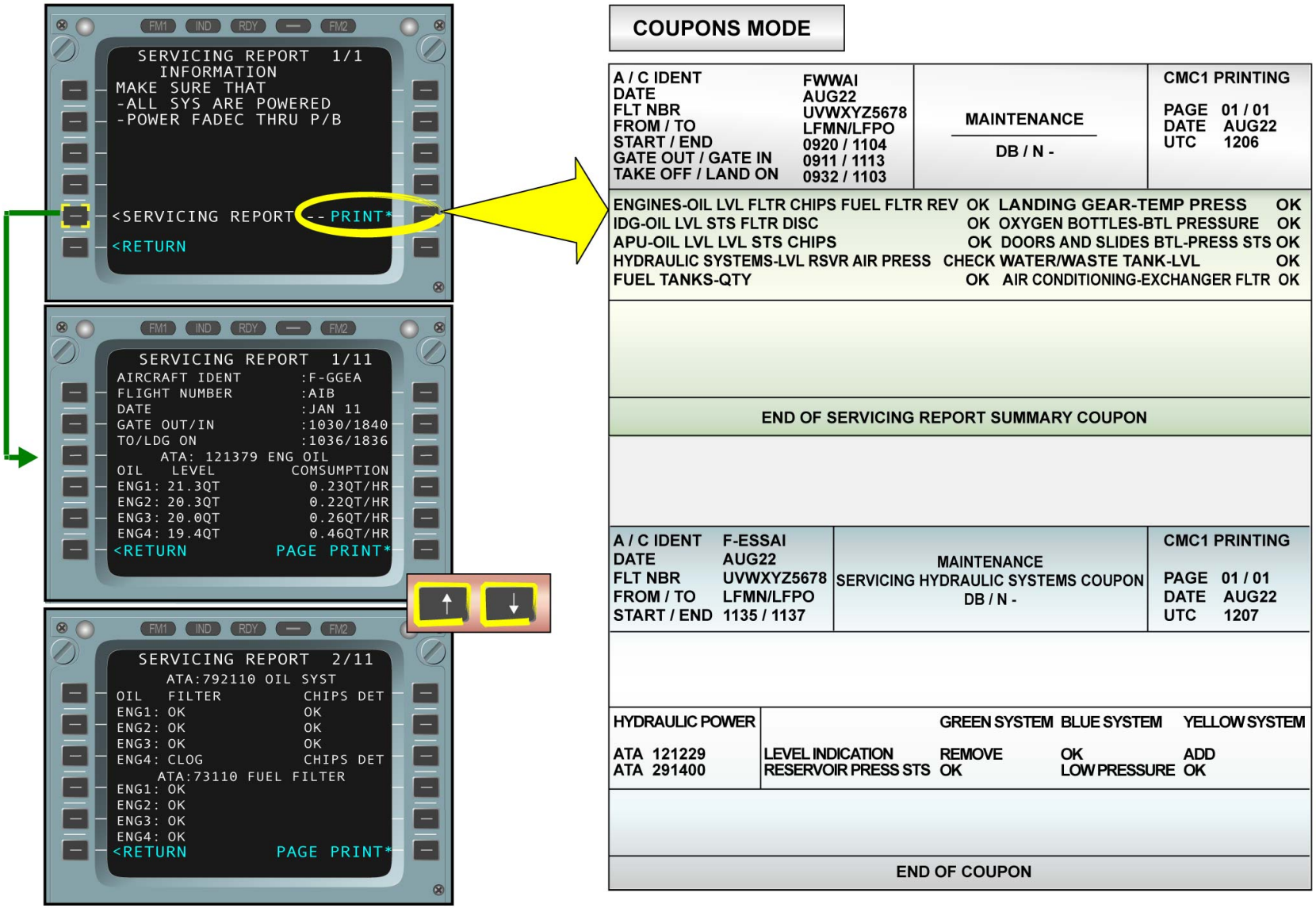

REPORT - COUPON MODE & MCDU PRESENTATION

G7508471 - G3NT1T0 - FM45D4F45SA0202

SERVICING REPORT D/O (3)

PROGRAMMING

It is possible to program, through the MCDU, certain functions related to the servicing report. You can program a complete report or a coupon mode report.
You can also program the automatic transmission to the printer, the ATSU, and the Multipurpose Disk Drive Unit (MDDU). Non-programmed printouts, dumps or transmissions to the ground have to be made manually.

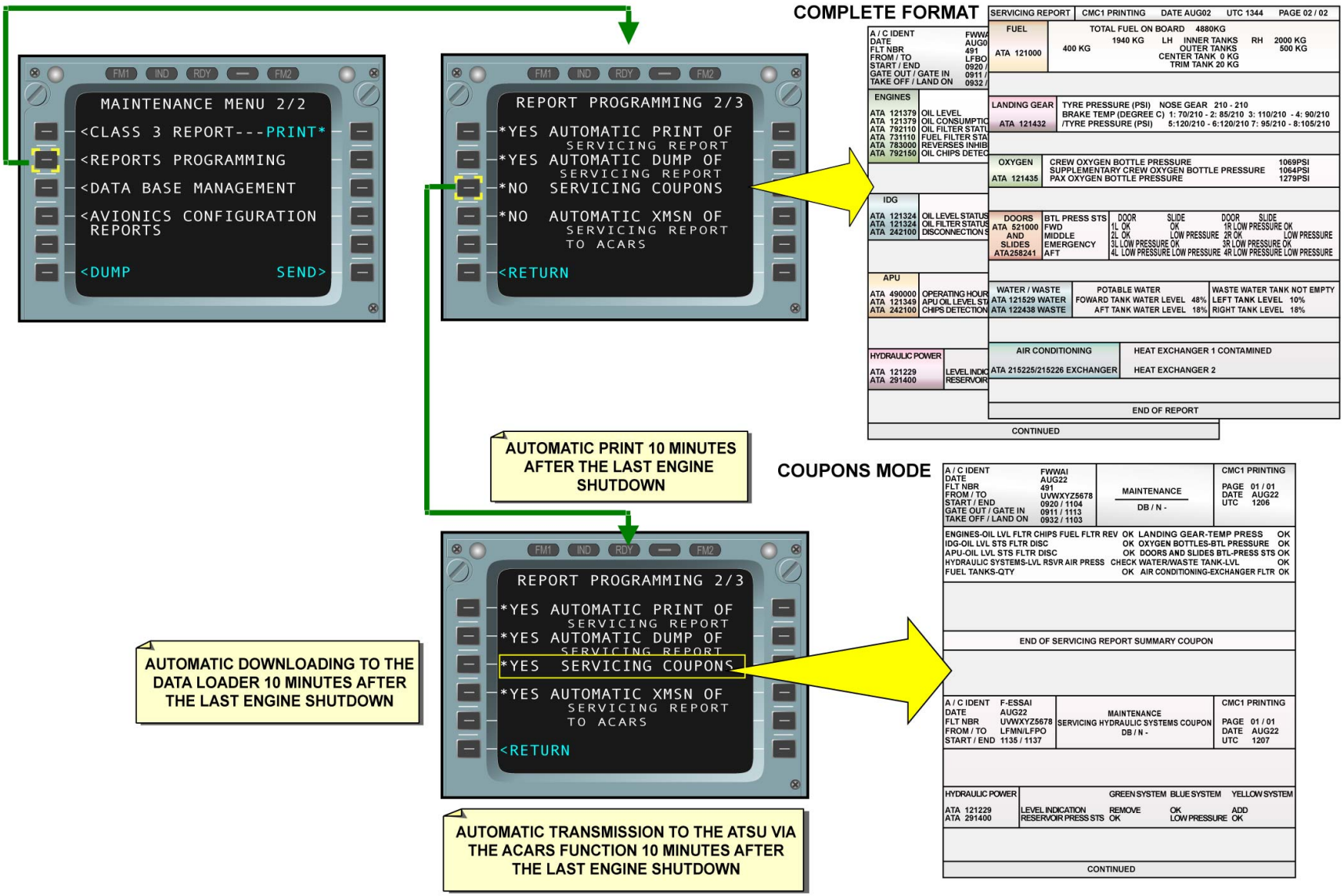

PROGRAMMING

SERVICING REPORT D/O (3)

THRESHOLD AND TEXT INSERTIONS

The airline engineering first needs to define the various thresholds which will be used for the servicing report. The purpose of these thresholds is to automatically trigger a coupon if they are exceeded. The airline can also add comments and information texts between the coupons.
Report threshold and text insertions are made on a personal computer using software called a Maintenance Option Tool (MOT). Then, when this programming is made, it is loaded in the Central Maintenance Computers (CMCs) using the data loader. The servicing report thresholds and information texts database is printed automatically after uploading.
Manual printing of the servicing report thresholds and information texts database can be done through an MCDU menu. The report shown in the next figure is presented as an example.

G7508471 - G3NT1T0 - FM45D4F45SA0202

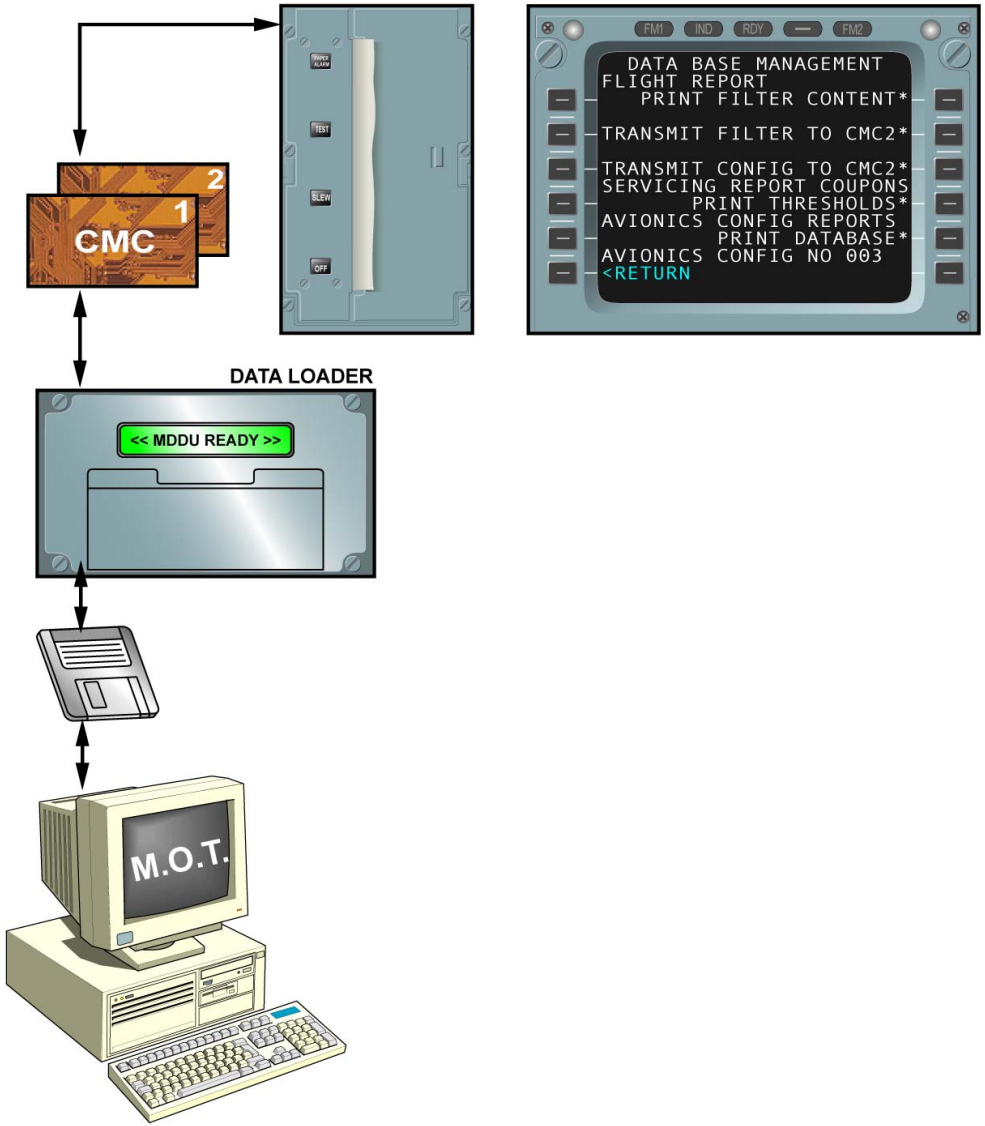

A / C IDENT F-ESSAN
MAINTENANCE
SERVICING REPORT COUPONS THRESHOLDS DATA BASE
DB/N CPA
NOTE: MAXIMUN THRESHOLD IS PRINTED ABOVE
MINIMUN THRESHOLD IS PRINTED BELOW
CMC1 PRINTING
PAGE 02 / 02
DATE AUG02
UTC 1159

A / C IDENT F-ESSAN
MAINTENANCE
SERVICING REPORT COUPONS THRESHOLDS DATA BASE
DB/N CPA
NOTE: MAXIMUN THRESHOLD IS PRINTED ABOVE
MINIMUN THRESHOLD IS PRINTED BELOW
CMC1 PRINTING
PAGE 01 / 02
DATE AUG02
UTC 1159

ENGINES

	ENGINE 1	ENGINE 2	ENGINE 3	ENGINE 4
OIL LEVEL	99.0 QT	99.0 QT	99.0 QT	99.0 QT
	21.0 QT	21.0 QT	21.0 QT	21.0 QT
OIL CONSUMPTION	0.5 QT/HR	0.5 QT/HR	0.5 QT/HR	0.5 QT/HR
	0 QT/HR	0 QT/HR	0 QT/HR	0 QT/HR

UPLOADABLE INFORMATION TEXT

IDG

UPLOADABLE INFORMATION TEXT

APU

OPERATING HOURS 00000 HOURS
0 HOURS
NUMBER OF START CYCLES 00000

UPLOADABLE INFORMATION TEXT

HYDRAULIC POWER

FUEL

TOTAL FUEL ON BOARD 000000 KG
5000 KG
000000 KG LH INNER TANKS RH 000000 KG
0 KG 0 KG
000000 KG OUTER TANKS 000000 KG
0 KG 0 KG
CENTER TANK 000000 KG
0 KG
TRIM TANK 000000 KG
0 KG

UPLOADABLE INFORMATION TEXT

THRESHOLD AND TEXT INSERTIONS

G7508471 - G3NT1T0 - FM45D4F45SA0202

AVIONICS CONFIGURATION REPORTS D/O (3)

GENERAL

The purpose of this function is to present a compilation of CONFIGuration (CONFIG) information of the A/C computer part numbers and software diskettes (also available in the Line Replaceable Unit Identification (LRU IDENT) in each BITE menu). From the Central Maintenance System (CMS) MCDU MENU, the function AVIONICS CONFIG REPORTS enables access to:
- the EQUIPMENT CONFIG REPORT,
- DISKETTES CONFIG REPORT,
- CONFIGURATION CHANGE.

NOTE: Note: this function is only available on ground and if Central Maintenance Computer (CMC) 1 is the master and during the NULL maintenance phase.

G7508471 - G3NT1T0 - FM45D5F45AA0102

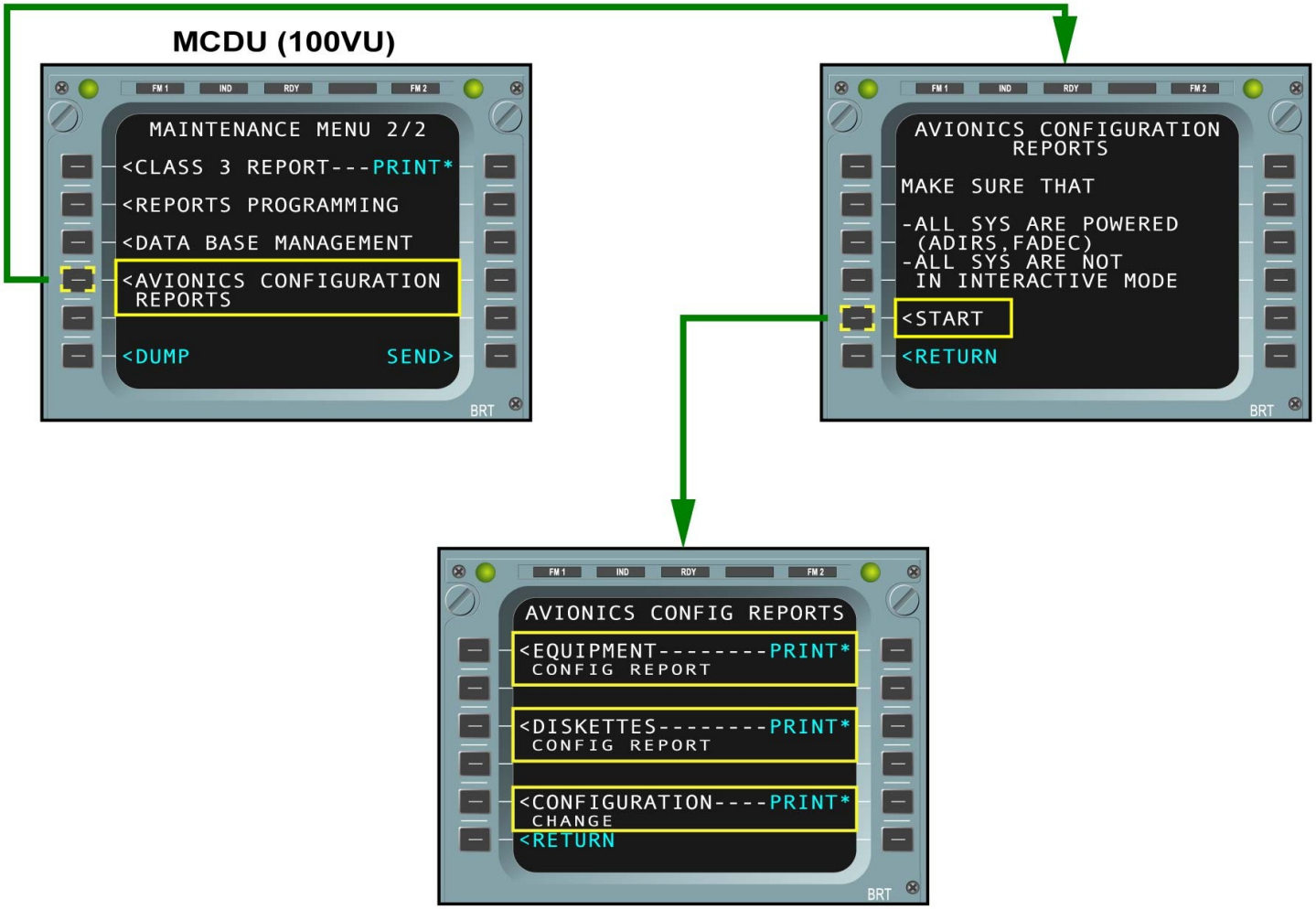
MCDU (100VU)
MAINTENANCE MENU 2/2
<CLASS 3 REPORT---PRINT*
<REPORTS PROGRAMMING
<DATA BASE MANAGEMENT
<AVIONICS CONFIGURATION REPORTS
<DUMP
SEND>
AVIONICS CONFIGURATION REPORTS
MAKE SURE THAT
-ALL SYS ARE POWERED (ADIRS,FADEC)
-ALL SYS ARE NOT IN INTERACTIVE MODE
<START
<RETURN
AVIONICS CONFIG REPORTS
<EQUIPMENT--------PRINT*
CONFIG REPORT
<DISKETTES--------PRINT*
CONFIG REPORT
<CONFIGURATION----PRINT*
CHANGE
<RETURN

GENERAL

AVIONICS CONFIGURATION REPORTS D/O (3)

EQUIPMENT CONFIG REPORT

This report provides the list of computer part numbers and, for some, the serial number and/or the database number.
The part number and serial number are directly read from the computer memory or On Board Replaceable Modules (OBRMs), thus no updating is necessary.
They are displayed on the MCDU or they can be printed.

G7508471 - G3NT1T0 - FM45D5F45AA0102

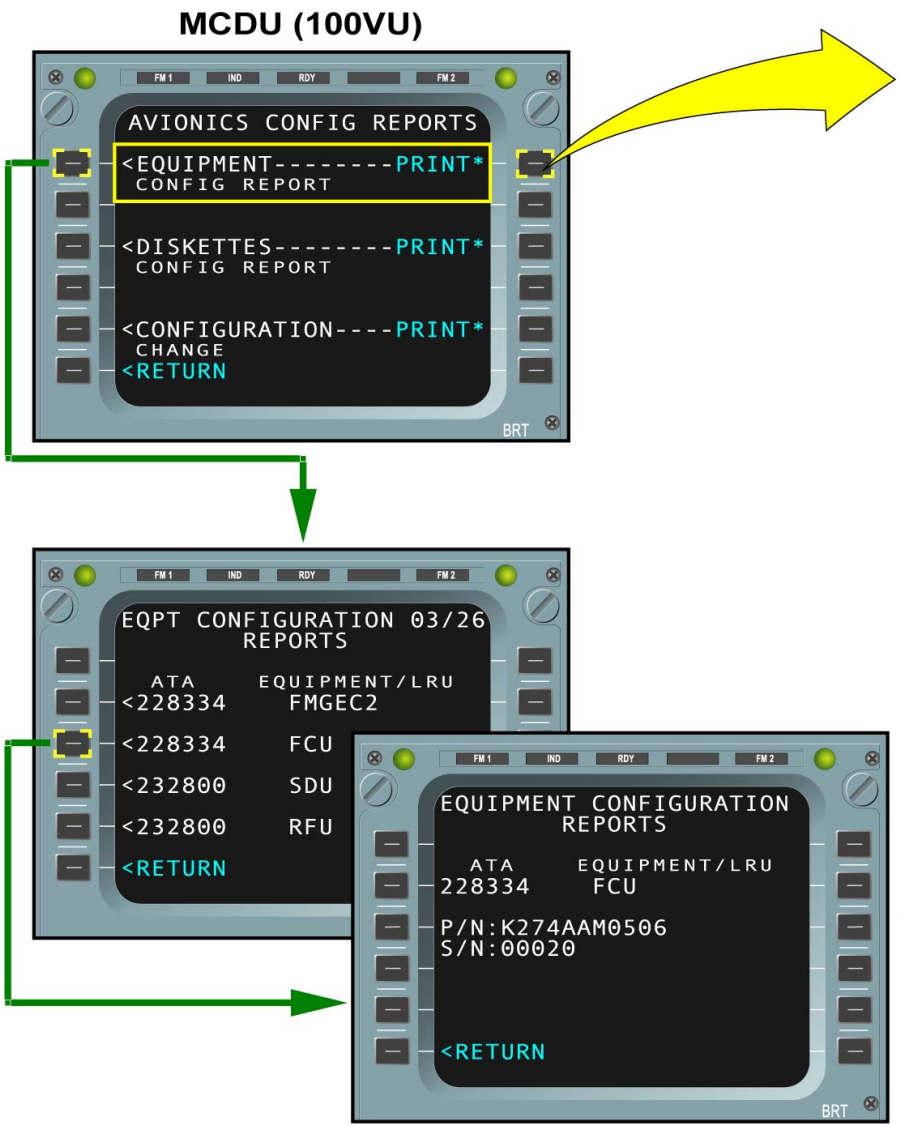

MAINTENANCE
EQUIPMENT CONFIGURATION REPORT

AIRCRAFT IDENTIFICATION FWWAI		PRINTING DATE AUG02 UTC 1347	
ATA 212634	NAME AEVC SYSTEM AEVC	P/N: 785-611-X5 S/N: 0007	
ATA 213134	NAME CPC1 SYSTEM CPC1	P/N: 7125-18086-4	
ATA 213134	NAME CPC2 SYSTEM CPC2	P/N: 7125-18086-4	
ATA 212634	NAME FMGEC1 SYSTEM AFS	P/N: B490AAX0N95 S/N: 0007	DB/N1: 0817
ATA 228334	NAME FCU SYSTEM AFS	P/N: K274AAM0506 S/N: 00020	
ATA 228334	NAME MCDU1 SYSTEM AFS	P/N: K275AAP0202 S/N: 91030131	
ATA 228334	NAME MCDU2 SYSTEM AFS	P/N: K275AAP0202 S/N: 91030129	
ATA 228334	NAME MCDU3 SYSTEM AFS	P/N: K275AAP0202 S/N: 91030141	
ATA 228334	NAME FMGEC2 SYSTEM AFS	P/N: K490AAM0207 S/N: 00023	DB/N1: 0817
ATA 232600	NAME SDU SYSTEM SATCOM	P/N: 7516100-18036 S/N: 0536	DB/N1: S/WM N
ATA 232600	NAME RFU SYSTEM SATCOM	P/N: 7516240-18036 S/N: 95050520	DB/N1: S/WM E
ATA 232600	NAME HPH SYSTEM SATCOM	P/N: 7516250-18036 S/N: 95050695	DB/N1: S/WM C
ATA 232600	NAME ORT SYSTEM SATCOM	P/N: GAF-A340-180 S/N: 95050695	DB/N1: S/WM C
ATA 235134	NAME ACP1 SYSTEM AIS	P/N: 2788AC01	
ATA 235134	NAME ACP2 SYSTEM AIS	P/N: 2788AC01	
ATA 235134	NAME ACP3 SYSTEM AIS	P/N: 2788AC01	
ATA 235134	NAME ACP4 SYSTEM AIS	P/N: 2788AC01	

CONTINUED

EQUIPMENT CONFIG REPORT

AVIONICS CONFIGURATION REPORTS D/O (3)

DISKETTES CONFIG REPORT

On each A/C, a set of floppy disks is available in the cockpit. They contain databases necessary for the operation of some computers. The purpose of this report is to record and check the version of these floppy disks.
The DISKETTES CONFIG REPORT is first defined by the airline engineering using a Maintenance Option Tool (MOT), then loaded in CMC 1. The CMC will keep this report updated because it can read the database numbers directly from the computers.
This report is displayed on the MCDU or can be printed.
Pushing the line key adjacent to avionics CONFIG reports gives you access to the different MCDU screens as presented in the following example.

G7508471 - G3NT1T0 - FM45D5F45AA0102

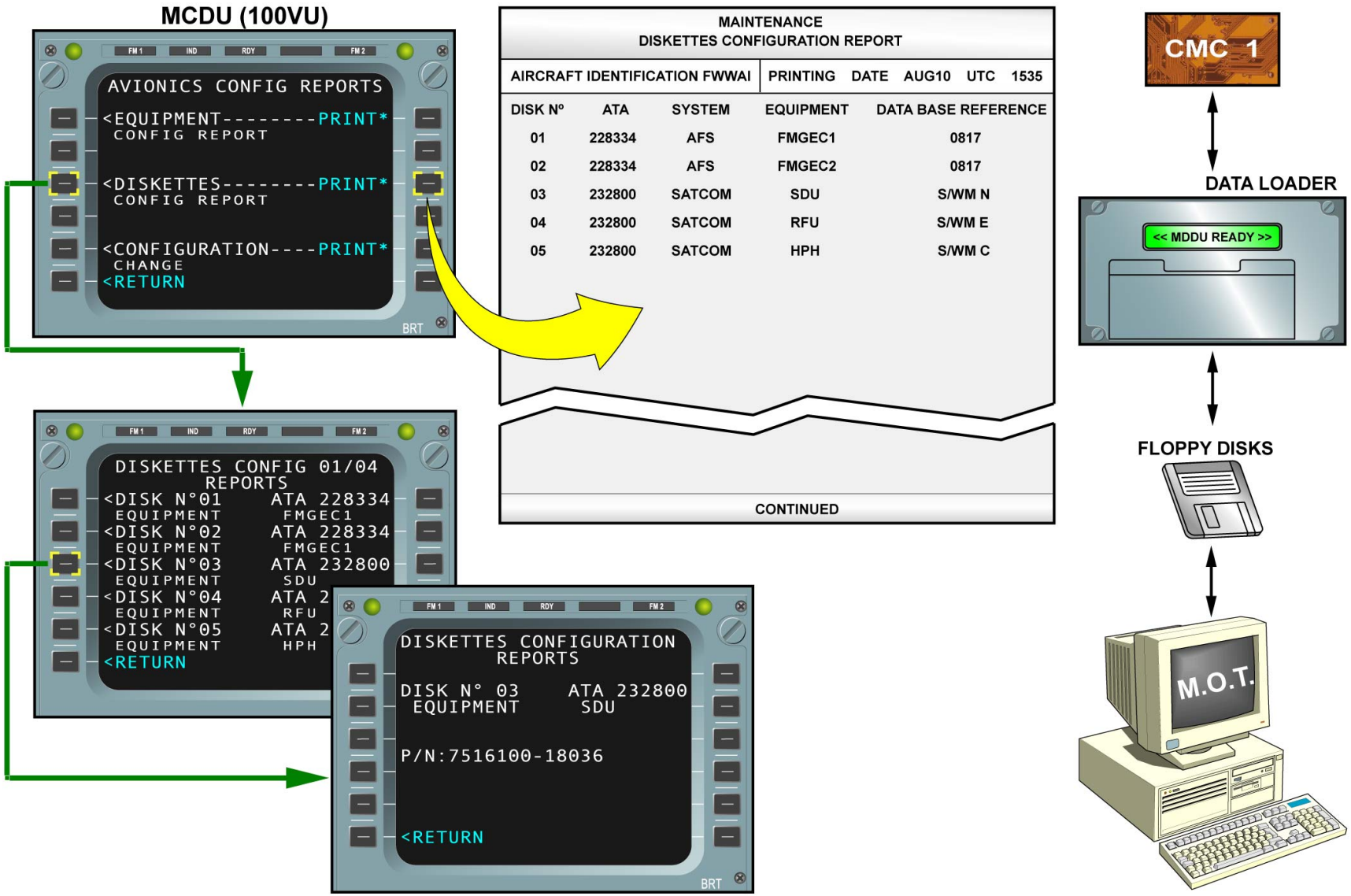

DISKETTES CONFIG REPORT

AVIONICS CONFIGURATION REPORTS D/O (3)

CONFIGURATION CHANGE

This function is designed to validate the part number, database number and software reference changes through the CMS, and is presented on the MCDU only if new part numbers are detected by the CMS.
The philosophy is that, if a person changes a computer (new part number), then the change is checked and validated on the MCDU by another person called the controller. The items of equipment that are listed are those for which the change has not yet been validated. A password will be entered to validate the new part number.
After validation, the equipment disappears from the list. It is still available in the Equipment CONFIG Report.
The CONFIGURATION change report can be printed through the MCDU.
The screens and reports are presented as an example.

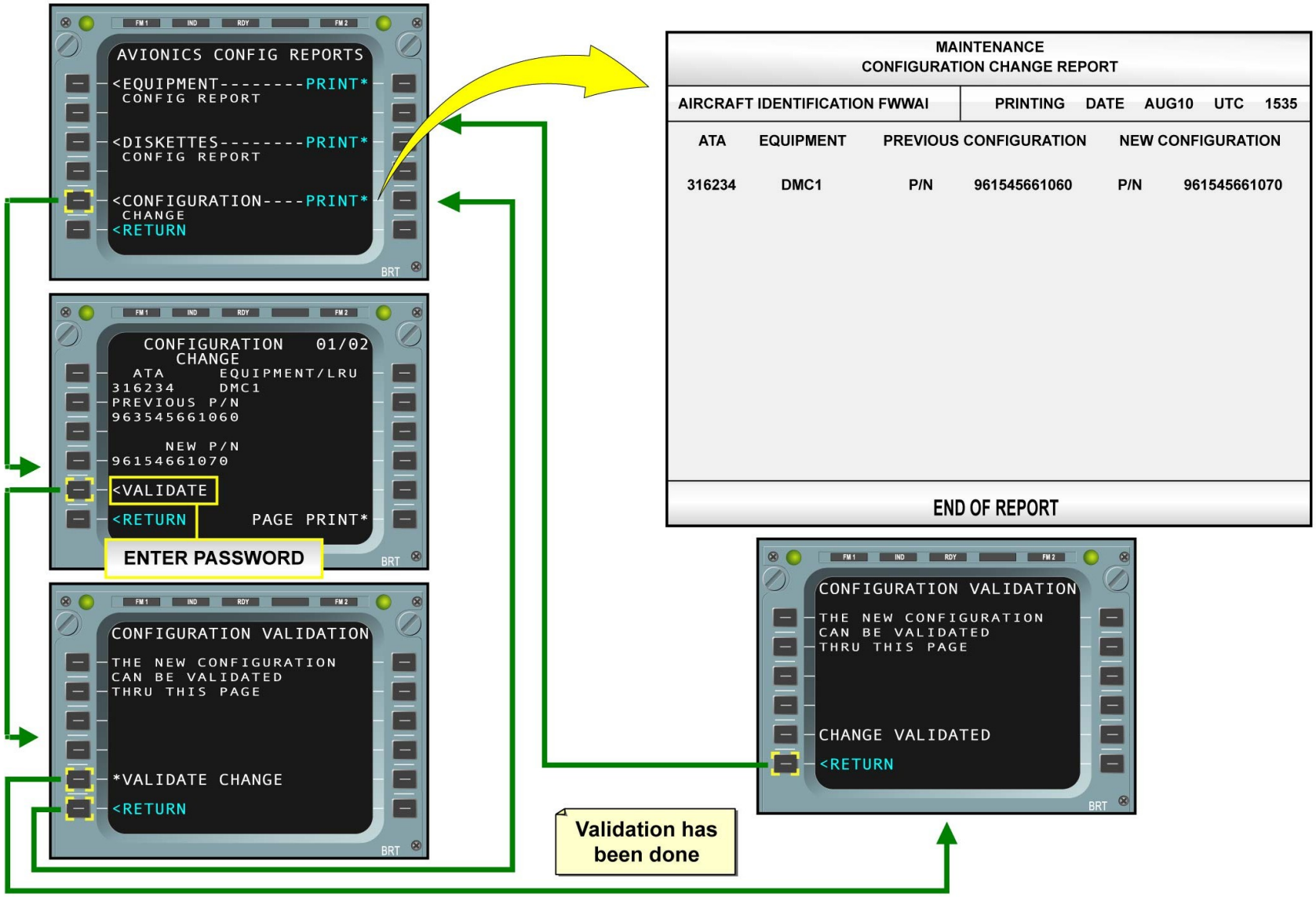

CONFIGURATION CHANGE

G7508471 - G3NT1T0 - FM45D5F45AA0102

AVIONICS CONFIGURATION REPORTS D/O (3)

PROGRAMMING

- manual control from the MCDU,
- automatic transmission from the internal logics (at each new detected CONFIG),
- request from the ACARS function.

It is possible to program the automatic transmission of the CONFIGURATION CHANGE report, to the printer, the Air Traffic Service Unit (ATSU) via the Aircraft Communication Addressing and Reporting System (ACARS) function, or the data loader.

G7508471 - G3NT1T0 - FM45D5F45AA0102

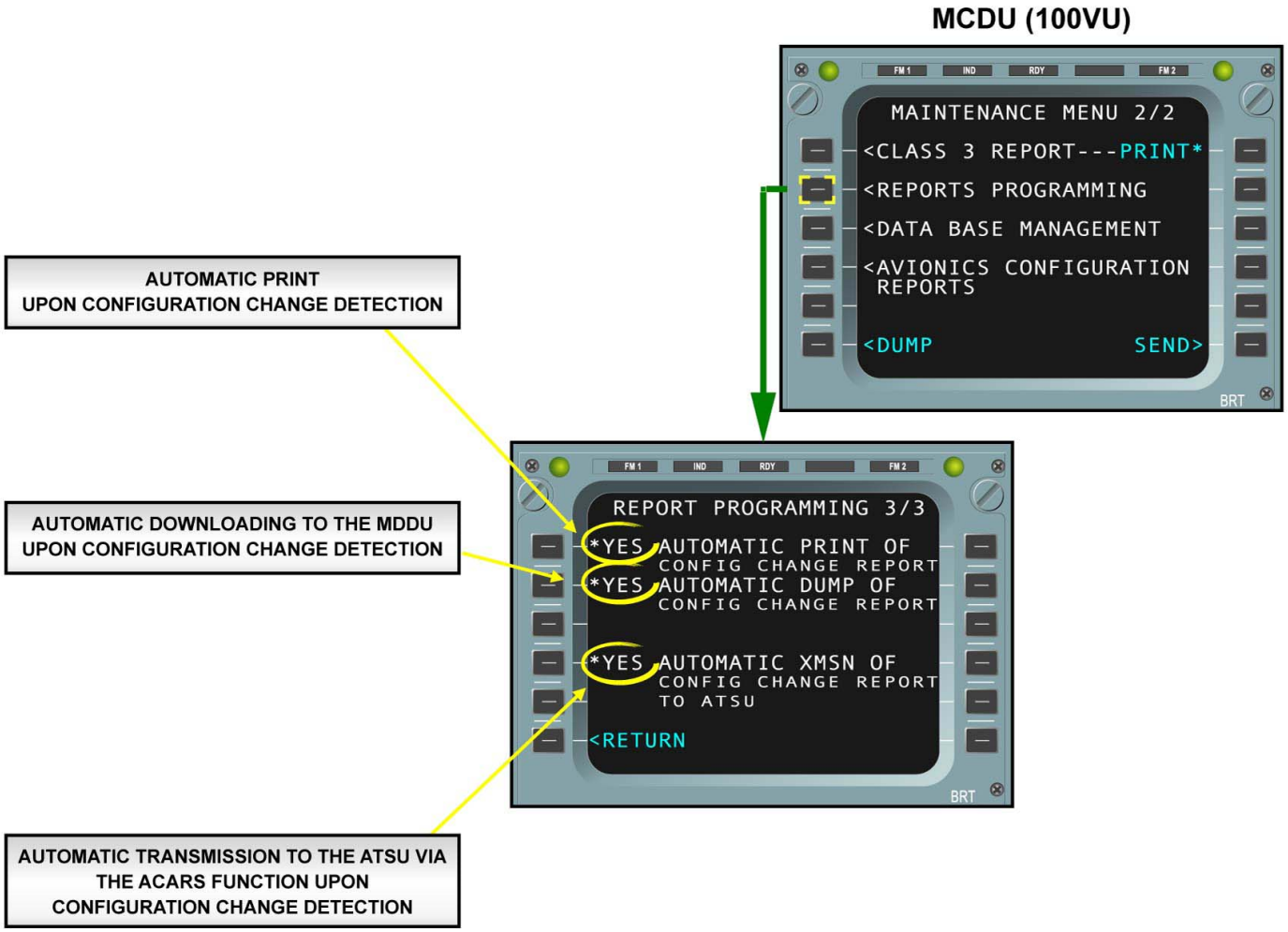

PROGRAMMING

G7508471 - G3NT1T0 - FM45D5F45AA0102

PRINTER D/O (3)

GENERAL

The printer is used for printing system reports. These systems are:
- the Central Maintenance System (CMS),
- the Aircraft Condition Monitoring System (ACMS),
- the Air Traffic and Information Management System (ATIMS),
- the Flight Management Guidance and Envelope System (FMGES),
- the Engine Interface Vibration Monitoring Unit (EIVMU).

It is loaded with an 8.5 inch (216 mm) wide paper roll.

CONTROLS

The printer face features two P/Bs and two annunciator P/Bs. The TEST P/B is used to perform a functional test of the printer.
The SLEW P/B is used to feed the paper out. The PAPER ALARM P/B includes an amber caution light that illuminates if a new paper roll is required. The OFF P/B is used to switch the printer ON or OFF. It includes indicator light bars that illuminate amber if the printer is set to OFF.

G7508471 - G3NT1T0 - FM45D9F45P40302

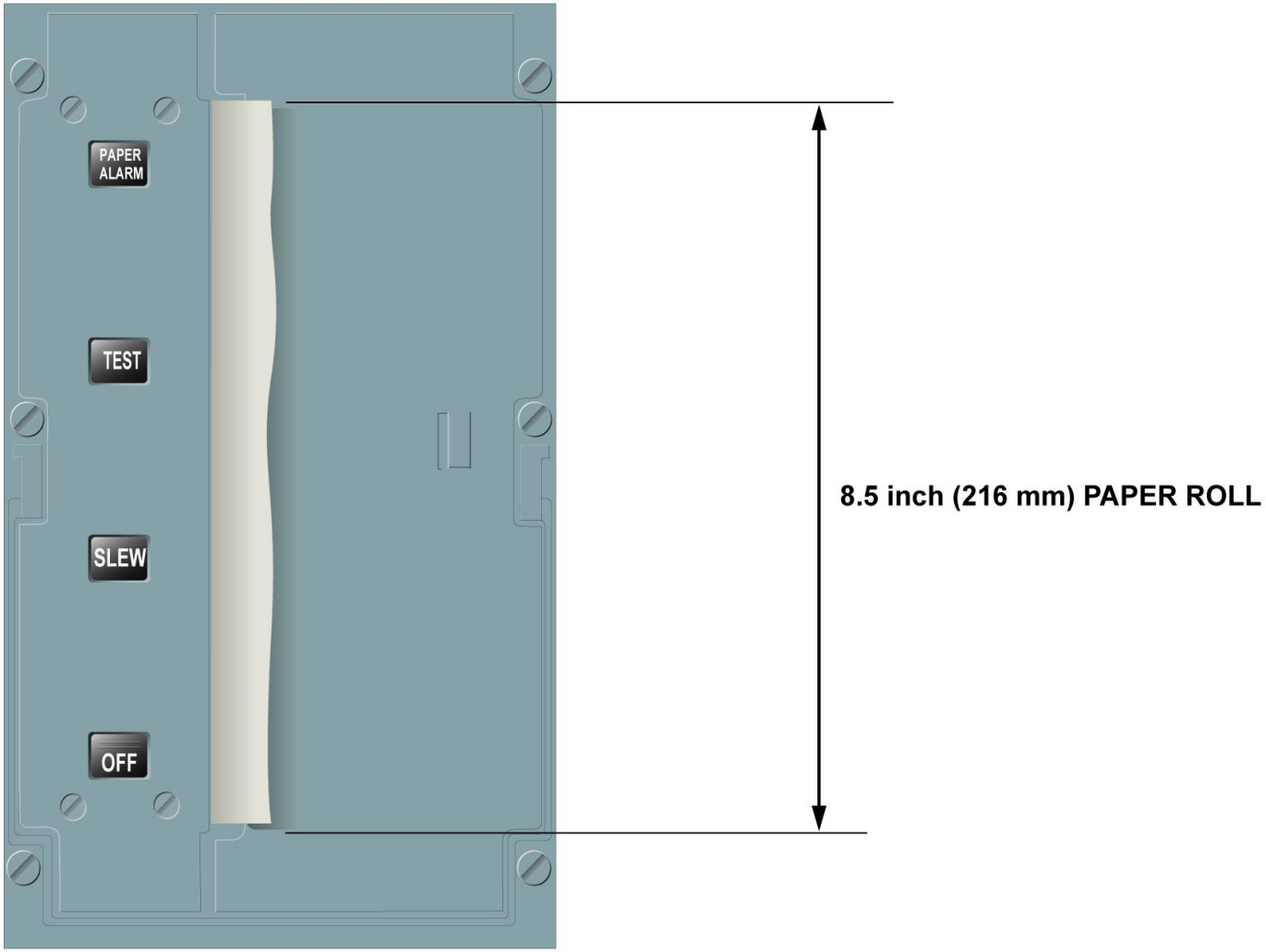

GENERAL & CONTROLS

G7508471 - G3NT1T0 - FM45D9F45P40302

PRINTER D/O (3)

SYSTEMS

Several systems can be connected to the printer, which uses a multiplexed input receiver, so that the printer is in communication with only one of the possible source systems at a time. The input data is transmitted on ARINC 429 buses and is ready to be printed. The output data is transmitted on a single low speed ARINC 429 bus to indicate the printer status (ready, busy, etc).
The printer is usually connected to the following systems:
- the Flight Management Guidance and Envelope Computers (FMGECs),
- the Central Maintenance System (CMS),
- the Engine Interface and Vibration Monitoring Units (EIVMUs),
- the Air Traffic Service Unit (ATSU),
- the Aircraft Condition Monitoring System (ACMS).

FLIGHT MANAGEMENT GUIDANCE AND ENVELOPE COMPUTERS

The FMGECs are connected to the printer so the following types of report can be printed:
- flight plans,
- take-off data,
- wind data (defined in the flight plan),
- flight reports (pre-flight, in-flight, post-flight).

The print function allows various Flight Management (FM) reports to be printed, either automatically or manually.

CENTRAL MAINTENANCE SYSTEM

The CMS is connected to the printer in order to print fault reports for maintenance in flight or on ground. When the last engine is shut down, a Post Flight Report (PFR) may be automatically printed. It is possible to print data displayed on the MCDU by pressing the print line select key.

ENGINE INTERFACE AND VIBRATION MONITORING UNIT

Each EIVMU automatically constitutes a report in case of an excessive vibration level or upon a manual request, before the flight, via the CMS in interactive mode. The report is stored in the EIVMU in a volatile memory. Therefore it may be lost before printing in case of a power supply interruption. The report is printed on ground as soon as the engine shuts down. The MCDU page is accessed from the MCDU EIVMU main menu page and allows FREQUENCY ANALYSIS ACQUISITION REQUESTS. When all the values are correctly entered the request is validated, by pressing on the RETURN key.

AIR TRAFFIC SERVICE UNIT

The ATSU is connected to the printer in order to print the data elaborated by itself received from the ground and from peripheral computers, and the data entered by the crew via the MCDUs.

AIRCRAFT CONDITION MONITORING SYSTEM

The ACMS collects data from A/C systems and formats it to suit various standard reports, which can be printed. The ACMS report prints can be done manually via the MCDU or automatically. Depending on programming, some reports can be triggered and then printed by the remote ACMS PRINT P/B.

G7508471 - G3NT1T0 - FM45D9F45P40302

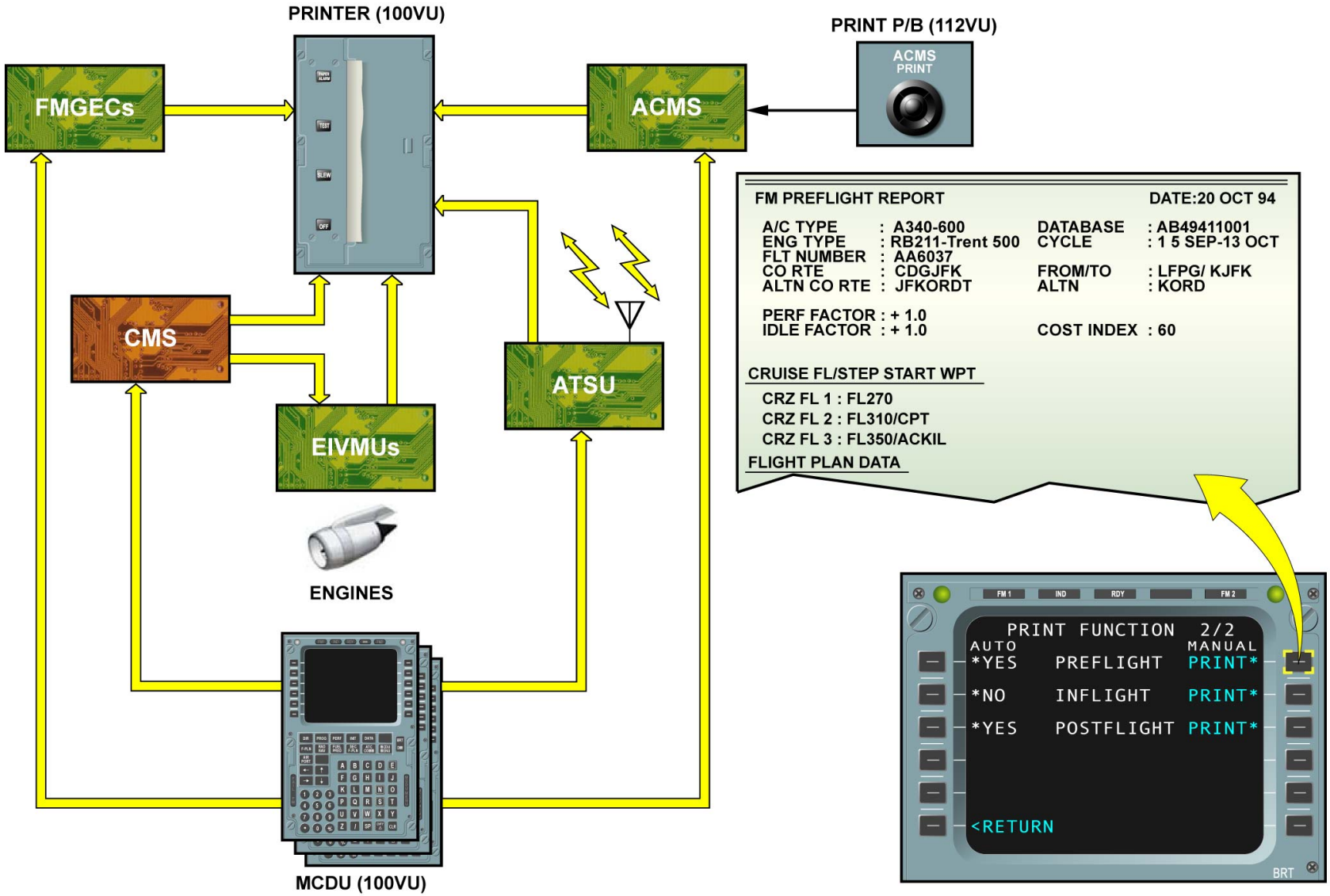

SYSTEMS ... AIRCRAFT CONDITION MONITORING SYSTEM

UP AND DOWN LOADING D/O (3)

GENERAL

The Data loading system includes:
- a Data Loading Selector (DLS) located on the overhead panel to select the target computer,
- a Multipurpose Disk Drive Unit (MDDU) to upload and download data from or to a disk unit,
- a Data Loading Routing Box (DLRB) to route the input/output data between the disk unit and the target computer.

Note: if the MDDU is not installed, up and down loading functions can be performed through a connector by using a Portable Data Loader (PDL).
The up and down data loading system is defined as an interface between the onboard computers and the ground-based data processing stations (PCs). The system has two functions, a main uploading function and a downloading function. From a data processing media (3.5 inch disk), the onboard computers use the uploading function to update their databases or to modify part of their operational software (no On Board Replaceable Module (OBRM) on the front face of the computers).
The downloading function is used to transfer the data recorded by certain computers during aircraft operation to a 3.5 inch disk. This disk-stored data can be directly analyzed on ground by the airlines.
Note that all the computers involved in the system use the uploading function. Only a limited number also use the downloading function.
The Multipurpose Disk Drive Unit (MDDU), the onboard data loader and the onboard computers known as target computers communicate via ARINC 429 data buses. Loading operation is basically controlled by the Data Loading Routing Box (DLRB) by means of the Data Loading Selector (DLS).

Data Loading Selector (DLS)

Multipurpose Disk Drive Unit (MDDU)

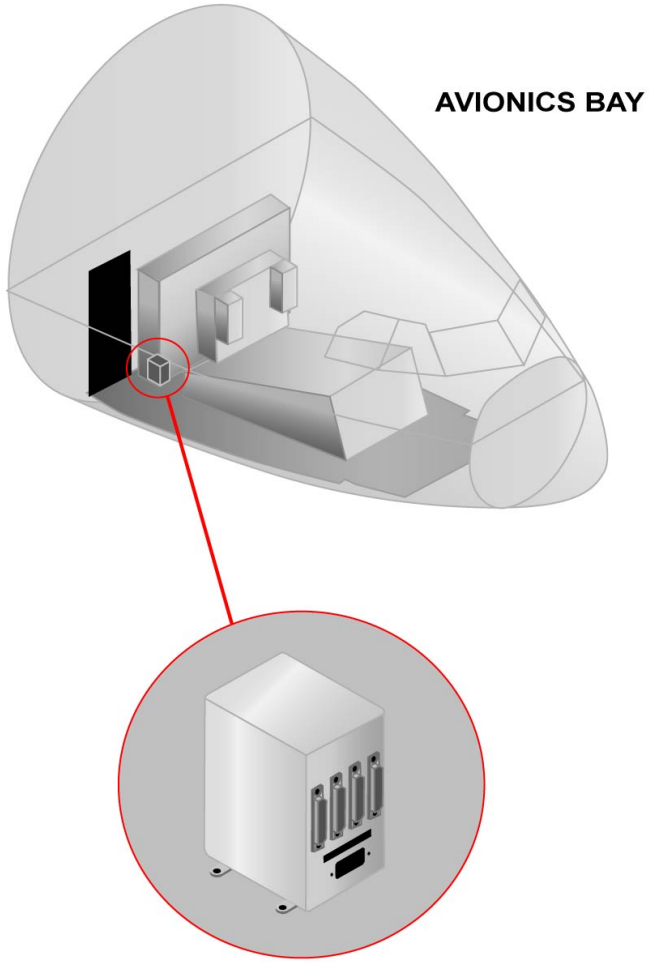

Data Loading Routing Box (DLRB)

GENERAL

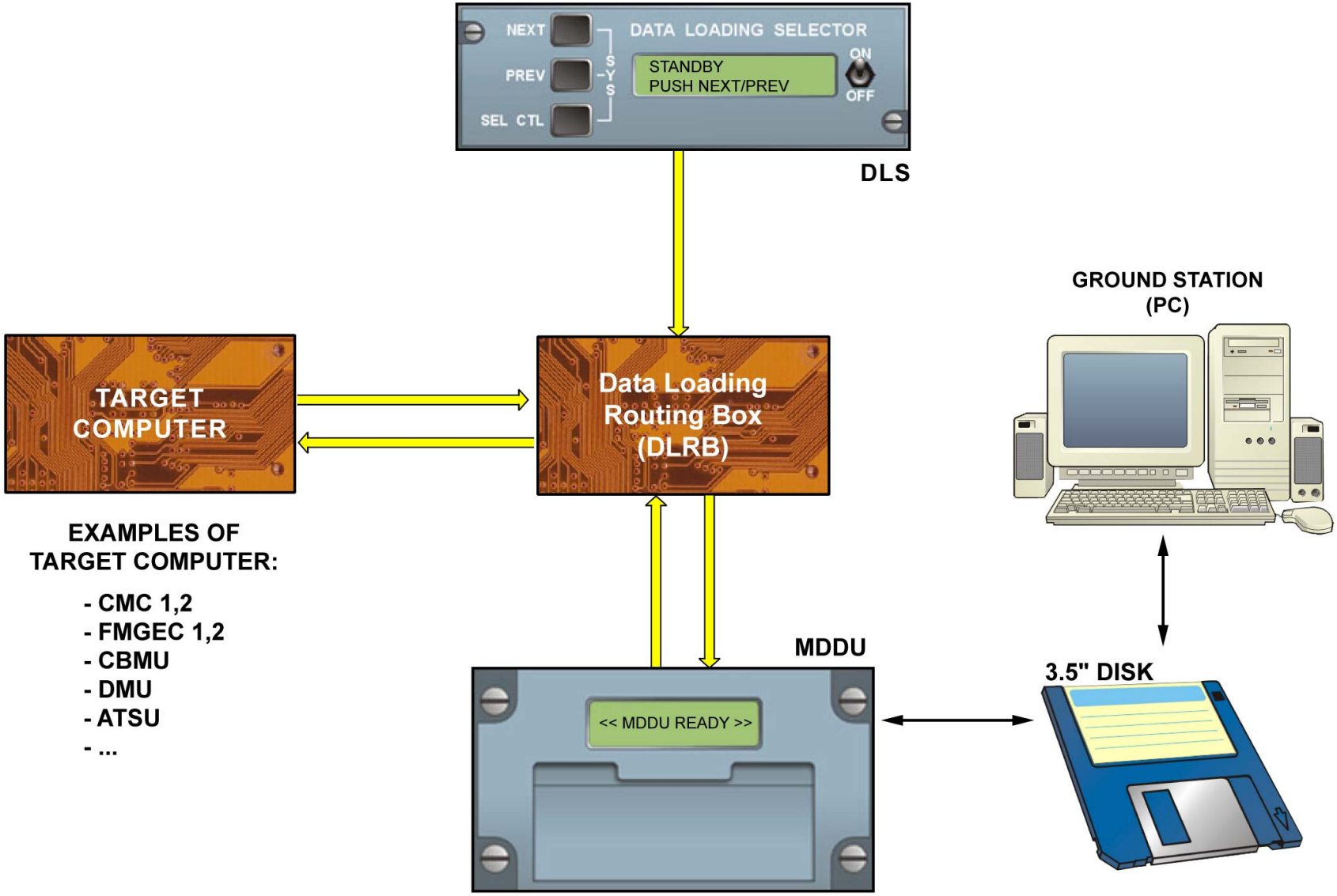
NEXT
PREV
SEL CTL
SYS
DATA LOADING SELECTOR
STANDBY
PUSH NEXT/PREV
ON
OFF
DLS
GROUND STATION
(PC)
TARGET
COMPUTER
Data Loading
Routing Box
(DLRB)
EXAMPLES OF
TARGET COMPUTER:
- CMC 1,2
- FMGEC 1,2
- CBMU
- DMU
- ATSU
- ...
MDDU
<< MDDU READY >>
3.5" DISK

GENERAL

This Page Intentionally Left Blank

G7508471 - G3NT1T0 - FM45DALOADGDO02

UP AND DOWN LOADING D/O (3)

SYSTEM DESCRIPTION

The Data Loading system is an interface between the aircraft computers and ground data processing equipment used to update software and databases or to retrieve aircraft system data.

DLRB/DLS

The DLRB and the DLS are connected by two RS422 bi-directional serial links (for dialog and maintenance purposes) and two discretes. The DLS sends user commands to the DLRB and displays the result of these commands on its Liquid Crystal Display (LCD) screen. The list of the computers displayed on the DLS is extracted from the DLRB database. This database must be uploaded to fit the aircraft configuration (by selecting the DLRB itself in the list of targets).
The DLRB and the DLS only operate in ground condition. When the right hand main landing gear shock absorber is compressed, a discrete signal is sent by the Landing Gear Control and Interface Unit 1 (LGCIU 1) to enable the systems to operate. Note that the DLS ON/OFF selector switch is used to activate the DLRB through the ON/OFF discrete and not to command the DLS power supply. The DLS power is supplied by the DLRB through the POWER SUPPLY discrete.

LOAD ENABLE

A LOAD ENABLE discrete, depending on the state of the LGCIU 1 discrete signal, is wired to each target computer to enable the loading functions on ground and inhibit them in flight.

TARGET COMPUTERS

The target computers can be separated into two groups. Most of the computers (up to 26) belong to the first group. These computers are connected to the DLRB by two ARINC 429 buses. The DLRB routes the data to be transferred between the MDDU and the computer selected on the pull-down menu of the DLS.

The three computers belonging to the second group have direct ARINC 429 links with the MDDU. In addition, these computers are internally programmed so that they will not consider the LOAD ENABLE discrete signal for downloading operations. As a consequence, for the computers of the second group, the downloading function is also operational in flight.
The FDIMU computer belonging to the second group has discret and one direct ARINC 429 links with the DLRB in order to permit future upload of DFRS part of FDIMU via DLRB.

SYSTEM TYPES

The DLRB/DLS is a type 3 system. Note that the DLS BITE is first processed by the DLRB (via RS422). The MDDU is a type 2 system with the following particularity: instead of a discrete, from the Central Maintenance Computer (CMC) to MDDU, an ARINC 429 bus is required for downloading operations, which is also used by the CMC to activate the MDDU test.

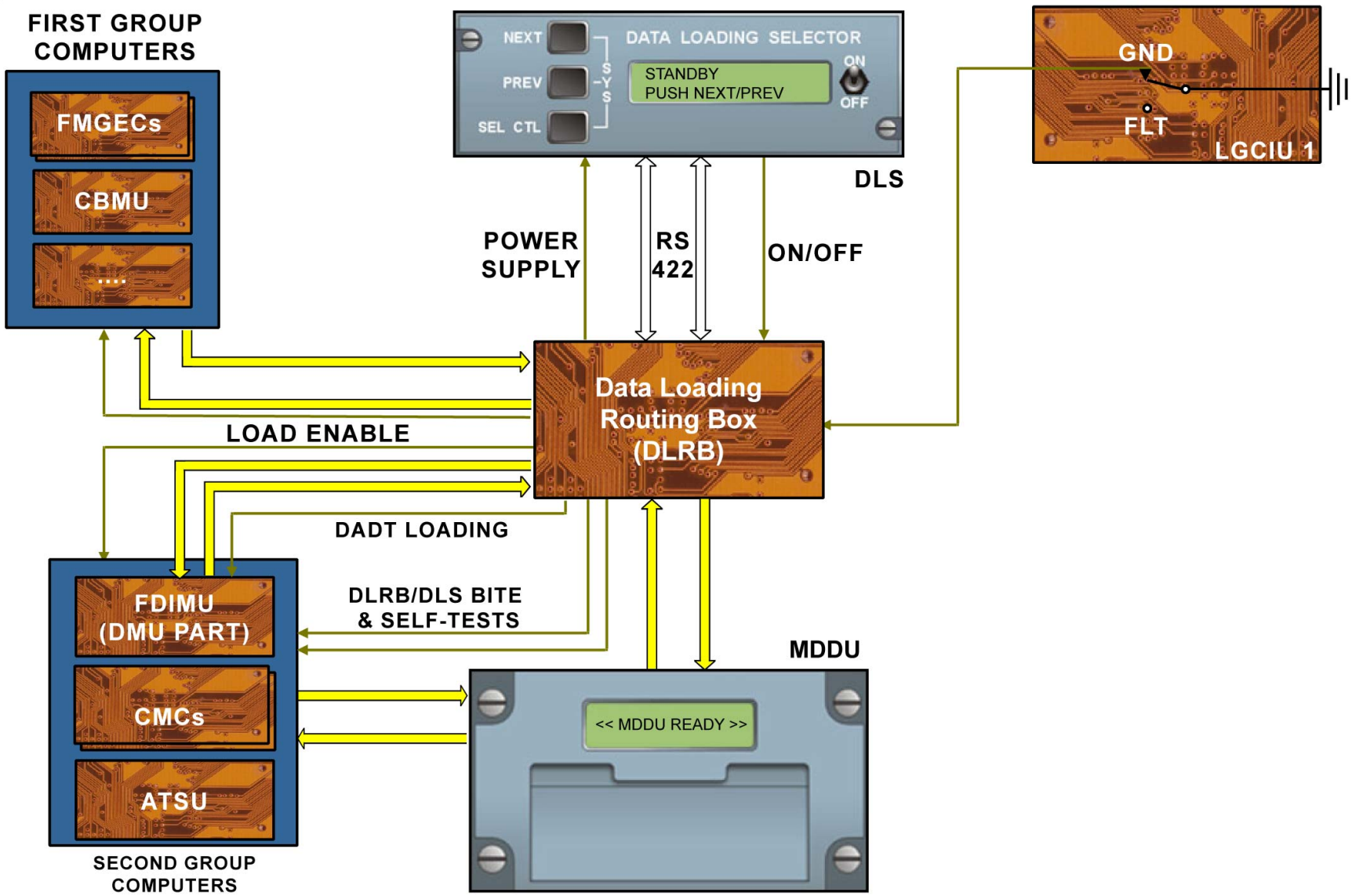

SYSTEM DESCRIPTION - DLRB/DLS ... SYSTEM TYPES

G7508471 - G3NT1T0 - FM45DALOADGDO02

UP AND DOWN LOADING D/O (3)

SEMI-AUTOMATIC LOADING OPERATION

The semi-automatic loading mode is used, on ground only, for either uploading or downloading operations. Before performing a semi-automatic loading operation, refer to the relevant procedure for the corresponding system in the Aircraft Maintenance Manual (AMM). The operator actions are limited to:
- first, selecting the target computer on the pull-down menu of the DLS (e.g. FMGEC 1 for NAV database uploading),
- then, inserting in the disk drive the relevant disk containing the configuration file in which the data to be transferred is defined.

1) Until the disk is inserted in the drive, the system is in standby and the "<< MDDU READY >>" message is displayed on the MDDU. Once the disk is inserted, several automatic actions occur with associated MDDU messages.
2) The MDDU is activated and reads the configuration file ("READY" message).
3) The MDDU processes the information contained in the configuration file and a bi-directional protocol dialog is initiated through the ARINC 429 buses between the MDDU and the target computer ("WAIT RESPONSE" message).
4) As soon as the dialog is established, the data is transferred ("TRANSF IN PROG" message).
5) When the data transfer is terminated and no anomalies are detected, the "TRANSF COMPLETE" message is displayed to inform the operator that the transfer is successfully completed.

Then, in case of uploading, the operator has to check on the relevant MCDU page that the reference of the uploaded software corresponds to the software reference of the disk used for uploading. Note that, for semi-automatic downloading, quick and automatic uploading is first performed to configure the target computer before downloading. That is the reason why, whatever the target computer is, semi-automatic downloading is never possible in flight.

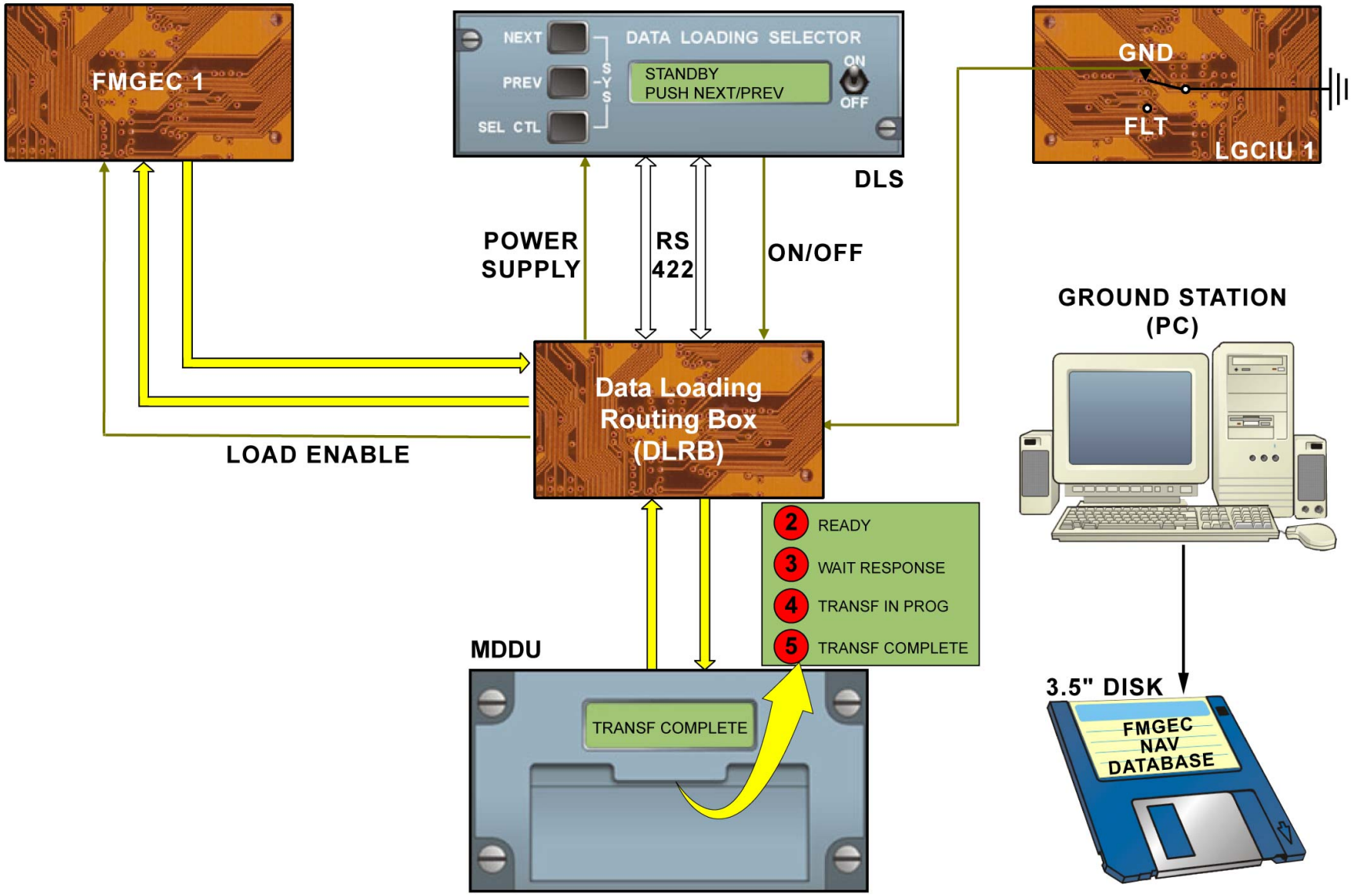

SEMI-AUTOMATIC LOADING OPERATION

G7508471 - G3NT1T0 - FM45DALOADGDO02

UP AND DOWN LOADING D/O (3)

MANUAL LOADING OPERATION

The manual loading mode is only used, either on ground or in flight, for specific downloading operations e.g. POST FLIGHT REPORT DUMP from the CMCs or Smart ACMS Recorder (SAR) unload from the Data Management Unit (DMU) part of the Flight Data Interface and Management Unit (FDIMU). A manual downloading operation differs from a semi-automatic downloading operation by the two following main points:
- no selection is made from the DLS and the data to be transferred is manually selected on the relevant MCDU page,
- the configuration file contained in the inserted disk only defines the label of the target computer. Note that, in case of an empty or unformatted disk, downloading is nevertheless possible following a successful identification procedure between the MDDU and the target computer.

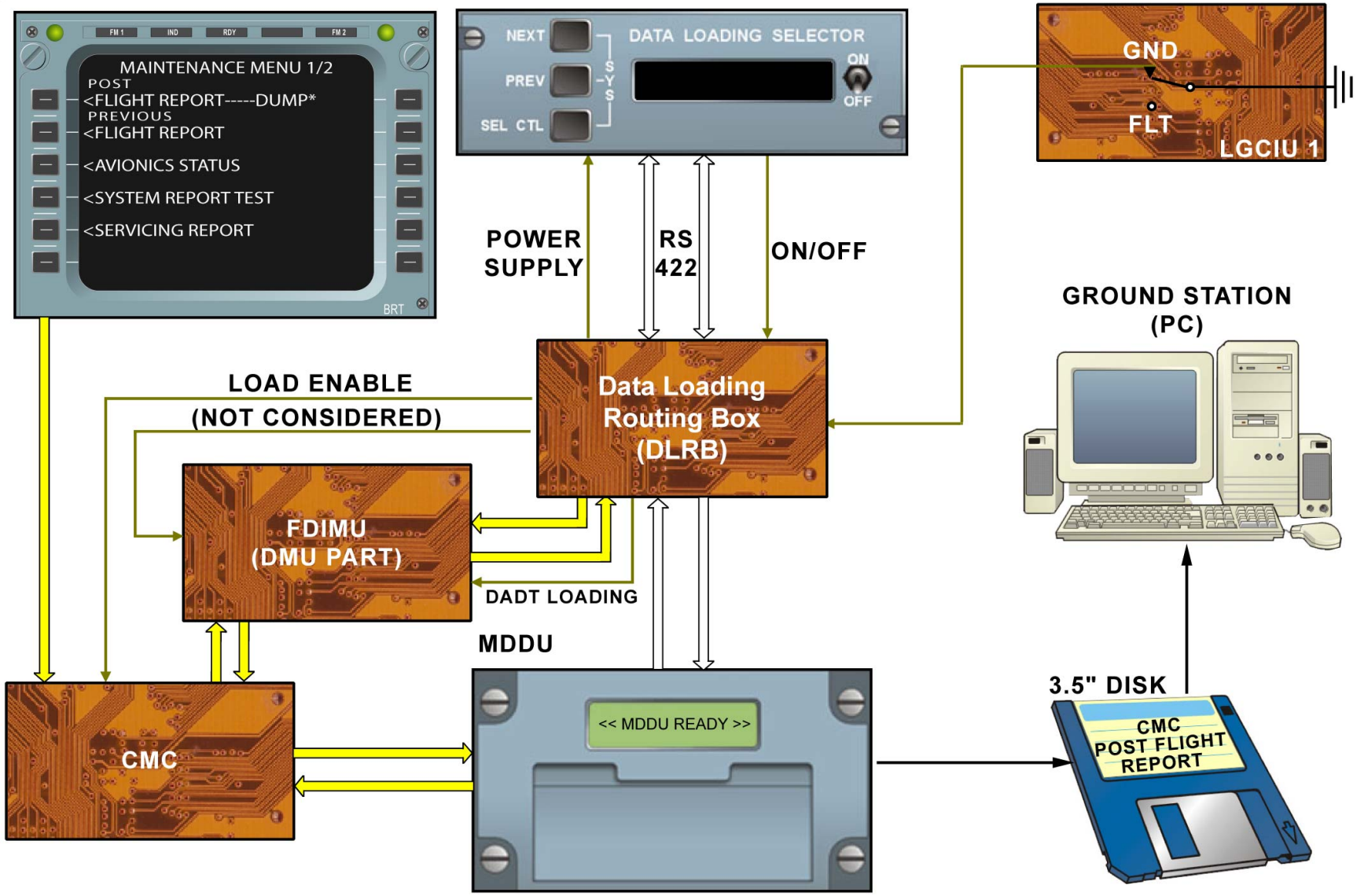

MANUAL LOADING OPERATION

G7508471 - G3NT1T0 - FM45DALOADGDO02

ONBOARD MAINTENANCE SYSTEMS BASE MAINTENANCE (3)

GENERAL

The Onboard Maintenance System (OMS), beside its basic functions, provides the maintenance operator with a compilation of Line Replaceable Unit (LRU) P/N, Data Base (DB) numbers and, software references (REF) installed on the A/C, called avionics configuration DB.
On the A/C, when one of these LRUs, software or DB is changed or updated, the Central Maintenance System (CMS) detects this new configuration, thanks to the avionics configuration DB. It displays it through an onboard printed coupon. Then the avionics configuration DB may be updated and validated through the following task.

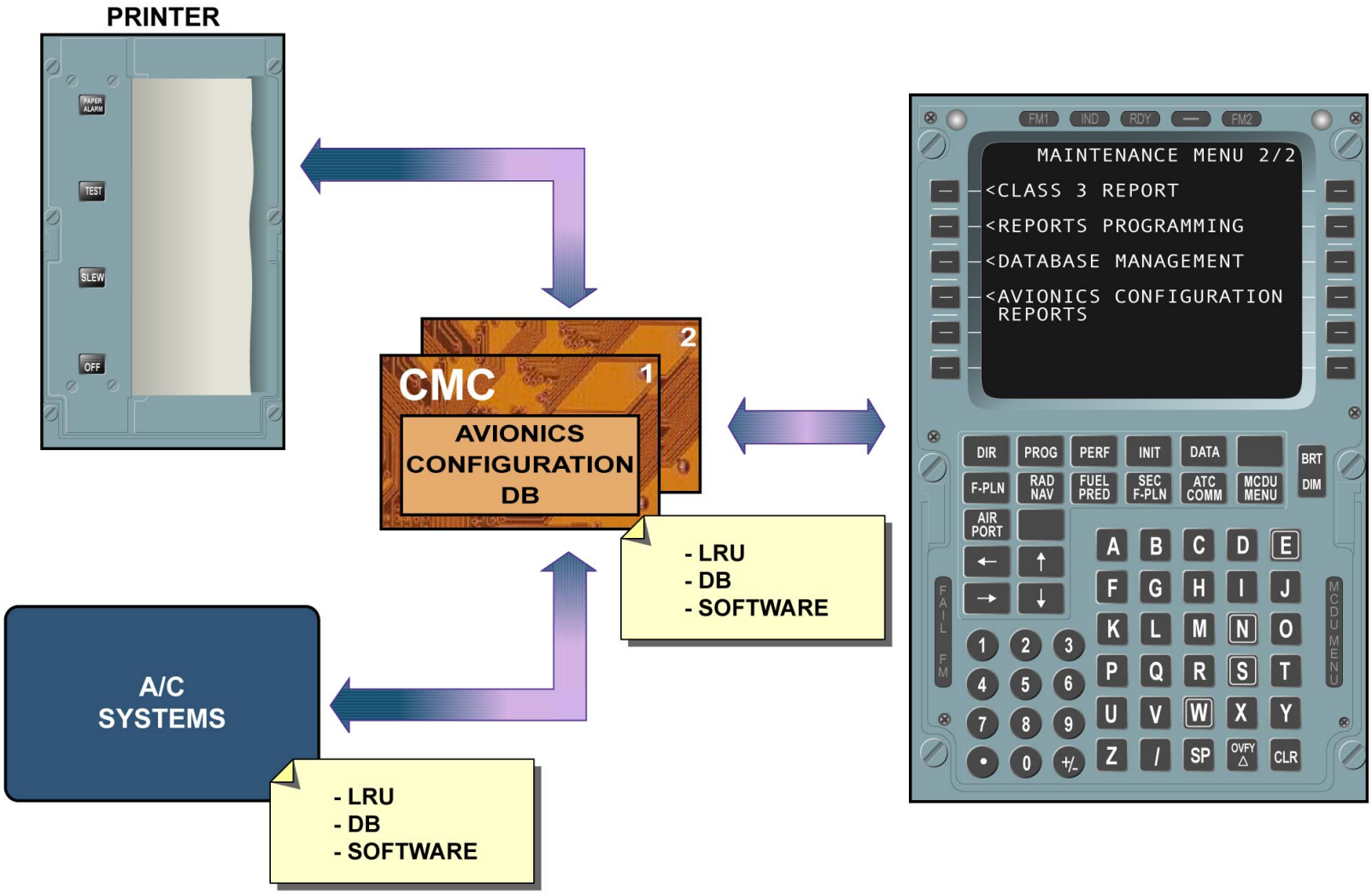
PRINTER
PAPER ALARM
TEST
SLEW
OFF
CMC
2
1
AVIONICS CONFIGURATION DB
- LRU
- DB
- SOFTWARE
A/C SYSTEMS
- LRU
- DB
- SOFTWARE
FM1
IND
RDY
FM2
MAINTENANCE MENU 2/2
<CLASS 3 REPORT
<REPORTS PROGRAMMING
<DATABASE MANAGEMENT
<AVIONICS CONFIGURATION REPORTS
DIR
PROG
PERF
INIT
DATA
BRT
DIM
F-PLN
RAD NAV
FUEL PRED
SEC F-PLN
ATC COMM
MCDU MENU
AIR PORT
FAIL FM
MCDU MENU
SP
OVFY
CLR

GENERAL

ONBOARD MAINTENANCE SYSTEMS BASE MAINTENANCE (3)

VALIDATION OF AN AVIONICS CONFIGURATION CHANGE

From the second page of the MAINTENANCE MENU access the AVIONICS CONFIGURATION REPORTS page.

NOTE: The validation of the avionics configuration change is done in the active Central Maintenance Computer (CMC) only. There is no automatic validation transmission to the slave CMC.

Pushing the START key launches the CMC AVIONICS CONFIGURATION REPORTS construction.

NOTE: Make sure that all systems are powered and not in interactive mode, to allow the active CMC to check the actual avionics configuration.

Push the CONFIGURATION CHANGE key to access to the corresponding page.

NOTE: This line is displayed only if the active CMC has detected a configuration change.

The CONFIGURATION CHANGE page(s) show(s) all changes detected by the active CMC, one change per page. The VALIDATE key will validate the LRU change displayed on the page. This key is protected by a passcode.

Switch off the two other MCDUs and enter the access code "XXX" on the scratchpad to be able to validate the change.

Push the VALIDATE key to access the CONFIGURATION VALIDATION page.

Push the VALIDATE CHANGE key and check for confirmation.

You can now transmit to the slave CMC, the active CMC as memorized the avionics configuration DB. This allows you to use the slave CMC in case of active CMC failure.

Put the aircraft back into its initial configuration.

Validation of an AVIONICS CONFIGURATION CHANGE

...

Job set-up

...

Make sure that the OFF legend of the CMC 1 p/bsw is off.

...

Procedure

...

Access to the CONFIGURATION CHANGE page.

Validate the configuration changes.

If you want to use the CMC 2 ...

...

Close-up

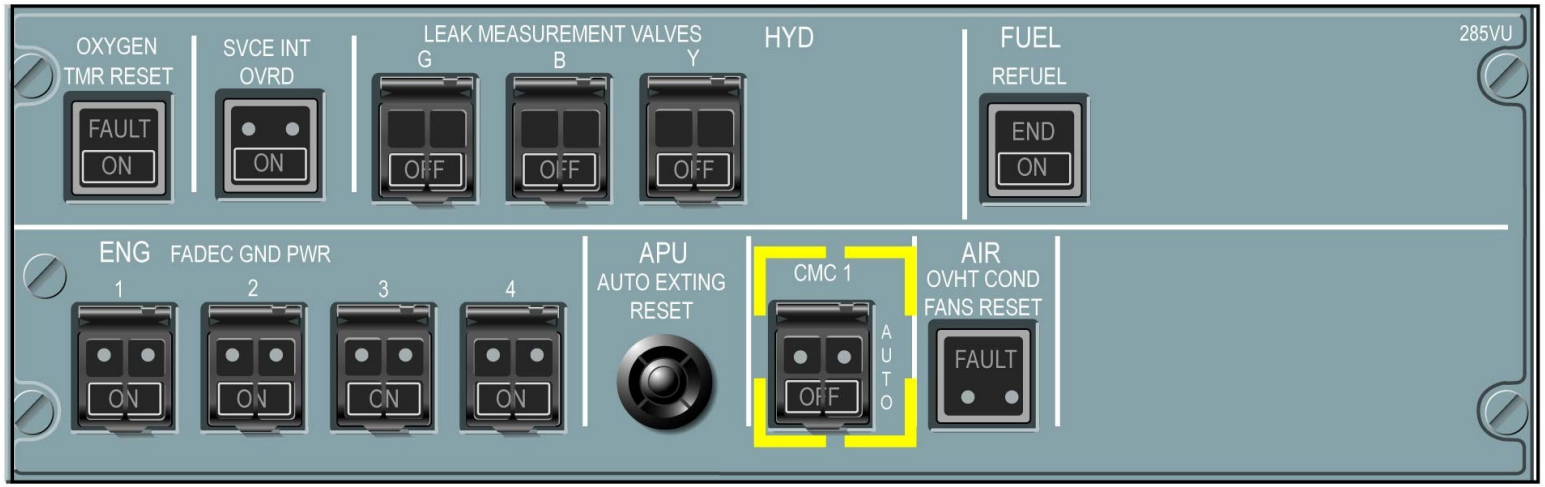

MAINTENANCE PANEL
(285 VU)

VALIDATION OF AN AVIONICS CONFIGURATION CHANGE

G7508471 - G3NT1T0 - FM45Y2BASEMCE02

Validation of an AVIONICS CONFIGURATION CHANGE

...

Job set-up

...

Make sure that the OFF legend of the CMC 1 p/bsw is off.

...

Procedure

...

Access to the CONFIGURATION CHANGE page.

The MAINTENANCE MENU 2/2 page comes into view.
Push the key adjacent to the AVIONICS CONFIGURATION REPORTS indication.
Push the key adjacent to the START indication.
Push the key adjacent to the CONFIGURATION CHANGE indication.

Validate the configuration changes.

If you want to use the CMC 2 ...

...

Close-up

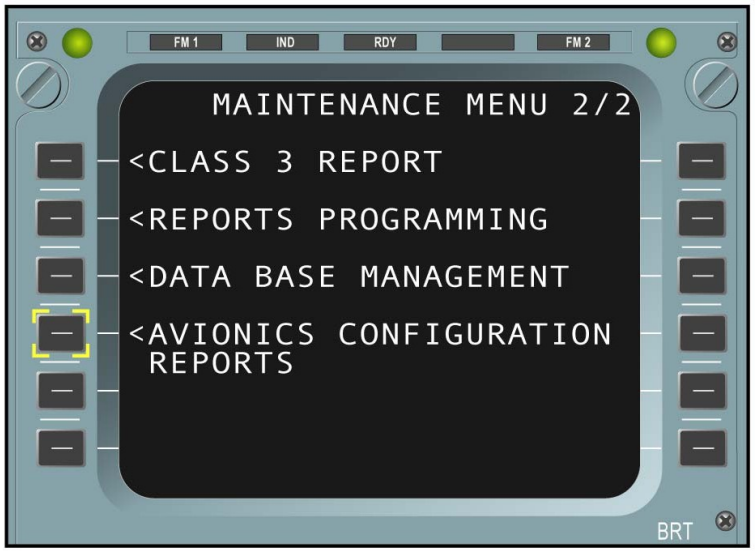

VALIDATION OF AN AVIONICS CONFIGURATION CHANGE

G7508471 - G3NT1T0 - FM45Y2BASEMCE02

Validation of an AVIONICS CONFIGURATION CHANGE

...

Job set-up

...

Make sure that the OFF legend of the CMC 1 p/bsw is off.

...

Procedure

...

Access to the CONFIGURATION CHANGE page.
The MAINTENANCE MENU 2/2 page comes into view.
Push the key adjacent to the AVIONICS CONFIGURATION REPORTS indication.
Push the key adjacent to the START indication.
Push the key adjacent to the CONFIGURATION CHANGE indication.

Validate the configuration changes.

If you want to use the CMC 2 ...

...

Close-up

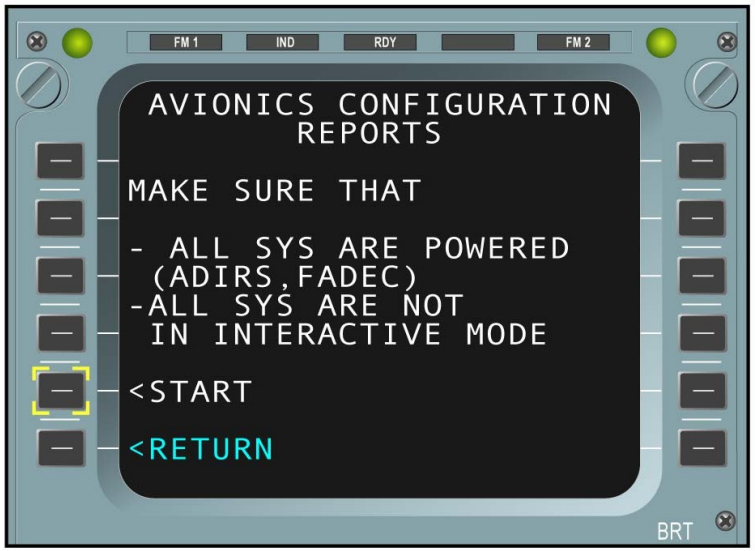

VALIDATION OF AN AVIONICS CONFIGURATION CHANGE

Validation of an AVIONICS CONFIGURATION CHANGE

...

Job set-up

...

Make sure that the OFF legend of the CMC 1 p/bsw is off.

...

Procedure

...

Access to the CONFIGURATION CHANGE page.
The MAINTENANCE MENU 2/2 page comes into view.
Push the key adjacent to the AVIONICS CONFIGURATION REPORTS indication.
Push the key adjacent to the START indication.
Push the key adjacent to the CONFIGURATION CHANGE indication.

Validate the configuration changes.

If you want to use the CMC 2 ...

...

Close-up

The line is displayed only if the active CMC has detected a configuration change

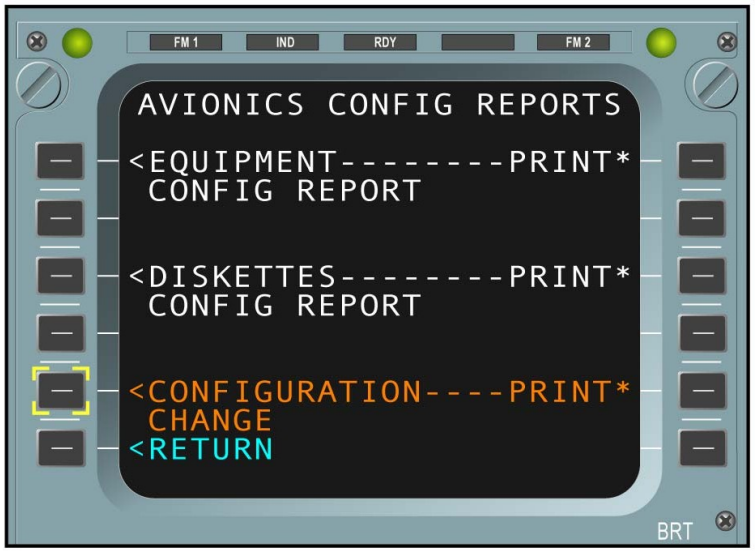

VALIDATION OF AN AVIONICS CONFIGURATION CHANGE

Validation of an AVIONICS CONFIGURATION CHANGE

...

✓ **Job set-up**

...

✓ **Make sure that the OFF legend of the CMC 1 p/bsw is off.**

...

Procedure

...

✓ **Access to the CONFIGURATION CHANGE page.**

➡ **Validate the configuration changes.**
Make sure that the two other MCDUs are off.
When the access code is entered and the corresponding line key is pressed, the prompt adjacent to VALIDATE indication is shown.
Push the line key adjacent to the VALIDATE indication.
Push the line key adjacent to the VALIDATE CHANGE indication.

If you want to use the CMC 2 ...

...

Close-up

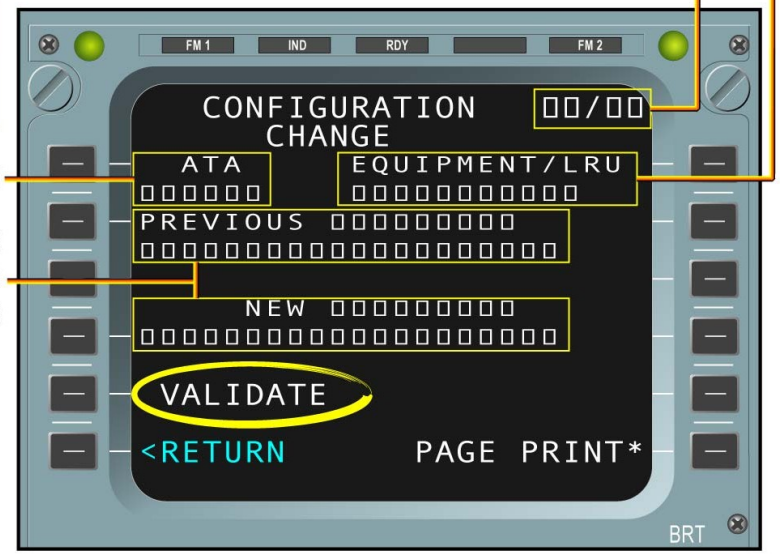

VALIDATION OF AN AVIONICS CONFIGURATION CHANGE

G7508471 - G3NT1T0 - FM45Y2BASEMCE02

Validation of an AVIONICS CONFIGURATION CHANGE

...

✓ **Job set-up**

...

✓ **Make sure that the OFF legend of the CMC 1 p/bsw is off.**

...

Procedure

...

✓ **Access to the CONFIGURATION CHANGE page.**

⇨ **Validate the configuration changes.**

⇨ Make sure that the two other MCDUs are off.
When the access code is entered and the corresponding line key is pressed, the prompt adjacent to VALIDATE indication is shown.
Push the line key adjacent to the VALIDATE indication.
Push the line key adjacent to the VALIDATE CHANGE indication.

If you want to use the CMC 2 ...

...

Close-up

VALIDATE conditions
- **2 out of 3 MCDUs must be shut off**
- **enter "XXX" passcode.**

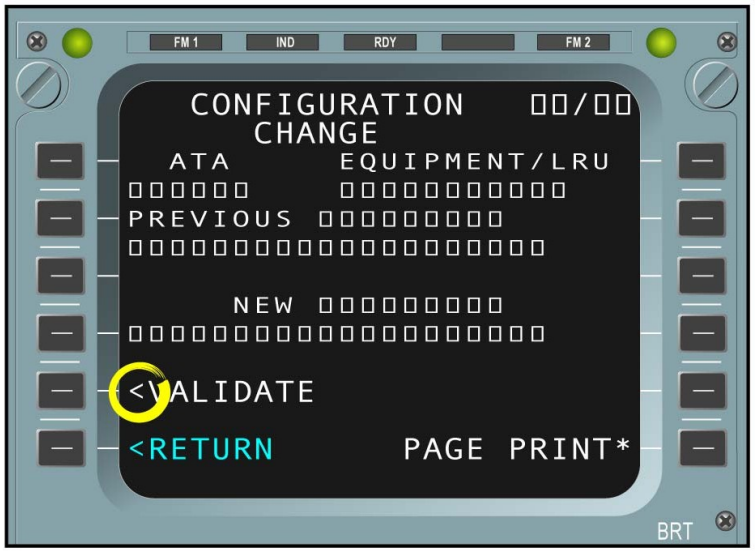

VALIDATION OF AN AVIONICS CONFIGURATION CHANGE

Validation of an AVIONICS CONFIGURATION CHANGE

...

Job set-up

...

Make sure that the OFF legend of the CMC 1 p/bsw is off.

...

Procedure

...

Access to the CONFIGURATION CHANGE page.

Validate the configuration changes.

Make sure that the two other MCDUs are off.
When the access code is entered and the corresponding line key is pressed, the prompt adjacent to VALIDATE indication is shown.
Push the line key adjacent to the VALIDATE indication.
Push the line key adjacent to the VALIDATE CHANGE indication.

If you want to use the CMC 2 ...

...

Close-up

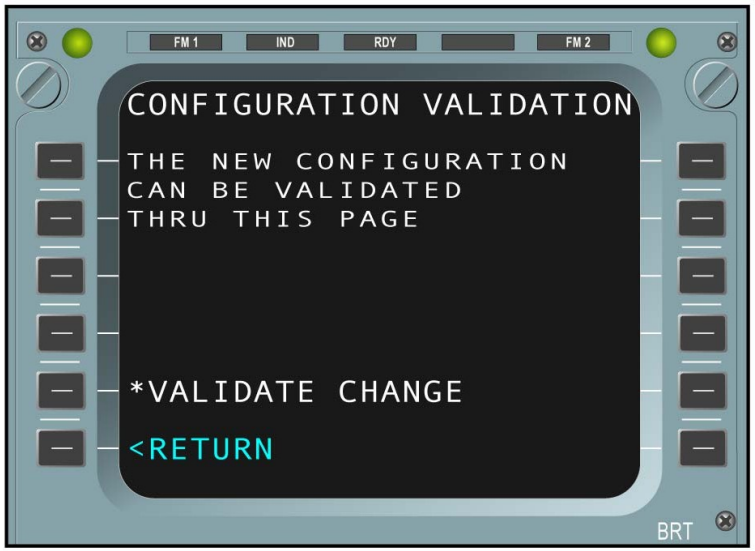

VALIDATION OF AN AVIONICS CONFIGURATION CHANGE

Validation of an AVIONICS CONFIGURATION CHANGE

...

✓ **Job set-up**

...

✓ **Make sure that the OFF legend of the CMC 1 p/bsw is off.**

...

Procedure

...

✓ **Access to the CONFIGURATION CHANGE page.**

⇨ **Validate the configuration changes.**

Make sure that the two other MCDUs are off.
When the access code is entered and the corresponding line key is pressed, the prompt adjacent to VALIDATE indication is shown.
Push the line key adjacent to the VALIDATE indication.
⇨ Push the line key adjacent to the VALIDATE CHANGE indication.

If you want to use the CMC 2 ...

...

Close-up

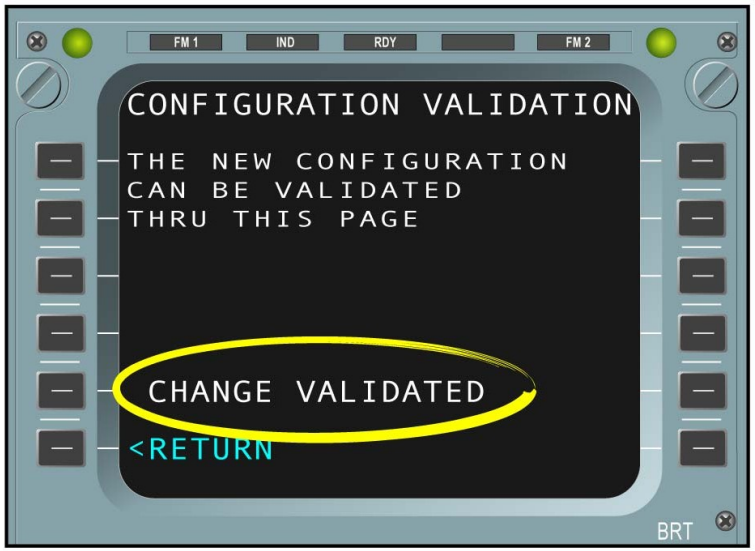

VALIDATION OF AN AVIONICS CONFIGURATION CHANGE

Validation of an AVIONICS CONFIGURATION CHANGE

...

✓ Job set-up

...

✓ Make sure that the OFF legend of the CMC 1 p/bsw is off.

...

Procedure

...

✓ Access to the CONFIGURATION CHANGE page.

✓ Validate the configuration changes.

⇨ If you want to use the CMC 2 instead of CMC1 (in case of CMC1 failure), you can do a transmission of the memorized configuration to the CMC 2.

...

Close-up

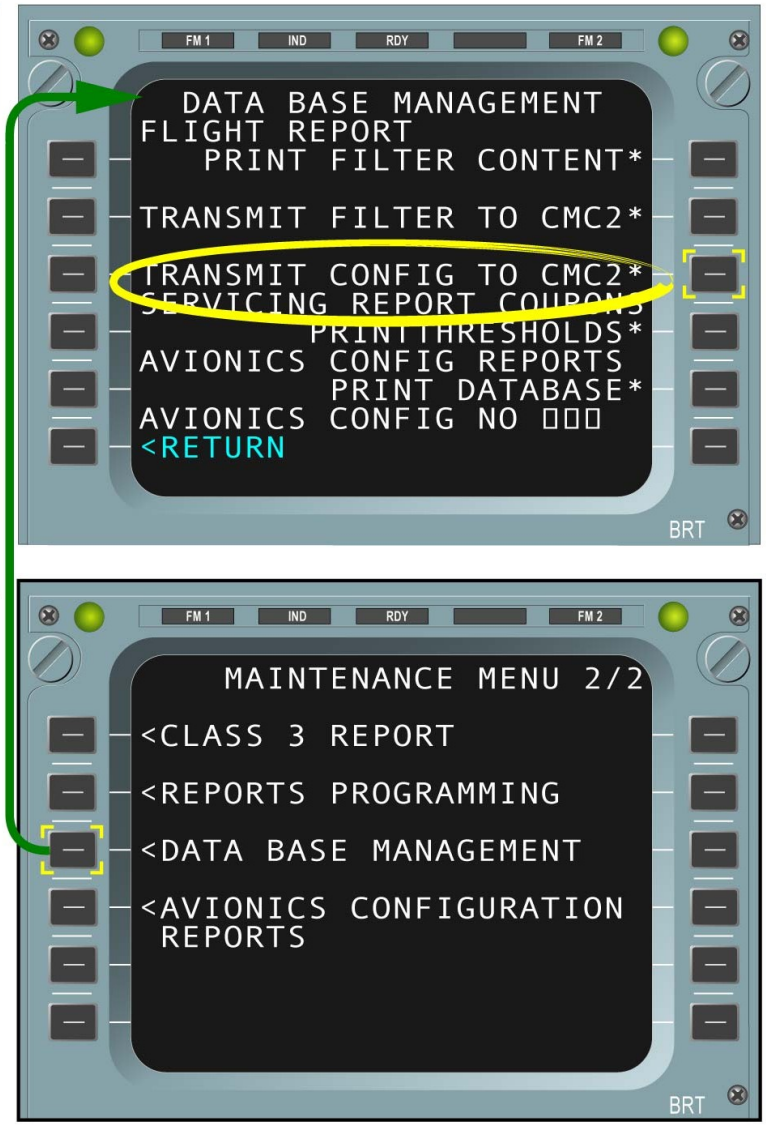

VALIDATION OF AN AVIONICS CONFIGURATION CHANGE

G7508471 - G3NT1T0 - FM45Y2BASEMCE02

Validation of an AVIONICS CONFIGURATION CHANGE

...

✓ Job set-up

...

✓ Make sure that the OFF legend of the CMC 1 p/bsw is off.

...

✓ Procedure

...

✓ Access to the CONFIGURATION CHANGE page.

✓ Validate the configuration changes.

✓ If you want to use the CMC 2 ...

...

✓ Close-up

VALIDATION OF AN AVIONICS CONFIGURATION CHANGE

This Page Intentionally Left Blank

G7508471 - G3NT1T0 - FM45Y2BASEMCE02

E-LOGBOOK DESCRIPTION (OPTION) (2)

Purpose

Paper-Logbook Comparison

The electronic Logbook (eLogbook) is a modern alternative to the traditional aircraft paper logbook that the airlines are required to use to operate their aircraft. The eLogbook gives the same capabilities as the traditional paper logbook plus additional functions to facilitate and improve flight crew and maintenance staff communication. The e-Logbook is currently an Airbus optional system.

eLOGBOOK

=

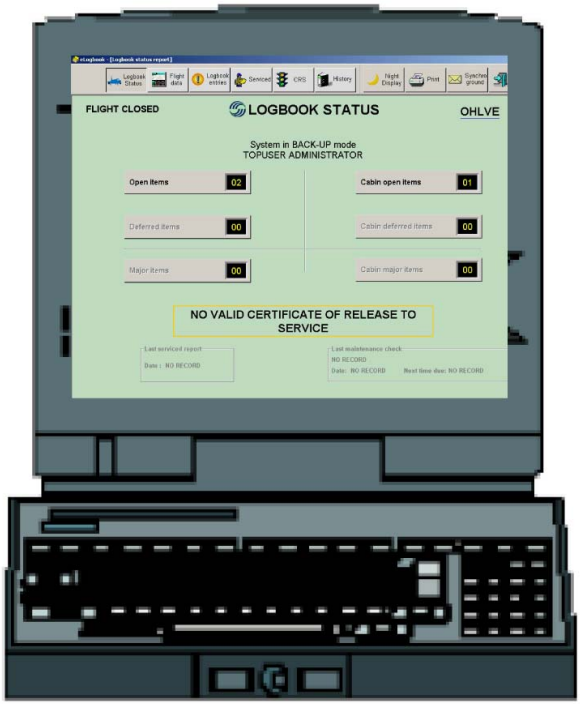

THE eLOGBOOK PROVIDES THE SAME CAPABILITIES AS THE CONVENTIONAL PAPER LOGBOOK PLUS ADDITIONAL FUNCTIONS TO FACILITATE AND IMPROVE FLIGHT CREW AND MAINTENANCE COMMUNICATIONS

PURPOSE - PAPER-LOGBOOK COMPARISON

G7508471 - G3NT1T0 - XM00D4LOGBOOK01

E-LOGBOOK DESCRIPTION (OPTION) (2)

Purpose (continued)

Functions

The eLogbook is the main communication tool for the aircraft operational staff. It enables the flight crew and the technical staff to be aware of the aircraft status, to enter aircraft defects and to report maintenance and servicing actions.
The eLogbook lets the flight crew:
- Consult the Logbook status,
- Accept / create a new flight,
- Report aircraft defects.

The maintenance staff uses the eLogbook to:
- Consult the aircraft status,
- Report aircraft defects,
- Report corrective or scheduled maintenance actions,
- Report servicing actions,
- Build the Certificate of Release into Service (CRS) of the aircraft.

Finally, the cabin crew can also use the eLogbook to:
- Consult the aircraft status,
- Inform the flight crew about regulatory cabin defects,
- Report non-regulatory cabin defects.

eLogbook = MAIN COMMUNICATION TOOL FOR AIRCRAFT OPERATIONAL STAFF

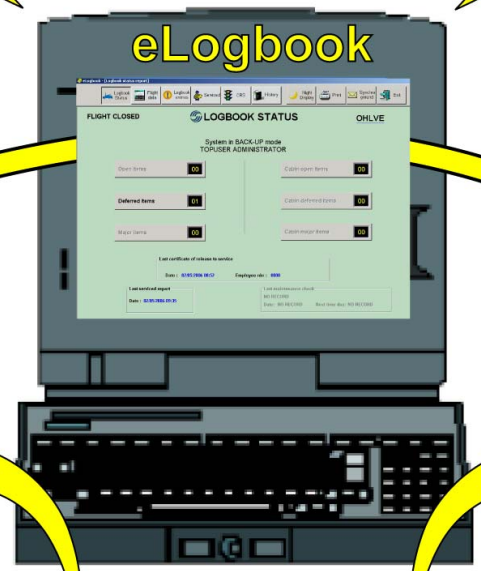

FLIGHT CREW

- OVERVIEW OF LOGBOOK STATUS
- FLIGHT ACCEPTANCE
- DEFECT REPORTING
- HAND OVER TO MAINTENANCE

MAINTENANCE

- OVERVIEW OF LOGBOOK STATUS
- DEFECT REPORTING
- MAINTENANCE AND SERVICED ACTIONS REPORTING
- SCHEDULE MAINTENANCE REPORTING
- CERTIFICATE OF RELEASE INTO SERVICE (CRS)

CABIN CREW

- OVERVIEW OF LOGBOOK STATUS FOR CABIN
- TECHNICAL CREW INFORMATION FOR REGULATORY ITEMS
- NON-REGULATORY REPAIR ACTION REPORTING
- CABIN DEFECT REPORTING

PURPOSE - FUNCTIONS

G7508471 - G3NT1T0 - XM00D4LOGBOOK01

E-LOGBOOK DESCRIPTION (OPTION) (2)

Use Philosophy

G7508471 - G3NT1T0 - XM00D4LOGBOOK01

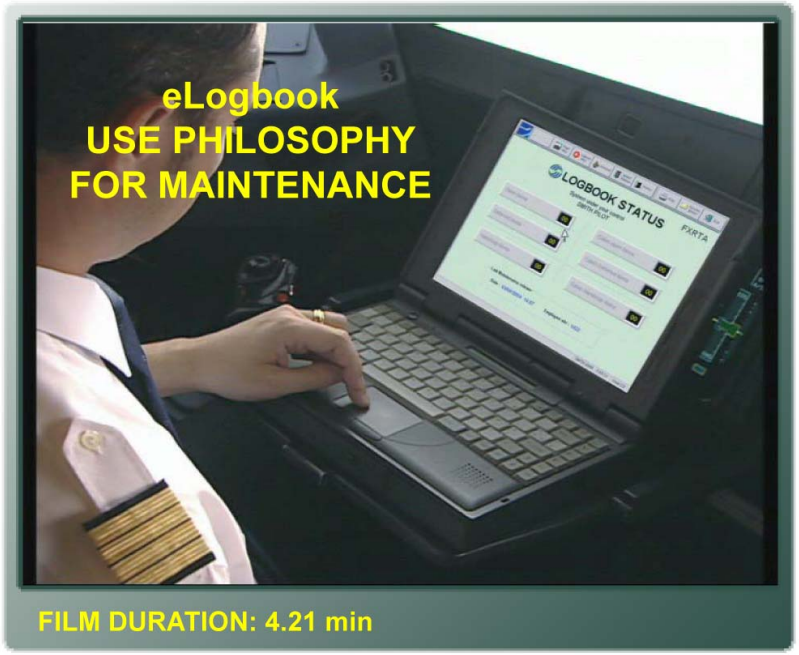

USE PHILOSOPHY

AIRMAN GATE DESCRIPTION (OPTION) (2)

What is AIRMAN

AIRcraft Maintenance ANalysis (AIRMAN) is a ground-based software dedicated to optimize the maintenance of AIRBUS fly-by-wire aircraft composed of:
- On Board Maintenance System (OMS)
- Real-Time Communication System

AIRMAN is also used for the identification and management of unscheduled and scheduled maintenance events.
AIRMAN's data analysis, synthesis and presentation has the following benefits:
- Simpler, more effective troubleshooting
- Preventive maintenance recommendations
- More effective engineering support.

These benefits can be used by the airlines to:
- Improve aircraft Dispatch Reliability
- Reduce operational costs
- Reduce maintenance costs.

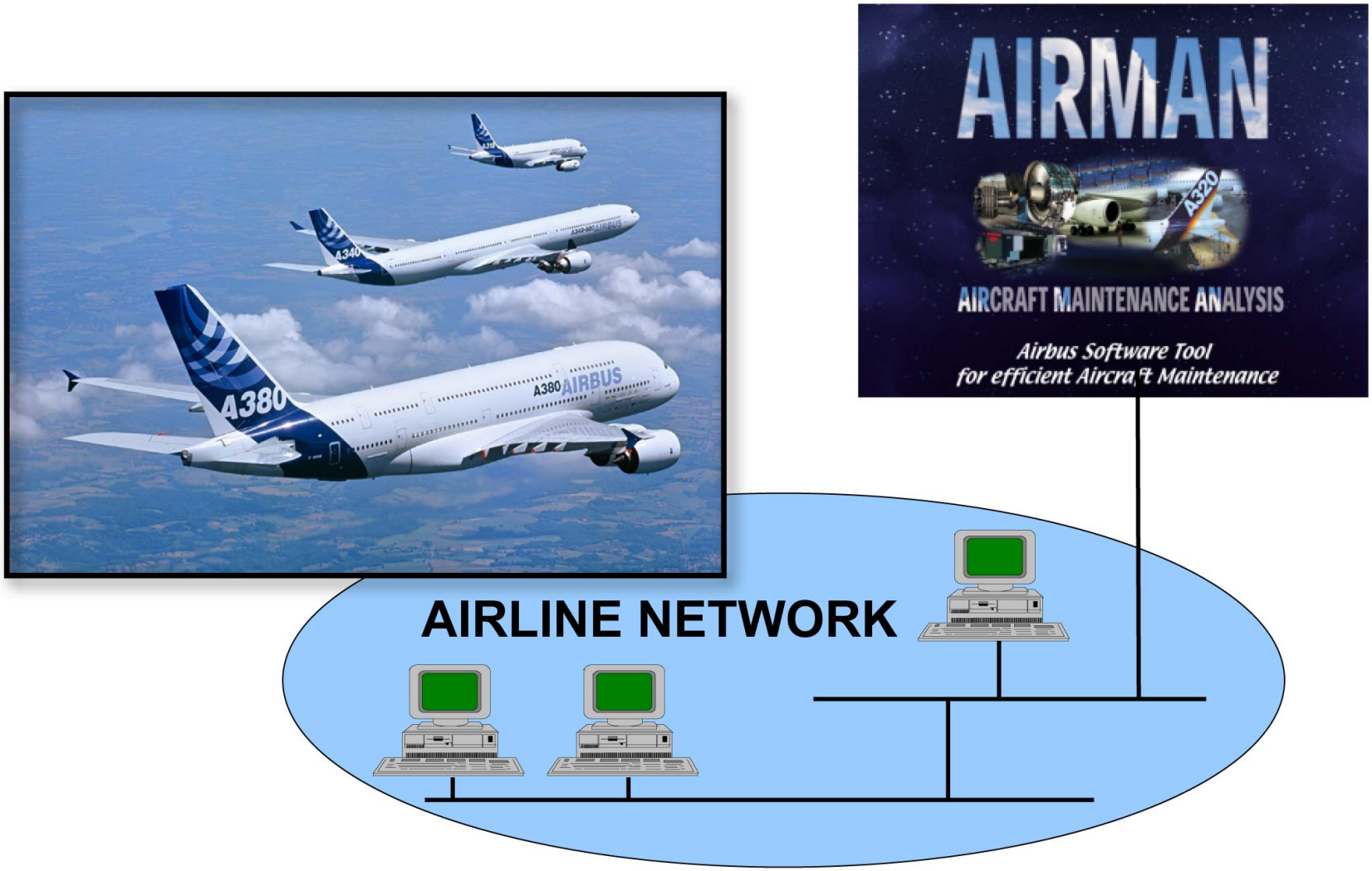

WHAT IS AIRMAN

AIRMAN GATE DESCRIPTION (OPTION) (2)

Functional Overview

AIRMAN is a ground-based software dedicated to the identification and the management of unscheduled maintenance.
AIRMAN receives and analyses the aircraft status information generated by the Onboard Maintenance System (OMS) and also e-logbook data.
The information is automatically transmitted to the ground by the aircraft's communication system.
These information sources are synthesized, combined with Airbus's and the Airline's own technical documentation and presented through a user-friendly interface. Aircraft status information is sent to AIRMAN while the aircraft is both in flight and on ground. Message analysis also takes place in real-time.
These capabilities maximize the time available for appropriate maintenance actions to be determined and preparations to be made.
AIRMAN is capable of analyzing an aircraft's fault history and consequently identifying and prioritizing preventive maintenance actions.

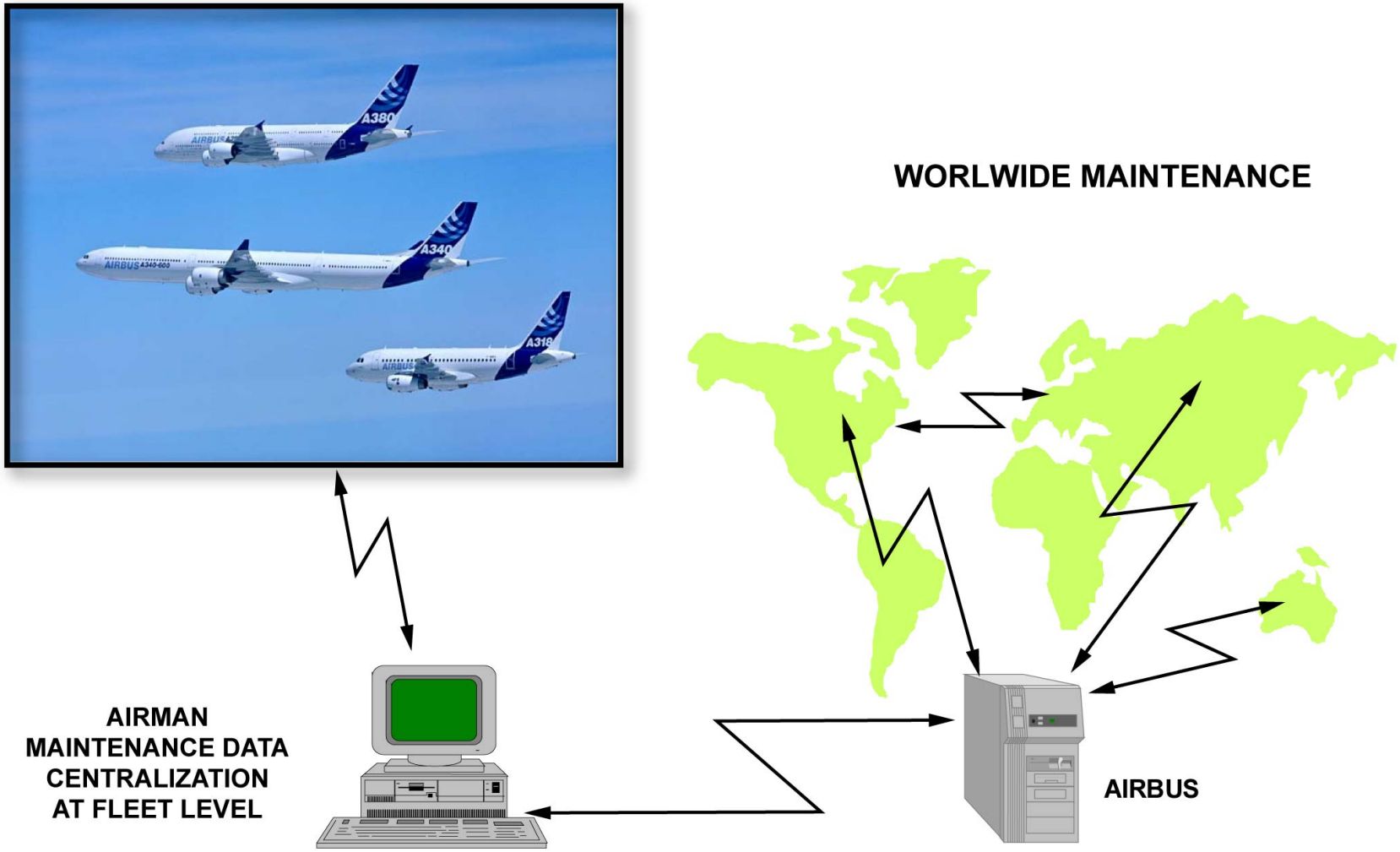

FUNCTIONAL OVERVIEW

AIRMAN GATE DESCRIPTION (OPTION) (2)

Maintenance Philosophy

The aircraft maintenance philosophy is based on the following steps:
- Fault detection made by the computers BITEs
- Cockpit effects as flags on Display Units, and warning generated by the Flight Warning System (FWS)
- Centralization and correlation by the Onboard Maintenance System (OMS) of BITE faults, cockpit effects and related maintenance procedures
- Generation of Post Flight Report (PFR)
- Fault event data reporting through the eLogbook
- Fault event data and reports transmission to AIRMAN for maintenance support on ground

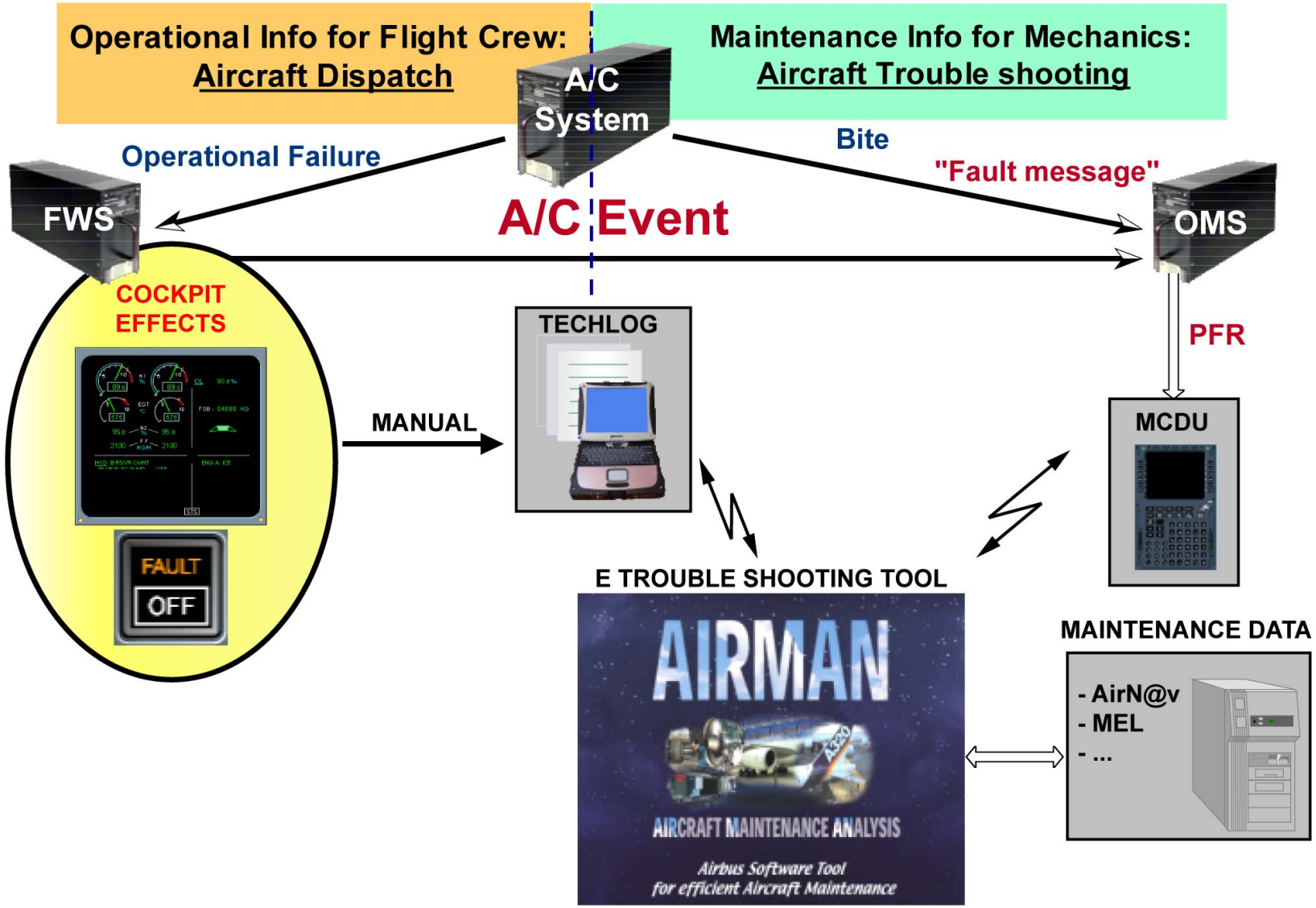

MAINTENANCE PHILOSOPHY

AIRMAN GATE DESCRIPTION (OPTION) (2)

AIRMAN Links

AIRMAN maintenance analysis is based on the following received data:
- Aircraft data
- Airbus data
- Airline data

Aircraft data:
- Cockpit and cabin effects
- Fault messages
- Logbook entries
- Operational reports (CFR, PFR, ACMS Reports)

Airbus data is made of an aircraft knowledge database build up with the airline worldwide feedback and aircraft documentation:
- TFUs
- SILs
- MMEL/MEL
- AirN@V

Airlines data can be:
- Technical entries (related to A/C events)
- Work orders

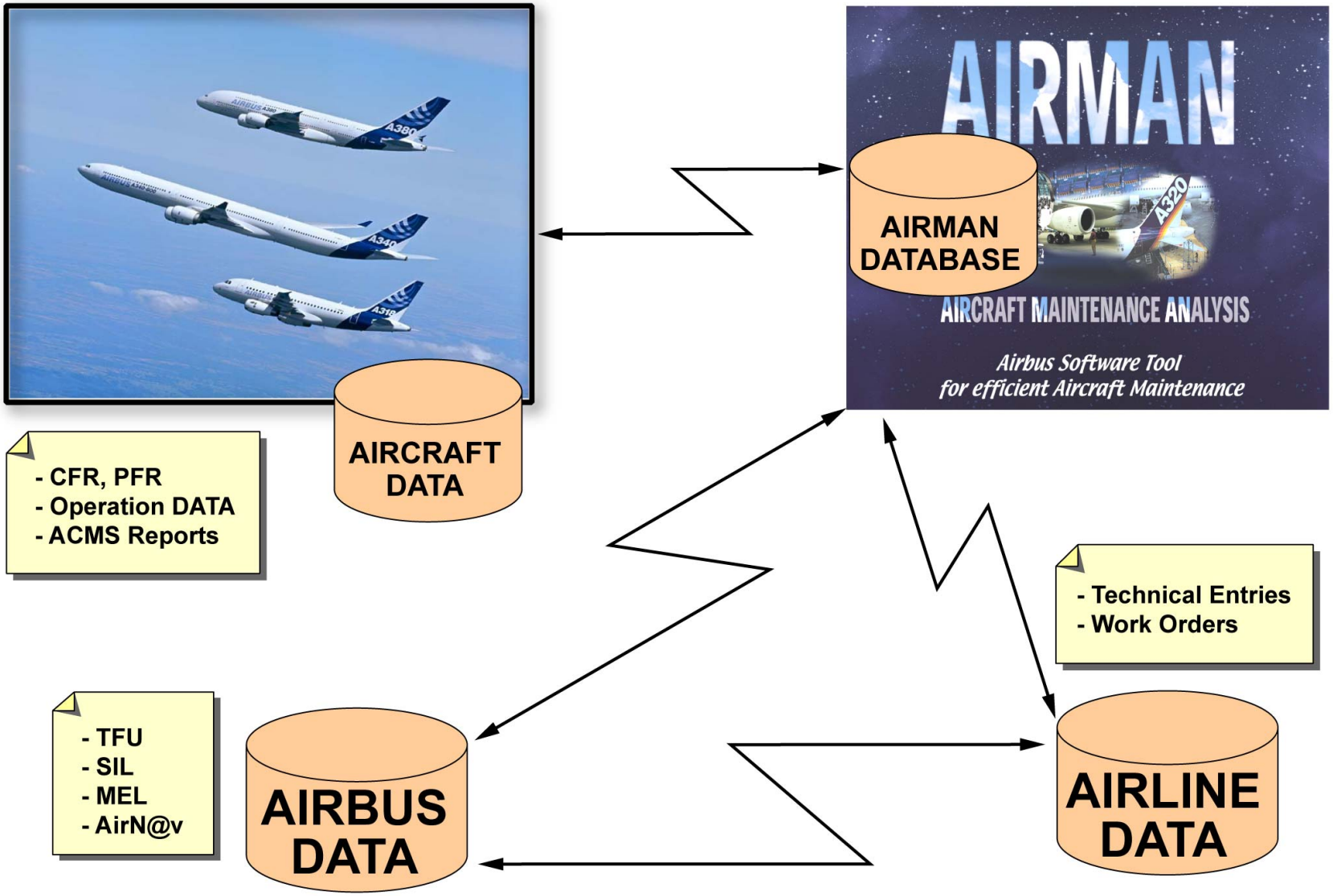

AIRMAN LINKS

AIRMAN GATE DESCRIPTION (OPTION) (2)

Last A/C Status - Flight Box

On the "Last A/C Status" Page, each flight is represented by a flight box.
A flight box indicates:
- The flight departure airport
- The flight number
- The flight arrival airport
- The OOOI (OUT/OFF/ON/IN):
* OUT: "Out of gate"
* OFF: "Lift off"
* ON: "On ground"
* IN: "In gate"
- Flight departure time
- Aircraft tail number
- Flight arrival time
- Real-time indication

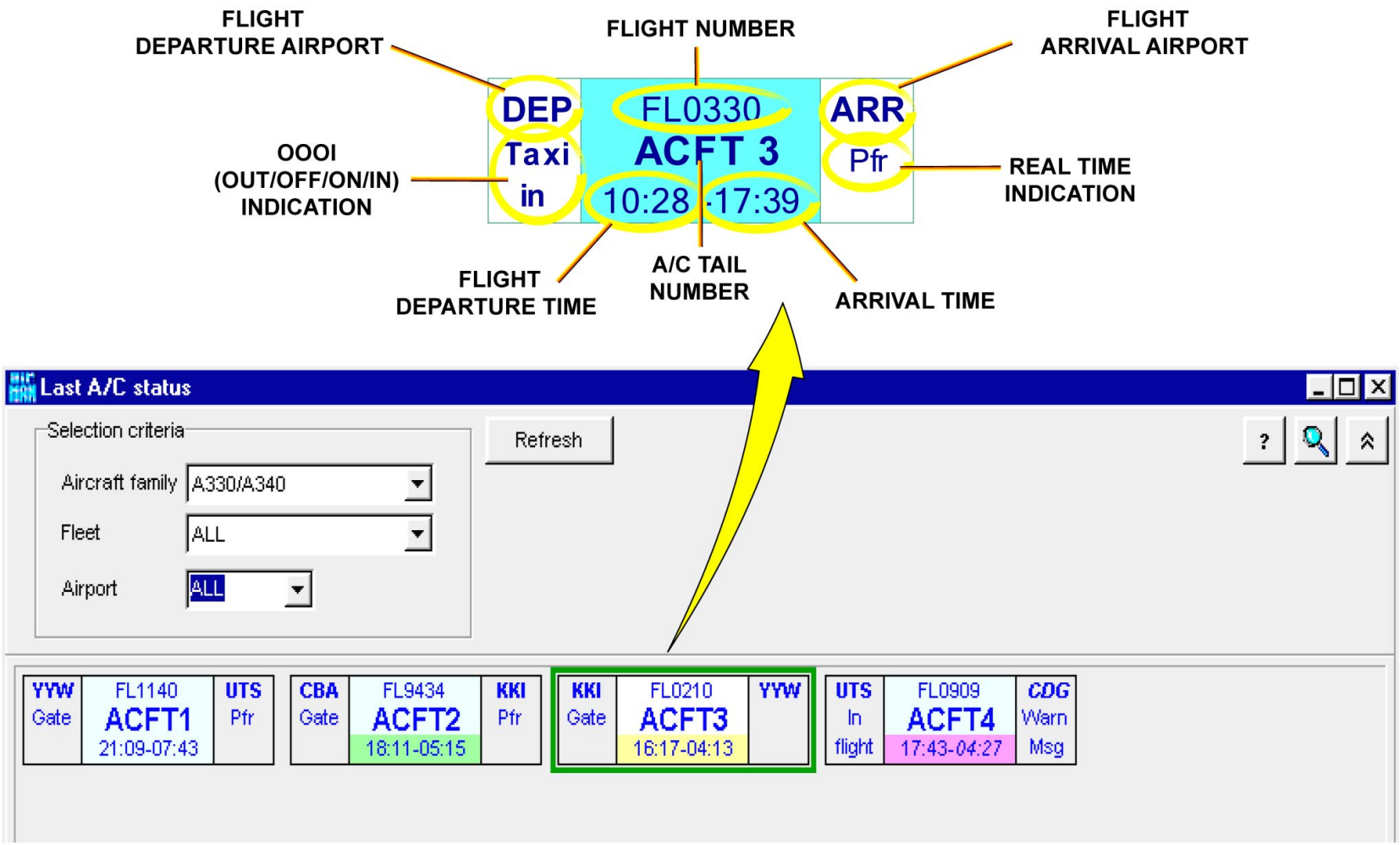

LAST A/C STATUS - FLIGHT BOX

AIRMAN GATE DESCRIPTION (OPTION) (2)

PFR/LOG for Aircraft

The "PFR/Logbook" Page for a particular aircraft displays:
- The last leg logbook entries
- The Current Flight Report (CFR)/Post Flight Report (PFR)
- The previous flight items
- The work orders related to the A/C

The page also permanently displays all flight related data.
In addition, the page enables to enter new:
- Defects
- Fault messages/warnings
- Work orders
- Serviced items
- Maintenance release

The CFR/PFR sub-function shows all current or post flight related fault events and related data.

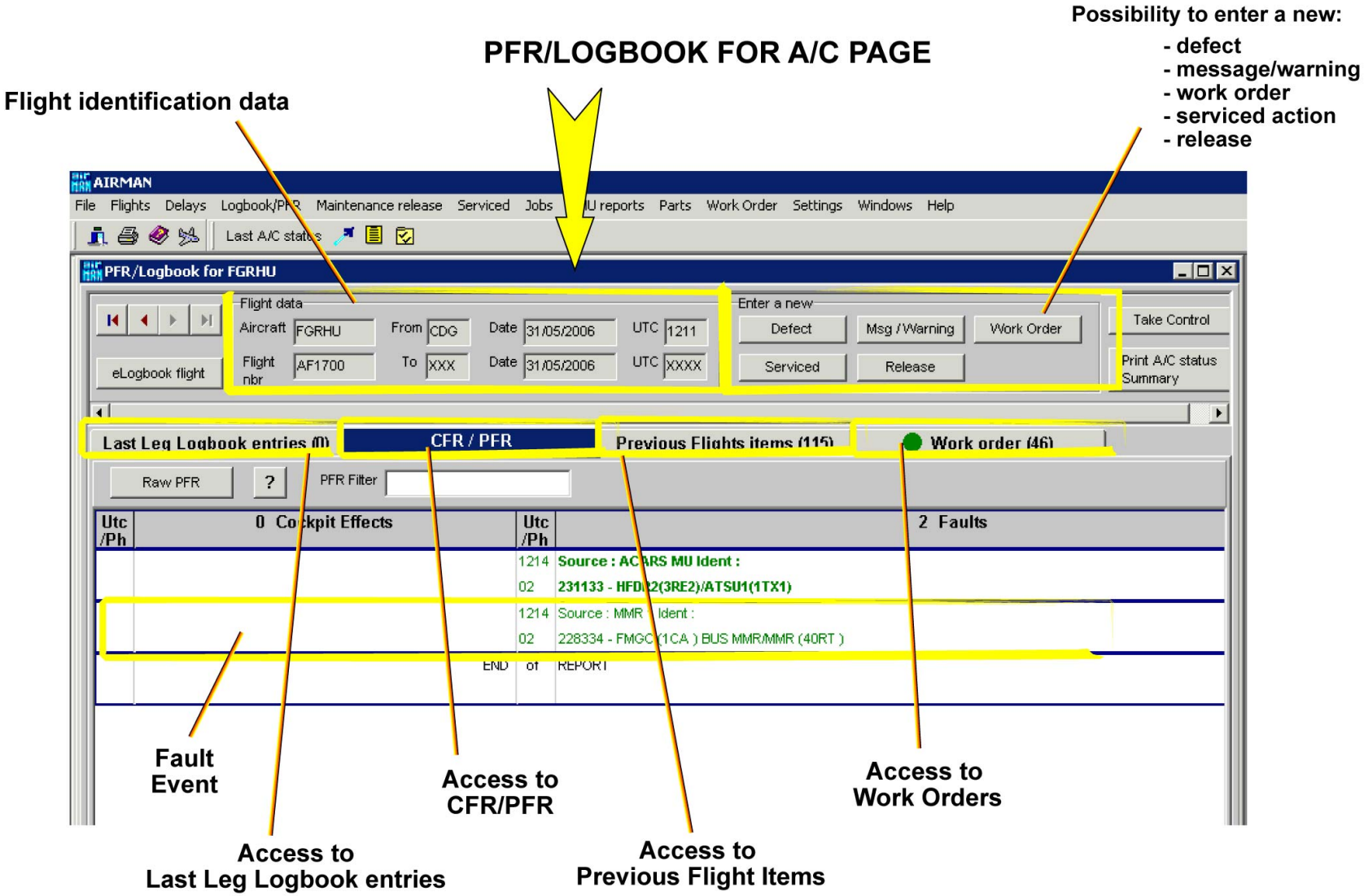

PFR/LOG FOR AIRCRAFT

AIRMAN GATE DESCRIPTION (OPTION) (2)

Advisor

The third data source used by AIRMAN to make the maintenance easier is Airbus data. Airbus data is made of an aircraft knowledge database build up with the airline worldwide feedback and aircraft documentation:
- TFUs
- SILs
- MEL
- AirN@V

This data are implemented in the AIRMAN database and correlated to a unique fault event. They can be accessed directly from the "Defect Advisor".

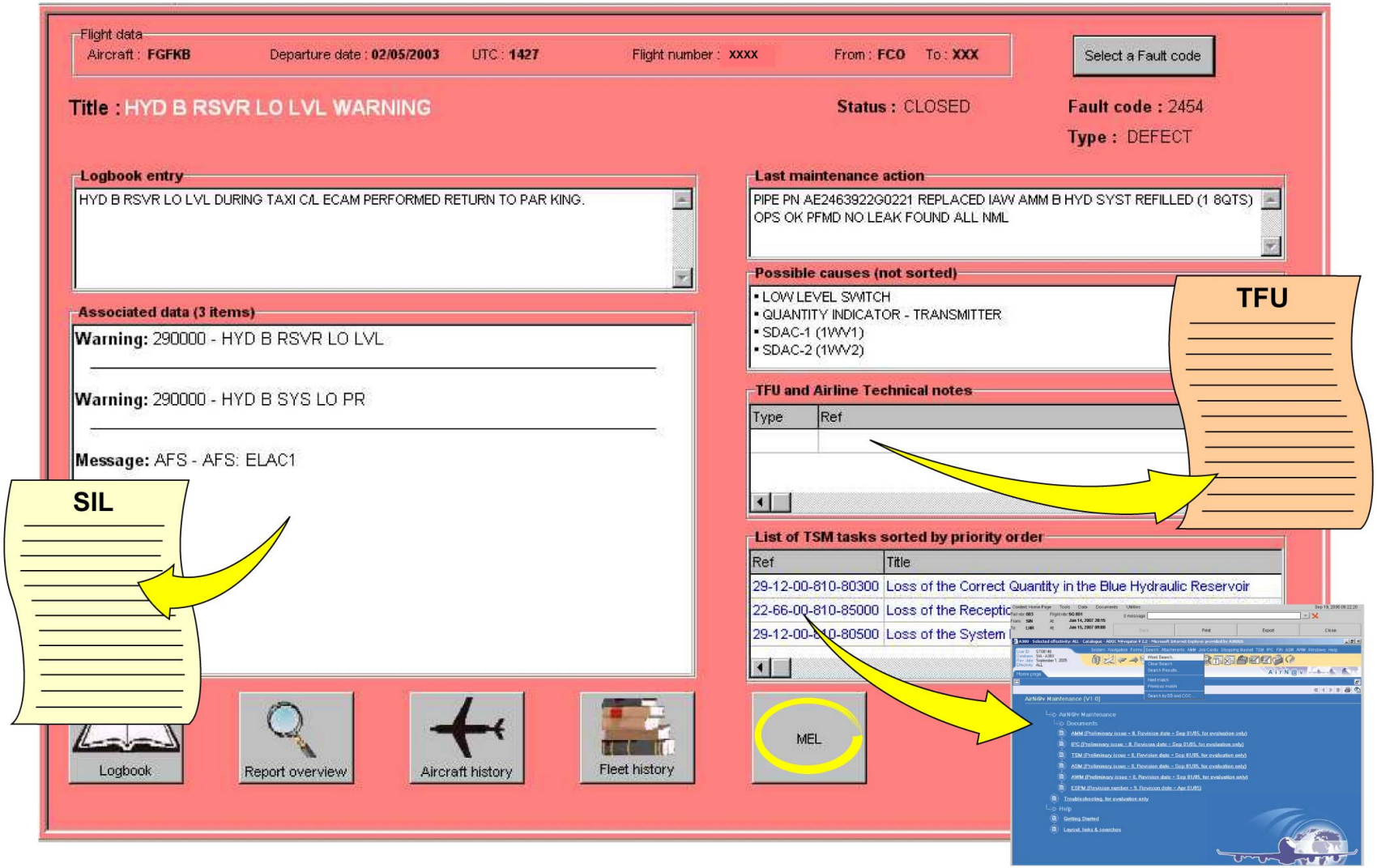
Flight data
Aircraft : FGFKB
Departure date : 02/05/2003
UTC : 1427
Flight number : XXXX
From : FCO
To : XXX
Select a Fault code
Title : HYD B RSVR LO LVL WARNING
Status : CLOSED
Fault code : 2454
Type : DEFECT
Logbook entry
HYD B RSVR LO LVL DURING TAXI C/L ECAM PERFORMED RETURN TO PAR KING.
Last maintenance action
PIPE PN AE2463922G0221 REPLACED IAW AMM B HYD SYST REFILLED (1 8QTS)
OPS OK PFMD NO LEAK FOUND ALL NML
Possible causes (not sorted)
LOW LEVEL SWITCH
QUANTITY INDICATOR - TRANSMITTER
SDAC-1 (1WV1)
SDAC-2 (1WV2)
TFU
Associated data (3 items)
Warning: 290000 - HYD B RSVR LO LVL
Warning: 290000 - HYD B SYS LO PR
Message: AFS - AFS: ELAC1
TFU and Airline Technical notes
Type
Ref
SIL
List of TSM tasks sorted by priority order
Ref
Title
29-12-00-810-80300
Loss of the Correct Quantity in the Blue Hydraulic Reservoir
22-66-00-810-85000
29-12-00-810-80500
Loss of the System
Logbook
Report overview
Aircraft history
Fleet history
MEL

ADVISOR

AIRBUS S.A.S.
31707 BLAGNAC cedex, FRANCE
STM
REFERENCE G7508471
NOVEMBER 2008
PRINTED IN FRANCE
AIRBUS S.A.S. 2008
ALL RIGHTS RESERVED

AN EADS COMPANY

A330-200/300
TECHNICAL TRAINING MANUAL
MAINTENANCE COURSE - T1+T2 (LVL 2&3) (RR Trent 700)
INFORMATION SYSTEMS

This document must be used for training purposes only

Under no circumstances should this document be used as a reference

It will not be updated.

All rights reserved
No part of this manual may be reproduced in any form,
by photostat, microfilm, retrieval system, or any other means,
without the prior written permission of AIRBUS S.A.S.

AIRBUS Environmental Recommendation
Please consider your environmental responsability before printing this document.

INFORMATION SYSTEMS

ATIMS Line Maintenance Briefing (2) 2
ATIMS D/O (3) 24
ATIMS Menu D/O (3) 34
Information Systems AINS D/O (3) 70
Information Systems CINS D/O (3) 82

MAINTENANCE PRACTICE

Information Systems MCDU Pages (2) 94
Information Systems Base Maintenance (3) 100

ATIMS LINE MAINTENANCE BRIEFING (2)

ATIMS

GENERAL

The ATIMS complies with the future developments of the communication, navigation, surveillance and Air Traffic Management (ATM) also known as Future Air Navigation System (FANS). It covers the evolution of the way the airspace will be used in the years to come. It is used in different operational environments and is designed and easily configured to the airlines needs. The ATIMS sends data-link communication through:
- VHF Data Link (VDL),
- HF Data Radio (HFDR)
- Satellite Communication (SATCOM)

The exchange of complex data or specific reports between the aircraft and the ground centers:
- Controller Pilot Data Link Communications (voice in backup) for ATM,
- automatic reporting (position, intention) for air traffic surveillance,
- specific airline/aircraft communications (operational control) to improve airline operational costs and flexibility.

Standard AOC functionalities are usually given but airlines can customize these functions and the way the crew can get the acces. On the ground, the different existing networks dispatch the messages. These networks are operated by private companies such as ARINC, SITA and others, which are known as service providers.
The Film presents FANS A and B.

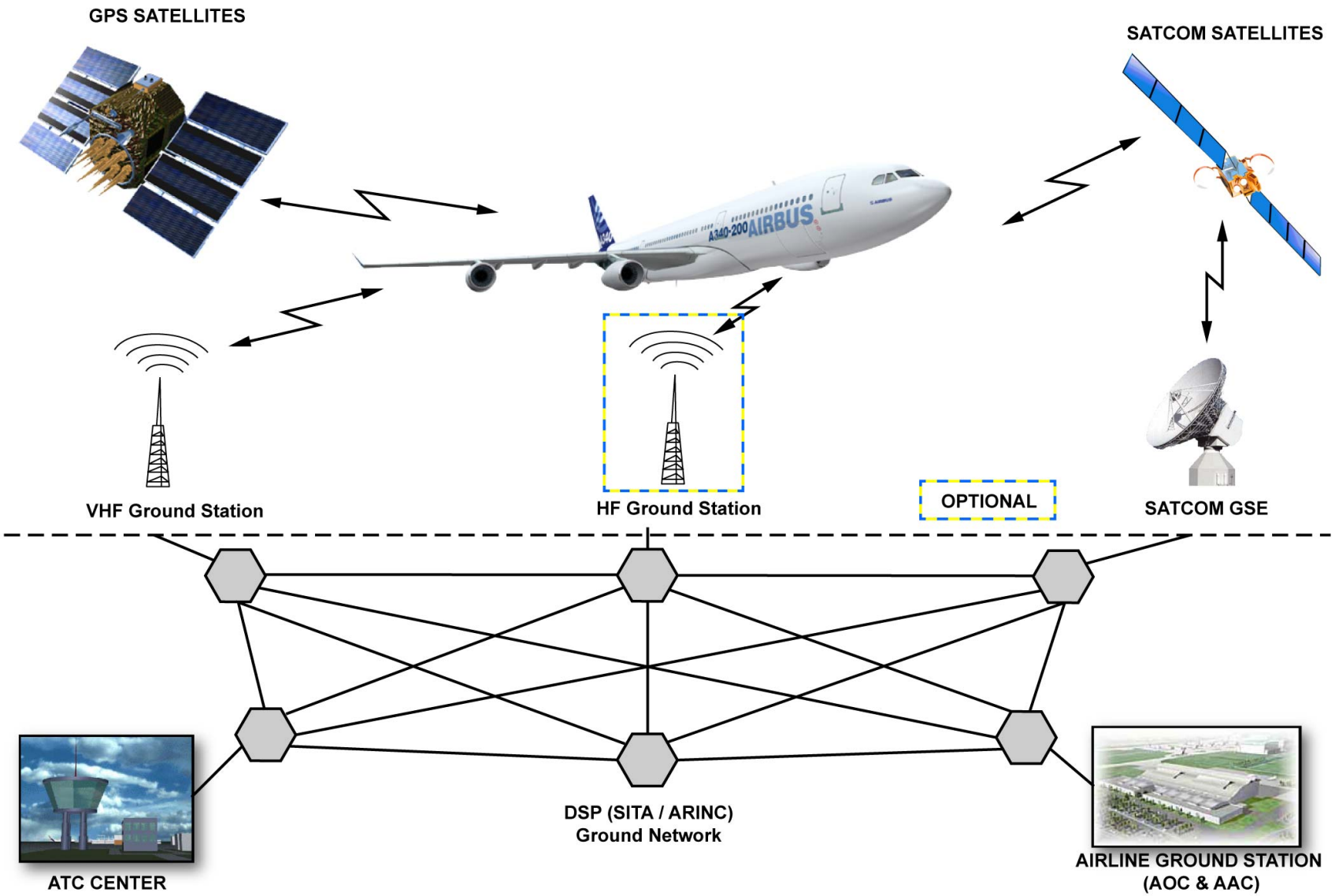

ATIMS - GENERAL

G7508471 - G7OT0T0 - FM46B1000000001

ATIMS - GENERAL

This Page Intentionally Left Blank

G7508471 - G7OT0T0 - FM46B1000000001

ATIMS LINE MAINTENANCE BRIEFING (2)

ATIMS (continued)

AIRCRAFT COMMUNICATION AND NETWORK

The On-board communication Network is made of a central element (ATSU), communication transceivers (VDR,HFDR,SATCOM/SDU), navigation peripheral systems (MMR, ADIRUs, FMS for Aircraft position computation) and terminal equipments (FMS, CMS, DMU, Cabin Terminal)

G7508471 - G7OT0T0 - FM46B1000000001

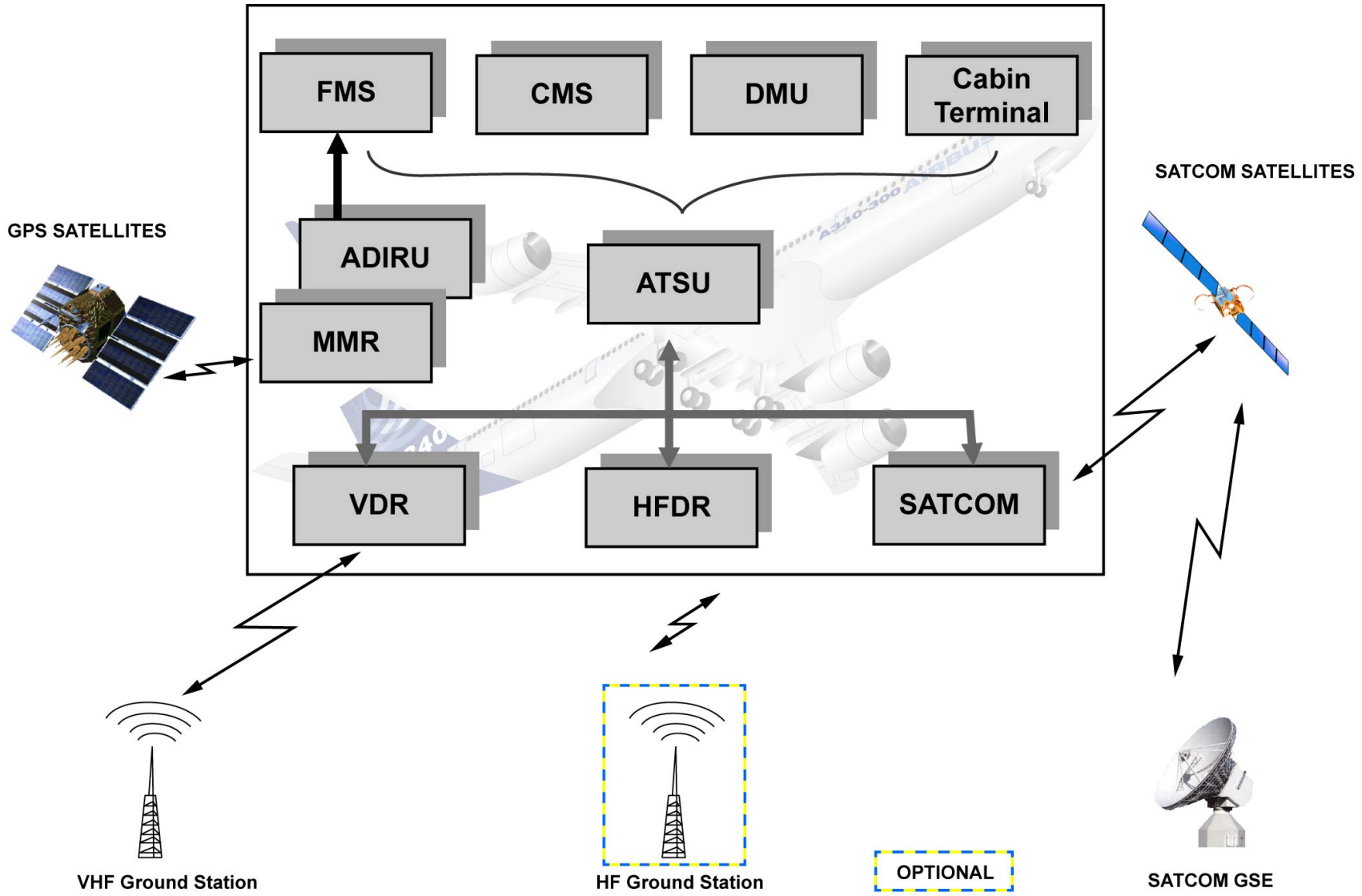

ATIMS - AIRCRAFT COMMUNICATION AND NETWORK

ATIMS LINE MAINTENANCE BRIEFING (2)

ARCHITECTURE

The ATIMS pre-FANS configuration mainly has an Air Traffic Service Unit (ATSU), which is used:
- to manage communications (air/ground data-links),
- to manage applications (on board data routing).

The communication devices include:
- the SATCOM,
- the VDR,
- the HFDR.

The pre-FANS crew interfaces include the ECAM, and the MCDU. For FANS-A and FANS-B equipped aircraft there are:
- two Data Communication Display Units (DCDUs),
- two attention getter P/Bs, marked "ATC MeSsaGe",
- the MCDU "ATC COM" key operative.

The ATSU also manages the communication message exchanges to and from the peripheral computers (on-board routing function).

G7508471 - G7OT0T0 - FM46B1000000001

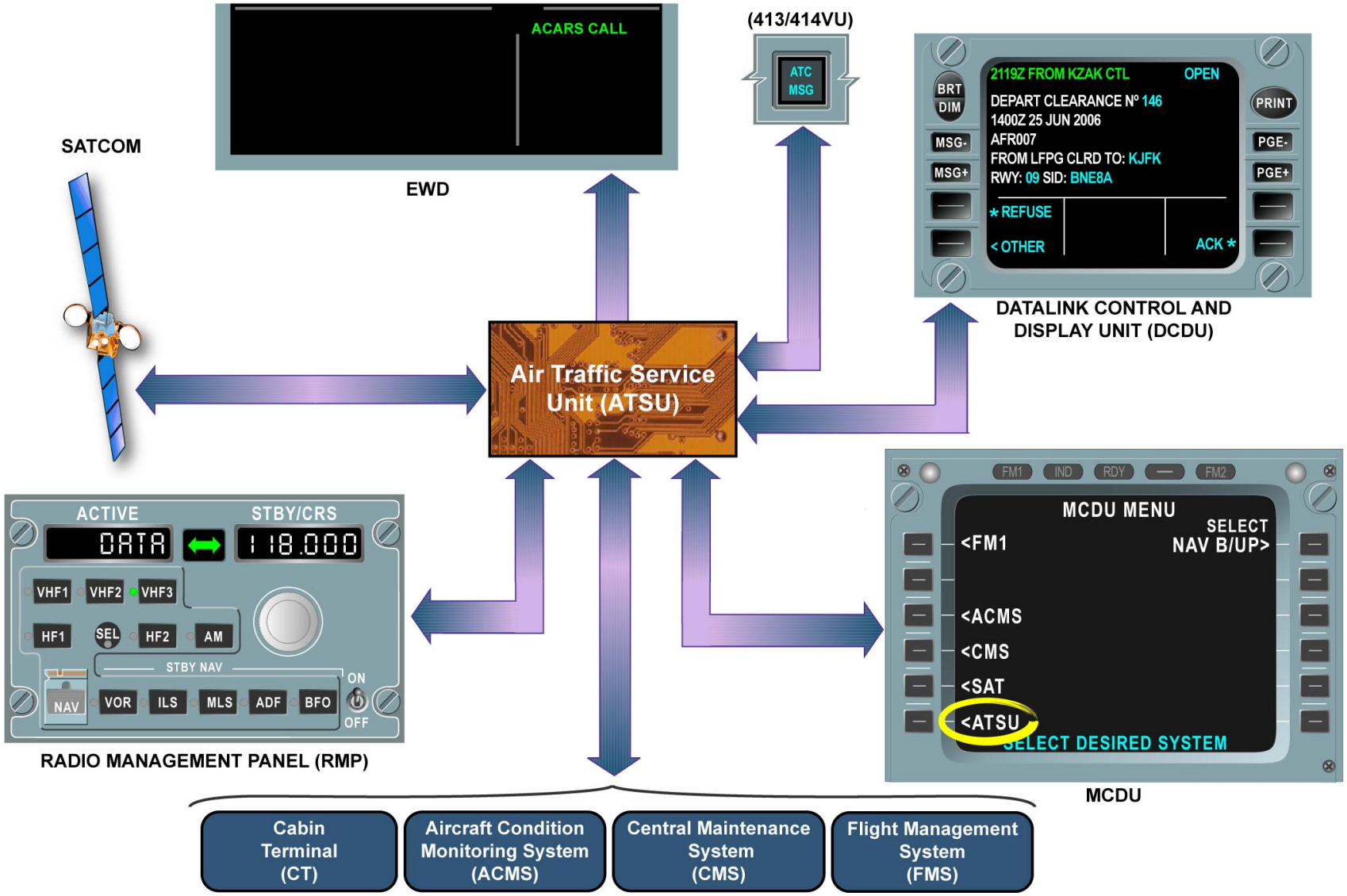

ARCHITECTURE

G7508471 - G7OT0T0 - FM46B1000000001

ATIMS LINE MAINTENANCE BRIEFING (2)

ATIMS DATA LINK APPLICATIONS

ATSU contains a set of two main applications:
- ATC Operational Program, for Data link with ATC Controllers.(Routing Policy: matches with airworthiness regulation)
- AOC/AAC Operational Program, for Data link with airlines facilities. (Routing Policy: high flexibility for the airline)

G7508471 - G7OT0T0 - FM46B1000000001

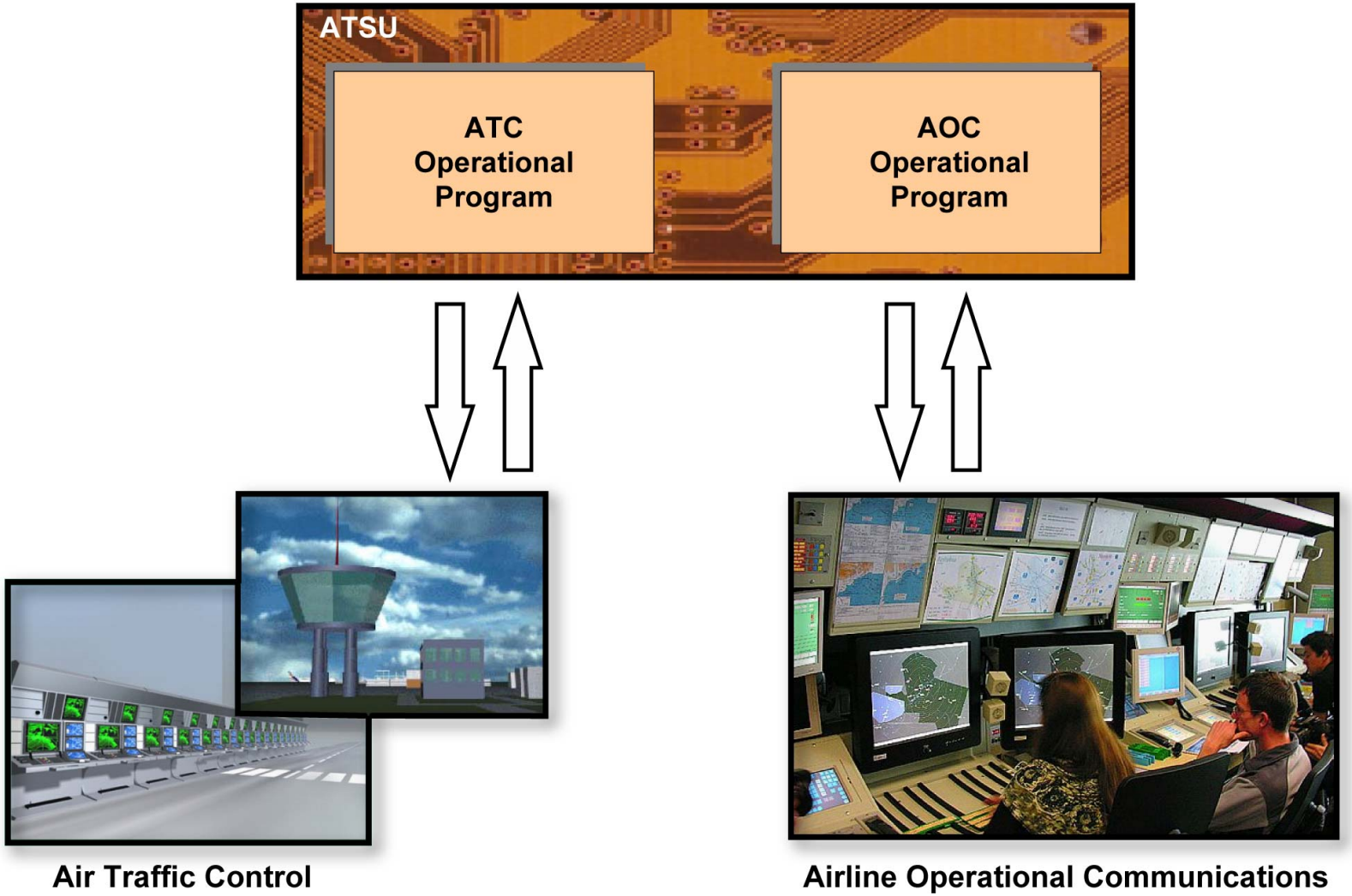

ATIMS DATA LINK APPLICATIONS

G7508471 - G7OT0T0 - FM46B1000000001

ATIMS LINE MAINTENANCE BRIEFING (2)

ATIMS DATA LINK APPLICATIONS (continued)

ATC DATA LINK APPLICATIONS

The ATSU has a set of services (ATC Data-Link Applications) for the flight crew.
These ATC Data-Link Applications are:
- The Controller Pilot Data-Link Communication (CPDLC)
- The Air Traffic service Facility Notification (AFN)
- The Automatic Dependent Surveillance (ADS)
- The Automatic Terminal Information Service (ATIS)
- The Departure Clearance (DL)
- The Oceanic Clearance (OC)

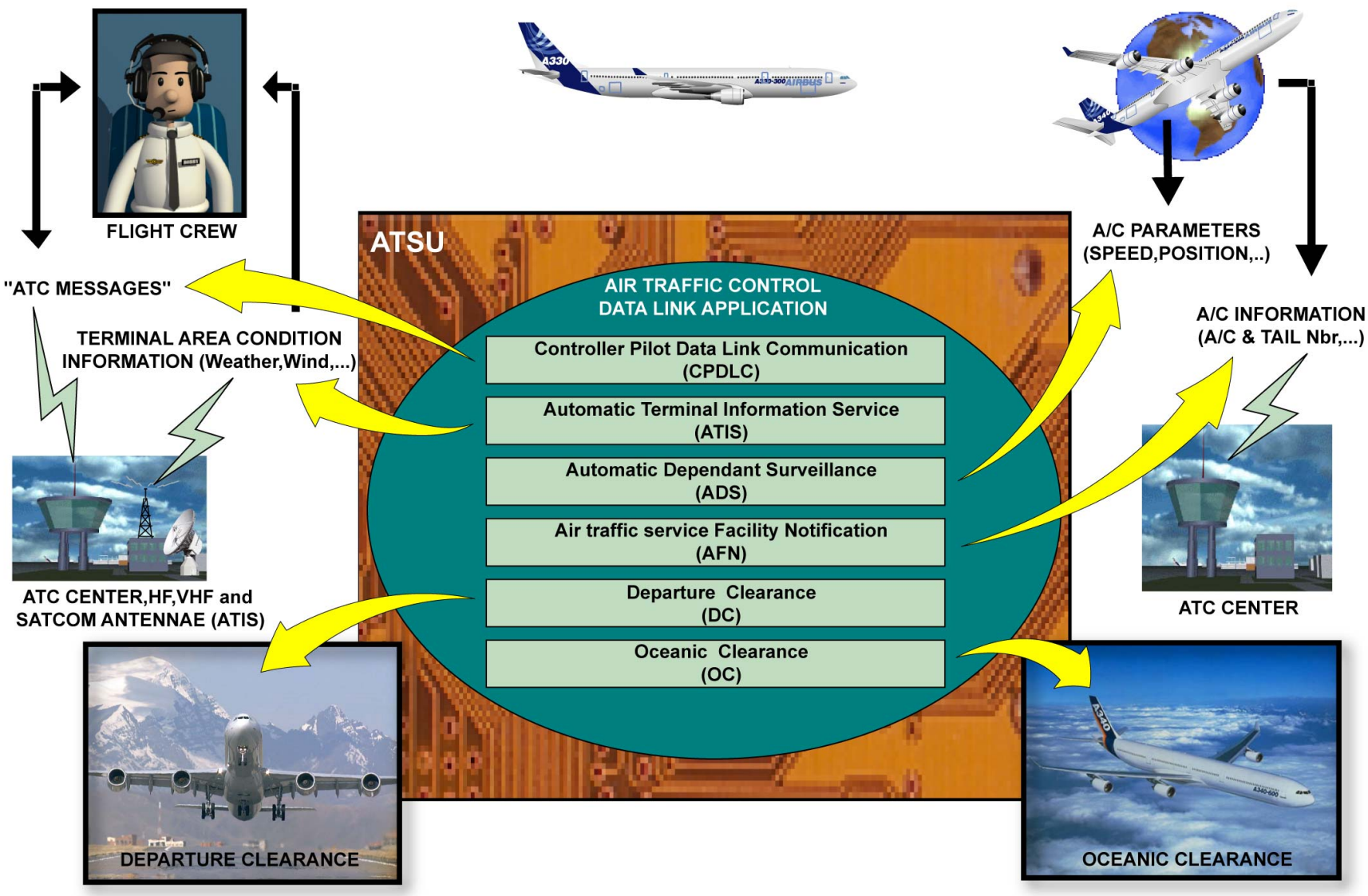

ATIMS DATA LINK APPLICATIONS - ATC DATA LINK APPLICATIONS

G7508471 - G7OT0T0 - FM46B1000000001

ATIMS LINE MAINTENANCE BRIEFING (2)

ATIMS DATA LINK APPLICATIONS (continued)

ATC APPLICATIONS PACKAGES

Within the ATC Operational Program, the six ATC Data Link Applications are grouped into 2 packages, which can be activated via Software Pin Programming (SPP).
The FANS A applications group is composed of:
- The Controller Pilot Data-Link Communication (CPDLC)
- The Air Traffic service Facility Notification (AFN)
- The Automatic Dependent Surveillance (ADS)

The ARINC 623 applications group is composed of:
- The Automatic Terminal Information Service (ATIS)
- The Departure Clearance (DL)
- The Oceanic Clearance (OC)

G7508471 - G7OT0T0 - FM46B1000000001

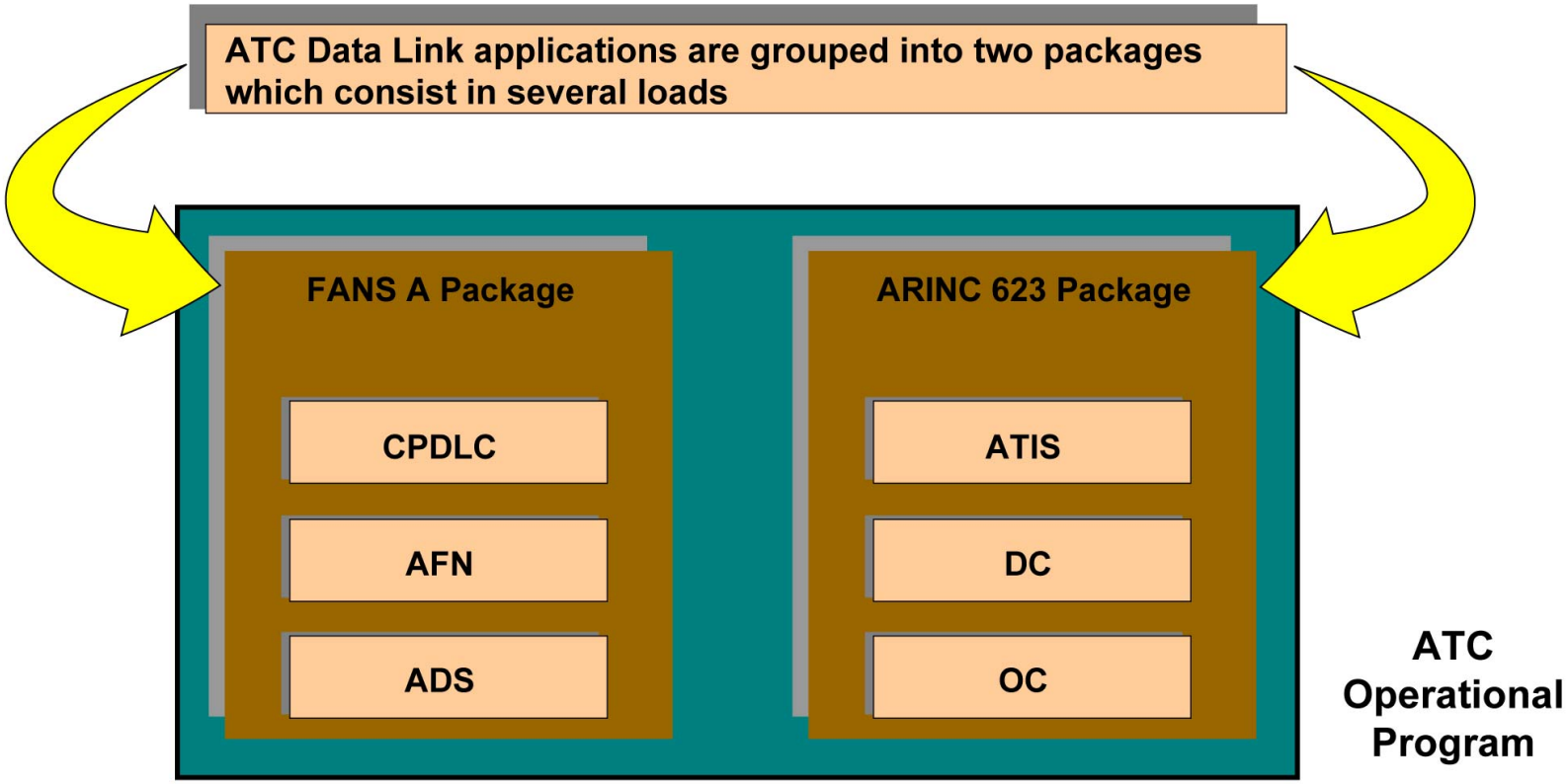

Note:
Software Pin Programming (SPP) enables either of the 2 following combinations:
- ACARS version package activated only = FANS A
or
- Both ACARS version package + ARINC 623 package activated = FANS A+

ATIMS DATA LINK APPLICATIONS - ATC APPLICATIONS PACKAGES

G7508471 - G7OT0T0 - FM46B1000000001

ATIMS LINE MAINTENANCE BRIEFING (2)

ATIMS DATA LINK APPLICATIONS (continued)

AOC APPLICATIONS PACKAGES

The AOC (Airline Operational Communication) application is a set of software, which is used for operational data communication between the aircraft and the airline facilities located on the ground. The AOC software is embedded in the ATSU and accessible thought the ATSU MCDU pages. The AOC software can be customized to take into account airlines operations specificity.
The AOC is composed of two disks:
-One disk for the AOC application software (or interpreter)
-One disk for AOC database(s)
One part number identifies each disk. Ground support tools given by AOC vendors allow customization of the AOC database. The AOC application software modification requires in-depth knowledge of the AOC design and is usually done by the vendor.

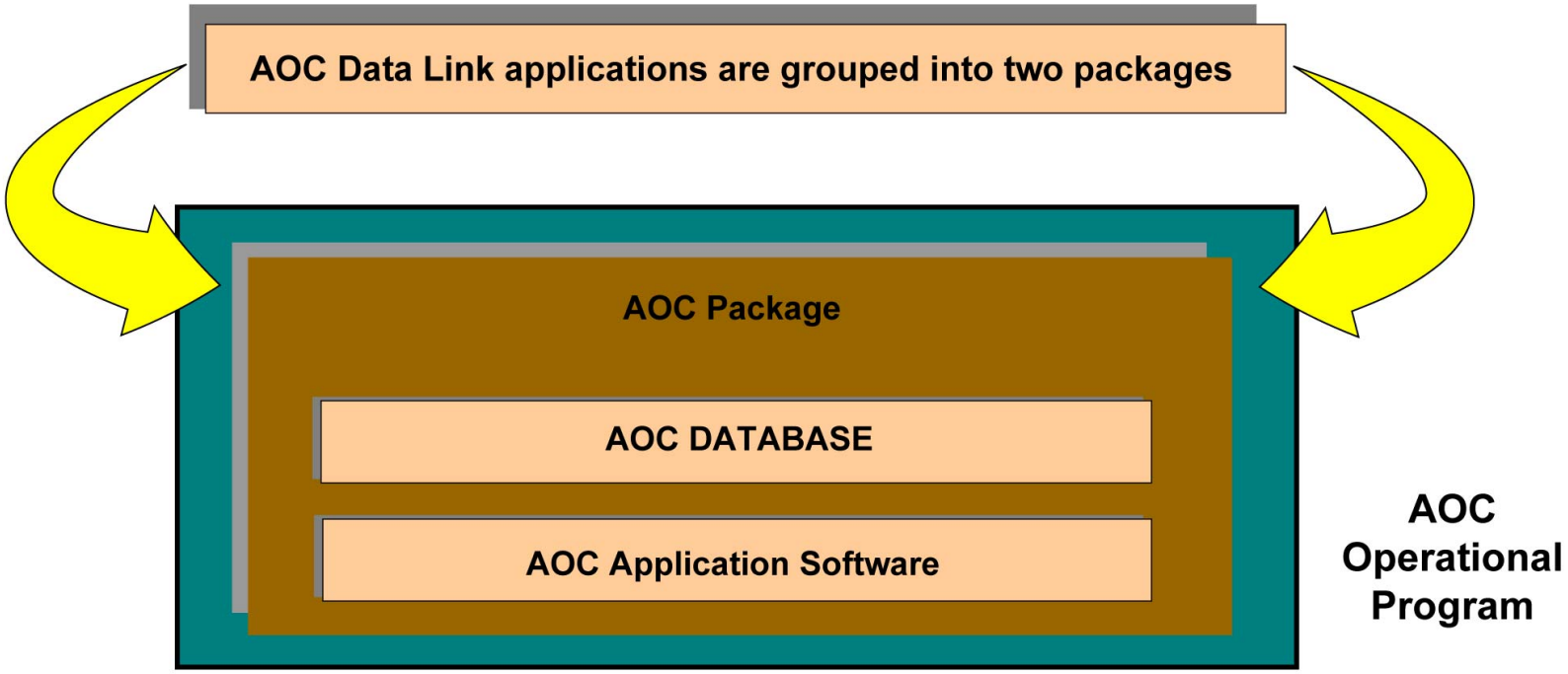

Note:

Airline Operational Communications (AOC) applications:

- Departure/Arrival times reports,
- Delay/Estimated time of arrival,
- Diversion/Return to gate reports,
- Gate assignment, operational messages (free text/preformatted), push back request, weather data, etc..

ATIMS DATA LINK APPLICATIONS - AOC APPLICATIONS PACKAGES

ATIMS LINE MAINTENANCE BRIEFING (2)

DATA LINK SERVICES

The Customization facility allows the A/L to optimize the transmission of downlink messages (cost, performance), by modifying database parameters without impact on the ATIMS Operational Program. It also allows the A/L to define one or several data link routing policies (VHF, HF, SATCOM) for all the downlink messages (except ATC messages), on a worldwide basis or per geographical area.
In a given geographic area, the ATSU shall transmit downlink messages through the current routing policy service which has the:
-Highest preference level
-If the service is available
-ATC communication as priority over AOC
For each geographic zone, it gives the list of all the VHF services available, and their related frequencies.

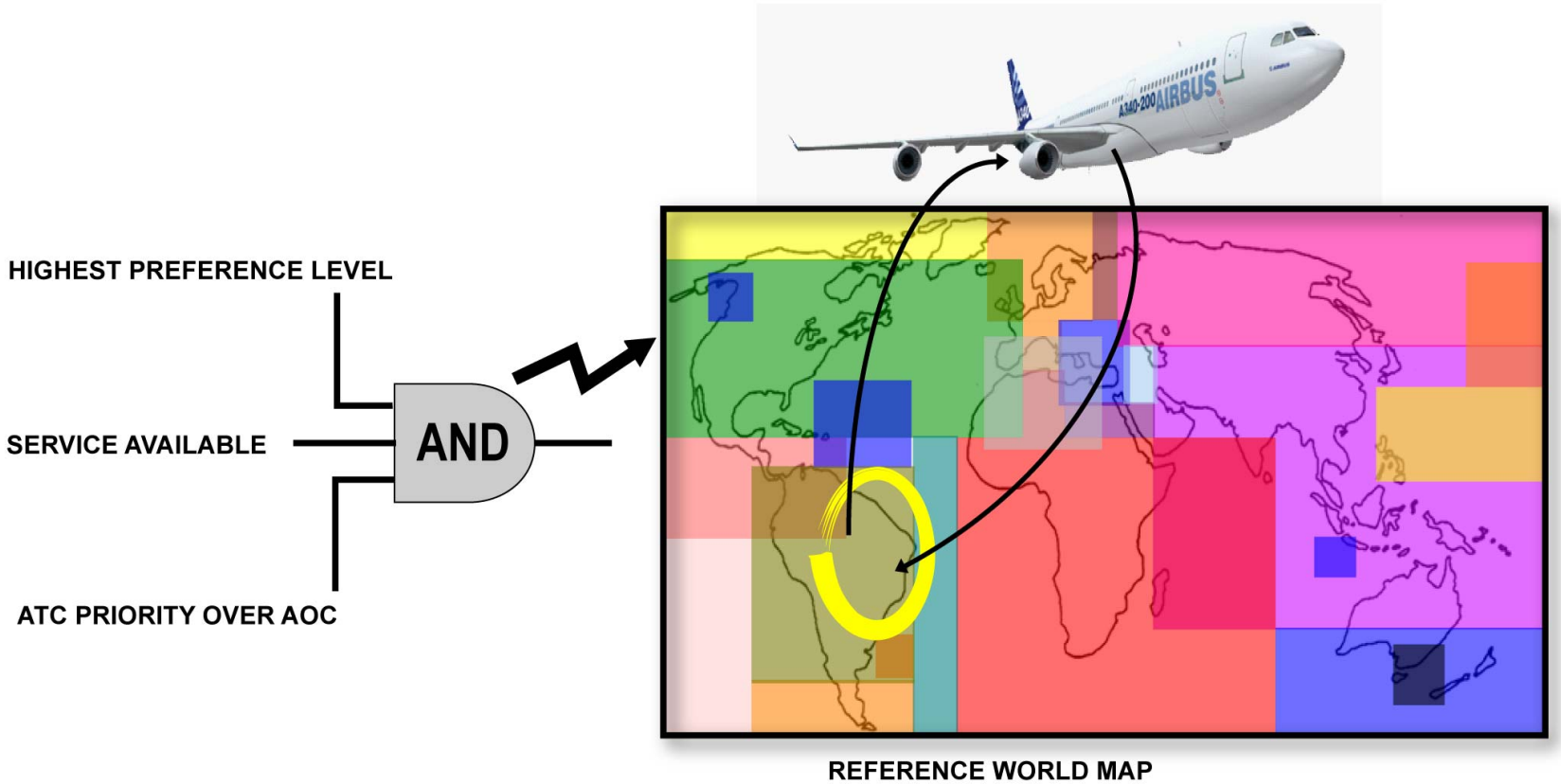

Note:
Example of DSP World Map in south-America:
- In Latin America,ARINC operates on 131.550 MHZ
- SITA operates on 131.725 MHZ

Even through there is an overlapping of those two Data Service Providers, if only ARINC America is selected on the scan-mask,ATSU will communicate with this DSP.

DATA LINK SERVICES

ATIMS LINE MAINTENANCE BRIEFING (2)

COCKPIT INDICATIONS

MCDU MENU

From the MCDU Menu, we get access to FMI (2), CMS, SAT and ATSU Sub-menus. The ATSU Sub-menu gives access to:
-ATC MENU
-AOC MENU
-COM MENU
ATSU Menu is, first, used to give the initialization of the ATSU, through the following steps:
-ATSU
-ATSU DATALINF
-COMM MENU
-COMM INIT

CHECK OF THE A/C REGISTRATION NUMBER (ARN)

After accessing the ATSU DATALINK page from the MCDU MENU page, press the COMM select key to display the COMM MENU page, then validate the task. Follow the procedure, press the COMM INIT select key to get access to the COMM INIT page and then validate the task.
Make sure that the ARN shown below the A/C REGISTR indication is correct.

NOTE: The ARN information is acquired from the Central Maintenance Computer (CMC). The task is complete.

G7508471 - G7OT0T0 - FM46B1000000001

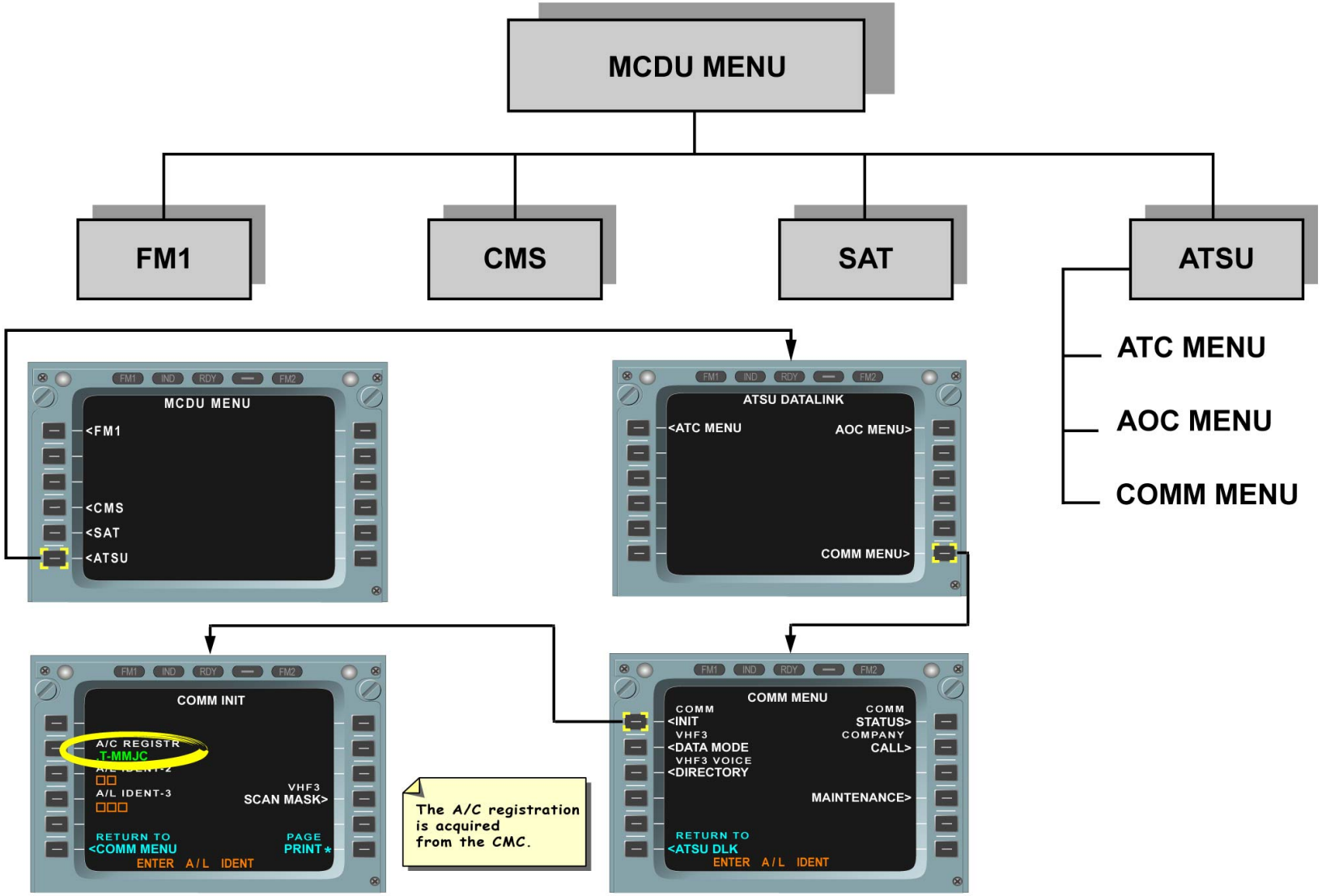

COCKPIT INDICATIONS - MCDU MENU & CHECK OF THE A/C REGISTRATION NUMBER (ARN)

G7508471 - G7OT0T0 - FM46B100000001

ATIMS LINE MAINTENANCE BRIEFING (2)

COCKPIT INDICATIONS (continued)

ECAM INDICATIONS

The ACARS STATUS is identified by means of messages displayed on the upper ECAM Display (EWD)
The ACARS FAULT is identified by means of messages displayed on the upper ECAM Display (EWD) and on the lower ECAM Display (SD).

G7508471 - G7OT0T0 - FM46B1000000001

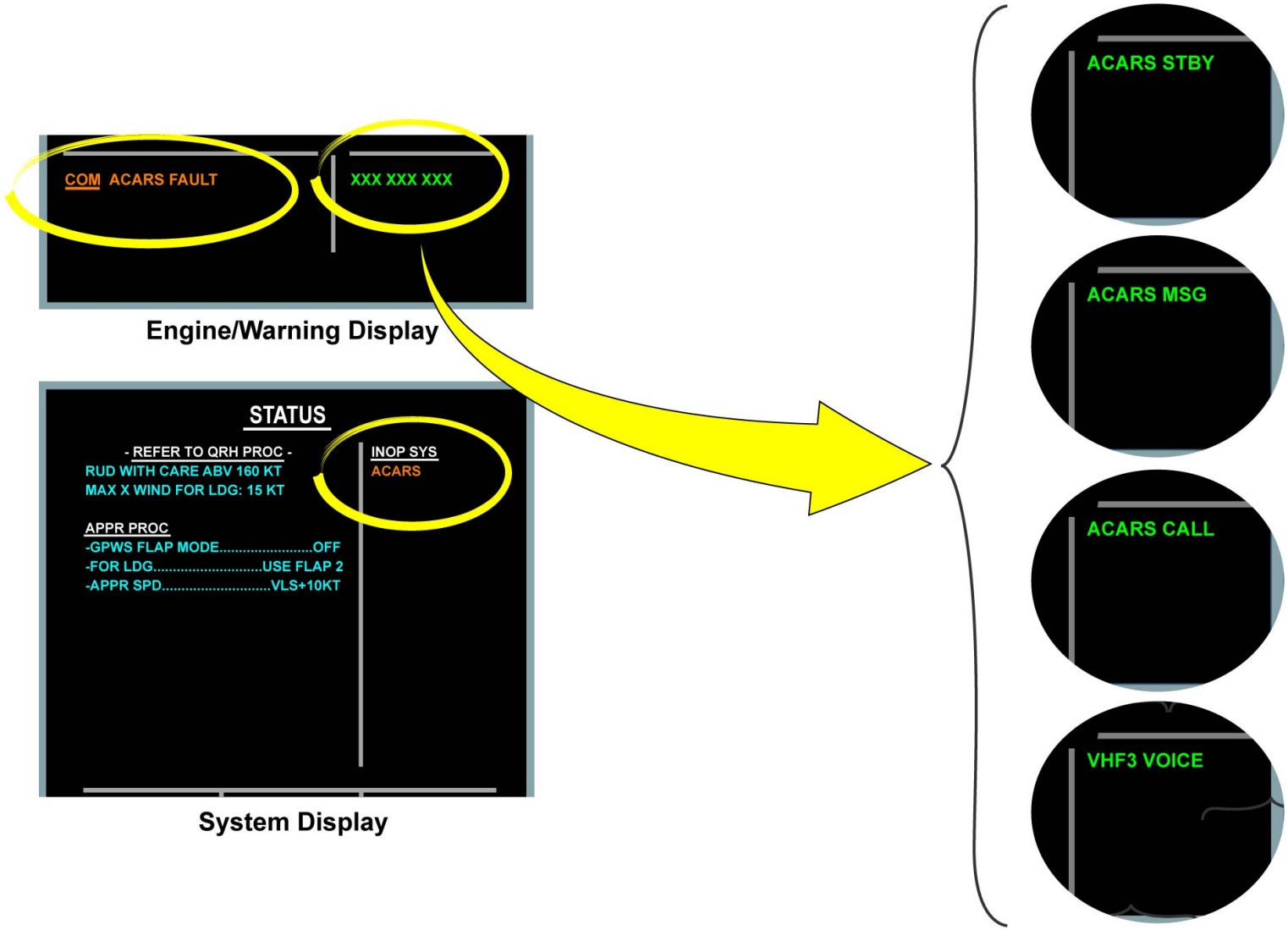

COCKPIT INDICATIONS - ECAM INDICATIONS

ATIMS D/O (3)

ATSU INTERFACES

The Air Traffic Service Unit (ATSU) is connected by an ARINC 429 type data bus to various peripherals. It is the core unit of the data exchange between the aircraft and the ground station. It ensures the proper routing of information to each end user.

ACARS COMMUNICATION

The ATSU / VHF Data Radio (VDR) 3 / High Frequency Data Radio (HFDR) 1 / Satellite Data Unit (SDU) interface is used for Aircraft Communication Addressing and Reporting System (ACARS) communication. It consists of a data block exchange, and a status transmission. The ATSU/Radio Management Panels (RMP) interface is used for indicating which entity between ATSU and RMP is controlling the VDR 3.

OPERATIONAL COMMUNICATION

The ATSU/Flight Management Guidance and Envelope Computers (FMGECs) interface is used for flight operational data exchanges:
- Airline Operation Control (AOC) hosted application for acquisition of operational data (such as origin/destination airport, flight number, fuel on board, etc),
- Air Traffic Control (ATC) application for navigation and flight management data for Automatic Dependent Surveillance (ADS) function.

The ATSU/MCDUs interface is used for man-machine interfaces. In the AOC application, this allows AOC mode selection, parameter entry (captain name, fuel units, etc), display of AOC specific information (AOC received messages, scratchpad messages, etc), and print command. In the air/ground communication functions, it allows display of router specific information, crew request for router modes of operation and parameter entry. It also gives print command.

MAINTENANCE AND ENGINEERING APPLICATIONS

The ATSU/Flight Warning Computers (FWCs) interface is used for warning information and for AOC application data. The ATSU/System Data Acquisition Concentrators (SDACs)/Display Management Computers (DMCs) interface is used for AOC application data. The ATSU acquires Universal Time Coordinated (UTC) time and date from the clock. The ATSU also receives GPS time from the Multi-Mode Receiver (MMR) 2. The ATSU/Flight Data Interface and Management Unit (FDIMU) interface is used for flight performance in up-link requests and downlink Aircraft Condition Monitoring System (ACMS) reports. The ATSU/Central Maintenance Computer (CMC) interface is used for maintenance purposes: for information concerning ATIMS internal or detected external failures, for up-link requests and down-link CMC reports and for AOC engineering application data. The ATSU sends printable data to the printer. The ATSU/data loader interface is used for loading data. The ATSU software can also be directly uploaded by a high data rate Portable Data Loader (PDL) through a connector located in the avionics compartment.

CABIN DATA EXCHANGE

The ATSU/Cabin Terminals (CT) interfaces are used for cabin administrative data exchanges in up-link requests and downlink reports. The cabin terminals include the Digital Interface Unit (DIU) and the Cabin Passenger Management Unit (CPMU).

AIRCRAFT LGCIU INPUT

The ATSU receives information from the Landing Gear Control and Interface Unit (LGCIU) to determine if the aircraft is on ground or in flight.

RESET

An ATSU reset switch is installed in the cockpit on the reset control panel to reset the ATSU.

G7508471 - G7OT0T0 - FM46D1000000002

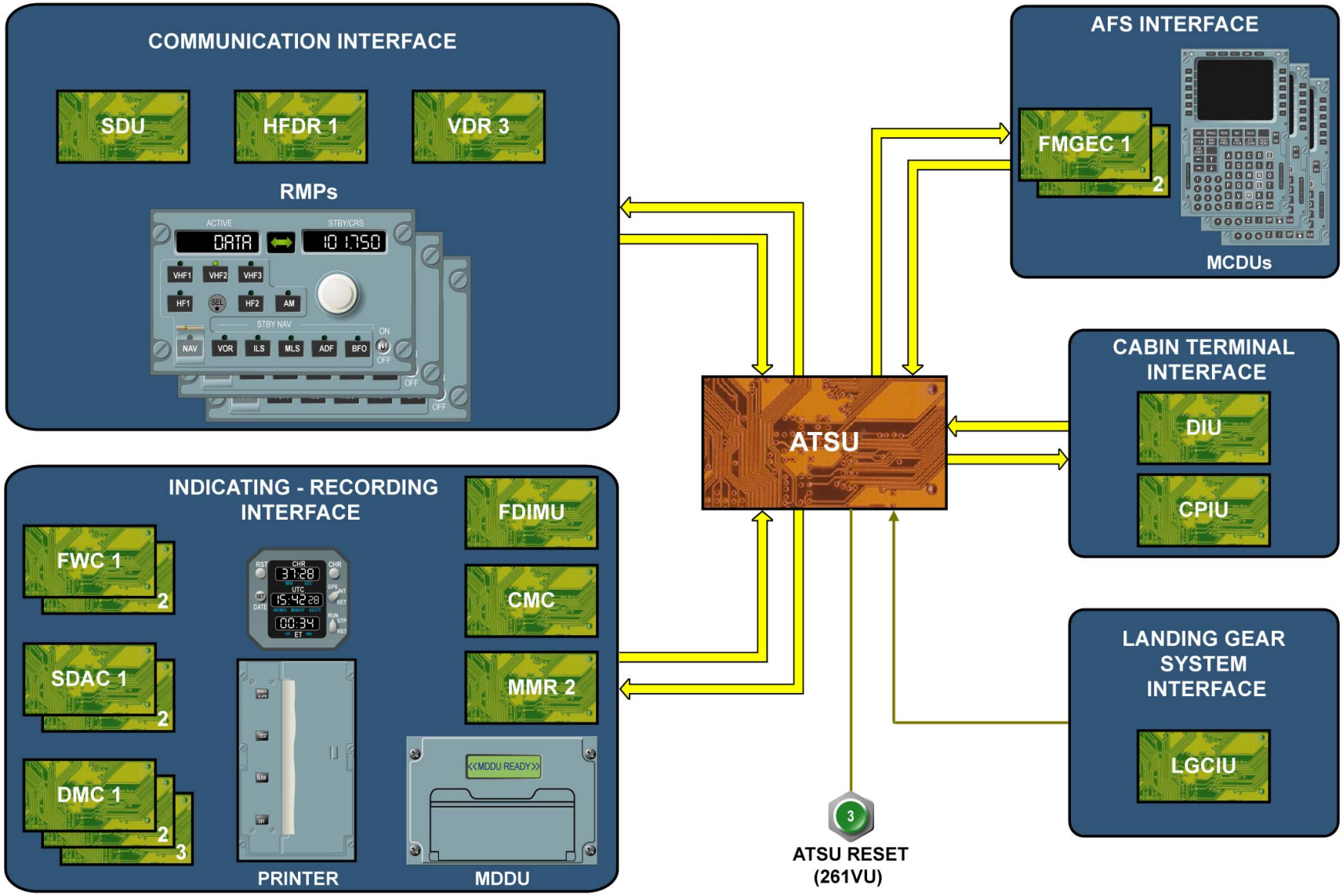

ATSU INTERFACES - ACARS COMMUNICATION ... RESET

G7508471 - G7OT0T0 - FM46D100000002

This Page Intentionally Left Blank

G7508471 - G7OT0T0 - FM46D1000000002

ATIMS D/O (3)

ATSU DESCRIPTION

The ATSU software is partitioned into two main parts:
- aircraft interface/host platform,
- data link applications.

A/C INTERFACE/HOST PLATFORM SOFTWARE CHARACTERISTICS

The aircraft interface / host platform is composed of four services:
- the air/ground communication services,
- the Human-Machine Interface (HMI),
- the on-board peripherals,
- the system management.

The air/ground communication is used for the management of the air/ground communication media such as the HFDR1, VDR3 and Satellite Communication (SATCOM).
The HMI is used for the management of the Communication Navigation Surveillance (CNS) / Air Traffic Management (ATM) cockpit interfaces (DCDU, MCDU, printer and alert function).
The on-board peripherals are used for the management of the communication exchanges with the on-board peripheral units: the FDIMU, the CMC, the Flight Management System (FMS) and the Cabin Terminal (CT).
The system management is used for the acquisition and broadcasting of peripheral computer data, management of data loader protocol and monitoring of the system (power supply and BITE functions).

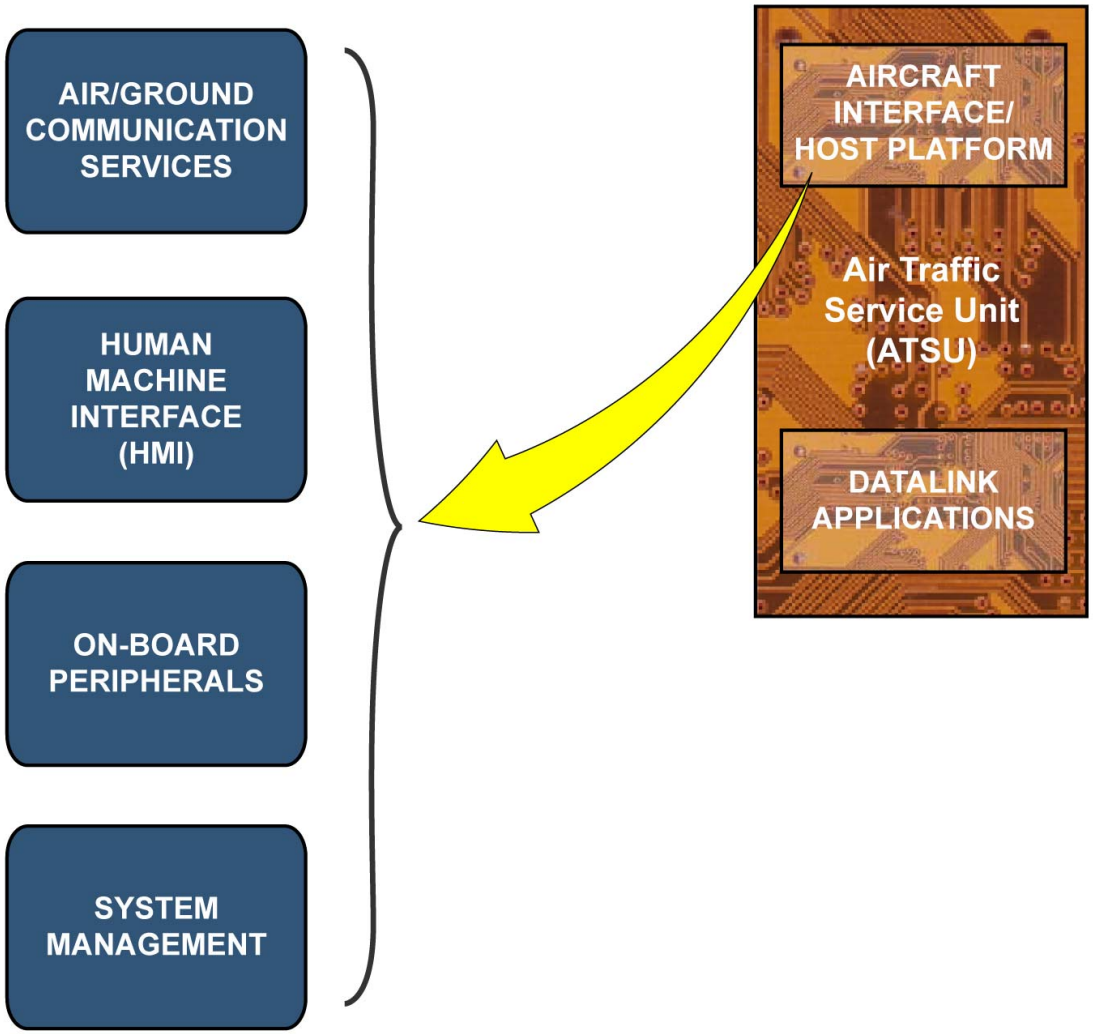

ATSU DESCRIPTION - A/C INTERFACE/HOST PLATFORM SOFTWARE CHARACTERISTICS

G7508471 - G7OT0T0 - FM46D100000002

ATIMS D/O (3)

ATSU DESCRIPTION (continued)

DATALINK APPLICATIONS

The data link applications include the ATC and the AOC. The ATC software is the same for all airlines and operators. The AOC software is highly customized and fulfills the airline operational and commercial requirements.
The ATC applications are dedicated to exchange data and information between the aircraft and the ATC centers. The ATC is composed of:
- ATS Facilities Notification (AFN), for connection with an ATC ground center,
- Controller Pilot Data Link Communication (CPDLC), which enables the dialog between the flight crew and the ATC by managing uplink and downlink messages,
- ADS, for aircraft path surveillance,
- Departure Clearance (DC), which gives automated assistance to request and deliver departure information and clearances,
- Oceanic Clearance (OC), which gives automated assistance to request and deliver an oceanic clearance from the oceanic ATC center prior to enter oceanic airspace,
- Automatic Terminal Information Service (ATIS), which lets the flight crew to request and obtain information on active terminal conditions such as runway, approach procedure, meteorological parameters (wind, visibility, weather, clouds, runway surface conditions...).
The AOC applications are dedicated to data communication services between the aircraft and the airline facility. The AOC is composed of:
- the remote AOC applications,
- the hosted AOC applications.
For the remote AOC applications, the ATSU only routes data to and from AOC peripherals. The remote AOC peripherals are:
- the FMS,
- the Central Maintenance System (CMS),
- the ACMS,
- the CT.
This routing is in charge of receiving ground messages and routing them to the right AOC peripheral. The ATSU also collects data and reports from various peripherals and ensures their broadcast to the ground.
The hosted AOC applications include standard and customized functions. They can be uploaded into the ATSU, once installed on the aircraft.
The software determines:
- the various AOC menu contents and displays,
- the processing, printing and display of all messages received from the AOC,
- the generation, triggering and sending of all messages.

G7508471 - G7OT0T0 - FM46D100000002

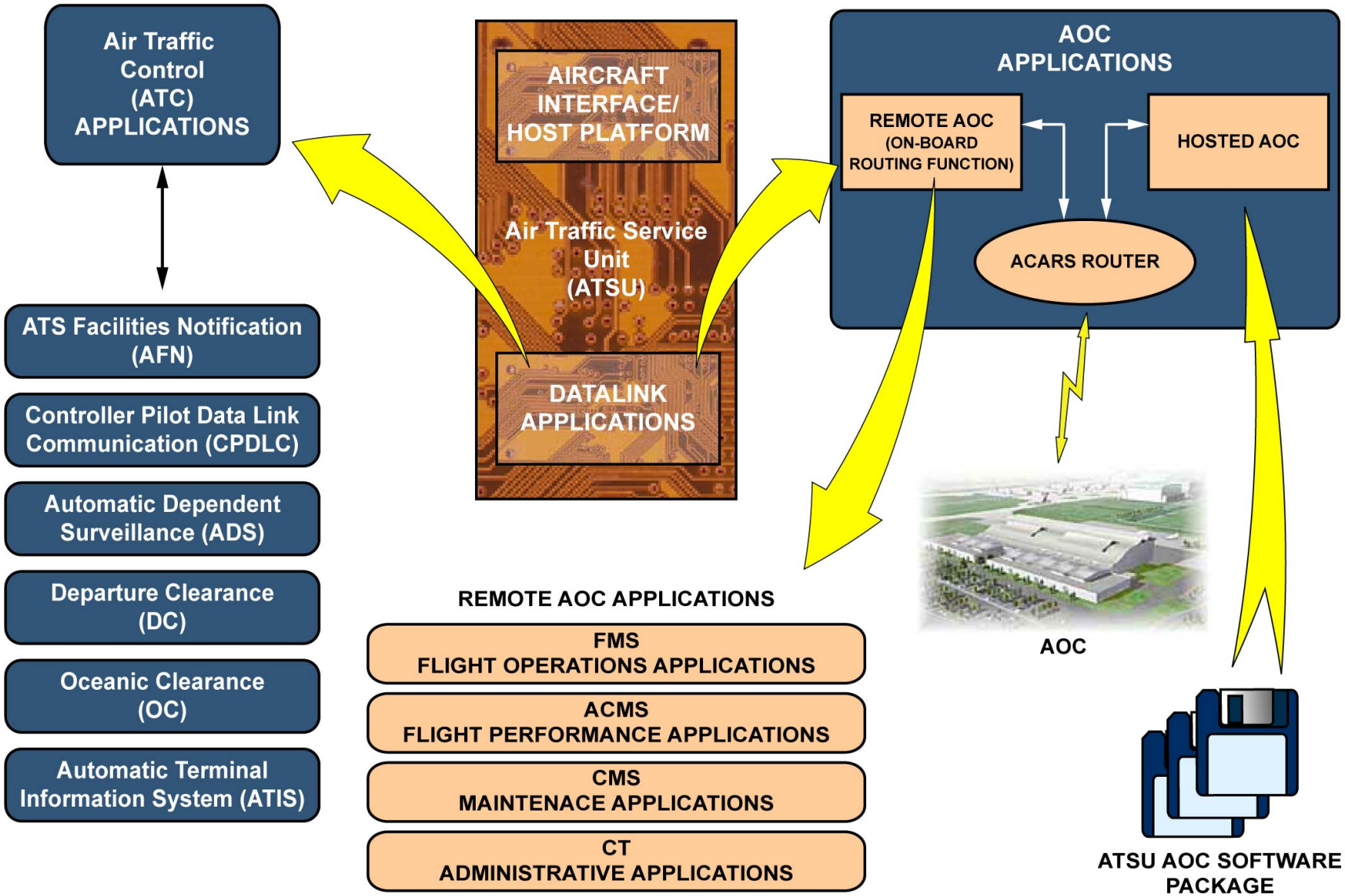

ATSU DESCRIPTION - DATALINK APPLICATIONS

G7508471 - G7OT0T0 - FM46D100000002

ATIMS D/O (3)

ATSU OPERATION

Software upload is necessary to enable complete ATSU operation. This can only be done on ground through the data loader. The ATSU software types are specific to the following functions:
- A/C interface/host platform software package,
- AOC application (customized),
- ATC applications.

Between each software type uploading, an ATSU data loader disconnection must take place. It allows re-initialization of the ATSU (this is indicated by the DATALINK ATSU FAULT warning going off).
The ATSU and the Datalink Control and Display Unit (DCDU) are supplied from the main bus bar. In case of ATSU failure, the voice mode is used as a backup.

G7508471 - G7OT0T0 - FM46D100000002

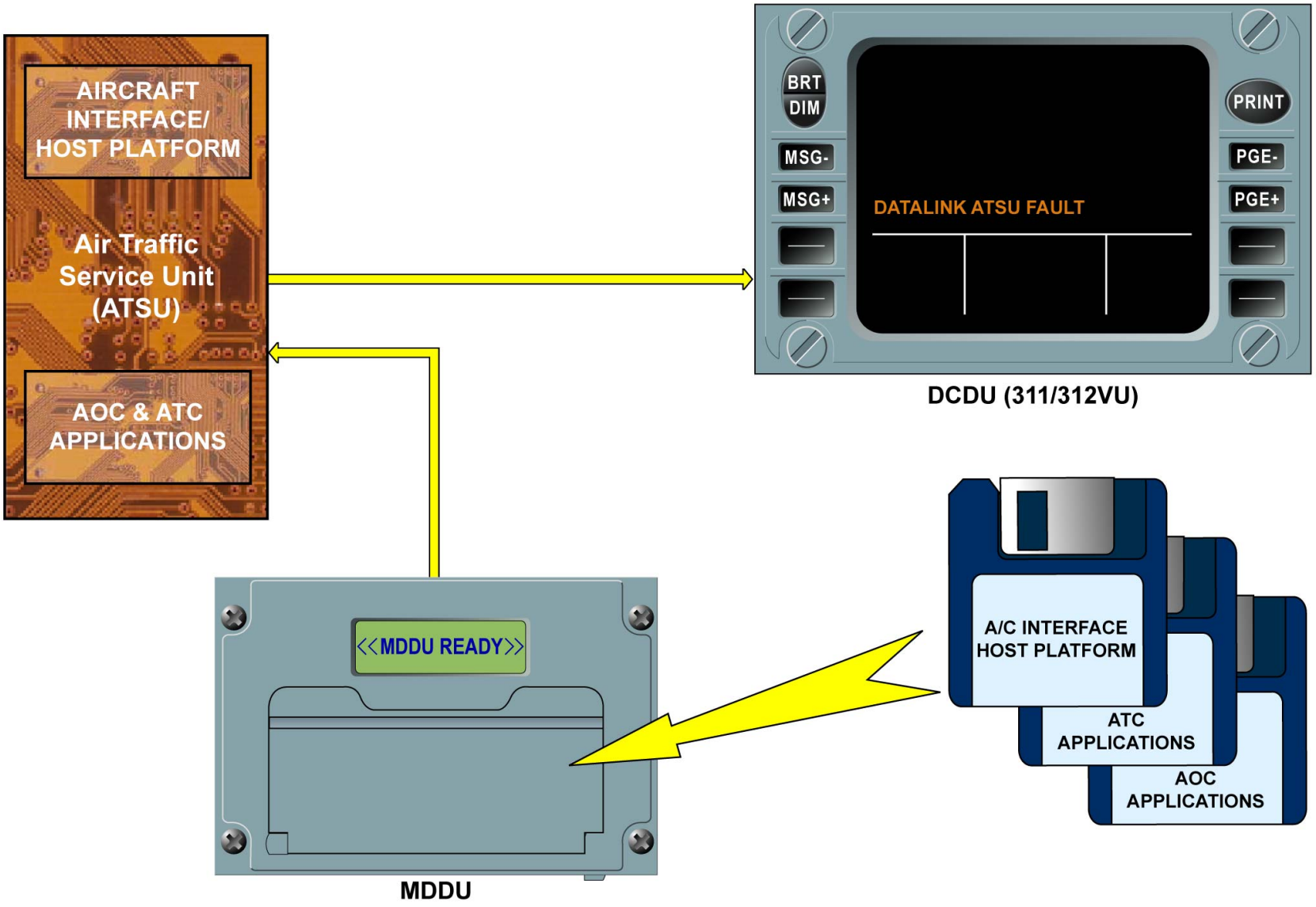

ATSU OPERATION

ATIMS MENU D/O (3)

ATSU MAIN TREE

The Air Traffic Service Unit (ATSU) line key of the MCDU menu gives access to:
- Communication functions of the ATSU,
- Airline Operational Control (AOC) hosted applications,
- Air Traffic Control (ATC) applications.

To get access to the COMM MENU:
-MCDU MENU page
-ATSU
-ATSU MENU with 3 sub-menus:
-ATC MENU
-AOC MENU
-COMM MENU
-COMM MENU with 6 sub-menus:
-COMM INIT
-VHF3 DATA MODE
-VHF3 VOICE DIRECTORY
-COMM STATUS
-COMPAGNY CALL
-MAINTENANCE

G7508471 - G7OT0T0 - FM46D200000002

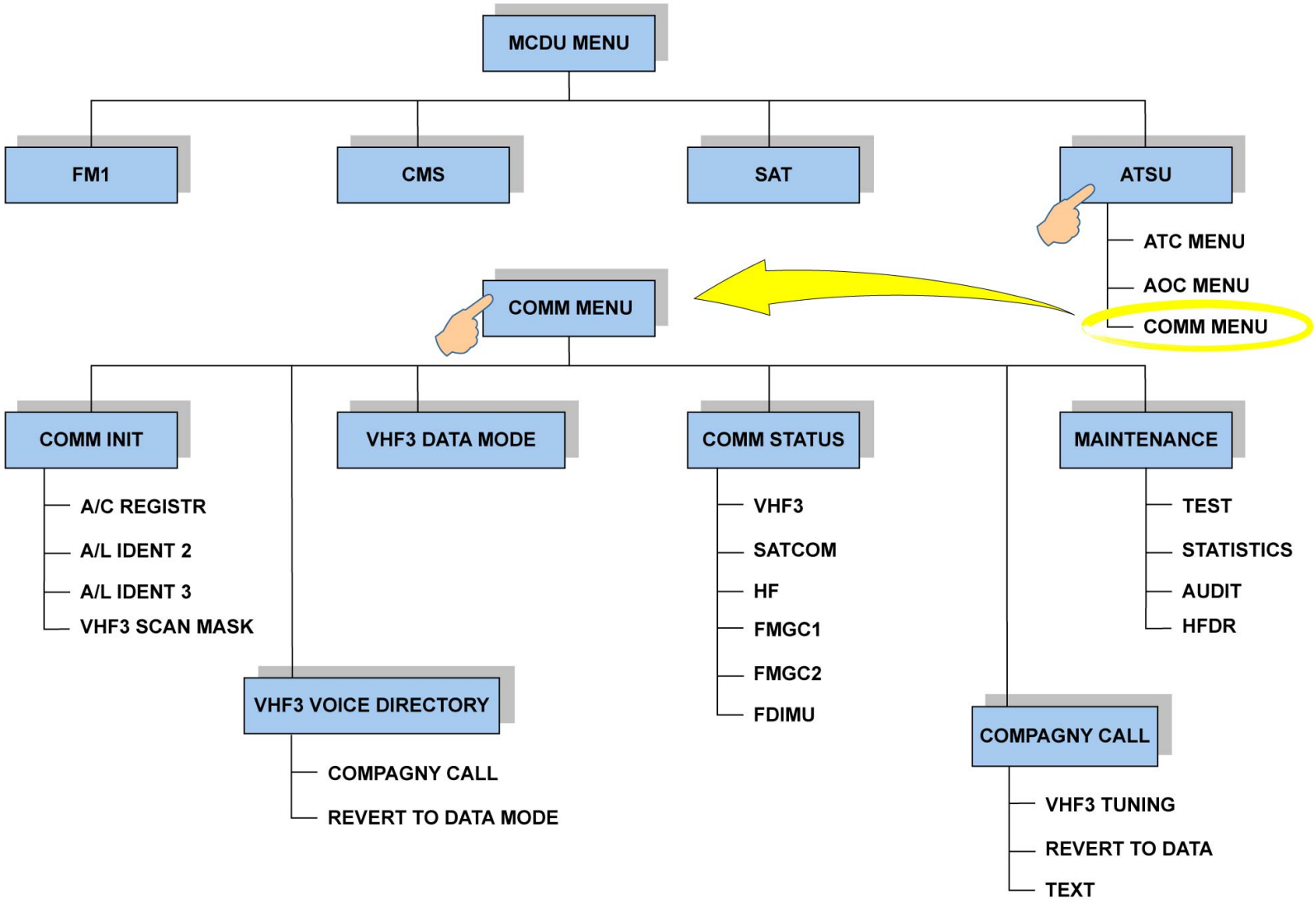

ATSU MAIN TREE

G7508471 - G7OT0T0 - FM46D200000002

ATIMS MENU D/O (3)

COMM MENU

From MCDU MENU:
- Push the ATSU line key: the ATSU DATALINK menu is presented
- Push the COMM MENU line key: the COMM menu is presented
- Push the COMM INIT line key: the COMM INIT menu is presented
- Push the VHF3 SCAN MASK line key: the DSP selection is available.

The COMM MENU is used for management and control of the air/ground router. The air/ground communication functions and services are active as soon as their initialization is complete.
The initializations (through COMM INIT menu) are considered as completed when the ATSU has received a valid Aircraft Registration Number (ARN), airline (A/L) identification and scan mask. The ARN and airline identification are used in the air/ground communication as aircraft addressing means.
The VHF3 SCAN MASK gives an ordered list of authorized service providers usable for data communications.

G7508471 - G7OT0T0 - FM46D200000002

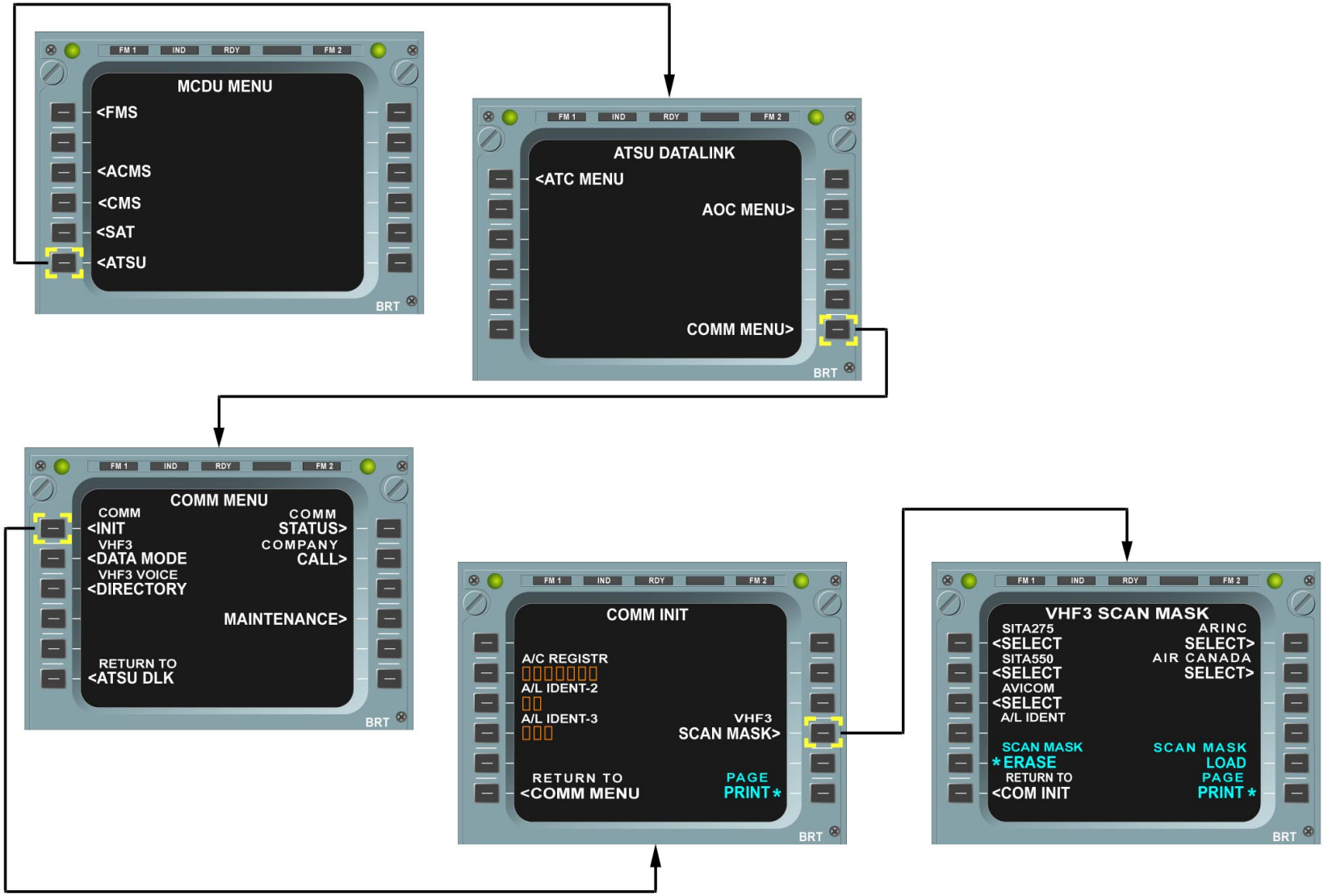
MCDU MENU
<FMS
<ACMS
<CMS
<SAT
<ATSU
ATSU DATALINK
<ATC MENU
AOC MENU>
COMM MENU>
COMM MENU
COMM
<INIT
COMM
STATUS>
VHF3
<DATA MODE
COMPANY
CALL>
VHF3 VOICE
<DIRECTORY
MAINTENANCE>
RETURN TO
<ATSU DLK
COMM INIT
A/C REGISTR
A/L IDENT-2
A/L IDENT-3
VHF3
SCAN MASK>
RETURN TO
<COMM MENU
PAGE
PRINT*
VHF3 SCAN MASK
SITA275
<SELECT
ARINC
SELECT>
SITA550
<SELECT
AIR CANADA
SELECT>
AVICOM
<SELECT
A/L IDENT
SCAN MASK
*ERASE
SCAN MASK
LOAD
RETURN TO
<COM INIT
PAGE
PRINT*

COMM MENU

ATIMS MENU D/O (3)

COMM MENU (continued)

COMM MENU OVERVIEW

From the COMM MENU:
- Push the VHF3 DATA MODE: VHF3 DATA MODE menu is presented, the list of the selected DSPs is displayed in Cyan color and the ACTIVE DSP is displayed in Green color.
- Push the VHF3 VOICE DIRECTORY line key: Operating frequencies are displayed.
- Push the COMM STATUS line key: The status of the communication medias (VHF, HF, SATCOM) is displayed.

The COMM MENU MCDU page allows access to the VHF3 VOICE DIRECTORY page, which is used:
- to display a voice frequency directory,
- to activate one of these frequencies,
- to select the data mode,
- to activate the voice frequency contained in the last received company call,
- to manually enter a frequency.

The COMM MENU MCDU page allows access to the COMM STATUS page, which is used to check the communication status of the ATSU:
- the air/ground communication media status: VHF3, HF1 and Satellite Communication (SATCOM), if installed,
- the on-board peripherals communication (router) status.

G7508471 - G7OT0T0 - FM46D200000002

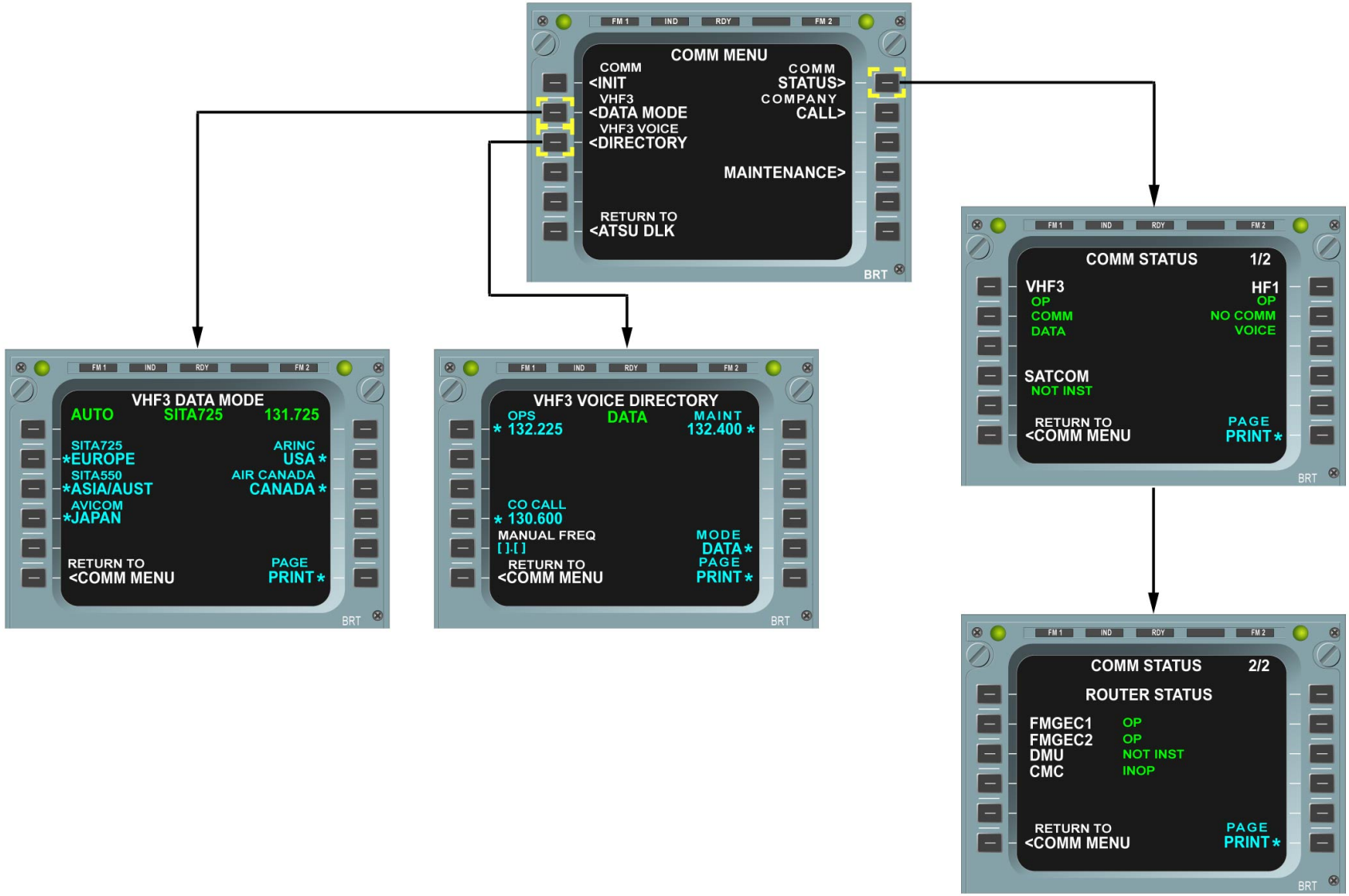

COMM MENU - COMM MENU OVERVIEW

G7508471 - G7OT0T0 - FM46D200000002

ATIMS MENU D/O (3)

COMM MENU (continued)

MAINTENANCE MENU

From the COMM MENU:
- Push the MAINTENANCE line key: The MAINTENANCE MENU is presented.
- Push the TEST line key: The communication transceivers test is available.
- Push the STATISTICS line key: Statistics of transceivers and router are available.
- Push the AUDIT line key: the AUDIT (Engineering) functions are available.

The COMM MENU MCDU page allows access to the MAINTENANCE menu, which comprises three functions:
- TEST function, which is used to test the link between the communication media (VHF3, HF and SATCOM) and the ground,
- STATISTICS function, which enables media and router statistics (number of up linked messages, number of down linked messages, etc) to be visualized,
- AUDIT function, to print out exchanged messages per media and router, depending on the selection. If ON is selected, all exchanged messages during the flight will be printed.

G7508471 - G7OT0T0 - FM46D200000002

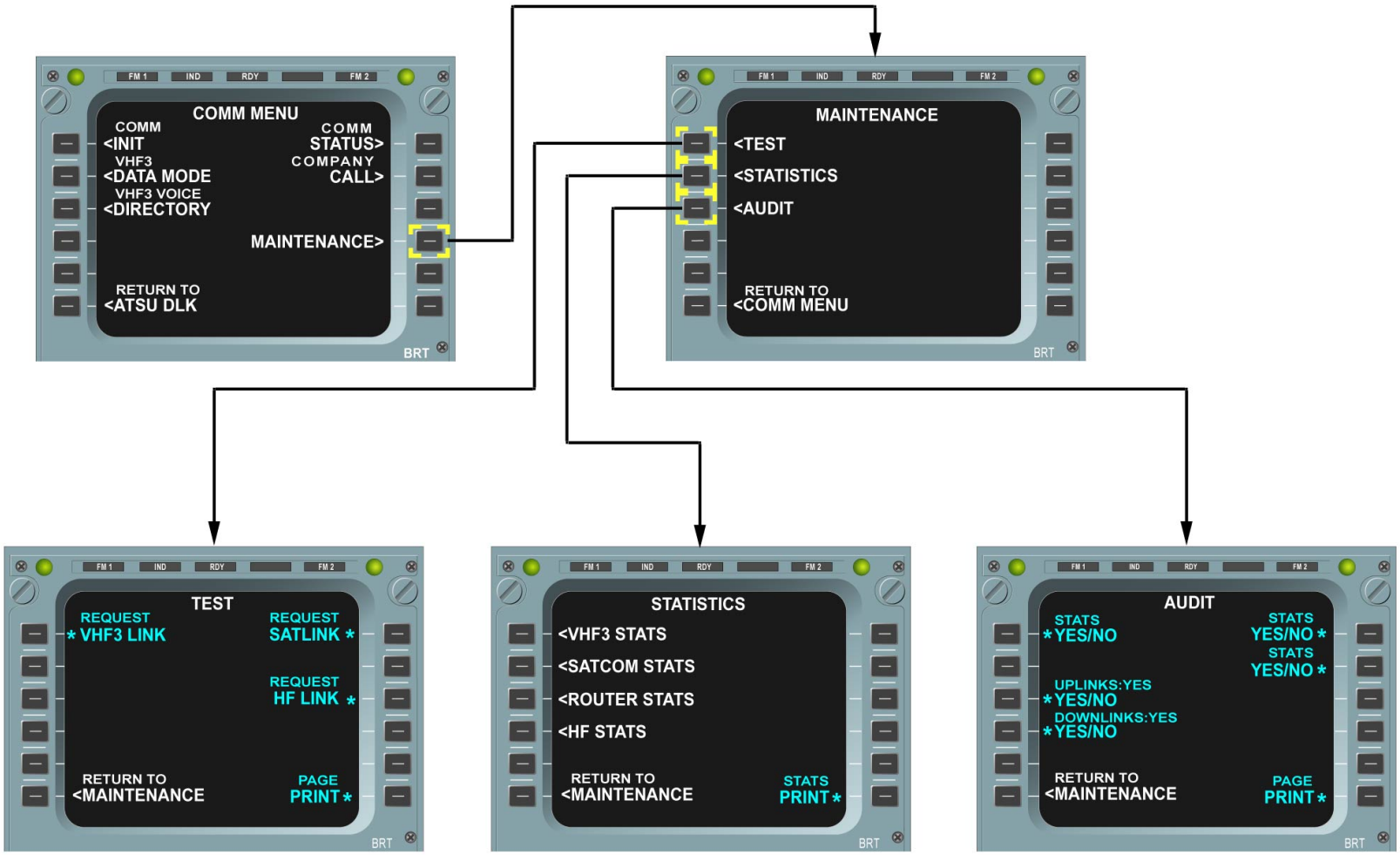

COMM MENU - MAINTENANCE MENU

ATIMS MENU D/O (3)

ATC MENU

From the MCDU MENU:
- Push the ATC COMM key-board P/B: the ATSU DATALINK MENU is shown.
- Push the ATC MENU line key: the ATC MENU 1/2 is shown.
- Push the next page key-board arrow: the ATC MENU 2/2 is shown.
- Push the DEPART REQ line key: Departure data are displayed.
- Push the OCEANIC REQ line key: Oceanic data are displayed.

The ATC MENU page 2 gives access to the DEPARTURE REQuest page, which gives automated assistance to request and deliver departure information and clearances.
The ATC MENU page 2 gives access to the OCEANIC REQ page, which gives automated assistance to request and deliver an oceanic clearance from the oceanic ATC center prior to enter oceanic airspace.
The ATC MENU page 2 gives access to the ATIS MENU page to request and obtain information on active terminal conditions, such as runway, approach procedure, meteorological parameters (wind, visibility, weather, clouds, runway surface conditions...).

G7508471 - G7OT0T0 - FM46D200000002

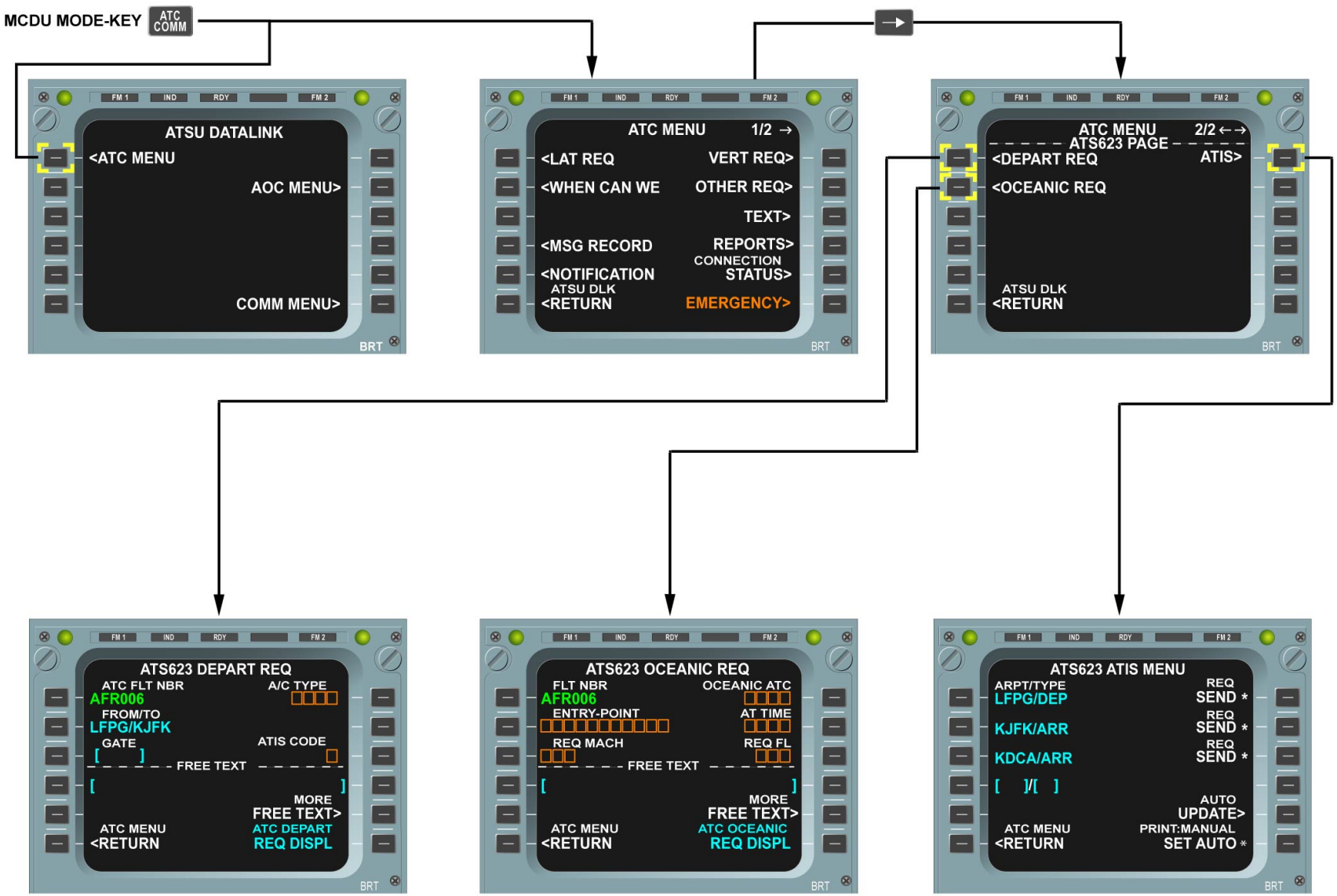

ATC MENU

G7508471 - G7OT0T0 - FM46D200000002

ATIMS MENU D/O (3)

AOC MENU

From the MCDU MENU:
- Push the ATSU line key: the ATSU DATALINK MENU is shown.
- Push the AOC line key: the AOC MENU is shown.

Depending on the aircraft flight phase relateded to specific conditions, 3 sub-menus are shown:
- AOC PRE-FLIGHT MENU used to do the flight preparation.
- AOC IN-FLIGHT MENU used to monitor and control the communications.
- AOC POST-FLIGHT MENU with a restricted access used when the aircraft is on ground.

G7508471 - G7OT0T0 - FM46D200000002

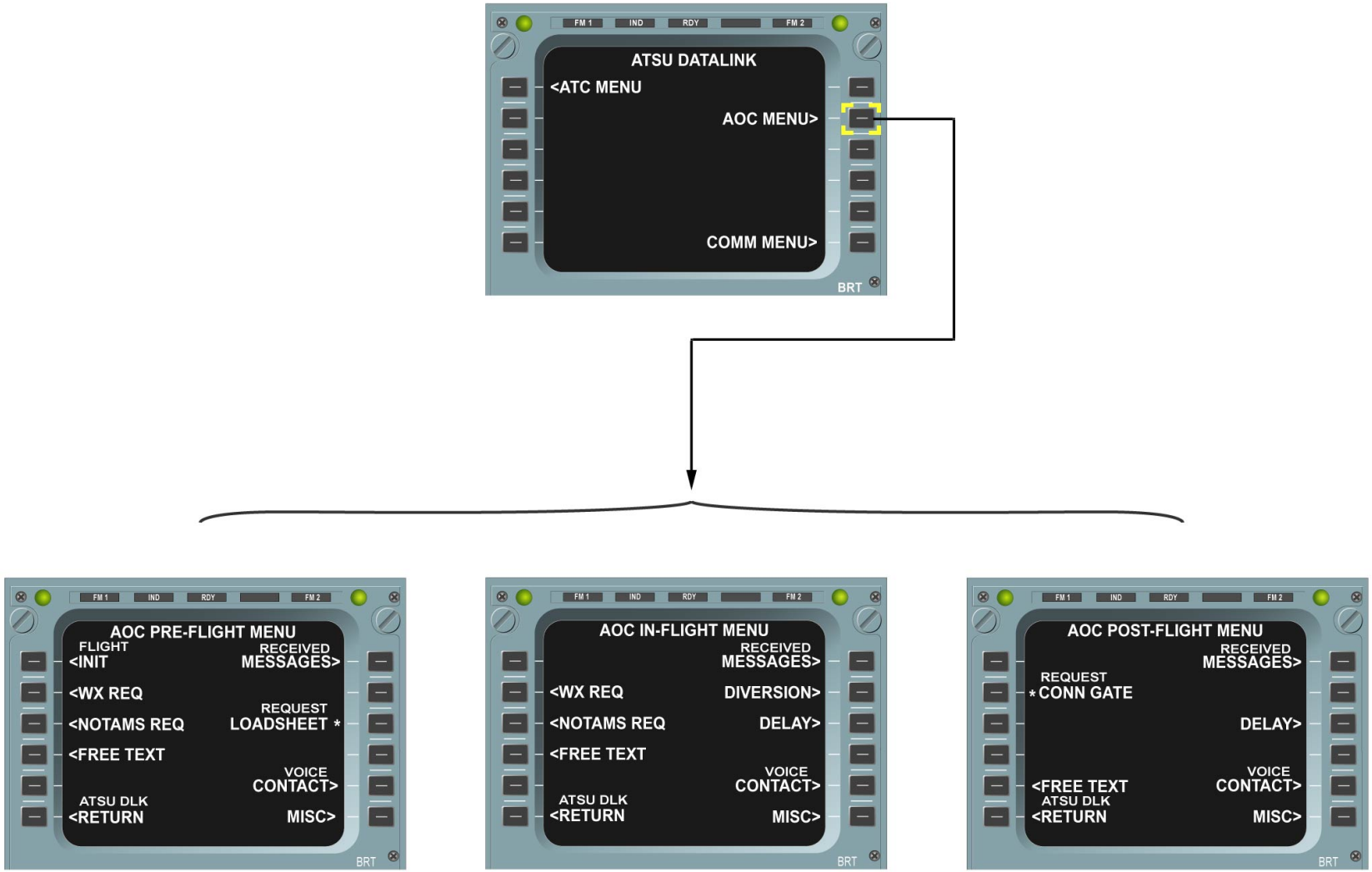
FM 1
IND
RDY
FM 2
ATSU DATALINK
<ATC MENU
AOC MENU>
COMM MENU>
BRT
AOC PRE-FLIGHT MENU
FLIGHT
<INIT
RECEIVED
MESSAGES>
<WX REQ
REQUEST
<NOTAMS REQ
LOADSHEET *
<FREE TEXT
VOICE
CONTACT>
ATSU DLK
<RETURN
MISC>
AOC IN-FLIGHT MENU
RECEIVED
MESSAGES>
<WX REQ
DIVERSION>
<NOTAMS REQ
DELAY>
<FREE TEXT
VOICE
CONTACT>
ATSU DLK
<RETURN
MISC>
AOC POST-FLIGHT MENU
RECEIVED
MESSAGES>
REQUEST
* CONN GATE
DELAY>
VOICE
<FREE TEXT
CONTACT>
ATSU DLK
<RETURN
MISC>

AOC MENU

ATIMS MENU D/O (3)

AOC MENU (continued)

MISC MENU

The MISC MENU is available inside any of these 3 selected sub-menus.
The AOC PRE-FLIGHT MENU allows access to the AOC MISCELLANEOUS page. The "MISC" page helps in the installation and troubleshooting of the AOC system. This page shows the AOC configuration to check which correct AOC software and/or database has been successfully loaded into the ATSU. It also displays the current settings for the Central Maintenance Computer (CMC) reporting options.

G7508471 - G7OT0T0 - FM46D200000002

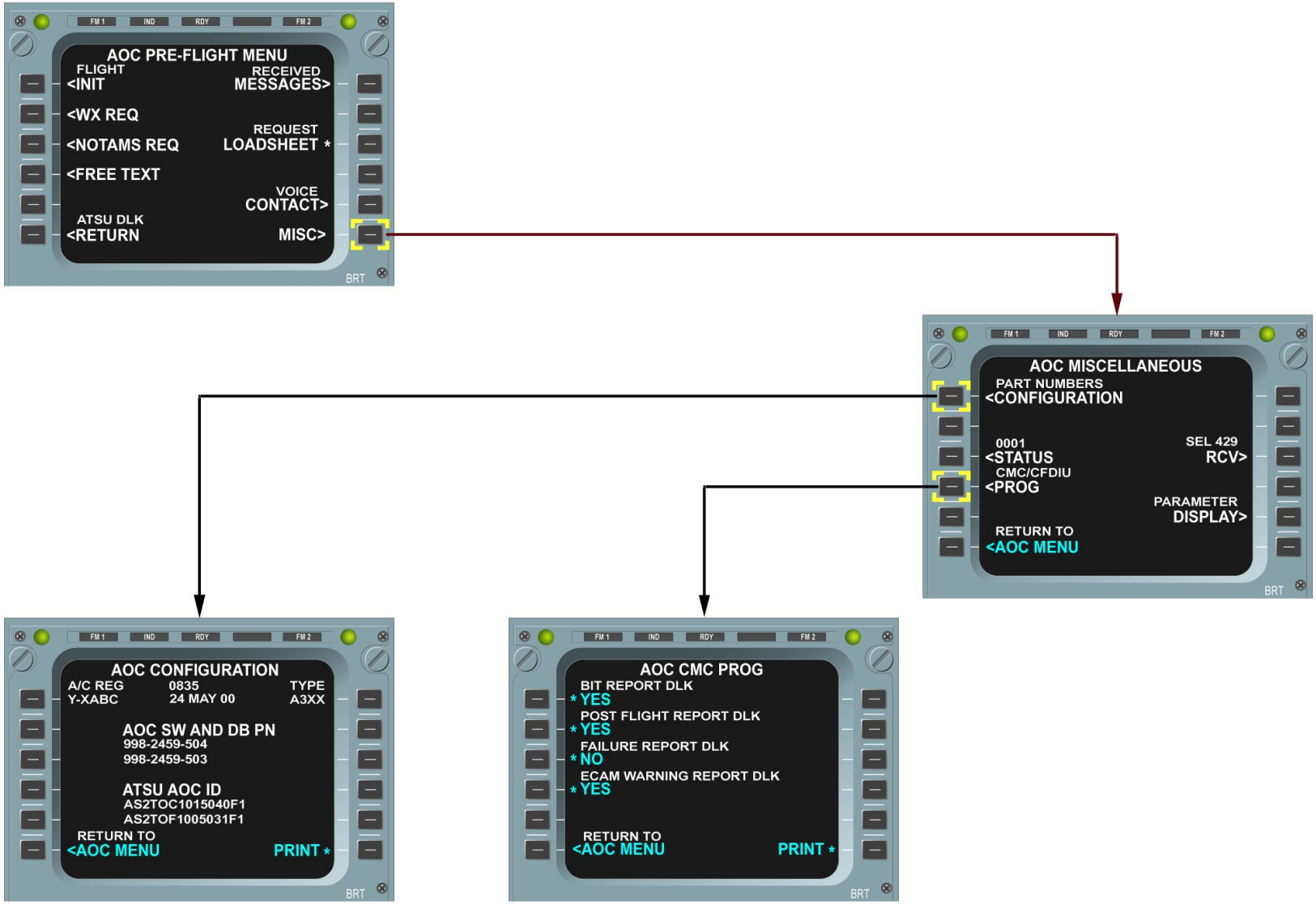

AOC MENU - MISC MENU

G7508471 - G7OT0T0 - FM46D200000002

ATIMS MENU D/O (3)

STEP-BY-STEP PROCEDURES (EXAMPLES)

Some examples of Step-by-Step procedures:
1: Initialization Procedure of the ATSU Router.
2: Operational Test of the ATSU.
3: VHF3 Link test of the ATSU.

G7508471 - G7OT0T0 - FM46D200000002

Some examples of Step-by-Step procedures:

1: Initialization Procedure of the ATSU Router

2: Operational Test of the ATSU

3: VHF3 Link test of the ATSU

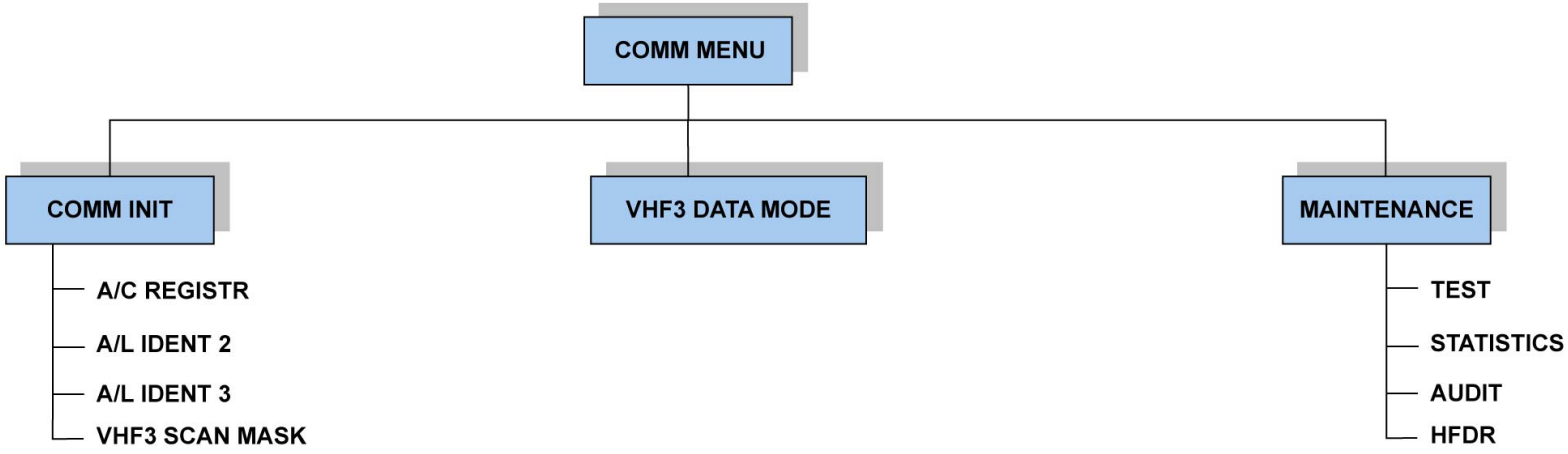

STEP-BY-STEP PROCEDURES (EXAMPLES)

G7508471 - G7OT0T0 - FM46D200000002

ATIMS MENU D/O (3)

STEP-BY-STEP PROCEDURES (EXAMPLES) (continued)

INITIALIZATION OF THE ATSU ROUTER

This procedure, called initialization of the ATSU Router, Enables to active the Air-ground communications functions and services of the ATSU. Three Essential parameters are required:
- A valid flight ident,
- An A/C Registration Number (ARN),
- A valid scan mask.

Push the ATSU line key: the ATSU DATALINK page is displayed.
Push the COMM MENU line key: the COMM MENU page will be displayed.
Push the COMM INIT line key: The COMM INIT page is displayed.
Push the CLR line key: The COMM INIT previous data are erased.
The A/C Registration Number is sent by the CFDIU. The ATSU creates the flight ident by to connect/ to link together the airline ident parameter and the flight number parameter coming from the FMS. The airline ident is not available and must be entered.
Enter the A/L IDENT.
Note:
- A/L IDENT2: For ATC recognition.
- A/L IDENT3: For AOC recognition.

Push the VHF SCAN MASK line key: VHF3 SCAN MASK pages will be displayed.
Push the CLR key: the "ENTER VHF3 SCANMASK" information disappears (Amber).
Push VHF3 SCANMASK line key: VHF3 SCANMASK pages will be displayed.
The VHF scan mask gives an ordered list of service providers usable for VHF data communications. There is the possibility for the operator to define two service providers by entering a password in the scratchpad and by pushing the line key 2R and 3R. The ALL inputs Erase function allows to erase the previous selection.
Push the NEXT PAGE line key: VHF SACN MASK page 1/2 will be displayed.
Push the ALL INPUTS ERASE line key: previous DSP will be erased.
The Scan mask must be a prioritized list of VHF service providers contracted by the airline.
Push the NEXT PAGE key: the VHF SCAN MASK 1/2 is retrieved.
Select the SITA-EUROPE DSP: This DSP is selected (Example).
Select Air Canada DSP: This DSP is selected.
Push the SCAN MASK ACTIVATE line key: All selected DSPs will be activated.
Push the RETURN TO COMM INIT line key: the COMM INIT MENU will be displayed. The initialization of the ATSU Router is now completed and the ACARS STBY memo goes off.
Last check in the VHF3 DATA MODE menu:
Push the RETURN TO COMM MENU line key: the COMM MENU page is displayed.
Push the VHF3 DATA MODE line key: the VHF3 DATA MODE will be displayed.
The VHF3 DATA MODE page displays the Data link Service Providers selected in the VHF3 SCAN MASK menu. SCAN indication means that the Data frequency is not yet tuned (the software is scanning selected DSPs). The AUTO indication means that the DATA frequency is now tuned.
Push the RETURN TO COMM MENU line key: COMM MENU page will be displayed.
Push the RETURN TO ATSU DLK line key: The ATSU DATALINK main menu is displayed.
Initialization procedure is completed.

G7508471 - G7OT0T0 - FM46D200000002

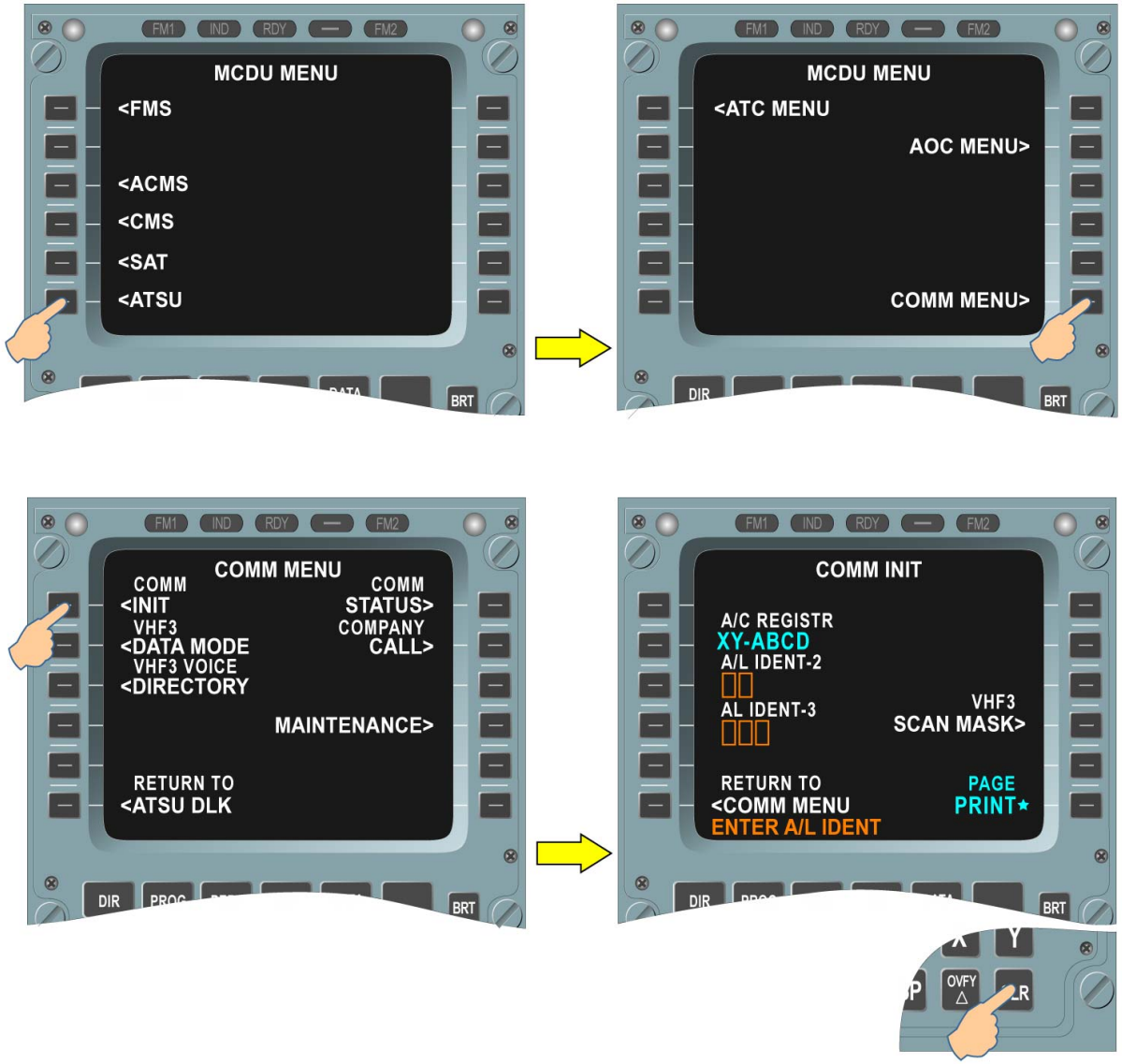

STEP-BY-STEP PROCEDURES (EXAMPLES) - INITIALIZATION OF THE ATSU ROUTER

G7508471 - G7OT0T0 - FM46D200000002

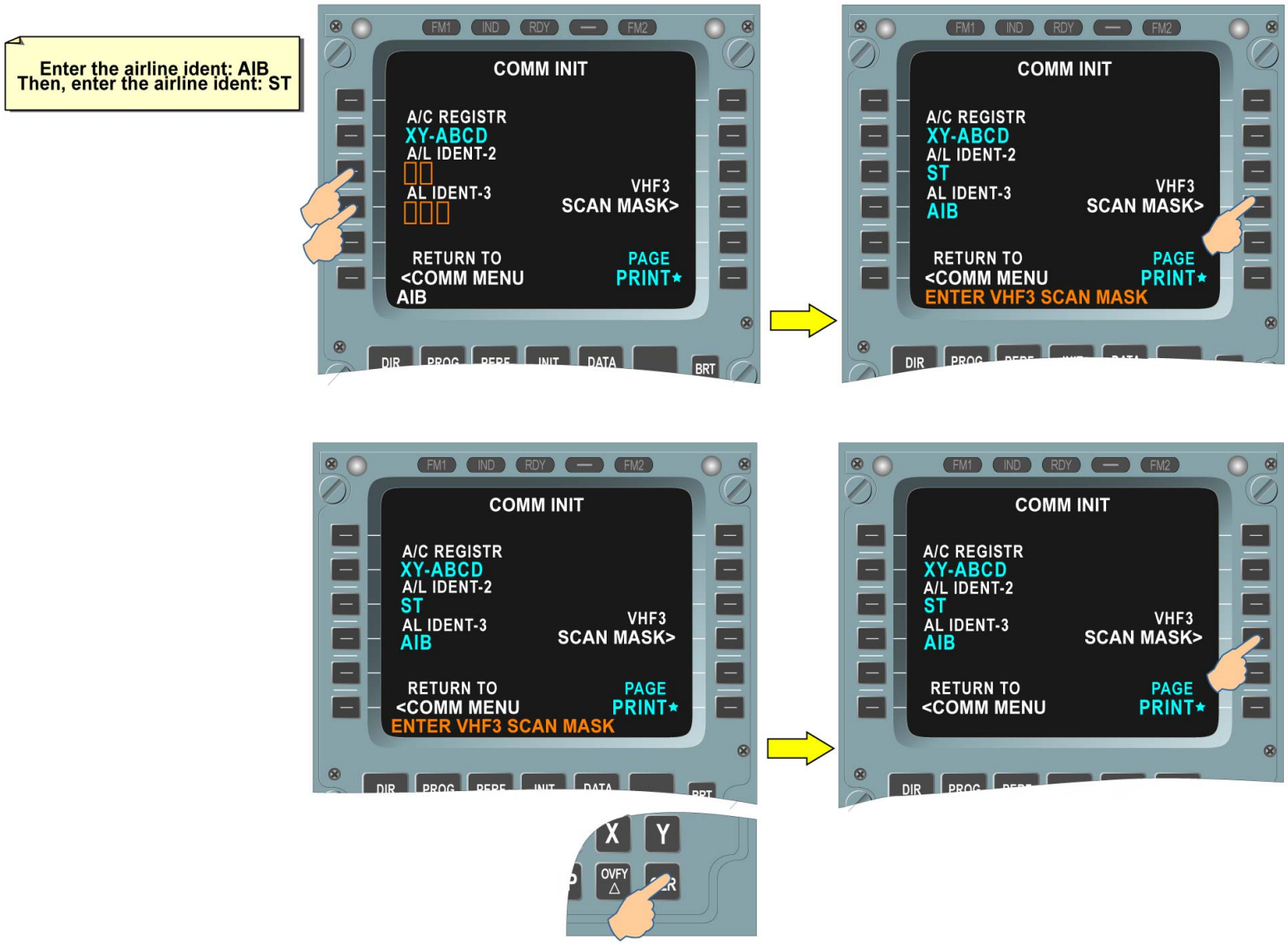

STEP-BY-STEP PROCEDURES (EXAMPLES) - INITIALIZATION OF THE ATSU ROUTER

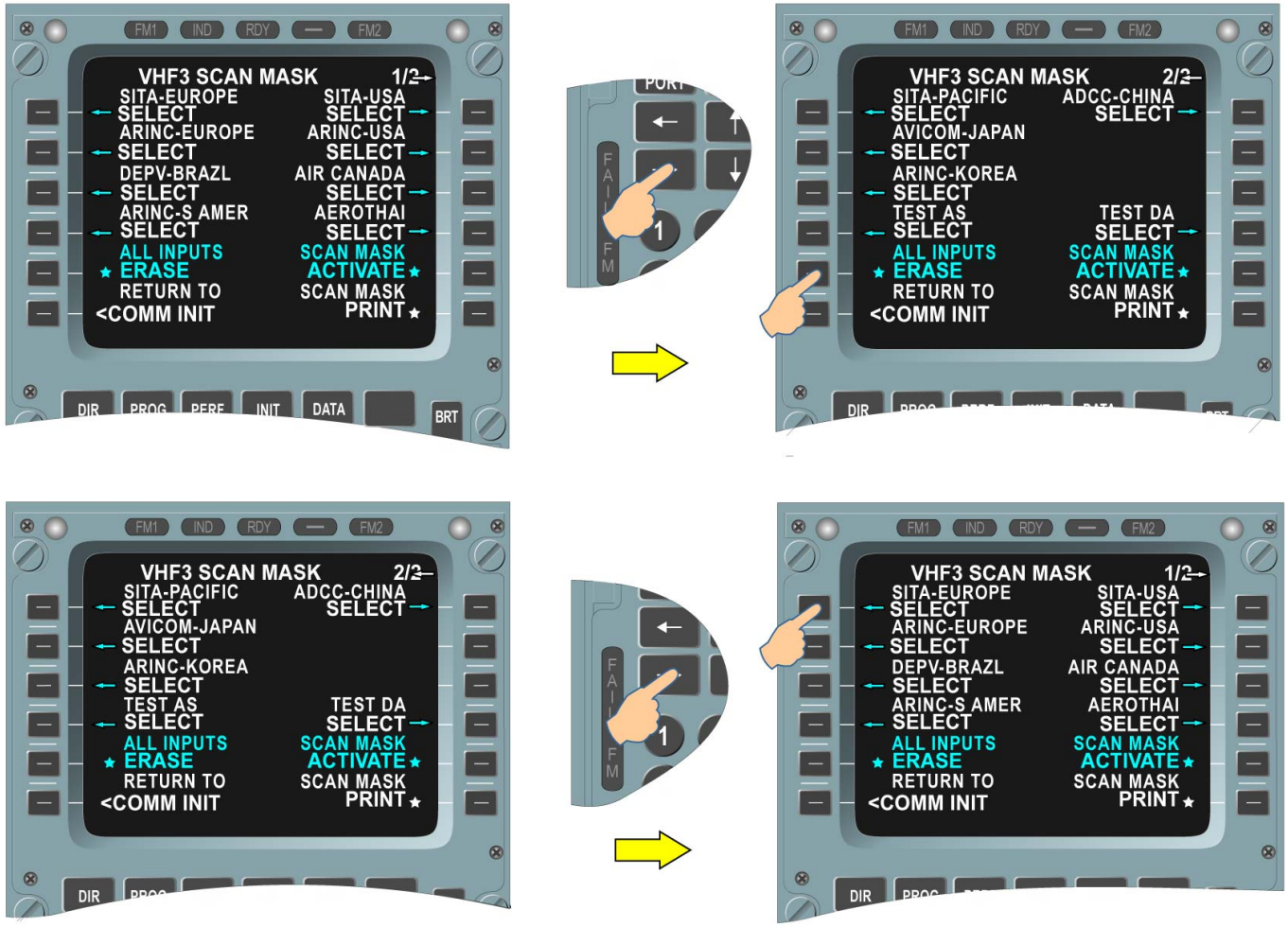

STEP-BY-STEP PROCEDURES (EXAMPLES) - INITIALIZATION OF THE ATSU ROUTER

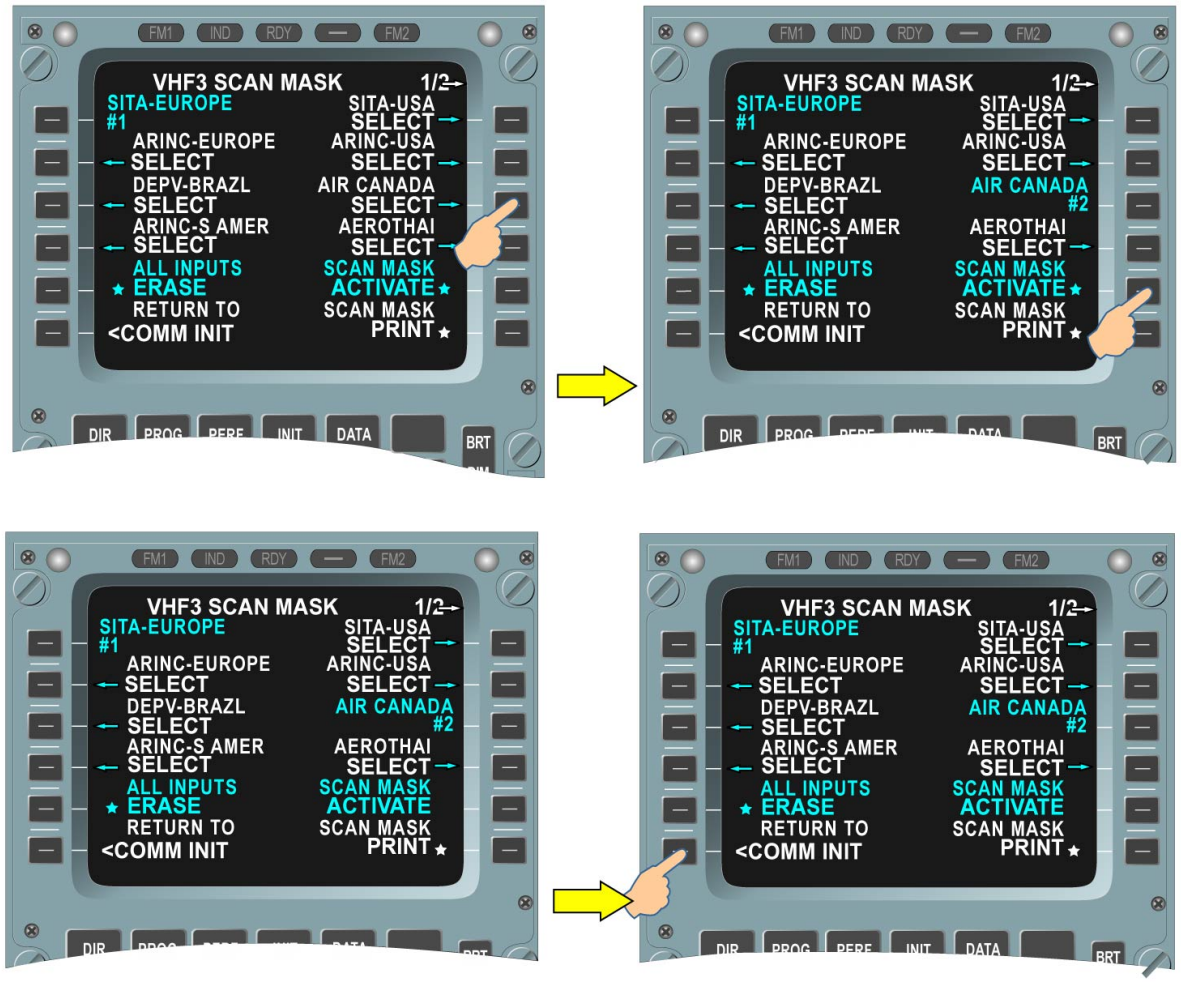

STEP-BY-STEP PROCEDURES (EXAMPLES) - INITIALIZATION OF THE ATSU ROUTER

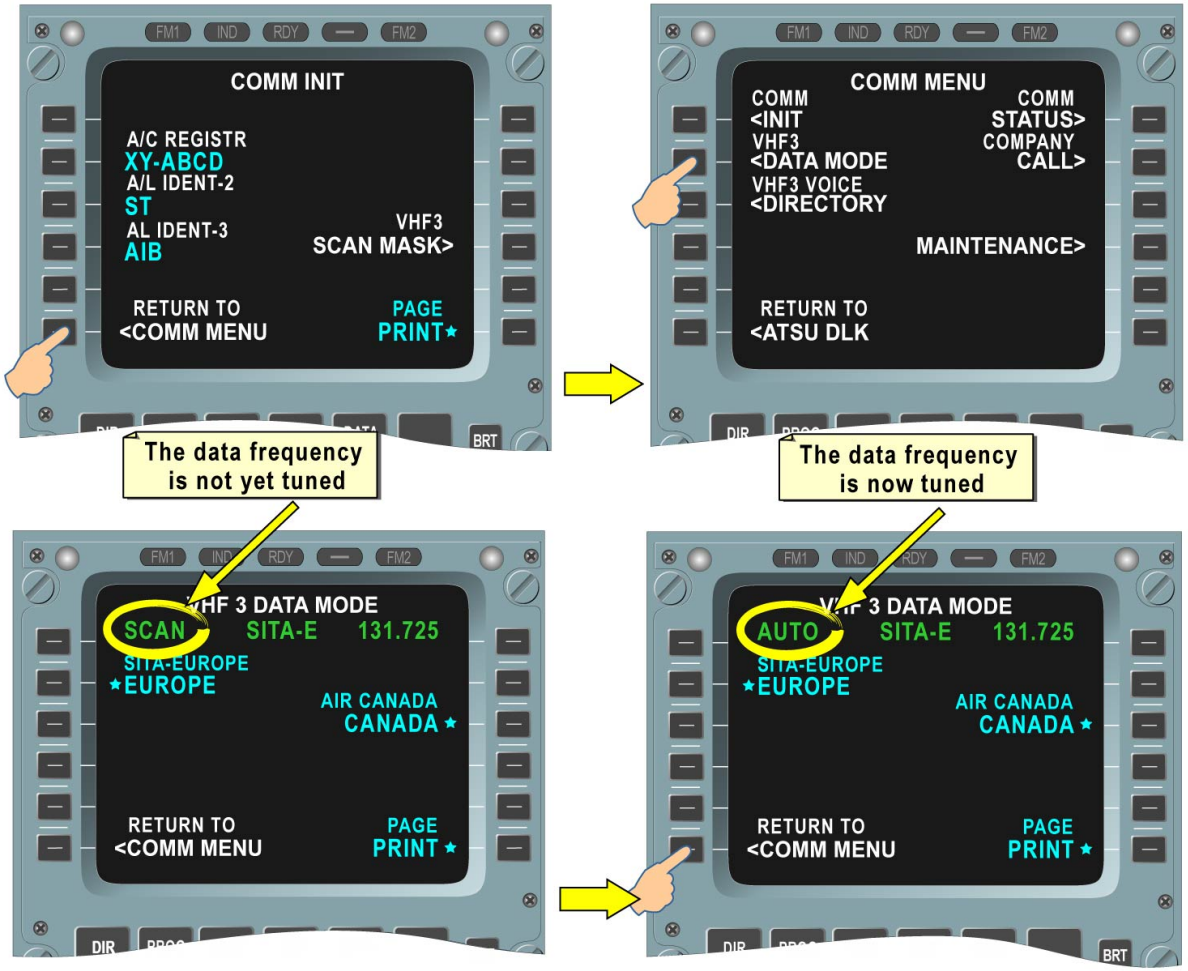

STEP-BY-STEP PROCEDURES (EXAMPLES) - INITIALIZATION OF THE ATSU ROUTER

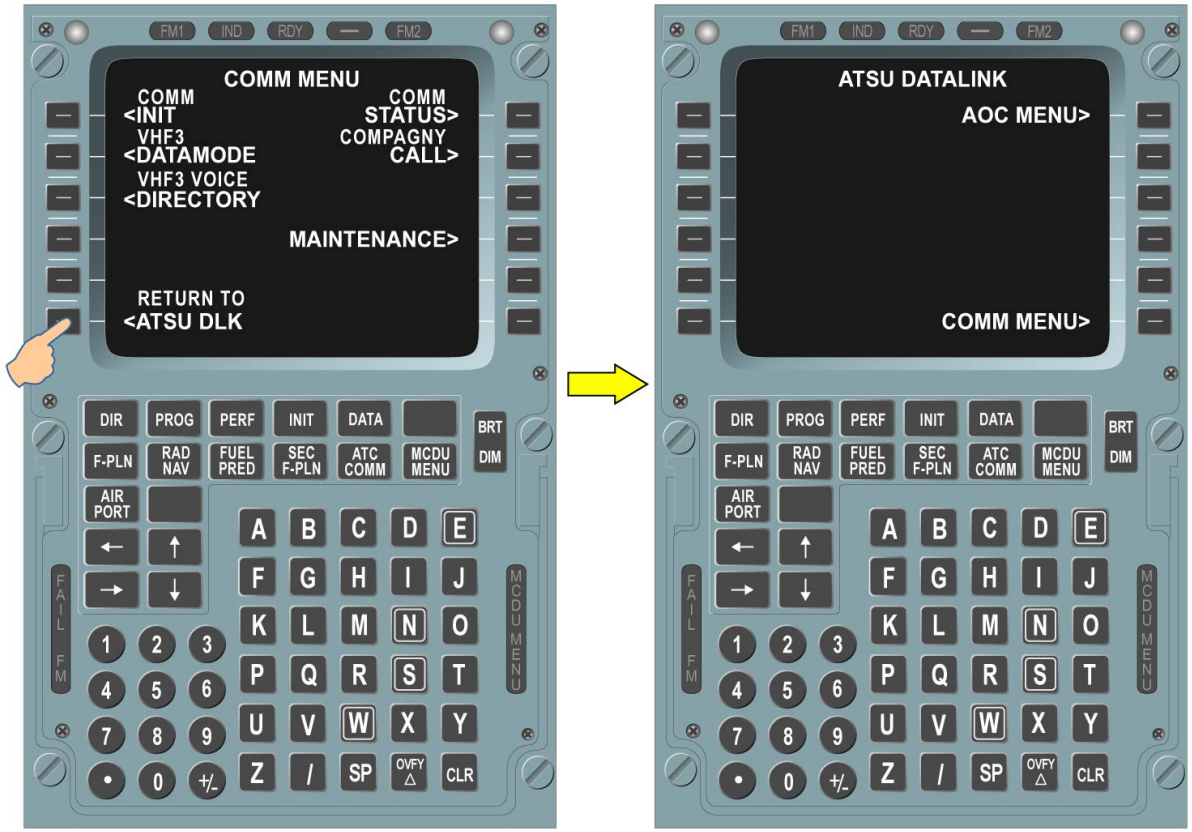

Initialization procedure is completed

STEP-BY-STEP PROCEDURES (EXAMPLES) - INITIALIZATION OF THE ATSU ROUTER

G7508471 - G7OT0T0 - FM46D200000002

This Page Intentionally Left Blank

G7508471 - G7OT0T0 - FM46D200000002

ATIMS MENU D/O (3)

STEP-BY-STEP PROCEDURES (EXAMPLES) (continued)

Operational Test of the ATSU

This procedure, called Operational Test of the ATSU, lets check the ATSU router configuration and test the voice mode.
Push the MCDU MENU key: the MCDU MENU page is displayed..
Push the ATSU line key: the ATSU DATALINK page will be displayed
Push the COMM MENU line key: the COMM MENU is displayed.
Push the VHF3 DATA MODE line key: the VHF3 DATA MODE page will be displayed.
The ATSU automatically controls data frequencies in the order defined in the VHF3 SCAN MASK menu but a service provider can be manually selected.
Push the SITA-EUROPE line key: the DSP SITA EUROPE is manually selected (blue star mark disappears).
Push the RETURN TO COMM MENU line key: the COMM MENU page will be displayed.
The VHF3 VOICE DIRECTORY page is used:
To activate one of the displayed frequencies configured by the AOC application
- To activate the voice frequency requested by the ground (CO CALL),
- To manually enter a frequency,
- To go back to data mode.
The VOICE DIRECTORY PAGE displays the list of the pre-selected frequencies that can be used in VOICE MODE
Push the VHF3 VOICE DIRECTORY line key: the VHF3 VOICE DIRECTORY page is displayed.
The ATSU controls now the VHF3 frequency in VOICE mode., On the RMP, the ACARS indication stays in view in the active window.
The OPS frequency 132.225 will now operate in VOICE MODE and on the RMP Active window DATA is displayed.
Push the W/VHF3 VOICE DIRECTORY line key: the VHF3 currently operates in VOICE MODE.
Push the VHF3 VOICE DIRECTORY line key: the VHF3 VOICE DIRECTORY page is displayed.
Push the MODE DATA line key: the VHF3 will now reverse to the DATA MODE.
The VHF3 operates now in DATA MODE.
Push the RETURN TO COMM MENU line key: the COMM MENU page is displayed.
Push the COMM STATUS line key: COMM STATUS pages will be displayed.
The COMM STATUS page displayed the status of the communication media and the peripherals.
COMM SATUS 1/2 is displayed.
Push the next page KEY/ comm. The Status PAGE 2/2 is displayed.
These pages indicate the status of peripheral systems interconnected with the ATSU. (Job is completed)

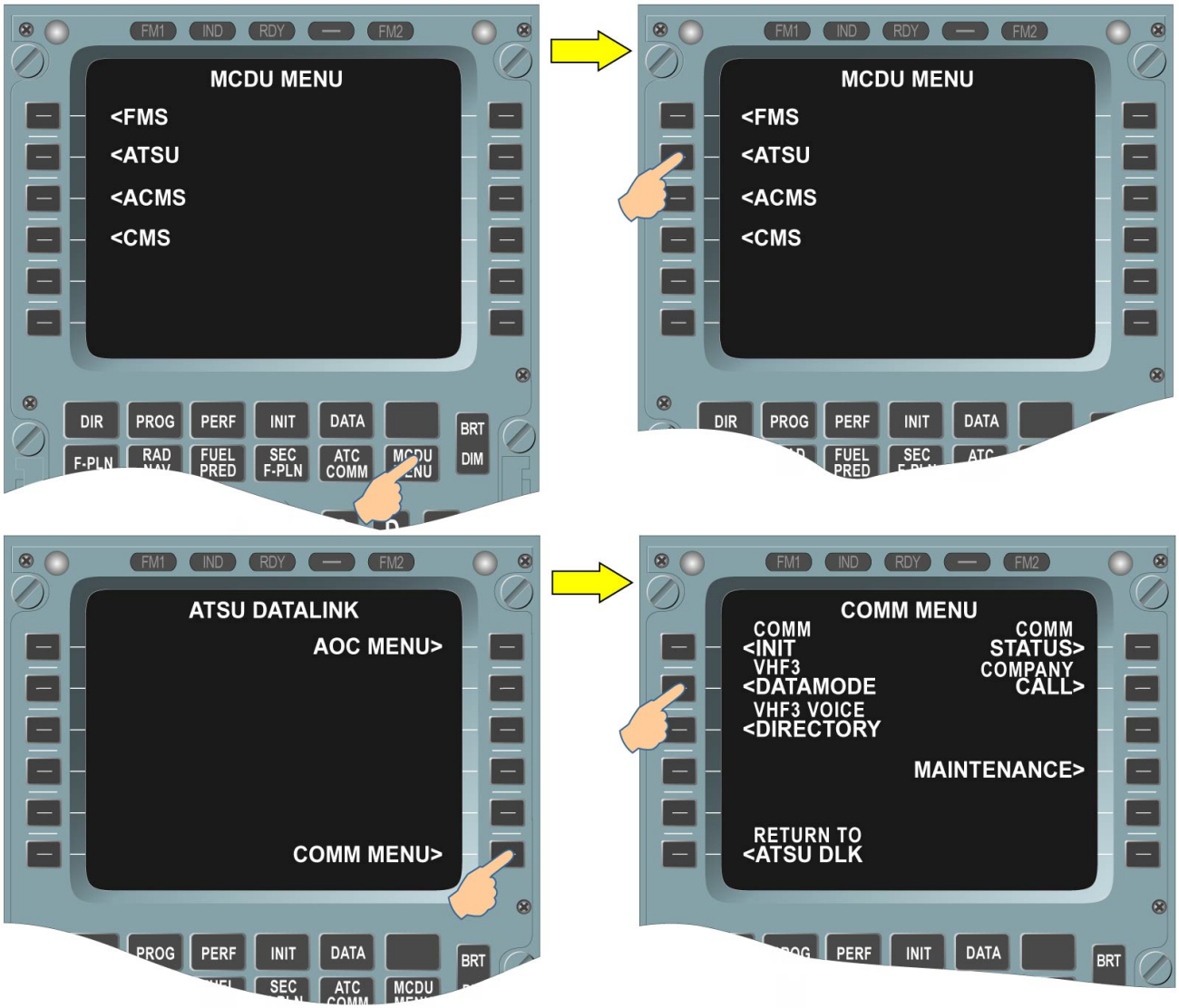

STEP-BY-STEP PROCEDURES (EXAMPLES) - OPERATIONAL TEST OF THE ATSU

G7508471 - G7OT0T0 - FM46D200000002

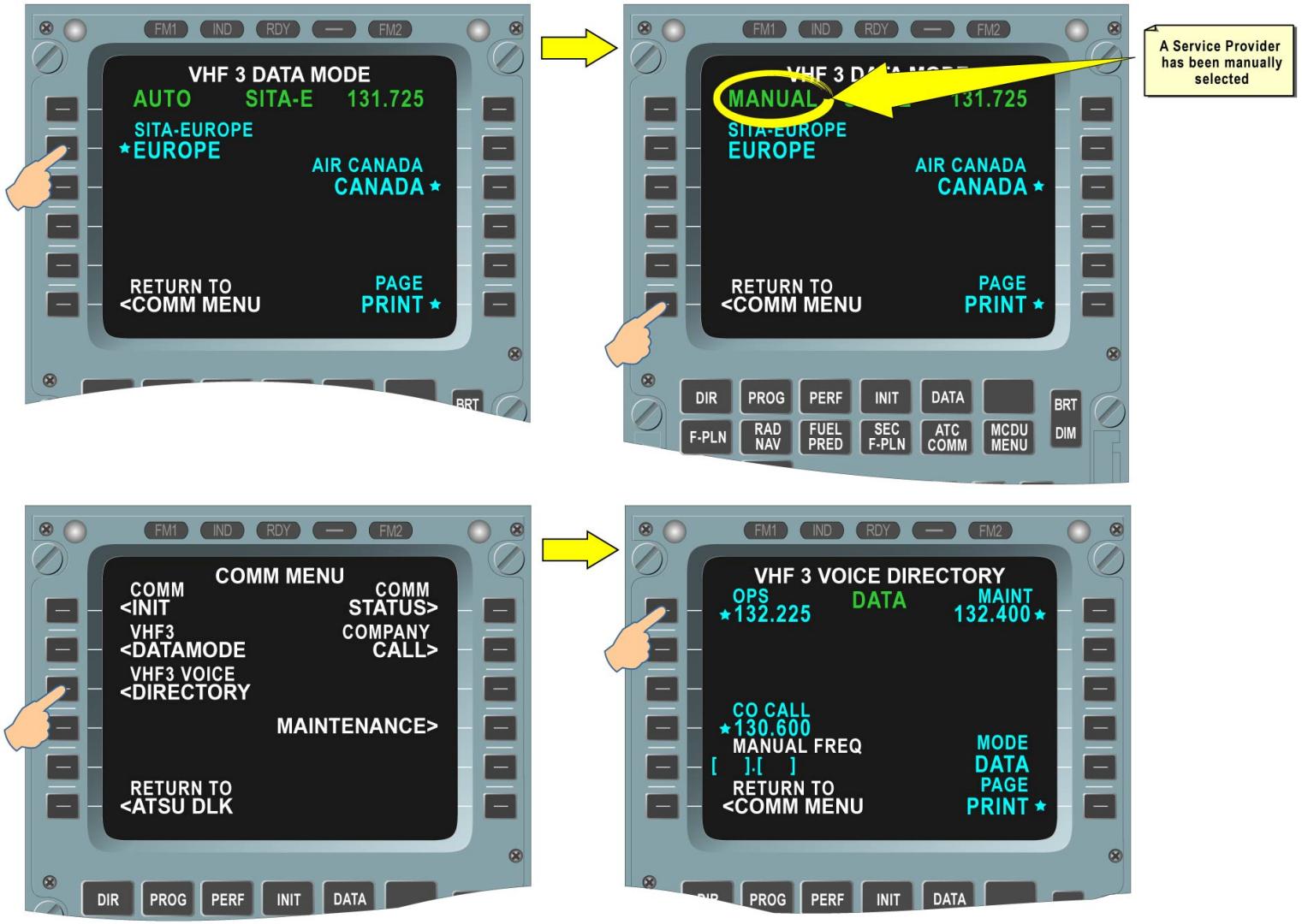

STEP-BY-STEP PROCEDURES (EXAMPLES) - OPERATIONAL TEST OF THE ATSU

G7508471 - G7OT0T0 - FM46D200000002

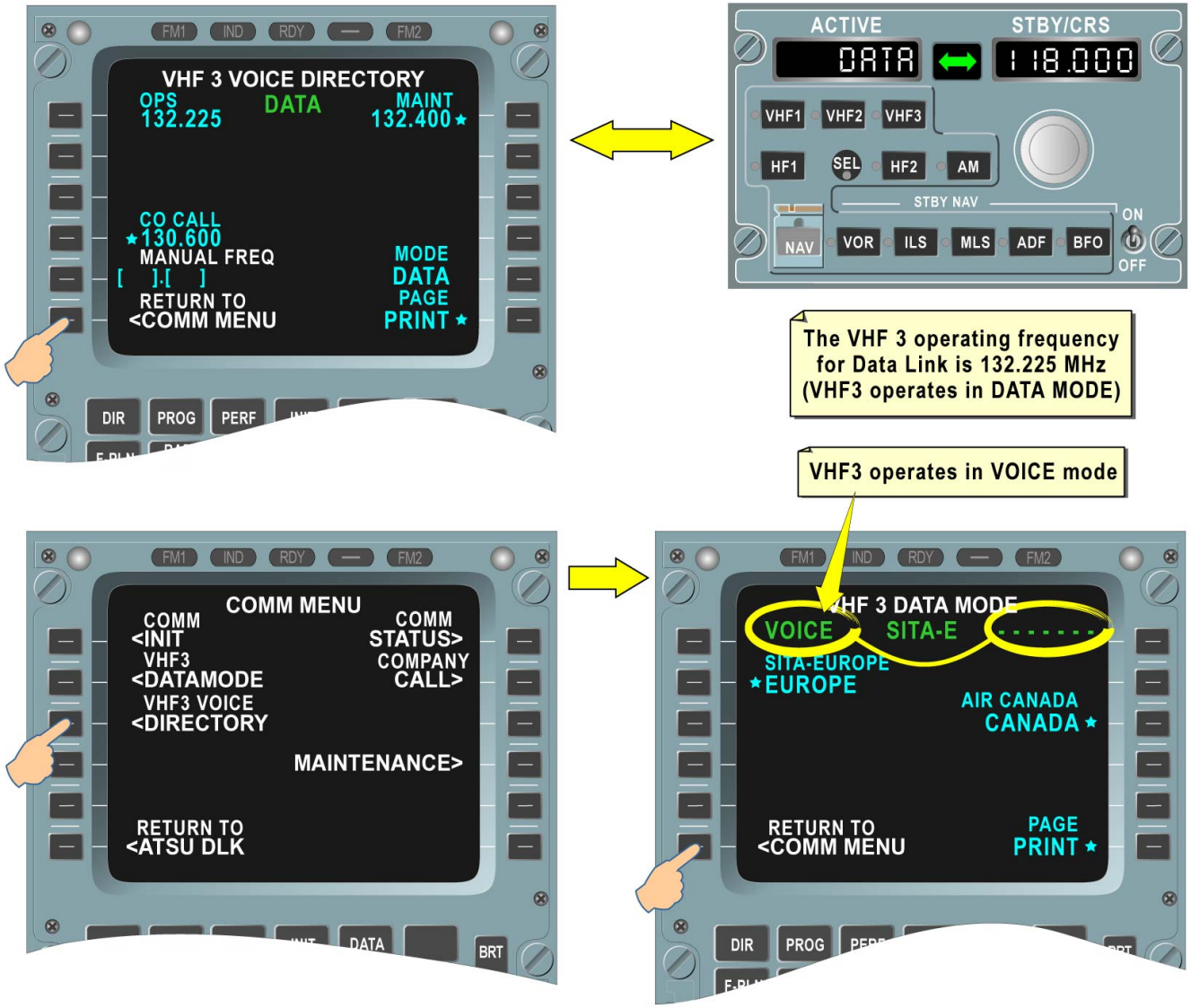

STEP-BY-STEP PROCEDURES (EXAMPLES) - OPERATIONAL TEST OF THE ATSU

G7508471 - G7OT0T0 - FM46D200000002

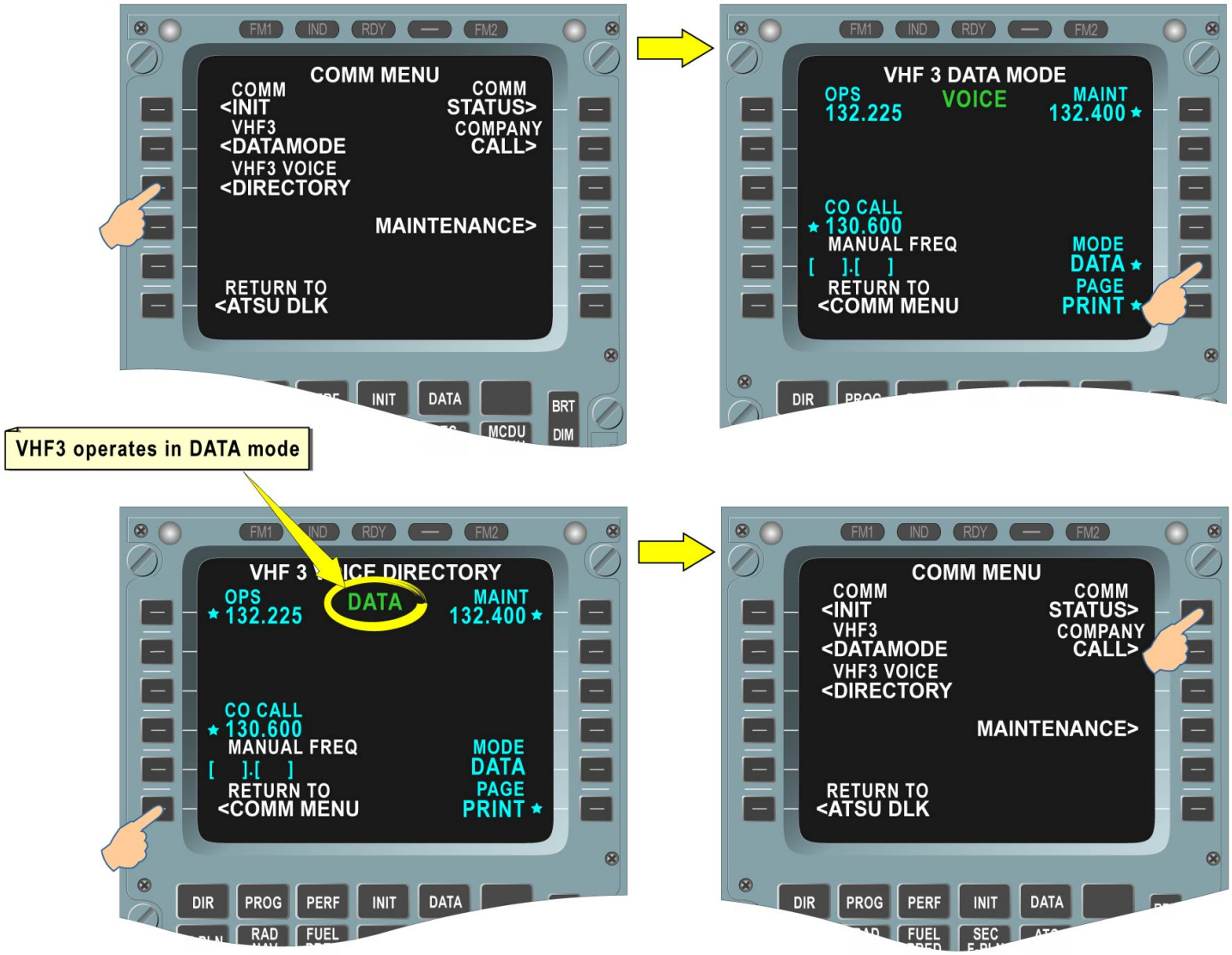

STEP-BY-STEP PROCEDURES (EXAMPLES) - OPERATIONAL TEST OF THE ATSU

G7508471 - G7OT0T0 - FM46D200000002

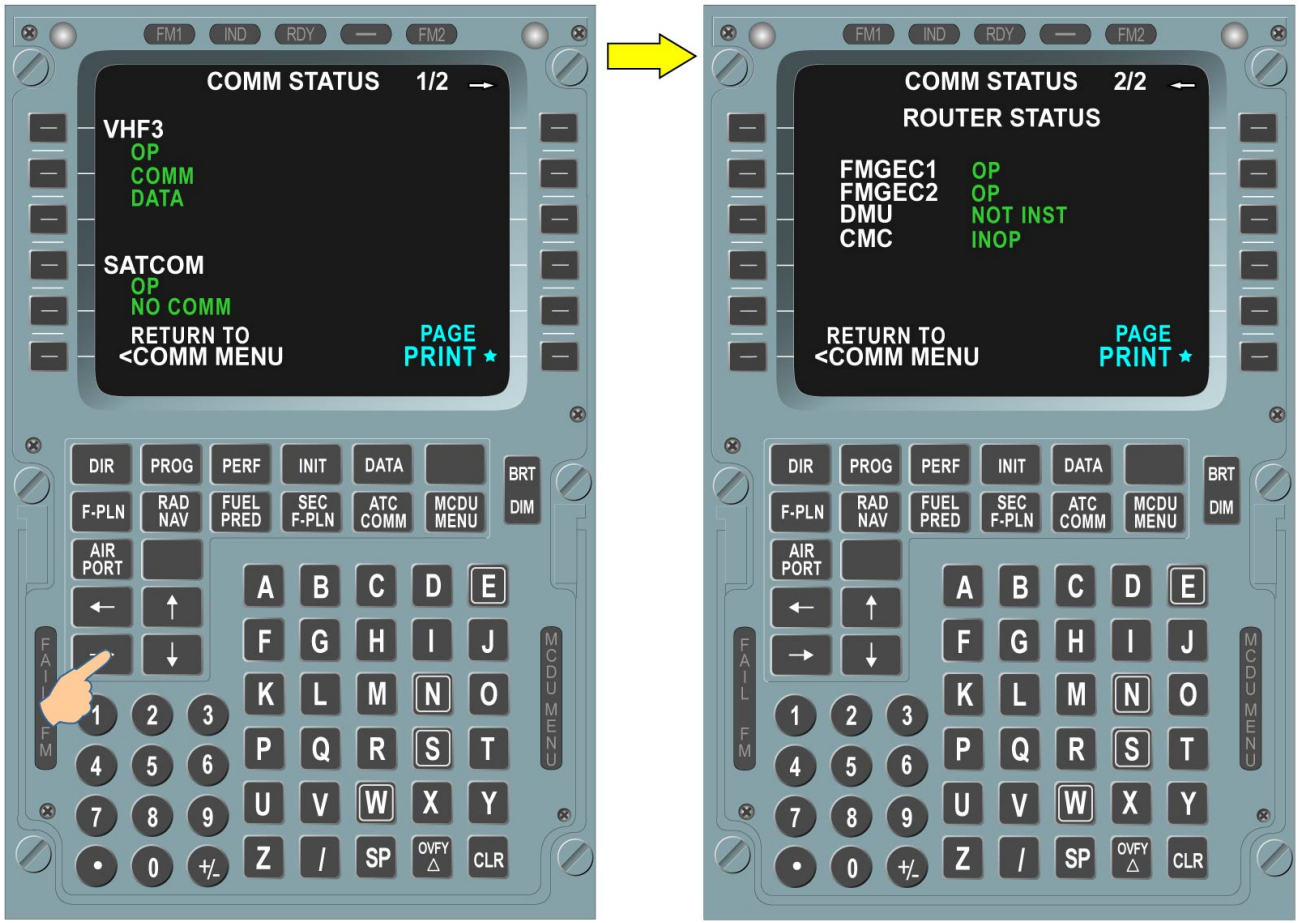

Job is completed!

STEP-BY-STEP PROCEDURES (EXAMPLES) - OPERATIONAL TEST OF THE ATSU

ATIMS MENU D/O (3)

STEP-BY-STEP PROCEDURES (EXAMPLES) (continued)

VHF3 Link test of the ATSU

This procedure, called VHF3 Link Test of the ATSU, allows checking the VHF3 link between the A/C and the ground
Push the ATSU line key: the ATSU DATALINK page is displayed.
Push the COMM MENU line key: the COMM MENU page will be displayed.
A check of the ATSU initialization is done through the VHF3 DATA MODE menu, the VHF3 VOICE DIRECTORY menu and the COMM STATUS menu.
Push the VHF3 DATA MODE line key: the VHF3 DATA MODE page is displayed.
Push the RETURN TO COMM MENU line key: the COMM MENU page will be displayed.
Push the VHF3 VOICE DIRECTORY line key: the VHF3 VOICE DIRECTORY page is displayed (Operating frequency in DATA MODE is indicated).
Push the RETURN TO COMM MENU line key: COMM MENU page will be displayed.
Push the COMM STATUS line key: COMM STATUS pages are displayed (The status of peripheral system interconnected with the ATSU is displayed).
Push the RETURN TO COMM MENU line key: the COMM MENU page will be displayed.
The link test is accessible through the MAINTENANCE menu.
Push the MAINTENANCE line key: the MAINTENANCE MENU is displayed.
Push the TEST line key: the VHF3 LINK test command will be available.
The result of this test confirms that communication link between the VHF3 and the ground is operational.
Push the REQUEST VHF3 LINK line key: the VHF3 LINK test is in progress.
The VHF3 LINK test is correct.
Push the RETURN TO MAINTENANCE line key: the MAINTENANCE page is displayed.
Push the RETURN TO COMM MENU line key: the COMM MENU will be displayed.
Push the RETURN TO ATSU DLK line key: the ATSU DATALINK page is displayed.
The VHF3 Link Test of the ATSU is done.

G7508471 - G7OT0T0 - FM46D200000002

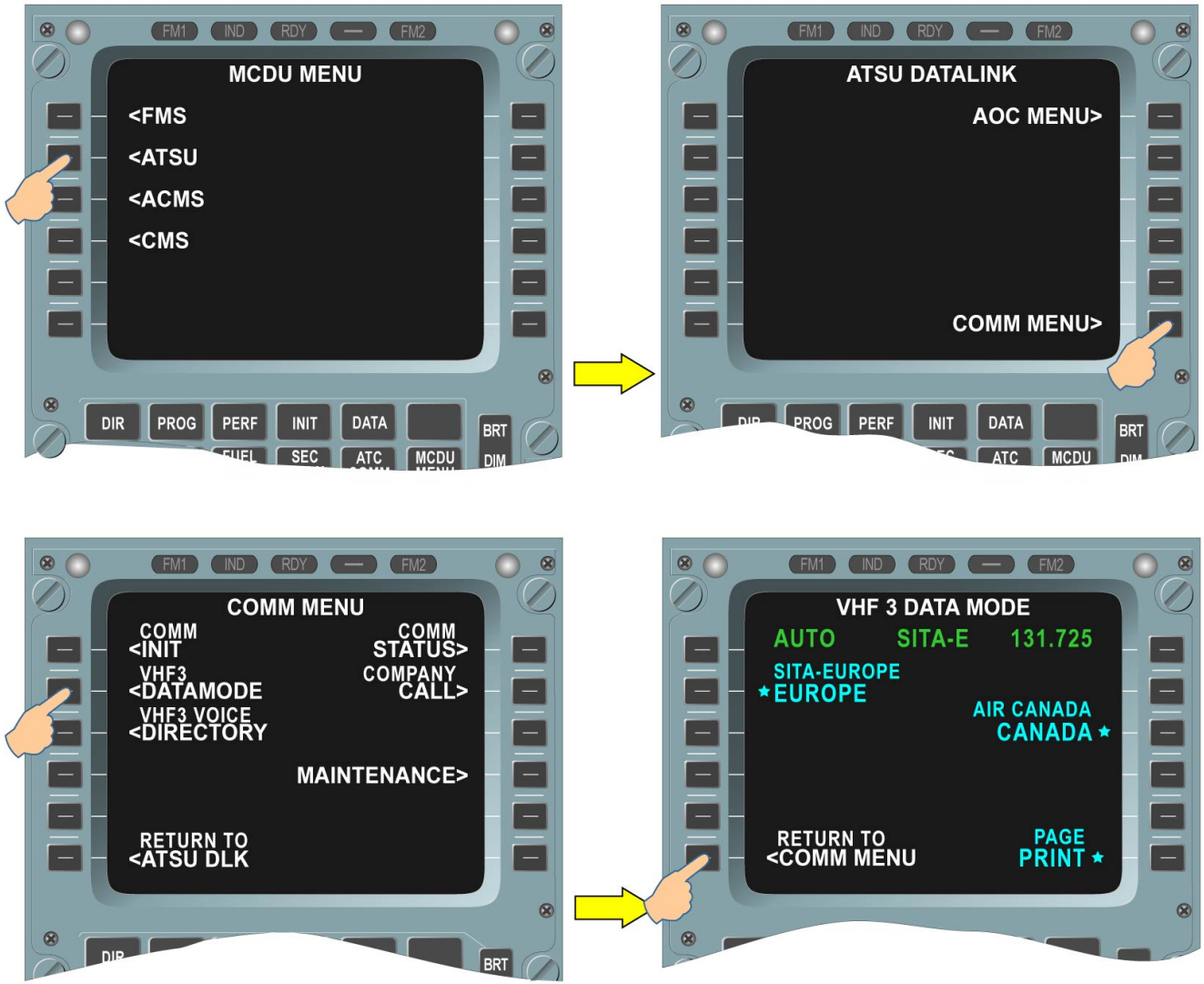

STEP-BY-STEP PROCEDURES (EXAMPLES) - VHF3 LINK TEST OF THE ATSU

G7508471 - G7OT0T0 - FM46D200000002

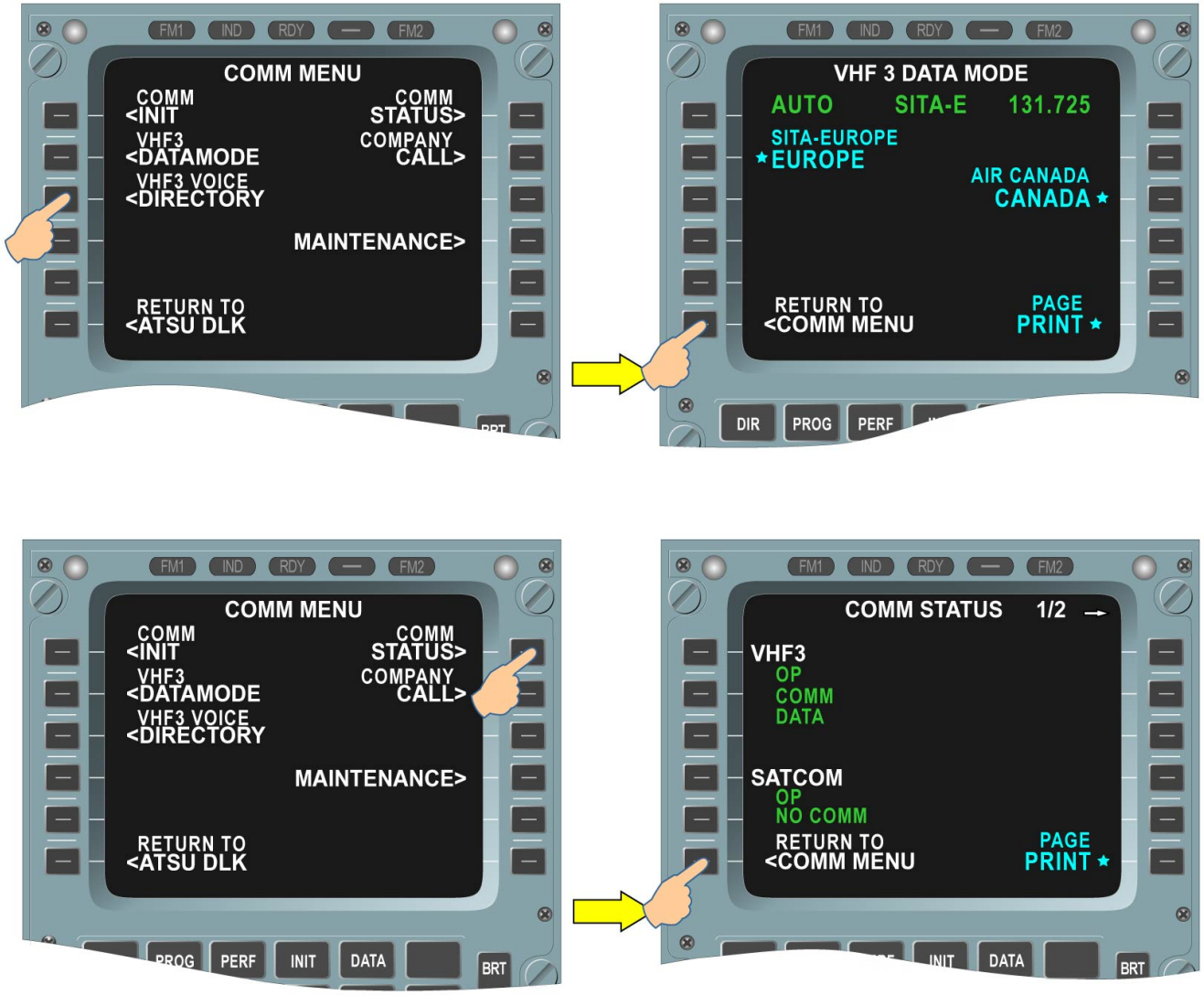

STEP-BY-STEP PROCEDURES (EXAMPLES) - VHF3 LINK TEST OF THE ATSU

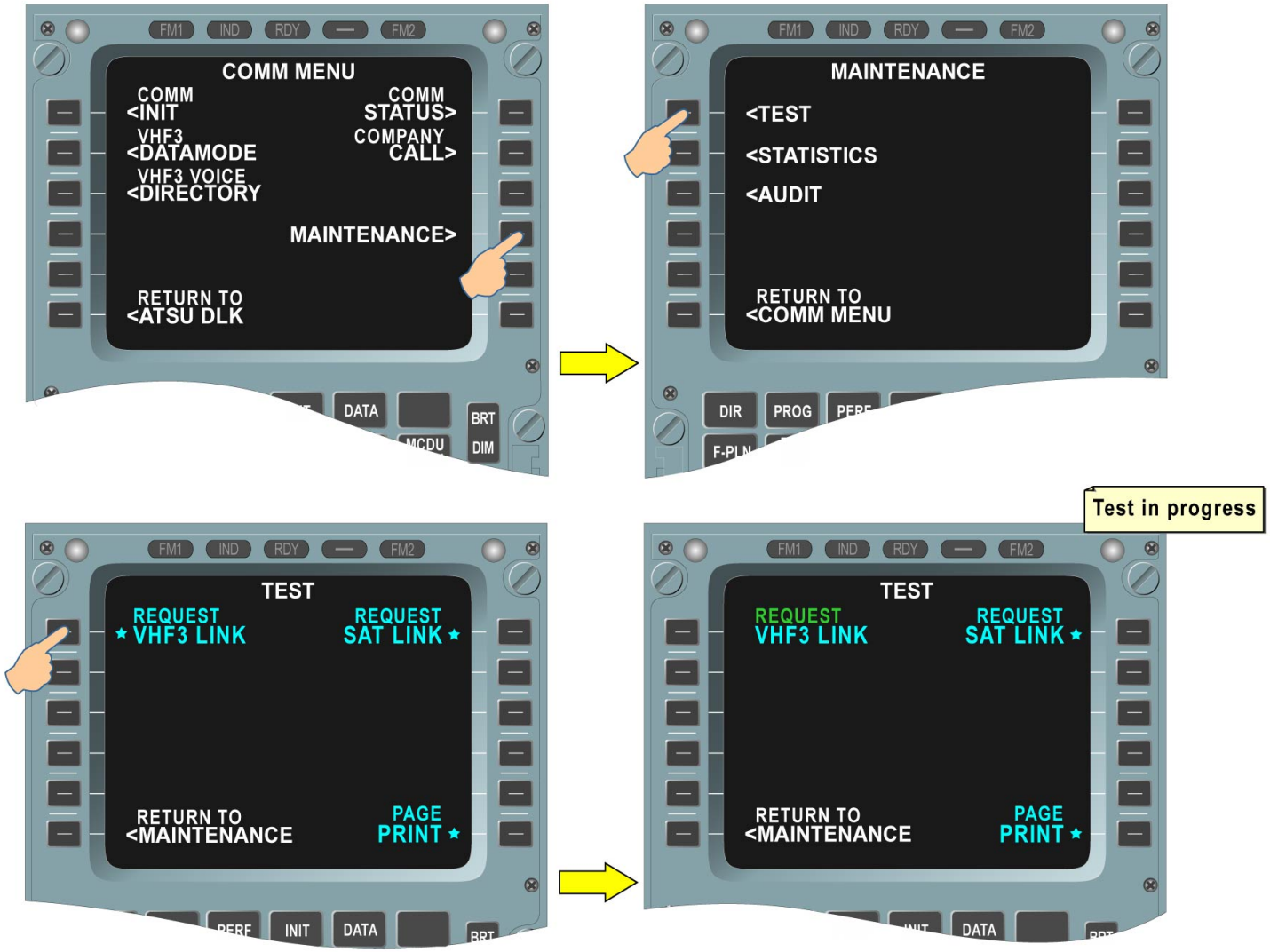

STEP-BY-STEP PROCEDURES (EXAMPLES) - VHF3 LINK TEST OF THE ATSU

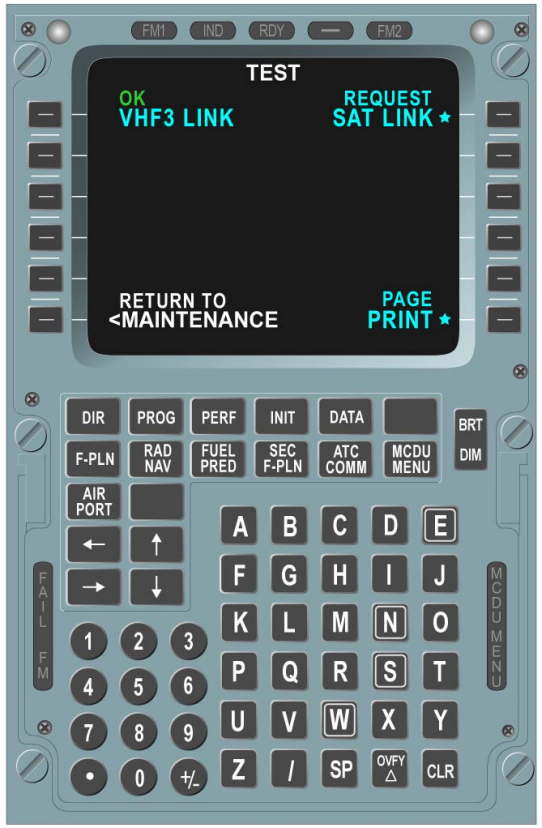

STEP-BY-STEP PROCEDURES (EXAMPLES) - VHF3 LINK TEST OF THE ATSU

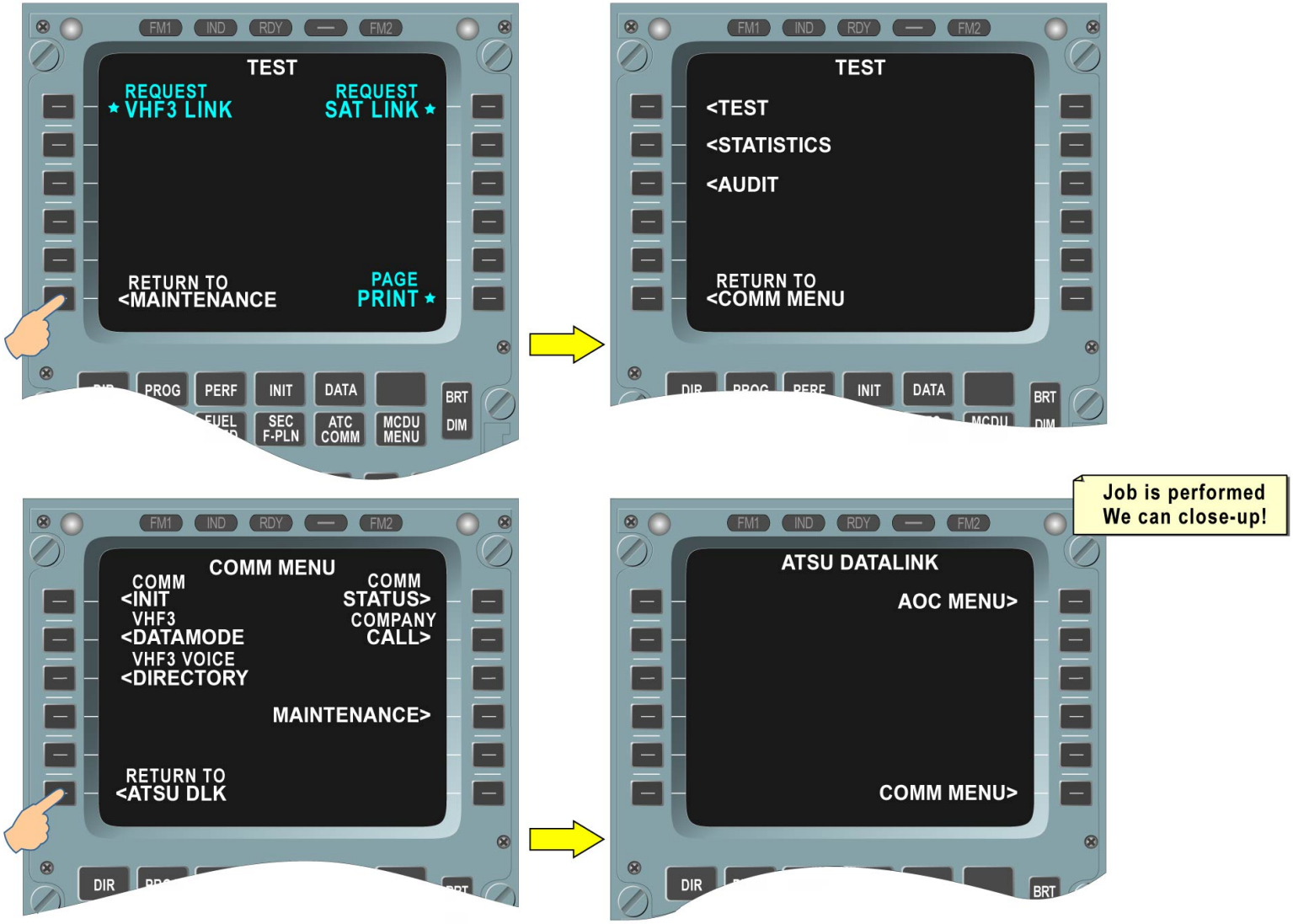

STEP-BY-STEP PROCEDURES (EXAMPLES) - VHF3 LINK TEST OF THE ATSU

INFORMATION SYSTEMS AINS D/O (3)

SYSTEM ARCHITECTURE

The host platform of the Airbus Information Network System (AINS) has three components:
- the Aircraft Network Server Unit (ANSU), which provides a powerful server and data management functions on-board the aircraft,
- the Server Interface Unit (SIU), which protects the "avionics world" systems from pollution or hacking intrusion from the "open world", and gives a security barrier between the avionics and open networks.

Additionally, the Terminal Wireless LAN Unit (TWLU) and its related antenna makes sure that wireless communications of AINS with the airport LAN (A/C on ground) operates.

G7508471 - G7OT0T0 - FM46D3000000001

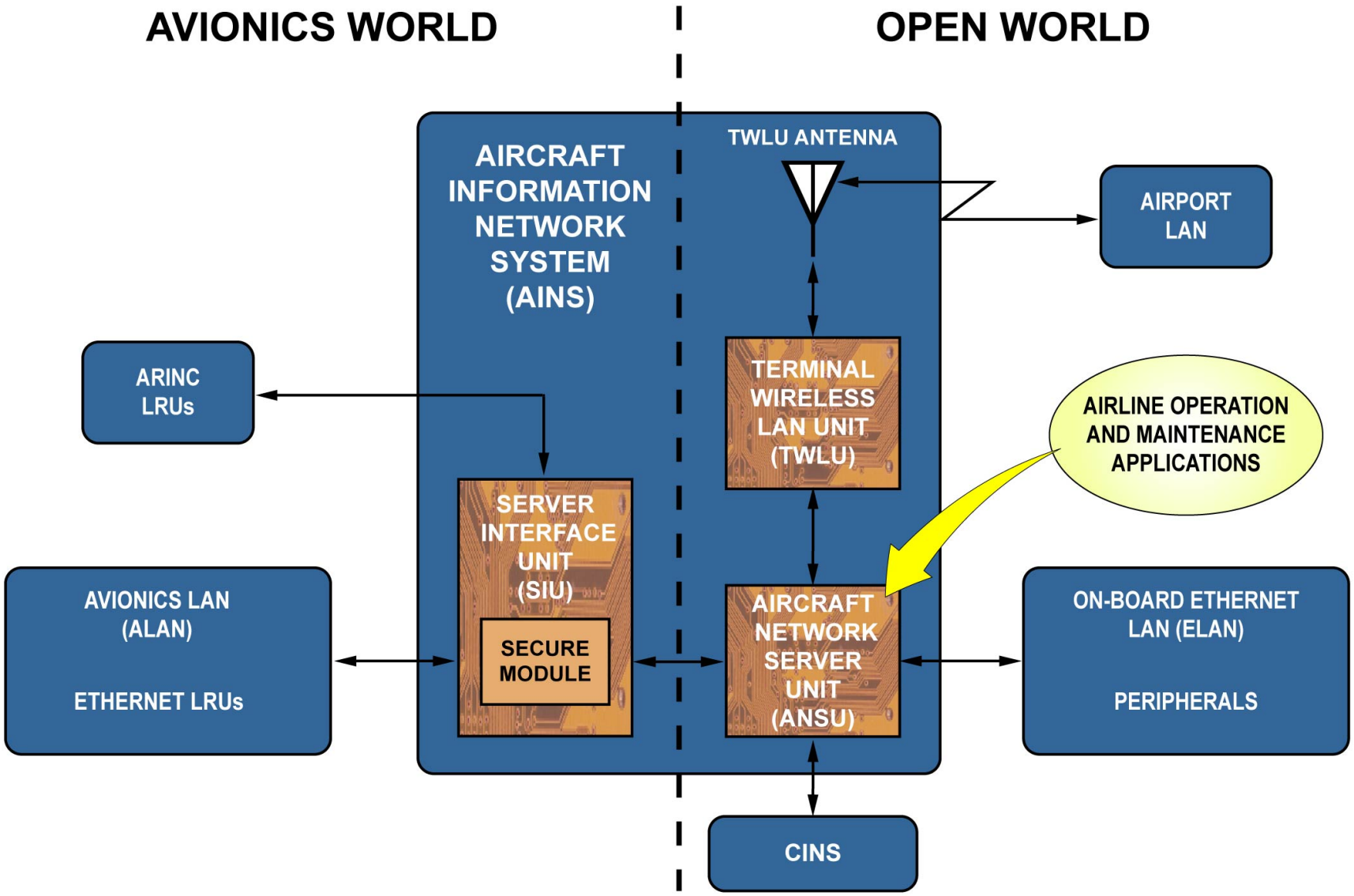

SYSTEM ARCHITECTURE

G7508471 - G7OT0T0 - FM46D300000001

INFORMATION SYSTEMS AINS D/O (3)

THE ANSU

The ANSU gives a common data/file storage system, a host-platform for airline application processing and network communication services. The ANSU is an open world data server, which manages the Ethernet LAN (ELAN) network by means of an Ethernet switch and enables communication between the "open world" and the "avionics world". Its main function is to host airline applications on-board the aircraft while providing also significant mass storage capability for loadable software and other applications.
The ANSU is interfaced with the TWLU for ground network connection, with the Cabin Information Network System (CINS), with three cockpit plugs, two for connection of a laptop and one for connection of a maintenance laptop and a printer.

G7508471 - G7OT0T0 - FM46D3000000001

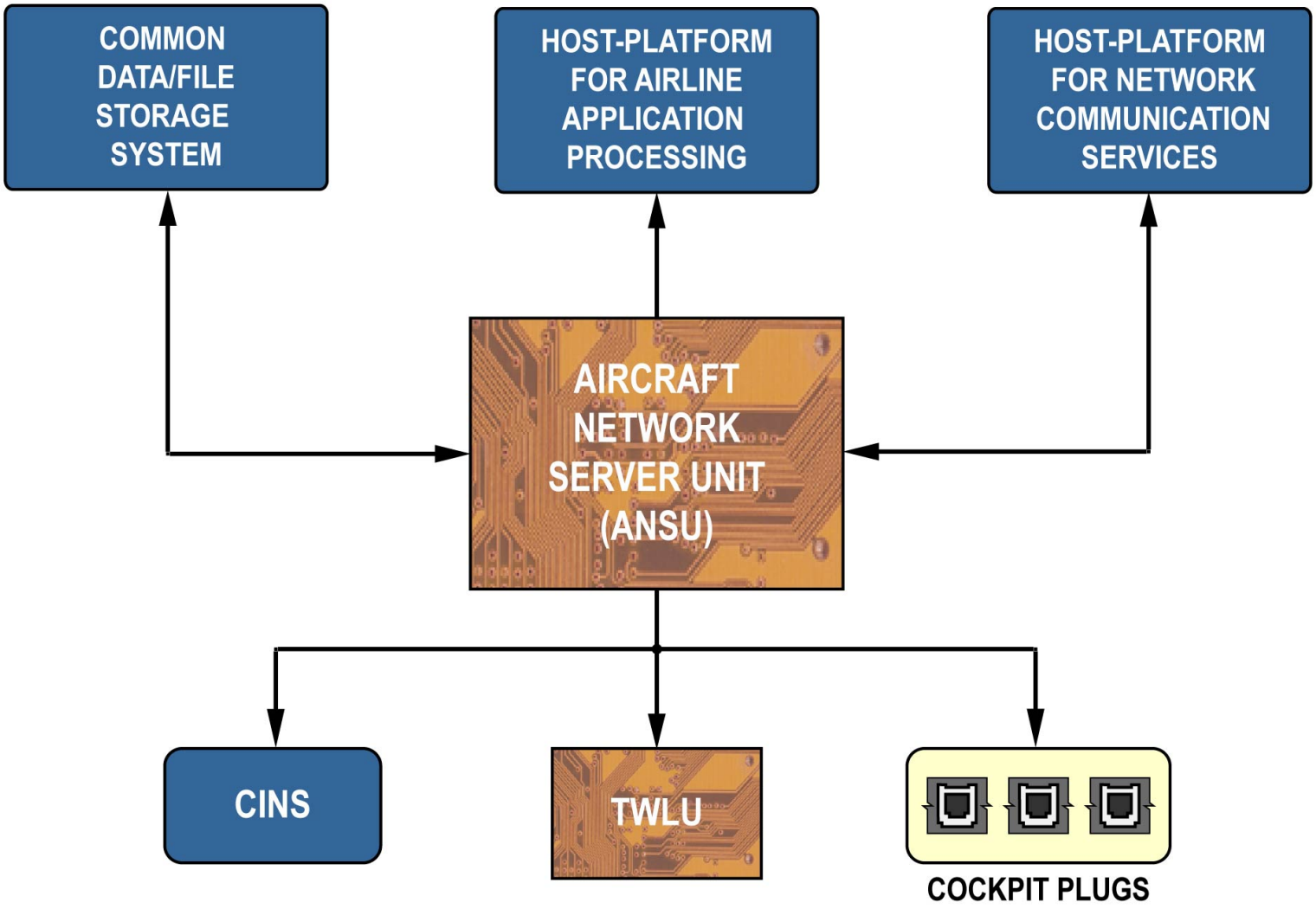

THE ANSU

G7508471 - G7OT0T0 - FM46D3000000001

INFORMATION SYSTEMS AINS D/O (3)

THE SIU

The function of the SIU is to supply an interface between the open world and the avionics world, to host "sensitive" applications and to accommodate an Ethernet switch.
The SIU supports the following functions:
- Avionics LAN (ALAN); an Ethernet switch which gives the connection to Ethernet LRUs,
- Input/Output (I/O) with the avionics; an I/O module locks on, transmits labels, etc. This I/O is done through a direct interface,
- Avionics Software Protection Module; as the system supplies interface with the avionics, it makes sure that avionics will be isolated from the open world, protecting it from degradation and corruption. The protection module therefore controls every input to the avionics and allows throughput only if the data meet conditions defined in loadable database. It is the core of the AINS safety policy to make sure that the AINS embedded applications cannot interfere with the aircraft functions.
- the core software,
- the loadable database (filtering table database).

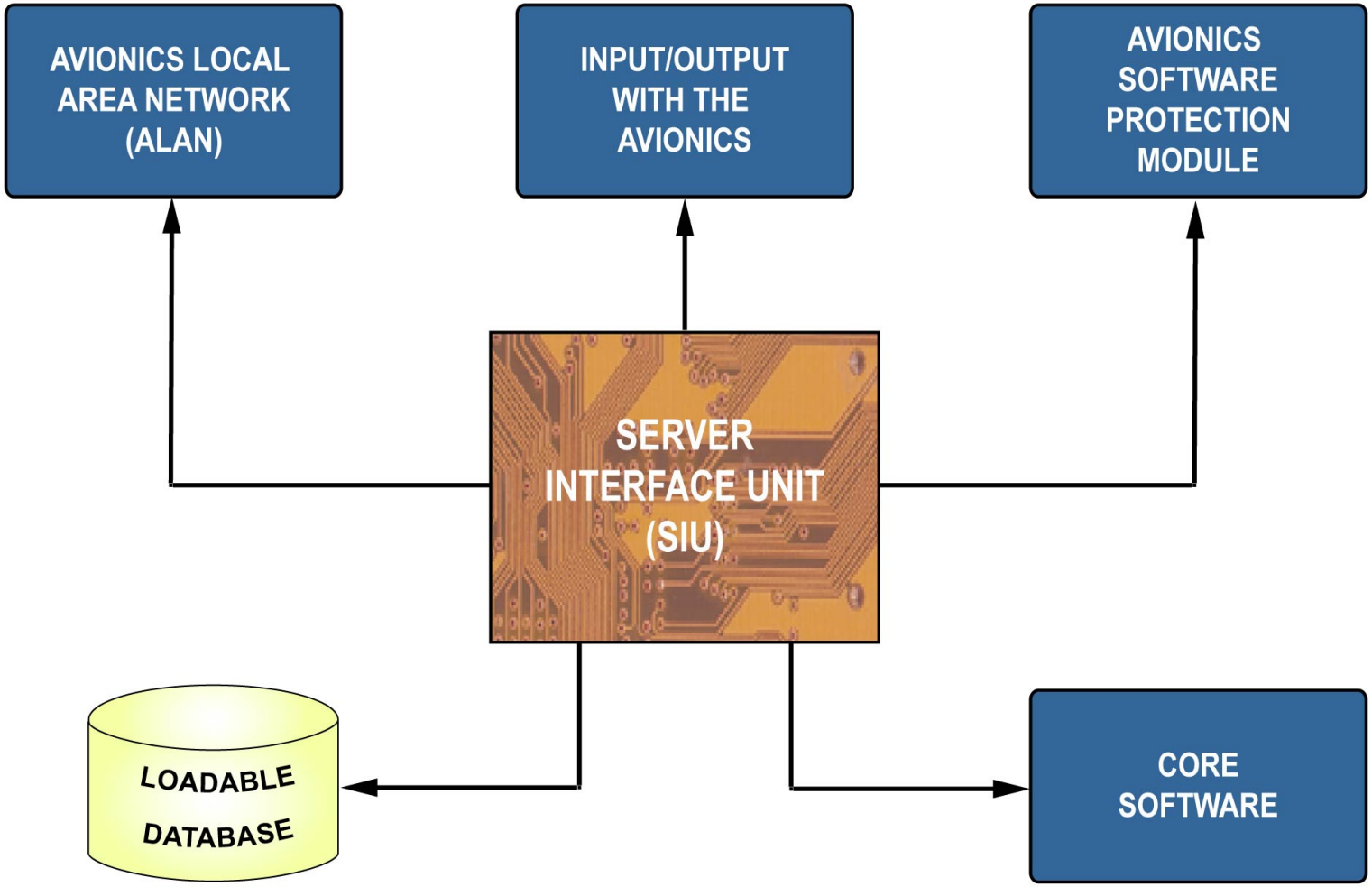

THE SIU

G7508471 - G7OT0T0 - FM46D300000001

INFORMATION SYSTEMS AINS D/O (3)

THE TWLU

The TWLU is used to bridge a connection between the on-board ELAN and the airport LAN. The TWLU bridges these two networks using a wireless RF spread spectrum link.
The TWLU supports the following functions:
- operation independent of LAN protocols,
- typical network functions, such as file server access from aircraft terminals, terminal emulation sessions to ground-based host, providing file transfer capability and internet access.

The function of the TWLU is to operate only while the aircraft is on the ground. The antenna is an omni-directional antenna coaxially connected to the TWLU.

G7508471 - G7OT0T0 - FM46D3000000001

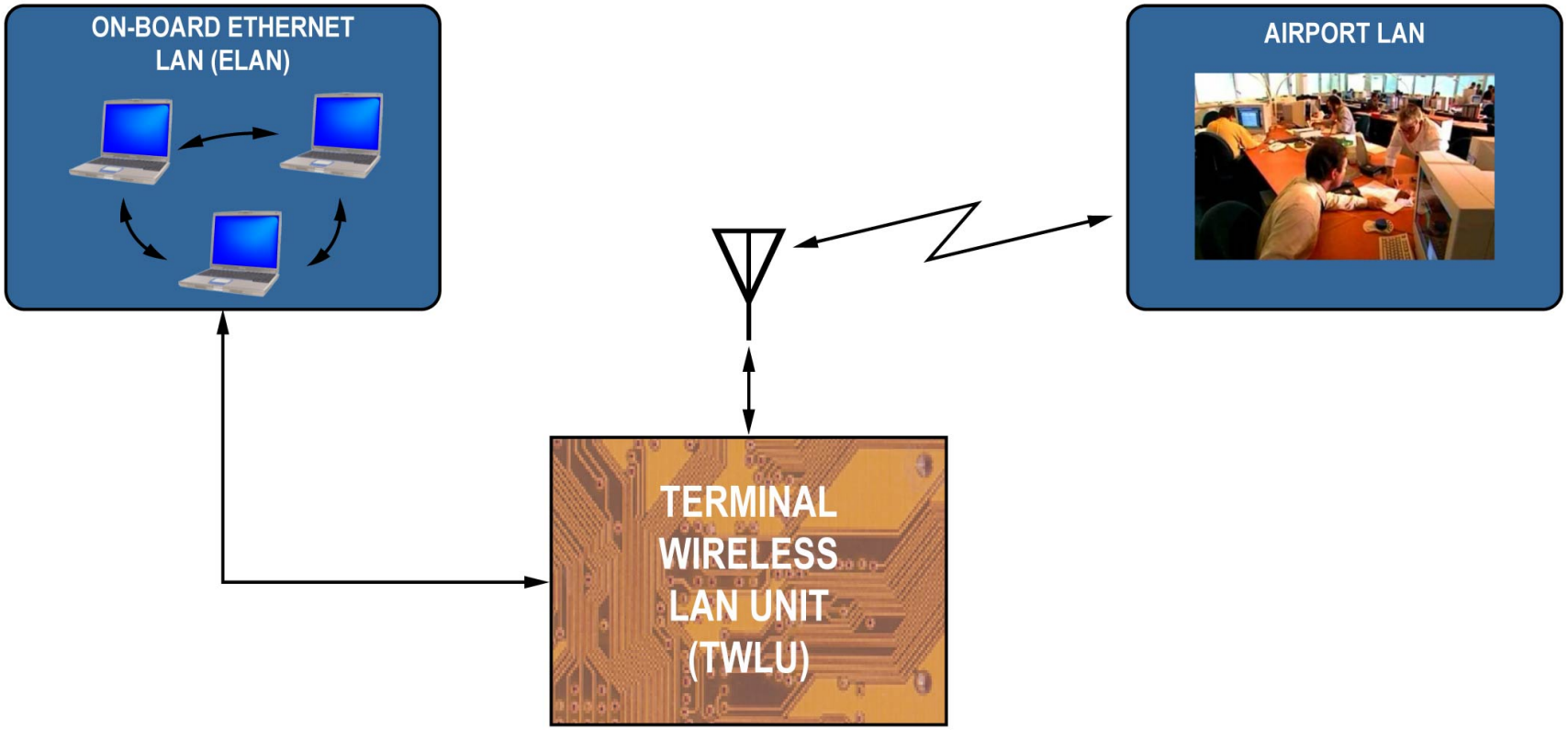

THE TWLU

G7508471 - G7OT0T0 - FM46D3000000001

INFORMATION SYSTEMS AINS D/O (3)

POWER SUPPLY

The SIU, the ANSU and the TWLU are supplied with 115V AC from the 115V AC BUS 2 bar 206XP-C via a Circuit Breaker (C/B).

G7508471 - G7OT0T0 - FM46D300000001

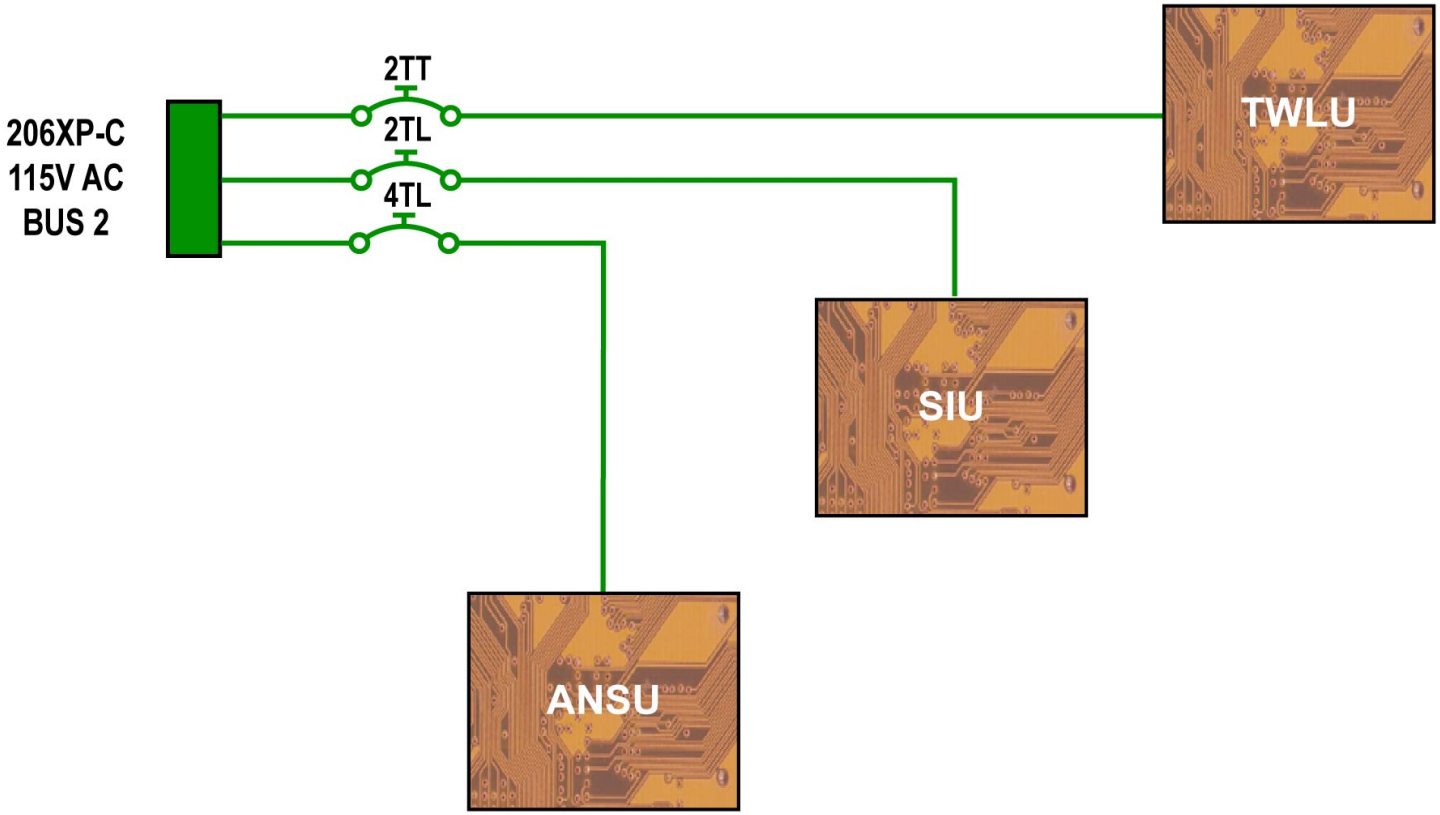

POWER SUPPLY

G7508471 - G7OT0T0 - FM46D3000000001

INFORMATION SYSTEMS AINS D/O (3)

INTERFACES

The ANSU uses high speed data transfer and is connected to the outside world via 8 ports. These ports are used to connect the ANSU to wired peripherals:
- cockpit CAPT plug,
- cockpit F/O plug,
- cockpit PC and printer plug.

The ANSU also supplies interface with the SIU, the TWLU and the CINS.
The SIU is the only LRU of the Flight Smart with Airbus (FSA) system connected to the Central Maintenance Computer (CMC). Then the SIU is directly connected to the MCDU 3 and the printer.

NOTE: If the SIU is removed (e.g for maintenance purpose), the MCDU 3 and the printer connections with the CMC are lost as they are switched internally in the SIU.

A coaxial cable connects the TWLU to the antenna.
The SIU acquires two discrete signals from the TWLU and sends three discrete signals to the TWLU:
- Frequency Hopping Spread Spectrum (FHSS) discrete is activated when the FHSS mode is selected and during Flight Warning Computer (FWC) phase 1, 2, 9, 10,
- Direct Sequence Spread Spectrum (DSSS) discrete is activated when the DSSS mode is selected and during FWC phase 1, 2, 9, 10,
- TWLU power discrete from the SIU powers up the TWLU.

The SIU acquires the LRU status discrete from the Cabin Wireless LAN Units (CWLU). The SIU sends two discrete signals to the CINS CWLUs:
- FHSS is activated during FWC phase 1, 2, 6, 9, and 10,
- DSSS is activated during FWC phase 1, 2, 6, 9, and 10.

The SIU acquires:
- a weight on wheel discrete signal from the Landing Gear Control and Interface Unit (LGCIU),
- three discrete from the Data Loading Routing Box (DLRB),
- four Digital ACMS Recorder (DAR) speed control discrete from the Flight Data Interface and Management Unit (FDIMU),
- one hardware pin programming to determinate A/C family.

The SIU supplies ARINC 429 interface with the avionics LRUs to support data loading ARINC 615-3. These links give a connection between the SIU and Display Management Computers (DMC)(3), FWC 2, System Data Acquisition Concentrator (SDAC) 2, Flight Management Guidance and Envelope Computers (FMGECs), Air Data/Inertial Reference System (ADIRU) 2, and the Air Traffic Service Unit (ATSU). The SIU gives the following ARINC 429 output data to a test plug located in the electronics rack on 800VU. The SIU supplies one ARINC 717 input from the Aircraft Condition Monitoring System (ACMS) for wireless DAR data acquisition.
The SIU supplies ARINC 429 interface in order to support future ARINC 615-3 data loading applications.
The AINS reset switch, located on the 262VU panel, restarts the SIU and the ANSU simultaneously. After the software reset, it is necessary to wait approximately 15 minutes before using the AINS and the CINS.

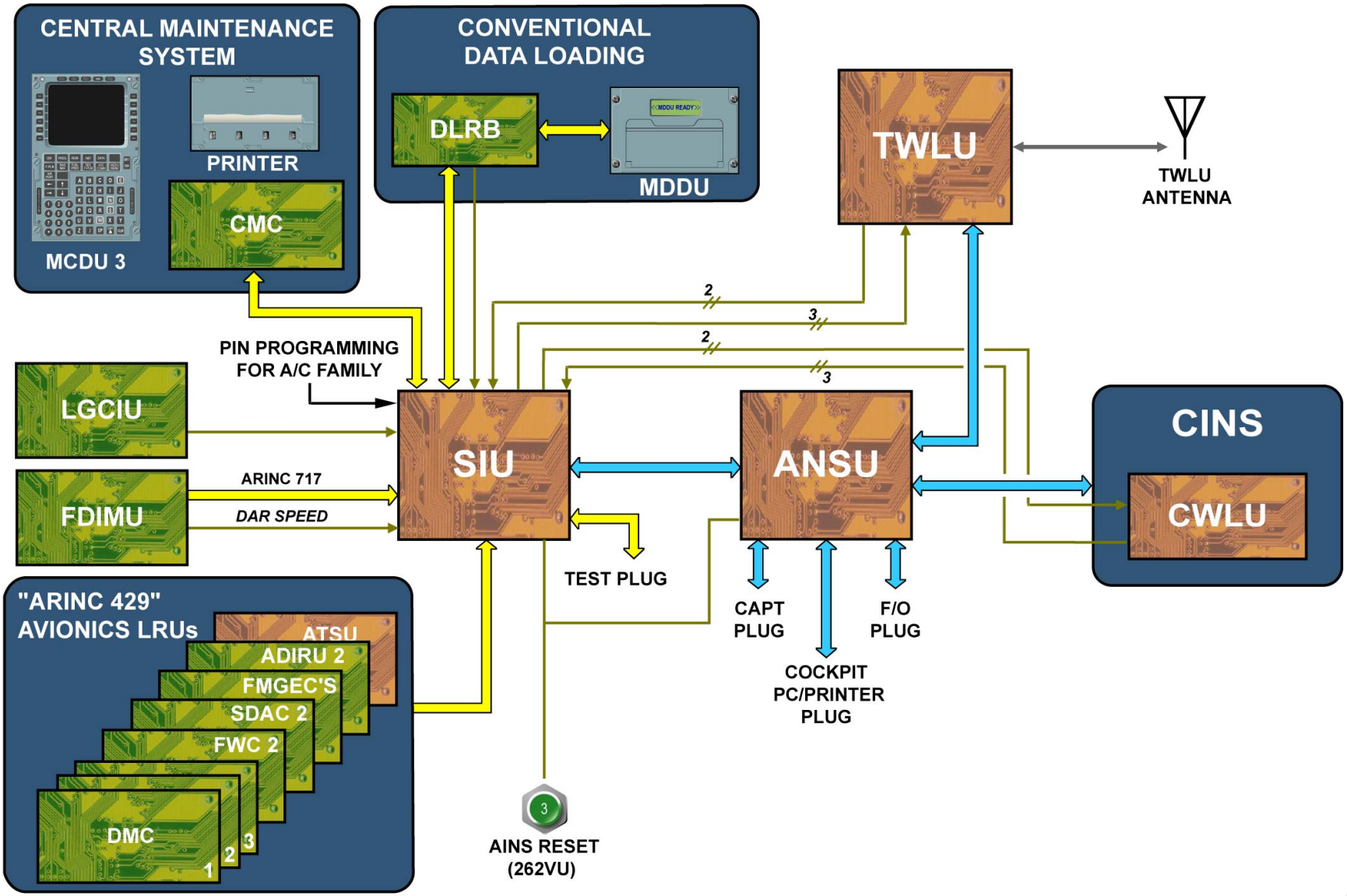
CENTRAL MAINTENANCE SYSTEM
PRINTER
CMC
MCDU 3
CONVENTIONAL DATA LOADING
DLRB
MDDU
TWLU
TWLU ANTENNA
PIN PROGRAMMING FOR A/C FAMILY
LGCIU
FDIMU
ARINC 717
DAR SPEED
SIU
ANSU
CINS
CWLU
TEST PLUG
CAPT PLUG
F/O PLUG
COCKPIT PC/PRINTER PLUG
"ARINC 429" AVIONICS LRUs
ATSU
ADIRU 2
FMGEC'S
SDAC 2
FWC 2
DMC
AINS RESET (262VU)

INTERFACES

INFORMATION SYSTEMS CINS D/O (3)

SYSTEM ARCHITECTURE

The Cabin Information Network System (CINS) has the following subsystems:
- the Cabin Network Service Unit (CNSU), which gives the system processing, data/file storage and network communication services to devices and systems. The CNSU is dedicated to cabin and passenger oriented, highly customized functionalities,
- the Ethernet Switch Unit (ESU), which connects the wired network between the connected systems,
- the Cabin Wireless LAN (CWL) system, which is made of two components; the Cabin Wireless LAN Unit (CWLU) and the antenna. The CWLU gives a wireless network connection between devices within the aircraft structure and those connected to the wired Ethernet Local Area Network (ELAN).

G7508471 - G7OT0T0 - FM46D4000000001

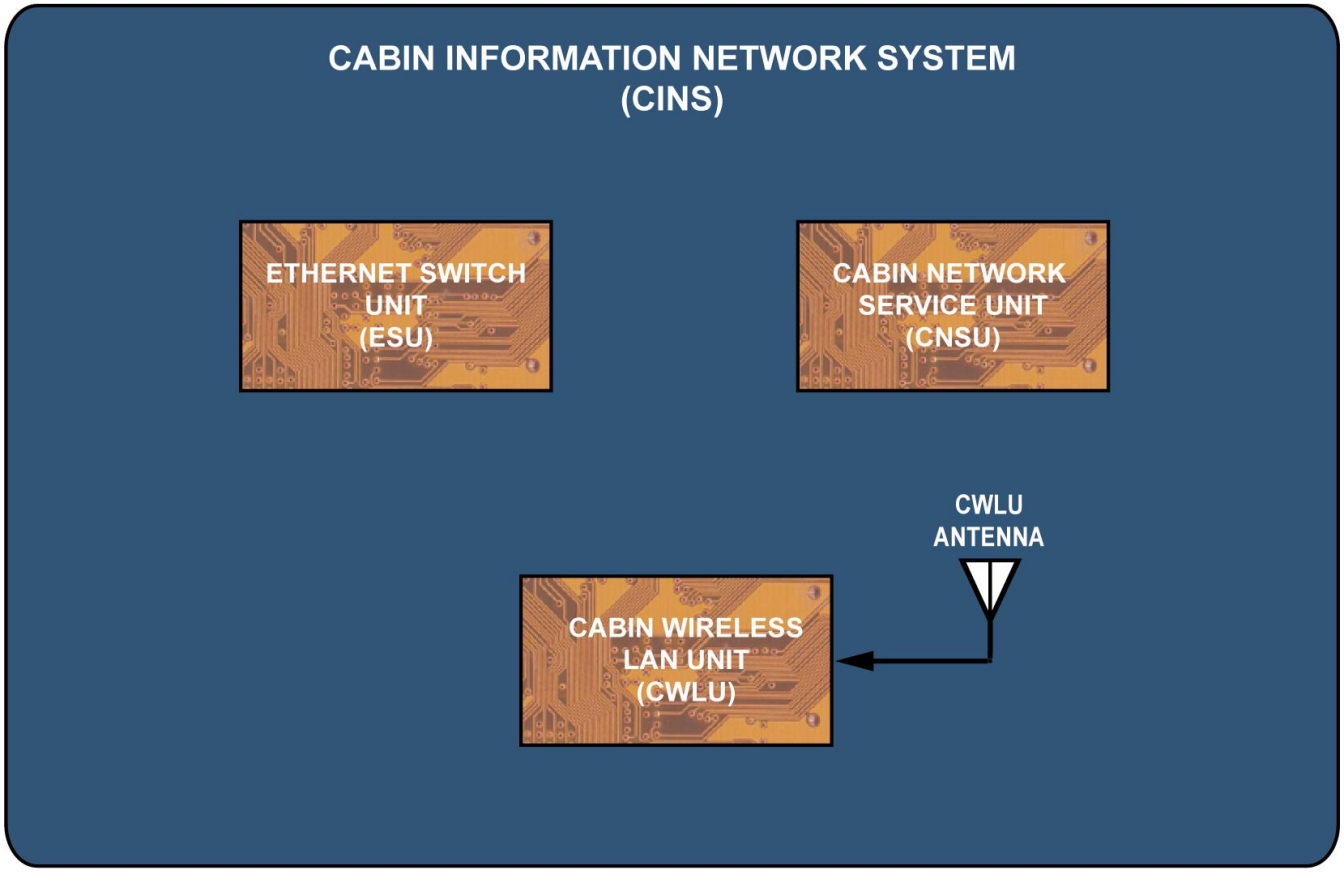

SYSTEM ARCHITECTURE

G7508471 - G7OT0T0 - FM46D400000001

INFORMATION SYSTEMS CINS D/O (3)

THE CNSU

The CNSU gives data processing and computing resources, data/file storage and network communication services to devices and systems. The CNSU hosts a variety of software applications. As a computing platform onboard the aircraft, it supplies high-speed communication and data exchange via wired and wireless Local Area Network (LAN).

G7508471 - G7OT0T0 - FM46D400000001

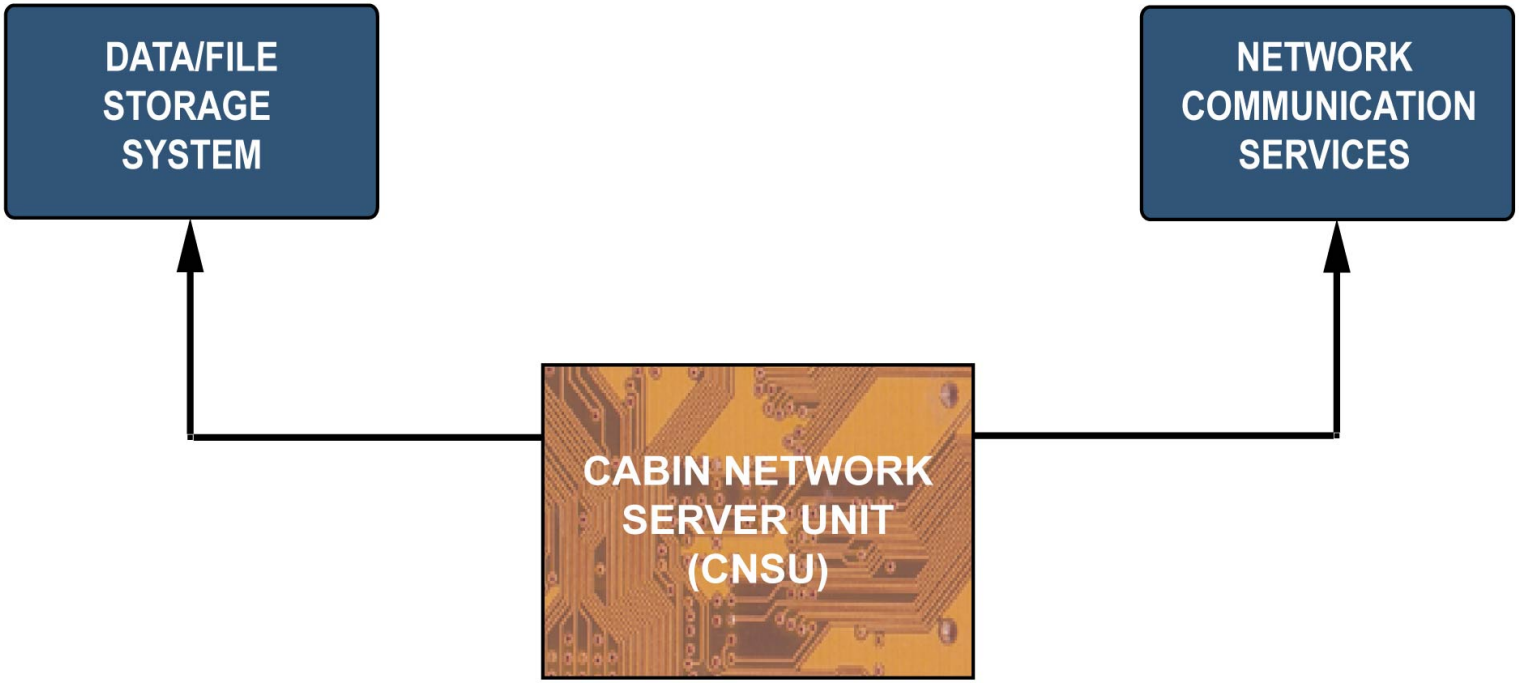

THE CNSU

G7508471 - G7OT0T0 - FM46D4000000001

INFORMATION SYSTEMS CINS D/O (3)

THE ESU

The ESU is the part of the CINS that controls the interfaces between the CINS and the systems and devices that are connected to the cabin Ethernet. Several ESUs may be installed in an aircraft for the connection of systems or devices based on Ethernet.

G7508471 - G7OT0T0 - FM46D400000001

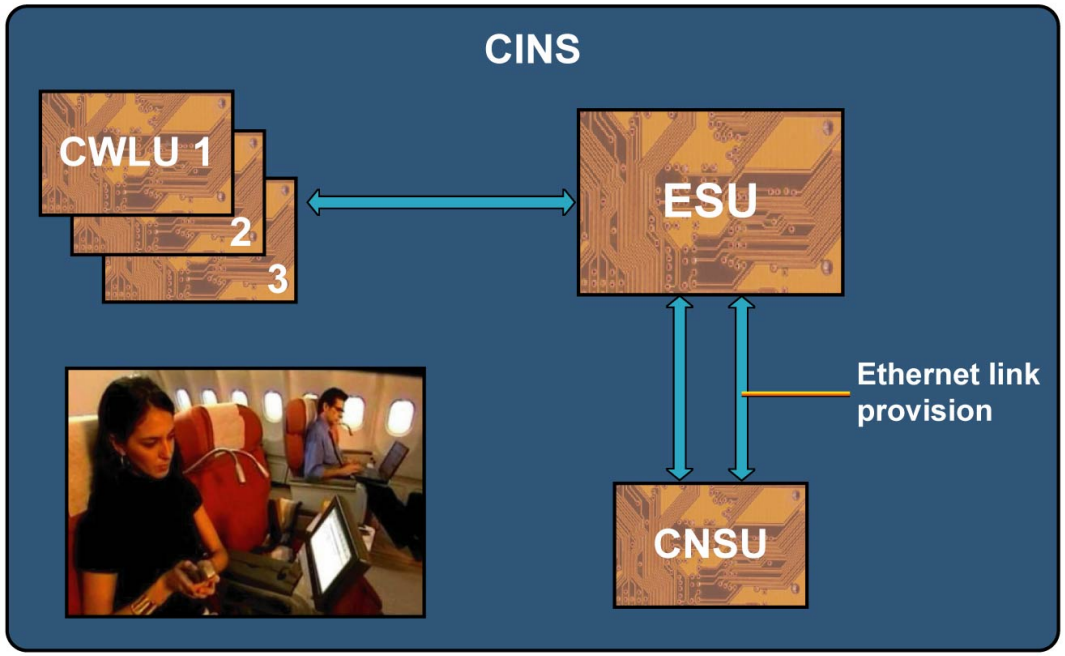

THE ESU

G7508471 - G7OT0T0 - FM46D400000001

INFORMATION SYSTEMS CINS D/O (3)

THE CWLU

The CWLU is designed to give the wireless network connectivity between computing devices within the aircraft and those connected to the wired ELAN. According to ARINC 763, the CWLU includes the cabin wireless LAN and one or more separated aircraft mounted antenna(s).

G7508471 - G7OT0T0 - FM46D400000001

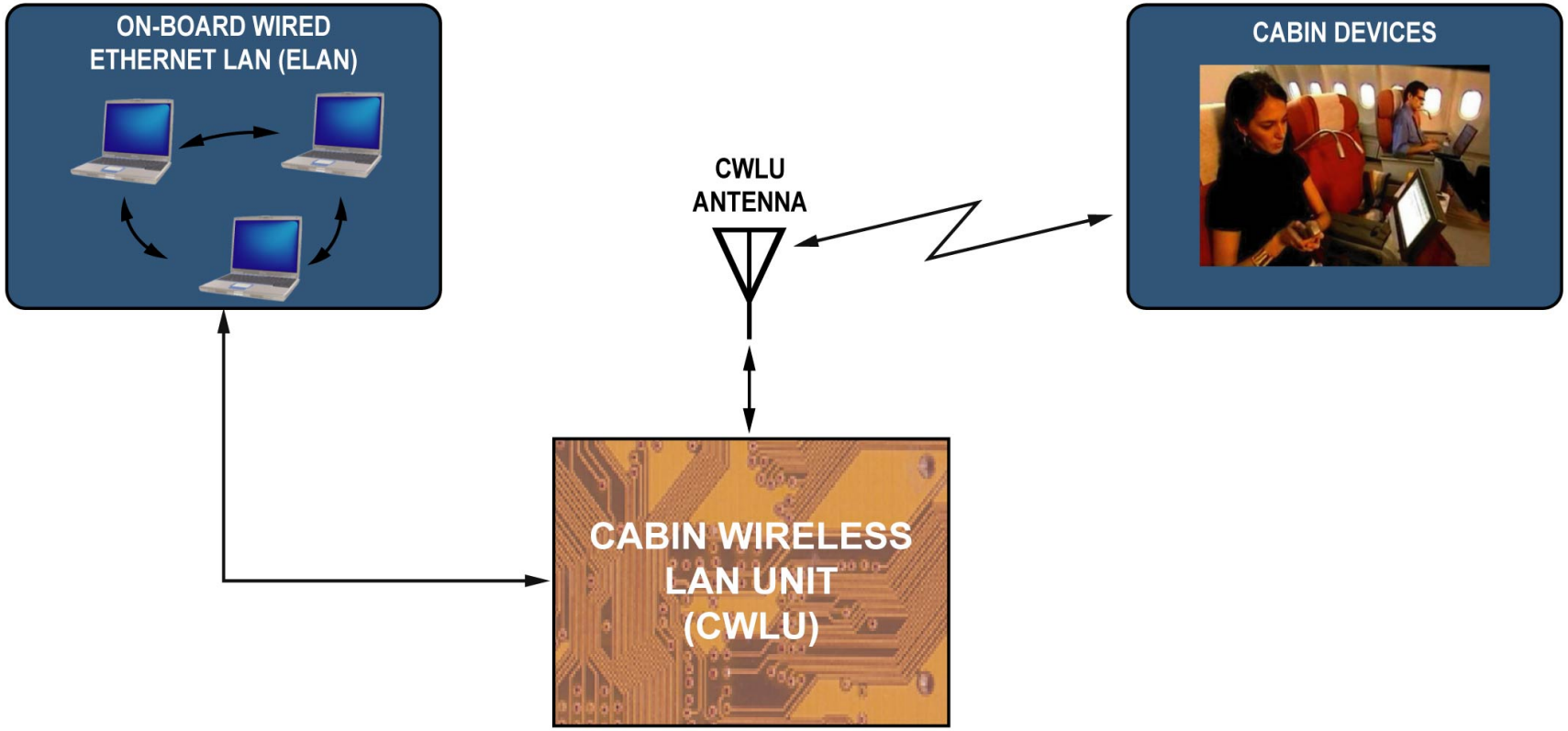

THE CWLU

G7508471 - G7OT0T0 - FM46D400000001

INFORMATION SYSTEMS CINS D/O (3)

POWER SUPPLY

The CNSU, the ESU and the CWLU are supplied with 115V AC/400Hz from the busbar 208XP via a Circuit Beaker.

G7508471 - G7OT0T0 - FM46D400000001

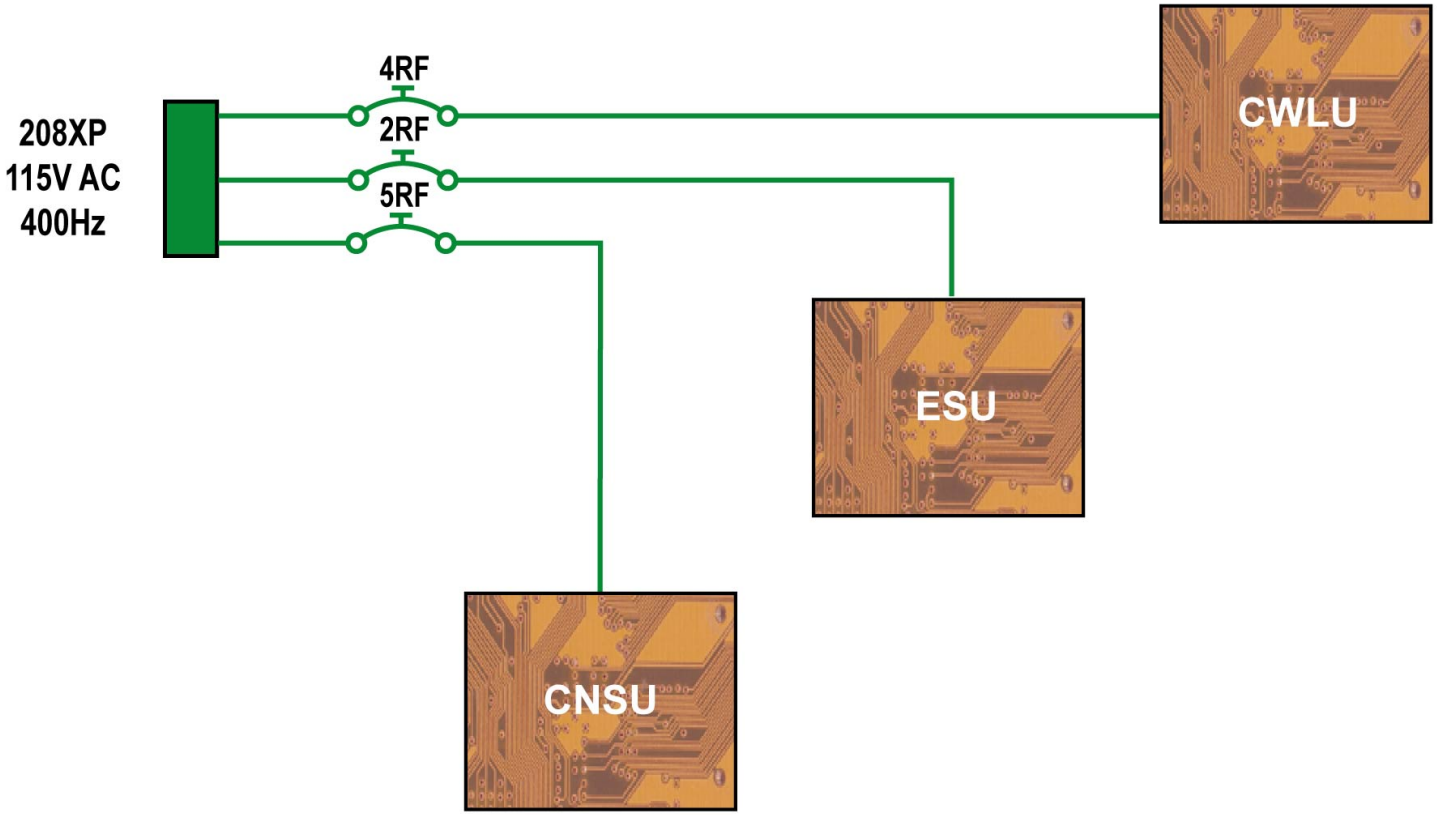

POWER SUPPLY

G7508471 - G7OT0T0 - FM46D400000001

INFORMATION SYSTEMS CINS D/O (3)

INTERFACES

The CINS has interfaces with the:
- Aircraft Information Network System (AINS),
- Flight Attendant Panel (FAP),
- In-Flight Entertainment (IFE) system,
- Cabin Telephone Unit (CTU),
- Satellite Communication (SATCOM) system,
- Landing Gear Control and Interface Unit (LGCIU),
- Central Maintenance Computer (CMC).

The CWLU is connected to the ESU via a 10 BaseT full duplex Ethernet link. The CNSU is connected to the ESU via two 10/100 BaseT full duplex Ethernet links. One connected and one backup. The ESU has eight 10/100 BaseT full duplex ports, and a 10/100 BaseT full duplex port for the cabin connector. A coaxial link connects the CWLU to the antenna.

G7508471 - G7OT0T0 - FM46D4000000001

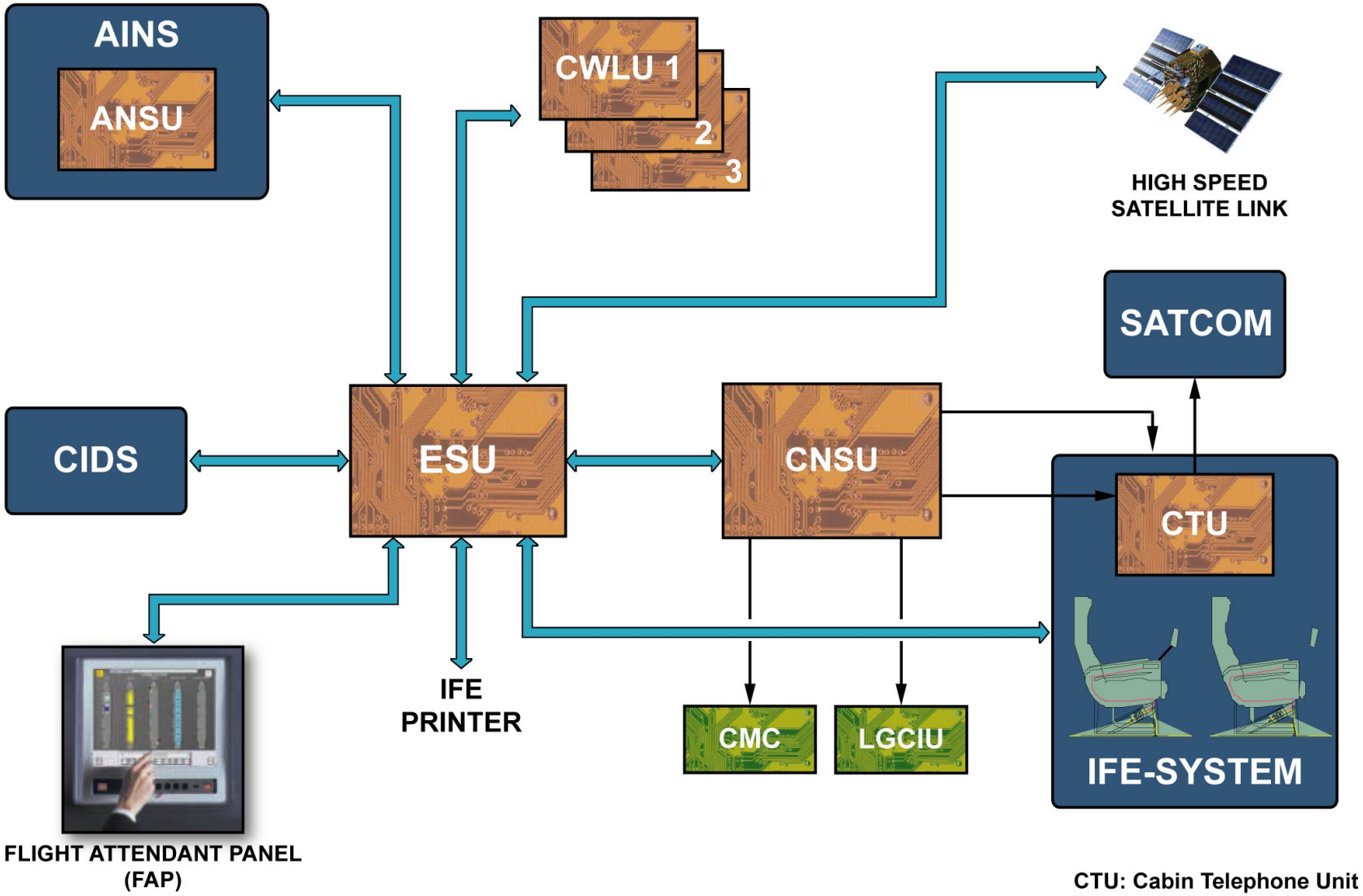

INTERFACES

G7508471 - G7OT0T0 - FM46D400000001

INFORMATION SYSTEMS MCDU PAGES (2)

GENERAL

The Air Traffic and Information Management System (ATIMS) maintenance menu is accessible using the INFORMATION SYSTEM prompt from the SYSTEM REPORT/TEST. The ATIMS BITE concentrates the failure information provided by the Air Traffic Service Unit (ATSU) and the Datalink Control and Display Unit (DCDU) internal monitoring. The ATIMS BITE information and test requests are transmitted to the Central Maintenance Computer (CMC) and available through MCDU menus.
The Aircraft Network Service Unit (ANSU) acts as a failure concentrator for the FlySmart with Airbus (FSA), Open World. The Server Interface Unit (SIU) acts as a failure concentrator for both Avionics World and Open World from the ANSU. The SIU collects failures detected, retrieves synthetic failures from the Open World through the ANSU and reports them to the CMC, which sends them to the MCDU in order to be displayed.

G7508471 - G7OT0T0 - FM46P2MCDUTST02

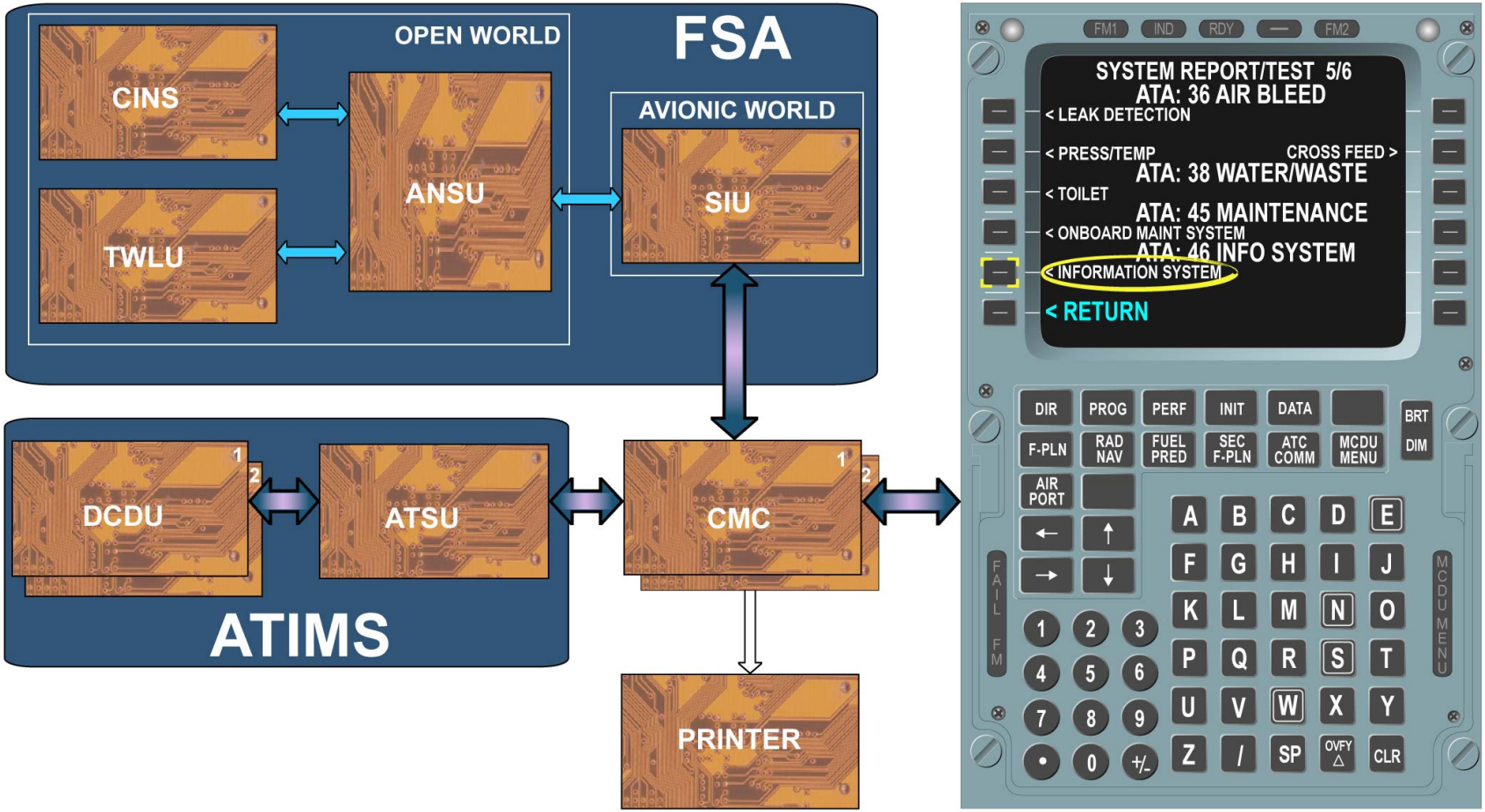
OPEN WORLD
FSA
CINS
ANSU
AVIONIC WORLD
SIU
TWLU
DCDU
ATSU
CMC
ATIMS
PRINTER
FM1
IND
RDY
FM2
SYSTEM REPORT/TEST 5/6
ATA: 36 AIR BLEED
< LEAK DETECTION
< PRESS/TEMP
CROSS FEED >
ATA: 38 WATER/WASTE
< TOILET
ATA: 45 MAINTENANCE
< ONBOARD MAINT SYSTEM
ATA: 46 INFO SYSTEM
< INFORMATION SYSTEM
< RETURN
DIR
PROG
PERF
INIT
DATA
BRT
DIM
F-PLN
RAD NAV
FUEL PRED
SEC F-PLN
ATC COMM
MCDU MENU
AIR PORT
FAIL FM
MCDU MENU
CLR

GENERAL

INFORMATION SYSTEMS MCDU PAGES (2)

AFIS MCDU PAGES

The AFIS BITE can be interrogated for failure report display and testing by selection of the ATA 46 INFO SYSTEM on the System Report/Test pages via the MCDU.
The interactive mode can only be activated on the ground. This mode enables communication between the Central Maintenance Computer (CMC) and the Airbus Information Network System (AINS) bite.
All information displayed on the MCDU during the BITE TEST configuration can be printed by the printer. Accessible from the main menu, the AINS interactive mode is composed of:
- the LAST LEG REPORT, which displays all the maintenance messages related to the Class 1 SIU and open world faults detected in flight during the last or current flight legs,
- the PREVIOUS LEGS REPORT, which displays all the maintenance messages related to the Class 1 SIU and open world faults detected in flight during the last or 63 flight legs,
- the LRU IDENT, which displays the part number, the serial number and the software number of the component,
- the TROUBLE SHOOTING DATA, which displays all the trouble shooting data related to the Class 1 SIU faults detected in flight during the last 64 flight legs including the current flight leg. The TSD related to the Class 3 faults detected in flight during the last or current flight leg are also displayed,
- the Last Leg Class 3 menu, which displays all the maintenance messages related to the Class 3 SIU and open world faults detected in flight during the last or current flight leg,
- the TEST activation shall only be allowed on the ground. The results of the test are transmitted to the CMS,
- the Ground REPORT menu, which displays all the maintenance messages related to the internal Class 1 or 3 SIU and open world faults detected on the ground during the last or current flight leg. This menu also permits access to the TROUBLE SHOOTING DATA only for SIU faults.

G7508471 - G7OT0T0 - FM46P2MCDUTST02

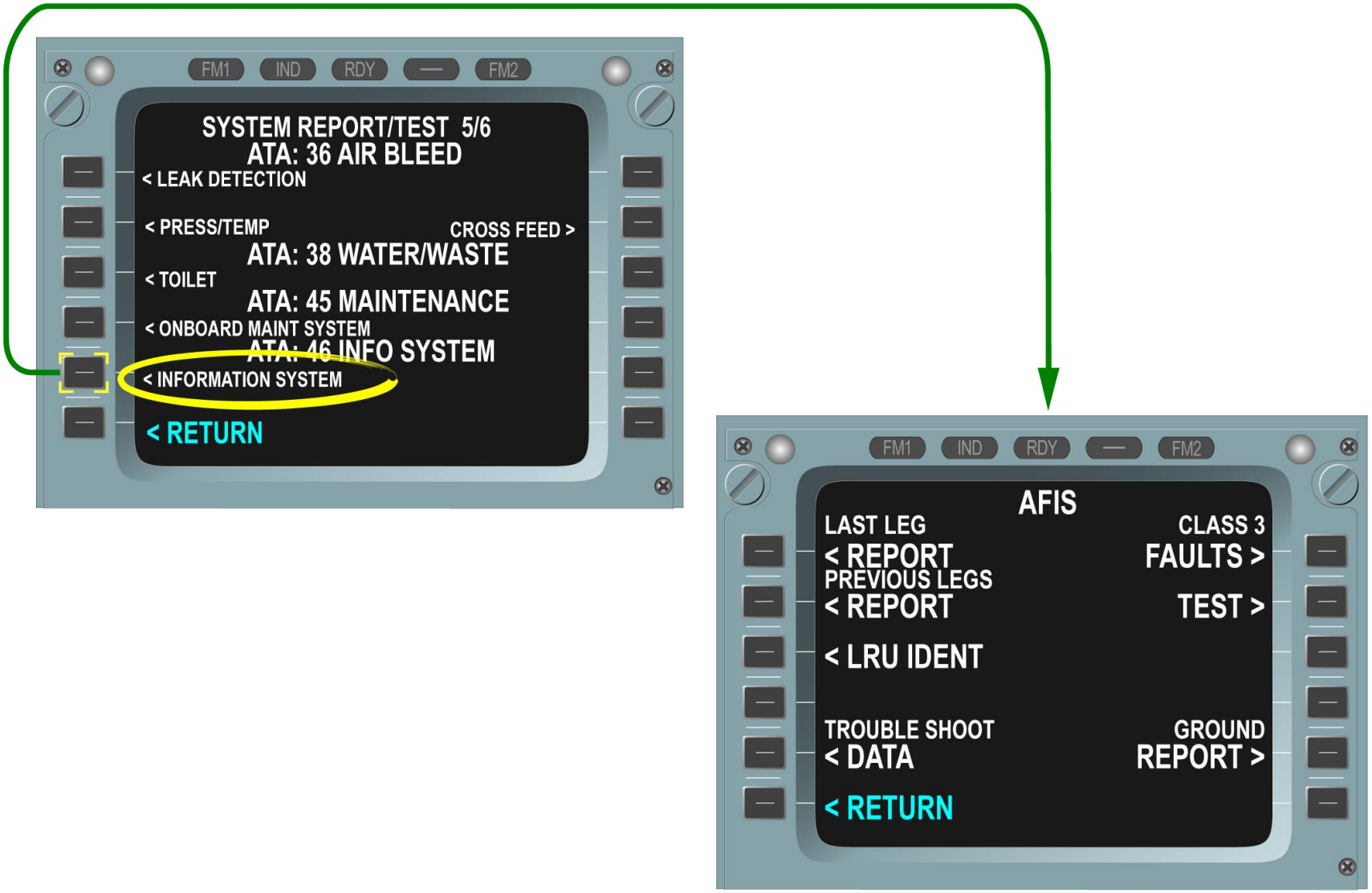

AFIS MCDU PAGES

G7508471 - G7OT0T0 - FM46P2MCDUTST02

INFORMATION SYSTEMS MCDU PAGES (2)

ATIMS MCDU PAGES

The ATIMS BITE can be interrogated for failure report display and testing by selection of the ATA 46 INFO SYSTEM on the System Report/Test pages.
The ATIMS is a Type 1 system with a BITE menu providing GND SCANNING and the following specific functions:
- the SYSTEM TEST allowing:
- DCDU self tests,
- ATSU Power on Self-Tests,
- ATSU Inputs/Outputs monitoring.
- the SPECIFIC DATA which:
- provides the status of the last upload,
- allows a check of the ATSU pin programming,
- downloads Trouble Shooting Data (TSD) via the Multipurpose Disk Drive Unit (MDDU),
- prints the list of ATSU software P/Ns.

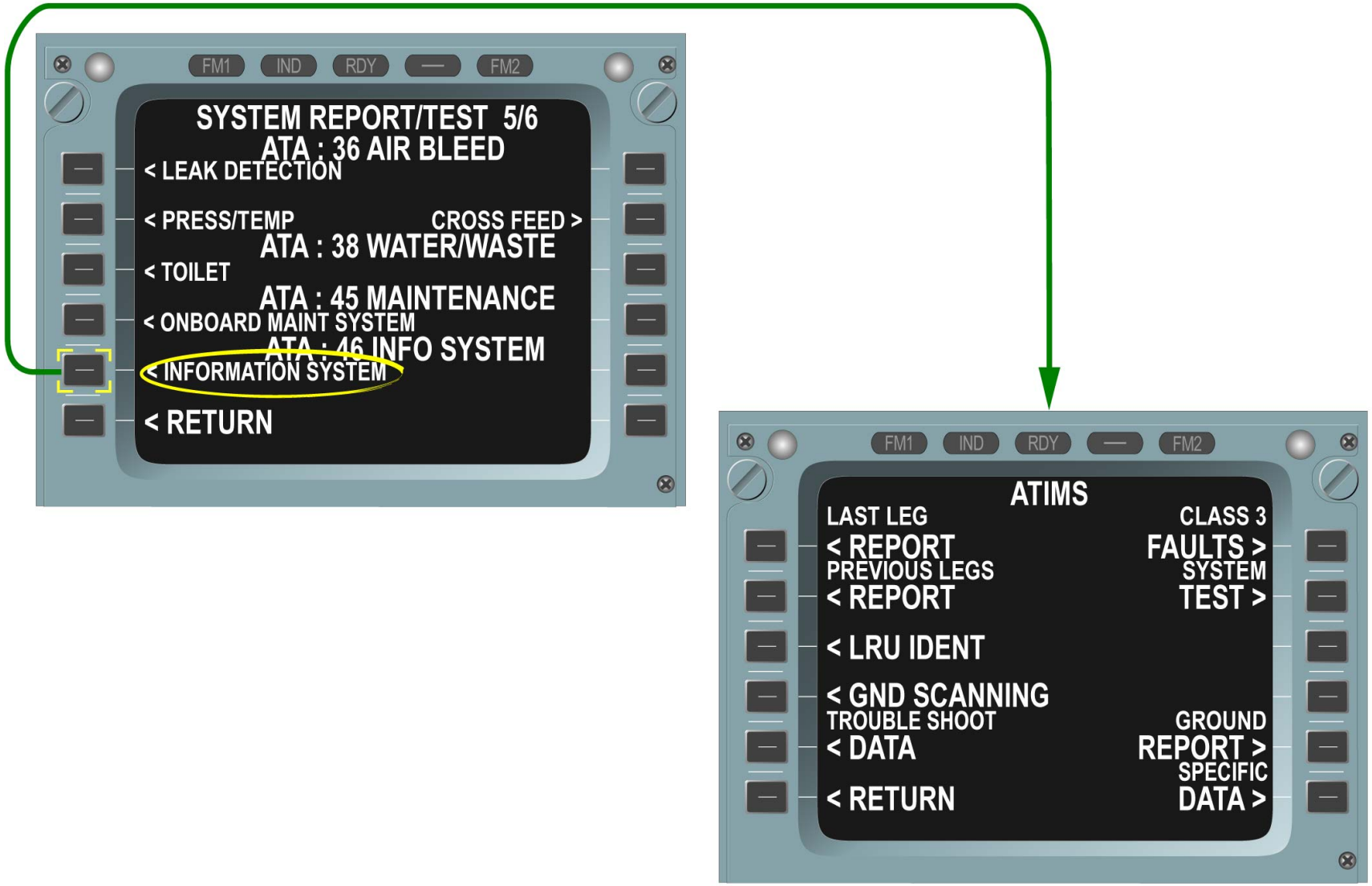

ATIMS MCDU PAGES

G7508471 - G7OT0T0 - FM46P2MCDUTST02

INFORMATION SYSTEMS BASE MAINTENANCE (3)

UPLOADING OF THE ATSU SOFTWARE PROCEDURES

CAUTION: In order to prevent the erasure of the Air Traffic Control (ATC) and Airline Operational Control (AOC) application software and associated database you must:
- first upload the Air Traffic Service Unit (ATSU) A/C INTERFACE software if needed,
- avoid changing the AC power source,
- avoid operating the Data Loading Selector (DLS) and the Multipurpose Disk Drive Unit (MDDU), during the software uploading.

NOTE: As the ATSU Future Air Navigation System applications (FANS A) are interactive, it is recommended to upload this software in a specific order to prevent generation of BITE messages.

CAUTION

THE ATSU INTEGRATES SEVERAL PIECES OF SOFTWARE AND MUST BE LOADED THROUGH THE MDDU IN THE FOLLOWING ORDER:
- ATSU A/C INTERFACE SOFWARE,
- AOC SOFTWARE, THEN AOC DATABASE,
- ATSU FANS A APPLICATIONS AND UTILITIES SOFTWARE.

THE SOURCE OF POWER SUPPLY MUST NOT BE CHANGED DURING UPLOADING.
THE DATA LOADING SELECTOR (DLS) MUST NOT BE OPERATED DURING UPLOADING.

Data Loading Selector (DLS)

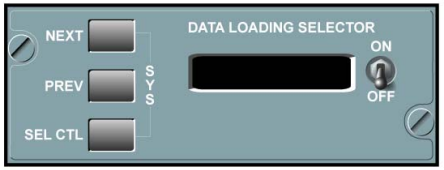

MCDU 100VU

MDDU

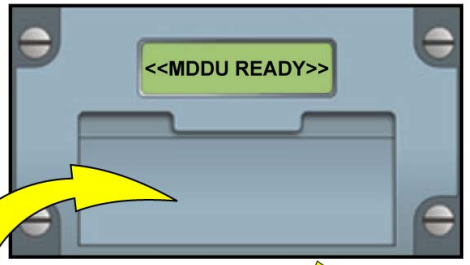

The operator must perform a check of the data reference loaded in the computer from the MCDU.
This is done approximately 1 minute after the uploading procedures, to make sure that the uploaded software is operational.

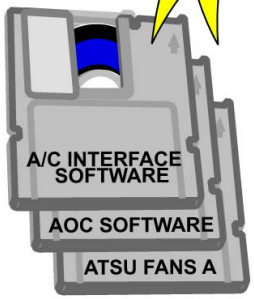

UPLOADING OF THE ATSU SOFTWARE PROCEDURES

INFORMATION SYSTEMS BASE MAINTENANCE (3)

UPLOADING OF THE ATSU SOFTWARE PROCEDURES (continued)

UPLOADING PREPARATION OF THE ATSU SOFTWARE WITH THE DLS

To upload the ATSU software with DLS, follow the procedure. Check that the MDDU is ready and switch the DLS ON. Then validate the task.
Check that the DLS is in standby mode and follow the procedure. Check that the ATSU is not selected on the DLS. Then validate the task.
Follow the procedure, as soon as the appropriate disk is inserted in the MDDU, the READY message, then the WAIT RESPONSE message are shown. Then validate the task.

Uploading of the ATSU Software with the Data Loading Selector (DLS).

CAUTION

Job set-up

Procedure

- On the overhead panel, on the DLS set the switch to ON.
- On the DLS push the PREV or NEXT key until you get the ATSU indication.
- Insert the appropriate disk in the MDDU, and check that WAIT RESPONSE is shown.

Close-up

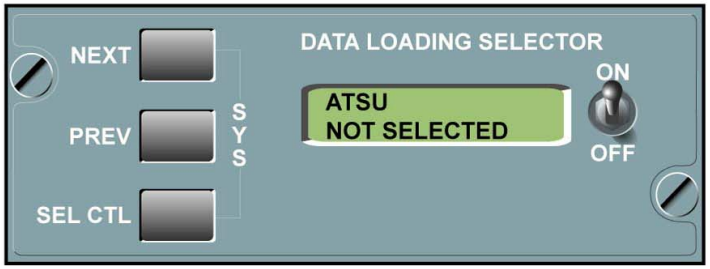

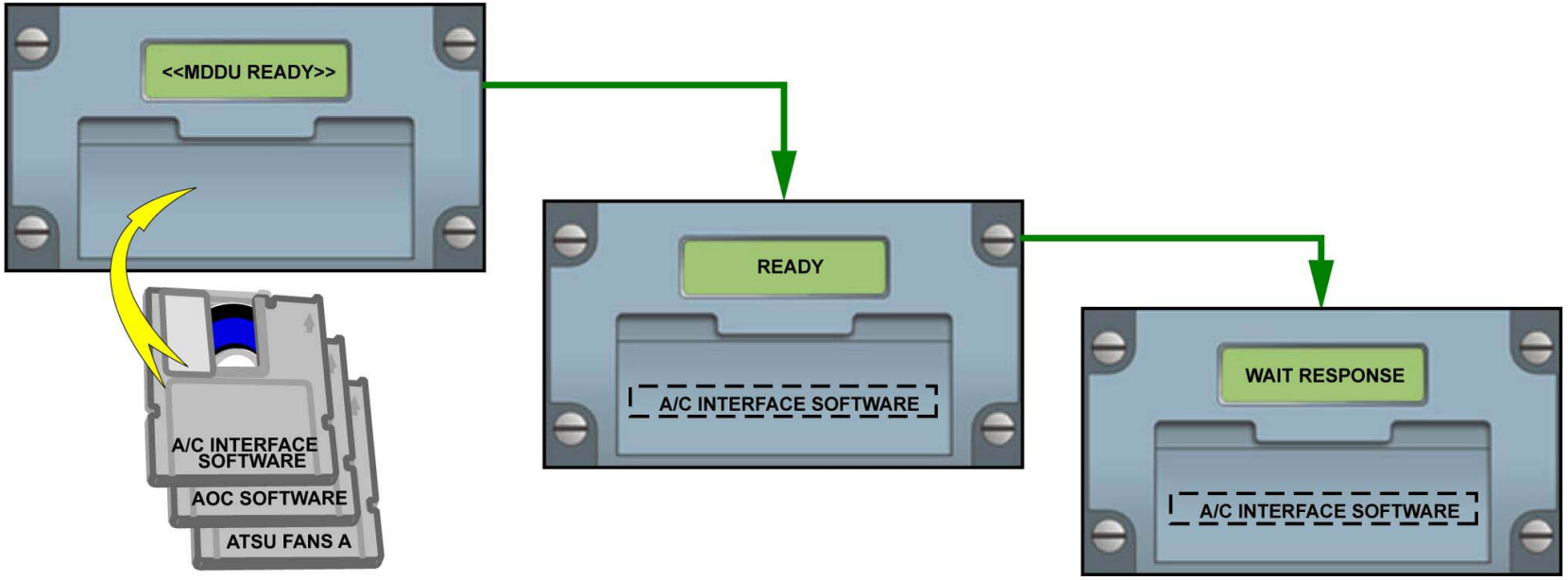

UPLOADING OF THE ATSU SOFTWARE PROCEDURES - UPLOADING PREPARATION OF THE ATSU SOFTWARE WITH THE DLS

INFORMATION SYSTEMS BASE MAINTENANCE (3)

UPLOADING OF THE ATSU SOFTWARE PROCEDURES (continued)

UPLOADING TRANSFER OF THE ATSU SOFTWARE WITH THE DLS

Follow the procedure. ECAM generates a DATALINK ATSU FAULT and an ATSU INIT FAULT message during uploading. The ATSU is selected, start the data transfer through the MDDU, then monitor and change the disk if necessary. Perform a check of the transfer completion. Note: The ECAM messages remain in view until you perform the ATSU ROUTER initialization. Then validate the task. Follow the procedure to deselect the ATSU. Then validate the task. Follow the procedure to remove the disk. When transfer is complete, the MDDU displays the READY message. Then validate the task. Follow the procedure to activate the ATSU Power-On Self Test (POST), which will validate and make the uploaded software operational. The task is complete.

Uploading of the ATSU Software with the Data Loading Selector (DLS).

CAUTION

Job set-up

Procedure

- On the overhead panel, on the DLS set the switch to ON.
- On the DLS push the PREV or NEXT key until you get the ATSU indication.
- Insert the appropriate disk in the MDDU, and check that WAIT RESPONSE is shown.
- On the DLS push the SEL CTL key.
- On the DLS push the SEL CTL key again.
- On the MDDU eject the disk from the disk drive.
- On the DLS set the switch to OFF.

Close-up

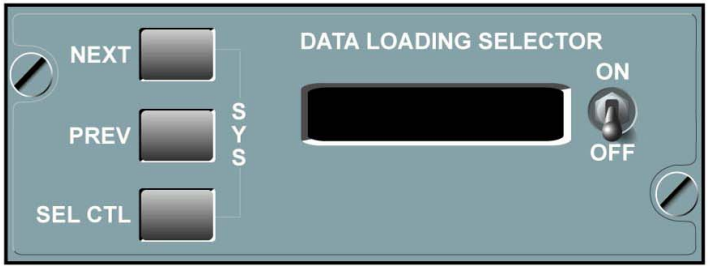

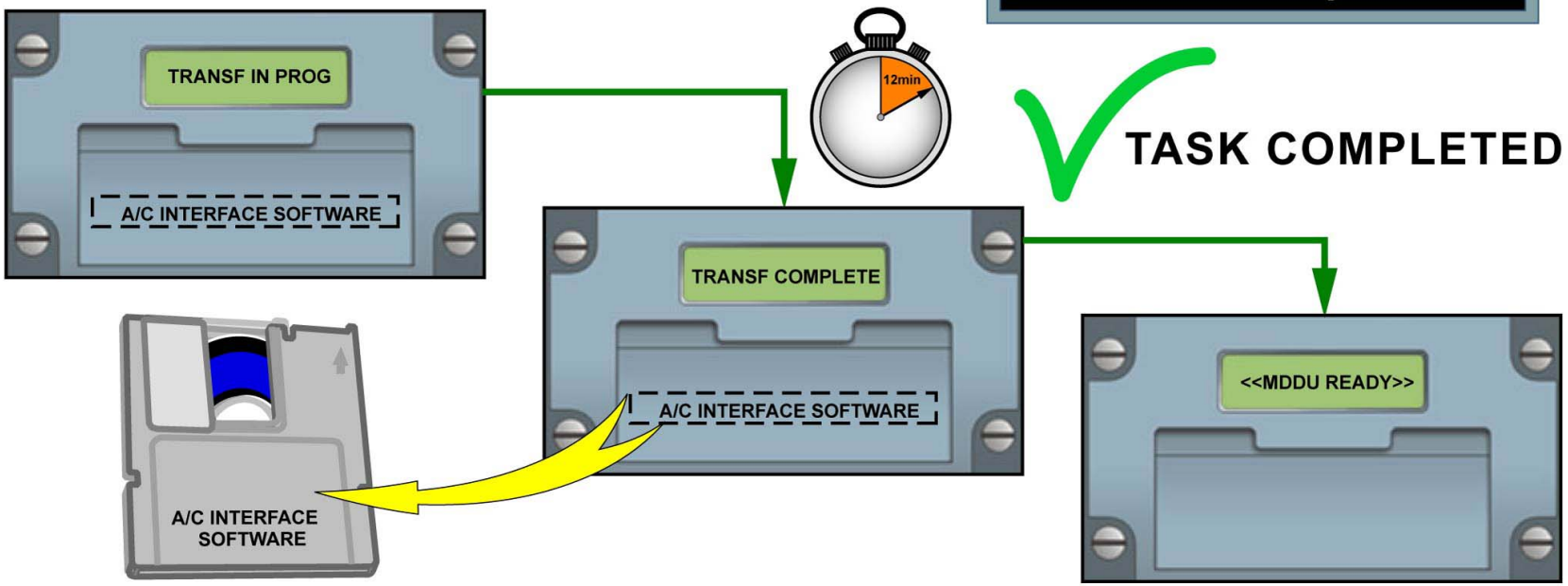

UPLOADING OF THE ATSU SOFTWARE PROCEDURES - UPLOADING TRANSFER OF THE ATSU SOFTWARE WITH THE DLS

INFORMATION SYSTEMS BASE MAINTENANCE (3)

UPLOADING OF THE ATSU SOFTWARE PROCEDURES (continued)

CHECK OF THE REFERENCE OF THE ATSU SOFTWARE LOADED IN THE ATSU

The SYSTEM REPORT/TEST page allows, by pressing the INFORMATION SYSTEM key, access to the Air Traffic and Information Management System (ATIMS) page. Then validate the task.
Follow the procedure. Select the LRU IDENT key to display A/C INTERFACE software and FANS A application software references. Then, make sure that the P/N references displayed on the LRU IDENT page are the same as the P/N references read on the disk. The task is complete.

NOTE: Remember, wait till the end of the ATSU POST to make sure that the uploaded software is operational.

Check of the reference of the ATSU software loaded in the ATSU.
...
✓ CAUTION
...
Job set-up
...
✓ Procedure
...
✓ - On the MCDU page push the line key adjacent to the INFORMATION SYSTEM.
✓ - Push the line key adjacent to the LRU IDENT identification.

Close-up
...

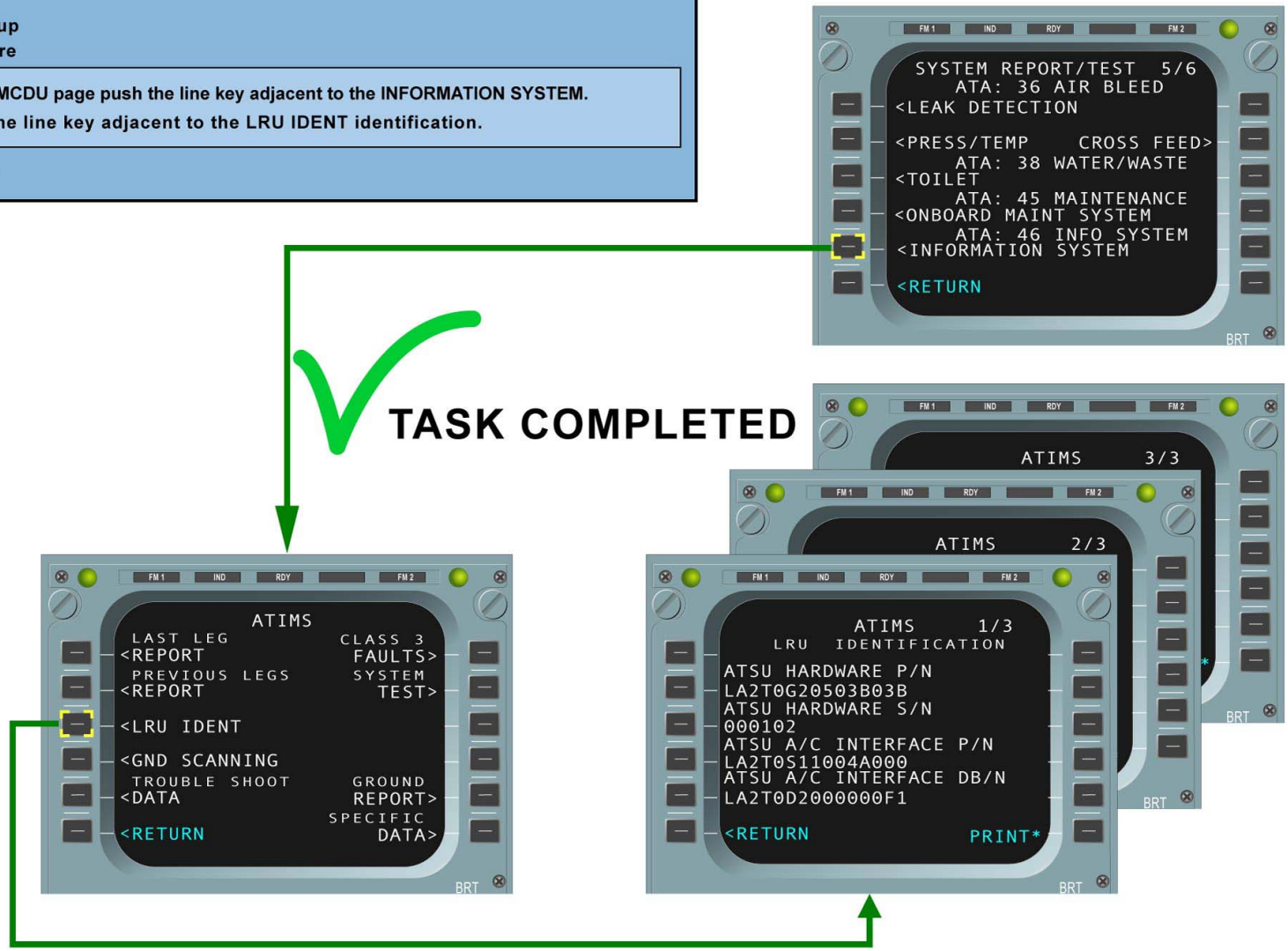

UPLOADING OF THE ATSU SOFTWARE PROCEDURES - CHECK OF THE REFERENCE OF THE ATSU SOFTWARE LOADED IN THE ATSU

INFORMATION SYSTEMS BASE MAINTENANCE (3)

UPLOADING OF THE ATSU SOFTWARE PROCEDURES (continued)

CHECK OF THE REFERENCE OF THE AOC SOFTWARE & DATABASE LOADED IN THE ATSU

After accessing the ATSU DATALINK from MCDU MENU, press the AOC MENU select key, to display the AOC PRE-FLIGHT MENU page. Then validate the task.
Follow the procedure. Press the MISC selection key, to access the AOC MISCellaneous page. Then validate the task.
Follow the procedure. Press the PART NUMBERS CONFIGURATION selection key to access the AOC MISCELLANEOUS page. Then, make sure that the AOC software and database P/N references displayed on the AOC CONFIGURATION page are the same as the P/N references read on the disk. The task is complete.

Check the reference of the AOC software & database loaded in the ATSU.

CAUTION

Job set-up

Procedure

- On the ATSU DATALINK page push the line key adjacent to the AOC MENU.
- Push the selection key corresponding to MISC.
- Push the selection key corresponding to PART NUMBERS CONFIGURATION.

Close-up

TASK COMPLETED

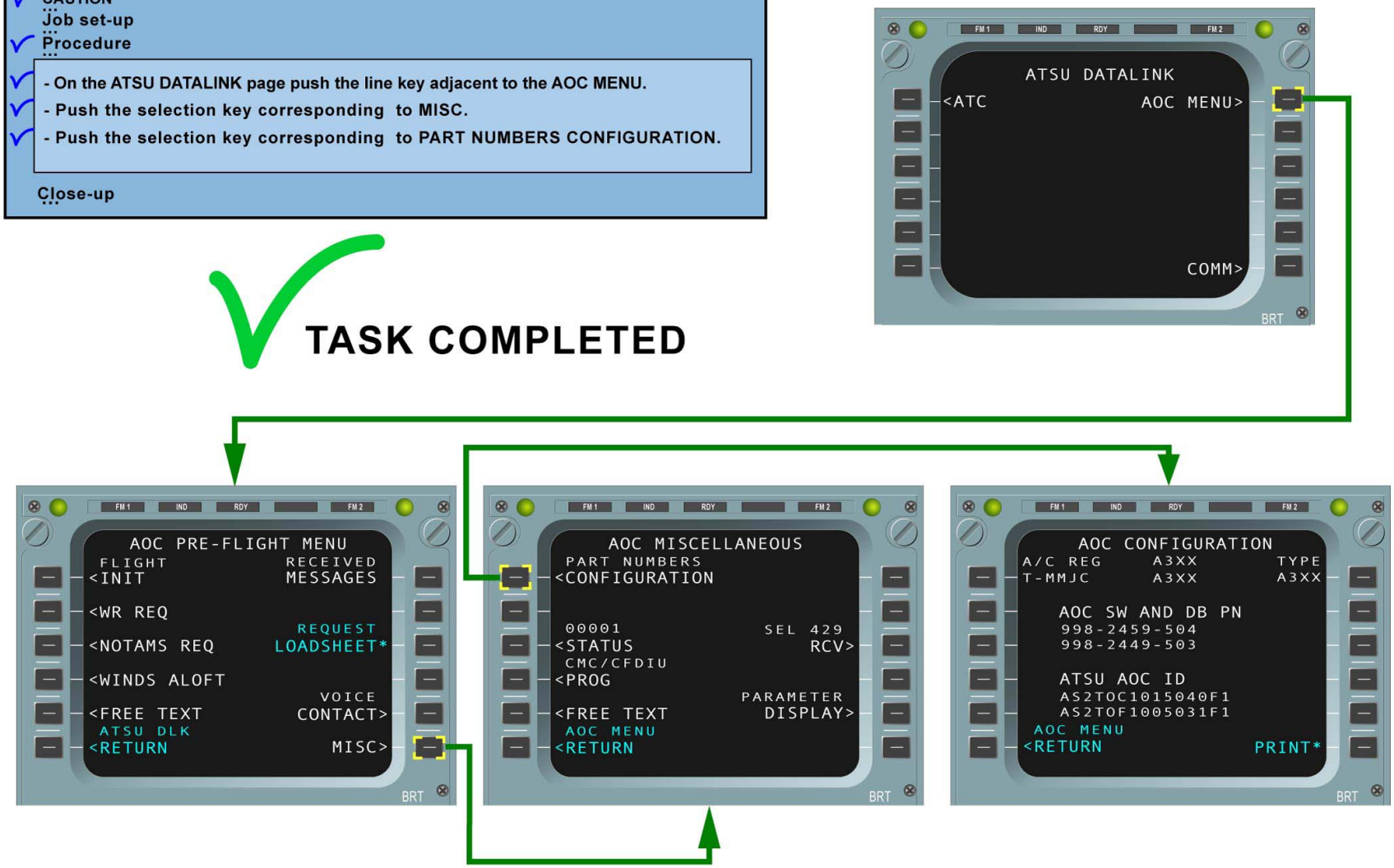

UPLOADING OF THE ATSU SOFTWARE PROCEDURES - CHECK OF THE REFERENCE OF THE AOC SOFTWARE & DATABASE LOADED IN THE ATSU

AIRBUS S.A.S.
31707 BLAGNAC cedex, FRANCE
STM
REFERENCE G7508471
NOVEMBER 2008
PRINTED IN FRANCE
AIRBUS S.A.S. 2008
ALL RIGHTS RESERVED

AN EADS COMPANY

A330-200/300
TECHNICAL TRAINING MANUAL
MAINTENANCE COURSE - T1 (LVL 2&3) (RR Trent 700)
APU

This document must be used for training purposes only

Under no circumstances should this document be used as a reference

It will not be updated.

All rights reserved
No part of this manual may be reproduced in any form,
by photostat, microfilm, retrieval system, or any other means,
without the prior written permission of AIRBUS S.A.S.

AIRBUS Environmental Recommendation
Please consider your environmental responsability before printing this document.

APU

APU Line Maintenance Briefing (2) 2
APU General D/O (3) 20
APU Fuel D/O (3) 34
APU Air D/O (3) 38
APU Oil D/O (3) 40
APU Operation, Ignition and Starting D/O (3) 64

APU LINE MAINTENANCE BRIEFING (2)

SYSTEM OVERVIEW

The Auxiliary Power Unit (APU) is located in the unpressurized tail cone. The APU is a self-contained unit, which lets the aircraft be independent of external pneumatic and electrical power sources. The APU is mounted in a fireproof compartment located in the fuselage tail cone. Two access doors give access to the APU compartment for inspection and maintenance task. The APU is hanged in its compartment by shock-mounts. An exhaust duct releases the APU gas into the atmosphere.

The APU is a constant-speed gas turbine engine. The constant-speed gas turbine engine drives the accessory gearbox and a load compressor. The APU provides:

- electrical power for the aircraft systems,
- bleed air for engine starting and air conditioning on the ground,
- bleed air for air conditioning / pressurization and wing anti-ice in flight.

The APU air intake flap is mounted on the lower fuselage forward of the APU. The intake flap opens when the APU master switch is selected ON and closes when the master switch is selected OFF. When open, it supplies air to the APU inlet for combustion and pneumatic supply.

The APU operation is controlled and monitored by the Electronic Control Box (ECB). The ECB has full authority over the following APU functions:

- starting,
- acceleration,
- speed governing,
- indication,
- fault monitoring,
- interface with A/C systems.

The APU is designed to operate throughout the entire flight envelope. Electrical power is available whenever the APU operates, but bleed air is limited by the demand and is shut off above approximately 23.000 ft.

G7508471 - G3NT1T0 - FM49B1000000001

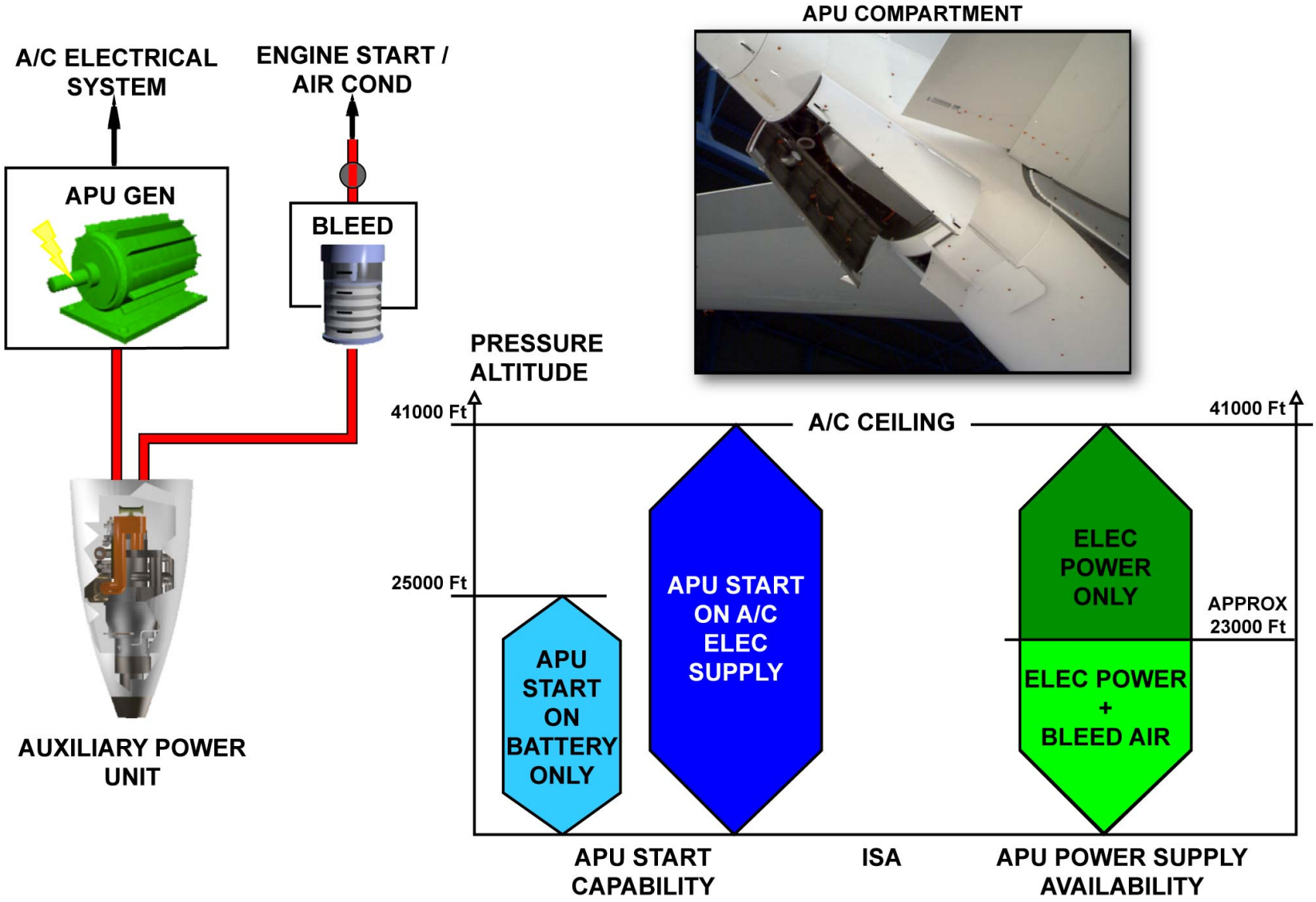

SYSTEM OVERVIEW

G7508471 - G3NT1T0 - FM49B100000001

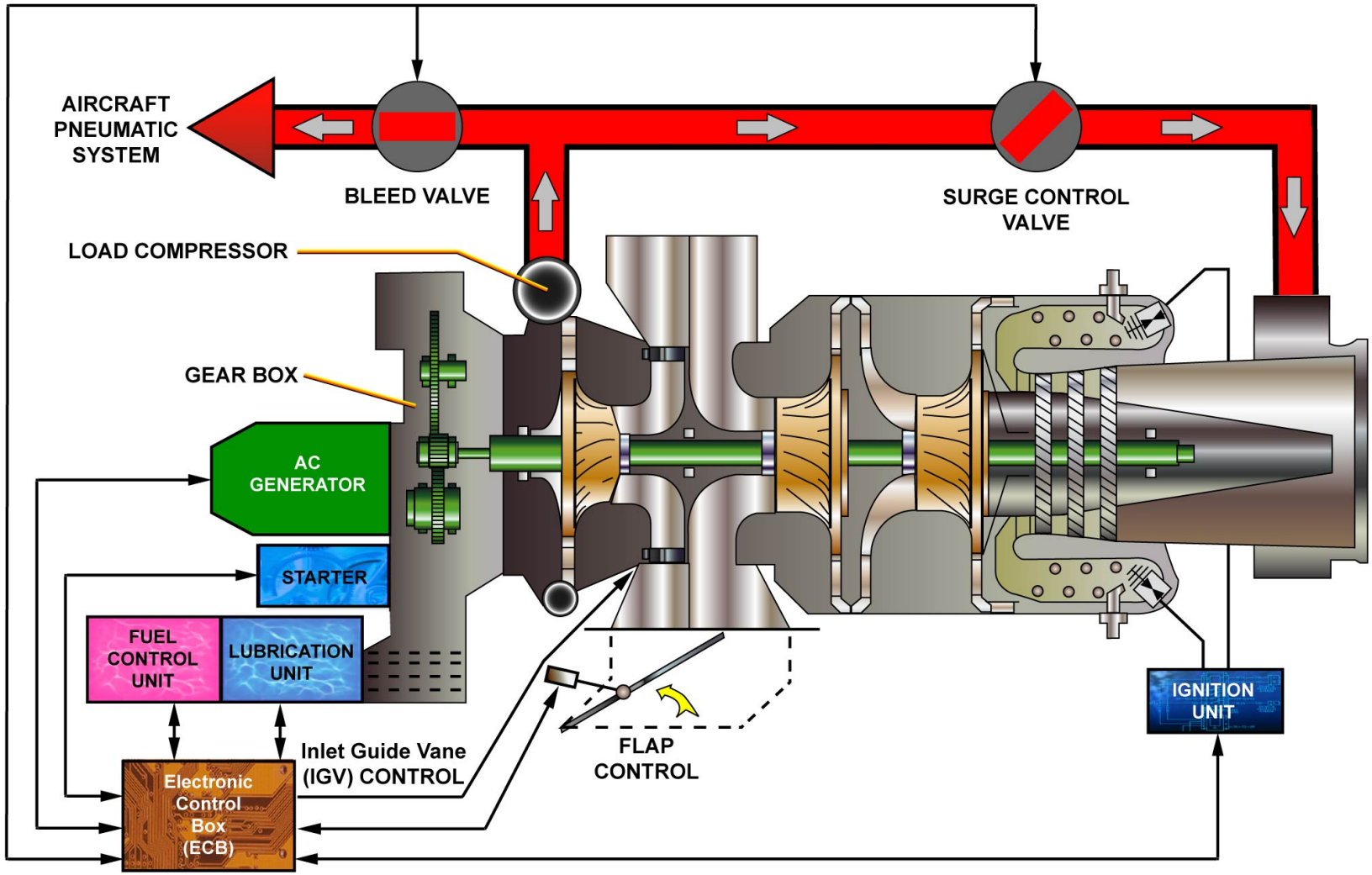

SYSTEM OVERVIEW

G7508471 - G3NT1T0 - FM49B1000000001

This Page Intentionally Left Blank

G7508471 - G3NT1T0 - FM49B1000000001

APU LINE MAINTENANCE BRIEFING (2)

SERVICING

APU ACCESS DOOR OPENING & CLOSING

The APU cowl doors are secured with three quick-release hook latches fasteners and four pin latches. The hook latches secure the doors together and the pin latches secure the doors to the aircraft structure.
Procedure to open the doors:
- release 3 hook latches,
- support the door and release the 2 pin latches of each door,
- use support struts to secure the doors.

To close the access doors, release the support struts. Support the doors, close the hook latches and then close the pin latches.

G7508471 - G3NT1T0 - FM49B1000000001

APU COMPARTMENT

HOOK LATCHES

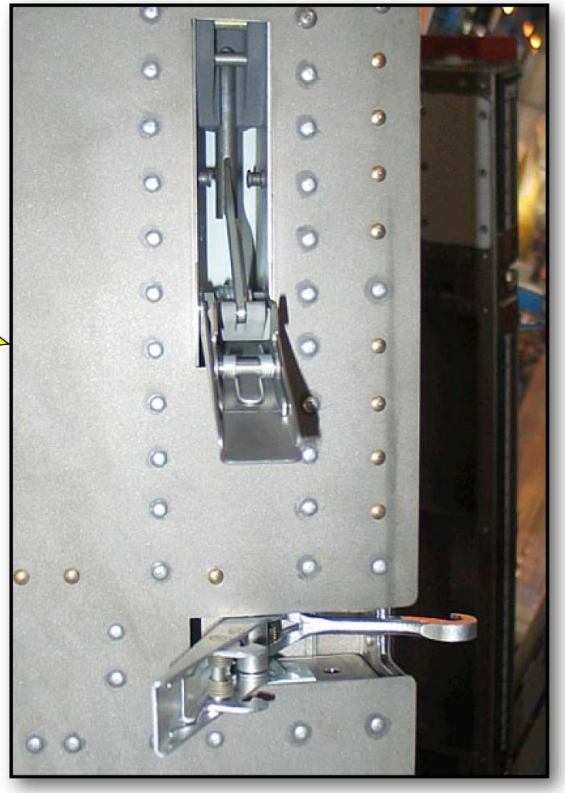

SERVICING - APU ACCESS DOOR OPENING & CLOSING

APU LINE MAINTENANCE BRIEFING (2)

SERVICING (continued)

APU OIL SERVICING

APU oil servicing is accomplished on an "as-needed" basis or after scheduled oil quantity checks. The ECB monitors the oil level status via the low oil quantity switch when the A/C is on ground, the APU not is not running and when the power-up initialization is finished, a few seconds after the APU MASTER SW is pressed in.
Three conditions of the oil level are represented on the EIS and on the Centralized Maintenance System (CMS):
- if an OIL LEVEL: OK indication is displayed on the APU SERVICE DATA page of the CMS, and if no indication is displayed on the ECAM APU page, the oil level is sufficient.
- if an OIL LEVEL: CHECK indication is displayed on the APU SERVICE DATA page of the CMS, and if a CHECK OIL LEVEL message appears on the ECAM APU page, the oil level allows an APU operation for 60 hours.
- finally, if an OIL LEVEL: LOW indication is displayed on the APU SERVICE DATA page of the CMS, and if a LOW OIL LEVEL message appears on the ECAM APU page, the oil level is at its minimum and the APU oil reservoir needs to be refilled.
The APU LOW OIL LEVEL message agrees with the ADD mark on the oil reservoir (gearbox) sight glass.
Prior to servicing, shut down the APU and open the APU access doors. Make sure to use the operator-approved oil for servicing (operators may be selected from the approved list). The oil may be serviced by the gravity (most common) or pressure fill procedure (OPTIONAL).

NOTE: To get an accurate oil level indication, do not wait longer than 5-15 minutes after the APU shutdown before checking the APU oil.

Gravity procedure:
- open the lock and slowly loosen the oil filler cap to release remaining pressure from the oil reservoir,
- check sight glass for level,
- slowly add oil until the level is at the FULL mark on the sight glass,
- close and lock the oil filler cap.

Pressure fill procedure:
- check sight glass for level,
- connect pressure and overfill hoses to the APU gearbox,
- slowly pump oil into the gearbox until the level is at the FULL mark on the sight glass,
- remove pressure and overfill hoses.

G7508471 - G3NT1T0 - FM49B1000000001

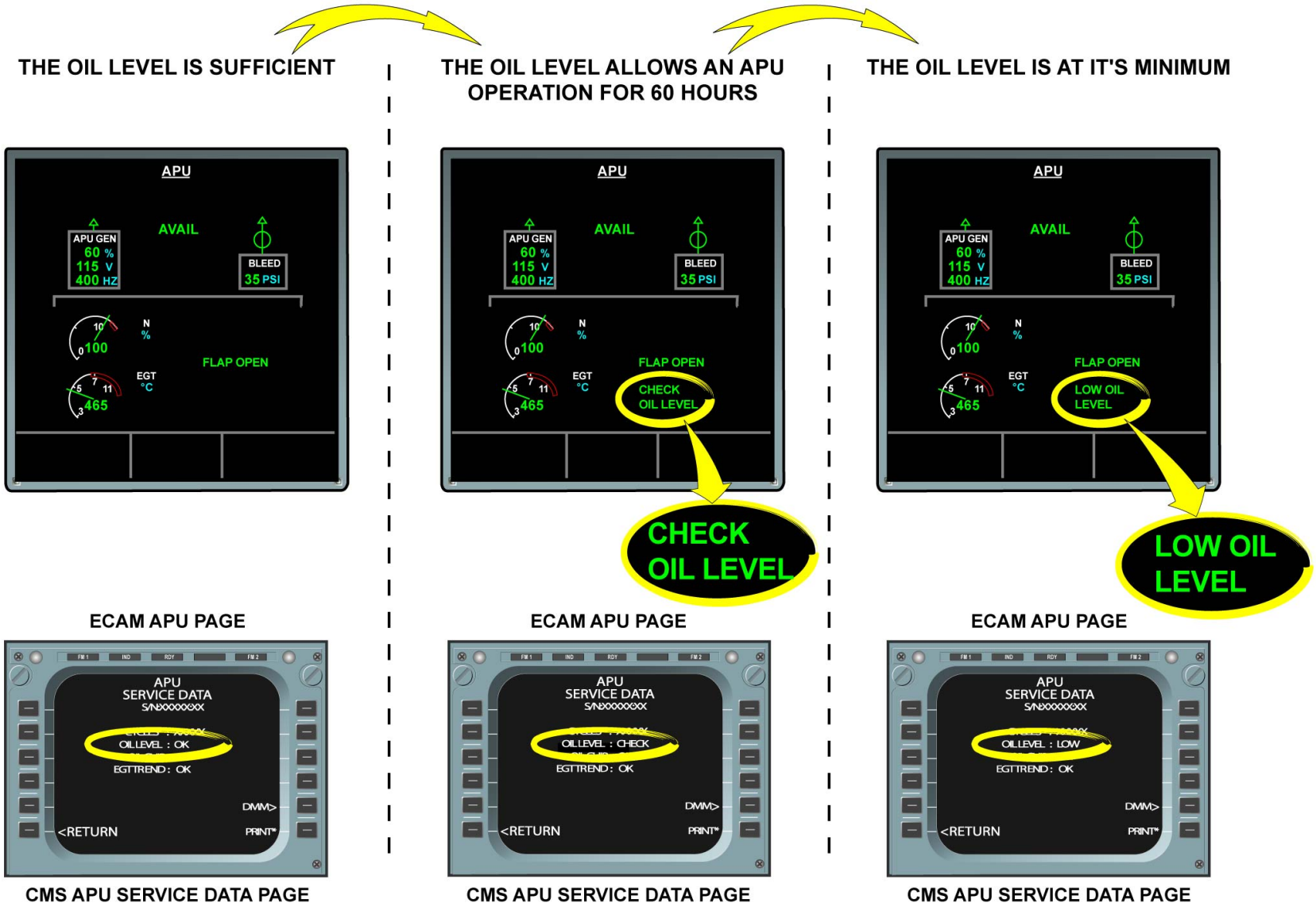

SERVICING - APU OIL SERVICING

G7508471 - G3NT1T0 - FM49B1000000001

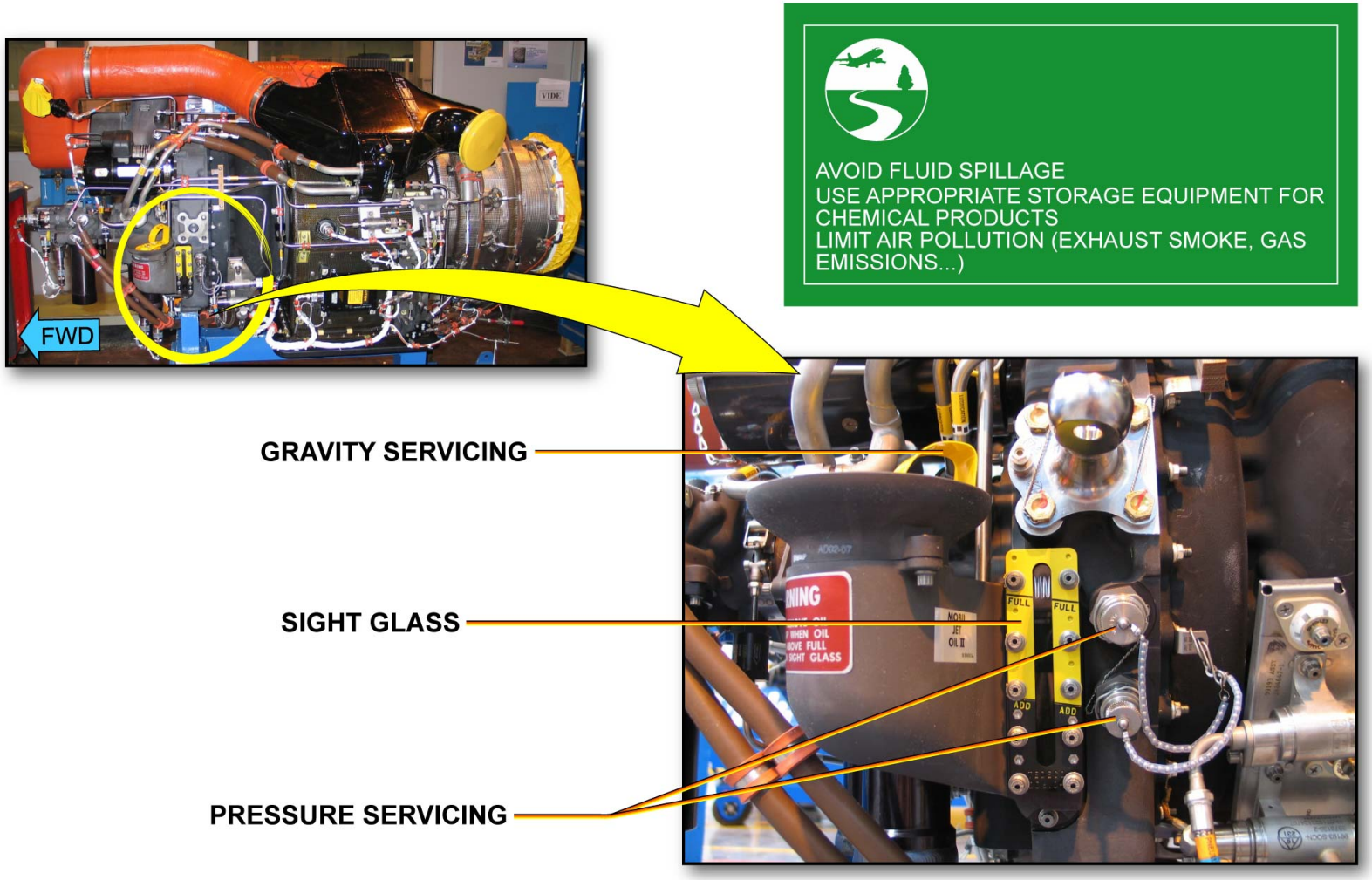

SERVICING - APU OIL SERVICING

This Page Intentionally Left Blank

G7508471 - G3NT1T0 - FM49B1000000001

APU LINE MAINTENANCE BRIEFING (2)

MEL/DEACTIVATION

In case of an APU inlet actuator failure, the APU may be dispatched per Minimum Equipment List (MEL) with the inlet CLOSED or OPEN. If the inlet is deactivated CLOSED, the APU will not be operational. The APU is only operational with the inlet deactivated OPEN - limited to 10 days as per the MEL. The air inlet flap actuator has a manual drive. In case of failure the manual drive may be used to move the inlet to the required position prior to the deactivation. Access to the actuator is through an access door near the APU inlet on the left hand side of the fuselage. The actuator requires 87 turns of the manual drive for one full travel of the inlet flap.
Deactivation procedure:
- get access to the actuator,
- disconnect the actuator electrical connector from the fixed connector on the frame and install a blanking cap,
- use the manual drive to move the inlet to the required position. Use a torque wrench to avoid damage to the actuator.

NOTE: Note: If the inlet is deactivated CLOSED, no further action is needed other than to placard the APU inop. If the inlet is deactivated OPEN, the following procedure has to be accomplished.

When the inlet is in the OPEN position, a jumper lead needs to be installed to close the circuit and allow the APU to start. Make a dummy connector and paint it red for easy identification.
Close the access door and make the APU operational test:
- make the BITE test,
- check SERVICE DATA,
- start the APU and check for normal parameters.

G7508471 - G3NT1T0 - FM49B100000001

ACCESS TO FLAP ACTUATOR

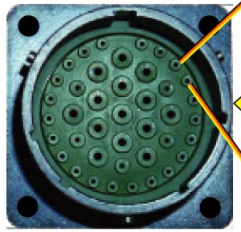

DUMMY CONNECTOR

MANUAL OVERRIDE

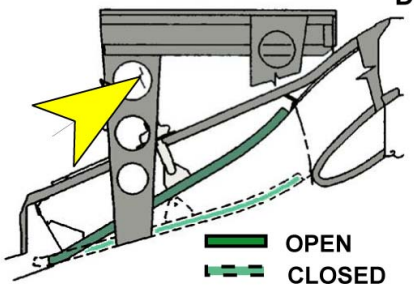

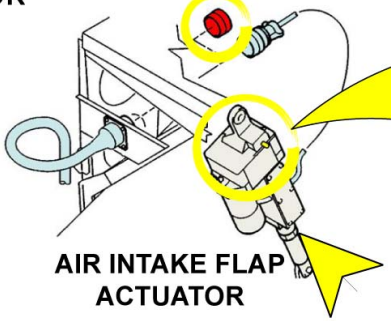

AIR INTAKE FLAP ACTUATOR

MEL/DEACTIVATION

G7508471 - G3NT1T0 - FM49B1000000001

APU LINE MAINTENANCE BRIEFING (2)

MAINTENANCE TIPS

BLEEDING OF THE APU FUEL LINE CONTROL AND INDICATING

The APU fuel supply line has a drain and vent valve which lets the line be bled of air after maintenance. The VENT & DRAIN valve is located in the APU compartment in the fuel supply line towards the fuel control.
A switch labeled FUEL VENT/PUSH is installed on the APU compartment forward the firewall to let maintenance staff supply positive fuel pressure to the APU from the APU compartment. This switch opens the APU LP valve, the isolation valve and starts the APU fuel pump without the APU Master Switch ON.
A drain valve adapter tool with a hose is connected to the drain valve.
Procedure:
- for safety, install the rig pin in the mechanical input of the Trimmable Horizontal Stabilizer (THS) actuator to prevent movement,
- transfer fuel to the Trim Tank to bleed main FWD/AFT transfer supply line,
- open APU access doors,
- install adaptor tool,
- push and hold the FUEL VENT P/BSW,
- at the APU fuel vent and drain valve, a continuous flow of fuel indicates that the APU fuel pump is operating and the line is bled of air,
- release the FUEL VENT P/BSW - the flow of fuel stops when the APU fuel pump stops running,
- disconnect the adapter tool.

G7508471 - G3NT1T0 - FM49B1000000001

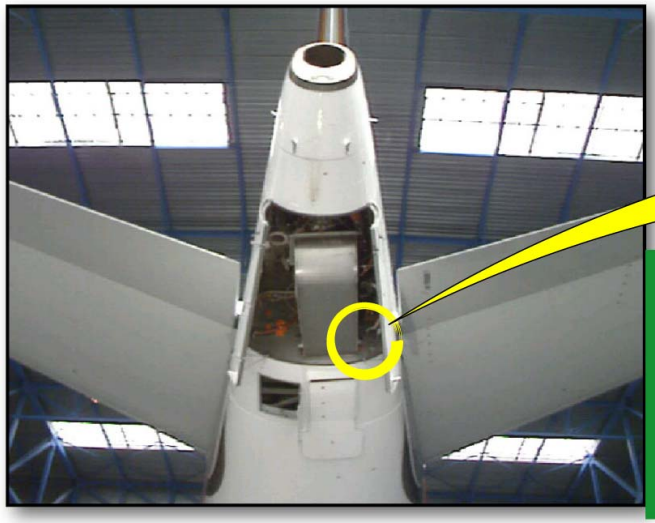

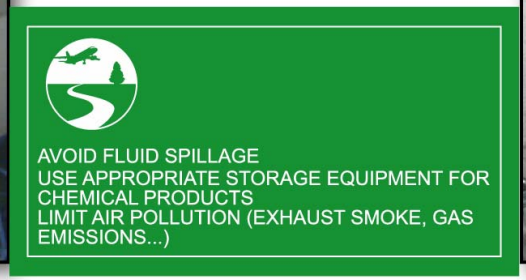

ADAPTOR TOOL

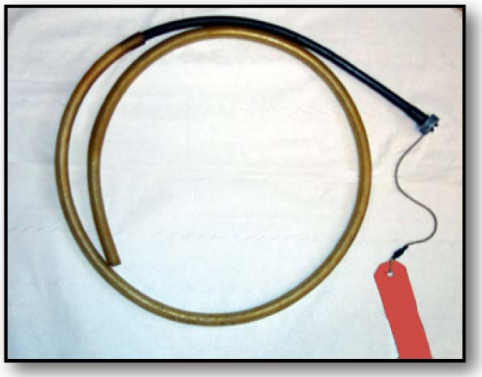

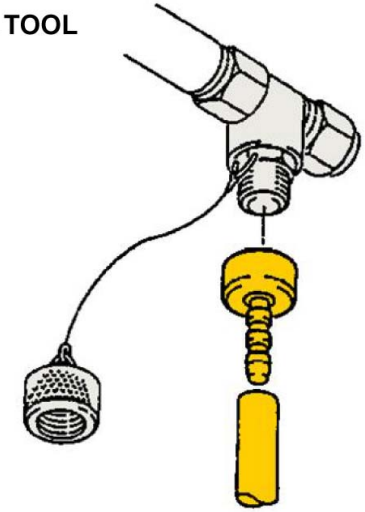

APU FUEL SUPPLY

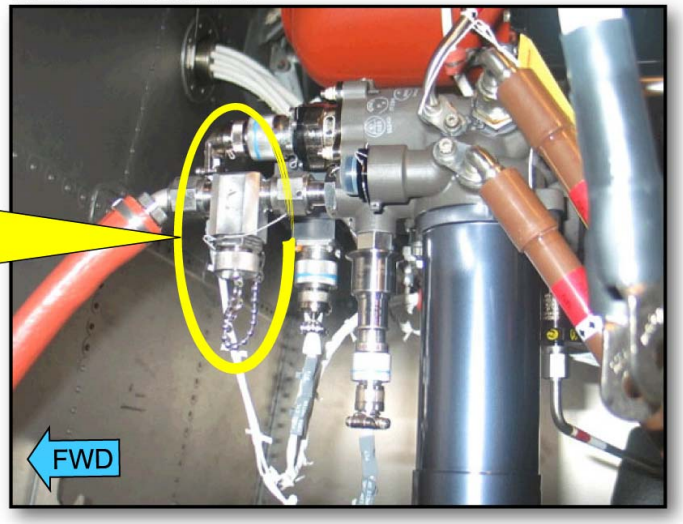

MAINTENANCE TIPS - BLEEDING OF THE APU FUEL LINE CONTROL AND INDICATING

APU LINE MAINTENANCE BRIEFING (2)

MAINTENANCE TIPS (continued)

5000VE CIRCUIT BREAKER PANEL

The APU maintenance procedures in the AMM reference circuit breakers on panel 5000VE (APU CTL, APU MAIN SUPPLY, etc.). The 5000VE panel is located in the APU BOX below the APU battery in the bulk cargo compartment behind the sidewall panel.

G7508471 - G3NT1T0 - FM49B1000000001

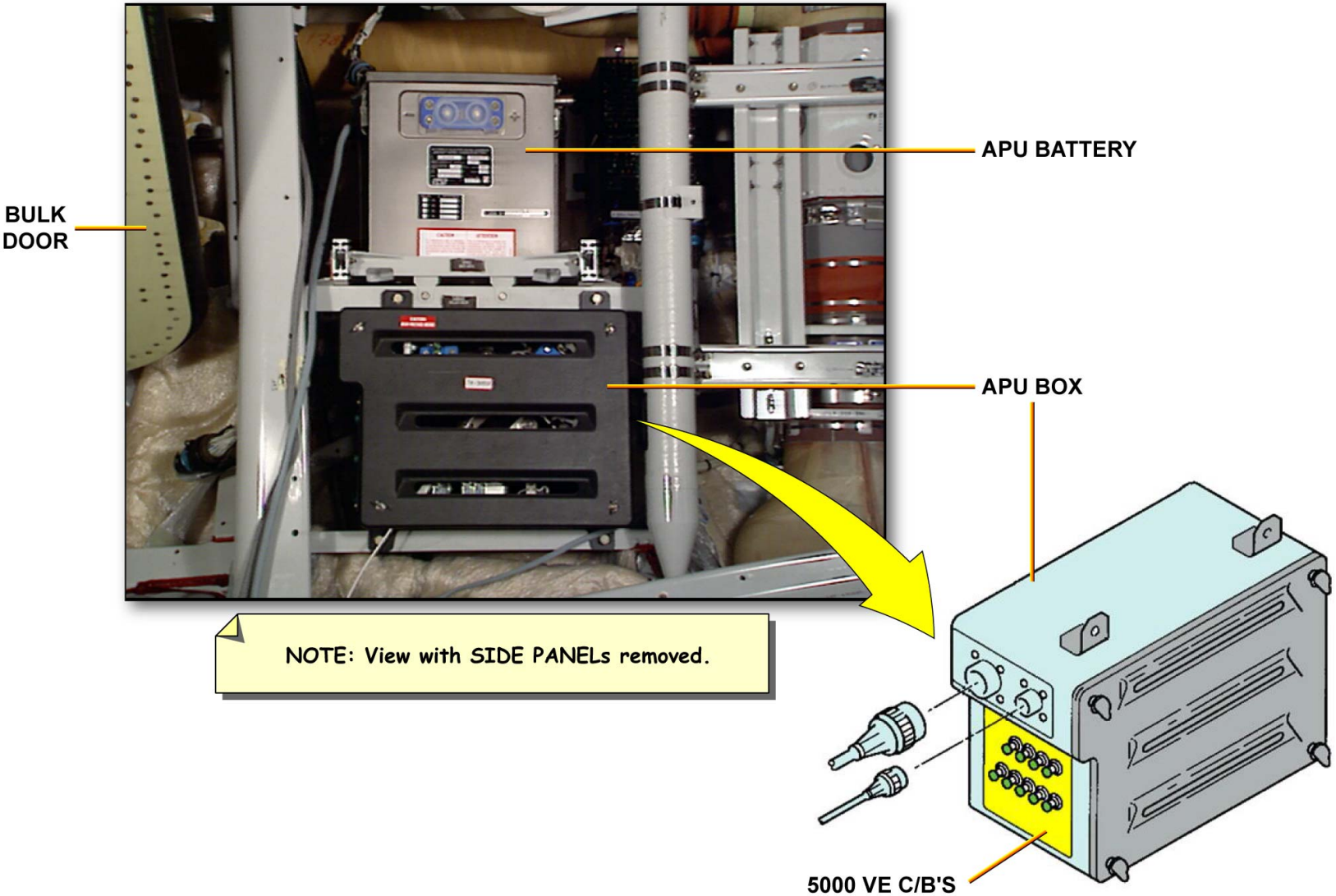

MAINTENANCE TIPS - 5000VE CIRCUIT BREAKER PANEL

G7508471 - G3NT1T0 - FM49B1000000001

APU LINE MAINTENANCE BRIEFING (2)

ENVIRONMENTAL PRECAUTIONS

Do not discharge products such as oil, fuel, solvent, lubricant either in trash bins, soil or into the water network (drains, gutters, rain water, waste water, etc...).
Sort waste fluids and use specific waste disposal containers.
Each product must be stored in an appropriate and specific cabinet or room such as a fire-resistant and sealed cupboard.
Avoid use of the APU if APU BLEED air is not necessary. Turn-off unused ground service equipment (GPU, Air conditioning cart, etc...) if no work is being done or nobody is present on the aircraft.

G7508471 - G3NT1T0 - FM49B1000000001

STORE PRODUCTS IN APPROPRIATE CONTAINER/CUPBOARD/ROOM

SORT WASTE FLUIDS IN CONTAINERS

AVOID FLUID SPILLAGE
USE APPROPRIATE STORAGE EQUIPMENT FOR CHEMICAL PRODUCTS
LIMIT AIR POLLUTION (EXHAUST SMOKE, GAS EMISSIONS...)

FLUID SPILL CLEANUP KIT

USE SPECIFIC WASTE DISPOSAL CONTAINERS

ENVIRONMENTAL PRECAUTIONS

APU GENERAL D/O (3)

GENERAL

The Auxiliary Power Unit (APU) power plant GTCP331-350 is divided into different sub-systems, which are:
- the engine system including three basic modules, the power section, the load compressor, the accessory drive gearbox,
- the APU mounts system,
- the air intake system,
- the draining system,
- the exhaust system.

G7508471 - G3NT1T0 - FM49D1000000003

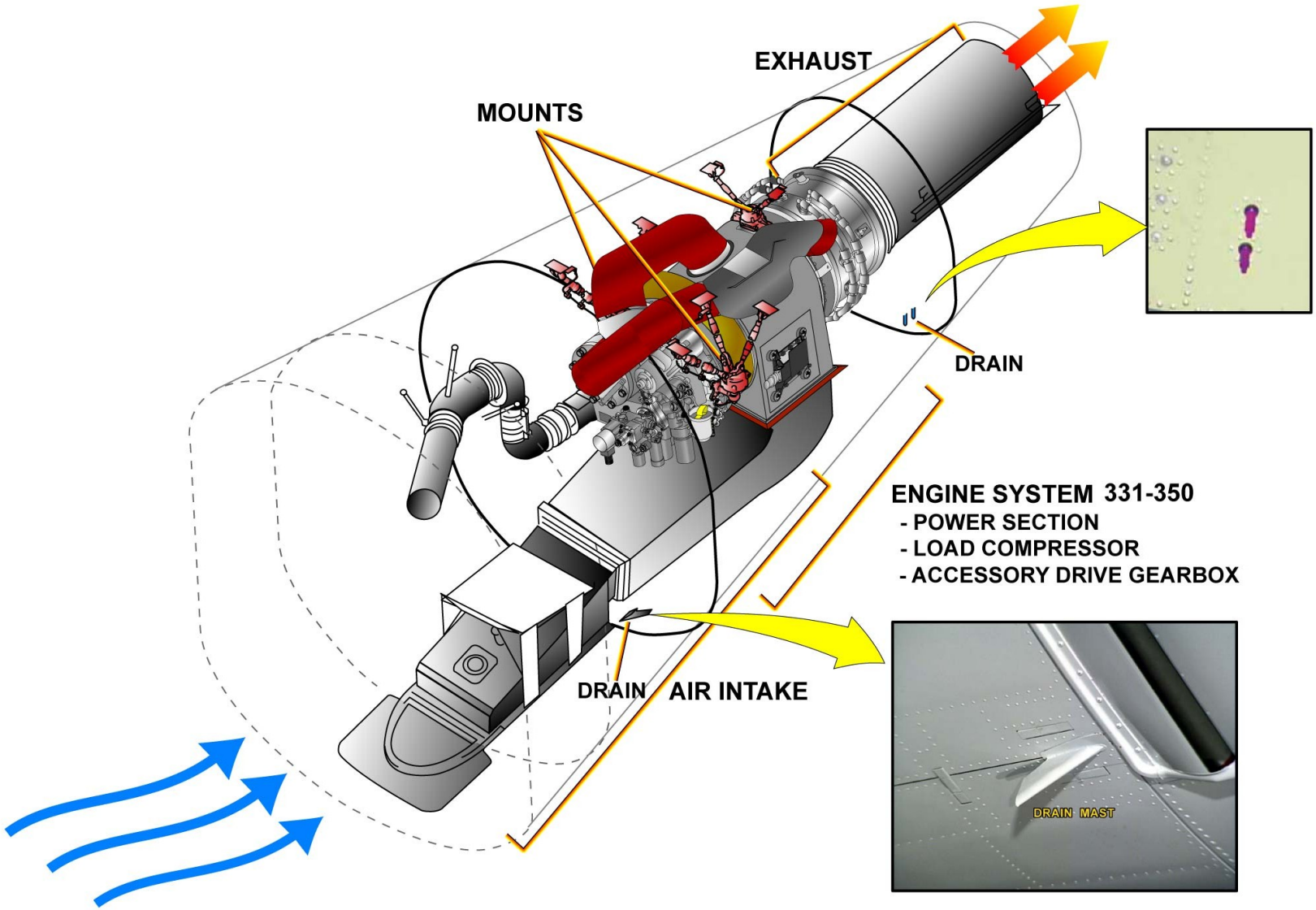
EXHAUST
MOUNTS
DRAIN
ENGINE SYSTEM 331-350
- POWER SECTION
- LOAD COMPRESSOR
- ACCESSORY DRIVE GEARBOX
DRAIN
AIR INTAKE
DRAIN MAST

GENERAL

APU GENERAL D/O (3)

ENGINE POWER SECTION

The power section of the GTCP331-350 system supplies the shaft power to drive:
- the load compressor,
- the accessory drive gearbox and the electrical generator. It is built up by the static structure and the rotating group. The static structure comprises the engine compressor case and the combustion chamber. The rotating group, including the centrifugal compressor and turbine, is a single shaft assembly supported with a ball bearing located at the FWD end and a roller bearing located at the aft end. Both bearings are designed with a lubricated outer race to damp vibrations. Their 100% operation speed is 41730 rpm.

ENGINE COMPRESSOR

The engine compressor is a two-stage centrifugal compressor. Each compressor stage has an impeller and a diffuser. The role of the engine centrifugal compressor is to increase and to guide the air pressure through deswirl vanes into the combustion chamber.

COMBUSTION CHAMBER

The combustion chamber is of a reverse-flow annular design and surrounds the turbine hub containment. While the compressed air is in the combustion chamber, fuel is atomized and mixed into the air. During the combustion, the expanded gas stream is directed to the turbine where it changes its energy into rotational movement.

TURBINE

The turbine of the GTCP331-350 power section is of the three-stage axial design. The turbine rotors are the rear part of the main shaft. Their 100% operation speed is 41730 rpm.

LOAD COMPRESSOR

The load compressor module supplies compressed air to the A/C pneumatic system. It is installed between the power section and the accessory drive gearbox. The load compressor components are:
- the Inlet Guide Vanes (IGV) assembly,
- the load compressor impeller,
- the load compressor diffuser,
- the scroll.

A FWD roller bearing and an aft ball bearing support the rotating components of the load compressor. Both bearings are designed with a lubricated outer race to damp vibrations.

INLET GUIDE VANES ASSEMBLY

The variable IGV assembly supplies the correct amount of air to the APU load-compressor by modulating the vane position angles. It is composed of IGVs on a cylindrical rack mechanically connected to a fuel-operated actuator by an adjustable linkage rod.

LOAD COMPRESSOR IMPELLER

The load compressor impeller is a single stage impeller.

LOAD COMPRESSOR DIFFUSER

Downstream of the load compressor impeller is the radial diffuser. Multiple openings in the diffuser throat are used to collect the static pressure.

SCROLL

The scroll collects the bleed air at the diffuser outlet and supplies it to the bleed air duct.

G7508471 - G3NT1T0 - FM49D100000003

ACCESSORY DRIVE GEARBOX

The accessory drive gearbox is the FWD APU module. It is connected directly to the load compressor module, which transmits the shaft power from the power section.
The gearbox transmits the shaft power to the APU accessories and to the APU electrical generator, which are installed on the gearbox pads. It is also the oil reservoir for the APU oil system. The APU driven accessories are:
- the APU generator,
- the lubrication module and the Fuel Control Unit (FCU).

G7508471 - G3NT1T0 - FM49D1000000003

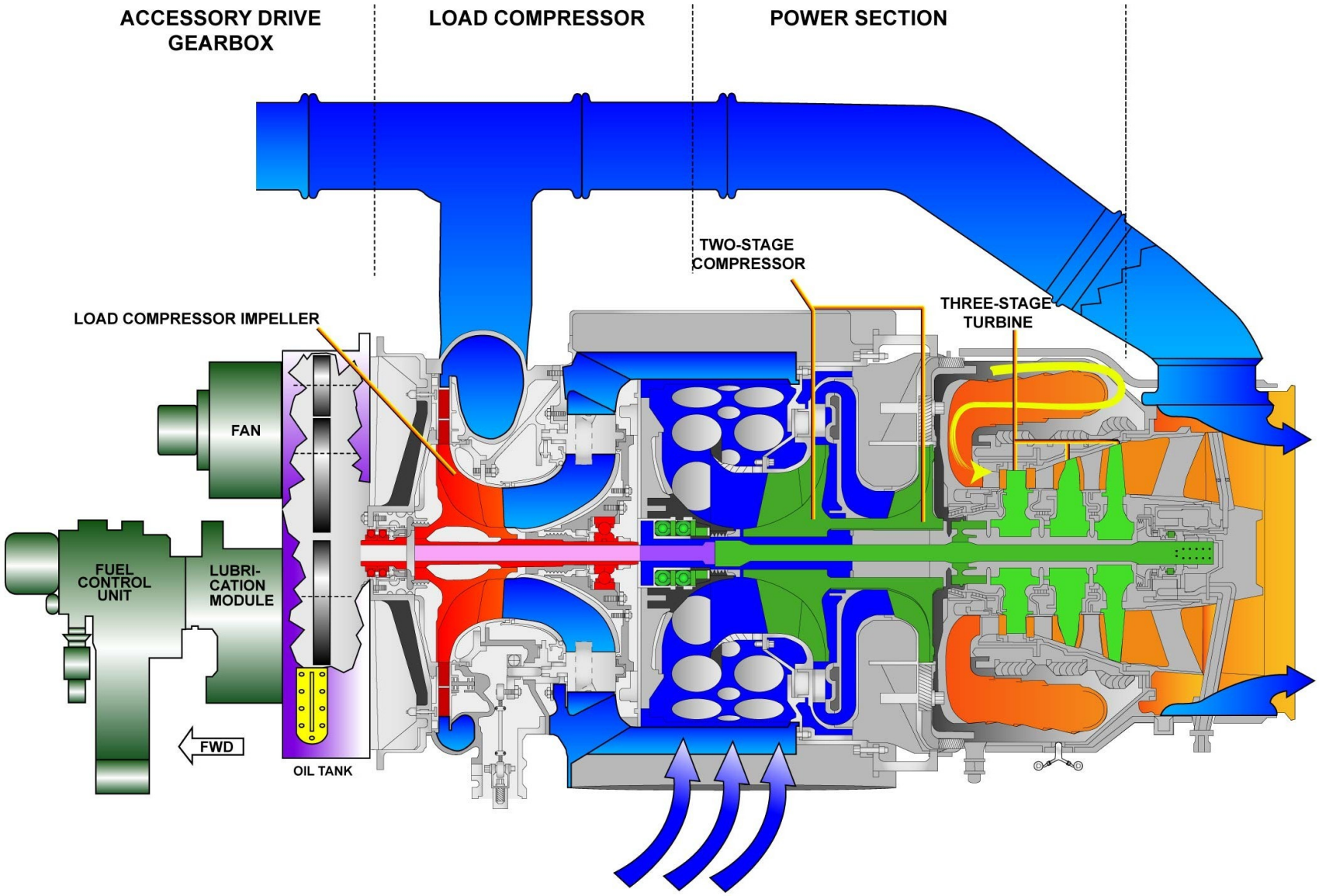

ENGINE POWER SECTION ... ACCESSORY DRIVE GEARBOX

G7508471 - G3NT1T0 - FM49D100000003

This Page Intentionally Left Blank

G7508471 - G3NT1T0 - FM49D1000000003

APU GENERAL D/O (3)

APU MOUNTS SYSTEM

The APU is installed on a three-point vibration-insulated mounting system. This system is composed of:
- seven structure brackets,
- seven rod assemblies,
- three APU mount brackets,
- three vibration isolators,
- two bonding straps.

G7508471 - G3NT1T0 - FM49D1000000003

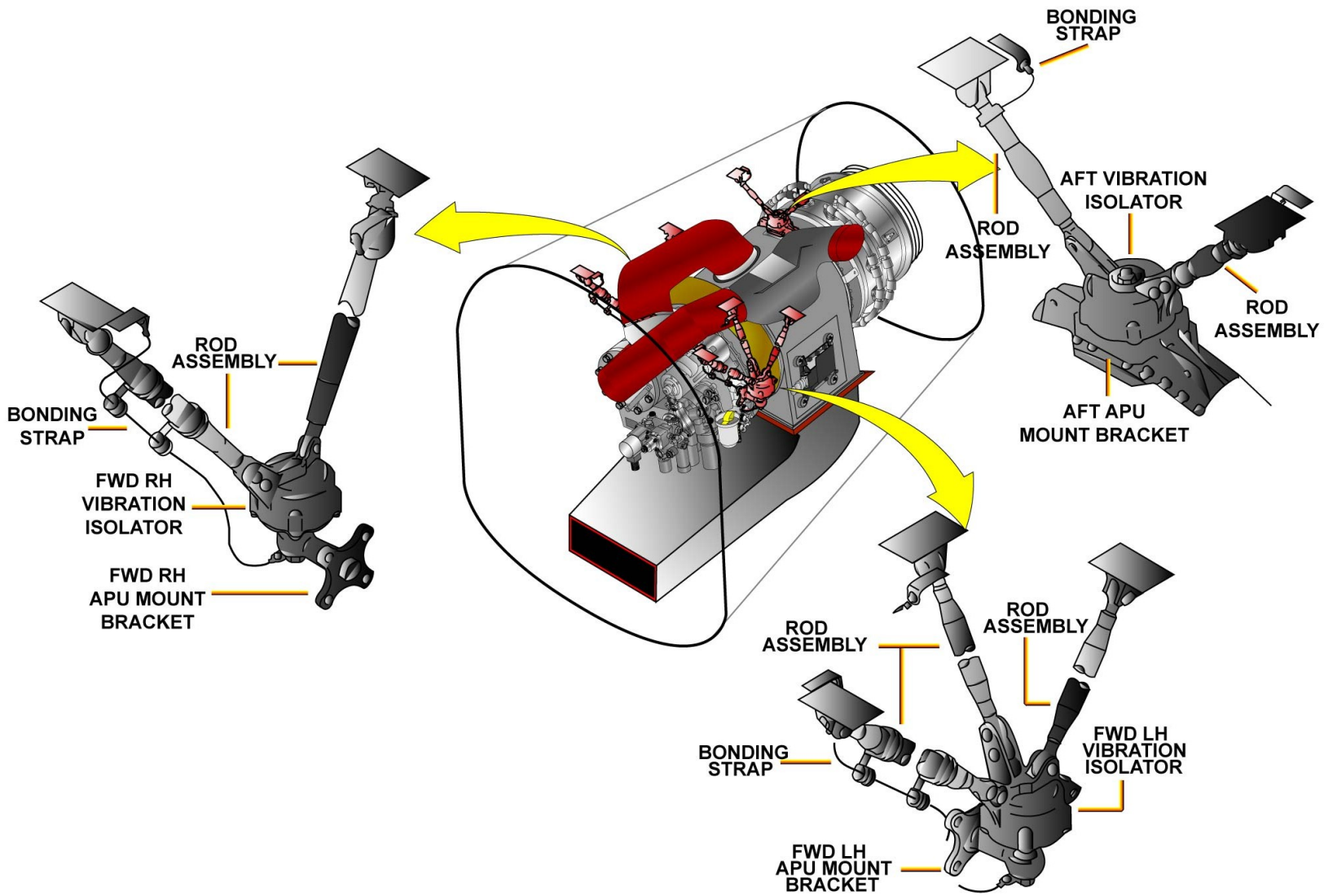

APU MOUNTS SYSTEM

G7508471 - G3NT1T0 - FM49D1000000003

APU GENERAL D/O (3)

AIR INTAKE SYSTEM

The air intake system supplies ambient air to the plenum chamber of the APU. The main components of the air intake system are:
- the air intake diverter,
- the air intake assembly, with an air intake nose, an air intake flap and an air intake flap actuator,
- the air intake duct.

The Electronic Control Box (ECB) supplies the necessary electrical power for the operation of the air intake flap actuator. The two limit switches and the two position switches control the position of the air intake flap actuator. When the A/C is on the ground with no electrical power available or in case of flap actuator failure, the air intake flap can be operated manually by a manual override device.

G7508471 - G3NT1T0 - FM49D1000000003

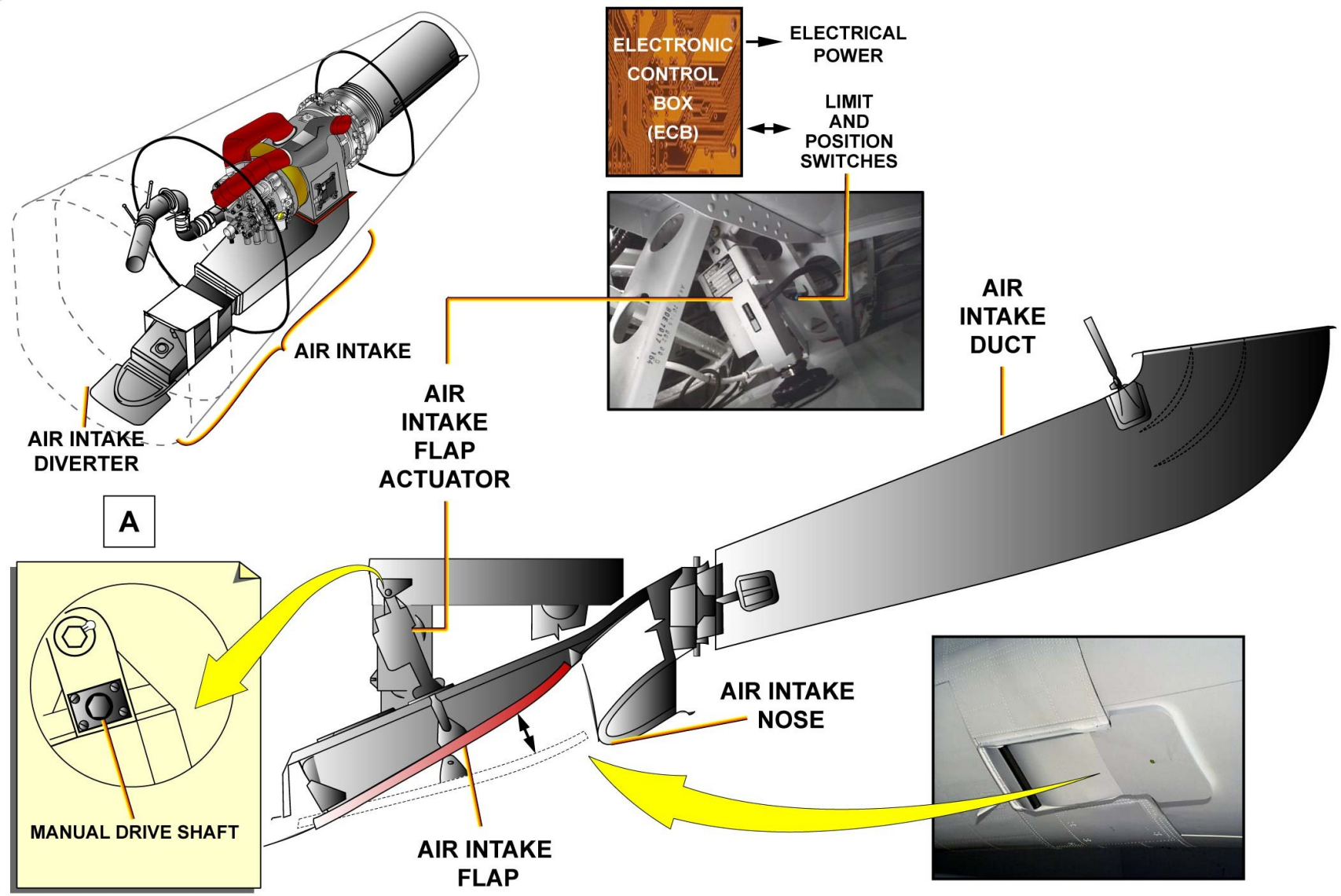

AIR INTAKE SYSTEM

G7508471 - G3NT1T0 - FM49D100000003

APU GENERAL D/O (3)

DRAIN SYSTEM

The power plant drain system is divided into two subsystems:
- the engine drain line system,
- the accessory drain line system.

The engine drain line system removes the subsequent excess fluids:
- the fuel, rainwater and/or condensed water from the exhaust muffler,
- the fuel, rainwater and/or condensed water from the APU exhaust cone,
- the fuel and condensed water from the combustion chamber and the combustion chamber drain valve.

The accessory drain line system removes subsequent excess fluids:
- fuel leakage and/or oil leakage from the FCU and the oil pump module, through the drain port check valve,
- fuel leakage from the surge control valve,
- fuel leakage from IGV actuator.

An APU plumbing connects the engine and accessory drain line systems to outboard drain tubes.

A FWD drain mast installed on the left APU compartment access door makes sure that the APU compartment fluid is drained overboard.

G7508471 - G3NT1T0 - FM49D1000000003

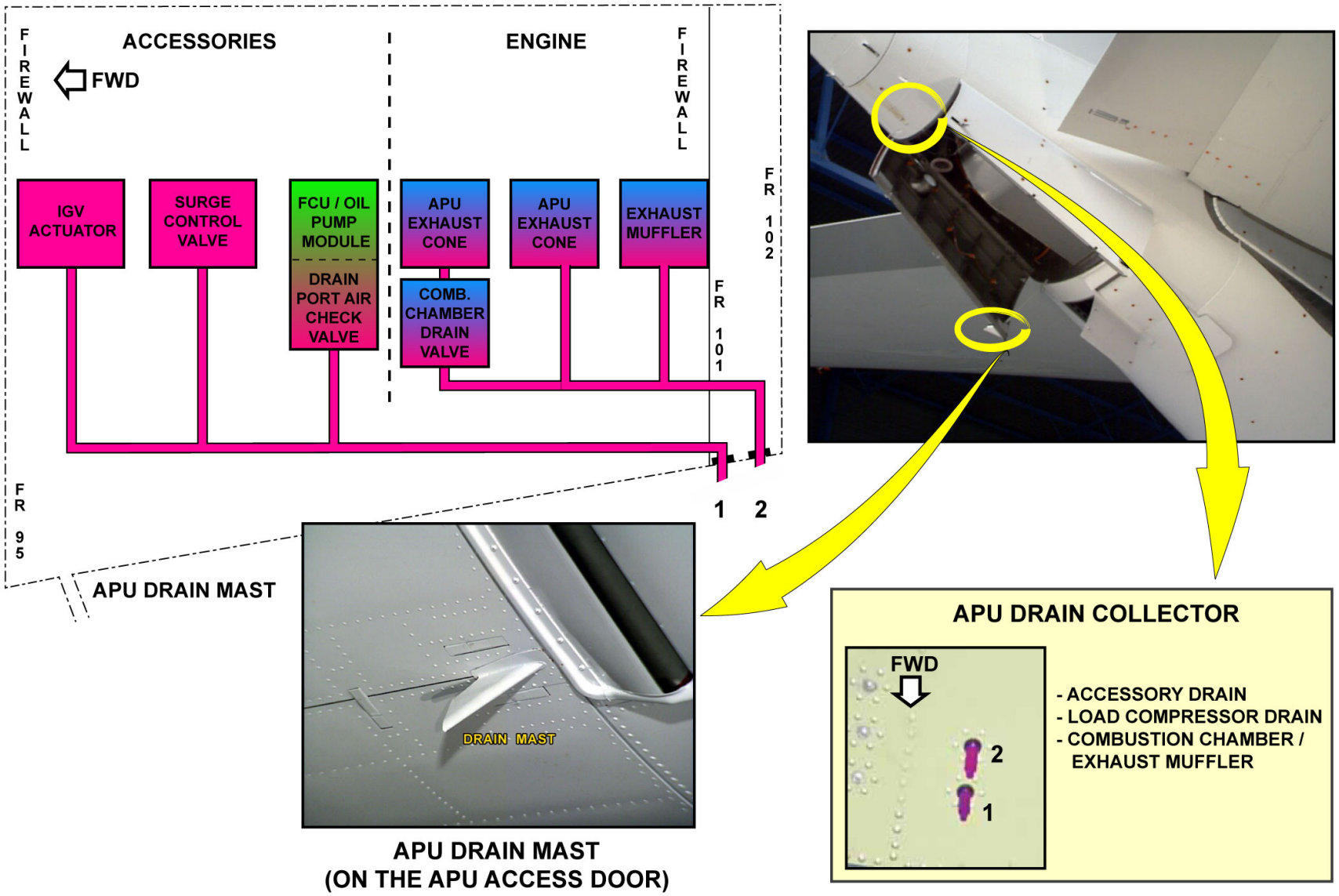

DRAIN SYSTEM

G7508471 - G3NT1T0 - FM49D100000003

APU GENERAL D/O (3)

EXHAUST

The APU exhaust system ducts the APU GTCP331-350 exhaust gases overboard; its secondary function is to decrease the exhaust noise level.
The exhaust system is made of two main components:
- the exhaust muffler assembly,
- the suspension.

The exhaust muffler assembly directs the exhaust gas flow to the ambient air, reducing the exhaust noise. It is composed of a flexible connection, which compensates expansion and contraction between the APU and the exhaust muffler caused by changes in temperature. The exhaust muffler suspension has two guide rails, which are part of the exhaust muffler compartment structure. They have a U shape. On the exhaust muffler there are four mount brackets. These fit into guide rails allowing thermal expansion. The exhaust muffler has a thermal insulation. It keeps the temperature at the external surface of the exhaust muffler to a limit of 200°C.

G7508471 - G3NT1T0 - FM49D1000000003

THE EXHAUST MUFFLER ASSEMBLY AND THE SUSPENSION

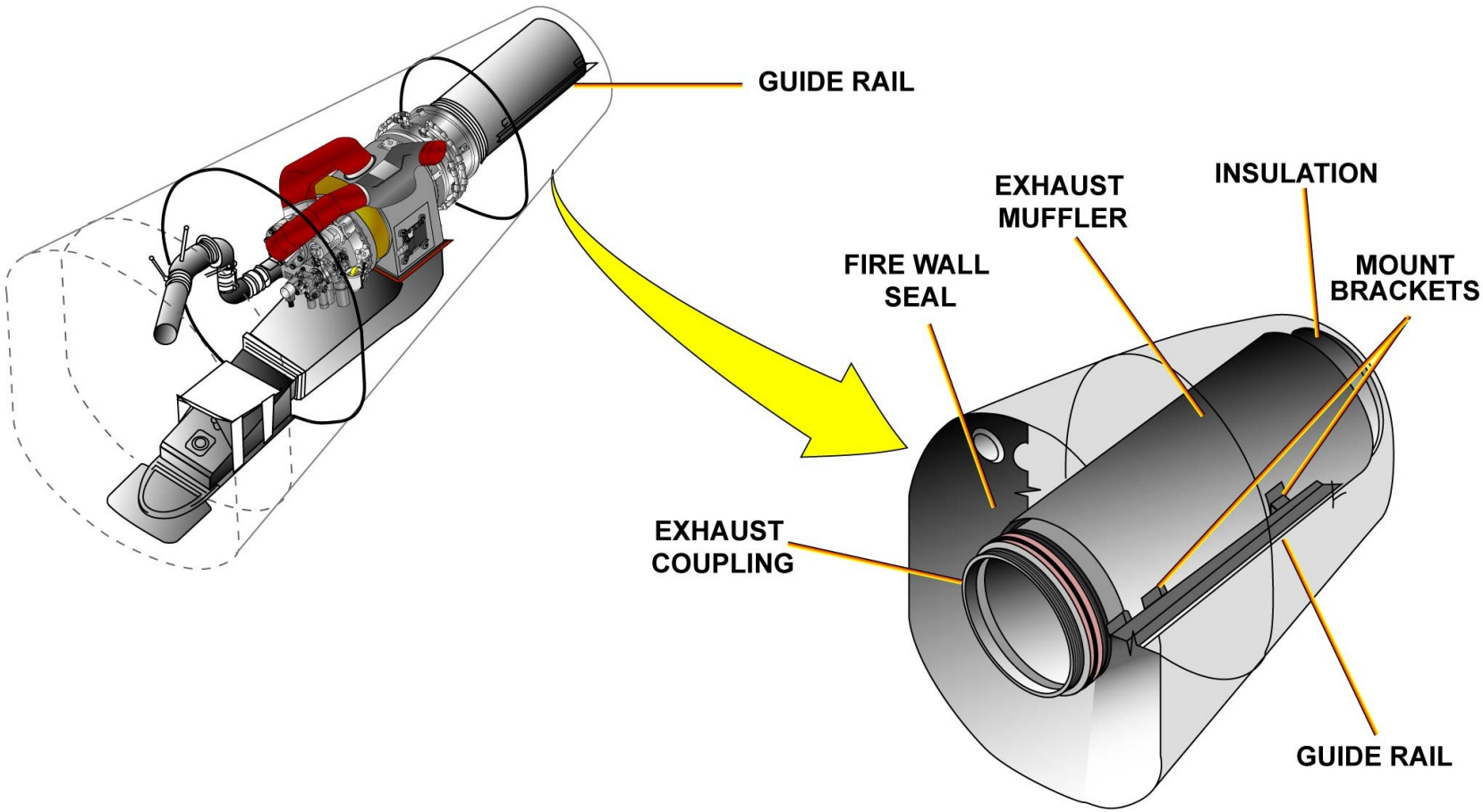

EXHAUST

G7508471 - G3NT1T0 - FM49D1000000003

APU FUEL D/O (3)

GENERAL

The Auxiliary Power Unit (APU) fuel system supplies metered fuel to sustain combustion. It is also used for Inlet Guide Vane (IGV) and surge control valve actuators operation.
APU fuel system indications are displayed on the EWD and the SD.

G7508471 - G3NT1T0 - FM49D300000003

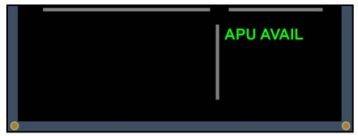

EWD

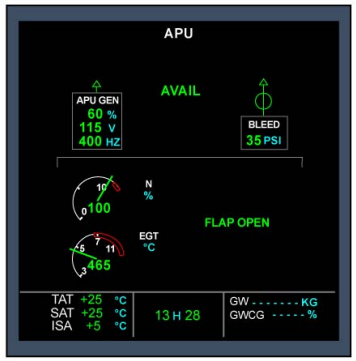

SD

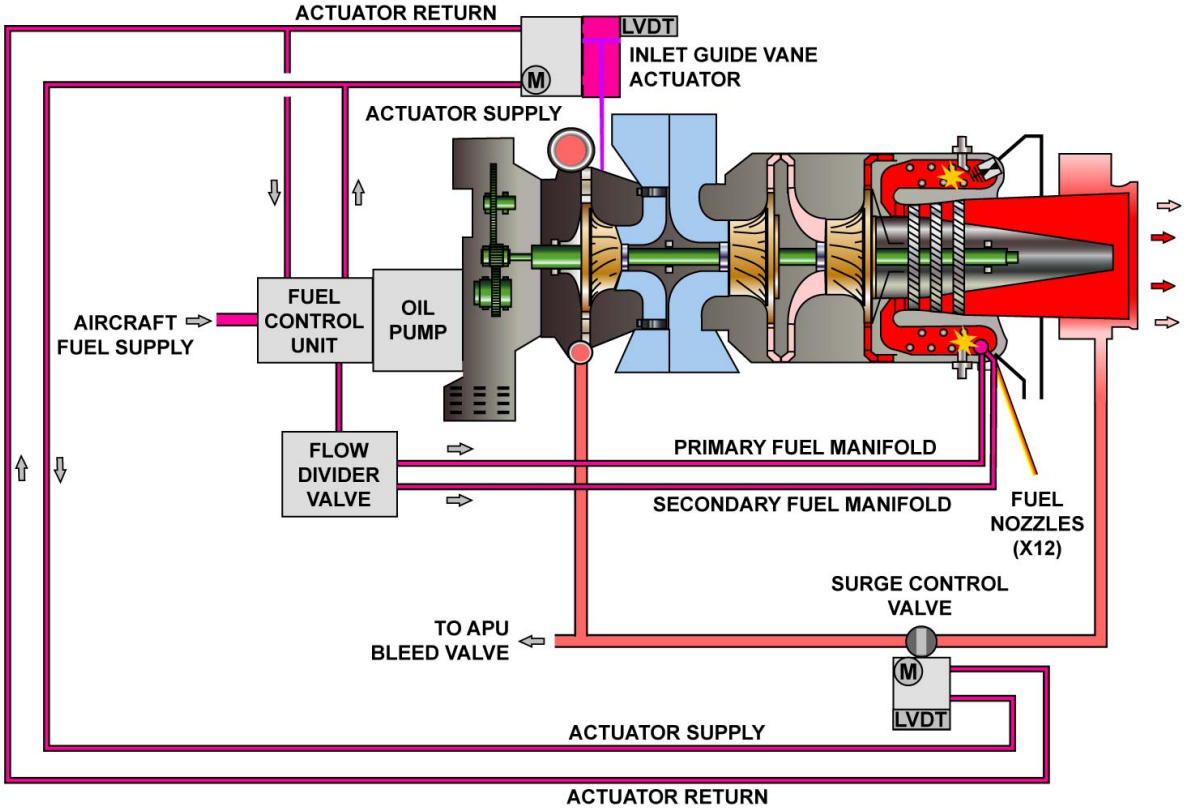

GENERAL

APU FUEL D/O (3)

FUEL CONTROL UNIT

The Fuel Control Unit (FCU) supplies the fuel quantity which is necessary for the APU operation. It also supplies the necessary fuel to operate the IGV and the SURGE CONTROL VALVE actuators.
The FCU is composed of:
- an inlet filter,
- a high pressure pump,
- a high pressure filter,
- a torque-motor metering valve,
- a shut-off valve.

FUEL SCHEDULE

The Fuel Metering Valve (FMV) is a torque-motor metering valve. It is controlled by the Electronic Control Box (ECB) which schedules the fuel flow for start sequence, on-speed operation and shut-down sequence.

MUSCLE PRESSURE

Fuel muscle pressure is used to operate the surge control valve actuator and the load compressor IGV actuator.

FUEL SHUT-OFF

The ECB controls the fuel solenoid valve for positive fuel shut-off. The valve is controlled open during the start sequence, and closed during the stop sequence.

FLOW DIVIDER

The flow divider divides fuel into primary and secondary flows. During the start sequence, only the primary flow is supplied.
At the APU shutdown, compressor discharge stage 2 air blows out the residual fuel from the two manifolds during APU shutdown through an ecologic drain solenoid valve controlled by the ECB.

FUEL DISTRIBUTION

Fuel flows to the combustion chamber through 12 fuel nozzles. At the start sequence, only the primary flow is supplied, but at a preset fuel pressure, the secondary flow is supplied.

CONTROL AND MONITORING

The ECB controls the fuel system using the APU speed, EGT, and A/C demand signals during on-speed operation. It uses the APU speed, Exhaust Gas Temperature (EGT), fuel temperature and fuel flow during starting. The APU boost pumps are monitored by the ECB through a pressure switch installed at the FCU inlet.
A visual filter-clogging indicator is used to monitor the fuel system contamination.

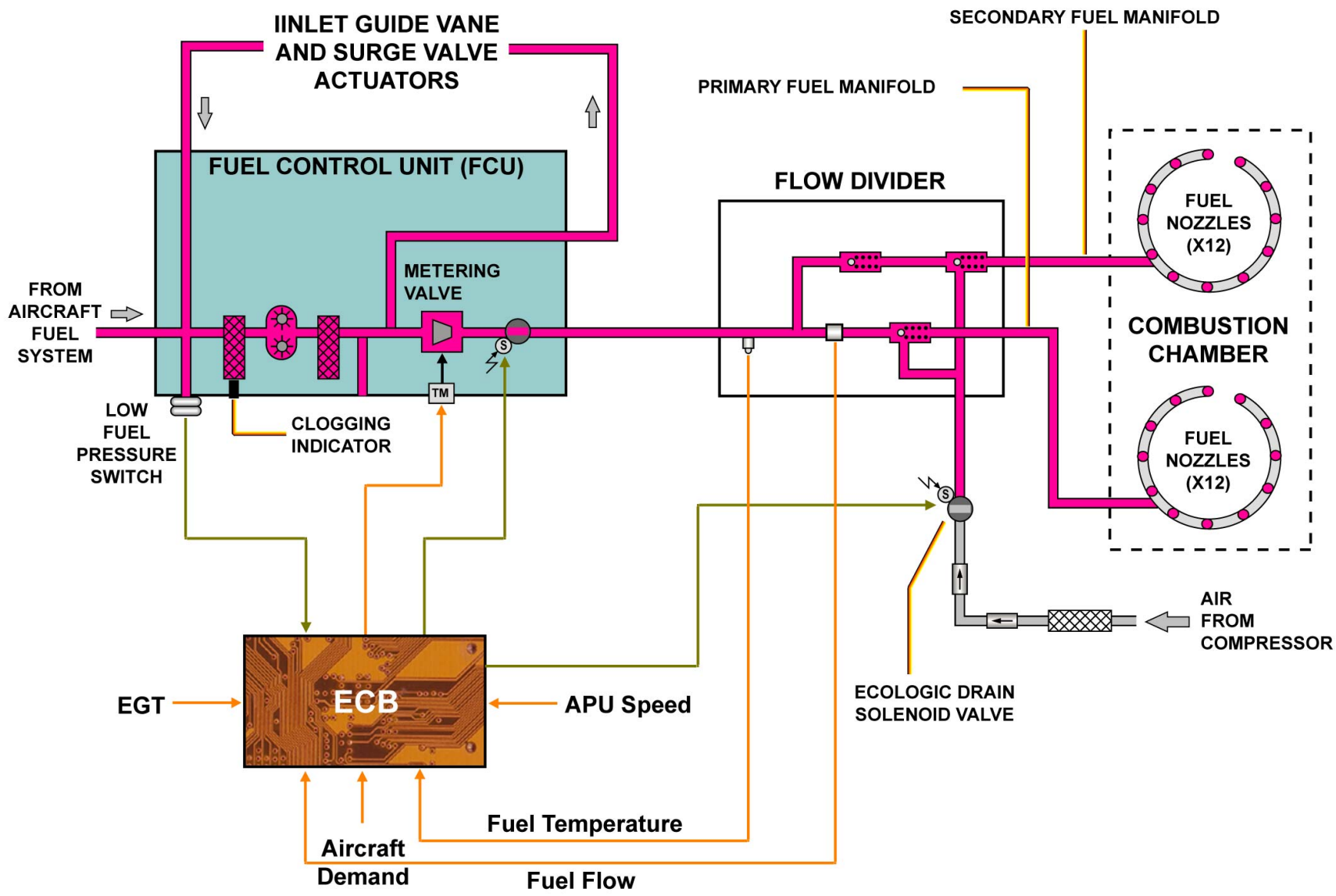

FUEL CONTROL UNIT ... CONTROL AND MONITORING

G7508471 - G3NT1T0 - FM49D300000003

APU AIR D/O (3)

GENERAL

The air system delivers compressed air from the Auxiliary Power Unit (APU) load compressor and cools the accessory. The two subsystems are:
- bleed and surge air,
- accessory cooling.

BLEED AND SURGE SUBSYSTEM DESCRIPTION

The APU load compressor supplies bleed air to the pneumatic system. Bleed air quantity is controlled by the load compressor Inlet Guide Vanes (IGVs) which are moved by a fuel-powered actuator. A bleed air shut-off valve, pneumatically operated, lets or stops the bleed air flow to the pneumatic system.
A surge control valve prevents a load compressor surge, by discharging the excess of air in the exhaust. It is a butterfly-type valve hydraulically operated by fuel coming from the Fuel Control Unit (FCU). The valve has a Linear Variable Differential Transducer (LVDT) for position feedback.

BLEED AND SURGE AIR OPERATION

APU bleed air is delivered when all the following conditions are met:
- APU is running above 95% speed,
- APU bleed switch is selected,
- No bleed leak detected by the Bleed Monitoring Computers (BMCs),
- APU inlet pressure (P2) altitude is below 25,000 feet.

By pressing the APU BLEED P/B, if no leak is detected, the BMCs send a signal to the Electronic Control Box (ECB) which energizes the APU bleed valve solenoid. Using upstream bleed air pressure, the APU bleed valve fully opens.
Then, the ECB adjusts the IGVs actuator torque motor current according to the following parameters:
- the A/C bleed demand sent by the Zone Controller (ZC),
- the Load Compressor Inlet Temperature (LCIT),
- the Load Compressor Outlet Temperature (LCOT),
- P2.

The IGVs actuator moves under fuel pressure to the requested position which is fed back to the ECB using the actuator LVDT. Consequently the IGVs are set to a position satisfying the airflow demand.
To prevent an APU load compressor surge in the event of a higher flow delivered than actually used by the A/C systems, the ECB controls the torque motor of the surge control valve. The surge control valve torque motor current is calculated by the ECB from the comparison of the actual flow delivered and the selected flow from the IGVs setting.
A total pressure (PT) transducer, and a differential pressure transducer (P) send data to the ECB. The actual flow is given by the ratio P/PT.
When the actual flow is greater than the selected flow, indicating a surge, the ECB adjusts the surge control valve torque motor current. The surge control valve actuator moves under fuel pressure and the valve opens, releasing the excess of air to the exhaust.
Feedback of the surge control valve is given to the ECB by an LVDT.
Once the surge condition disappears, the surge control valve goes back to the closed position.

ACCESSORY COOLING

A gearbox-driven fan draws air from the inlet plenum and forces it to pass through the oil cooler and from there overboard.
The fan also supplies air to the APU compartment through a pneumatic cooling valve which is fully closed in altitude. An uncontrolled cooling orifice is used permanently for the cooling when the APU is running.

G7508471 - G3NT1T0 - FM49D400000003

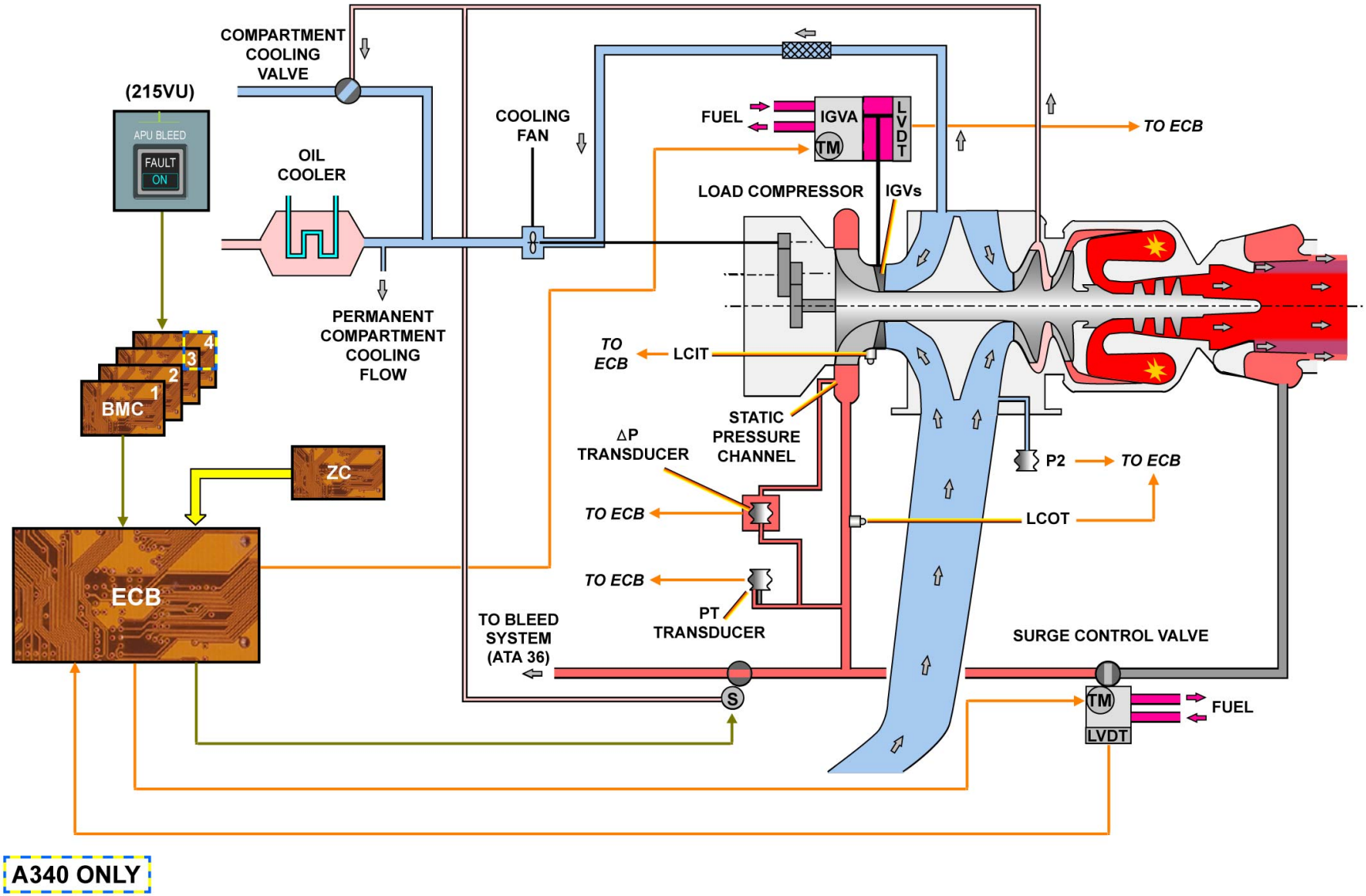

A340 ONLY

GENERAL ... ACCESSORY COOLING

G7508471 - G3NT1T0 - FM49D400000003

APU OIL D/O (3)

LUBE MODULE DESCRIPTION

The lubrication module, also called lube module, is attached to the front of the gearbox. It provides continuous pressurized oil supply to APU components, and scavenges oil from lubricated components.
The lubrication module is a self-contained unit providing oil to:
- the generator,
- the gearbox,
- the main shaft bearings sump.

The lube module contains:
- a lube pump system and a scavenge pump system,
- a lube filter fitted with a differential pressure switch for clogging detection and a clogging visual indicator,
- a lube filter bypass valve,
- a generator scavenge filter also fitted with a differential pressure switch for clogging detection and a clogging visual indicator,
- a generator scavenge filter by-pass valve,
- an electrical chip detector,
- a solenoid de-oiling valve.

LUBE PUMP SYSTEM AND SCAVENGE PUMP SYSTEM

The lubrication section incorporates two gyrotor element scavenge pumps for clearing oil from the generator, and two single element gyrotor scavenge pumps for cl earing oil from the APU mid-frame and turbine bearing cavity.

G7508471 - G3NT1T0 - FM49D200000003

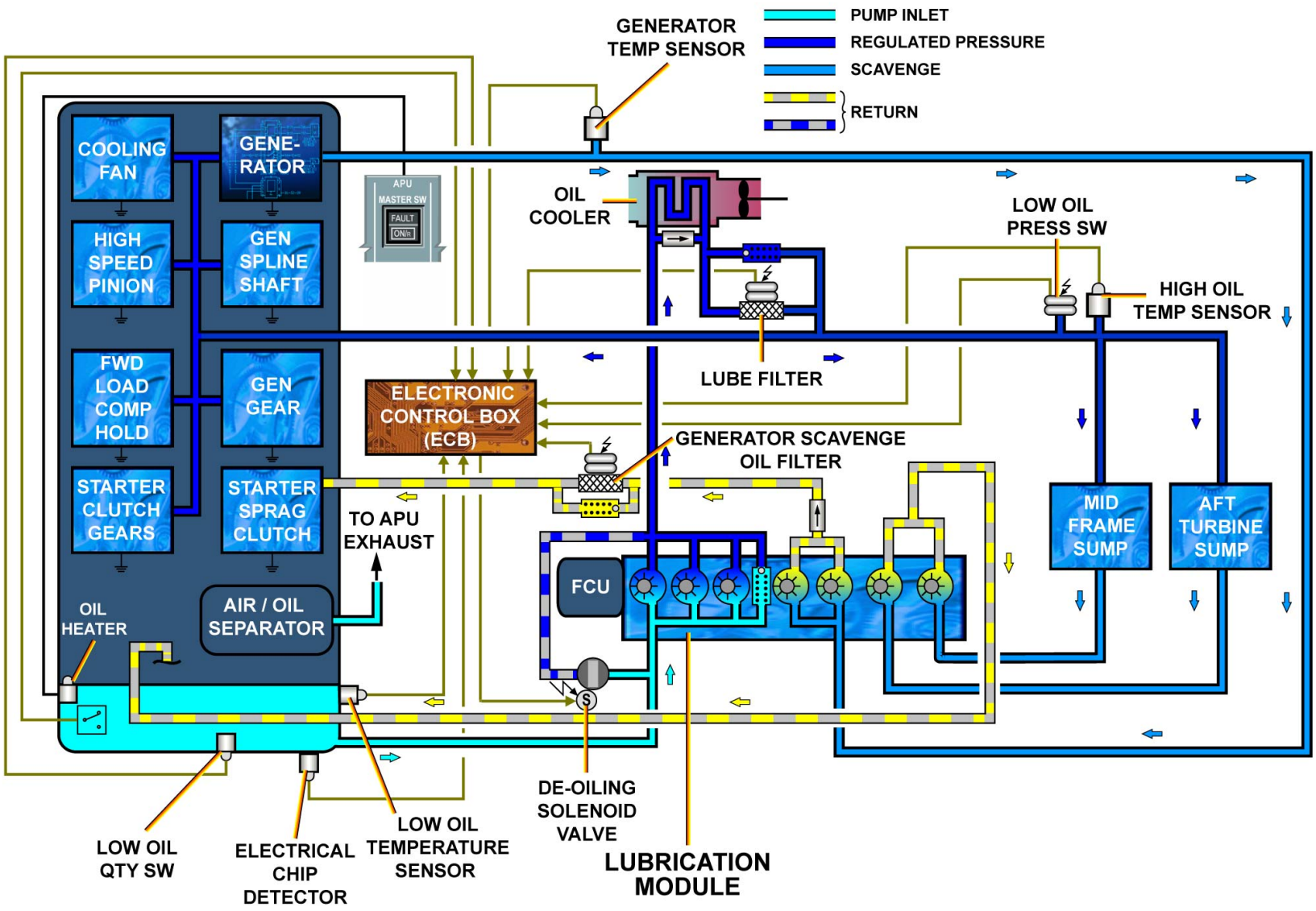

LUBE MODULE DESCRIPTION - LUBE PUMP SYSTEM AND SCAVENGE PUMP SYSTEM

G7508471 - G3NT1T0 - FM49D200000003

APU OIL D/O (3)

LUBE MODULE DESCRIPTION (continued)

LOW OIL PRESSURE (LOP) SWITCH AND HIGH OIL TEMPERATURE (HOT) SENSOR

A Low Oil Pressure (LOP) switch monitors the regulated oil pressure. When the LOP finds that the oil pressure is too low, it transmits a discrete signal to the ECB. A High Oil Temperature (HOT) sensor measures the temperature of the oil downstream of the oil cooler. The ECB receives the temperature signal and thus monitors the APU oil temperature.

G7508471 - G3NT1T0 - FM49D200000003

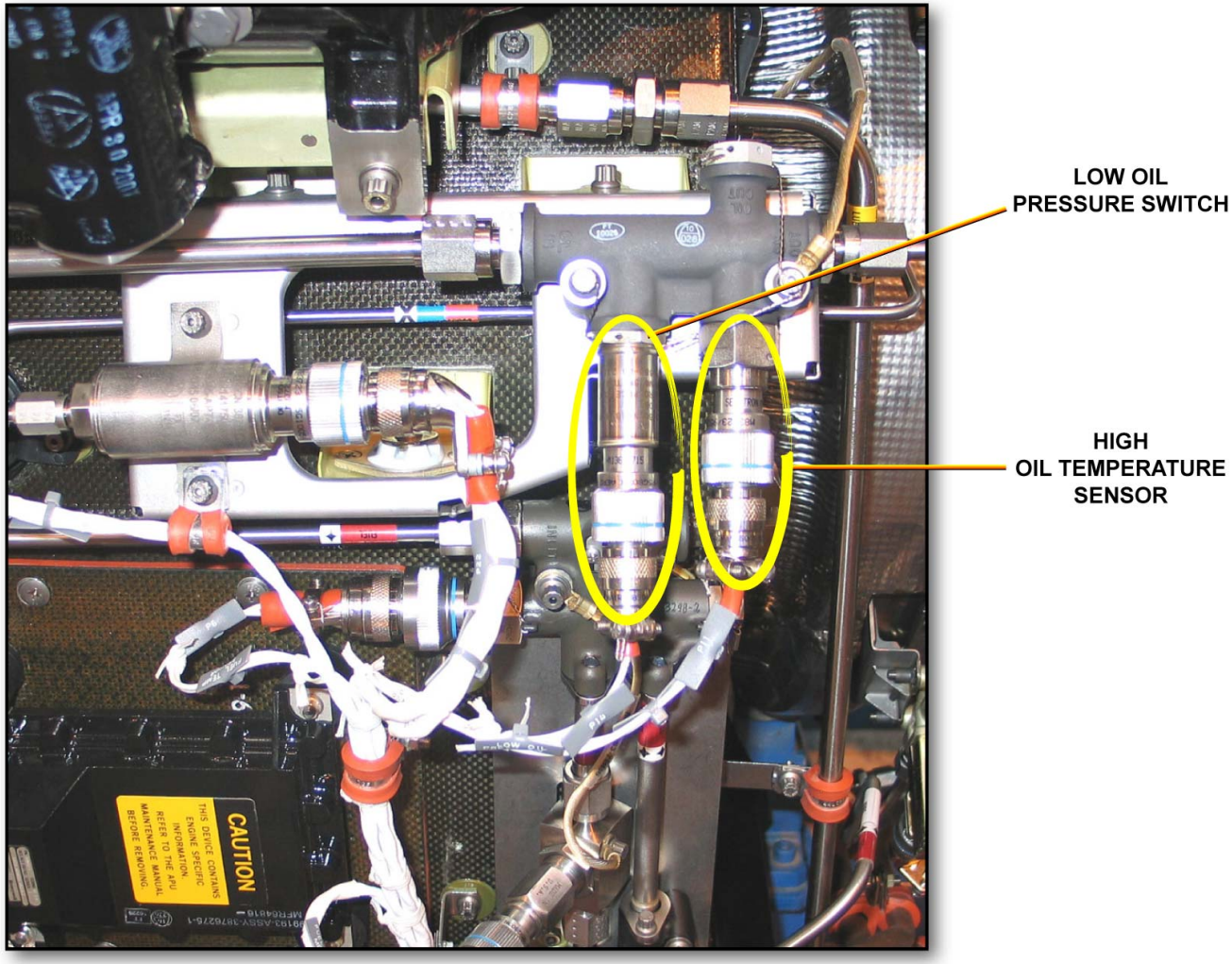

LUBE MODULE DESCRIPTION - LOW OIL PRESSURE (LOP) SWITCH AND HIGH OIL TEMPERATURE (HOT) SENSOR

G7508471 - G3NT1T0 - FM49D200000003

APU OIL D/O (3)

LUBE MODULE DESCRIPTION (continued)

LUBE AND SCAVENGE OIL FILTERS

The filters are contained in housings, which are threaded into the lubrication module housing. The same kind of filter is used in the lubrication and in the scavenge circuits. Both are replaceable and non-cleanable. Each filter housing is equipped with a visual clogging indicator and a differential pressure switch.

The differential pressure switches are LRUs that provide a remote, real-time indication to the ECB of impending bypass of corresponding filter. The actuation of either or both switches will cause an APU auto-shutdown, inhibited during flight.

Filter bypass valves are installed in the supply circuit and generator scavenge circuit of the lube module. These bypass valves allow continued APU operation with highly contaminated or blocked filter, when operating the APU in the auto-shutdown inhibition phase.

The visual indicator is designed to trigger at 25 +/-5 psid, the differential pressure switches at 35 +/-5 psid and the bypass valve to open at 65 +/-5 psid. Thus, the visual indication will be provided prior to the earliest possible switch actuation, and switch actuation prior to the opening of the bypass valve.

G7508471 - G3NT1T0 - FM49D200000003

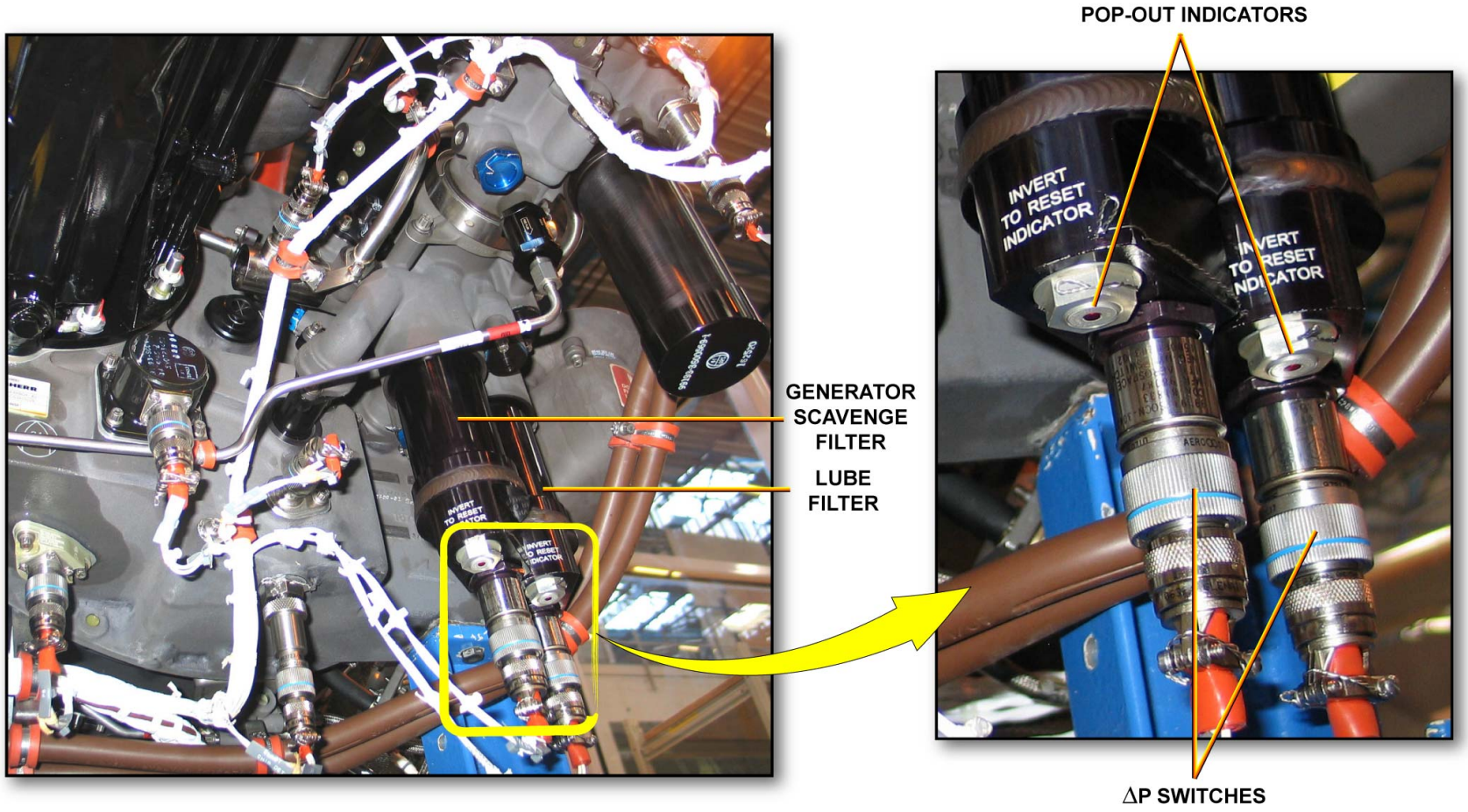

LUBE MODULE DESCRIPTION - LUBE AND SCAVENGE OIL FILTERS

G7508471 - G3NT1T0 - FM49D200000003

APU OIL D/O (3)

LUBE MODULE DESCRIPTION (continued)

SOLENOID DE-OILING VALVE

The bypass de-oil solenoid valve is an LRU located on the bottom left hand side of the lube module. It opens to allow air to enter into the inlet side of the pressure pump under specific start conditions (depending on oil temperature, fuel temperature and aircraft altitude) and also during APU shutdown.

G7508471 - G3NT1T0 - FM49D200000003

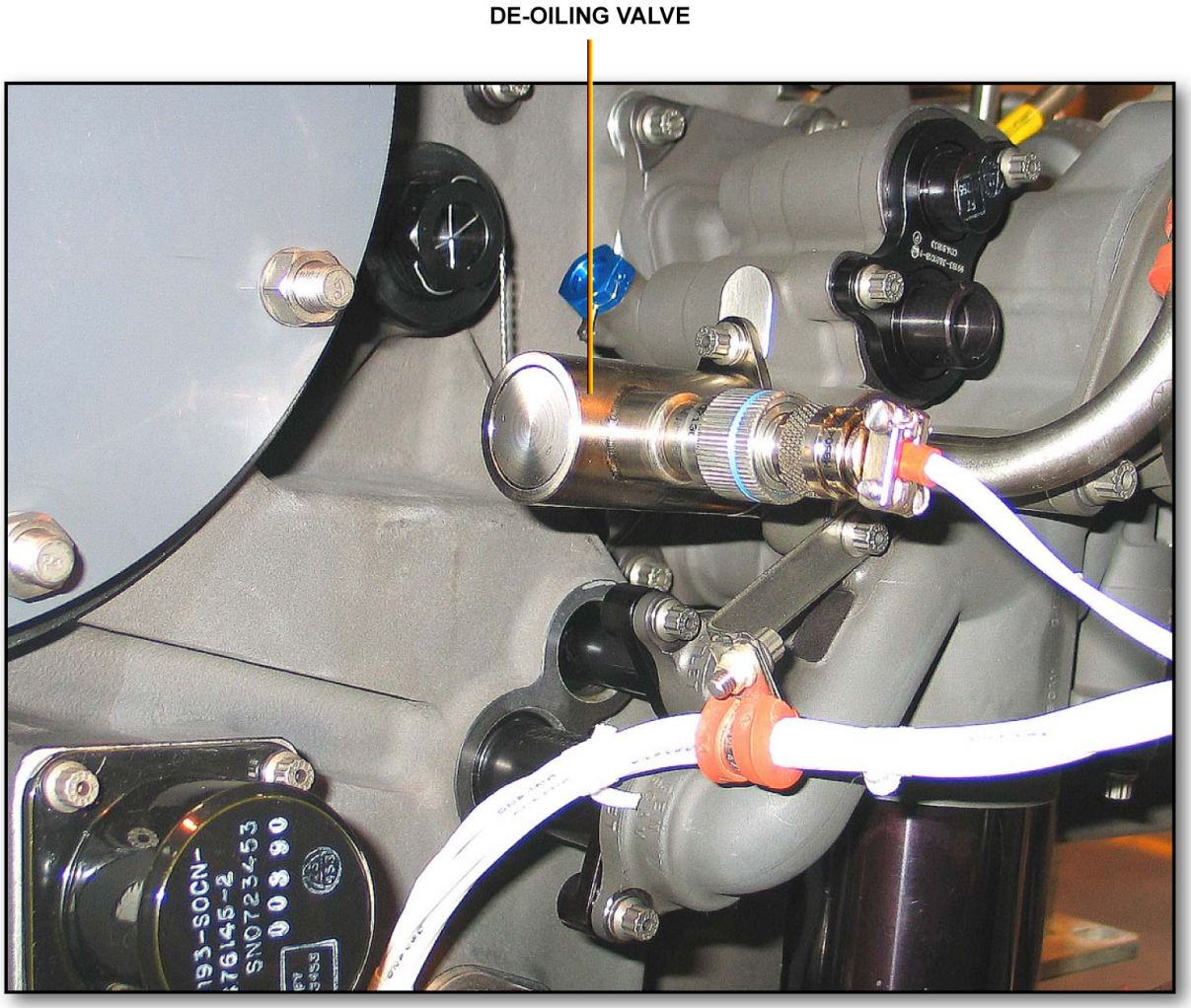

LUBE MODULE DESCRIPTION - SOLENOID DE-OILING VALVE

G7508471 - G3NT1T0 - FM49D200000003

APU OIL D/O (3)

GEARBOX DESCRIPTION

The lower part of the gearbox is used as oil reservoir. The total capacity of the oil reservoir is 8.5 liters. The gearbox is fitted with:
- a gravity fill port and a pressure fill port,
- an oil level sight glass,
- a low oil quantity switch,
- a low oil temperature sensor,
- an oil heater,
- an electrical chip detector,
- an air/oil separator.

Within the gearbox, the cooling fan pad and the starter motor pad are internally supplied with oil.

G7508471 - G3NT1T0 - FM49D200000003

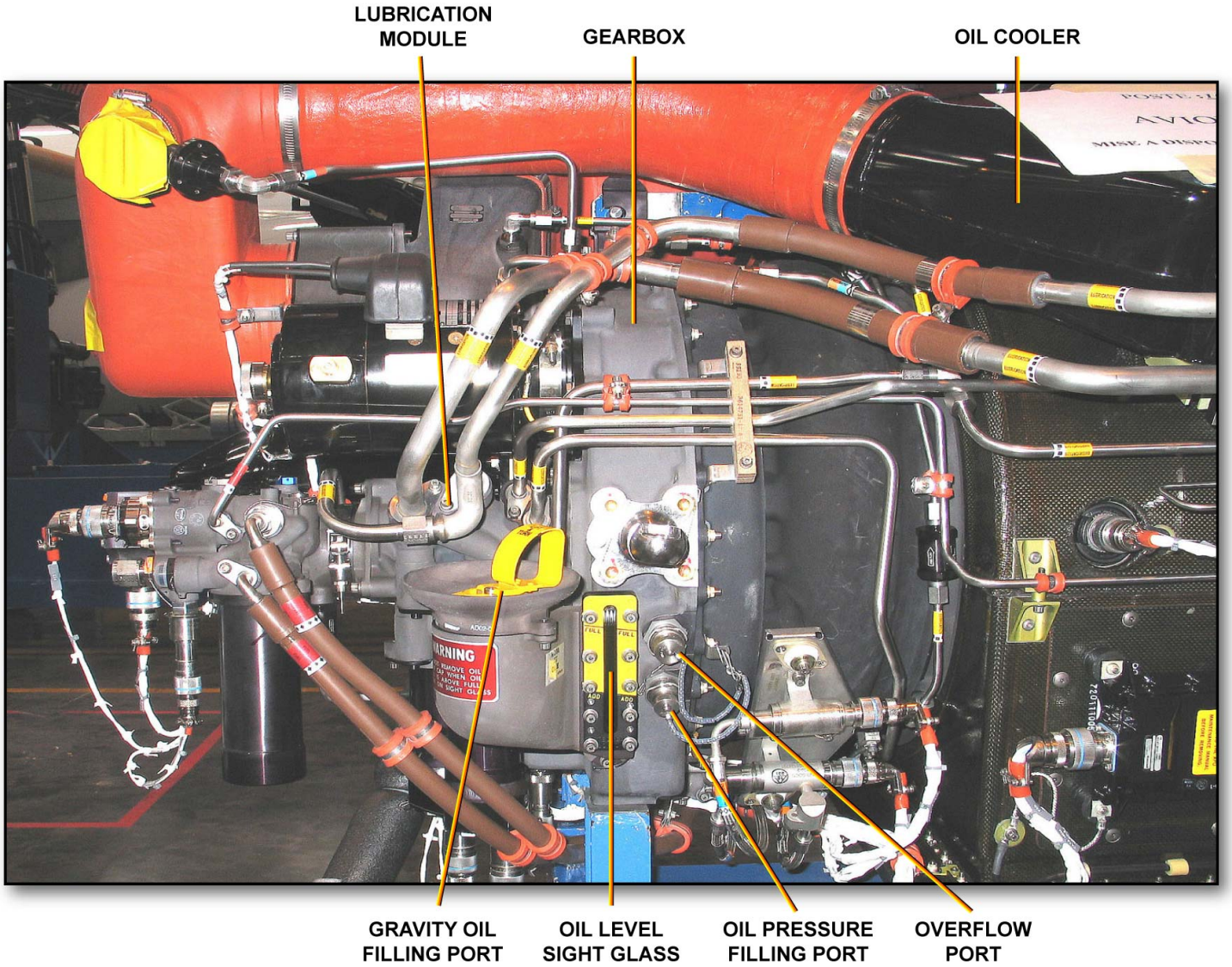

GEARBOX DESCRIPTION

G7508471 - G3NT1T0 - FM49D200000003

APU OIL D/O (3)

GEARBOX DESCRIPTION (continued)

GRAVITY FILLING PORT, PRESSURE FILLING PORT AND OIL OVERFLOW PORT

The gravity filling port is on the left-hand side lower part of the gearbox. It gives a method for the servicing of the Auxiliary Power Unit (APU) with oil and it is big enough to have a servicing from a 1-quart can. It has a positive locking device when closed. A pressure filling port and an oil overflow port are also installed for remote fill servicing.

OIL LEVEL SIGHT GLASS

A sight glass is installed on the gravity fill port for oil level indication. It has two sets of markings for the levels, one when the APU is running, and the other one when the APU is not running. For each of them, there is an "ADD" and a "FULL" mark. The "ADD" mark is equal to an oil quantity of 4.1 liters (low oil level); the "FULL" mark is equal to a level of 7.3 liters.

LOW OIL QUANTITY SWITCH

The low oil quantity switch is located next to the gravity fill oil cap on the gearbox. It uses dual reed switches for two separate oil level indications, which are activated by a magnet/float combination when the oil level changes.

LOW OIL TEMPERATURE SENSOR

The low oil temperature sensor is installed on the gearbox housing. It measures the temperature of the oil in the reservoir. The sensor transmits the temperature signal to the Electronic Control Box (ECB).

OIL HEATER

The oil heater is a Line Replaceable Unit (LRU) located on the lower left side of the gearbox. The APU oil heater has an oil temperature switch and a nickel-iron alloy coil. It uses an independent aircraft 115 VAC power source to increase the oil temperature. The oil temperature switch is a "thermal temperature-delay switch" which measures the temperature of the oil in the gearbox sump.
As soon as the aircraft is powered, if the APU master switch is OFF and the oil temperature is less than 21°C, the oil heater is automatically switched ON. It is deactivated when the oil temperature reaches 43°C. Note that the oil heater has no direct connection to the ECB.

ELECTRICAL CHIP DETECTOR

The gearbox electrical chip detector LRU is installed in the drain plug. The chip detector detects the magnetic particles from the lowest point in the oil sump.
The gearbox electrical chip detector contains an electrical contact gap. This gap closes when a sufficient quantity of metal particles has been accumulated and sends a signal to the ECB.

AIR/OIL SEPARATOR

The oil reservoir is vented through an air/oil separator to the exhaust cone. When the APU operates, the air/oil separator extracts the oil from the air drawn from the lubrication scavenge pump. Once the separation is completed, the remaining air is vented through the gearbox vent line. The air/oil separator is not an LRU. All these systems are the gearbox accessories.

G7508471 - G3NT1T0 - FM49D200000003

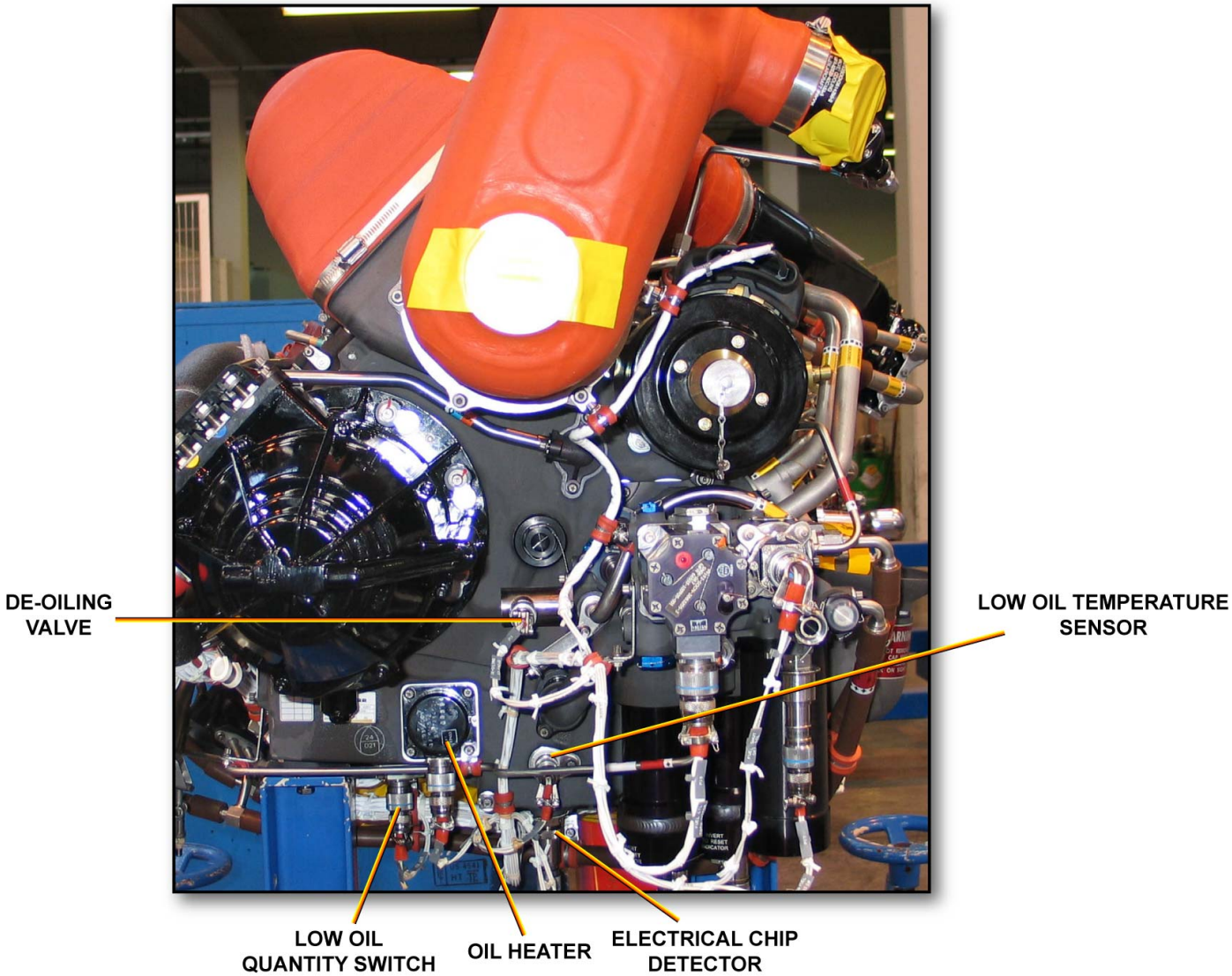

GEARBOX DESCRIPTION - GRAVITY FILLING PORT, PRESSURE FILLING PORT AND OIL OVERFLOW PORT ... AIR/OIL SEPARATOR

G7508471 - G3NT1T0 - FM49D200000003

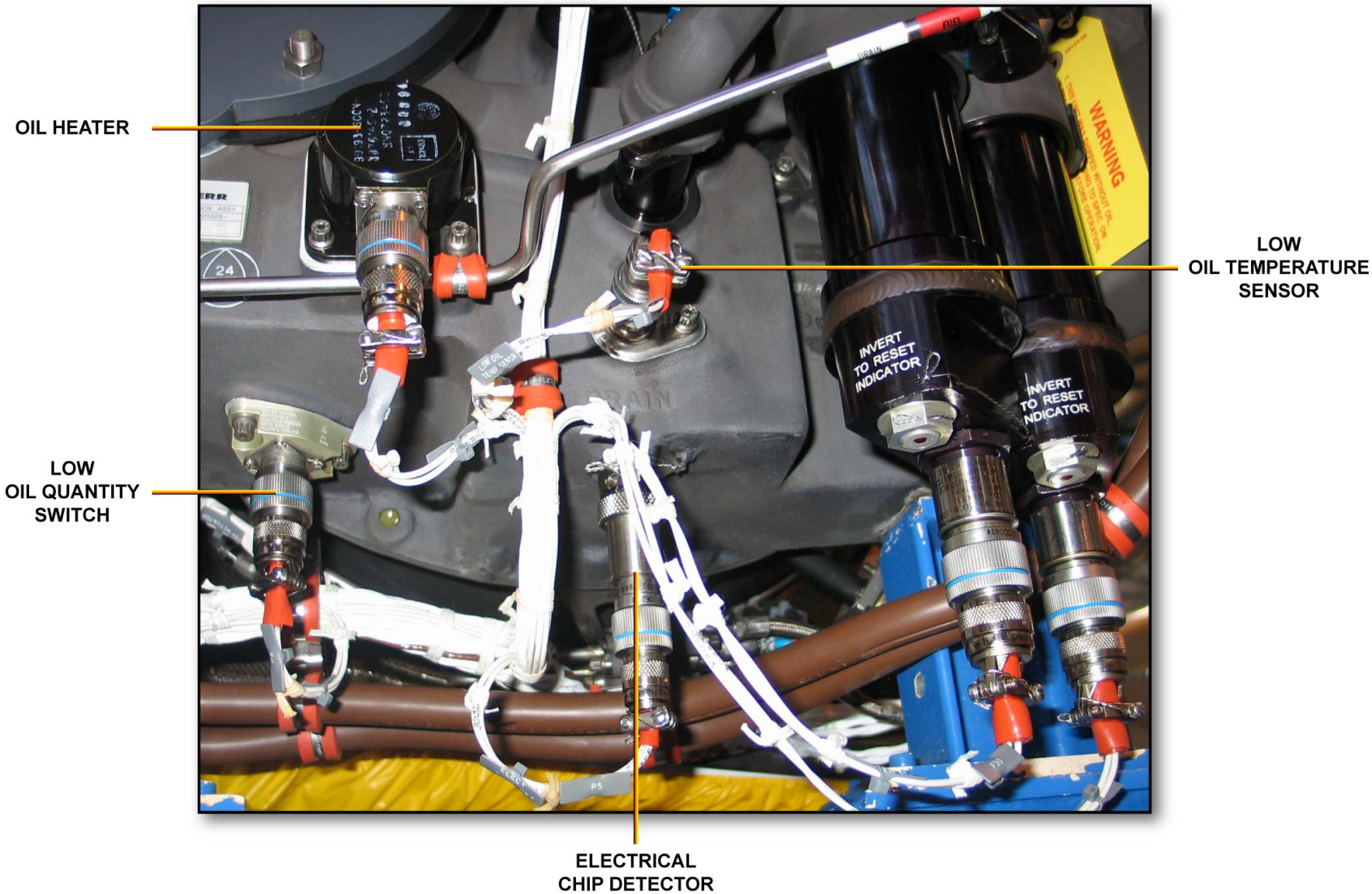

GEARBOX DESCRIPTION - GRAVITY FILLING PORT, PRESSURE FILLING PORT AND OIL OVERFLOW PORT ... AIR/OIL SEPARATOR

This Page Intentionally Left Blank

G7508471 - G3NT1T0 - FM49D200000003

APU OIL D/O (3)

OIL COOLER AND THERMAL BYPASS VALVE

The oil cooler and the thermal bypass valve are used to maintain a proper oil temperature during APU operation. The operated Thermal bypass valve operated is fully open at 60°C and fully closed at 77°C.

G7508471 - G3NT1T0 - FM49D200000003

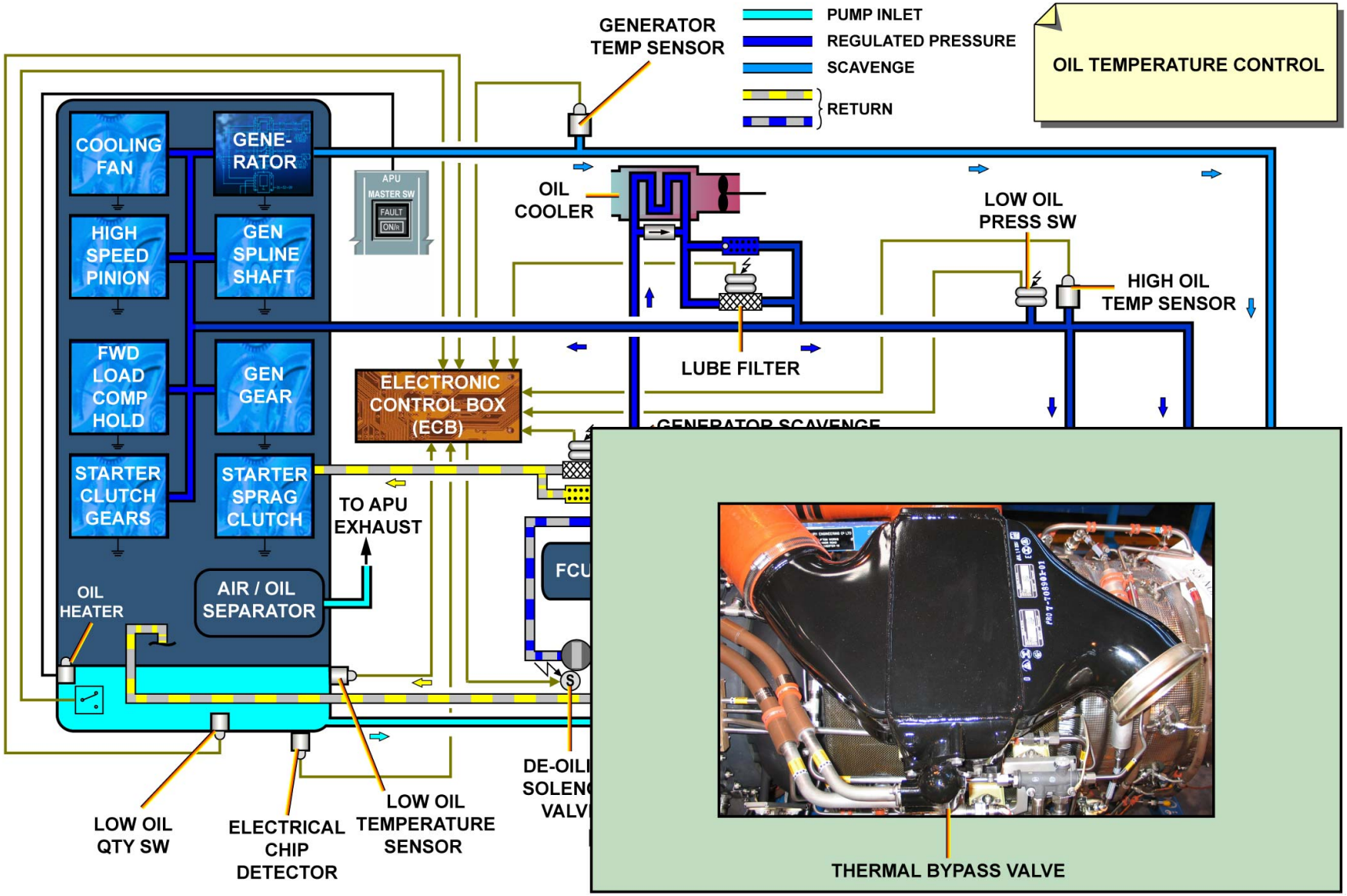

OIL COOLER AND THERMAL BYPASS VALVE

APU OIL D/O (3)

NORMAL OPERATION

In this topic, the normal operation of the oil system will be described through the feed, distribution, scavenge and vent system.
The generator High Oil Temperature (HOT) sensor is installed inside the APU generator. It measures the temperature of the generator scavenge oil. The ECB receives analog signal from this sensor and thus monitors the temperature of the generator scavenge oil.

DISTRIBUTION

Oil is pumped by three gyrotor pump elements in parallel and goes through the oil pressure relief valve located in the lubrication module, which maintains an oil pressure of 65 psig plus or minus 5 psi.
Then, oil goes through the thermal bypass valve.
If the oil temperature is less than 60°C, the valve sends the oil directly to the lube filter.
If the oil temperature is more than 60°C, the thermal bypass valve starts to close and the oil goes through the oil cooler before going into the lube filter. If the oil temperature is more or equal to 77°C the valve is fully closed.
Finally, oil is supplied to the lubrication points of:
- the APU turbine and mid-frame bearings,
- the load compressor,
- the accessory drive gearbox,
- the APU generator.

During APU start, the de-oiling solenoid valve will be energized opening in the cold condition.

G7508471 - G3NT1T0 - FM49D200000003

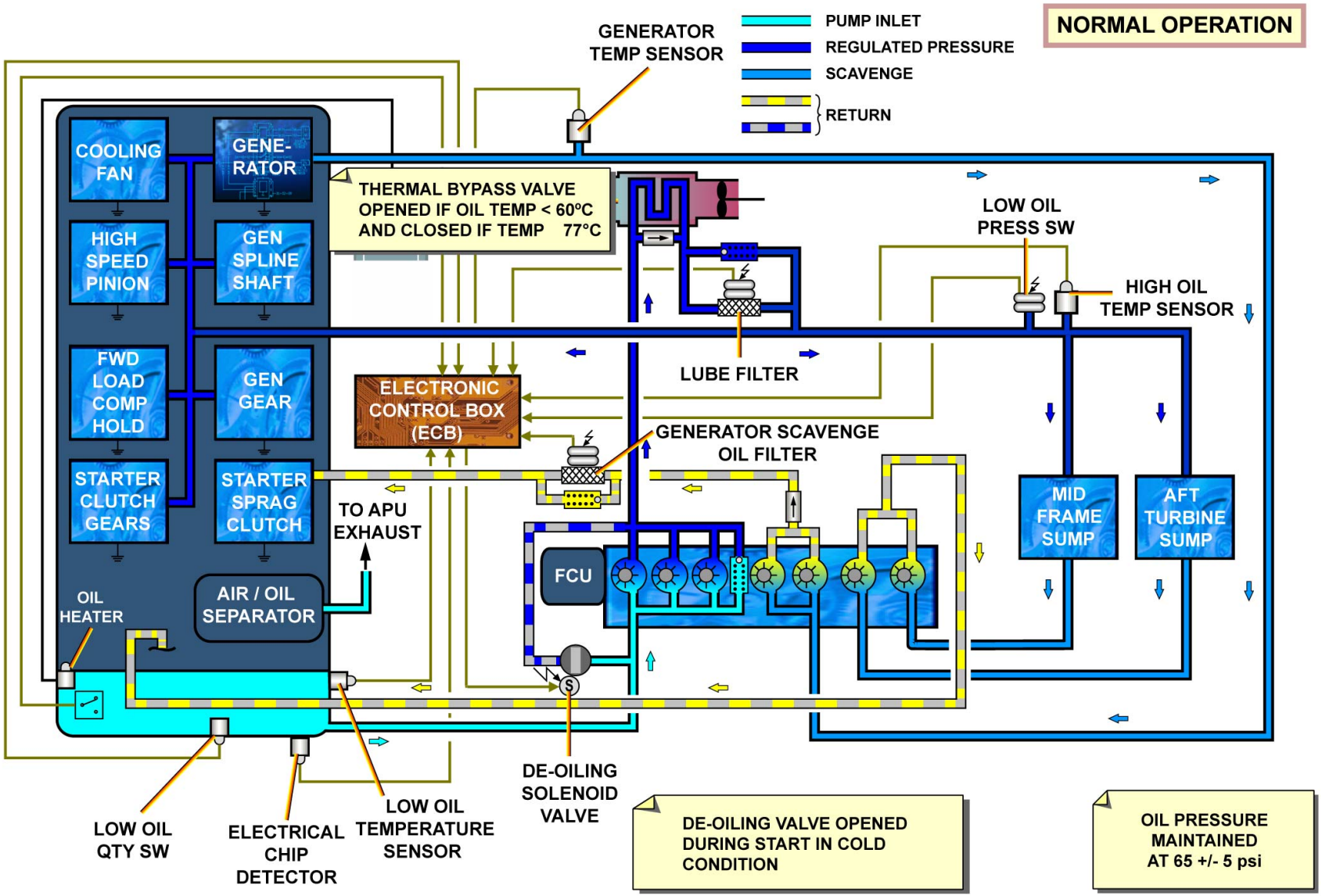

NORMAL OPERATION - DISTRIBUTION

G7508471 - G3NT1T0 - FM49D200000003

APU OIL D/O (3)

NORMAL OPERATION (continued)

SCAVENGE

The APU generator scavenge oil is picked up by three pump elements and passed through a dedicated filter element. This prevents any debris from the generator to be carried to the APU. Then, oil lubricates the starter before going back to the gearbox sump. The oil from the APU mid-frame and turbine bearings is scavenged to the oil reservoir by two gyrotor pump elements and is sent back to the gearbox sump.

OIL VENT

Oil scavenged from the oil sumps is highly contaminated by air, which leaks through the carbon face seals. Consequently, a greater volume of air and oil mixture flows through the scavenge pump elements and enters the gearbox. The air/oil separator extracts the air from the mixture and sends it outside through the exhaust duct.

G7508471 - G3NT1T0 - FM49D200000003

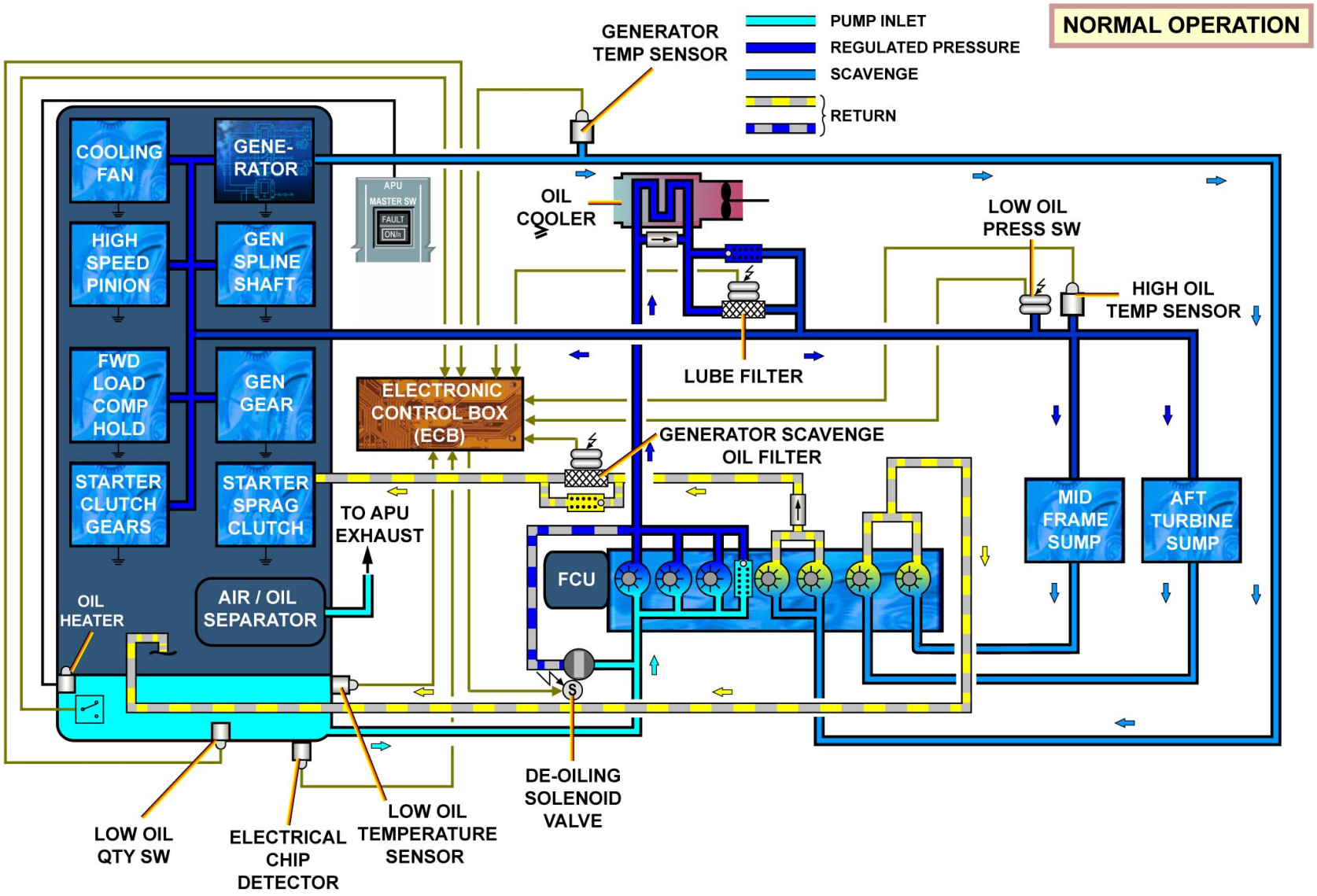

NORMAL OPERATION - SCAVENGE & OIL VENT

G7508471 - G3NT1T0 - FM49D200000003

APU OIL D/O (3)

ABNORMAL OPERATION

The LOP and High Oil Temperature (HOT) warning systems protect the APU against malfunctions, which may seriously damage the APU.

LOP CONDITION

If the oil pressure decreases to 28 psi plus or minus 2 psi, the LOP switch transmits a low oil-pressure signal to the ECB which triggers an APU shutdown.

NOTE: During the flight, the LOP shutdown is inhibited.

HOT CONDITION

Two HOT shutdowns can be initiated by the ECB:
- if the temperature measured by the oil temperature sensor is higher than 147°C, for more than 10 seconds, the ECB triggers a HOT APU shutdown,
- if the temperature measured by the generator oil temperature sensor is higher than 185°C, for more than 1 second, the ECB triggers an APU generator HOT shutdown.

NOTE: During the flight, the HOT shutdown is inhibited.

G7508471 - G3NT1T0 - FM49D200000003

ABNORMAL OPERATION

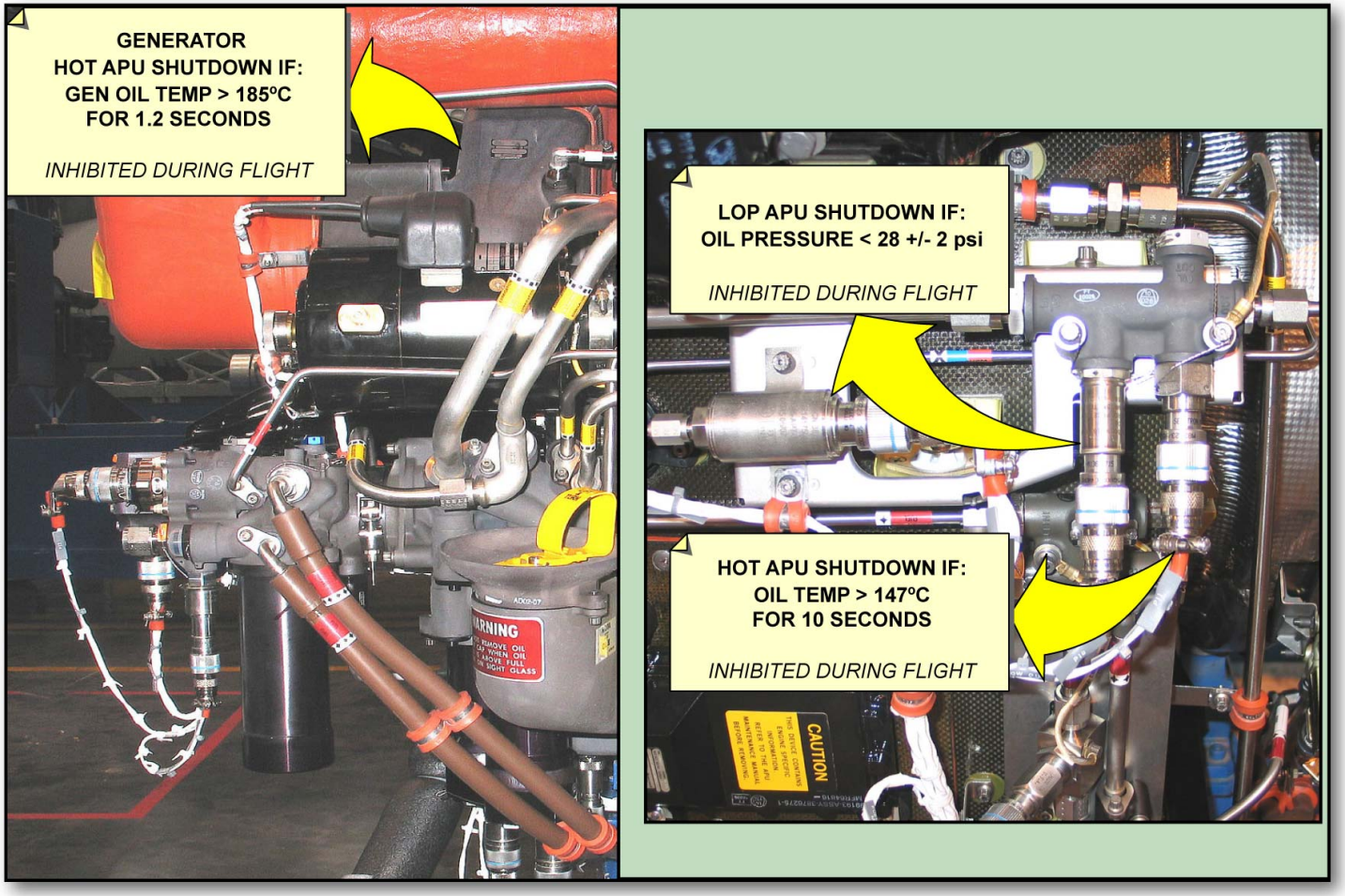

ABNORMAL OPERATION - LOP CONDITION & HOT CONDITION

G7508471 - G3NT1T0 - FM49D200000003

APU OIL D/O (3)

MONITORING

The ECB monitors the oil level status when the aircraft is on ground, the APU is not running and when the power-up initialization is finished, a few seconds after the APU master switch is pressed in.
Three conditions of the oil level are shown on the EIS and on the Centralized Maintenance System (CMS):
- if an OIL LEVEL: OK indication is displayed on the APU SERVICE DATA page of the CMS, and if no indication is displayed on the ECAM APU page, the oil level is sufficient.
- if an OIL LEVEL: CHECK indication is displayed on the APU SERVICE DATA page of the CMS, and if a CHECK OIL LEVEL message appears on the ECAM APU page, the oil level lets the APU operate for 60 hours with a oil quantity of 4 liters.
- finally, if an OIL LEVEL: LOW indication is displayed on the APU SERVICE DATA page of the CMS, and if a LOW OIL LEVEL message appears on the ECAM APU page, the oil level is less than its minimum and the APU oil reservoir needs to be refilled.

G7508471 - G3NT1T0 - FM49D200000003

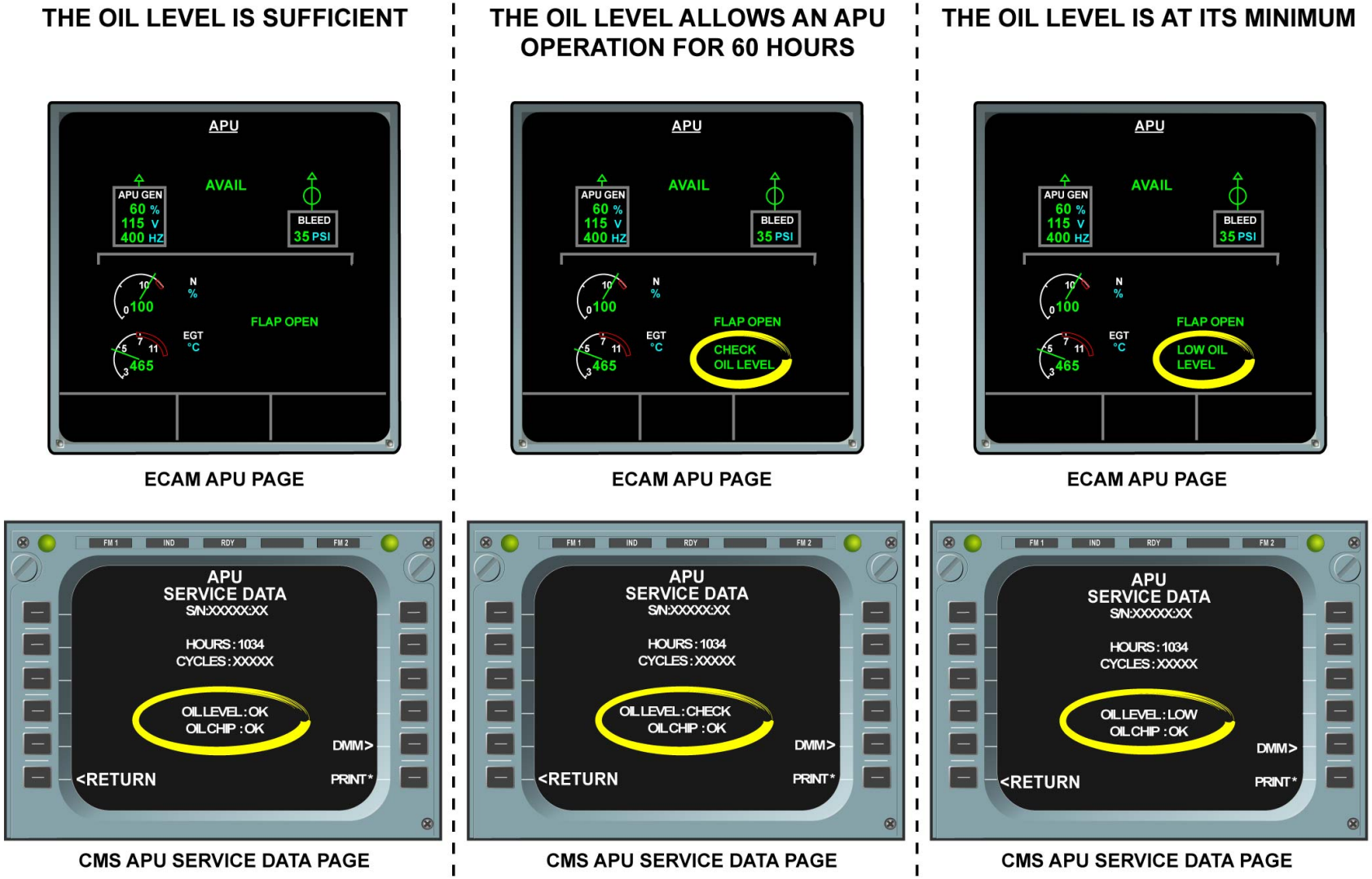

MONITORING

G7508471 - G3NT1T0 - FM49D200000003

APU OPERATION, IGNITION AND STARTING D/O (3)

DESCRIPTION

The main components of the ignition and starting system are:
- the starter motor and clutch,
- the main and backup contactors,
- the ignition unit,
- the ignition leads,
- the igniter plugs,
- the speed sensors,
- the Exhaust Gas Temperature (EGT) thermocouples,
- the data memory module,
- the Electronic Control Box (ECB).

STARTER MOTOR AND CLUTCH

The starter motor is a series-wound DC motor with an overspeed protection. It is attached to the Auxiliary Power Unit (APU) gearbox by a V-clamp. The starter motor is equipped with a green brushwear indicator. The brushes are serviceable when the indicator is visible. If the green indicator pin disappears, the starter motor must be replaced.
A square end is installed on the shaft of the motor to manually turn the APU.
A starter clutch is used for the mechanical connection via spring-loaded sprags.

MAIN / BACKUP CONTACTORs

The main start contactor is installed in the APU box, and the backup start contactor is installed in a box located in the aft underfloor compartment, in the waste tank area. These two heavy-duty contactors supply the starter motor with 28V DC.

IGNITION UNIT

The ignition unit is installed on the lower RH side of the APU in a hermetically sealed container. The ignition unit is connected to the ECB for control and to both igniter plugs to supply the required high voltage electrical pulses.
The ignition unit operates on 14 to 36V DC input voltage, and creates an output voltage greater than 18,000 V at a minimum spark rate of 2 sparks per second.

IGNITION LEADS

The ignition leads have Teflon-insulated ignition wire covered with a flexible tube of spirally-wound nickel-iron alloy and an outer stainless-steel braid. The ignition leads ensure the connection between the ignition unit and each igniter plug.

IGNITER PLUGS

Each igniter plug has:
- the electrode,
- the insulator,
- the two-piece outer shell.

The igniter plugs ignite the fuel/air mixture in the combustion chamber.

SPEED SENSORS

The speed sensors are installed between the load compressor and the air intake housing. Each of the speed sensors measure the APU speed and transmits a frequency to the ECB.

EXHAUST GAS TEMPERATURE (EGT) THERMOCOUPLES

Four thermocouples are installed in the exhaust cone at the turbine discharge. Each thermocouple is a chrome-alumel device with two probes of different length. Two thermocouple devices are connected together, forming two separate thermocouple rakes. Each thermocouple rake is connected to the ECB.

G7508471 - G3NT1T0 - FM49D500000003

MEMORY MODULE

The memory module is a digital memory device, mounted on the left side of the inlet plenum. The memory module is used to store information regarding the health monitoring and life usage of the APU.

The memory module interfaces with the ECB and stores the following information:

- APU serial number,
- APU operating hour,
- number of successful starts,
- number of unsuccessful starts,
- turbine life consumed.

G7508471 - G3NT1T0 - FM49D500000003

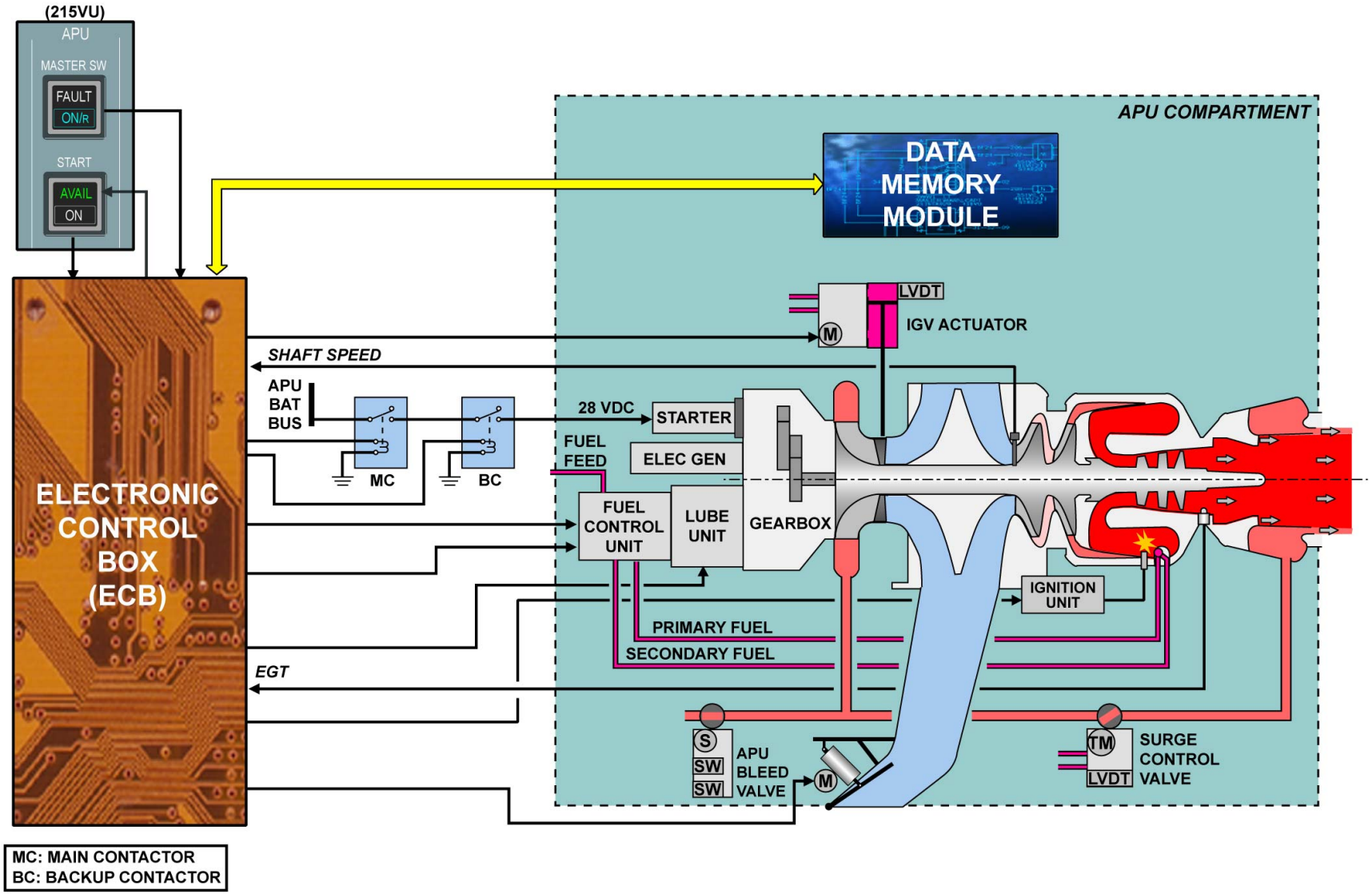

DESCRIPTION - STARTER MOTOR AND CLUTCH ... MEMORY MODULE

G7508471 - G3NT1T0 - FM49D500000003

This Page Intentionally Left Blank

G7508471 - G3NT1T0 - FM49D500000003

APU OPERATION, IGNITION AND STARTING D/O (3)

DESCRIPTION (continued)

ELECTRONIC CONTROL BOX (ECB)

The ECB is a microprocessor-based digital electronic controller that is the primary part of the APU system logic. In addition to controlling the APU, the ECB has an integral BITE capability specifically incorporated to shorten diagnostic operations for troubleshooting.
The main interfaces to the ECB are:
- the APU control P/Bs on the overhead panel,
- the bleed and surge air system,
- the Environmental Control System (ECS),
- the Ground Control Unit (GCU),
- the Central Maintenance System (CMS),
- the memory module,
- the APU actuators, sensors and probes,
- the EIS,
- the Aircraft Condition Monitoring System (ACMS).

G7508471 - G3NT1T0 - FM49D500000003

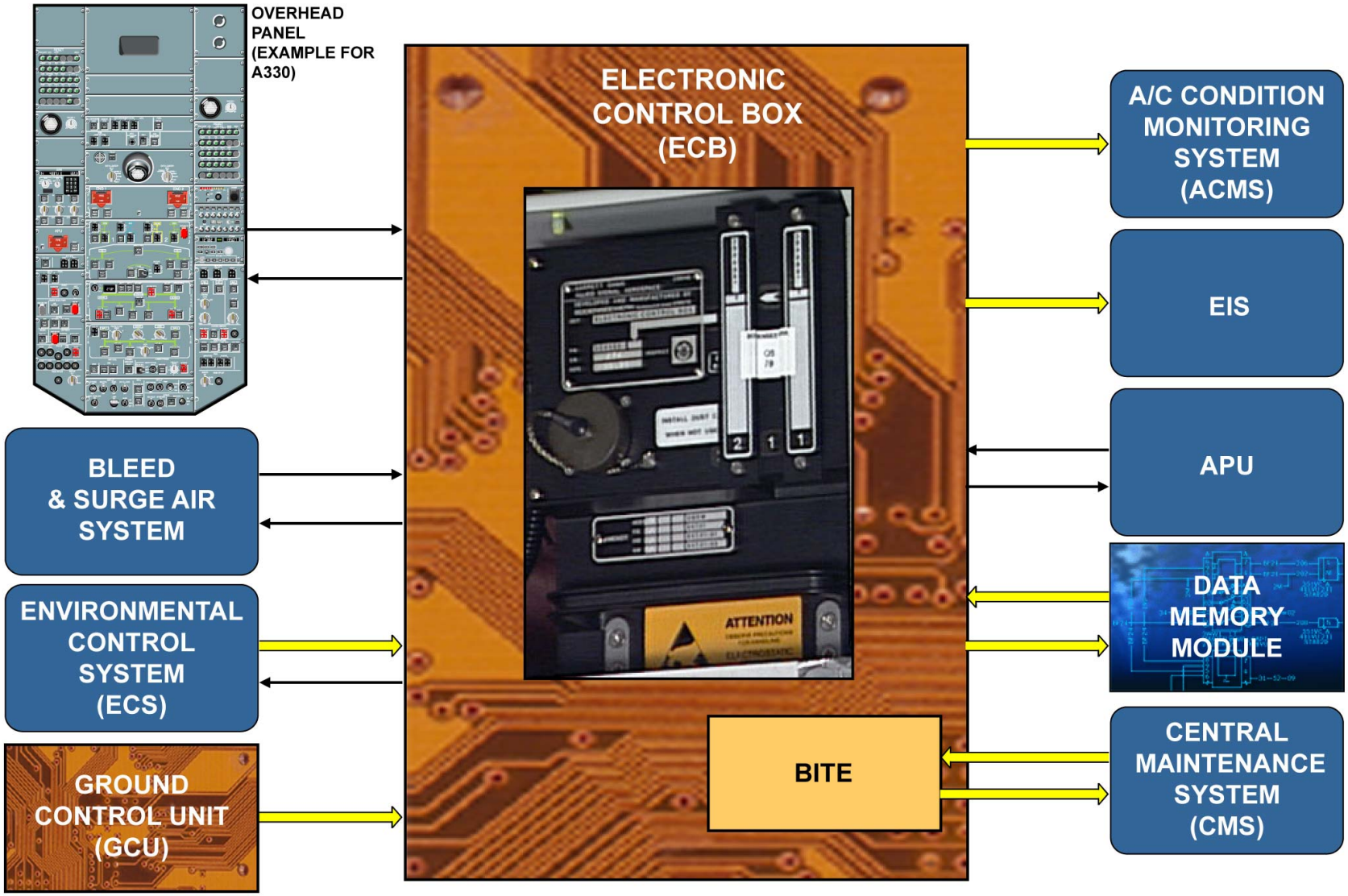

DESCRIPTION - ELECTRONIC CONTROL BOX (ECB)

APU OPERATION, IGNITION AND STARTING D/O (3)

APU START OPERATION

The starting sequence is divided into two parts:
- the start initialization via the APU MASTER SWitch,
- starting the APU starter motor via the START P/BSW.

MASTER SWITCH ON

When the MASTER SWitch is set to ON, the ECB is electrically supplied and the following sequence occurs:
- the ON/R light comes on,
- the APU page is automatically displayed on ECAM, but with only amber crosses,- the ECB starts a power up test and checks the condition of all necessary items,

After a successful power up test of the ECB, the following sequence occurs:
- the APU parameters are normally displayed in green on ECAM,
- the APU fuel feed line is pressurized,
- the air intake flap actuator opens,
- the Inlet Guide Vanes (IGVs) receive a signal for closure,

Then, once the inlet flap is fully open, the FLAP OPEN message appears on the ECAM APU page and the APU is ready to be started.

START P/BSW ON

When the START P/B is set to ON:
- the ON light on the P/B comes on,
- the de-oiling solenoid valve, used to unload the lube pump, opens if required,
- the start contactors close and energize the starter motor,.

Then, APU speed (N) increases.
When APU speed reaches 7%, the ECB energizes the ignition system, opens the fuel solenoid Shut-Off Valve (SOV) and the Fuel Metering Valve (FMV) starts to regulate the fuel flow.
When APU speed is around 50%, the ECB opens the start contactors to de-energize the starter motor and cuts off the ignition.
At 60%, the de-oiling valve closes if it was open.

APU AVAILABLE

When APU speed reaches 95%, the ON light on the START P/B goes off, the AVAIL light comes on in green, the AVAIL message appears on the ECAM APU page and an APU AVAIL message appears on the ECAM EWD memo.
100% is the APU governed speed. The ECB switches to this schedule by regulating the fuel flow in the Fuel Control Unit (FCU). The APU generator can be used and the APU BLEED can be switched on.
The ECB compensates the electrical and pneumatic load effects on speed, by acting on the fuel flow to maintain an APU constant speed at 100%.

G7508471 - G3NT1T0 - FM49D500000003

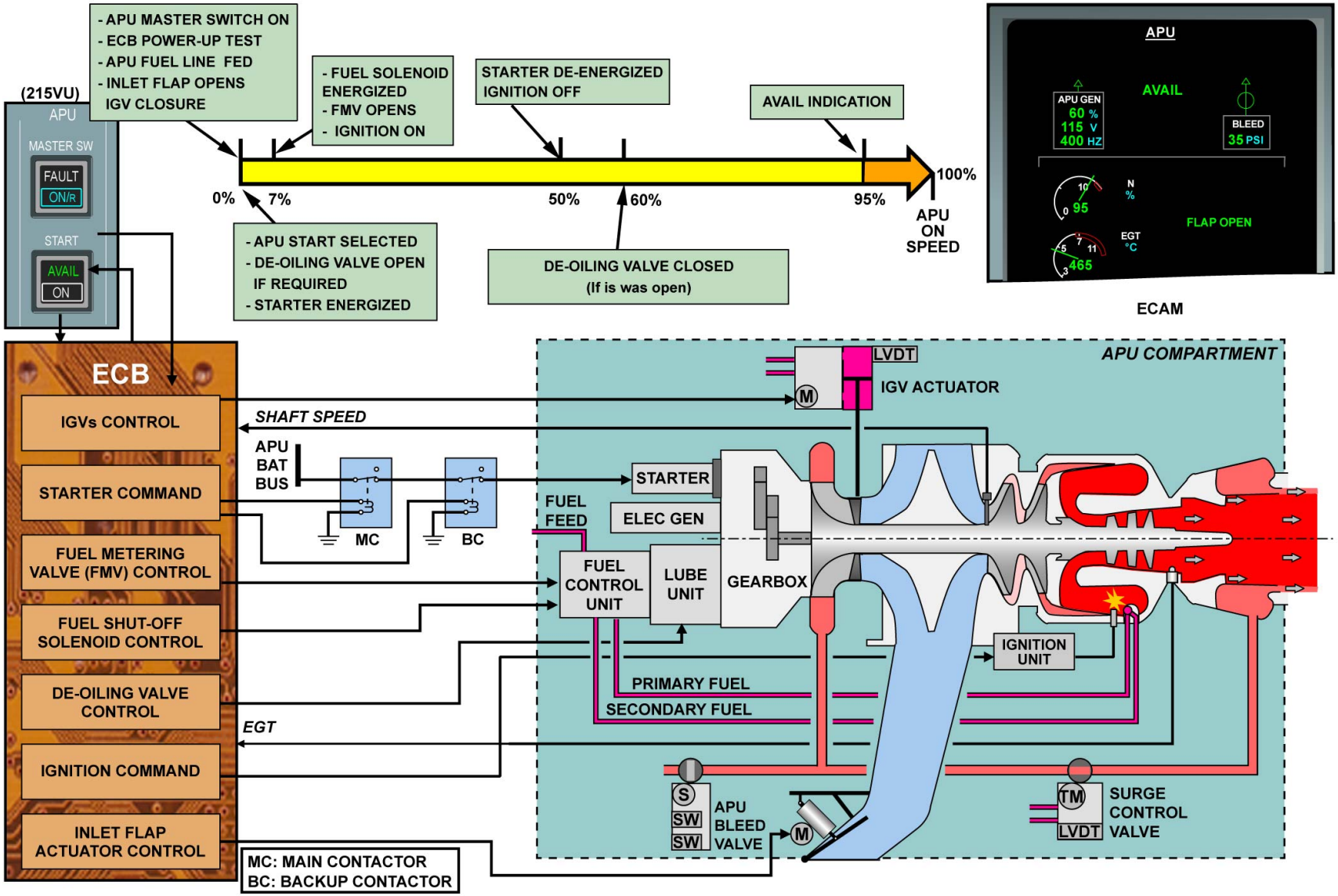

APU START OPERATION & APU AVAILABLE

G7508471 - G3NT1T0 - FM49D500000003

APU OPERATION, IGNITION AND STARTING D/O (3)

NORMAL APU SHUTDOWN

A normal APU shutdown is initiated when the APU MASTER SW is set to OFF.
Once the shutdown sequence is initiated, the pneumatic load is removed by the ECB by closing the IGVs, opening the surge control valve and closing the APU bleed valve if it was not already closed.
On ground only, the APU will remain at 100% speed for approximately 15 seconds to allow electrical source synchronization for no-break power transfer.
Then, APU speed decreases down to 82% for a 85 seconds cool down period. This cool down period is only initiated if the A/C is below 23,000 feet and for a normal shutdown sequence.
During the entire cool down period the IGVs are closed and the surge control valve is open.
When APU speed decreases below 95%, the AVAIL legend goes off on the START P/BSW.
At the end of the cool down period, the ECB sends an overspeed signal in order to test the overspeed protection circuit and by this way to shutdown the APU. The fuel solenoid SOV is closed, the de-oiling valve is open to return the oil to the sump, and the ecology drain valve is open to blow out the residual fuel from the fuel manifold. In this mode no protective shutdown is recorded by the ECB.
When the speed has decreased down to 7%, the following sequence is controlled by the ECB:
- de-oiling solenoid valve is closure,
- ecology drain valve closure,
- inlet flap starts to close,
- APU fuel feed line is depressurized.

During APU roll down, APU re-start is possible if the MASTER SWitch is set to ON again under the condition that speed is still above 7%.
Once the inlet flap has reached its fully closed position, the ECB is self-de-powered and all indications on the APU page change to amber crosses. Data related to the last run of the APU is transmitted to the memory module.

G7508471 - G3NT1T0 - FM49D500000003

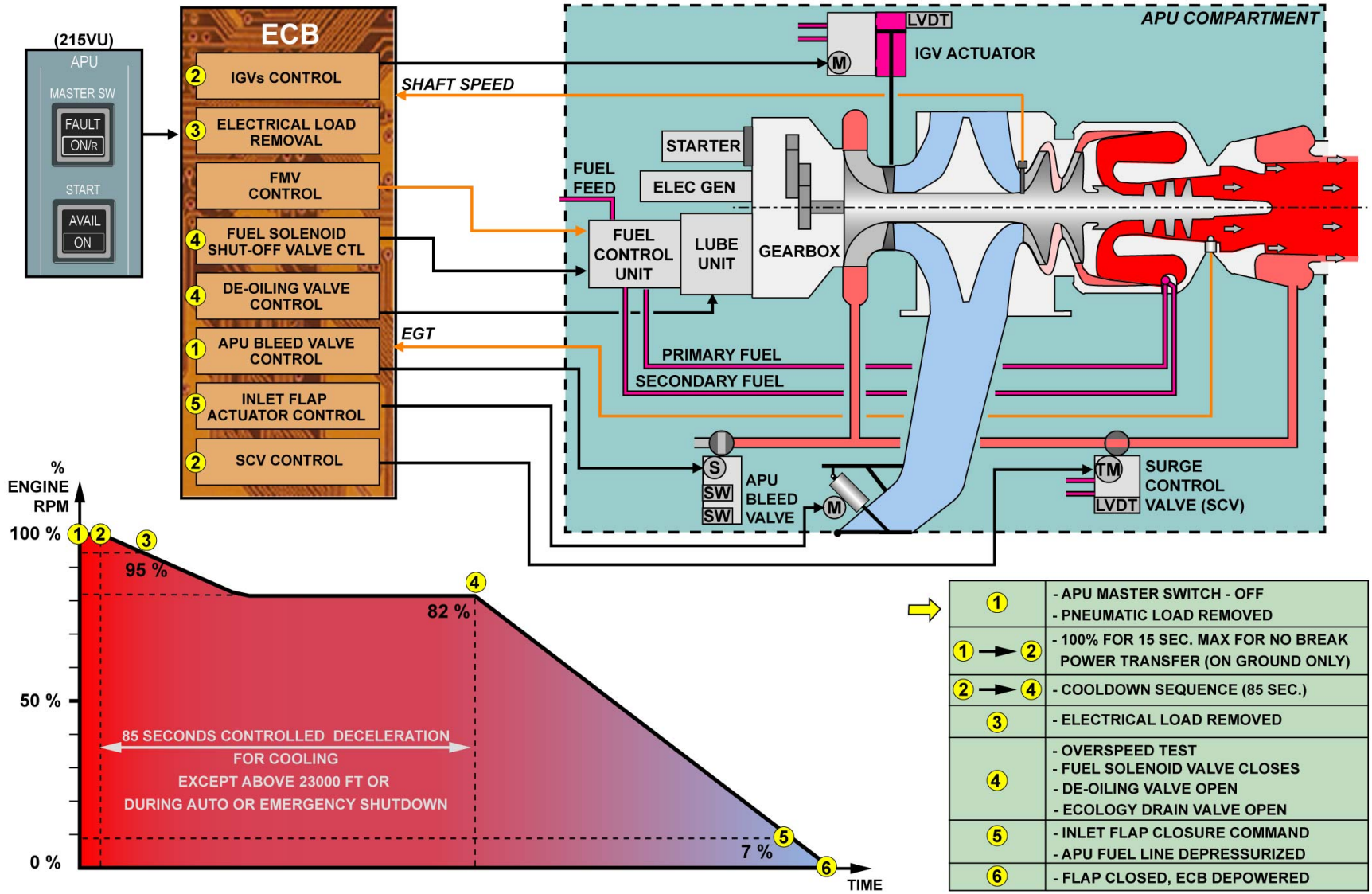

NORMAL APU SHUTDOWN

G7508471 - G3NT1T0 - FM49D500000003

APU OPERATION, IGNITION AND STARTING D/O (3)

PROTECTIVE SHUTDOWNS

A protective shutdown logic shuts down the APU automatically whenever continued APU operation would result in damage to the A/C, the APU or the ECB. The shutdown sequence is the same as the normal shutdown sequence except that there is no 85 seconds cooling period.
Three shutdown conditions are active at all times:
- the overspeed shutdown, when APU speed reaches 107%,
- the ECB significant internal failure (1A) shutdown, such as:
- loss of overspeed protection,
- CPU or RAM CPU or EPROM CPU failure,
- CPU power supply failure, ...
- the emergency shutdown triggered by:
- the APU fire and overheat detection system (only on ground),
- the APU FIRE P/BSW on the overhead panel,
- the APU SHUT OFF P/BSW, on the external power control panel, at the fuselage near the NLG,
- the APU EMERG SHUTDOWN P/BSW on the refuel/defuel panel at the belly fairing.
The other shutdown conditions are inhibited from the start of the first engine to the shutdown of the last engine (i.e. from flight phase 2 to 9).
These shutdown conditions are:
- High Oil Temperature (HOT), when the oil temperature is above 147°C (297 °F),
- Low Oil Pressure (LOP),
- Generator High Oil Temperature shutdown, when the temperature is above 185°C (365 °F),
- EGT sensor failure: i.e. loss of EGT signal (failure of both thermocouple rakes),
- EGT overtemperature, when EGT exceeds 1,260°C (2,300 °F) during start or exceeds 1,232°C (2,250 °F) during on-speed operation,
- underspeed: i.e. speed dropping below 88% when APU is on-speed,
- inlet flap not fully open,
- no acceleration: insufficient acceleration rate
- no flame: EGT remains below 205 °C (400 °F) for 30 seconds during start sequence.
- load compressor overtemperature:
. load compressor inlet temperature (T2) is above 177°C (350 °F),
. load compressor outlet temperature is above 250°C (480 °F),
. reverse flow condition,
. surge control valve abnormal position,
- oil filter clogged: lube filter or/and generator scavenge oil filter differential pressure switch is closed (clogging condition) with oil temperature above 38 °C (100 °C).
- oil chip detection
- ECB internal failure (1B): 15 VDC power supply failure or power supply monitoring failure
- main power interrupt above 0.5 second while APU is running
The cause of APU auto-shutdown is stored in the ECB memory.

G7508471 - G3NT1T0 - FM49D500000003

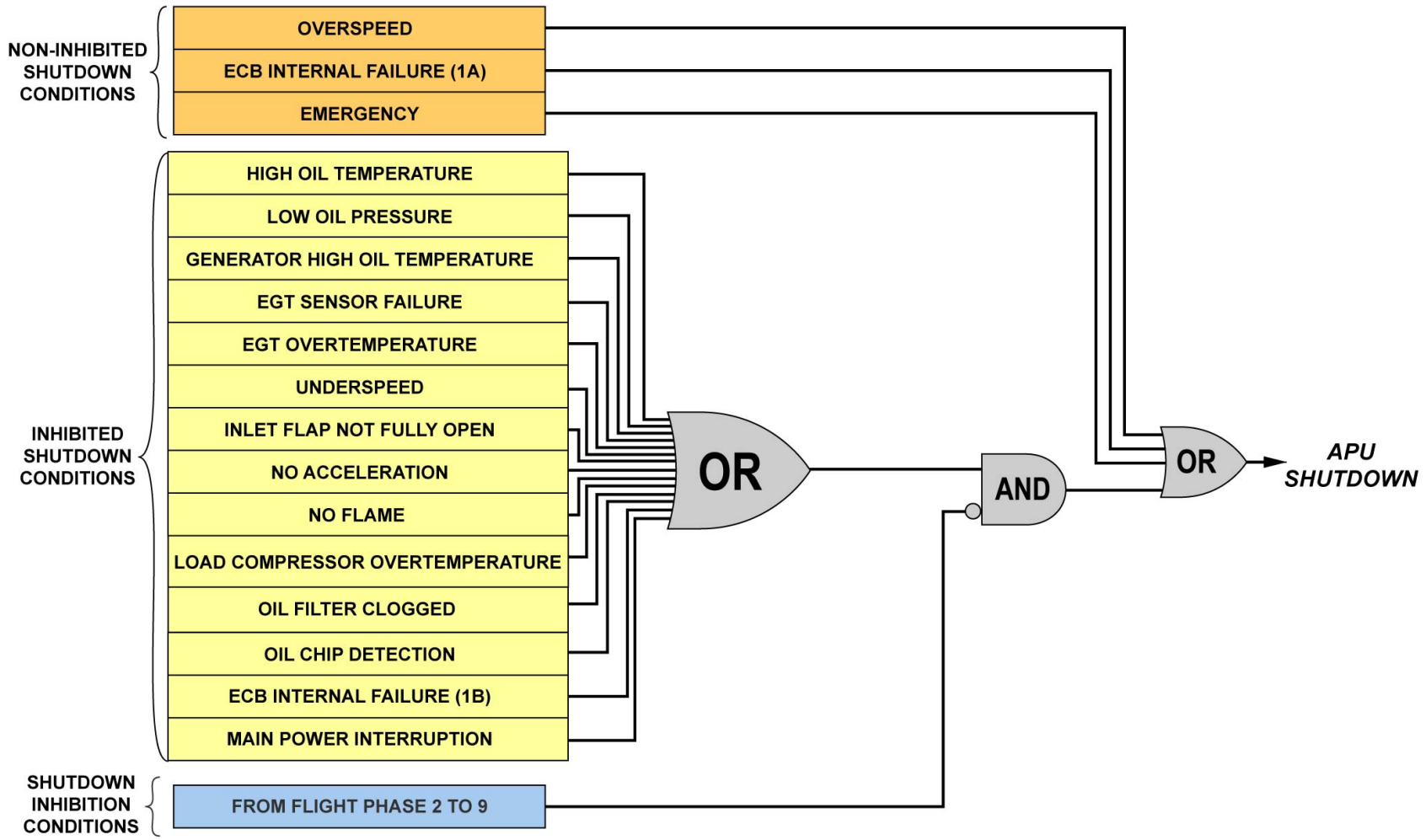

PROTECTIVE SHUTDOWNS

G7508471 - G3NT1T0 - FM49D500000003

AIRBUS S.A.S.
31707 BLAGNAC cedex, FRANCE
STM
REFERENCE G7508471
NOVEMBER 2008
PRINTED IN FRANCE
AIRBUS S.A.S. 2008
ALL RIGHTS RESERVED

AN EADS COMPANY

A330-200/300
TECHNICAL TRAINING MANUAL
MAINTENANCE COURSE - T1 (LVL 2&3) (RR Trent 700)
STRUCTURE

This document must be used for training purposes only

Under no circumstances should this document be used as a reference

It will not be updated.

All rights reserved
No part of this manual may be reproduced in any form,
by photostat, microfilm, retrieval system, or any other means,
without the prior written permission of AIRBUS S.A.S.

AIRBUS Environmental Recommendation
Please consider your environmental responsability before printing this document.

STRUCTURE

Doors D/O (3) 2
Fuselage D/O (3) 16
Pylons/Nacelles D/O (3) 50
Stabilizers D/O (3) 58
Windows D/O (3) 94
Wings D/O (3) 108
Structure Repair Manual (SRM) D/O (3) 152
Damage Assessment Example 1 D/O (3) 188
Damage Assessment Ex. 1 Operational Scenario (3) 280
Damage Assessment Ex. 2 Operational Scenario (3) 288

G7508471 - G3NT1T0

DOORS D/O (3)

GENERAL

The fuselage has:
- 6 type A (1.93 m (76 in.) x (1.07 m (42 in.)) passenger doors,
- 2 type I (0.61 m (24 in.)) x 1.66 m (65 in.) emergency exit doors,
- 2 cargo compartment doors,
- 1 bulk cargo compartment door,
- landing gear bay doors and access doors for servicing and maintenance.

G7508471 - G3NT1T0 - FM51DW000000001

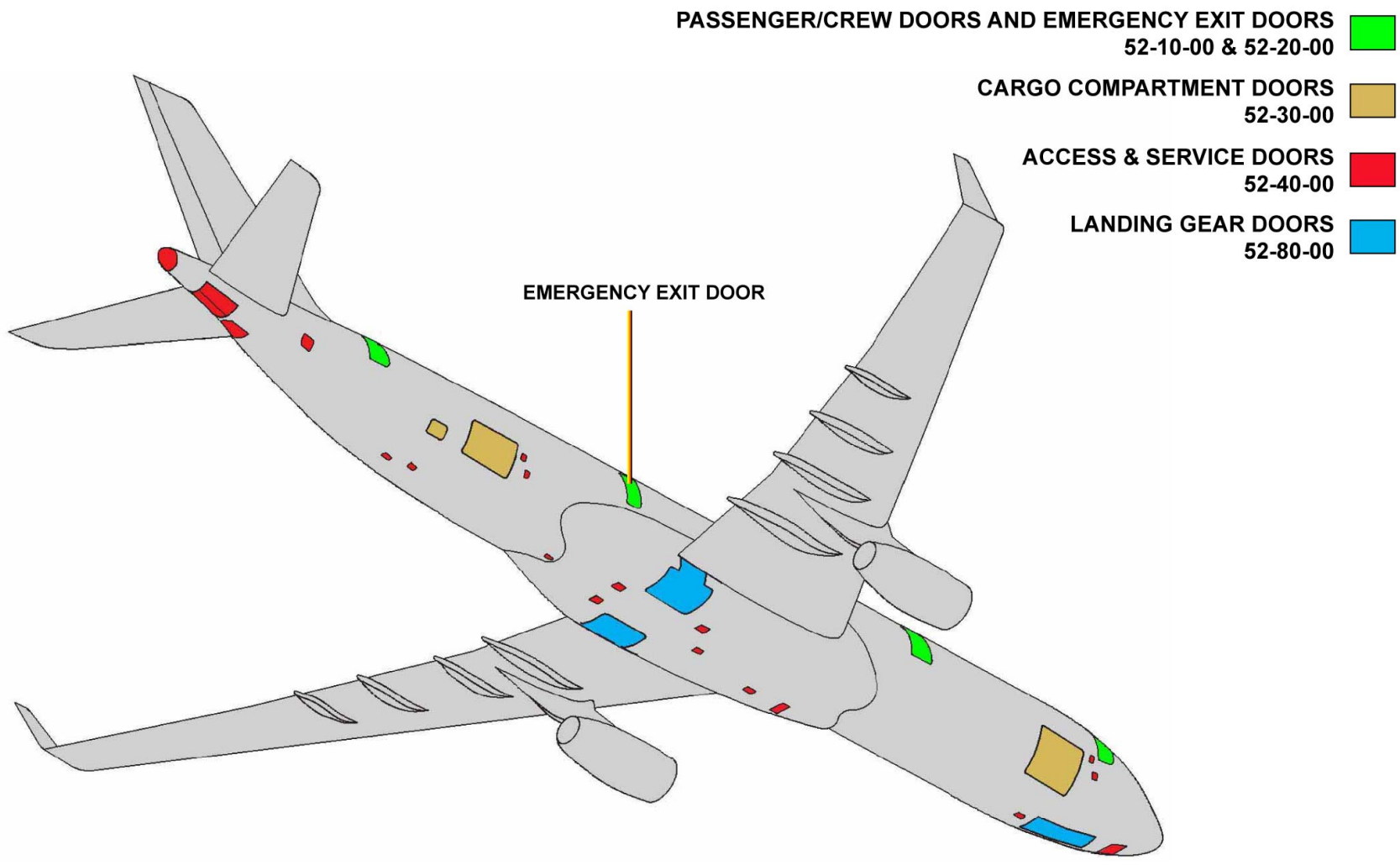

GENERAL

G7508471 - G3NT1T0 - FM51DW000000001

DOORS D/O (3)

PASSENGER DOORS

Passenger doors:
The aircraft has six passenger doors (type A), located on each side of the fuselage at frames (Fr) 14/16A, Fr 33/35A and 73A/75A.
normal operation of the door is possible from the inside and the outside of the aircraft. Emergency operation is only possible from the inside. The doors are of fail-safe, plug-type construction. The door structure is of conventional design, composed of outer and inner skins, segments, beams and two lateral frames on which are fixed hinge fittings and locking mechanisms. The loads resulting from cabin pressure are transferred by eight stops located on each side of the door.
Emergency exit doors:
Two additional type I passenger emergency exits, one on each side of the fuselage, are provided aft of the wing between Fr 53.5 and 53.7. The structural design and operation of these plug-type exits is similar to that of the main doors.
Pax and emergency exit doors have an evacuation system in the lower part of the door (slide or slide/raft).

G7508471 - G3NT1T0 - FM51DW000000001

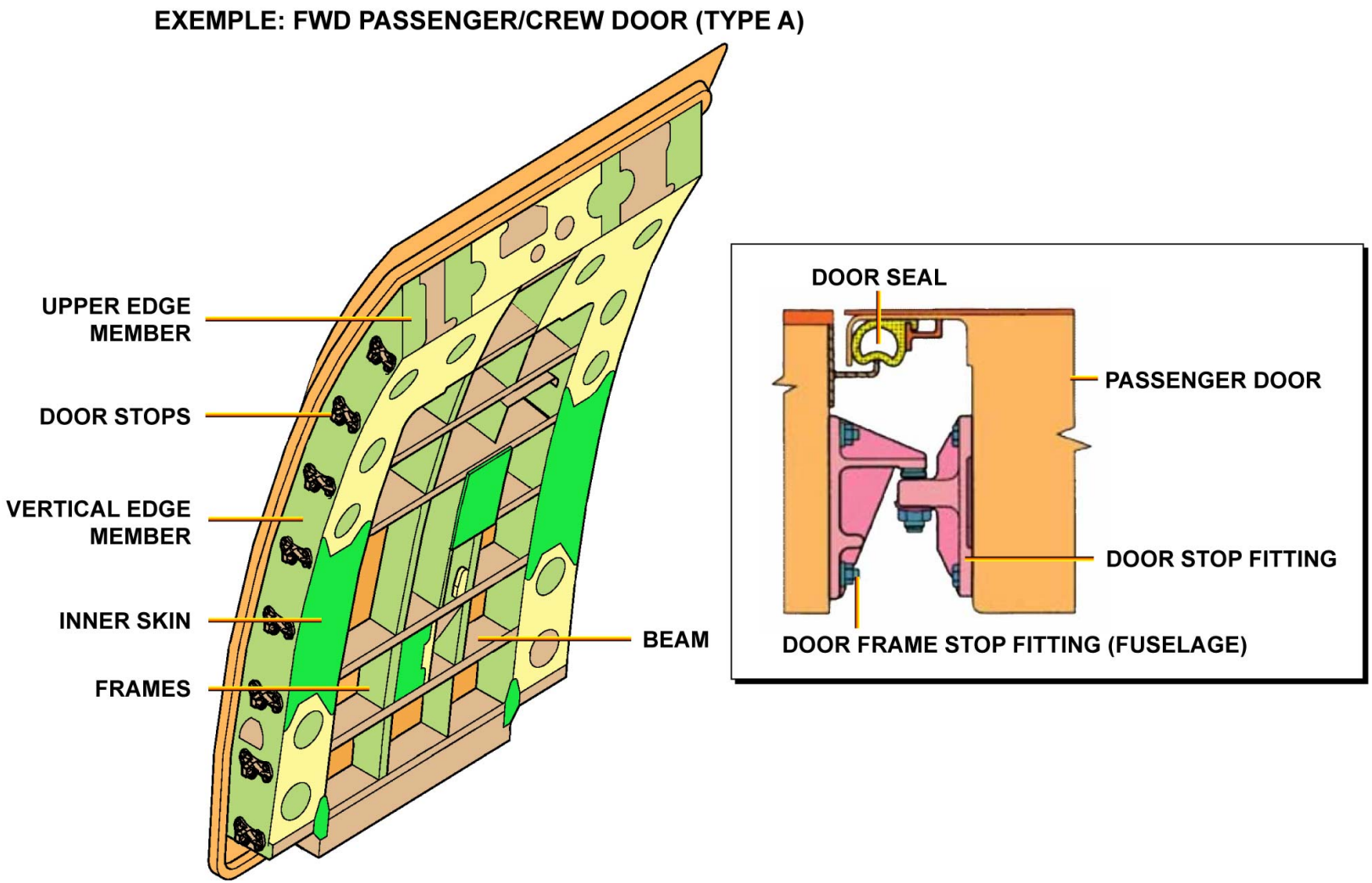

PASSENGER DOORS

G7508471 - G3NT1T0 - FM51DW000000001

DOORS D/O (3)

CARGO COMPARTMENT DOORS

FWD & REAR CARGO DOORS

Two doors in the lower RH side of the fuselage give access to the main cargo compartments. The FWD door is located between Fr 20 and 25 and the aft door is located between Fr 59 and 65.
The doors are designed to carry the hoop tension loads from internal pressure. With this consideration, they are of conventional design and have:
- outer and inner skins,
- internal structure of drop-forged machined circumferential frames.
The upper ends of these frames are hinges for the door, and the lower ends are attachment for the locking hooks.

G7508471 - G3NT1T0 - FM51DW000000001

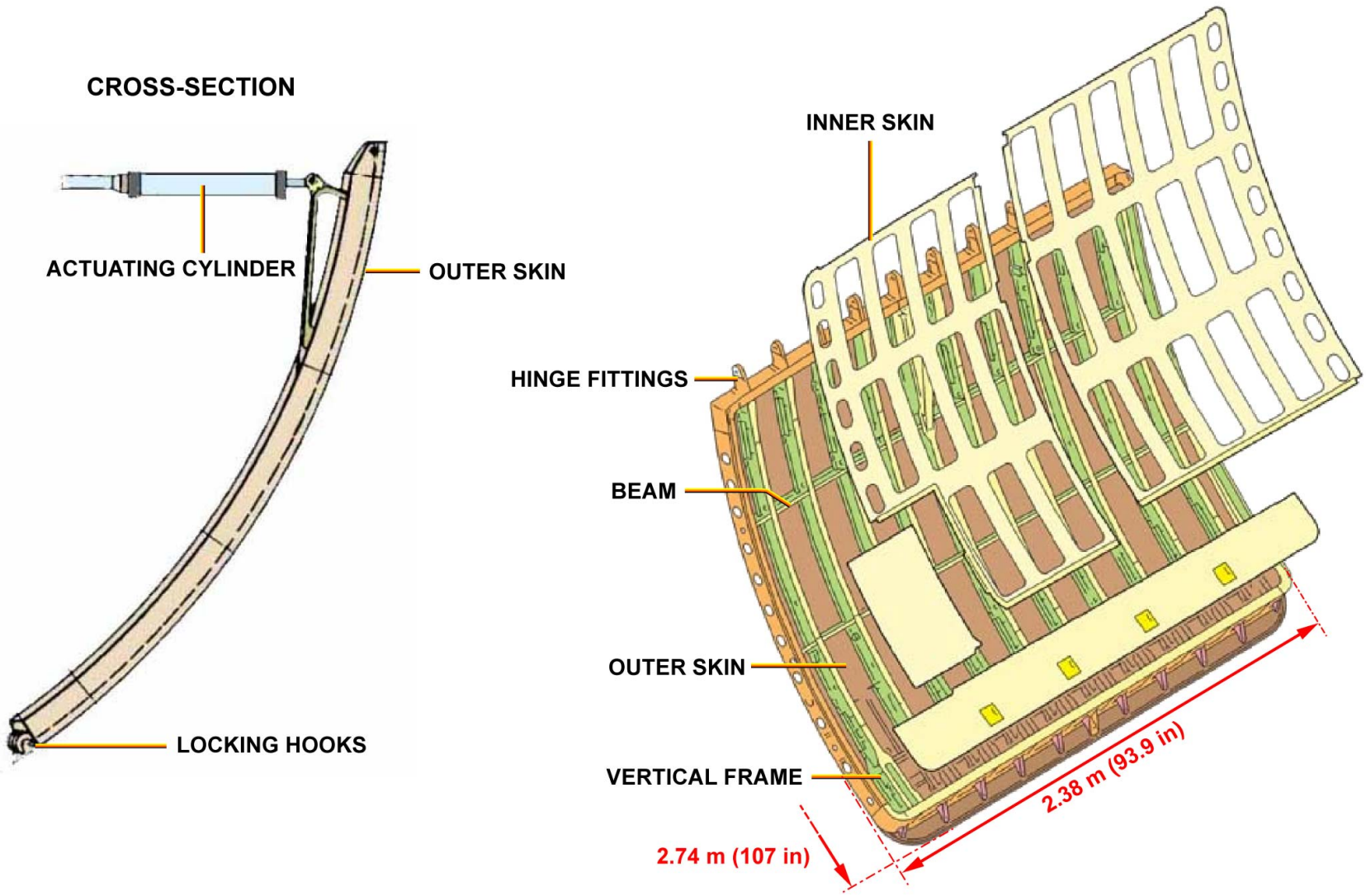

CARGO COMPARTMENT DOORS - FWD & REAR CARGO DOORS

G7508471 - G3NT1T0 - FM51DW000000001

DOORS D/O (3)

CARGO COMPARTMENT DOORS (continued)

BULK CARGO DOOR

The bulk compartment, at the rear, has a conventional plug-type door, located between Fr 67 and 69.
The door is operated, locked and unlocked manually. It is opened by being pushed inward and upward and is locked in the open position on the ceiling of the compartment (In this compartment nets are provided to maintain the clearance for the door opening). The weight of the door is compensated by a tension spring. The door is connected to the door locking warning system.

G7508471 - G3NT1T0 - FM51DW000000001

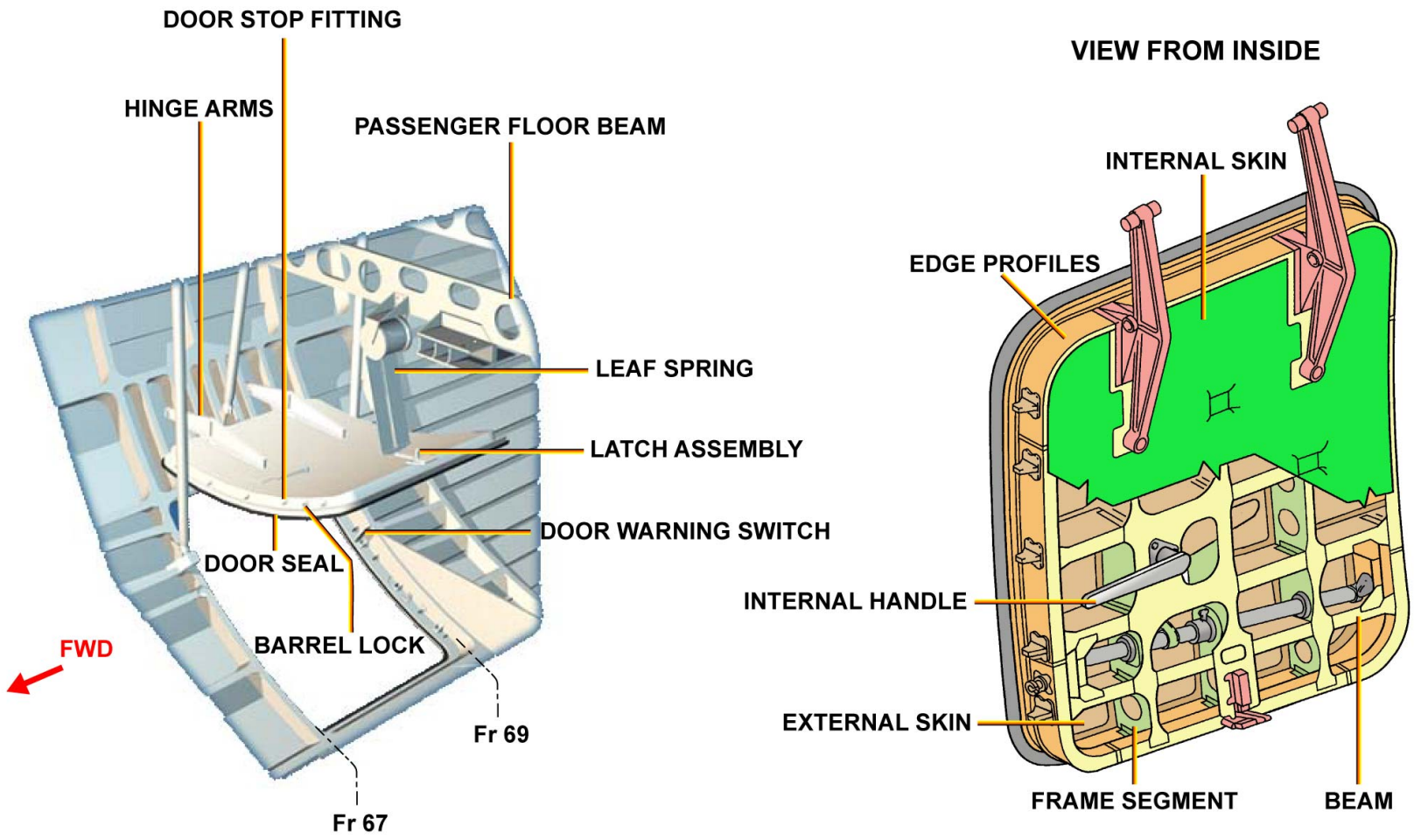

CARGO COMPARTMENT DOORS - BULK CARGO DOOR

G7508471 - G3NT1T0 - FM51DW000000001

DOORS D/O (3)

ACCESS & SERVICE DOORS

Access doors are installed in the aircraft to enable inspection of the structure and to give access to maintenance. Service doors are installed in the fuselage to get access to the servicing of systems.
All access and service doors are manually opened and closed.
Access and service doors are illustrated as follows:
- Avionics compartment door: the avionics compartment access door is installed at the bottom of the fuselage in a pressurized area of the aircraft. It is installed between Fr 7 and Fr 10. The door can be opened from the inside or the outside.
- Ram Air Turbine (RAT) door: the RAT door is installed at the RH side flap track fairing n° 4. A spring strut keeps the door in the closed position.
- APU (Auxiliary Power Unit) access doors: the APU access doors are installed in the fuselage tail cone. They are the lower part of the fuselage between Fr 95 and Fr 101. These doors give you access to the APU for maintenance.

The aircraft has access and service doors that are not illustrated; these doors are located in the fuselage and belly fairing for water, waste, external power and maintenance.

G7508471 - G3NT1T0 - FM51DW000000001

AVIONIC COMPARTMENT ACCESS DOOR

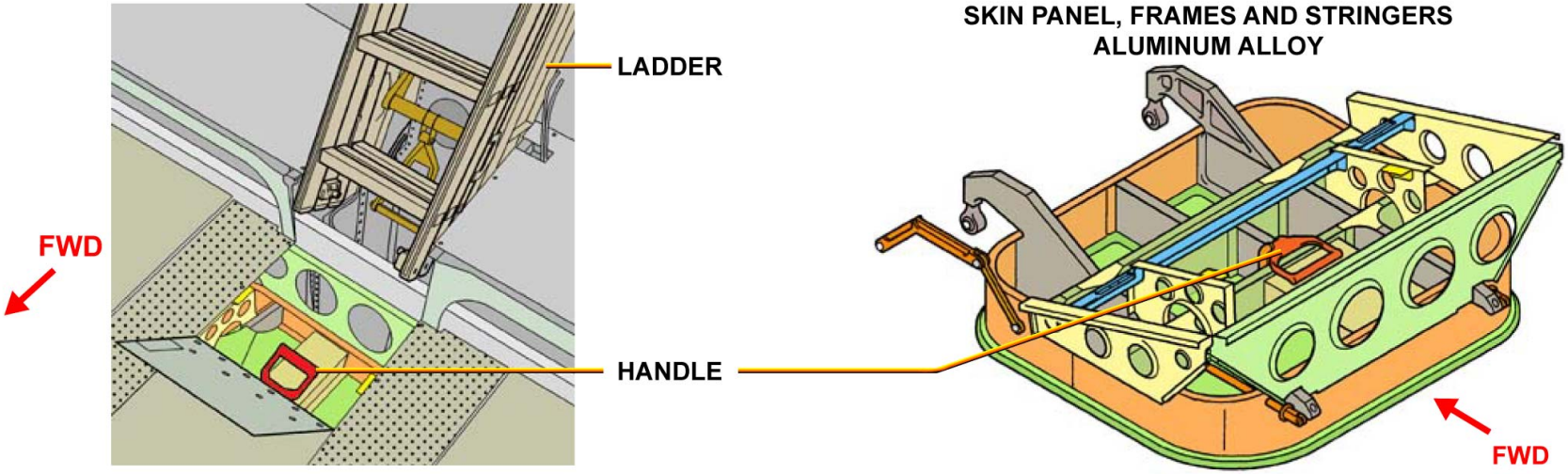

Ram Air Turbine (RAT) ACCESS DOOR

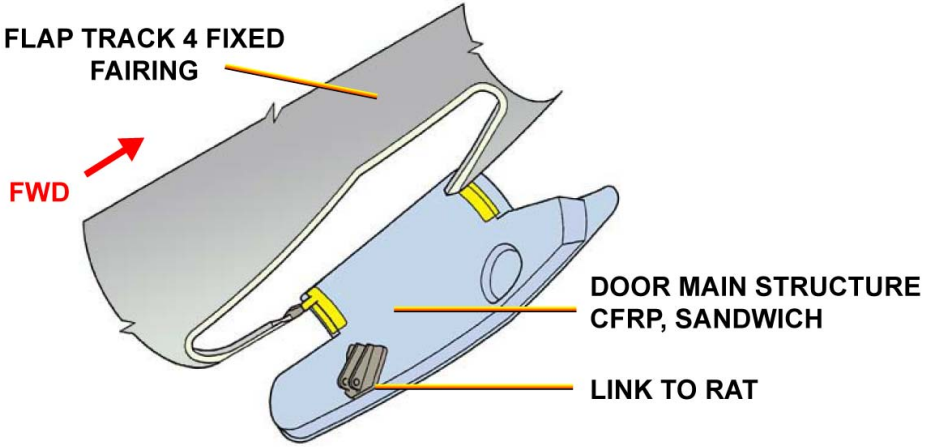

APU ACCESS DOORS

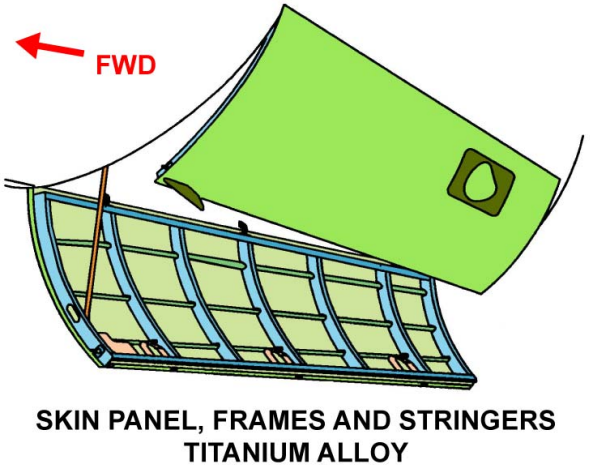

ACCESS & SERVICE DOORS

DOORS D/O (3)

LANDING GEAR DOORS

NLG (NOSE LANDING GEAR)

The landing gear doors give protection to the landing gear when the aircraft is in flight. The nose landing gear doors are located between Fr 11 and 17.

The nose and auxiliary landing gear doors have five parts:

- two forward doors, hydraulically actuated, which can be closed with the gear in the extended or retracted position. These doors are made from CFRP (Carbon Fiber Reinforced Plastic) sandwich materials with honeycomb core. They are hinged to the landing gear bay longitudinal edges.
- two AFT doors, linked to the gear by a rotating rod, which are made from CFRP sandwich materials with honeycomb core. The purpose of these doors, hinged to the landing gear bay rear lateral edge, is to allow the FWD doors to be retracted when the gear is extended.
- one small door (fixed door) attached to the landing gear leg is made from aluminum alloy.

G7508471 - G3NT1T0 - FM51DW000000001

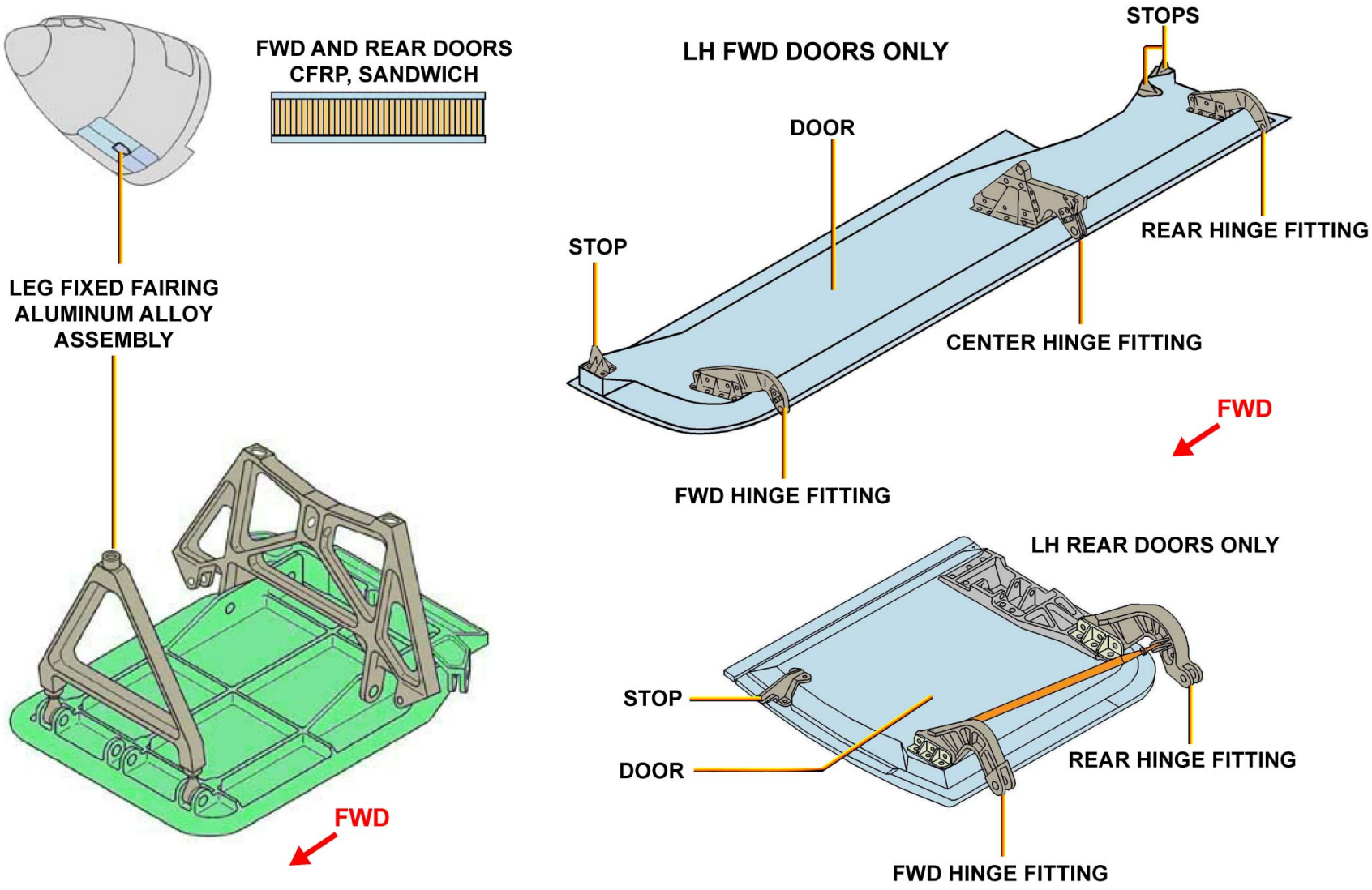

LANDING GEAR DOORS - NLG (NOSE LANDING GEAR)

G7508471 - G3NT1T0 - FM51DW000000001

DOORS D/O (3)

LANDING GEAR DOORS (continued)

MLG (MAIN LANDING GEAR)

The main landing gear doors, located between Fr 47 and 53.2, are made from CFRP sandwich materials with honeycomb cores for each gear and have three parts:
- a main door, hydraulically actuated, is hinged to the fuselage keel beam parallel to the aircraft center line and can be closed with the gear in the extended or retracted position,
- a fairing attached to the gear leg (leg fixed fairing)): refer to ATA32 chapter,
- a small door hinged to the wing structure in the neighborhood of the upper end of the main leg (hinged door)): refer to ATA32 chapter.

All doors are part of the fuselage belly fairing and wing bottom surface in closed position.

G7508471 - G3NT1T0 - FM51DW000000001

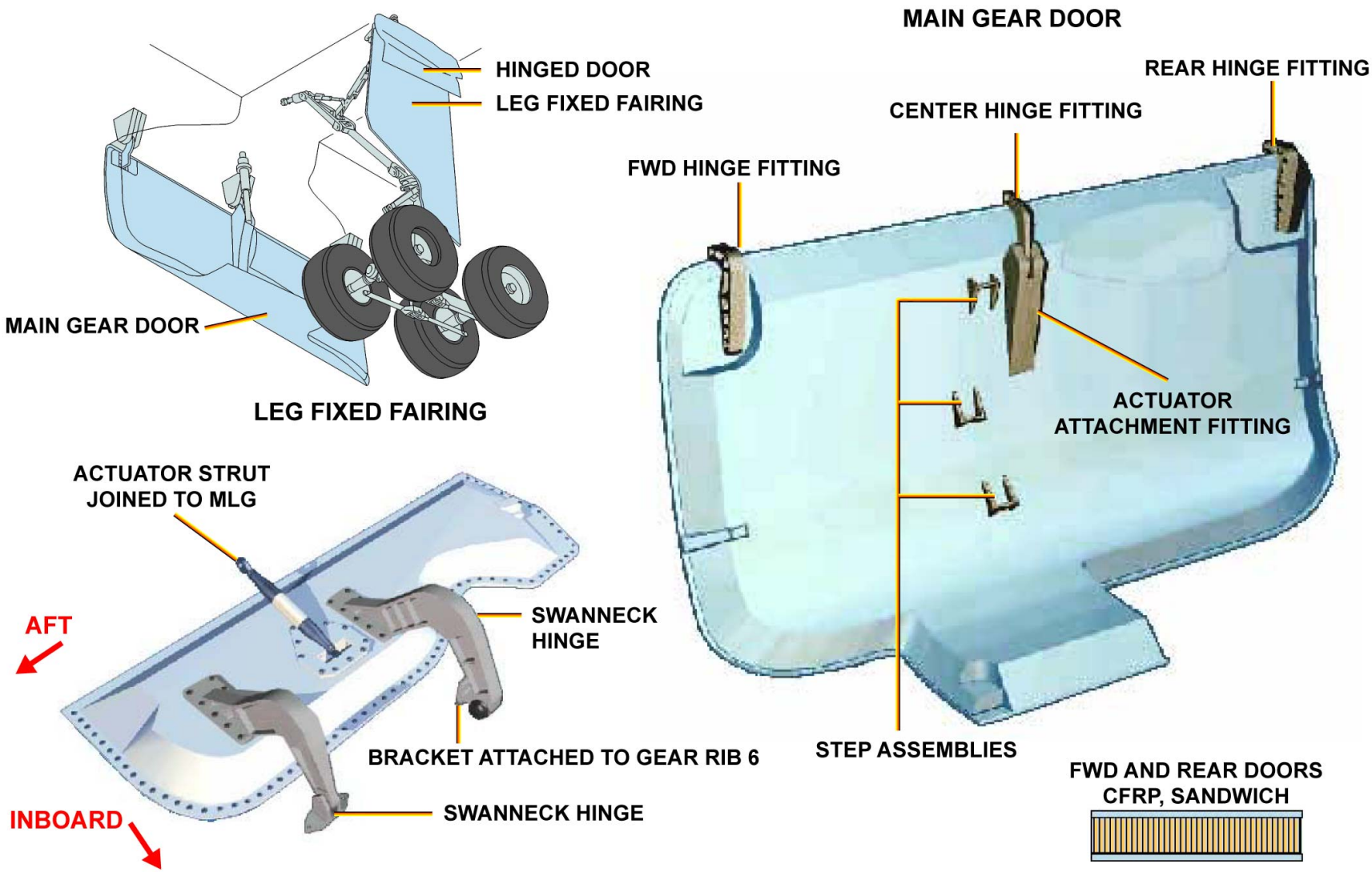

LANDING GEAR DOORS - MLG (MAIN LANDING GEAR)

G7508471 - G3NT1T0 - FM51DW000000001

FUSELAGE D/O (3)

GENERAL ARRANGEMENT

The fuselage is divided into five main parts:
- the nose forward fuselage (section 11/12),
- the forward fuselage (section 13/14 and 14A for A330-300/A340-300),
- the center fuselage (section 15),
- the rear fuselage (sections 16/17,18),
- And the cone/rear fuselage (section 19/19.1).

G7508471 - G3NT1T0 - FM51DX000000001

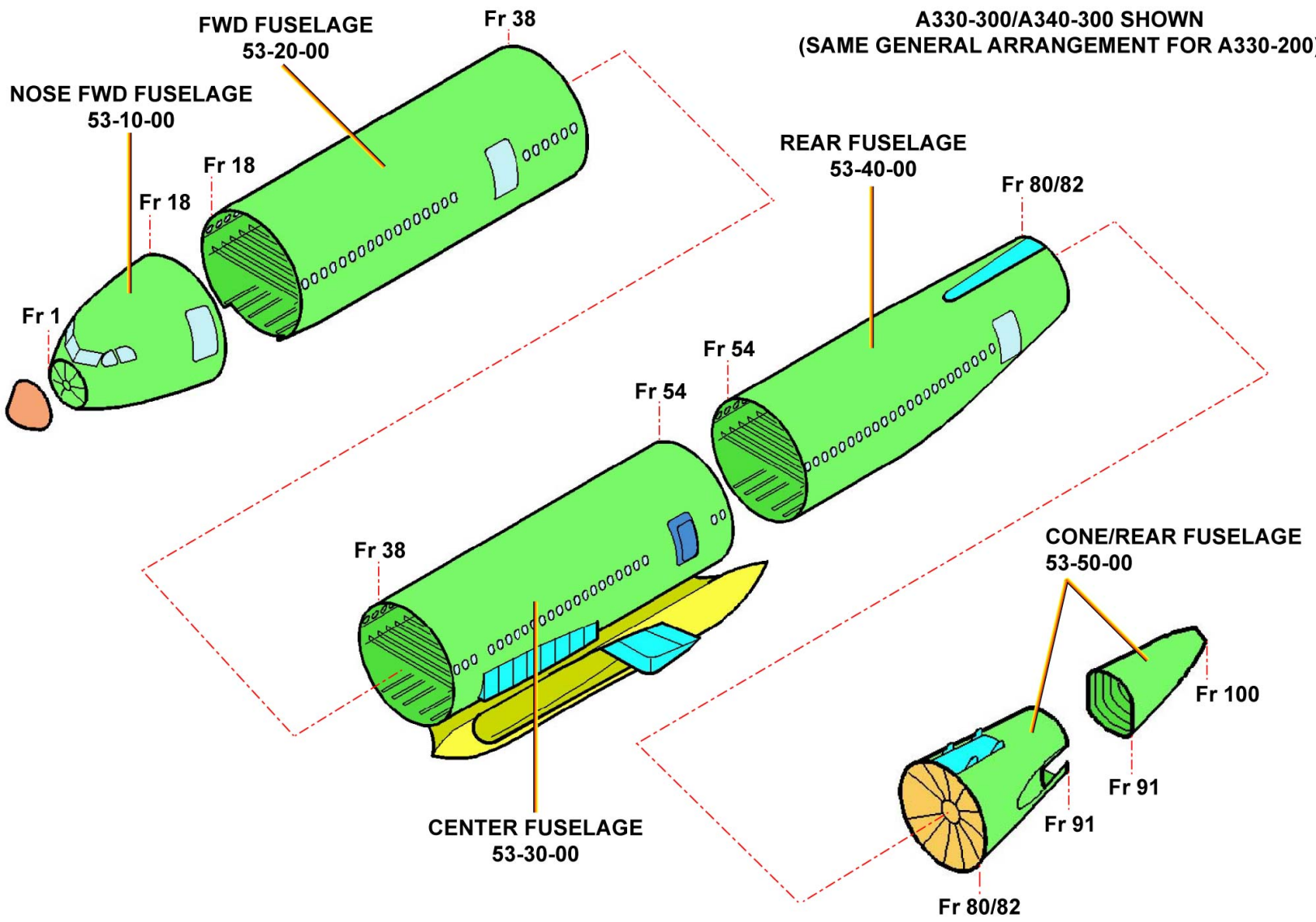

GENERAL ARRANGEMENT

G7508471 - G3NT1T0 - FM51DX000000001

FUSELAGE D/O (3)

NOSE FORWARD FUSELAGE

SECTION LAYOUT

The nose forward fuselage includes the section 11, between Frame (Fr) 1 and 10 and the section 12 between Fr 10 to Fr 18. The bottom skin panel extends up to Fr 19.
The main structure of the nose forward fuselage is divided into three parts:
- the forward upper structure (cockpit area) between Fr 1and Fr 10,
- the rear upper structure between Fr 10 and Fr 18,
- the lower structure between Fr 1and Fr 18.

The pressurized zone extends from Fr 1 to Fr 18. The unpressurized zones are the radome forward of Fr 1, the nose landing gear bay between Fr 10A and Fr 17 and the external power receptacle housing.

G7508471 - G3NT1T0 - FM51DX000000001

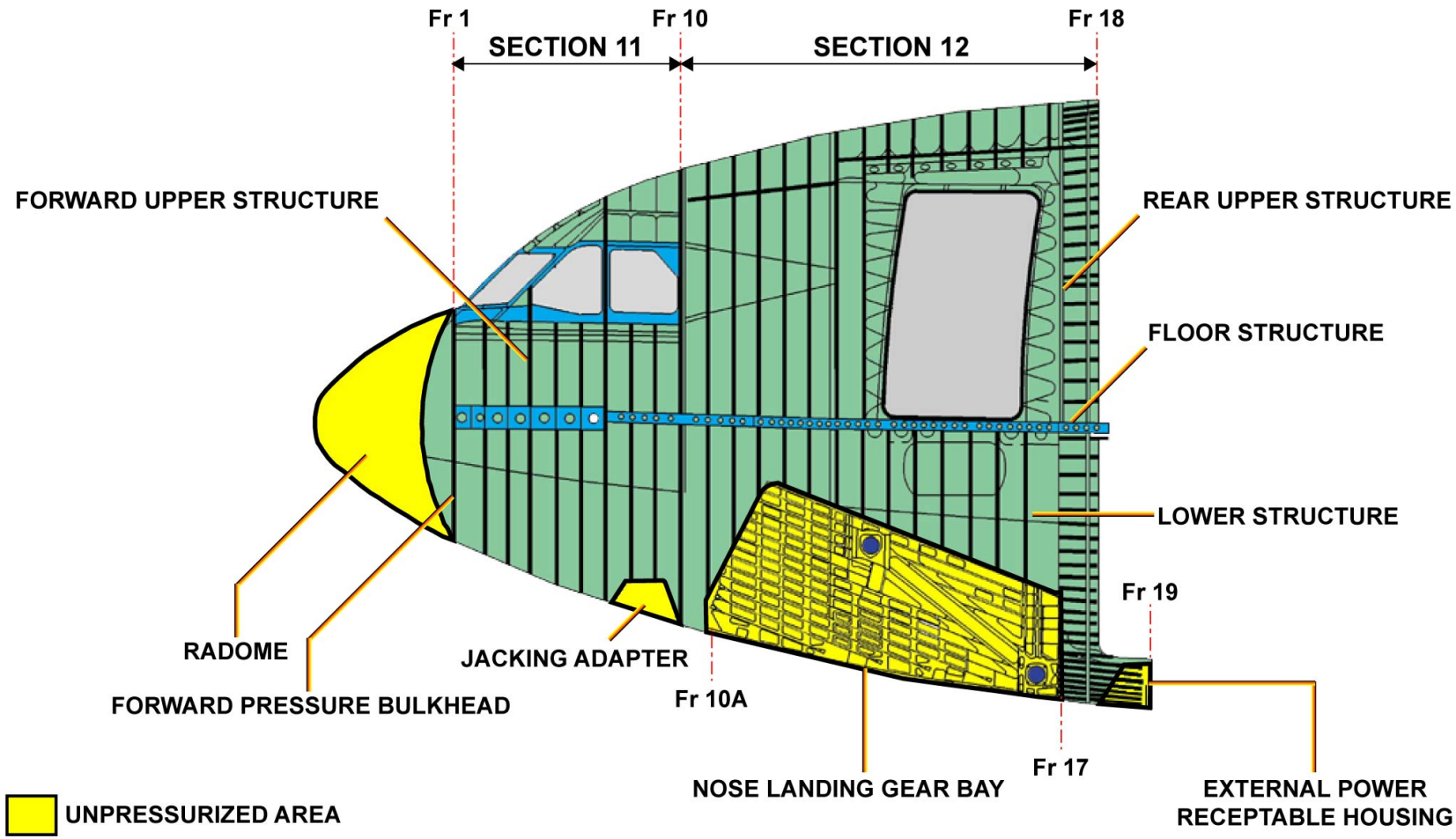

NOSE FORWARD FUSELAGE - SECTION LAYOUT

G7508471 - G3NT1T0 - FM51DX000000001

FUSELAGE D/O (3)

NOSE FORWARD FUSELAGE (continued)

FORWARD UPPER STRUCTURE

The forward upper structure between Fr 1 and Fr 10 includes:
- closed frames,
- opened frames at level of openings (windshield and side windows),
- the forward pressure bulkhead,
- the flight deck floor support structure,
- skin panels,
- the windshield structure.

The skin panels below and above the windshield are made of titanium alloy for bird impact protection.

G7508471 - G3NT1T0 - FM51DX000000001

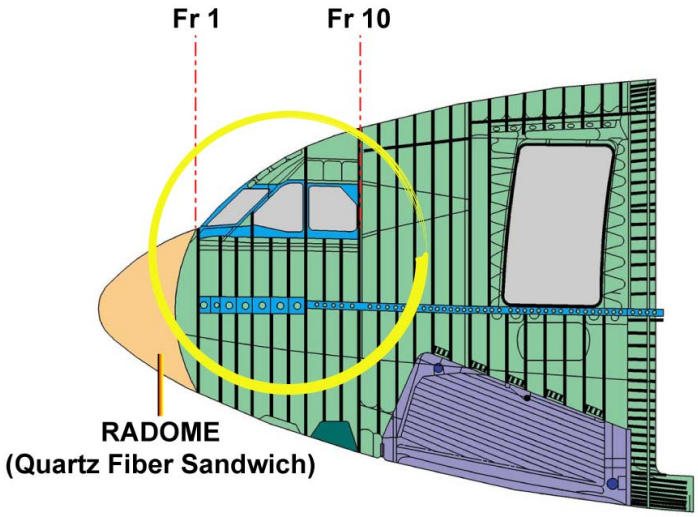

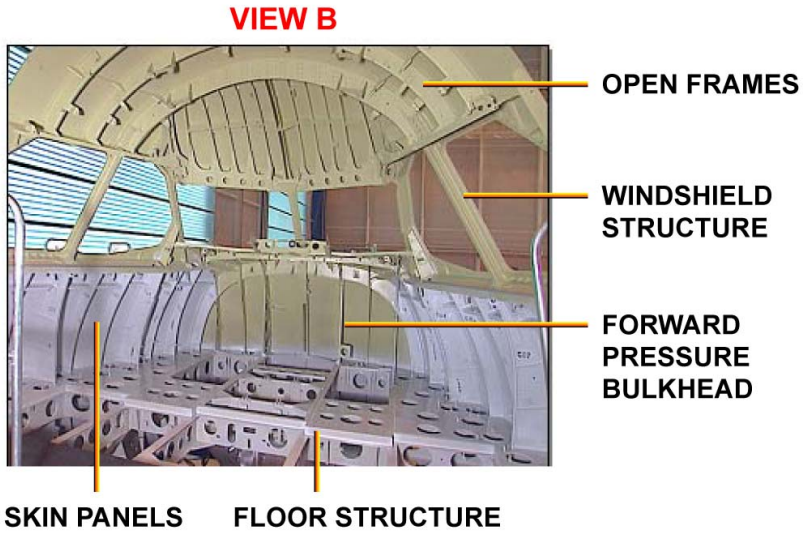

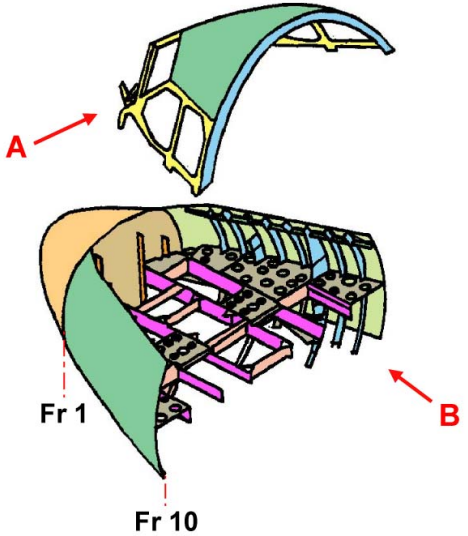

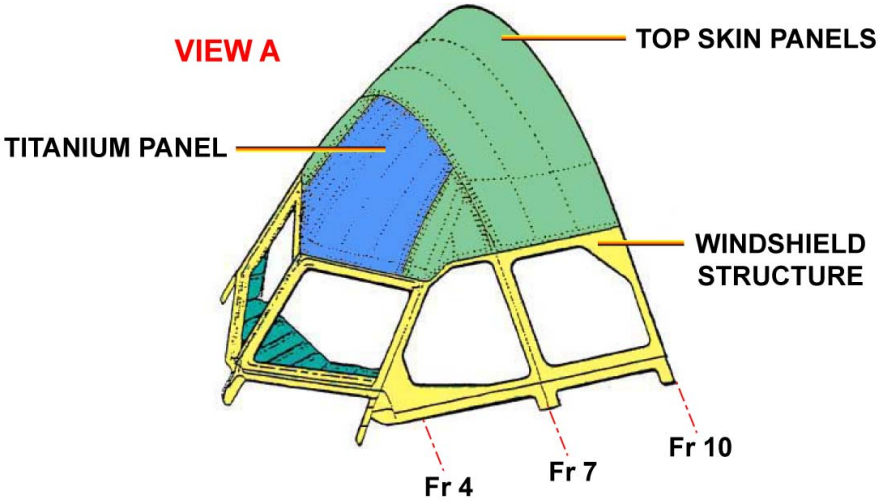

NOSE FORWARD FUSELAGE - FORWARD UPPER STRUCTURE

G7508471 - G3NT1T0 - FM51DX000000001

FUSELAGE D/O (3)

NOSE FORWARD FUSELAGE (continued)

REAR UPPER STRUCTURE

The upper structure between Fr 10 and Fr 18 is the forward part of the passenger cabin and includes:
- closed frames, stringers and skins,
- opened frames at level of opening for the passenger/crew door area,
- the passenger/crew door frame structure,
- the floor structure (including cross beams, seat rails and support rods connected to the nose landing gear bay).

G7508471 - G3NT1T0 - FM51DX000000001

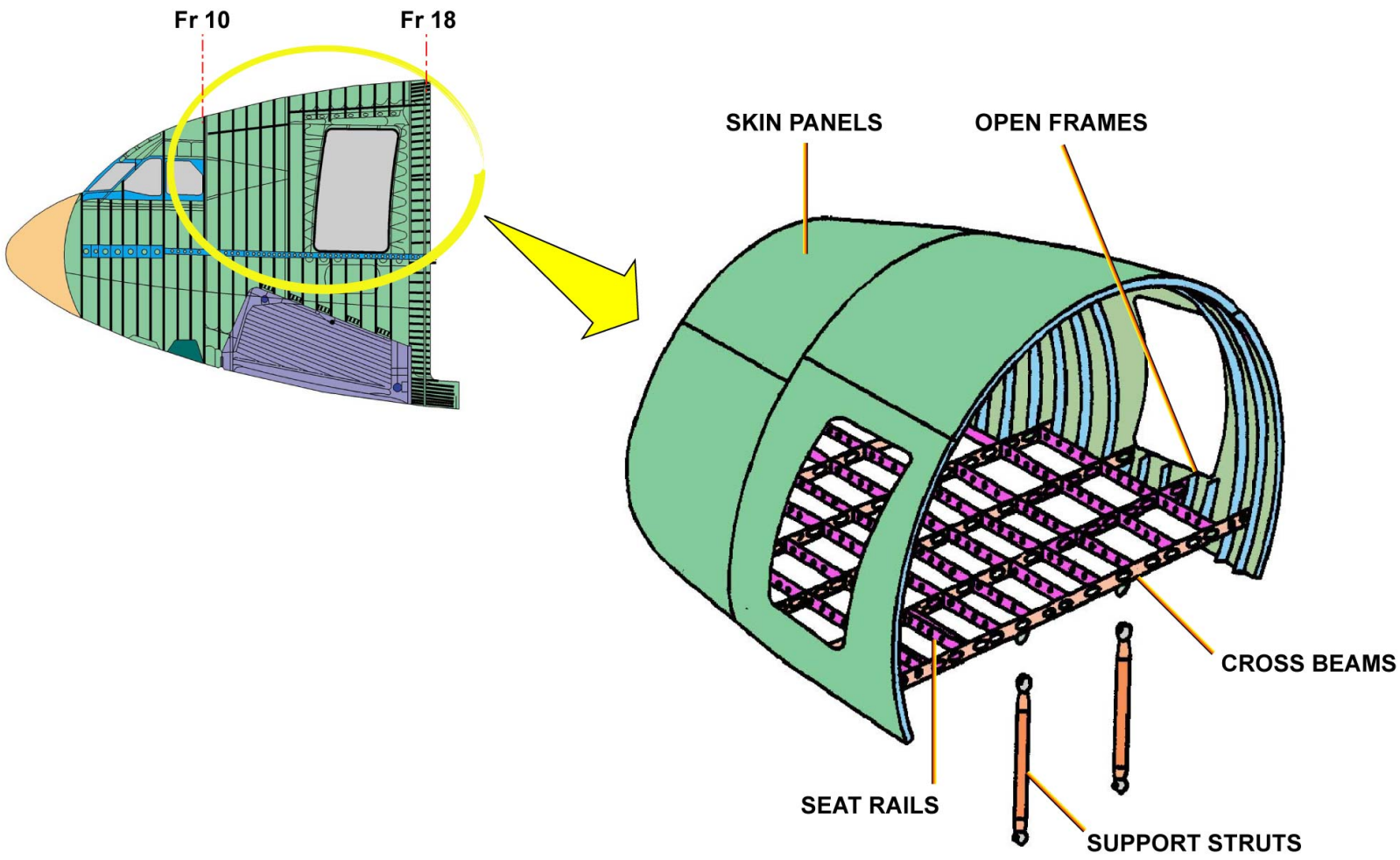

NOSE FORWARD FUSELAGE - REAR UPPER STRUCTURE

G7508471 - G3NT1T0 - FM51DX000000001

FUSELAGE D/O (3)

NOSE FORWARD FUSELAGE (continued)

LOWER STRUCTURE

The lower structure between Fr 1 and Fr 19 houses:
- the nose landing gear bay From Fr 10A to Fr 17,
- the jacking adapter located forward of Fr 10A,
- the avionics compartment access door,
- the external power receptacle housing.

The nose landing gear bay is an assembly of integrally machined panels stiffened by machined members, attached to the corresponding fuselage frames. The nose landing gear bay is reinforced by oblique struts at Fr 12A, 14 and 15A.

G7508471 - G3NT1T0 - FM51DX000000001

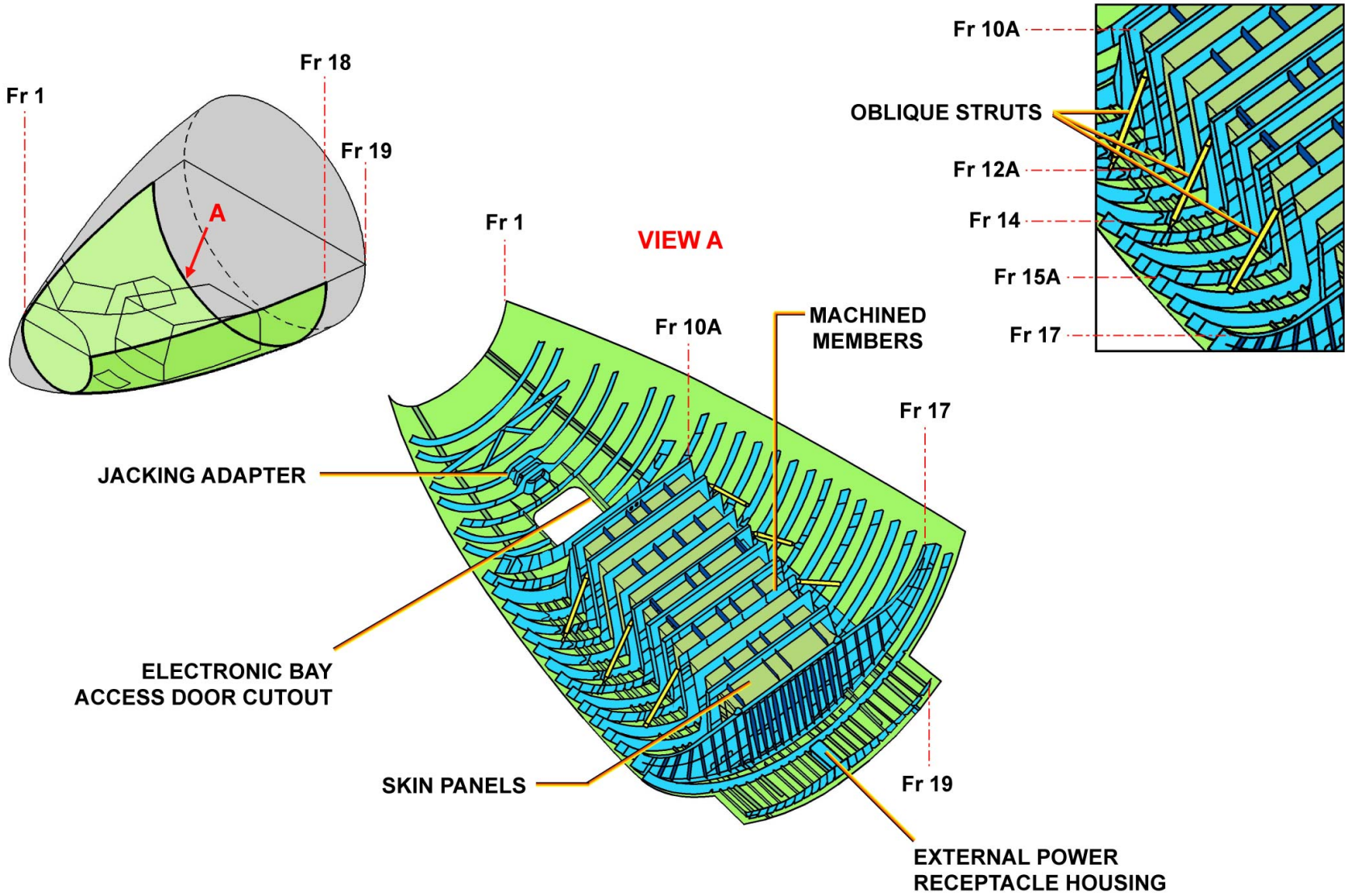

NOSE FORWARD FUSELAGE - LOWER STRUCTURE

G7508471 - G3NT1T0 - FM51DX000000001

FUSELAGE D/O (3)

FORWARD FUSELAGE

SECTION LAYOUT

The forward fuselage is divided into two main sections (13 and 14).
The A330-300 and A340-300 have an additional section 14A.
- section 13 extends between Fr 18 and 26,
- section 14 extends between Fr 26 and 38 for the A330-200,
- section 14 extends between Fr 26 and 37.1 for the A330-300.

The frame numbering of section 14 differs between the A330-200 and the A330-300/A340-300. The section 14A extends between Fr 37.1 and 38 and contains five frame bays.

G7508471 - G3NT1T0 - FM51DX000000001

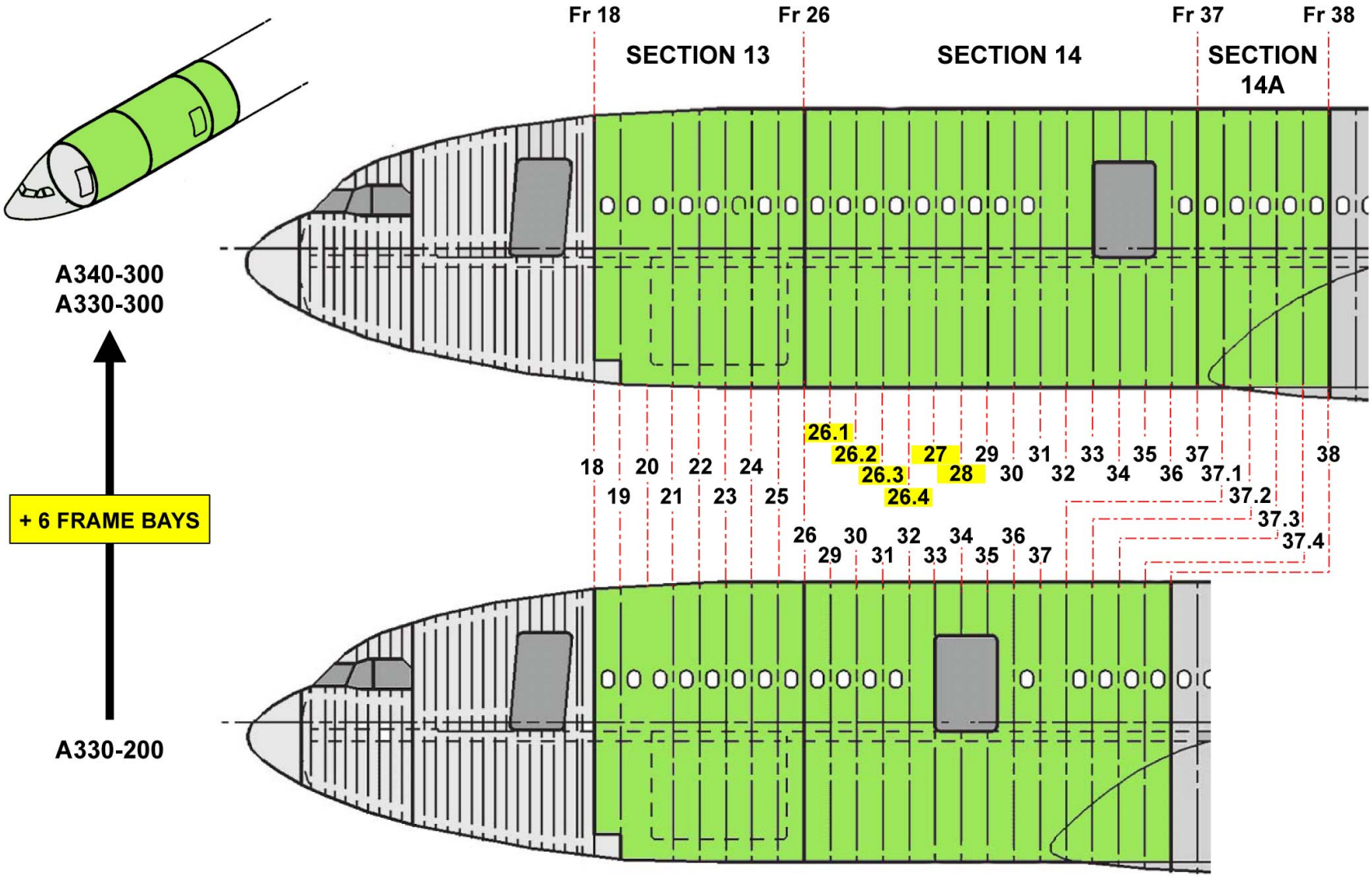

FORWARD FUSELAGE - SECTION LAYOUT

G7508471 - G3NT1T0 - FM51DX000000001

FUSELAGE D/O (3)

FORWARD FUSELAGE (continued)

TYPICAL FUSELAGE STRUCTURE

The structure is of conventional aluminum alloy design with skin panels, frames and stringers. The cabin floor structure has a floor panels supported by seat rails and cross beams. The floor structure of the cargo compartment has crossbeams attached to the frames and supported by struts. The roller tracks are attached to the crossbeams. The carbon fiber struts, which are supporting the cabin floor structure, are attached to the crossbeams and to the frames.

G7508471 - G3NT1T0 - FM51DX000000001

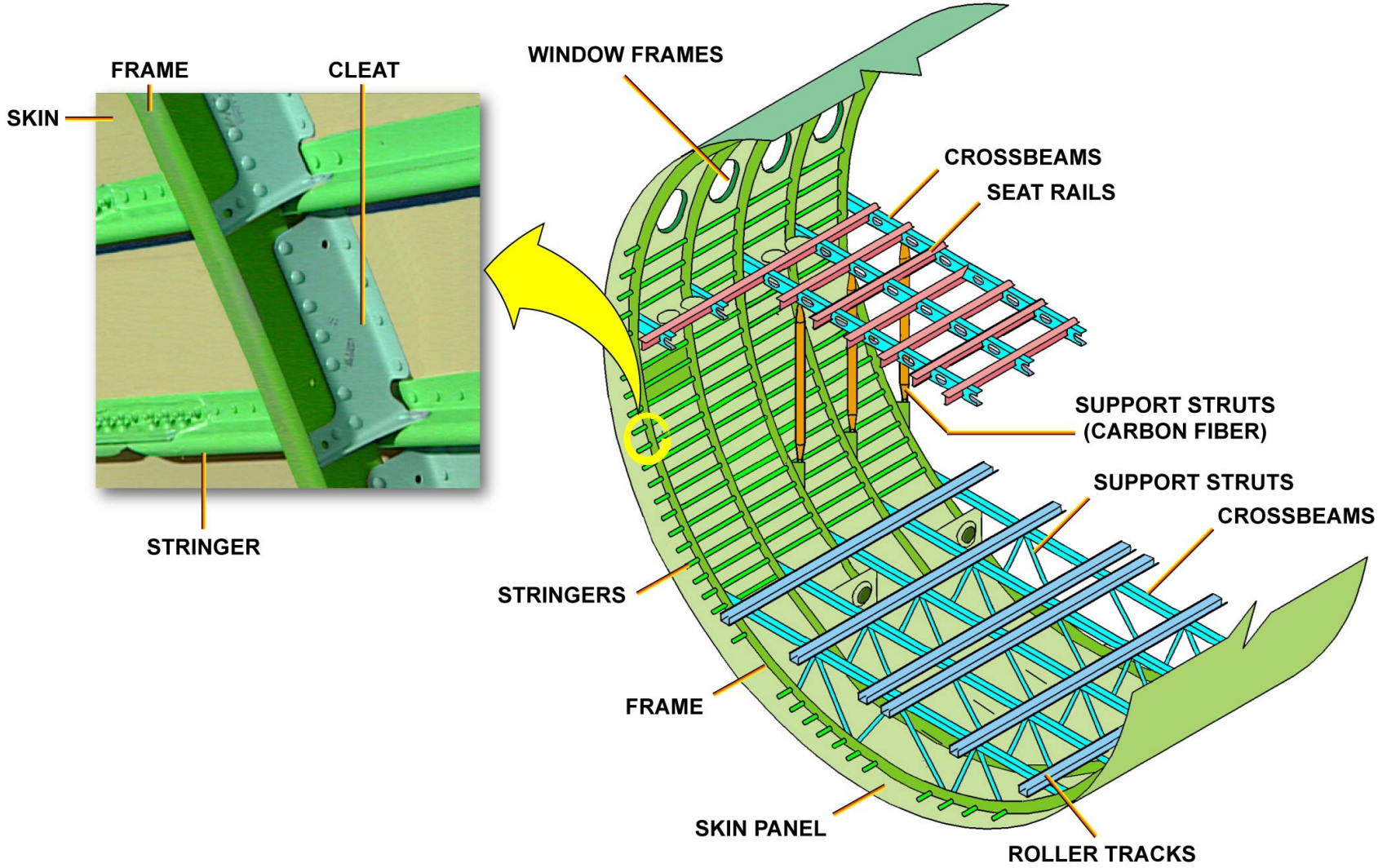

FORWARD FUSELAGE - TYPICAL FUSELAGE STRUCTURE

G7508471 - G3NT1T0 - FM51DX000000001

FUSELAGE D/O (3)

FORWARD FUSELAGE (continued)

LONGITUDINAL SKIN JOINTS

The longitudinal joints are generally longitudinal lap joints with three rivet - row joints.
As the skin is, in most areas, 1.6 thick, it is reinforced by bonded doubler straps of at least 0.6 mm to allow countersunk riveting. For chemical milled skins the maximum thickness is at least 2.2 mm in the joint areas.
In addition, at each intersection of frames and lap joints, a 1 mm titanium alloy strap has been added to provide good damage tolerance capabilities.

G7508471 - G3NT1T0 - FM51DX000000001

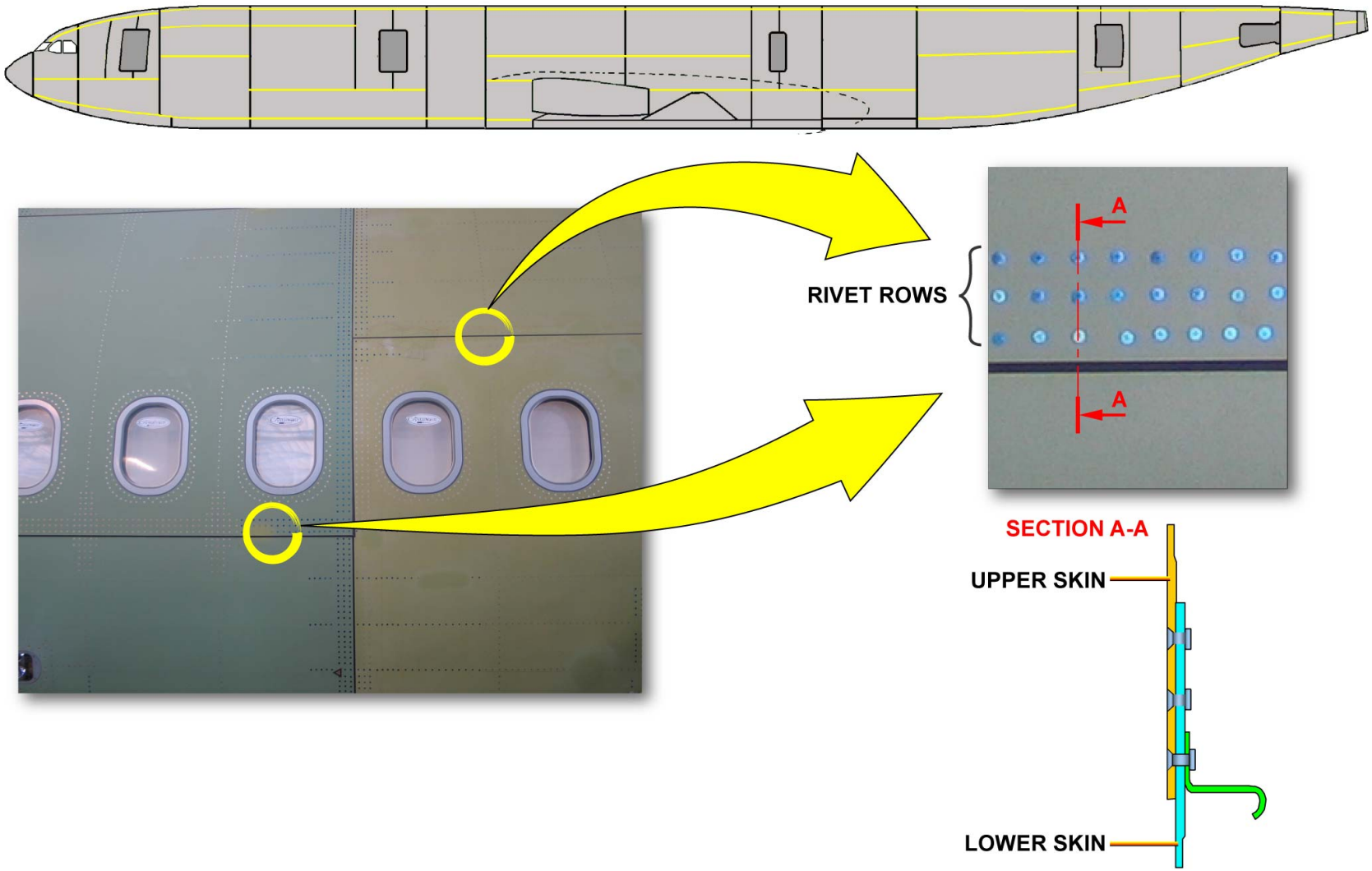

FORWARD FUSELAGE - LONGITUDINAL SKIN JOINTS

G7508471 - G3NT1T0 - FM51DX000000001

FUSELAGE D/O (3)

FORWARD FUSELAGE (continued)

CIRCUMFERENTIAL SKIN JOINTS

At the typical joints the skin panels are connected by a circumferential strap and three rivet rows. The stringers are coupled by joint pieces. In the region of the circumferential joints all stringers are riveted to the skin.

The panels of the lower skin joints of section 15 and 16 are milled such that they will overlap each other after being riveted. The joint is supported by a frame, which has a T-shaped cross section. The stringers are connected with a milled stringer joint fitting.

G7508471 - G3NT1T0 - FM51DX000000001

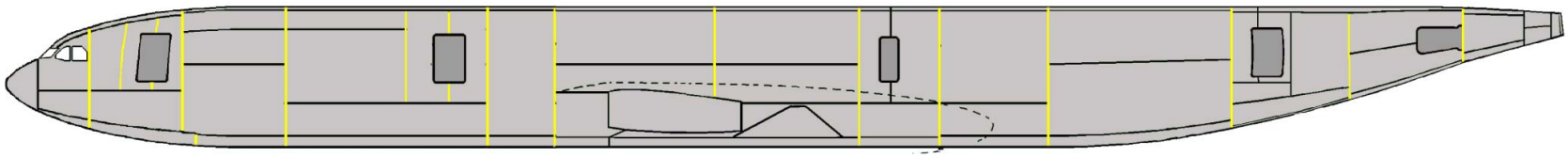

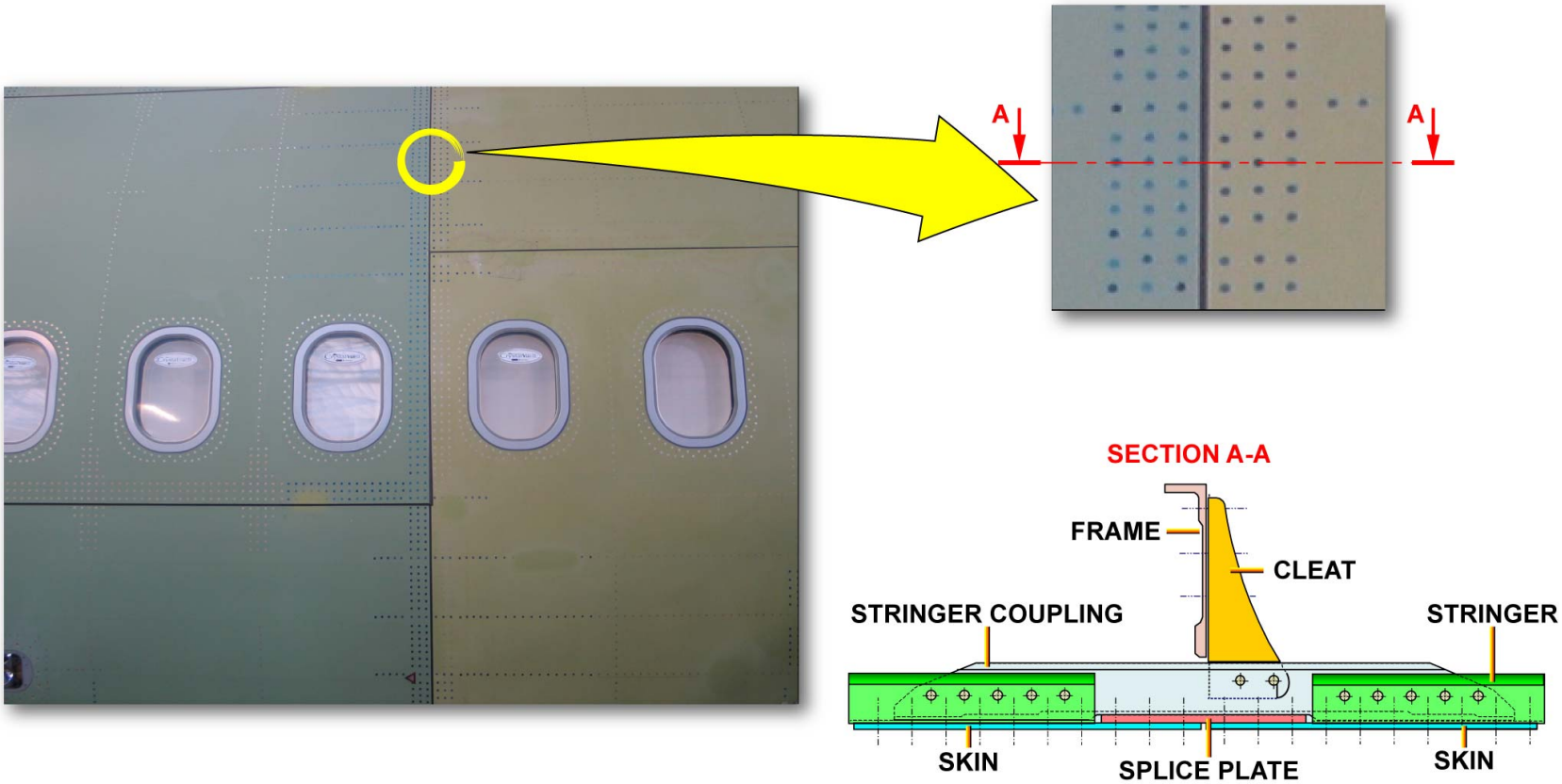

FORWARD FUSELAGE - CIRCUMFERENTIAL SKIN JOINTS

G7508471 - G3NT1T0 - FM51DX000000001

FUSELAGE D/O (3)

CENTER FUSELAGE

SECTION LAYOUT

The center fuselage (section 15) extends from Fr 38 to 54. It includes the emergency exit doors. The pressurized zones extend from Fr 38 to 54 in the upper fuselage, and from Fr 38 to 40 and Fr 53.2 to 54 in the lower fuselage. The unpressurized zones extend from Fr 40 to 53.2 in the lower fuselage.

The fuselage upper section (from Fr 38 to 54) is composed of:

- frames, stringers, emergency exit frames, skin panels and floor support structure.

The fuselage lower section includes:

- the center wing box, which includes a forward pressure bulkhead (Fr 40) and the floor support structure,
- the keel beam between Fr 40 and Fr 46/53.3,
- the rear pressure bulkhead shaped by the lower member of frame 53.2,
- the horizontal pressure floor extending from the center wing box, Fr 47 to 53.2, with longitudinal beams and a cabin floor support structure,
- lateral pressure floors extending from Fr 47 to 53.2,
- the forward lower fuselage between Fr 38 and 40,
- the aft lower fuselage between Fr 53.2 and 54.

G7508471 - G3NT1T0 - FM51DX000000001

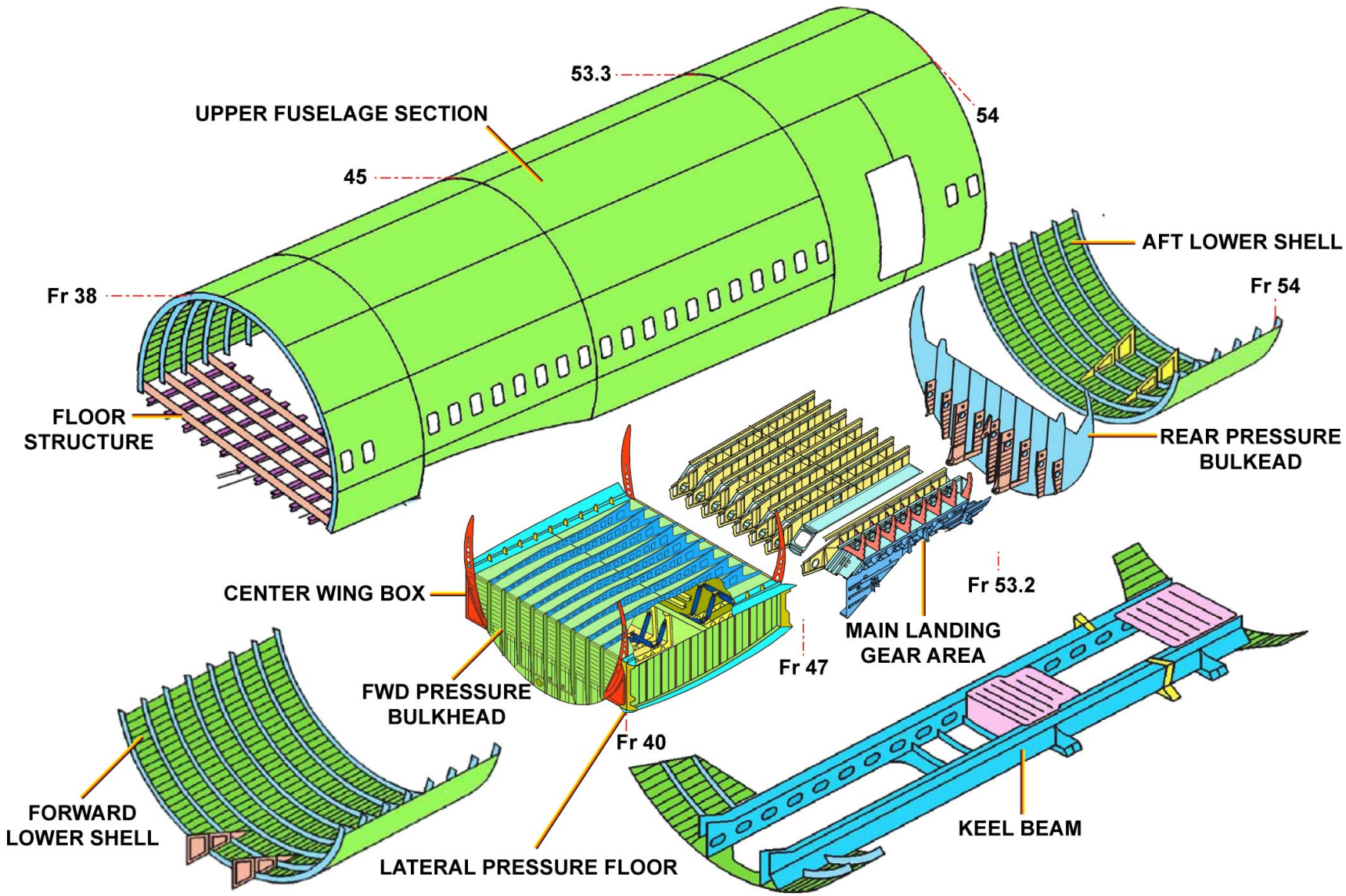

CENTER FUSELAGE - SECTION LAYOUT

G7508471 - G3NT1T0 - FM51DX000000001

FUSELAGE D/O (3)

CENTER FUSELAGE (continued)

BELLY FAIRING

The belly fairing extends between Fr 37.2 and 57.2.
It includes a sub-structure made of aluminum alloy frames and webs, which are attached to the fuselage via fittings and rods.
This substructure supports the sandwich panels made of composite materials (carbon and glass fiber).
The belly fairing also includes the landing gear doors, external access panels and access doors for maintenance.

G7508471 - G3NT1T0 - FM51DX000000001

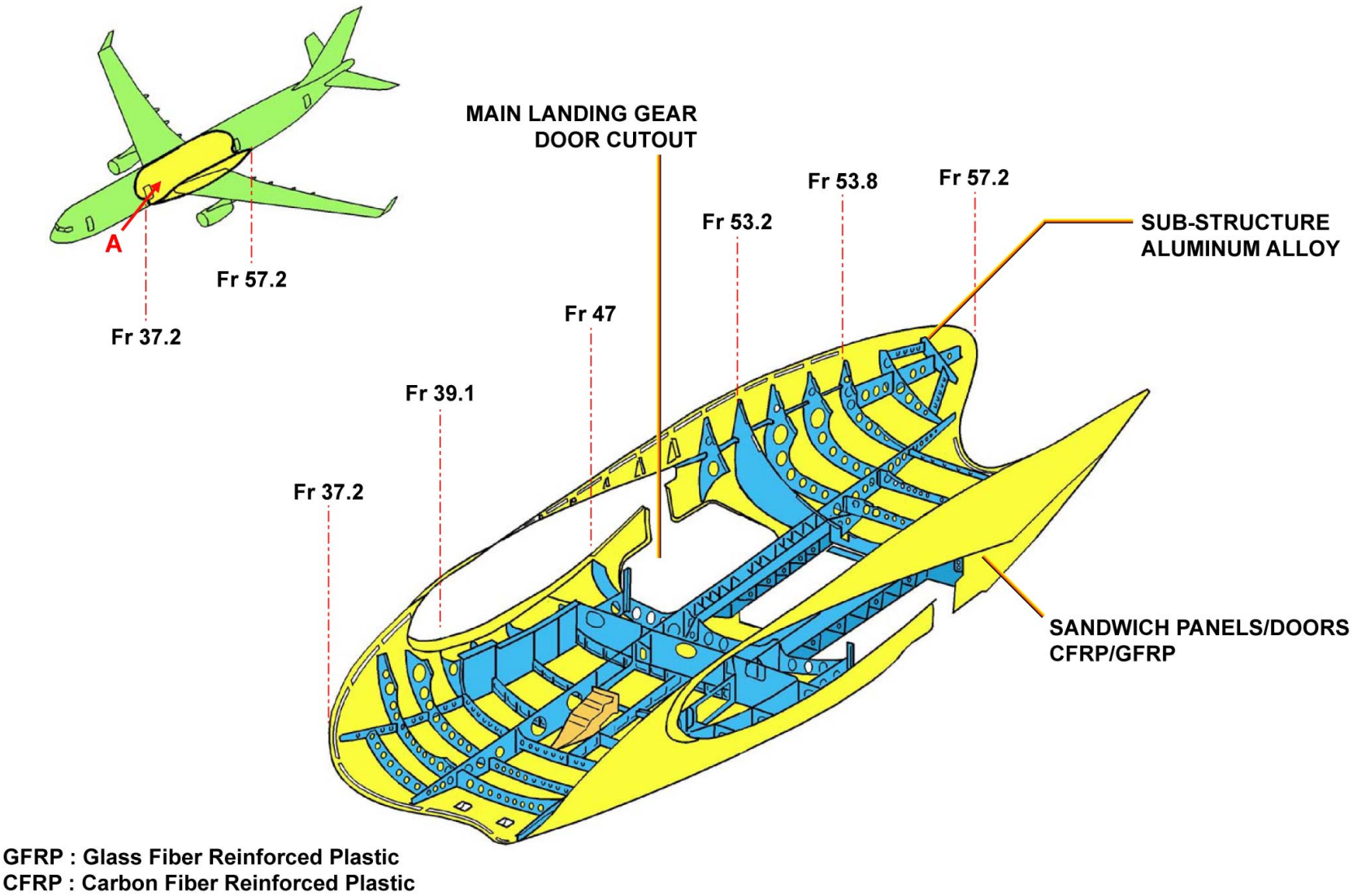

CENTER FUSELAGE - BELLY FAIRING

G7508471 - G3NT1T0 - FM51DX000000001

FUSELAGE D/O (3)

REAR FUSELAGE - SECTION LAYOUT

The rear fuselage assembly is a pressurized area, which extends from Fr 54 to Fr 80/82 and contains sections 16, 17 and 18.
The section 16 of the A330-300 and A340-300 is 4 frame bays longer than the A330-200, and extends from Fr 54 to Fr 58.
Section 17 extends from Fr 58 to Fr 72 and section 18 extends from Fr 72 to Fr 80/82.
The structure of this section is of the same basic design as the forward fuselage.
The lower part of the fuselage assembly contains the rear cargo compartment and the rear cargo-compartment door, installed on the right hand side of the fuselage between Fr 59 and 65. This section is also fitted with a bulk cargo compartment and a bulk cargo door, installed on the right hand side of the fuselage between Fr 67 and 69.

G7508471 - G3NT1T0 - FM51DX000000001

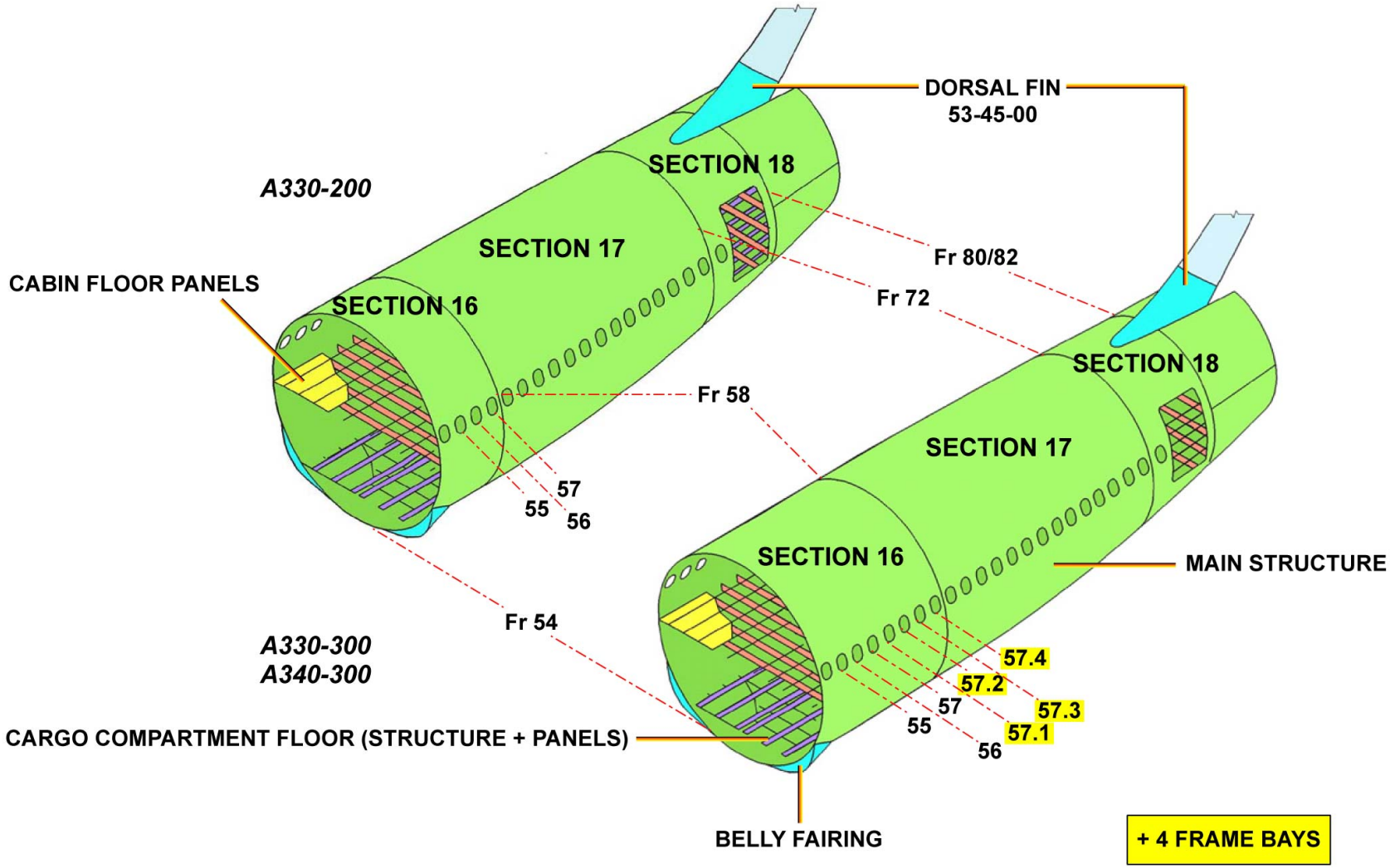

REAR FUSELAGE - SECTION LAYOUT

G7508471 - G3NT1T0 - FM51DX000000001

FUSELAGE D/O (3)

CONE/REAR FUSELAGE

The cone/rear fuselage assembly is an unpressurized area, which extends from Fr 80/82 to Fr 103. The upper skin panels aft of Fr 76 are also part of the assembly. Section 19, located between Fr 80 / 82 and 91, contains the rear pressure bulkhead installed at Fr 80 / 82, the attachment fittings for the vertical stabilizer, the attachment structure for the horizontal stabilizer and attachment fittings for the tail cone at Fr 91. The tail cone extends from Fr 92 to Fr 103.

G7508471 - G3NT1T0 - FM51DX000000001

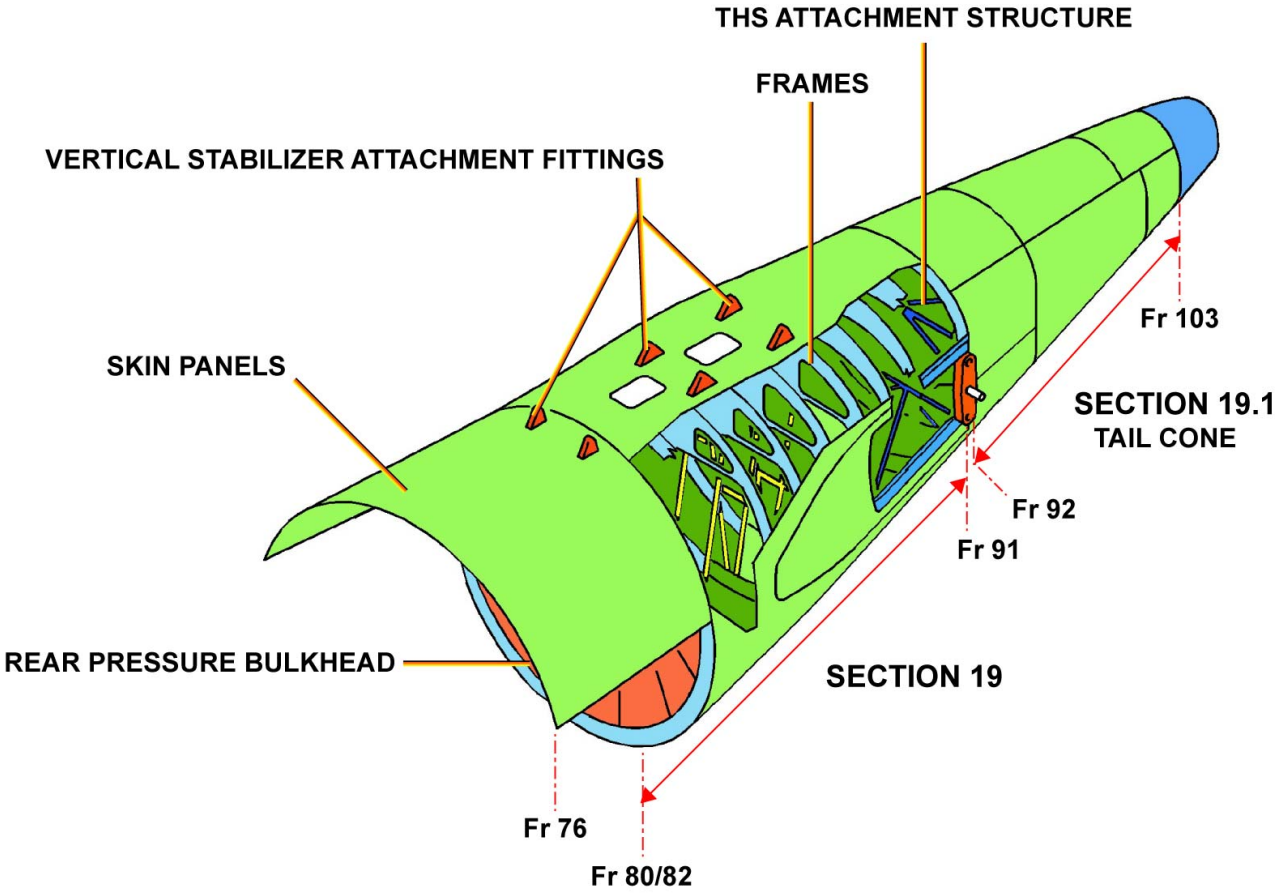

CONE/REAR FUSELAGE

G7508471 - G3NT1T0 - FM51DX000000001

FUSELAGE D/O (3)

CONE/REAR FUSELAGE (continued)

REAR PRESSURE BULKHEAD

The rear pressure bulkhead, installed at Fr 80/82,divides the pressurized rear fuselage from the cone / rear fuselage, which is not pressurized. It is a monolithic composite panel, made from carbon fiber and stiffened by nine stiffeners integrated to the front face (carbon fiber skin laminated on a foam core). The bulkhead is attached to the inside of the fuselage with 12 titanium rim angles.

G7508471 - G3NT1T0 - FM51DX000000001

REAR PRESSURE BULKHEAD
(VIEW FROM UNPRESSURIZED AREA)

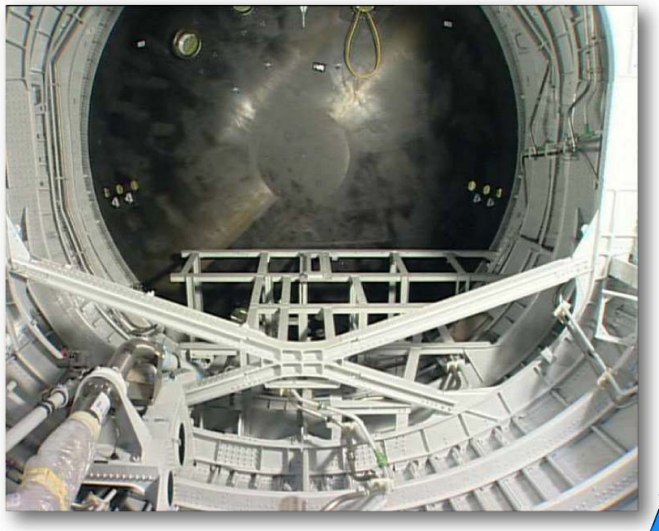

REAR PRESSURE BULKHEAD
(VIEW FROM PRESSURIZED AREA)

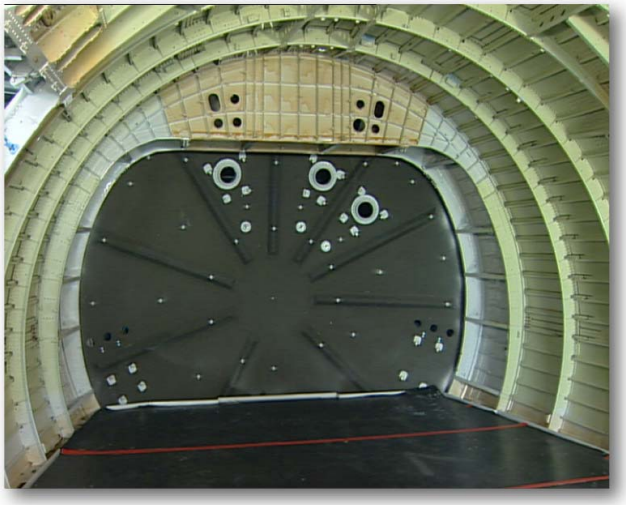

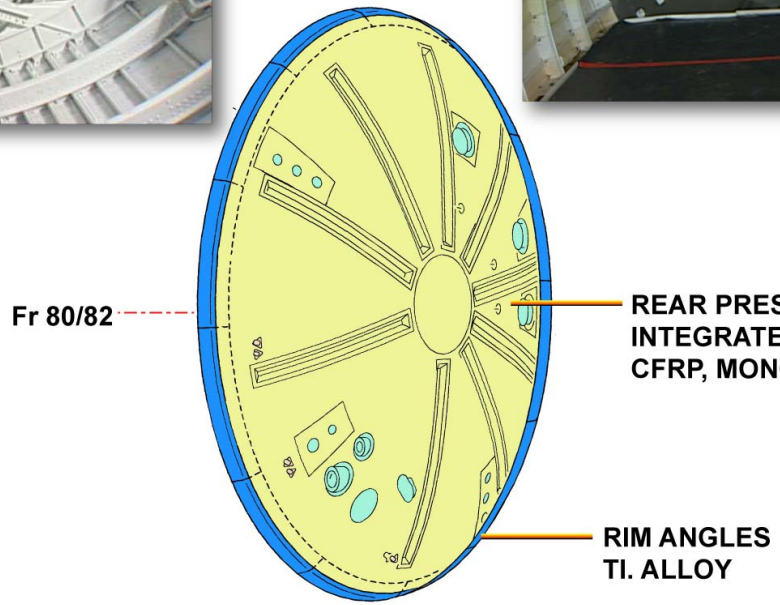

CFRP : Carbon Fiber Reinforced Plastic

CONE/REAR FUSELAGE - REAR PRESSURE BULKHEAD

FUSELAGE D/O (3)

CONE/REAR FUSELAGE (continued)

VERTICAL STABILIZER ATTACHMENT FITTINGS

The vertical stabilizer attachment fittings are machined from aluminum alloy forgings.

G7508471 - G3NT1T0 - FM51DX000000001

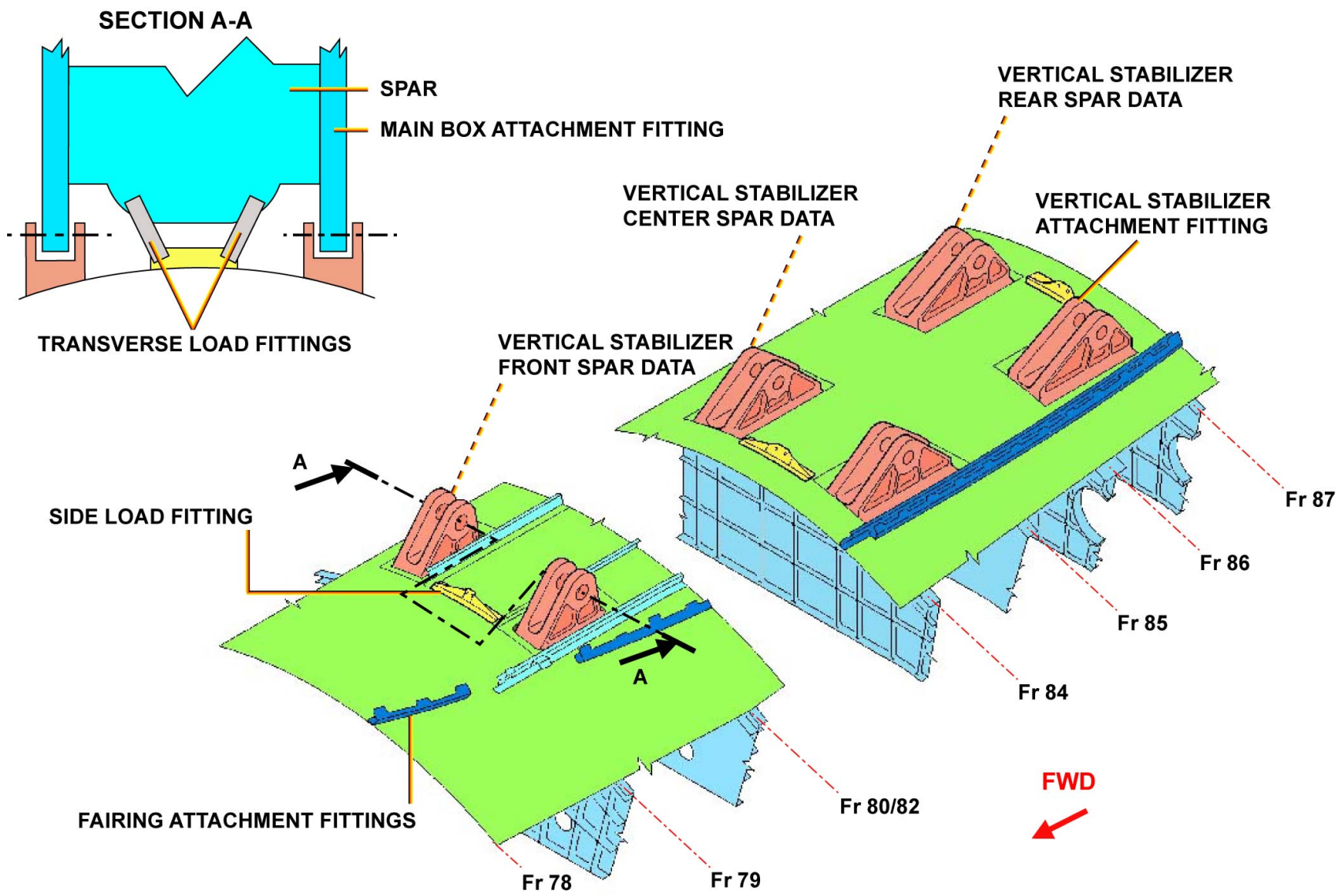

CONE/REAR FUSELAGE - VERTICAL STABILIZER ATTACHMENT FITTINGS

G7508471 - G3NT1T0 - FM51DX000000001

FUSELAGE D/O (3)

CONE/REAR FUSELAGE (continued)

THS ATTACHMENT FITTINGS

Attachment lugs for the THS rear attachment fittings are installed on the left and right sides of the upper and lower frame sections of frame 91. The upper and lower parts of frame 91 are integrally machined from aluminum alloy.

G7508471 - G3NT1T0 - FM51DX000000001

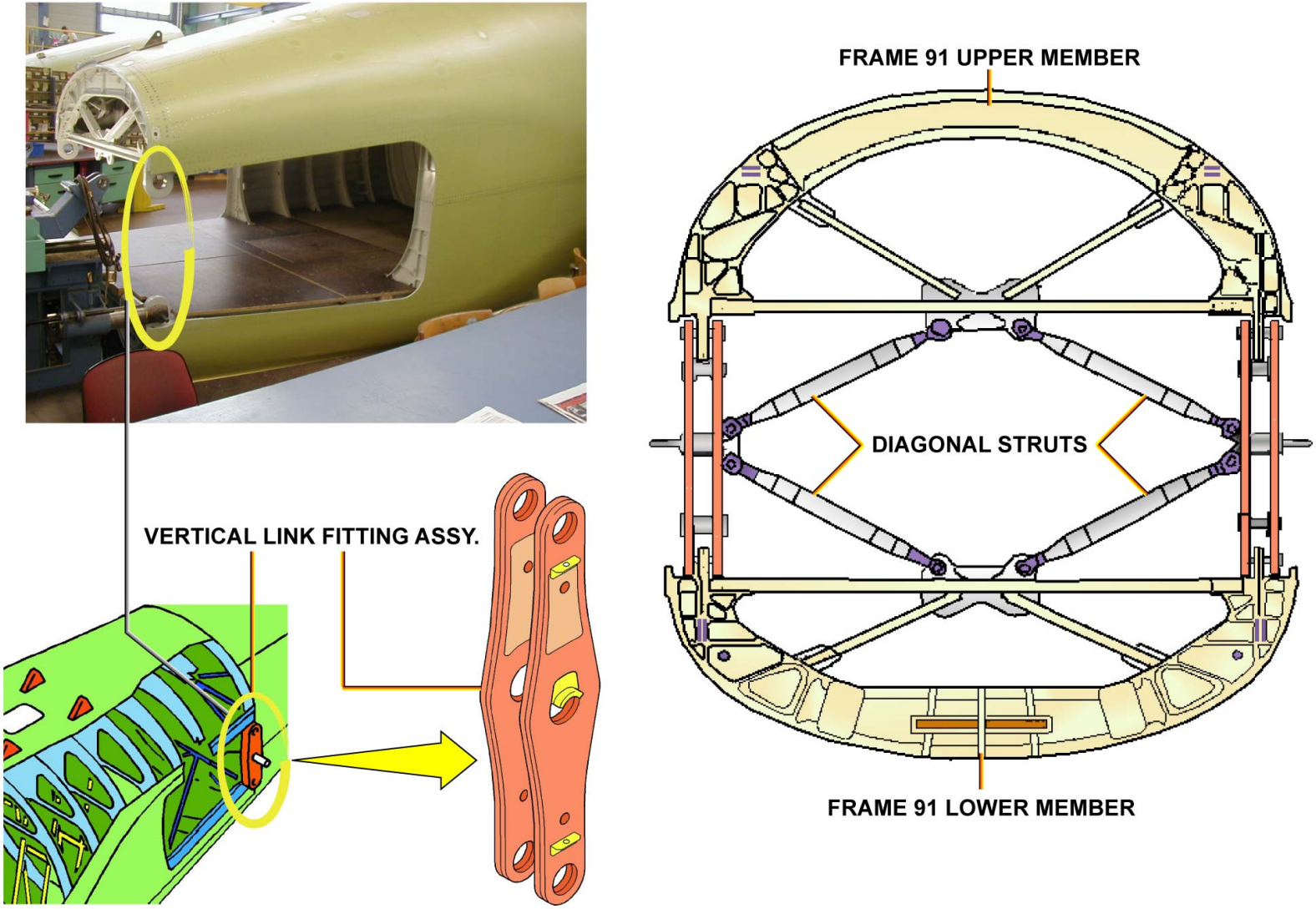

CONE/REAR FUSELAGE - THS ATTACHMENT FITTINGS

G7508471 - G3NT1T0 - FM51DX000000001

FUSELAGE D/O (3)

CONE/REAR FUSELAGE (continued)

TAIL CONE (SECTION 19.1)

The tail cone is attached to the cone/rear fuselage at Fr 91. You can remove the tail cone as a unit. The APU is installed in the tail cone (APU compartment) between Fr 95 and 101. The APU air intake is installed between Fr 92 and 95. The rear end of the tail cone, aft of Fr 103, is a sheet metal fairing for the APU exhaust.

G7508471 - G3NT1T0 - FM51DX000000001

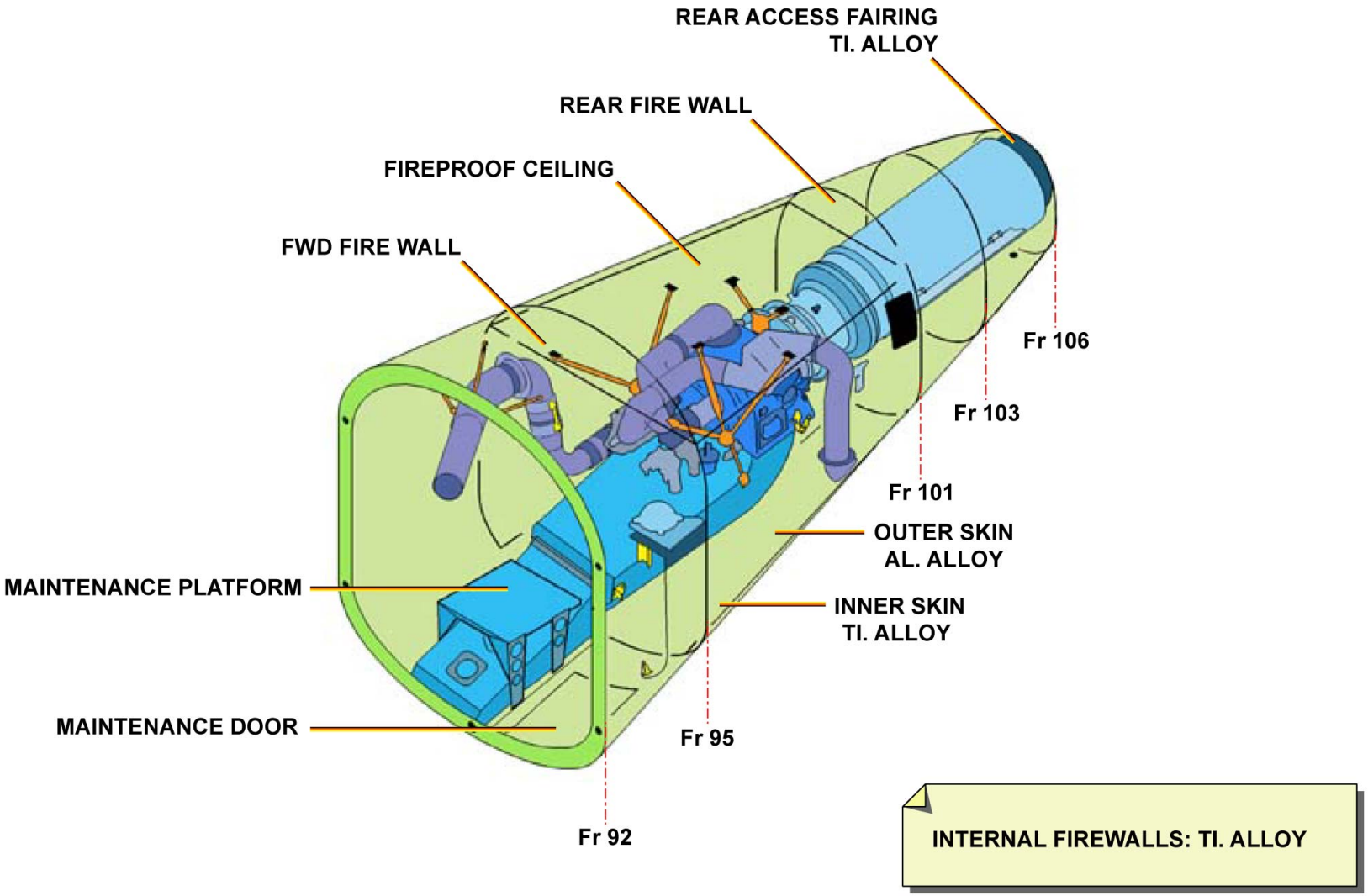

CONE/REAR FUSELAGE - TAIL CONE (SECTION 19.1)

G7508471 - G3NT1T0 - FM51DX000000001

PYLONS/NACELLES D/O (3)

PYLONS - GENERAL ARRANGEMENT

The pylon has:
- a primary structure attached to the wing and supporting the engine,
- a secondary structure, essentially fairings, housing most of the systems and having an aerodynamic profile.

G7508471 - G3NT1T0 - FM51DY000000001

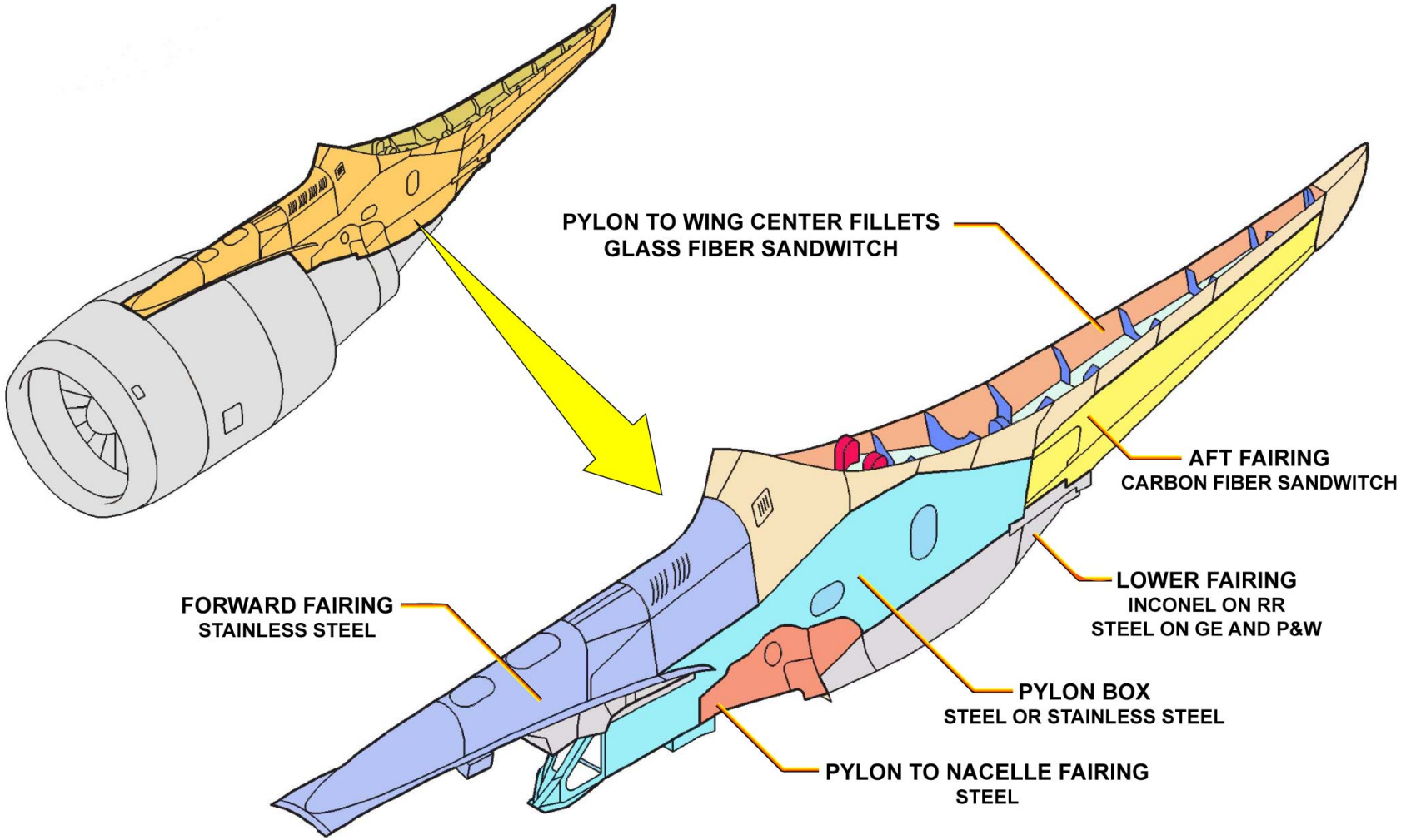

PYLONS - GENERAL ARRANGEMENT

G7508471 - G3NT1T0 - FM51DY000000001

PYLONS/NACELLES D/O (3)

PYLONS PRIMARY STRUCTURE - PYLON BOX

GENERAL ARRANGEMENT

The pylon box is the primary structure. It supports the engine through two points and it is attached to the wing at two points. It transmits the engine thrust to the aircraft.

G7508471 - G3NT1T0 - FM51DY000000001

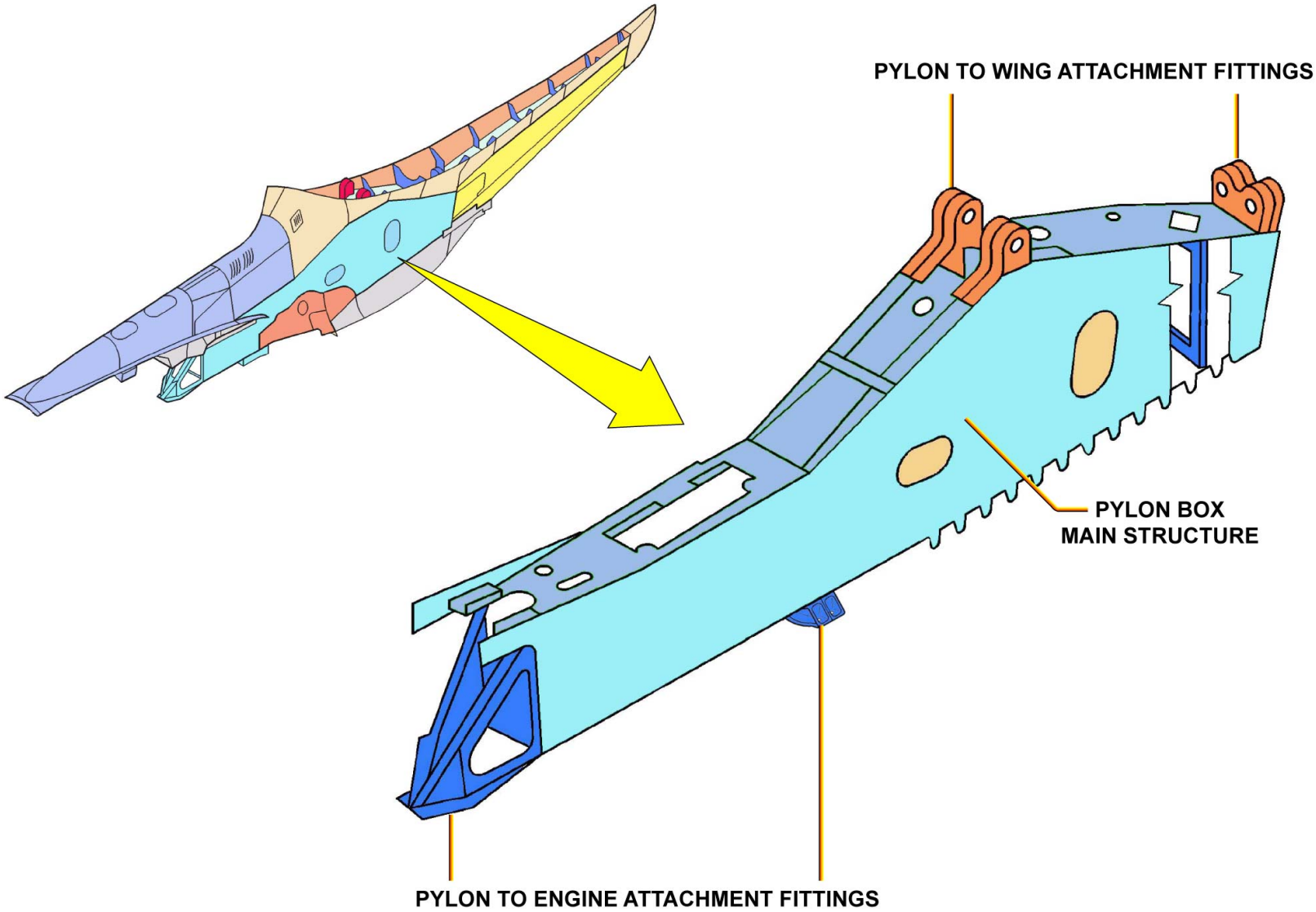

PYLONS PRIMARY STRUCTURE - PYLON BOX - GENERAL ARRANGEMENT

G7508471 - G3NT1T0 - FM51DY000000001

PYLONS/NACELLES D/O (3)

PYLONS PRIMARY STRUCTURE - PYLON BOX (continued)

MAIN ASSEMBLY

The pylon box is composed of ribs, spars and panels, mainly made from steel.

G7508471 - G3NT1T0 - FM51DY000000001

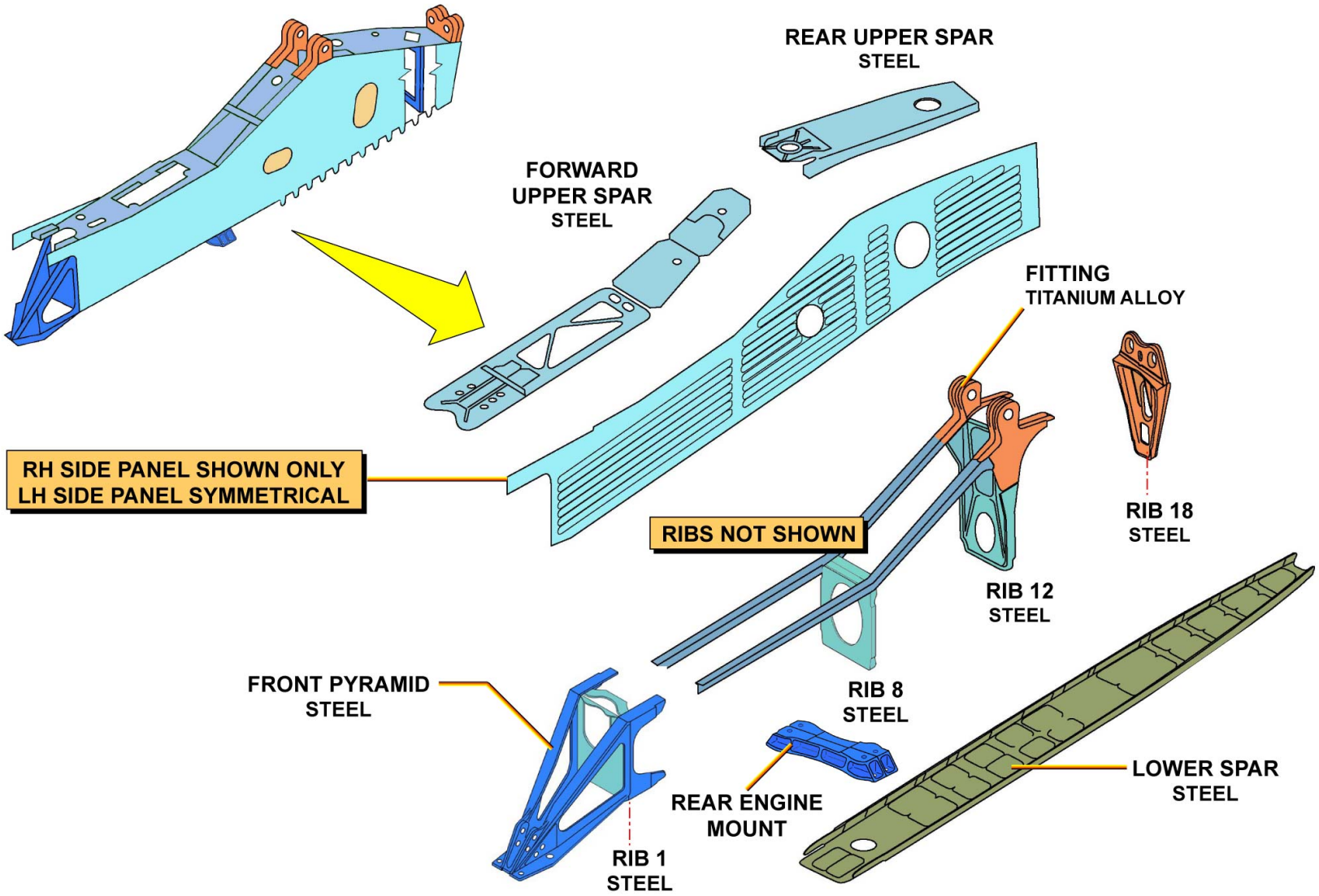

PYLONS PRIMARY STRUCTURE - PYLON BOX - MAIN ASSEMBLY

G7508471 - G3NT1T0 - FM51DY000000001

PYLONS/NACELLES D/O (3)

PYLONS PRIMARY STRUCTURE - PYLON BOX (continued)

PYLON TO WING ATTACHMENT

The forward attachment transmits vertical loads. It has inner and outer double lugged fork (made of titanium alloy) attachments at Rib 12, each having four shackles made of high tensile stainless steel. Immediately behind the forward attachment, a spherical bearing transmits the longitudinal and lateral loads to a spigot (thrust fitting, made from titanium, fail safe) bolted through the lower wing skin (engine thrust). The aft attachment is composed of Rib 18 fail safe lugs made of stainless steel, and four shackles made of titanium alloy.

G7508471 - G3NT1T0 - FM51DY000000001

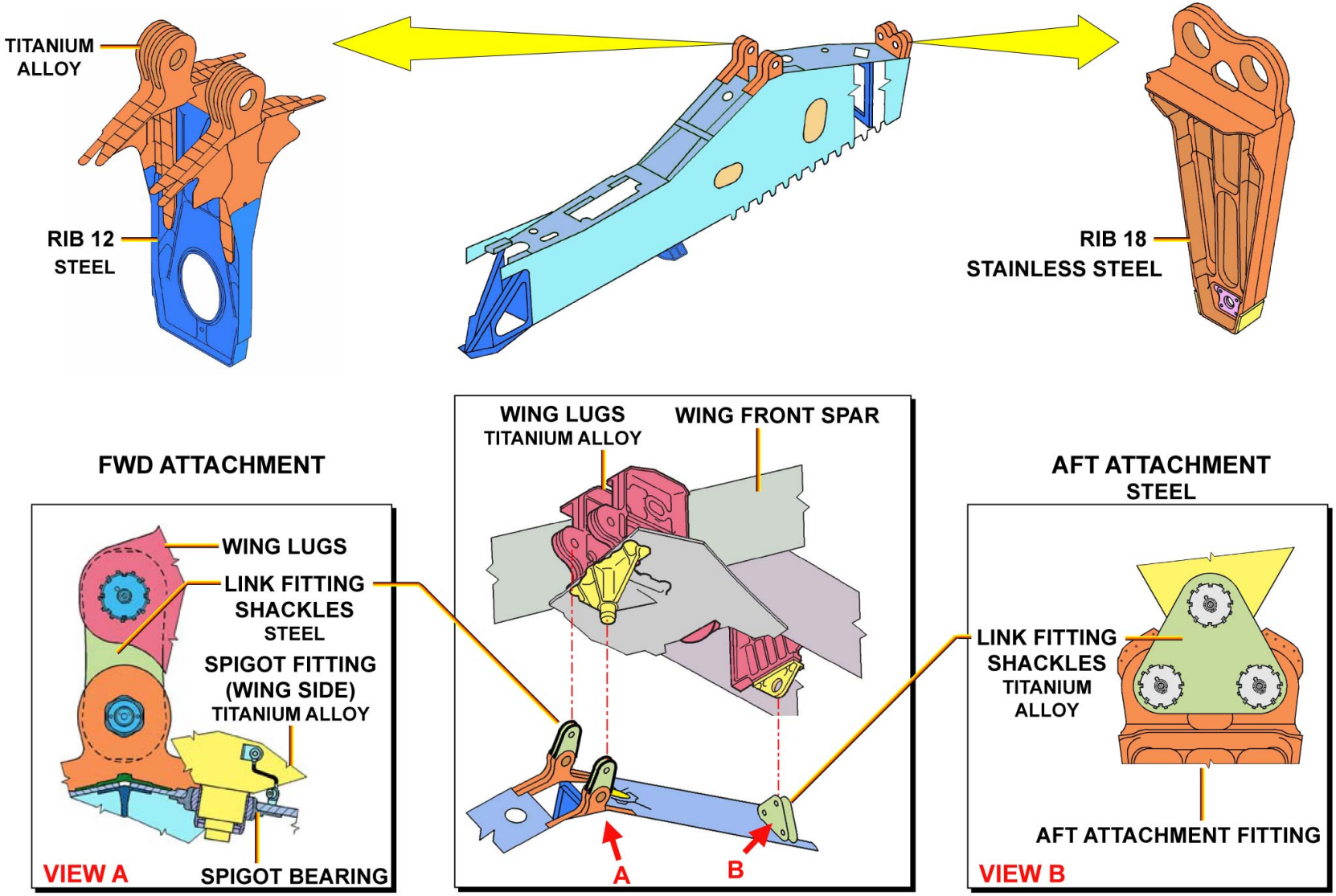

PYLONS PRIMARY STRUCTURE - PYLON BOX - PYLON TO WING ATTACHMENT

G7508471 - G3NT1T0 - FM51DY000000001

STABILIZERS D/O (3)

STABILIZERS - GENERAL ARRANGEMENT

The stabilizers have: the Trimmable Horizontal Stabilizer (THS), the elevators, the vertical stabilizer and the rudder. The horizontal stabilizer and the rudder are trimmable, the elevators give pitch control to the A/C, the rudder is one of the primary controls of the A/C.

G7508471 - G3NT1T0 - FM51DJ000000001

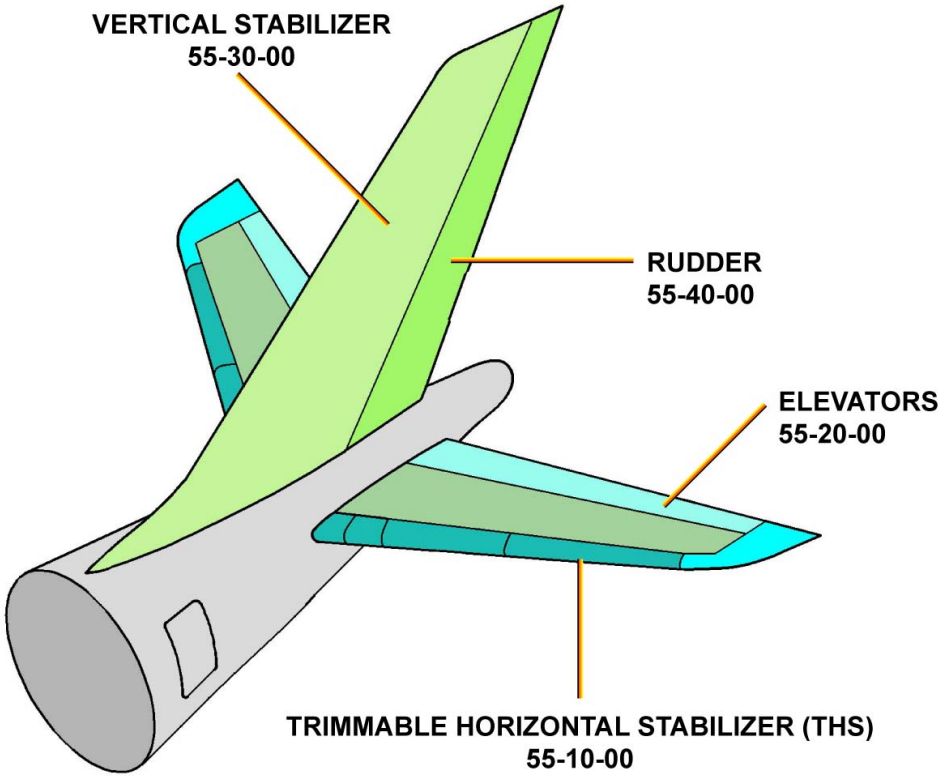

STABILIZERS - GENERAL ARRANGEMENT

G7508471 - G3NT1T0 - FM51DJ000000001

STABILIZERS D/O (3)

TRIMMABLE HORIZONTAL STABILIZER (THS)

GENERAL ARRANGEMENT

The Trimmable Horizontal Stabilizer (THS) main structure includes: the spar boxes (Center, LH side and RH side), the leading edge, the trailing edge and the attachment fittings. The spar boxes are the primary structure of the THS and supports all other components.

G7508471 - G3NT1T0 - FM51DJ000000001

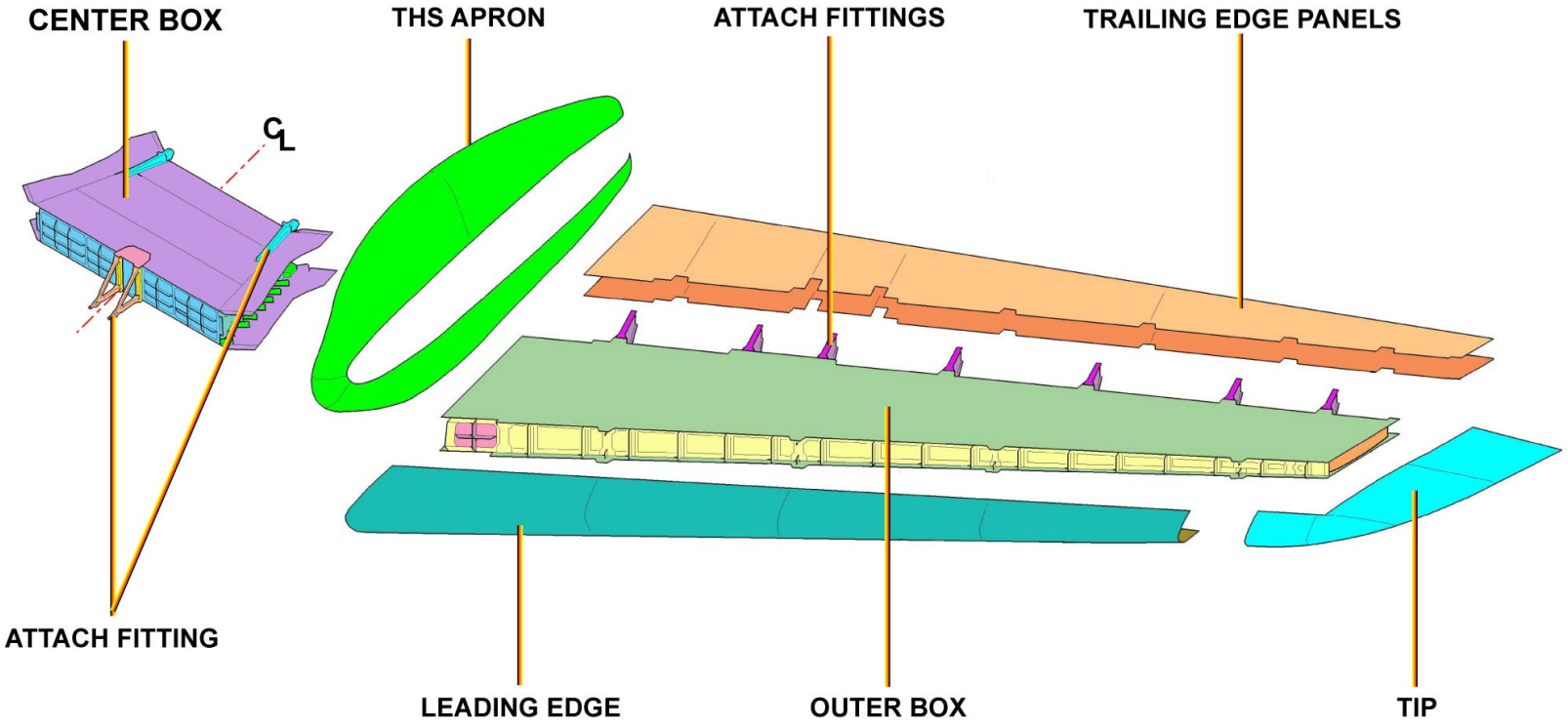

TRIMMABLE HORIZONTAL STABILIZER (THS) - GENERAL ARRANGEMENT

G7508471 - G3NT1T0 - FM51DJ000000001

STABILIZERS D/O (3)

TRIMMABLE HORIZONTAL STABILIZER (THS) (continued)

SPAR BOXES

The complete spar box assembly has the LH and RH side boxes and the center spar box. The center box joins the LH and RH side spar boxes to make one unit. Each spar box has a top and bottom skin panels, a front spar, a rear spar and nineteen ribs (from Rib 3 to Rib 21). The LH and the RH spar boxes are made of Carbon Fiber Reinforced Plastic (CFRP). The center box is made of aluminum-machined parts.

G7508471 - G3NT1T0 - FM51DJ000000001

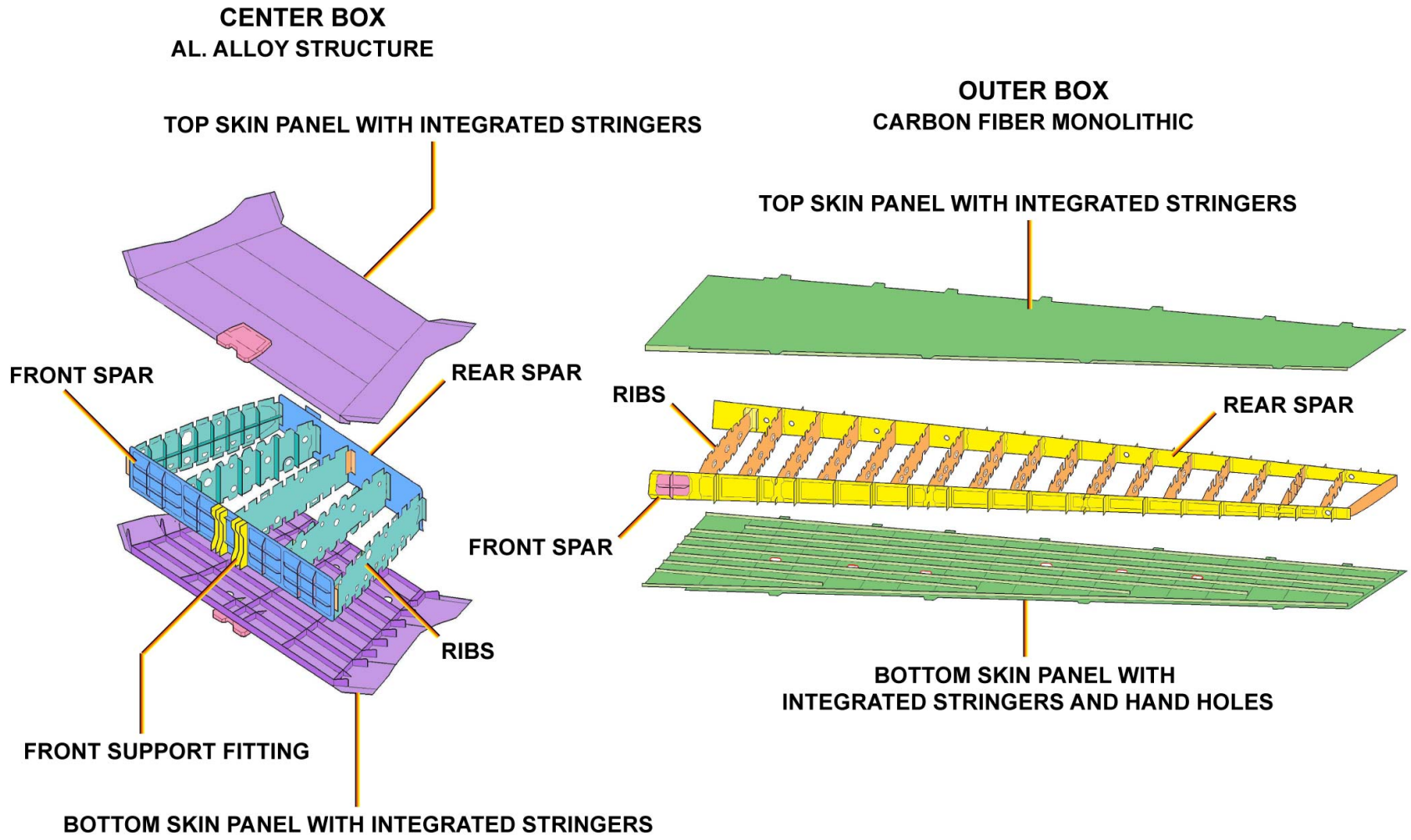

TRIMMABLE HORIZONTAL STABILIZER (THS) - SPAR BOXES

G7508471 - G3NT1T0 - FM51DJ000000001

STABILIZERS D/O (3)

TRIMMABLE HORIZONTAL STABILIZER (THS) (continued)

MAIN SUPPORT FITTINGS

The main support fittings are located on the center spar box:
- on the front spar: the THS actuator attach fitting connects the THS to the trim actuator,
- on the rear spar: the THS support fitting (two pivot points).

All fittings are made of aluminum alloy.

G7508471 - G3NT1T0 - FM51DJ000000001

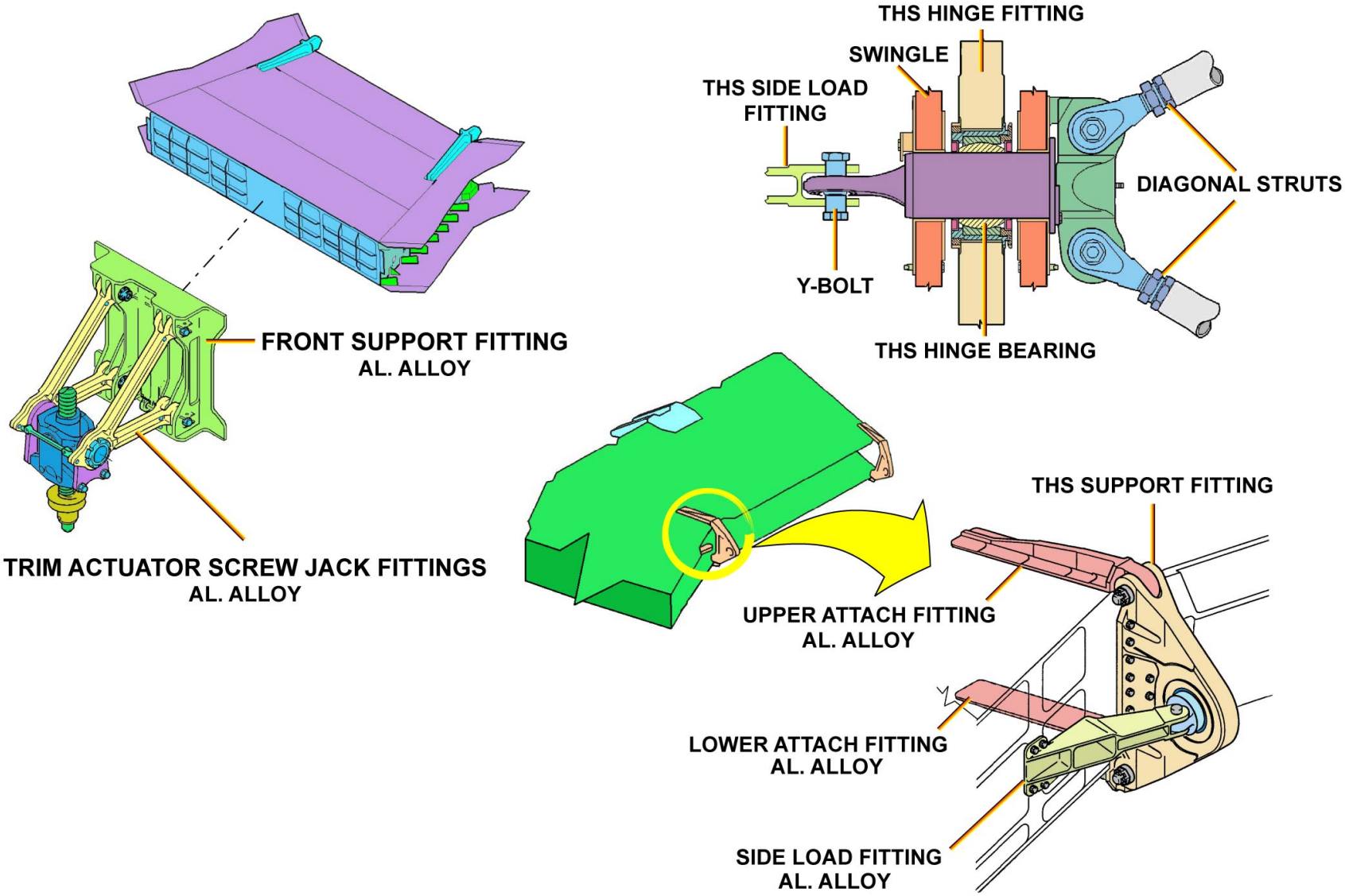

TRIMMABLE HORIZONTAL STABILIZER (THS) - MAIN SUPPORT FITTINGS

G7508471 - G3NT1T0 - FM51DJ000000001

STABILIZERS D/O (3)

TRIMMABLE HORIZONTAL STABILIZER (THS) (continued)

ELEVATOR ATTACHMENT FITTINGS

Each rear spar has seven elevator hinge arms, a diagonal strut to hold the elevators and two fittings for the attachment of the elevator servo control actuators.

G7508471 - G3NT1T0 - FM51DJ000000001

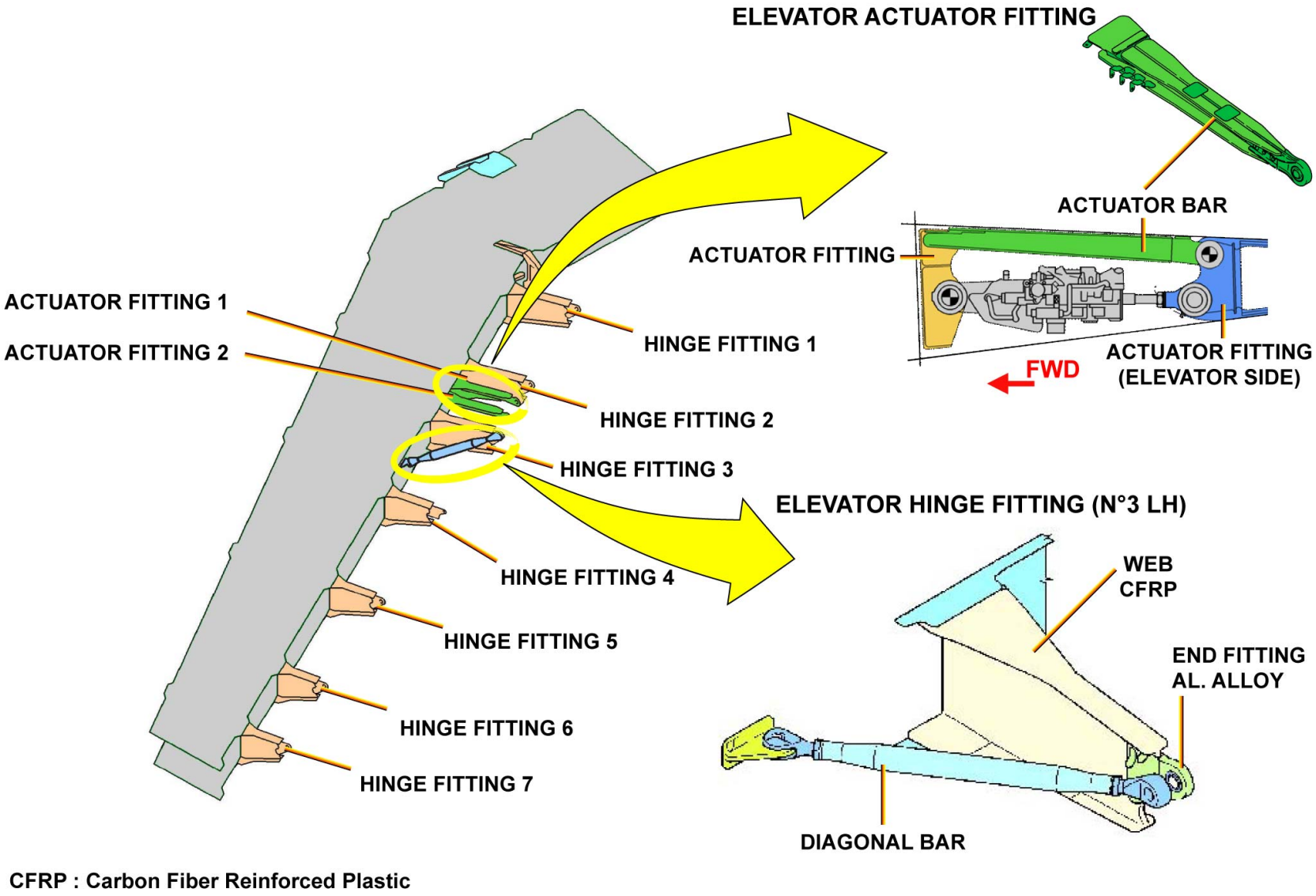

CFRP : Carbon Fiber Reinforced Plastic

TRIMMABLE HORIZONTAL STABILIZER (THS) - ELEVATOR ATTACHMENT FITTINGS

STABILIZERS D/O (3)

TRIMMABLE HORIZONTAL STABILIZER (THS) (continued)

LEADING EDGE

The leading edge has an aerodynamic shape at the front of the THS. On each side of the THS centerline, the THS leading edge includes: five Carbon Fiber Reinforced Plastic (CFRP) leading edge ribs, one outboard-leading edge section, two center-leading edge sections and one inboard-leading edge section. Each leading edge rib has anchor nuts for the installation of the leading edge sections. Each leading edge section is a full component, which includes an upper and lower panels, and a leading edge nose plate.

To give added strength to the leading edge panels a diagonal spar made of aluminum alloy is riveted to their internal structure.

To give added strength to the nose plate ("D-nose"), a diagonal spar made of titanium alloy is riveted to its internal structure.

The upper and lower leading edge panels are made of CFRP sandwich construction.

G7508471 - G3NT1T0 - FM51DJ000000001

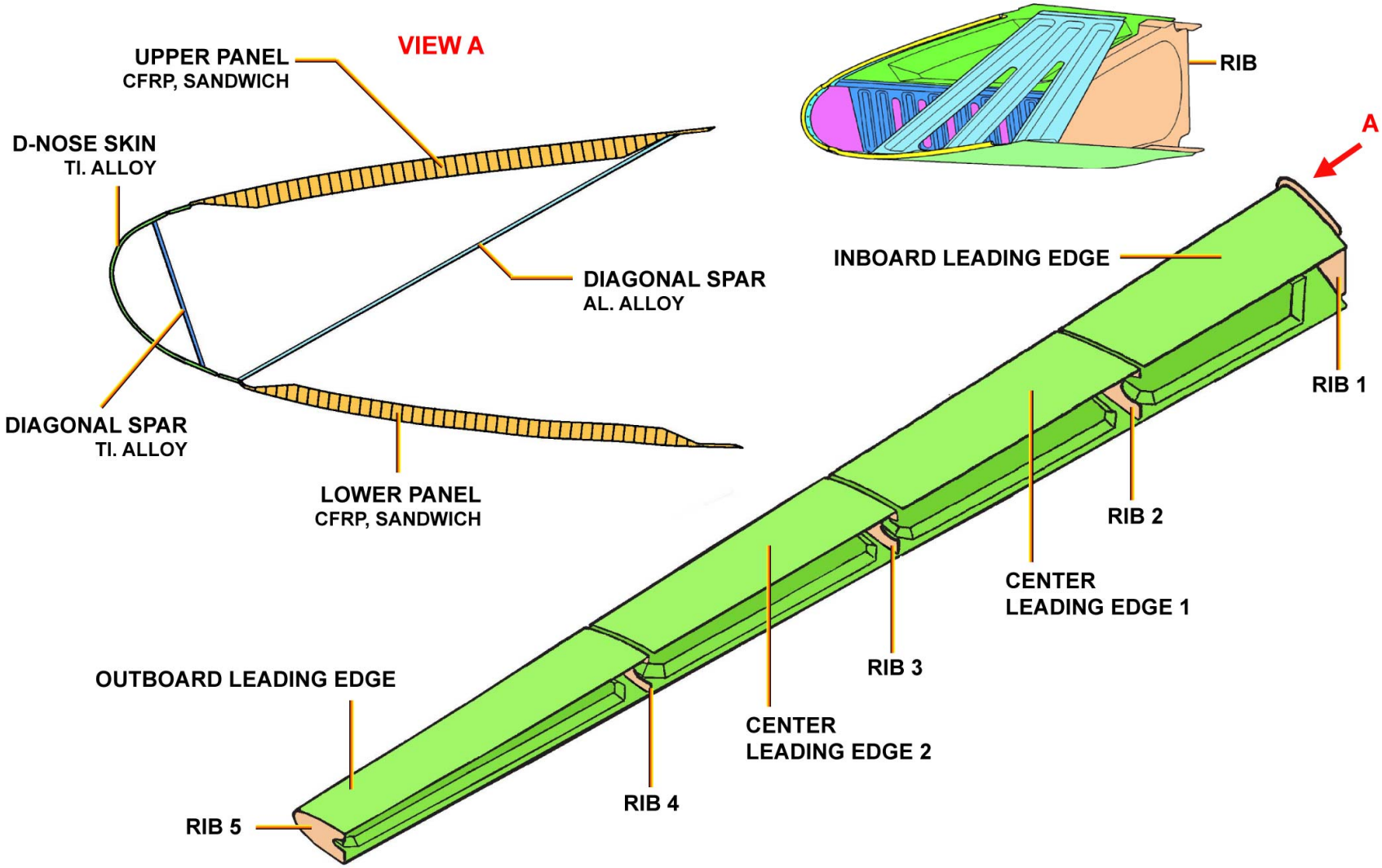

TRIMMABLE HORIZONTAL STABILIZER (THS) - LEADING EDGE

G7508471 - G3NT1T0 - FM51DJ00000001

STABILIZERS D/O (3)

TRIMMABLE HORIZONTAL STABILIZER (THS) (continued)

TIP

The THS tips complete the aerodynamic shape of the THS leading edge. The skin panels, spars and ribs are made of aluminum alloy. Four static dischargers are bolted to the THS leading edge and spar boxes.

G7508471 - G3NT1T0 - FM51DJ000000001

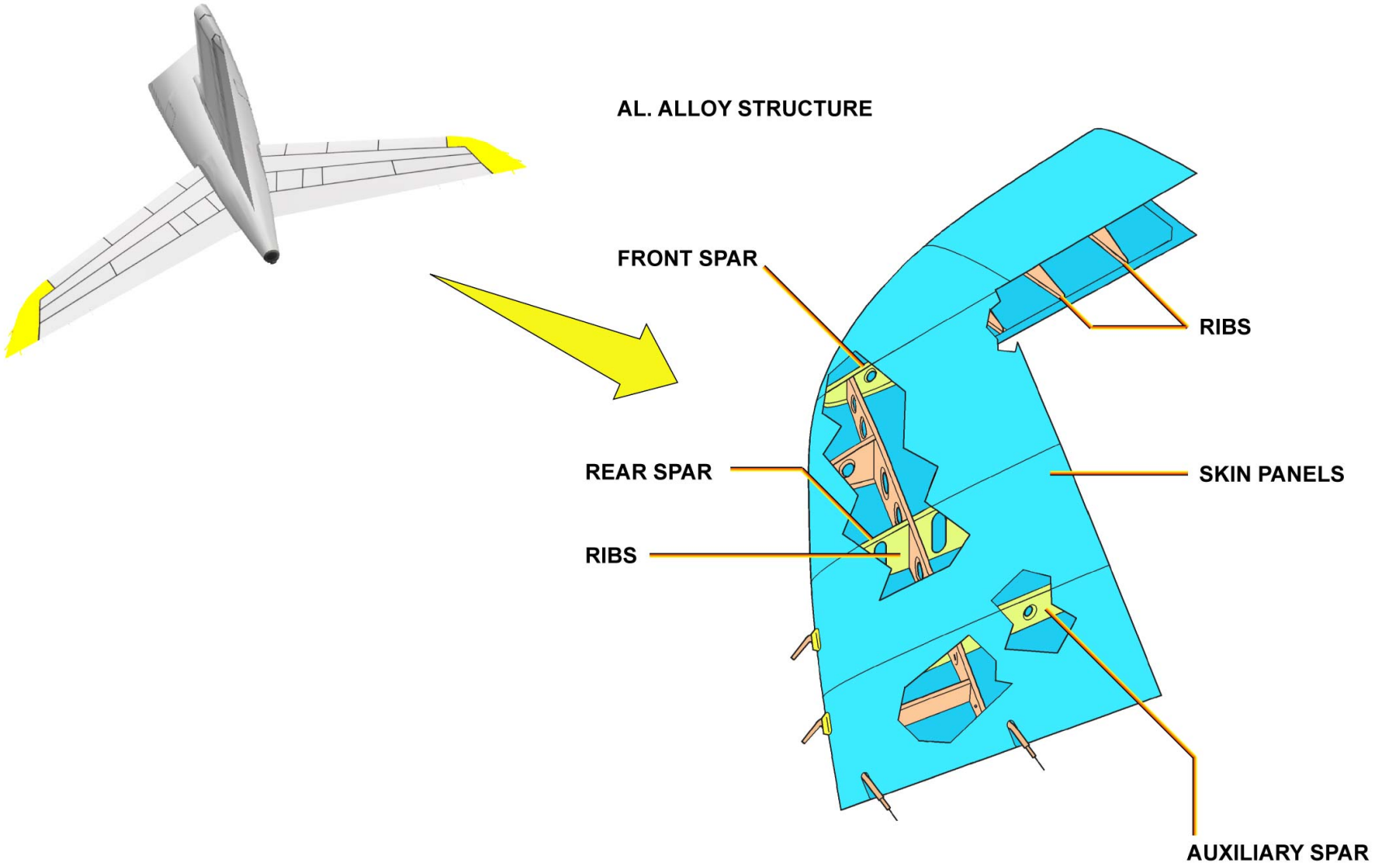

TRIMMABLE HORIZONTAL STABILIZER (THS) - TIP

G7508471 - G3NT1T0 - FM51DJ000000001

STABILIZERS D/O (3)

TRIMMABLE HORIZONTAL STABILIZER (THS) (continued)

TRAILING EDGE

The trailing edge has an aerodynamic surface between the THS spar box and the elevator. On each side of the THS, the trailing edge panels (five top panels and seven bottom access panels) are supported by six intermediate ribs, and by seven hinge arm supports. The panels are made of CFRP sandwich construction. The panel assemblies and the access panels are sealed with rubber seal strip to prevent ingress of contaminants.

G7508471 - G3NT1T0 - FM51DJ000000001

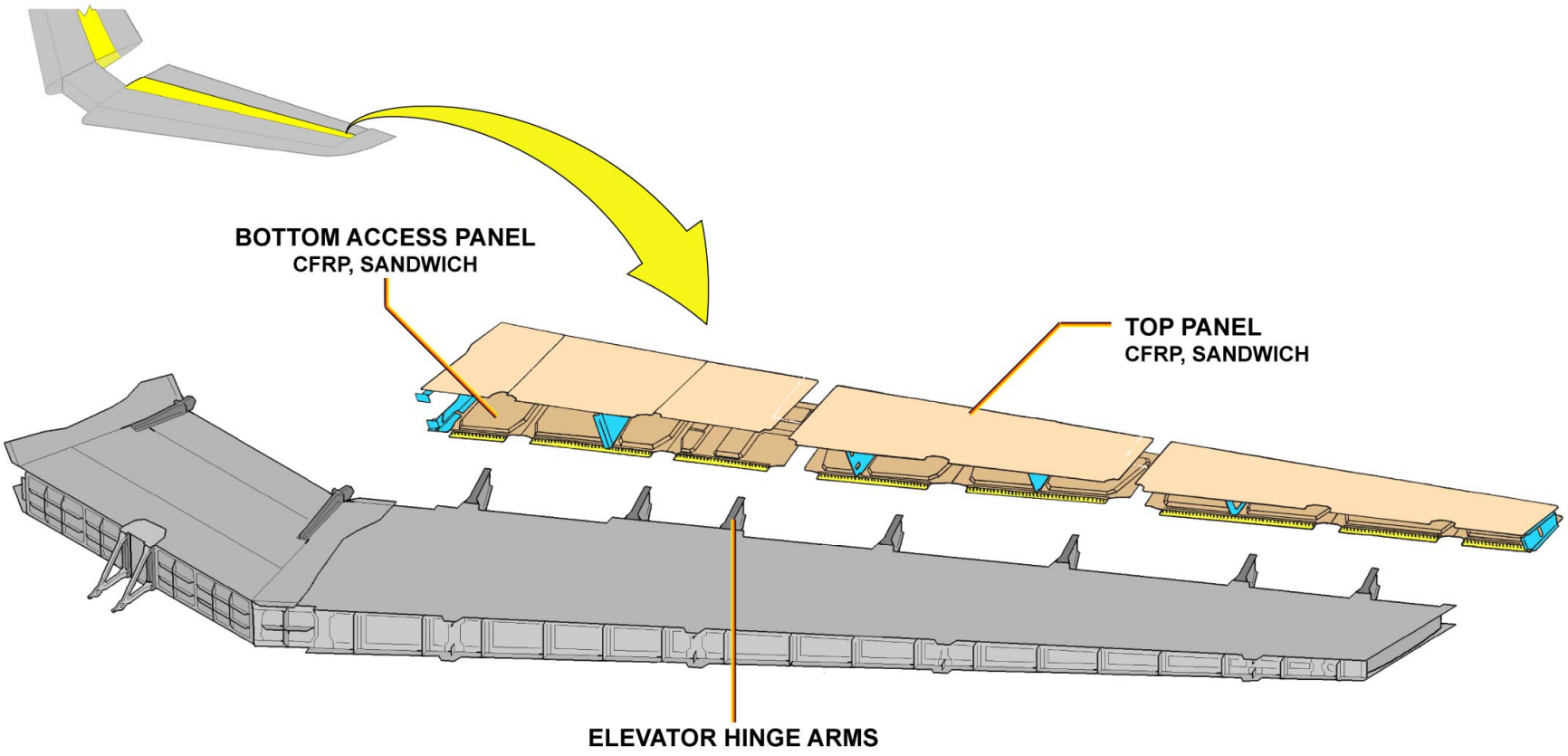

TRIMMABLE HORIZONTAL STABILIZER (THS) - TRAILING EDGE

G7508471 - G3NT1T0 - FM51DJ000000001

STABILIZERS D/O (3)

TRIMMABLE HORIZONTAL STABILIZER (THS) (continued)

APRON

The horizontal stabilizer aprons have an aerodynamic seal between the horizontal stabilizer and the fuselage. Each apron has three sections, an upper, a lower and a forward section. The aprons are made of CFRP. To minimize friction between the aprons and the fuselage, the contact edge of each apron has a segmented lip of polytetra-fluorethylene (PTFE). The apron support fittings are made of aluminum alloy.

G7508471 - G3NT1T0 - FM51DJ000000001

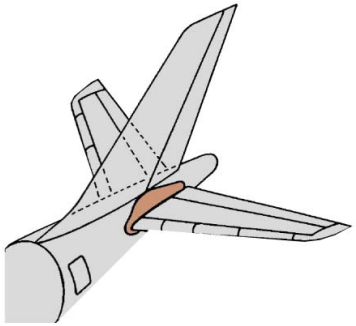

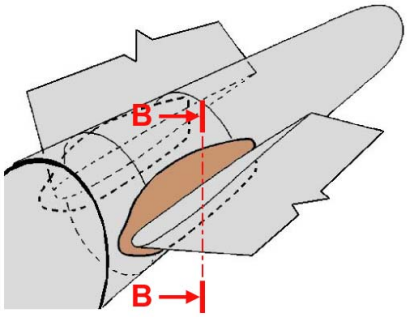

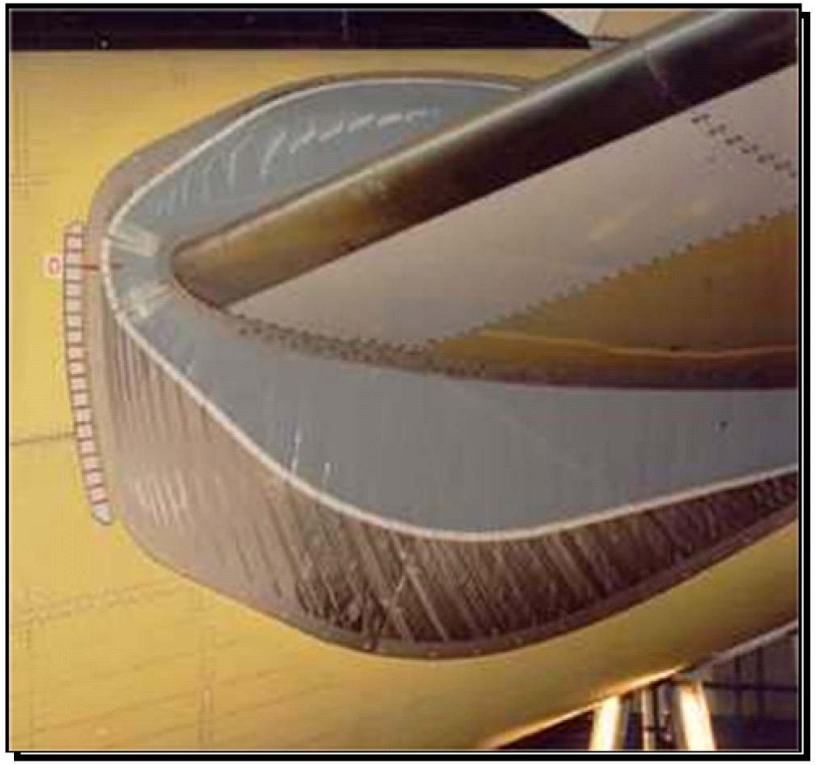

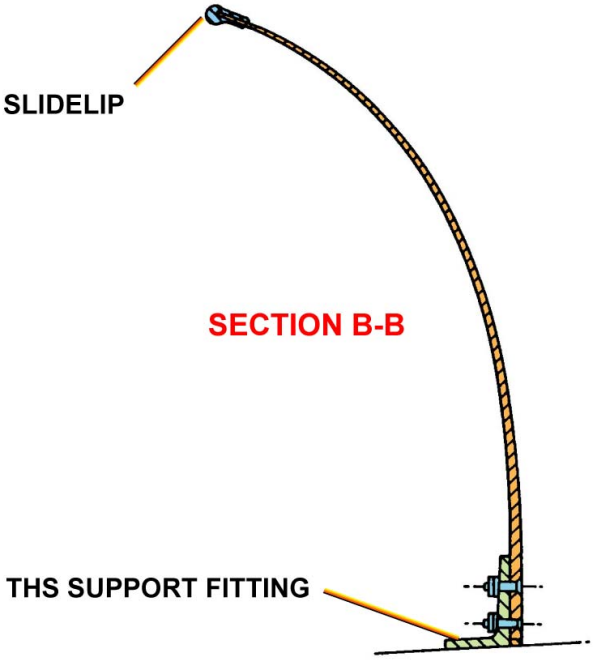

TRIMMABLE HORIZONTAL STABILIZER (THS) - APRON

G7508471 - G3NT1T0 - FM51DJ000000001

STABILIZERS D/O (3)

ELEVATORS - STRUCTURE LAYOUT

Each elevator box has a: top and bottom skin panels, a front spar and eleven ribs. All are made of CFRP sandwich construction. A light-alloy profile (not shown) is riveted to the trailing edge to make it stronger. Each elevator has seven hinge support fittings, two actuator fittings and a position transducer fitting attached to the front spar. The rounded forward edge of the top and bottom skin panels shapes the elevator leading edge. Eleven ribs strength the leading edge. All components are made of CFRP.

G7508471 - G3NT1T0 - FM51DJ000000001

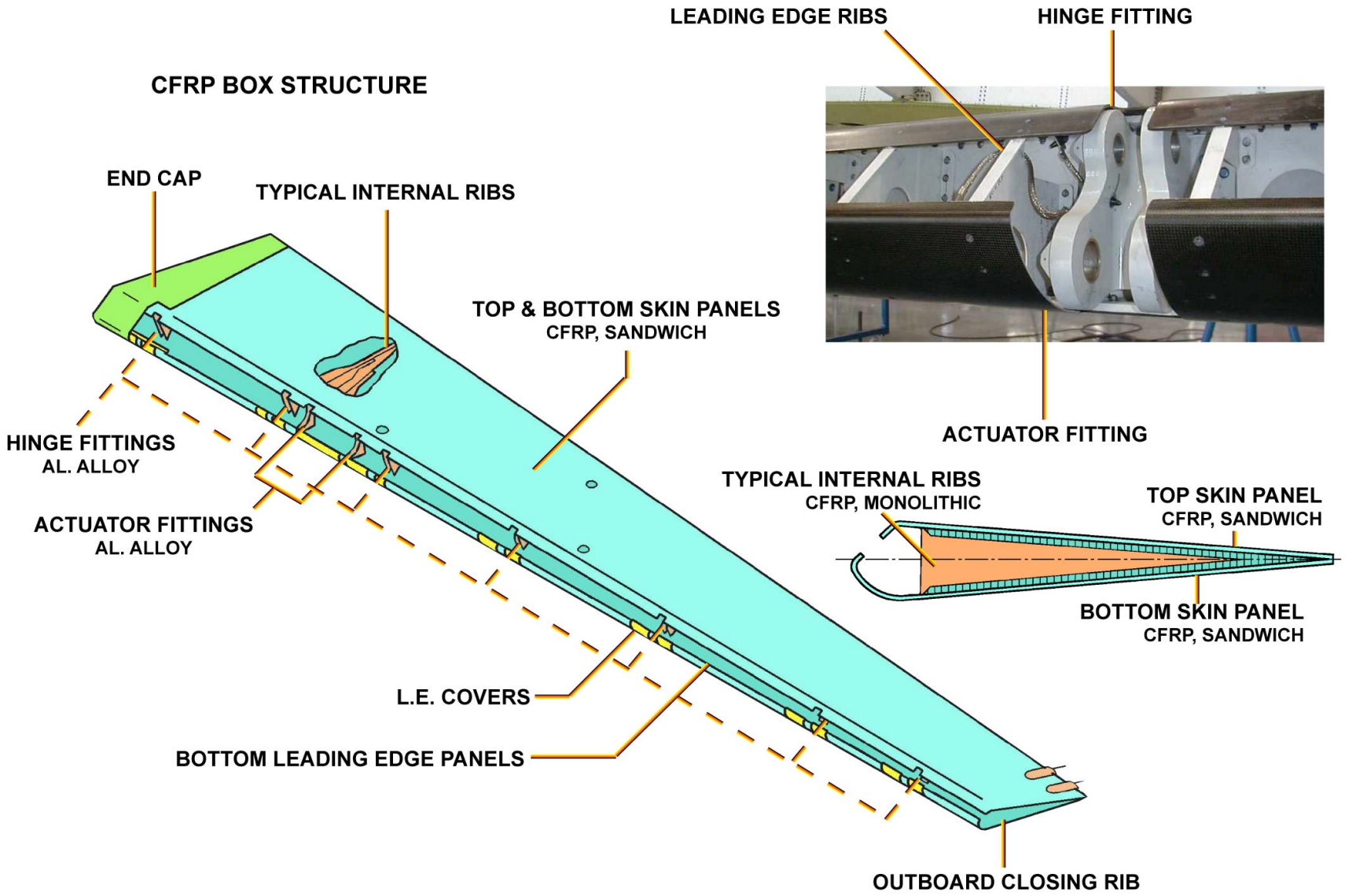

ELEVATORS - STRUCTURE LAYOUT

G7508471 - G3NT1T0 - FM51DJ000000001

STABILIZERS D/O (3)

VERTICAL STABILIZER

GENERAL ARRANGEMENT

The vertical stabilizer is attached to the top of the rear fuselage. It supports the rudder, which is operated by three servo control units. The High Frequency (HF) antenna and the Very high frequency Omnibearing Range (VOR) antenna are also attached to the top of the rear fuselage.

The main components of the vertical stabilizer are:

- the spar box,
- the leading edge,
- the trailing edge,
- the tip,
- the attach fittings.

G7508471 - G3NT1T0 - FM51DJ000000001

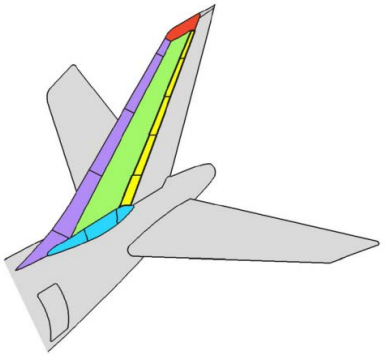

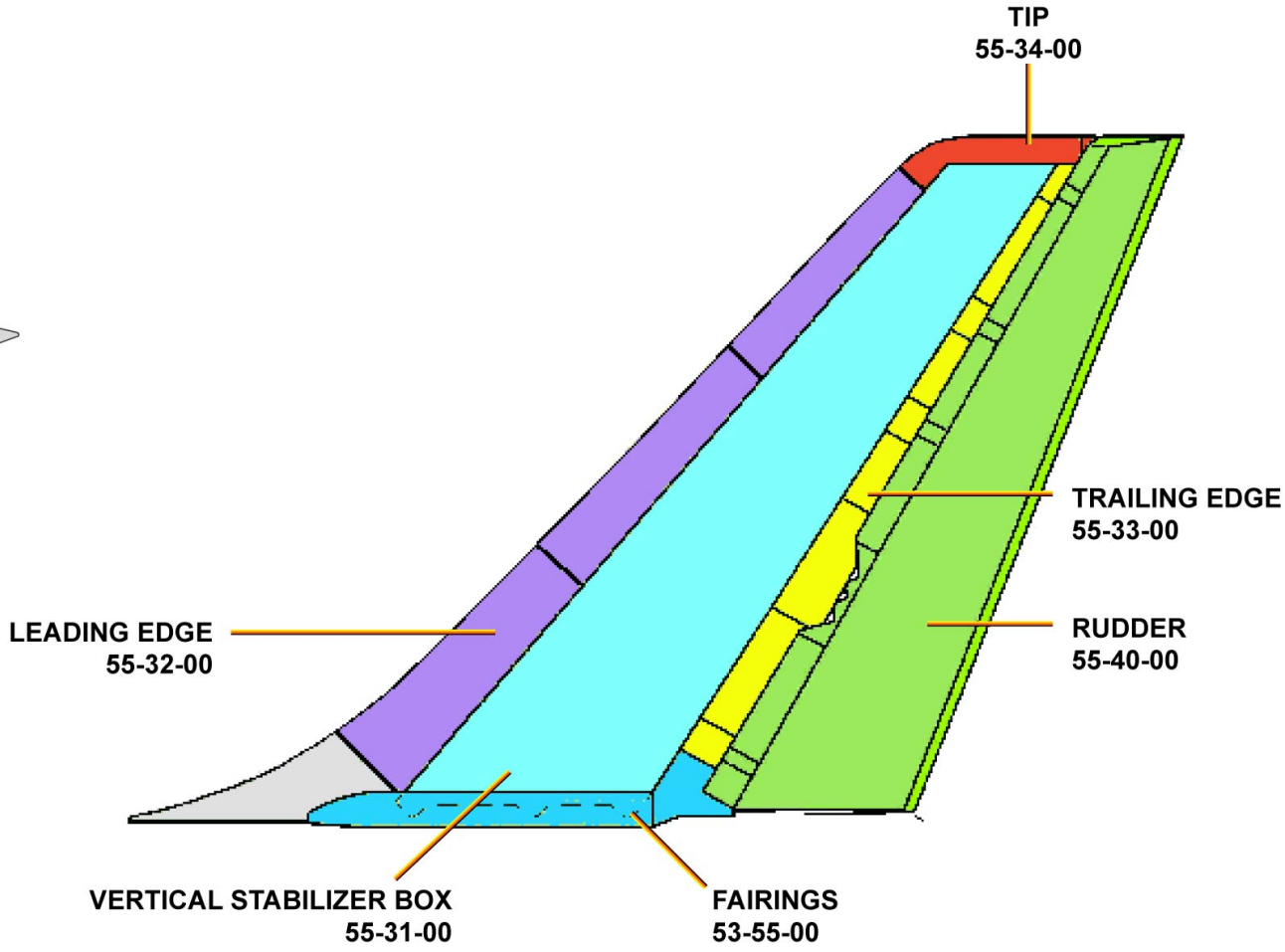

VERTICAL STABILIZER - GENERAL ARRANGEMENT

G7508471 - G3NT1T0 - FM51DJ000000001

STABILIZERS D/O (3)

VERTICAL STABILIZER (continued)

SPAR BOX

The spar box is the primary structural component of the vertical stabilizer. All other components of the vertical stabilizer are attached to this spar box.
The main components of the spar box are: the front, the center and rear spars, the ribs and the side panels with integrated stiffeners, all made of CFRP.

G7508471 - G3NT1T0 - FM51DJ000000001

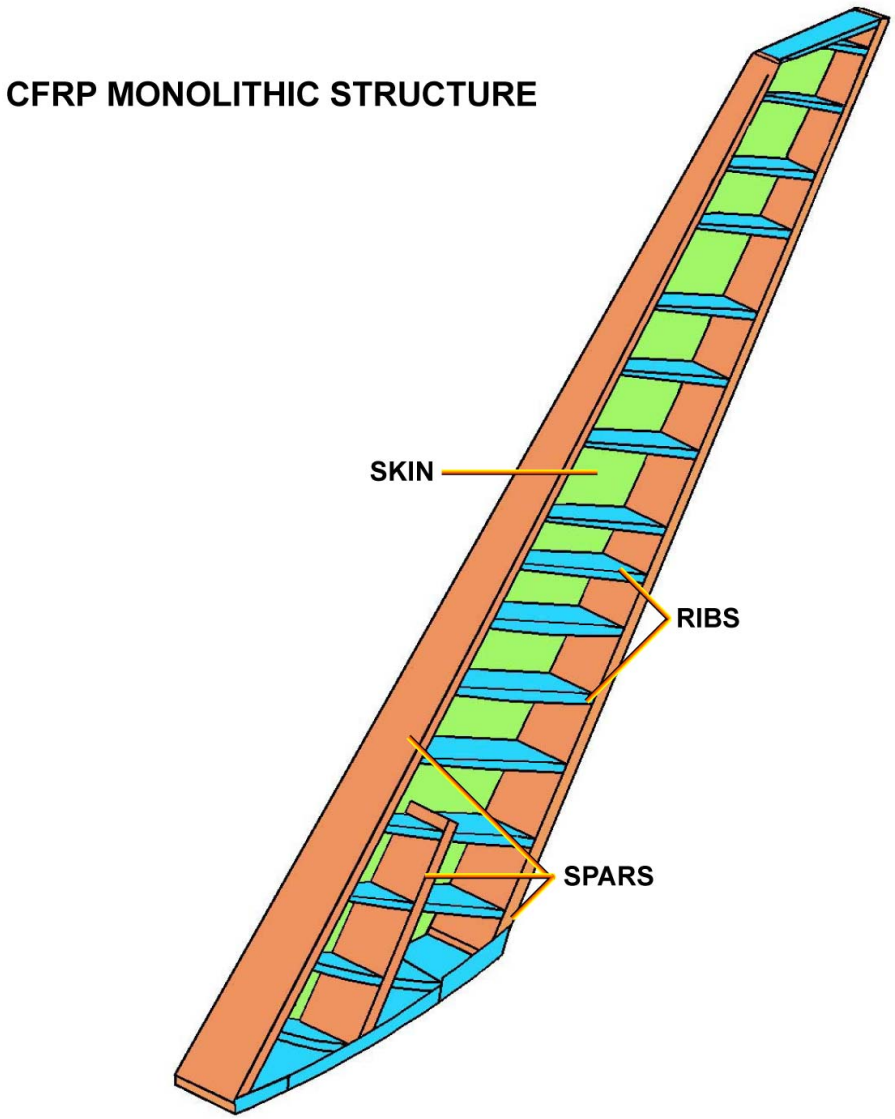

VERTICAL STABILIZER - SPAR BOX

G7508471 - G3NT1T0 - FM51DJ000000001

STABILIZERS D/O (3)

VERTICAL STABILIZER (continued)

FUSELAGE ATTACHMENT

The vertical stabilizer has six main attach fittings. They are made of CFRP and are bonded to the lower end of the skin panels (the skin, the stringers, the flanges and three fuselage attach fittings are one unit). The fittings are installed in pairs at the front, the center and the rear spar.

The three transverse load fittings are made of CFRP. They are bonded to the lower end of the front, the center and the rear spar. The transverse load fittings transmit the transverse loads of the vertical stabilizer to the fuselage.

G7508471 - G3NT1T0 - FM51DJ000000001

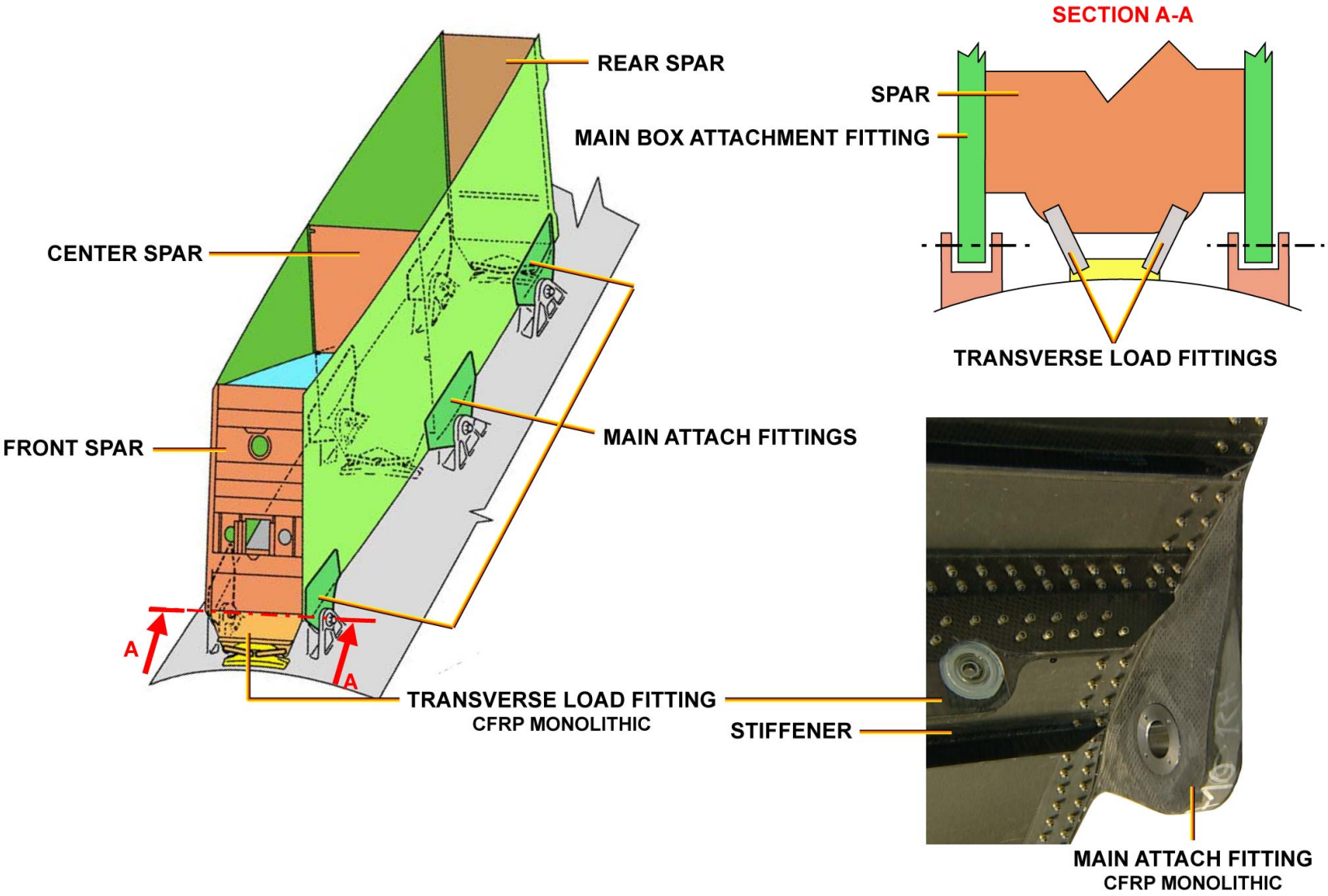

VERTICAL STABILIZER - FUSELAGE ATTACHMENT

G7508471 - G3NT1T0 - FM51DJ000000001

STABILIZERS D/O (3)

VERTICAL STABILIZER (continued)

RUDDER ATTACHMENT

On the A330-200, the eight rudder hinge arms and the three actuator hinge fittings are made from aluminum alloy. They are attached to the spar box rear spar.

G7508471 - G3NT1T0 - FM51DJ000000001

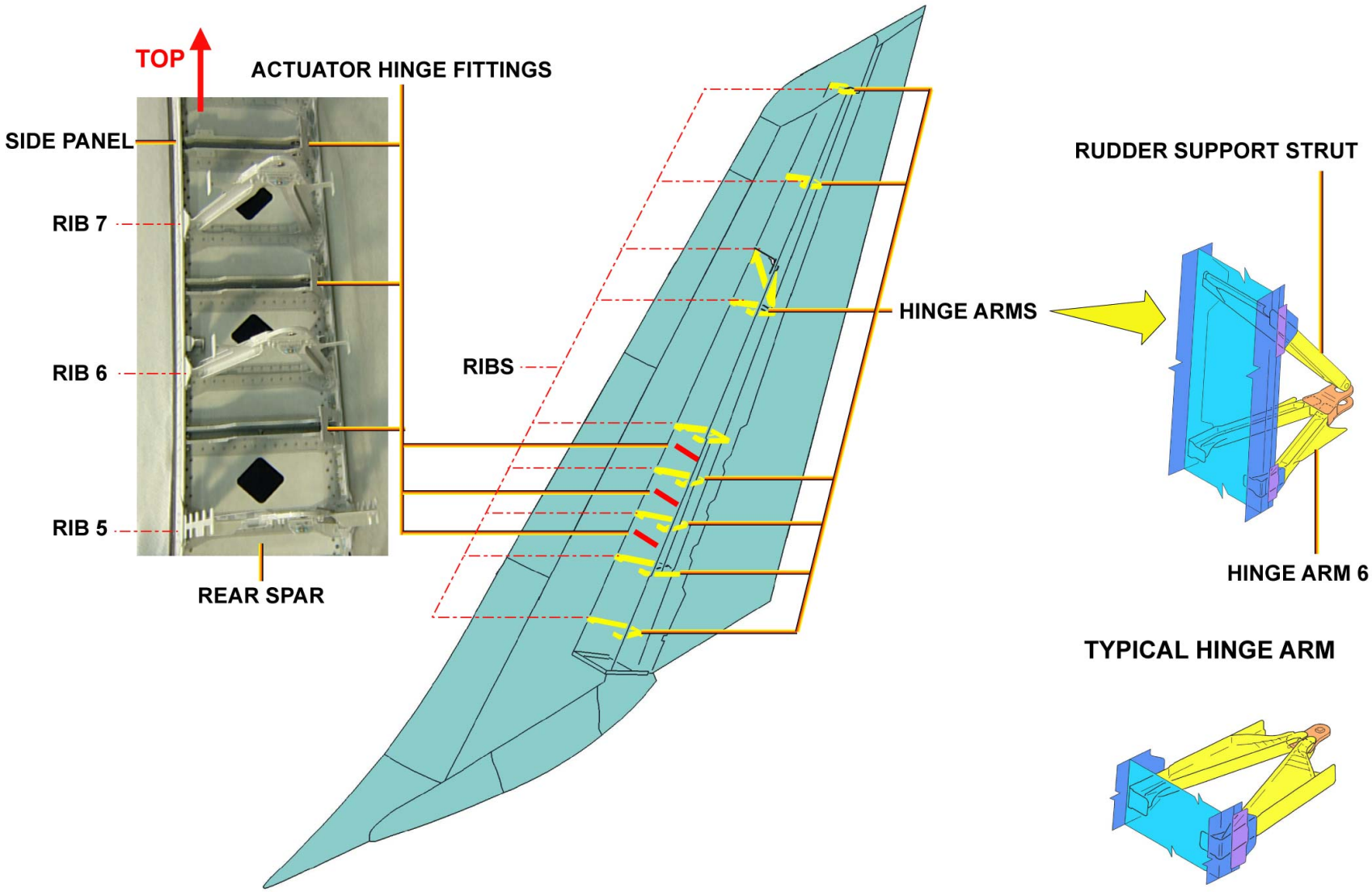

VERTICAL STABILIZER - RUDDER ATTACHMENT

G7508471 - G3NT1T0 - FM51DJ000000001

STABILIZERS D/O (3)

VERTICAL STABILIZER (continued)

LEADING EDGE

The vertical stabilizer leading edge has three or four removable sections. They are attached to the forward edge of the spar box side panels and to the leading edge ribs. The lower section gives access to the HF antenna. The four sections give an aerodynamic shape to the front of the vertical stabilizer. The four sections are made of Glass Fiber Reinforced Plastic (GFRP) sandwich construction. A protective foil is bonded to the inner surfaces of the sections. Countersunk screws attach the leading edge sections to the front spar and to the leading edge ribs.

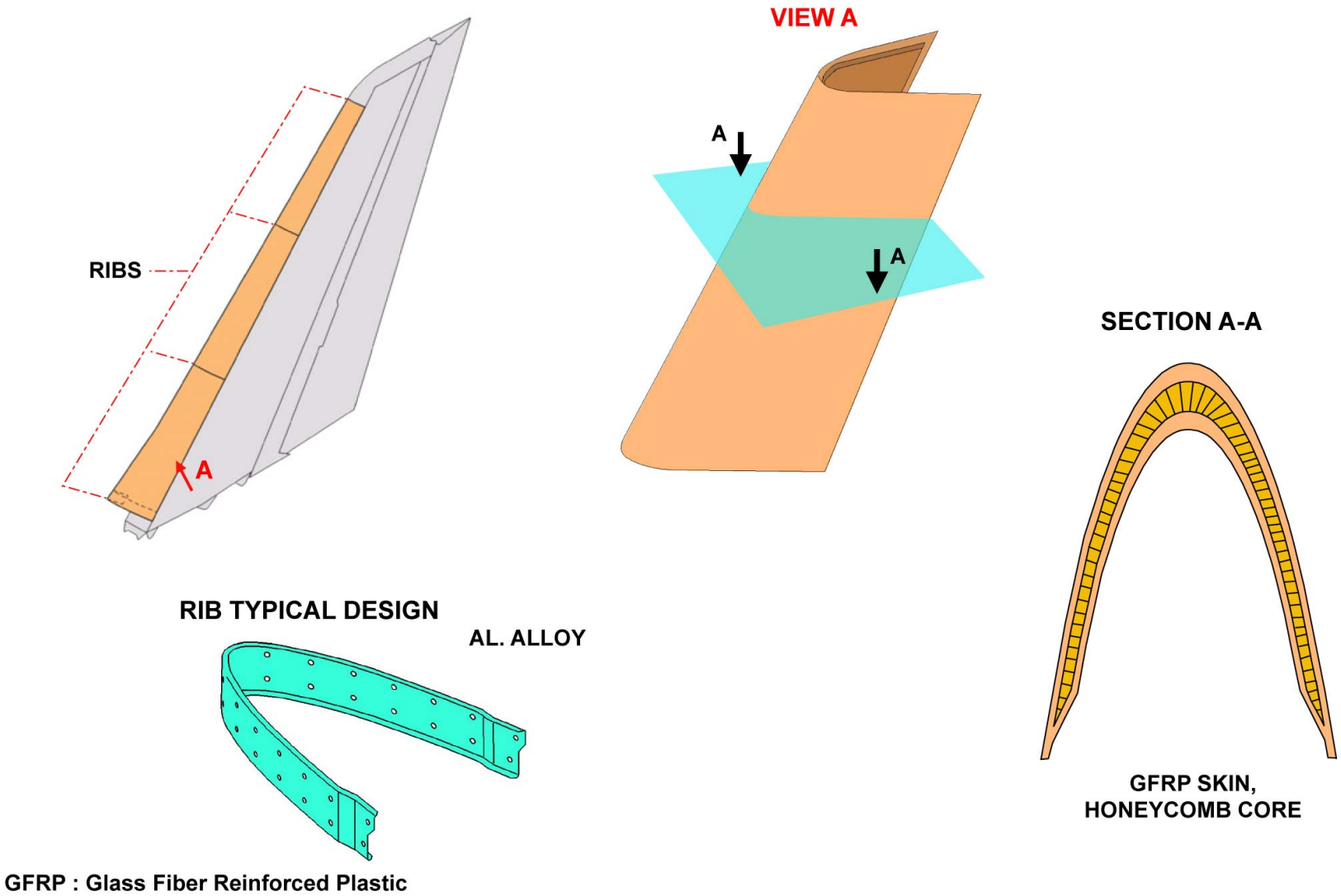

VERTICAL STABILIZER - LEADING EDGE

G7508471 - G3NT1T0 - FM51DJ000000001

STABILIZERS D/O (3)

VERTICAL STABILIZER (continued)

TIP

The tip is the upper fairing of the vertical stabilizer. It is attached to the top of the spar box and to the front spar. It is made of GFRP skin bonded to a honeycomb core. An aluminum alloy strap is installed on the top of the tip for lightning strike protection.

G7508471 - G3NT1T0 - FM51DJ000000001

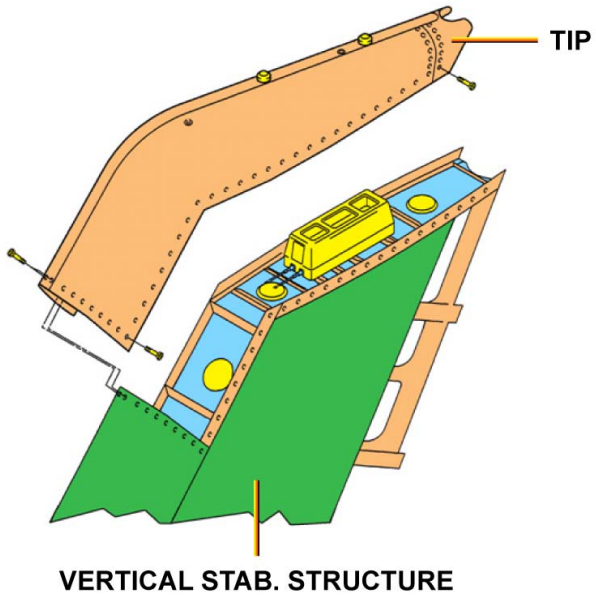

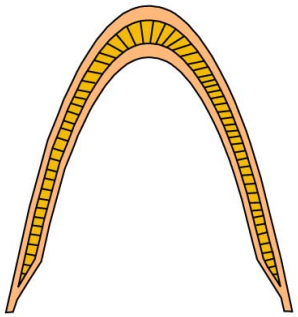

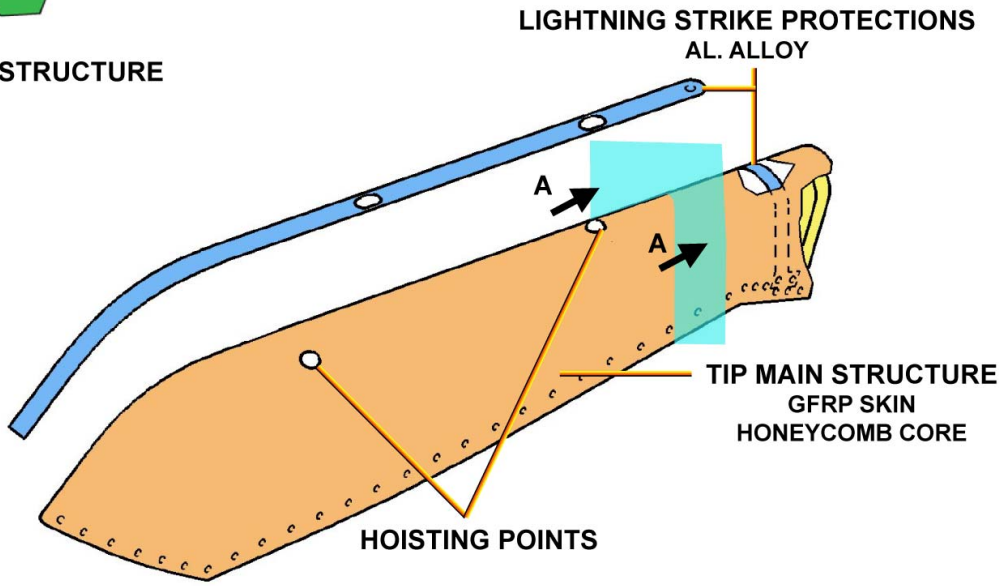

VERTICAL STABILIZER - TIP

G7508471 - G3NT1T0 - FM51DJ00000001

STABILIZERS D/O (3)

VERTICAL STABILIZER (continued)

TRAILING EDGE

The trailing edge is attached to the rear of the vertical stabilizer. It has a basic framework made of aluminum and ten access panels (five on each side). The panels give access to the rudder hydraulics, the servo controls, the control rods and the hinge fittings. The panels are made of CFRP sandwich construction.

G7508471 - G3NT1T0 - FM51DJ000000001

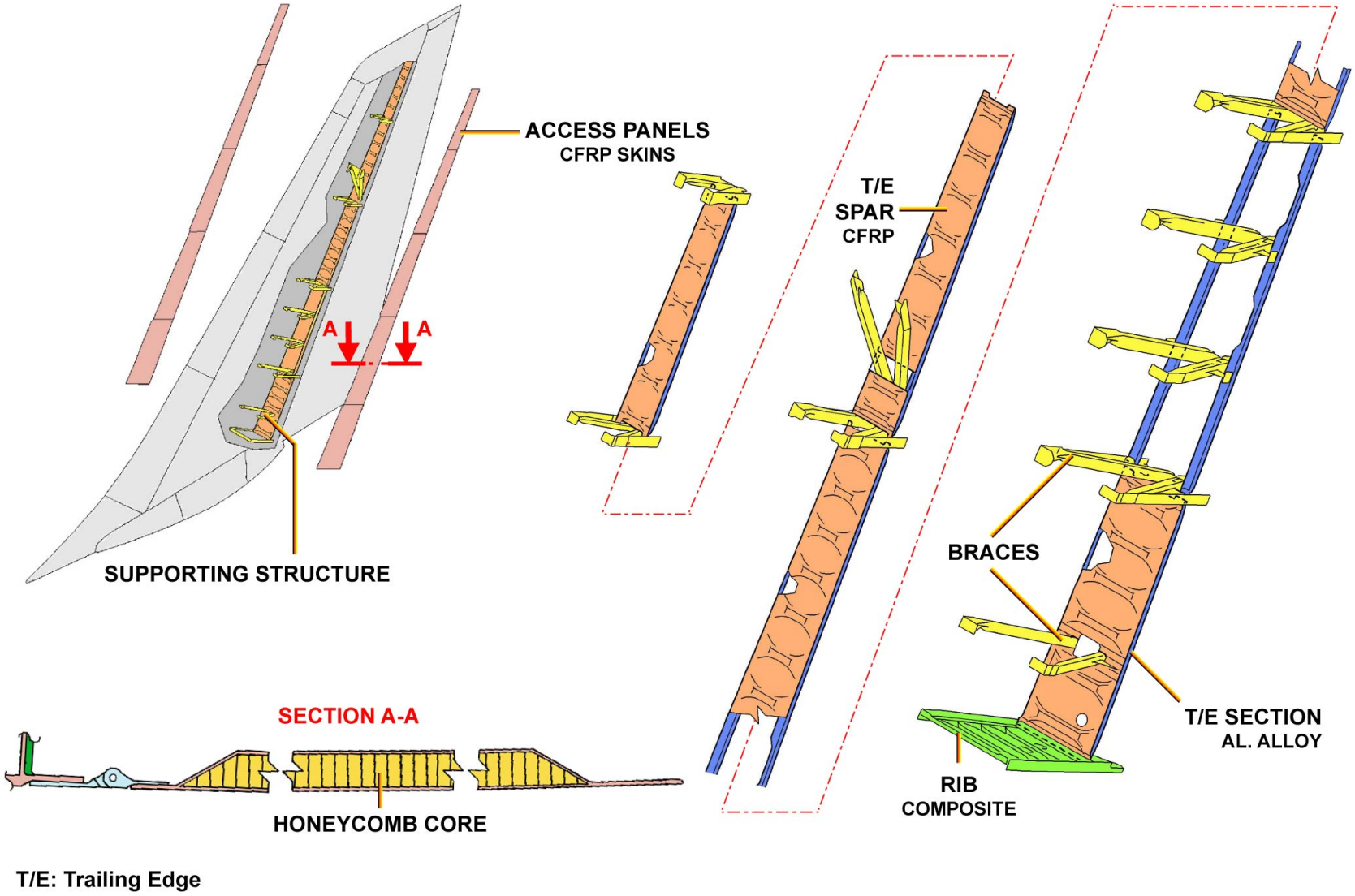

VERTICAL STABILIZER - TRAILING EDGE

STABILIZERS D/O (3)

RUDDER

The rudder is one of the primary flight controls of the aircraft.
The main components of the rudder are:
- the main structure,
- the leading edge panels and ribs made of CFRP,
- the aluminum alloy tip,
- the seven (A330-300) or height (A330-200) hinge fittings and the three actuator fittings.

The rudder main structure is the primary structural component of the rudder.
It has an assembly of:
- two skin panels made of CFRP sandwich construction,
- a carbon fiber front spar,
- a bottom carbon fiber closing rib
- a top aluminum alloy closing rib.

All the other components of the rudder are attached to the rudder main structure. Four access panels give access to the hinge fittings. Four static dischargers are installed on the upper part of the rudder trailing edge.

G7508471 - G3NT1T0 - FM51DJ000000001

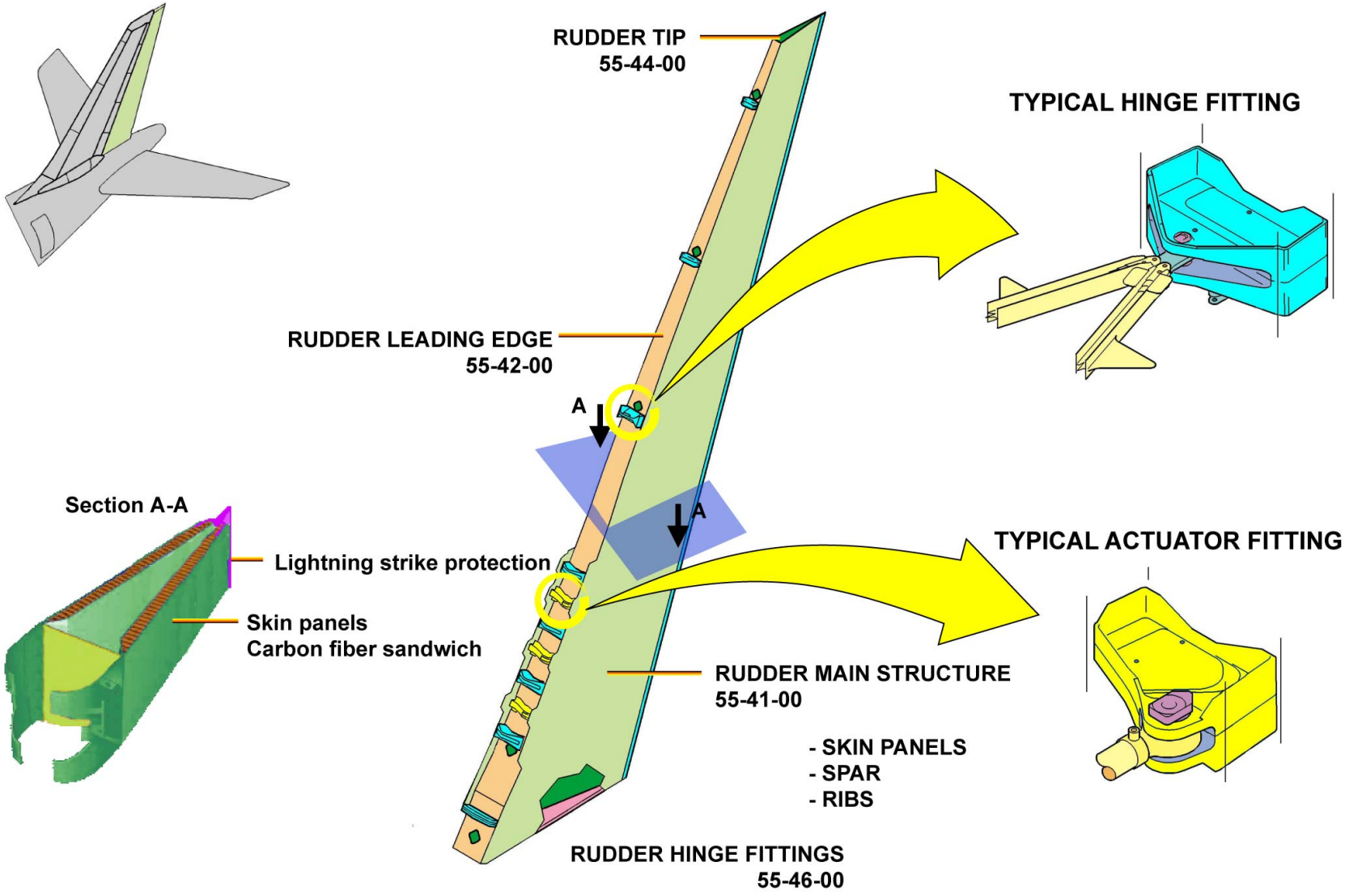

RUDDER

G7508471 - G3NT1T0 - FM51DJ000000001

WINDOWS D/O (3)

GENERAL

The windows are installed in:
- the cockpit,
- the cabin,
- the doors,
- inspection and observation areas.

All the windows, which are installed in pressurized areas of the fuselage structure, are fail-safe.

G7508471 - G3NT1T0 - FM51D4000000001

GENERAL

G7508471 - G3NT1T0 - FM51D400000001

WINDOWS D/O (3)

COCKPIT WINDOWS

GENERAL ARRANGEMENT

There are two types of windows:
- the fixed windows,
- the sliding windows.

Fixed Windows:
There are four fixed windows installed in the cockpit:
- two windshields,
- two fixed side windows.

The left and right windows are symmetrical.
These windows are mounted in a frame. This frame enables the removal and installation of these windows from the outside.
Sliding Windows:
The sliding windows are installed on a mobile frame fitted with a mechanism which is controlled from the cockpit.
To meet the correct in flight visibility conditions required, the cockpit windows are protected against the ice, mist and rain.
- the windshield against the ice, mist and rain,
- the side windows against the mist.

G7508471 - G3NT1T0 - FM51D4000000001

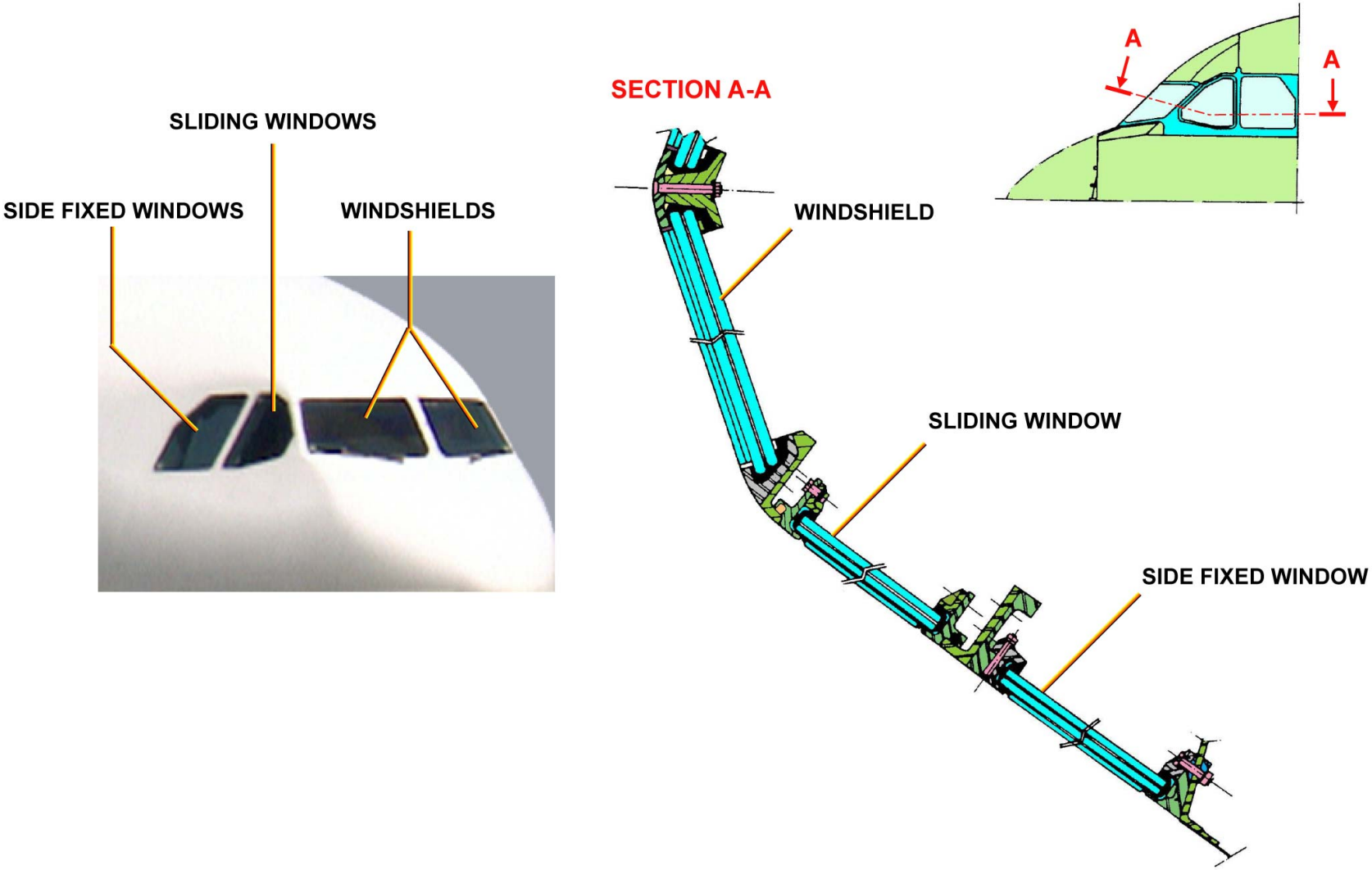

COCKPIT WINDOWS - GENERAL ARRANGEMENT

G7508471 - G3NT1T0 - FM51D4000000001

WINDOWS D/O (3)

COCKPIT WINDOWS (continued)

WINDSHIELDS

Frame:
The windshield panels are mounted in a frame integrated into the nose structure.
The panels are held in position by three retainers (upper, lower and front) bolted to the outer face of the frame.
Windshield panel assembly:
The windshield panel assembly is made up of several panes of different materials (from ext. to int.):
glass, PU (Polyurethane), glass, PVB (Polyvinyl Butyral), glass.

G7508471 - G3NT1T0 - FM51D4000000001

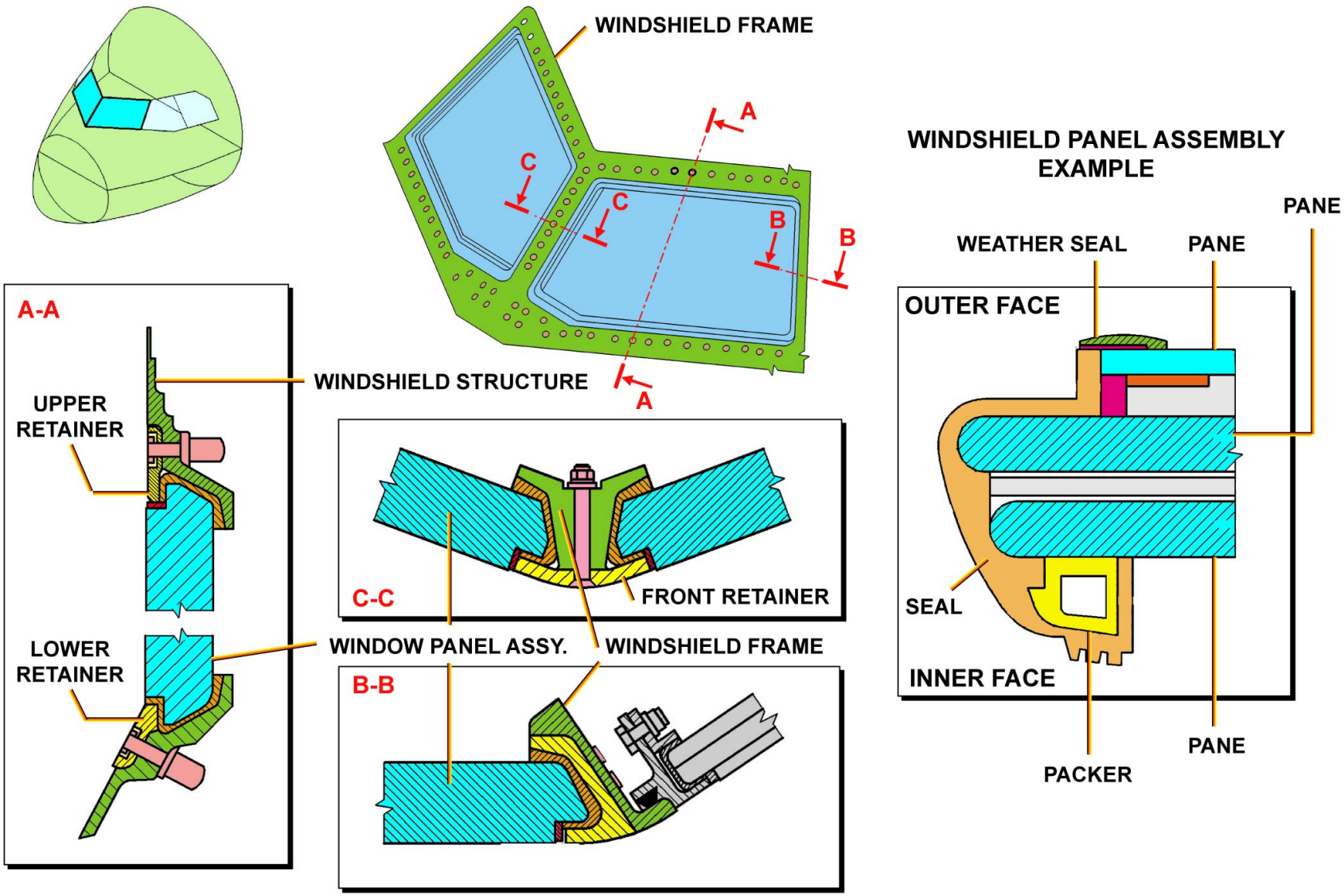

COCKPIT WINDOWS - WINDSHIELDS

G7508471 - G3NT1T0 - FM51D400000001

WINDOWS D/O (3)

COCKPIT WINDOWS (continued)

SIDE FIXED WINDOWS

Frame:
The window panels are held in position on a removable frame, by a retainer.
The frame assembly is also bolted on to the aircraft frame and is sealed by a sealing compound.
Window panel assembly:
The window panel assembly is made of several panes of different materials (same as fixed windows).

G7508471 - G3NT1T0 - FM51D4000000001

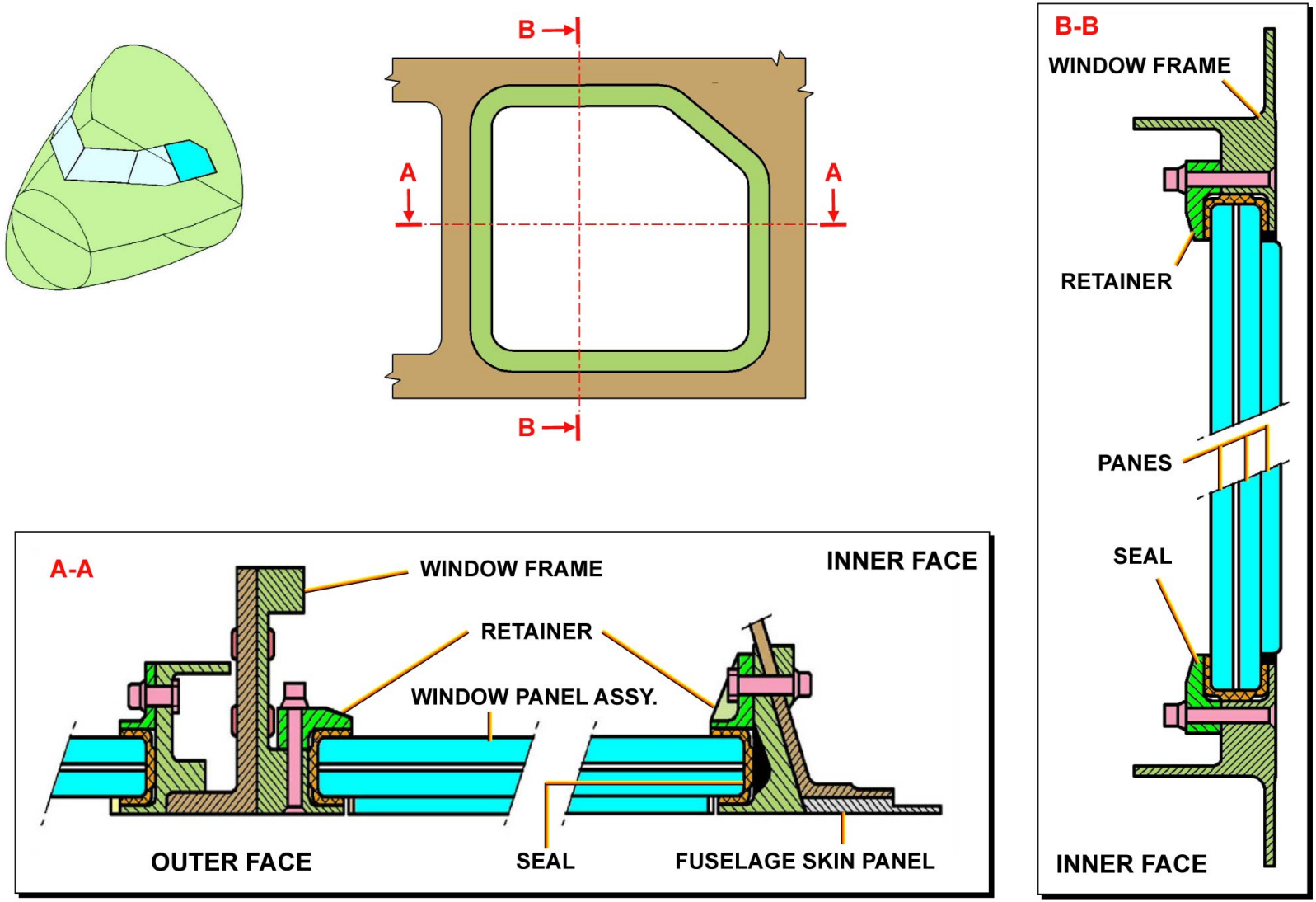

COCKPIT WINDOWS - SIDE FIXED WINDOWS

G7508471 - G3NT1T0 - FM51D400000001

WINDOWS D/O (3)

COCKPIT WINDOWS (continued)

SLIDING WINDOWS

Mobile frame:
The sliding windows are installed on a mobile frame fitted with a mechanism which is controlled from the cockpit.
The panels are held in position by three retainers bolted to the outer face of the frame.
Window panel assembly:
The window panel assembly is made of several panes of different materials.

G7508471 - G3NT1T0 - FM51D4000000001

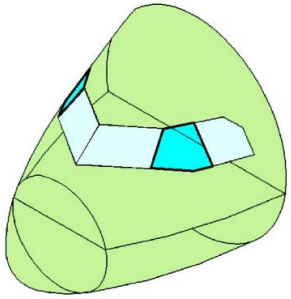

WINDOW PANEL ASSEMBLY EXAMPLE

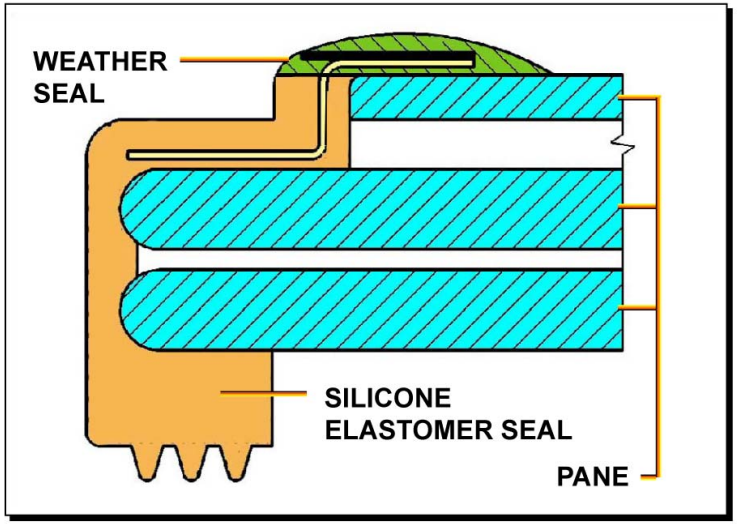

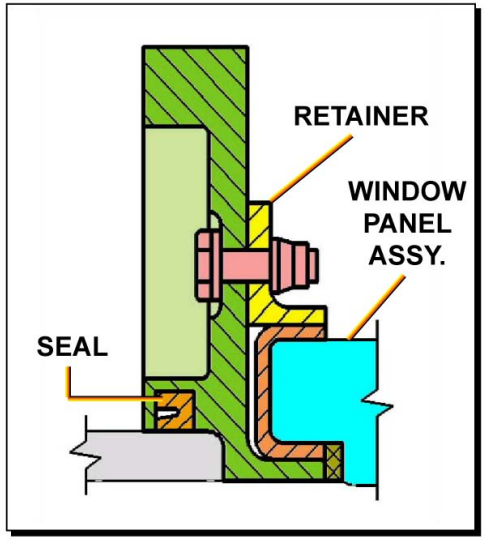

SECTION B-B

SECTION A-A

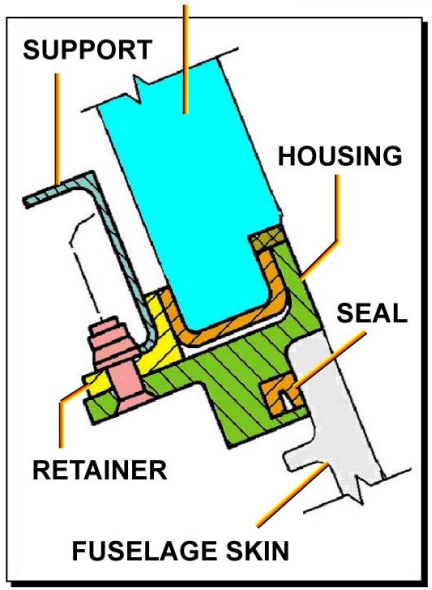

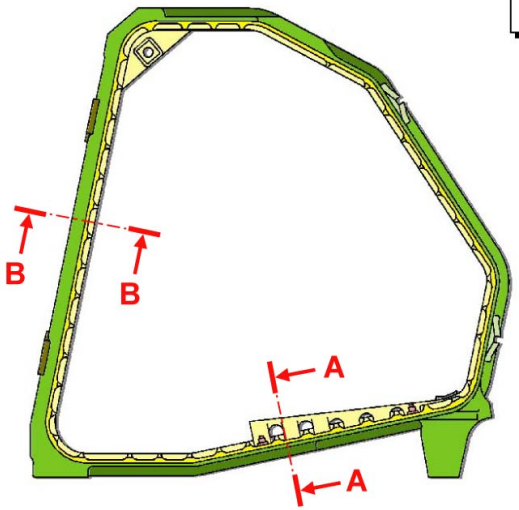

COCKPIT WINDOWS - SLIDING WINDOWS

G7508471 - G3NT1T0 - FM51D400000001

WINDOWS D/O (3)

CABIN WINDOWS - GENERAL ARRANGEMENT

The windows are installed in window frames and make a smooth surface with the fuselage skin.
The cabin windows are installed and removed from inside the aircraft.
Cabin Windows:
The cabin windows are installed in the seating areas of the cabin.
A retainer ring, eye-bolts and nuts, hold each cabin window in a window frame.
Each window panel assembly has an inner pane and a outer pane which are made from acrylic resin.
There is a small hole (vent hole) in the bottom part of the inner pane.
This lets the pressure between the two panes stay the same as that in the cabin.
Cabin Dummy Windows (not shown):
In areas of the cabin where equipment and furnishings (e.g. galleys and lavatories etc.) are located, cabin dummy windows are installed.
A retainer ring, eye-bolts and nuts, hold each cabin dummy window in a window frame.

G7508471 - G3NT1T0 - FM51D4000000001

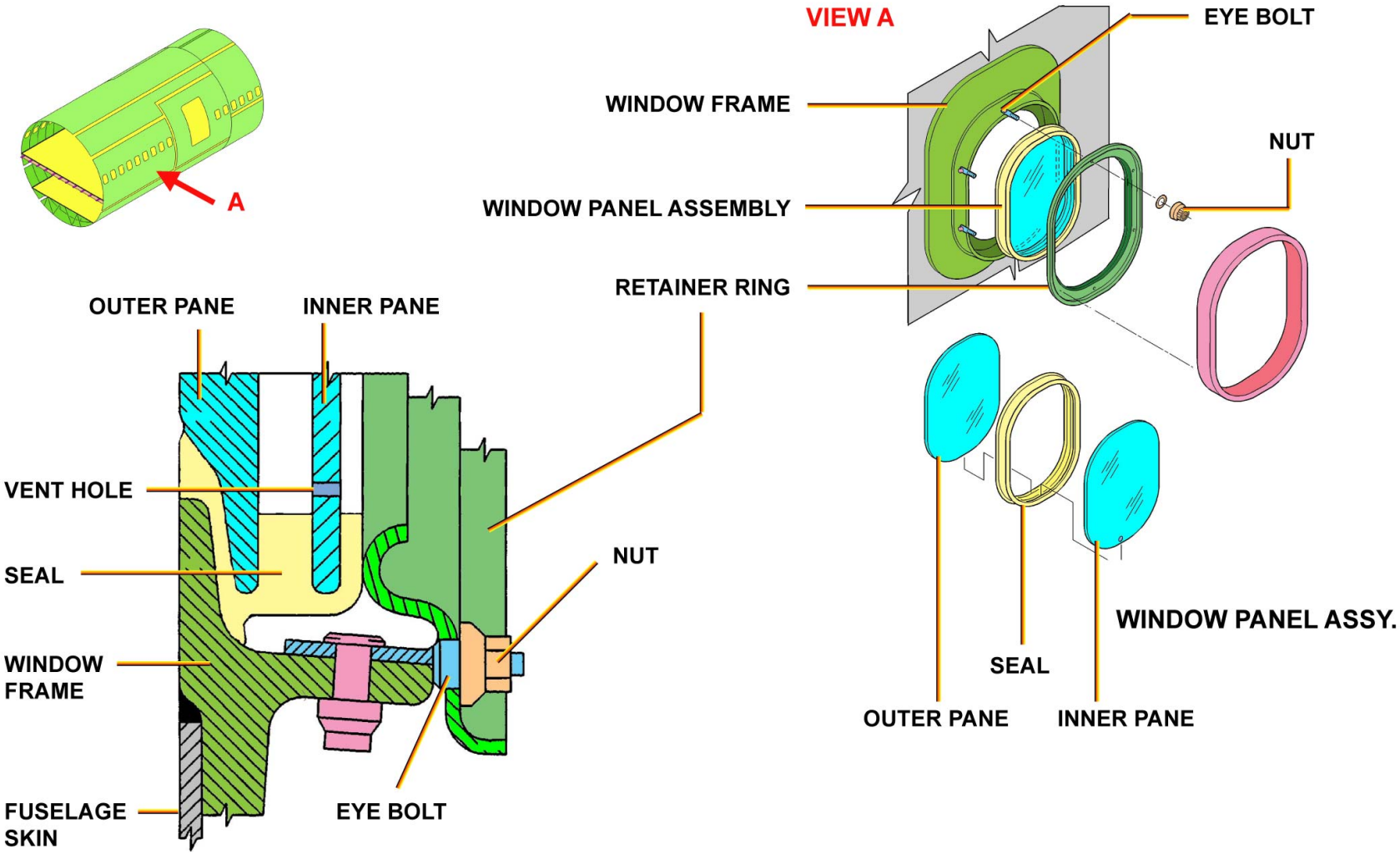

CABIN WINDOWS - GENERAL ARRANGEMENT

WINDOWS D/O (3)

DOOR WINDOWS - STRUCTURE LAYOUT

The passenger / crew doors and emergency exit doors have a circular window, which is installed in a window frame. These windows are used for inspection and observation.
Each door window is installed near the inner handle. It is installed in a window frame, which is attached to the outer skin of the door. A retainer ring holds the door window in a window frame.
Each window panel assembly as an inner pane and a outer pane which are made from acrylic resin.
There is a small hole (vent hole) in the bottom part of the inner pane. This lets the pressure between the two panes stay the same as that in the cabin.

G7508471 - G3NT1T0 - FM51D4000000001

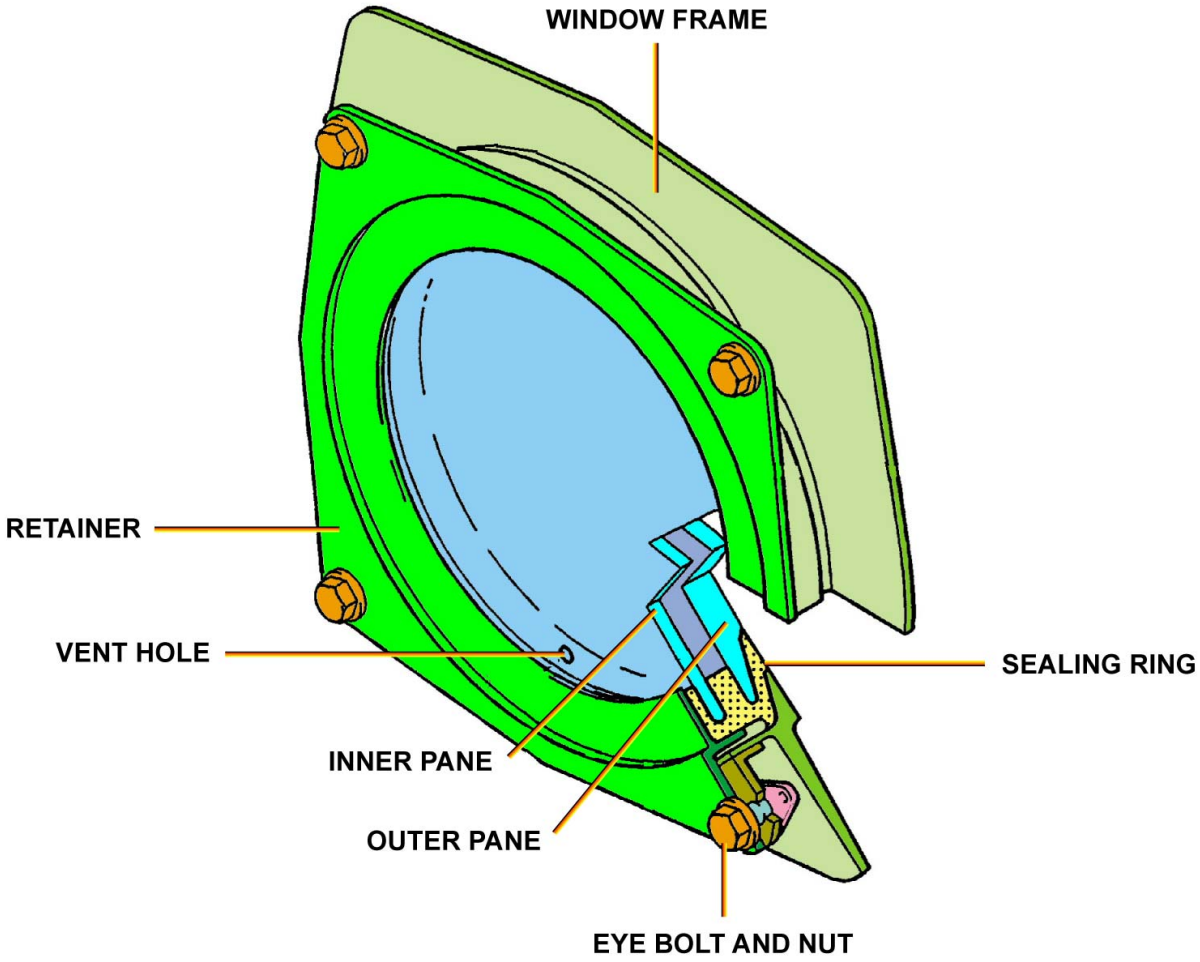

DOOR WINDOWS - STRUCTURE LAYOUT

G7508471 - G3NT1T0 - FM51D400000001

WINGS D/O (3)

GENERAL

The aircraft wing is a continuous structure going through the fuselage and is divided into three parts:
- the center wing,
- the left outer wing,
- and the right outer wing.

The center wing box supplies cantilever attachment for the outer wings and applies its loads onto the fuselage structure.

G7508471 - G3NT1T0 - FM51DK000000001

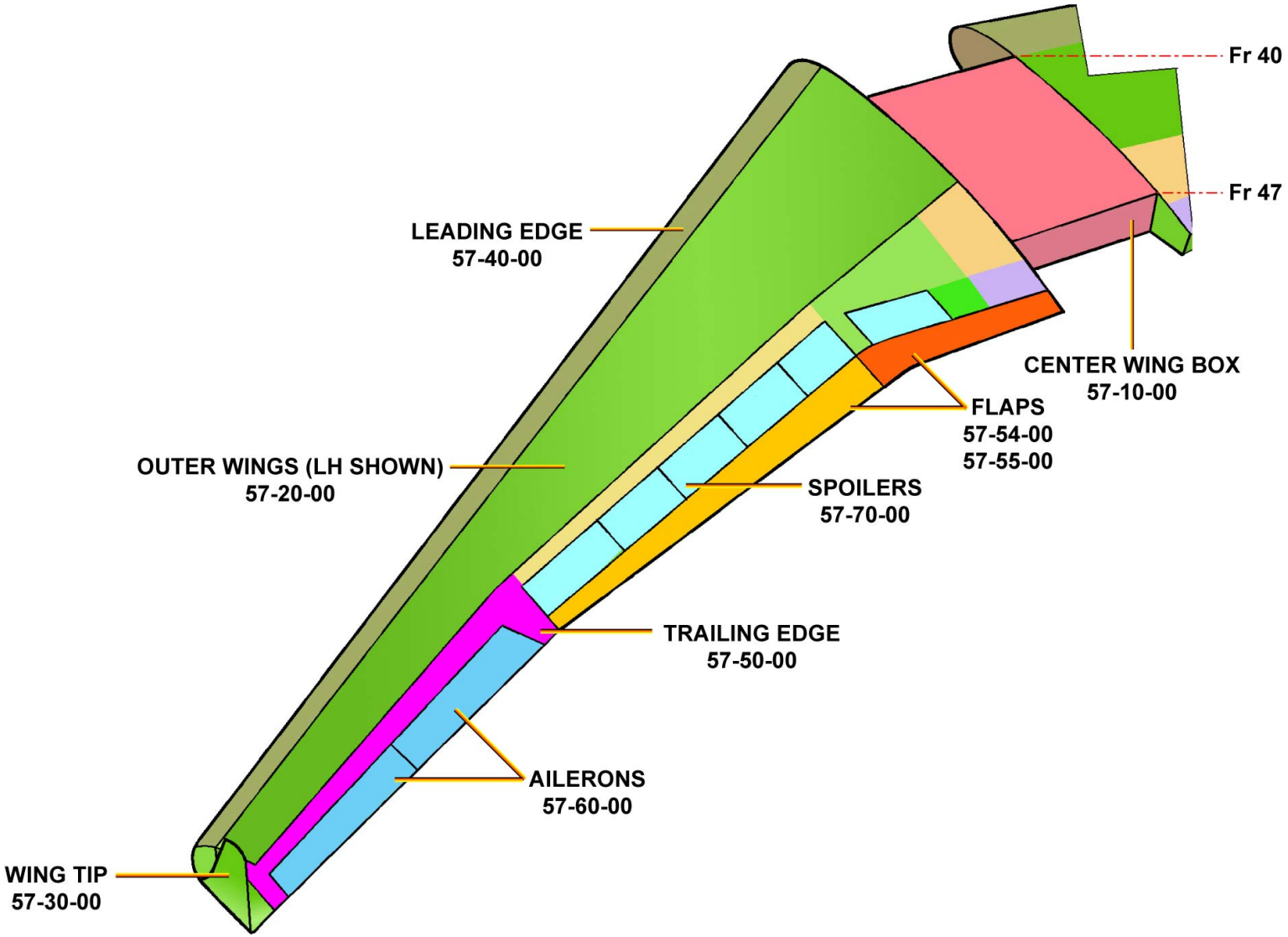

GENERAL

G7508471 - G3NT1T0 - FM51DK000000001

WINGS D/O (3)

CENTER WING BOX

GENERAL ARRANGEMENT

The center wing is installed in the center fuselage between the main Frames 40 and 47, and makes an integral fuel tank.
The center wing box structure includes:
- the front, center and rear spars respectively located at frames (Fr) 40, 42 and 47,
- top and bottom skin panels,
- the two main frames 40 and 47,
- internal carbon-fiber rods,
- the left rib 1 and the right rib 1,
- frame connection fittings,
- longitudinal beams.

There are two triangular openings in the rear spar to enable the access for maintenance.

G7508471 - G3NT1T0 - FM51DK000000001

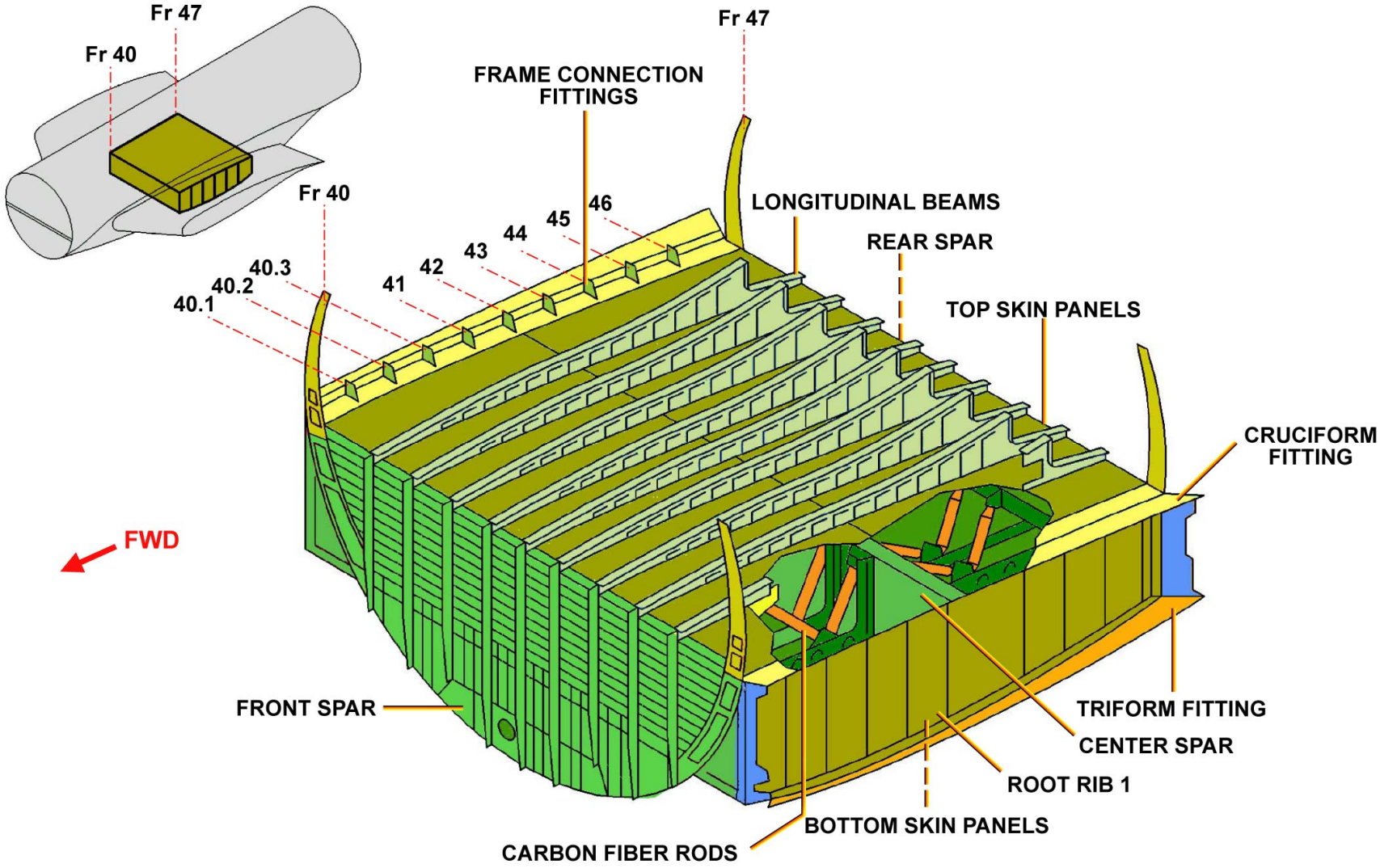

CENTER WING BOX - GENERAL ARRANGEMENT

G7508471 - G3NT1T0 - FM51DK00000001

WINGS D/O (3)

CENTER WING BOX (continued)

WING ROOT JOINT

The outer wing boxes are connected to the center wing box at Rib 1.
An upper cruciform fitting makes the junction between:
- the center wing box and the outer wing box top skin panels,
- the fuselage and Rib 1.

A lower triform fitting makes the junction between center wing box panels, outer wing box bottom skin panels and Rib 1. The assembly is secured by a lower butt-strap.

G7508471 - G3NT1T0 - FM51DK000000001

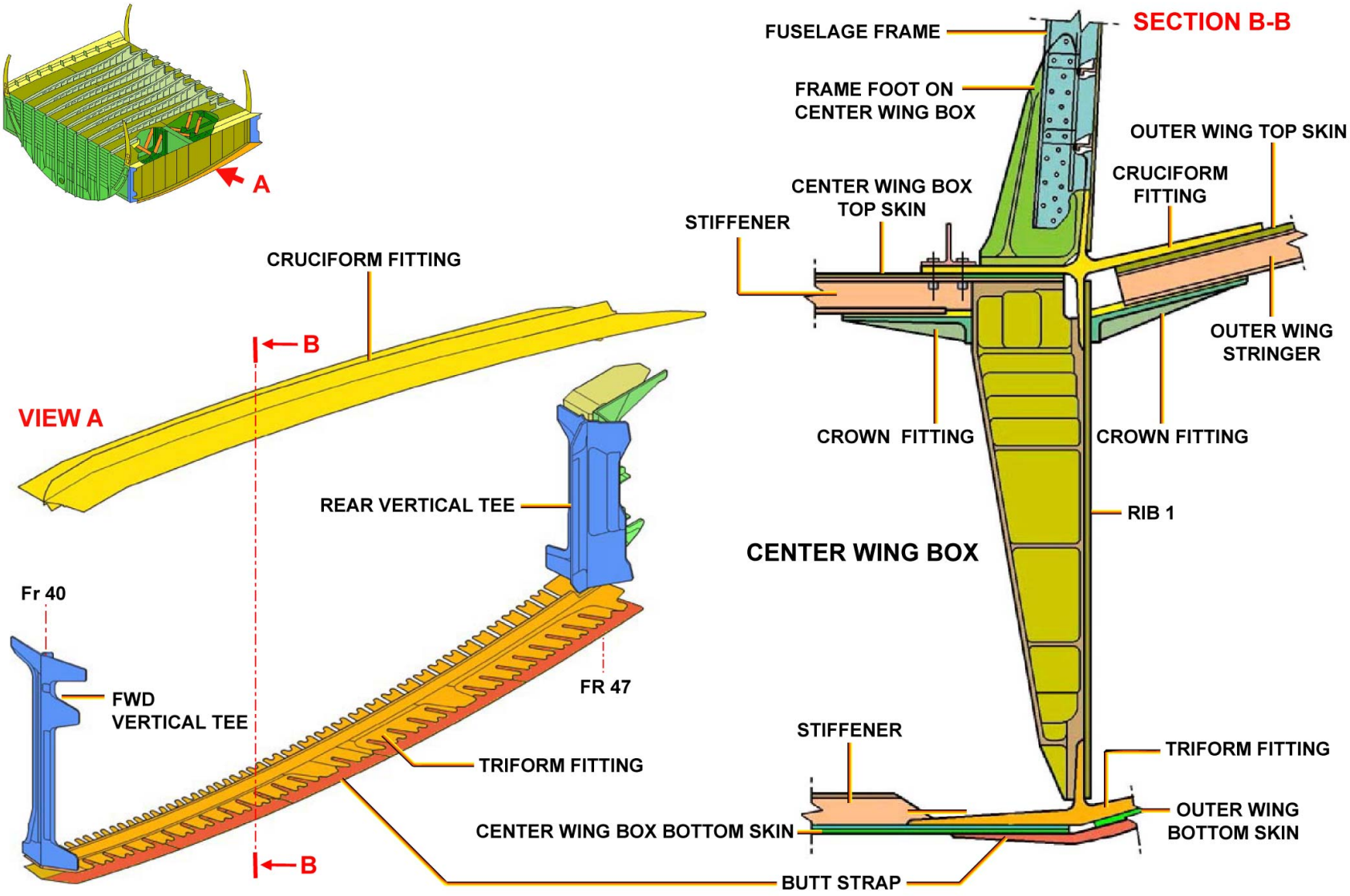

CENTER WING BOX - WING ROOT JOINT

G7508471 - G3NT1T0 - FM51DK00000001

WINGS D/O (3)

OUTER WING BOX

GENERAL ARRANGEMENT

The wing box tapers from Rib 1 (part of the center wing box) to Rib 39 includes:
- wing spars (front, center and rear),
- ribs,
- top and bottom skin panels,
- top and bottom stringers.

G7508471 - G3NT1T0 - FM51DK000000001

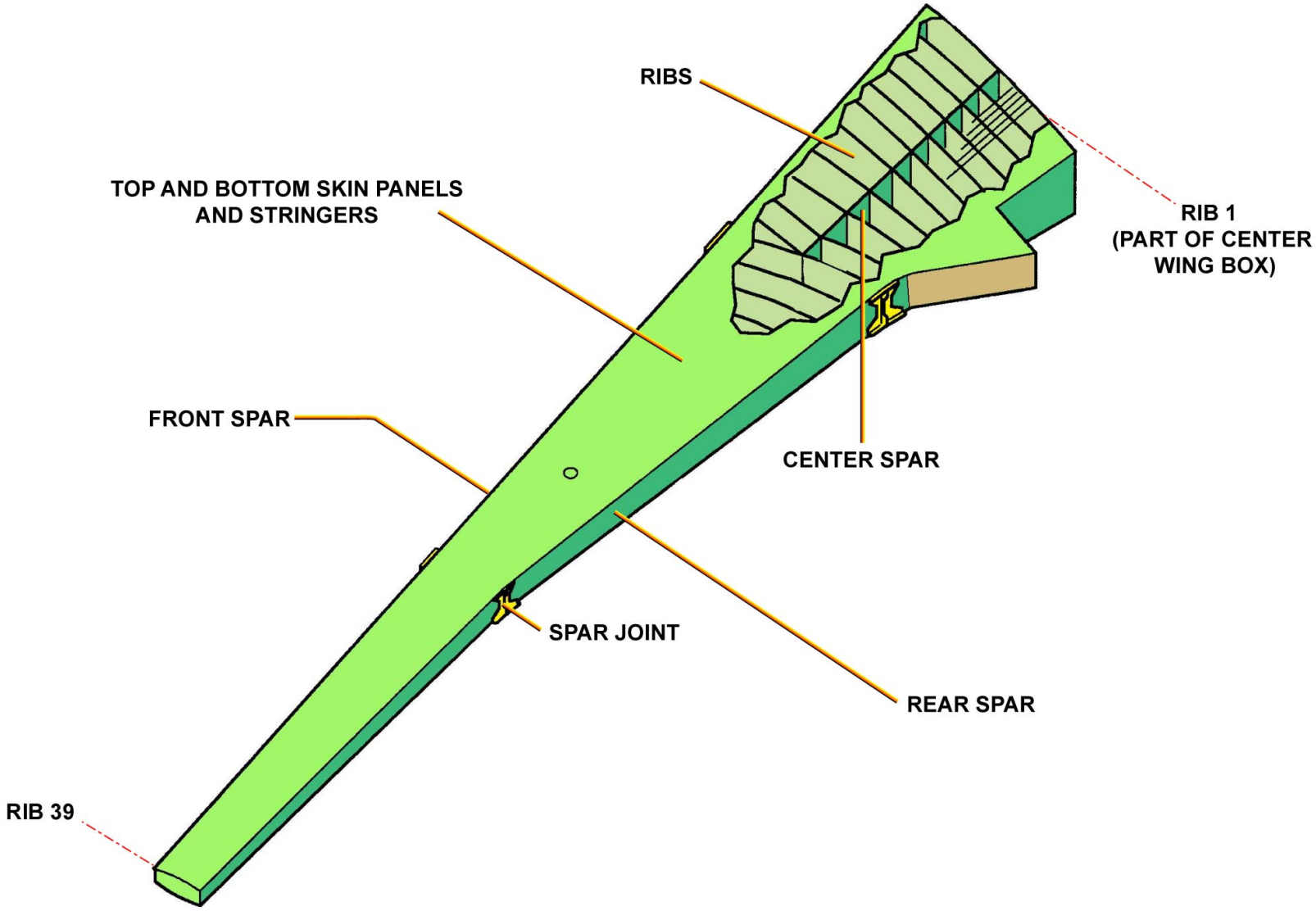

OUTER WING BOX - GENERAL ARRANGEMENT

G7508471 - G3NT1T0 - FM51DK000000001

WINGS D/O (3)

OUTER WING BOX (continued)

STRUCTURE LAYOUT

Each outer wing box top and bottom skins include four integrally machined panels. The center skins run from the root to Rib 27. The top and bottom skin panels extend on a short distance in the front of the front spar and provide part of the attachment for the fixed leading edge structure. Behind the rear spar, the rear skin panel extends towards the aft end of the main landing gear pick-up forging, and makes the top and bottom skins of the cantilever box structure. The top and bottom skins are stiffened by machined stringer profiles. There are thirty-three openings (manholes), in the No. 2 and No. 4 bottom skin panels, which give access into the outer wing box. To get stronger bottom skin panels, these panels are made thicker in the area around the manholes (and the holes for the fuel pumps).

The wing spars are machined from aluminum alloy. They give strength to the wing box. The front and the rear spars extend from Rib 1 to Rib 39. The center spar extends from Rib 1 to outboard of Rib 11. The front and the rear spars are made of three parts (inner, mid and outer spars). Joint plates connect these spars together to make a continuous structure. The front spar joints are located at Ribs 12 and 27. The rear spar joints are located at Ribs 9 and 27.

There are thirty-eight ribs, machined from aluminum alloy, installed in the wing box of each outer wing (Ribs 2 thru 39). The center wing-to-outer wing joint is made at Rib 1. Rib 1 is the rib that closes the center wing box.

G7508471 - G3NT1T0 - FM51DK000000001

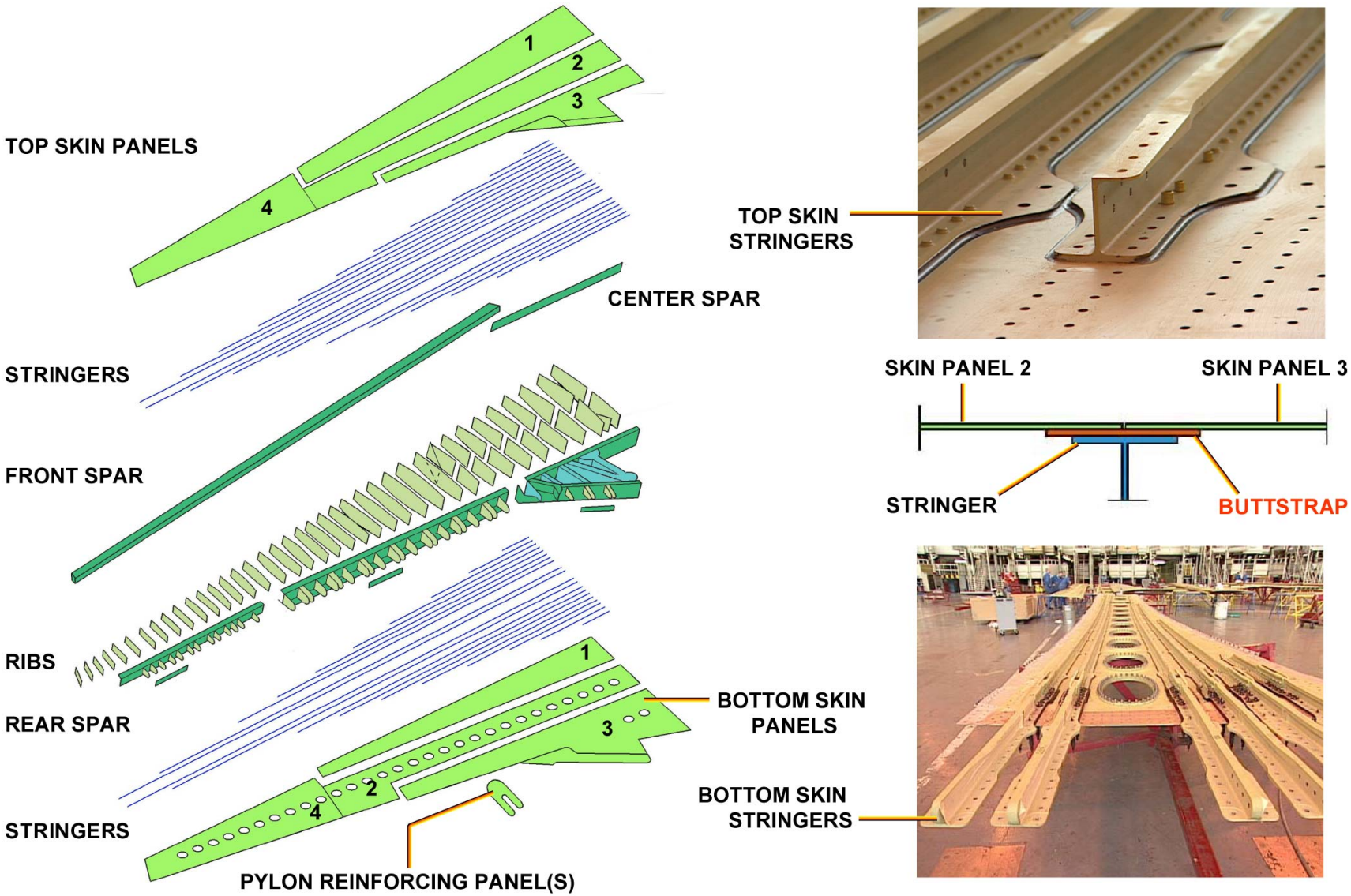

OUTER WING BOX - STRUCTURE LAYOUT

WINGS D/O (3)

OUTER WING BOX (continued)

ACCESS HOLES / COVERS

There are thirty-three access covers (panels) installed in the bottom skin panels of the wing box. This number includes the NACA duct door and the bursting disc panel. All the panels close the openings that give access to the wing box. Bolts attach the load-carrying access panels to the bottom skin panels of the wing. Bolts and clamp rings attach the non-load carrying panels to the bottom skin panels of the wing.

There are:

- twenty-one non load-carrying access panels between Rib 1 and Rib 27,
- eleven load-carrying access panels between Rib 27 and Rib 39.

G7508471 - G3NT1T0 - FM51DK000000001

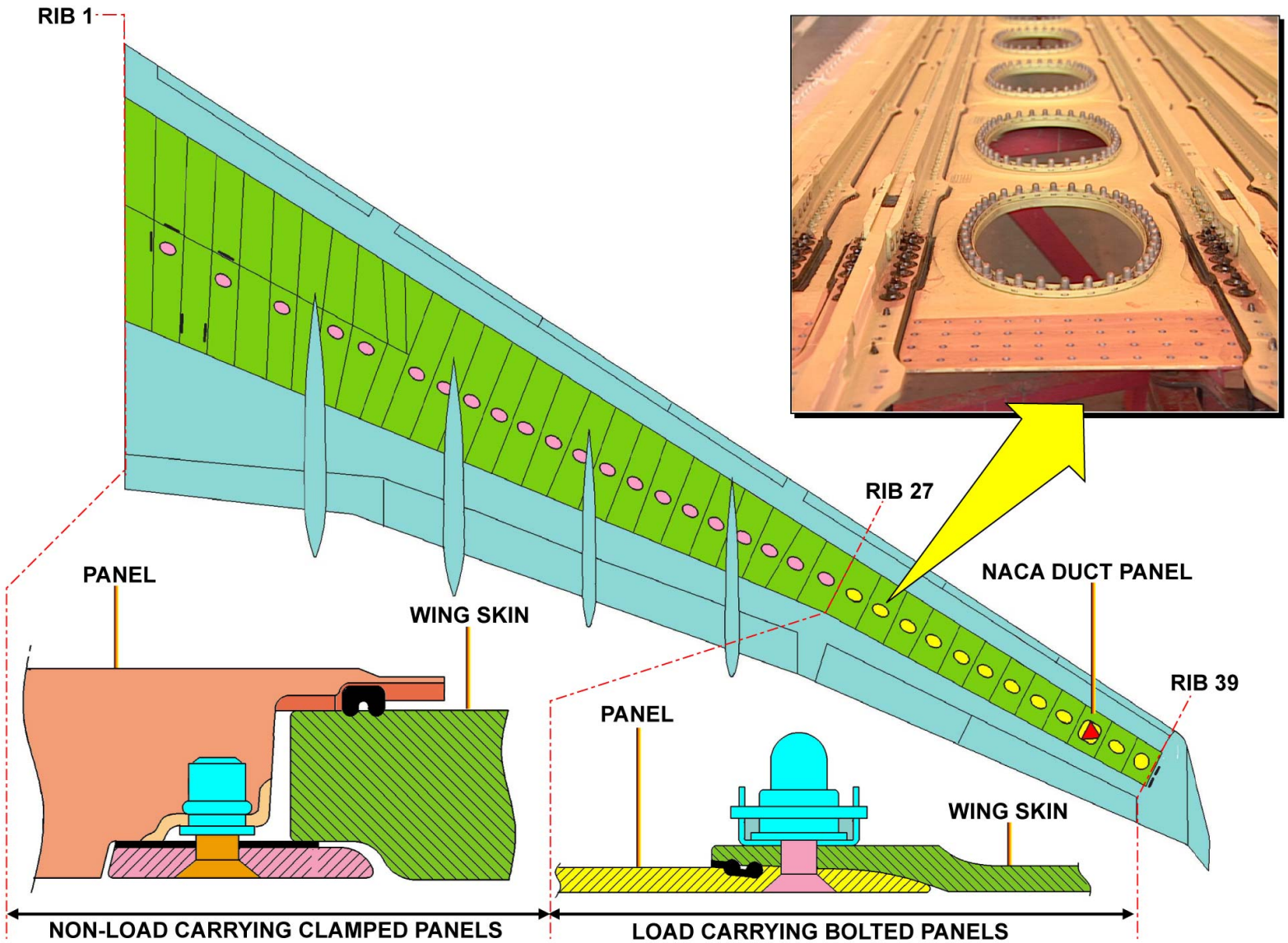

OUTER WING BOX - ACCESS HOLES / COVERS

G7508471 - G3NT1T0 - FM51DK000000001

WINGS D/O (3)

OUTER WING BOX (continued)

MAIN LANDING GEAR ATTACHMENT STRUCTURE

The Main Landing Gear (MLG) is attached to the wing box structure via the following fittings:
- the gear support rib (gear rib 6), which makes the aft attachment,
- the pintle fitting, which makes the forward attachment,
- the fitting for the side stay (side stay attachment fitting),
- the jack fitting for the MLG actuating cylinder (retraction jack fitting).

The gear support rib is machined from an aluminum alloy forging and is attached to:
- the aft face of the rear spar at Rib 6,
- the extended top and bottom wing skin panels,
- the false rear spar.

The pintle fitting is made from titanium alloy and attached at Rib 5.
The side-stay fitting is made from aluminum alloy and is attached between Rib 2 and Rib 3.

G7508471 - G3NT1T0 - FM51DK000000001

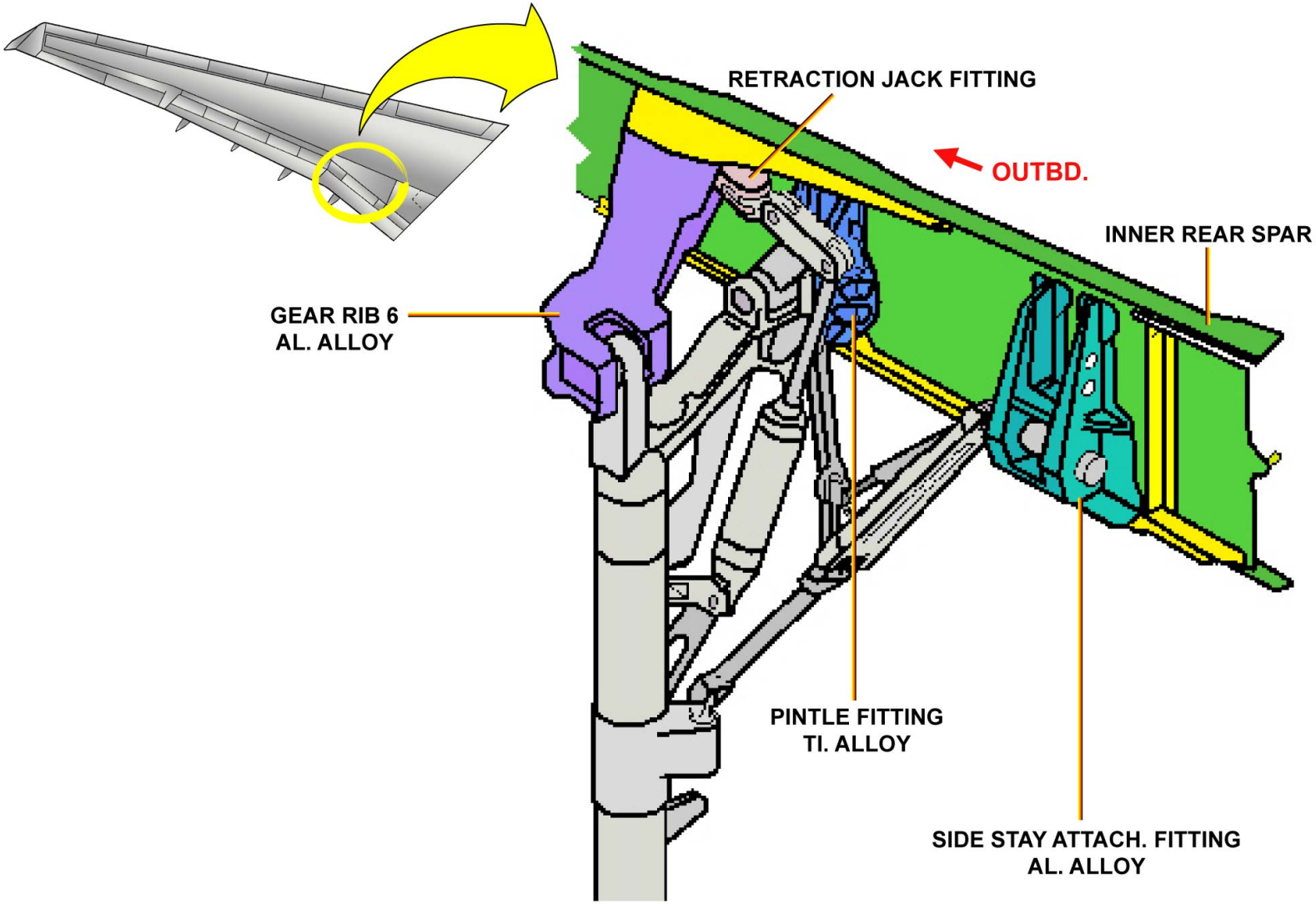

OUTER WING BOX - MAIN LANDING GEAR ATTACHMENT STRUCTURE

G7508471 - G3NT1T0 - FM51DK000000001

WINGS D/O (3)

OUTER WING BOX (continued)

PYLON ATTACHMENT STRUCTURE

There are forward and rear attachment fittings on the wing box for each engine pylon.

Forward attachment fittings are at the front spar, between Ribs 10 and 10A for the inboard pylon, and near Rib 25 for the outboard pylon (on the A340 only). The forward attachment for the pylon has a bracket assembly that absorbs the vertical loads and a thrust fitting (spigot fitting) that absorbs thrust and side loads from the engine.

The bracket assembly, made of titanium alloy, is attached to the forward face of the front spar and the top skin of the wing (the skin extends forward of the front spar).

The thrust fitting is made of titanium alloy and has a steel pin. Bolts attach the fitting to the bottom face of the bracket assembly through the reinforcing and the bottom skin.

The rear attachment fittings are located between Ribs 10 and 10A (for the inboard pylon) and at Rib 26 (for the A340 outboard pylon).

The rear attachment is a single-lug bracket.

G7508471 - G3NT1T0 - FM51DK000000001

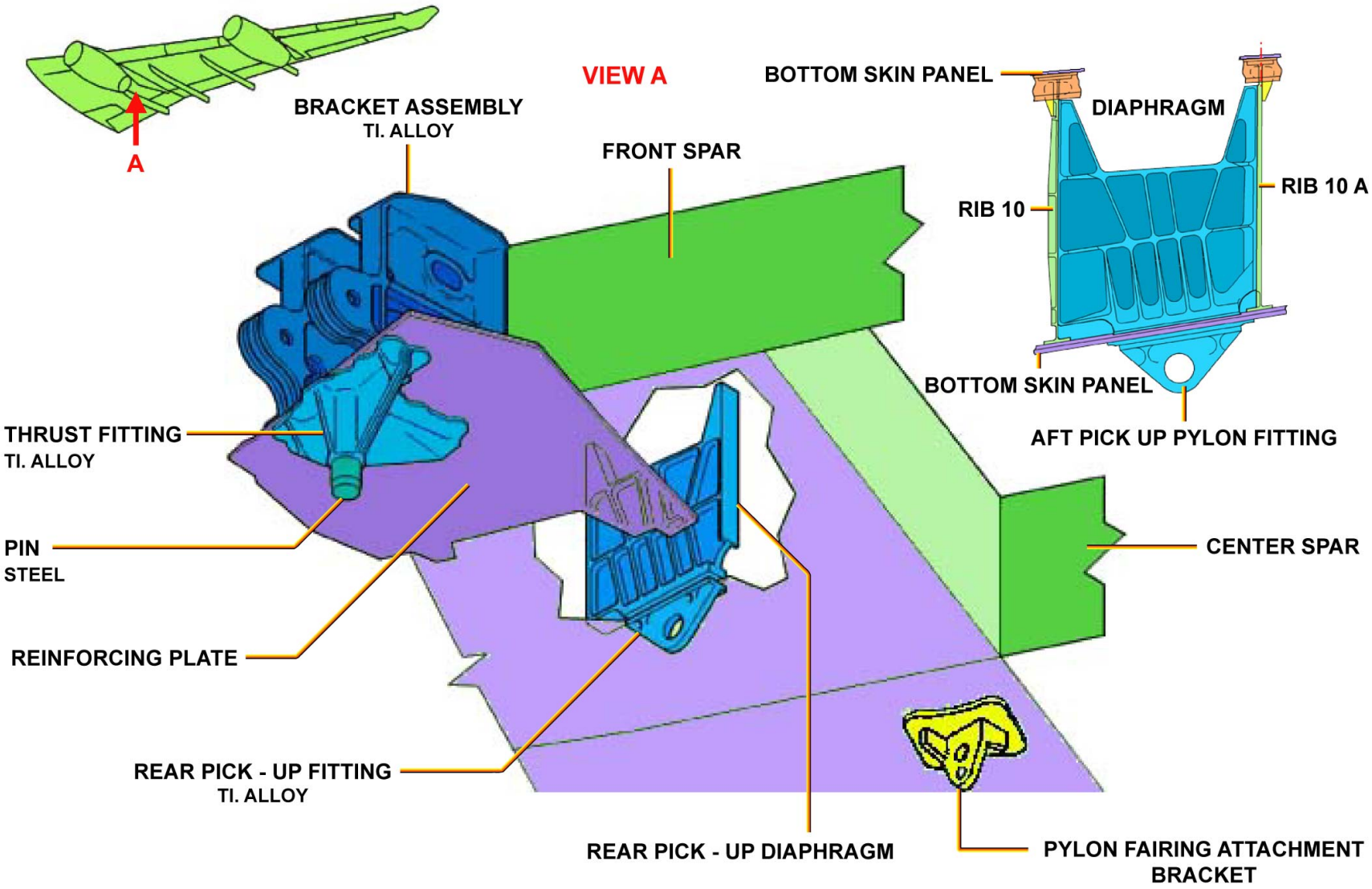

OUTER WING BOX - PYLON ATTACHMENT STRUCTURE

G7508471 - G3NT1T0 - FM51DK000000001

WINGS D/O (3)

FIXED LEADING EDGE

GENERAL ARRANGEMENT

The fixed leading edge (LE) assembly is located forward of the front spar of the wing box.
The fixed LE assembly has:
- the inboard fixed LE assembly (rib 1 to rib 10),
- and the outboard fixed LE assembly (rib 10 to rib 39).

G7508471 - G3NT1T0 - FM51DK000000001

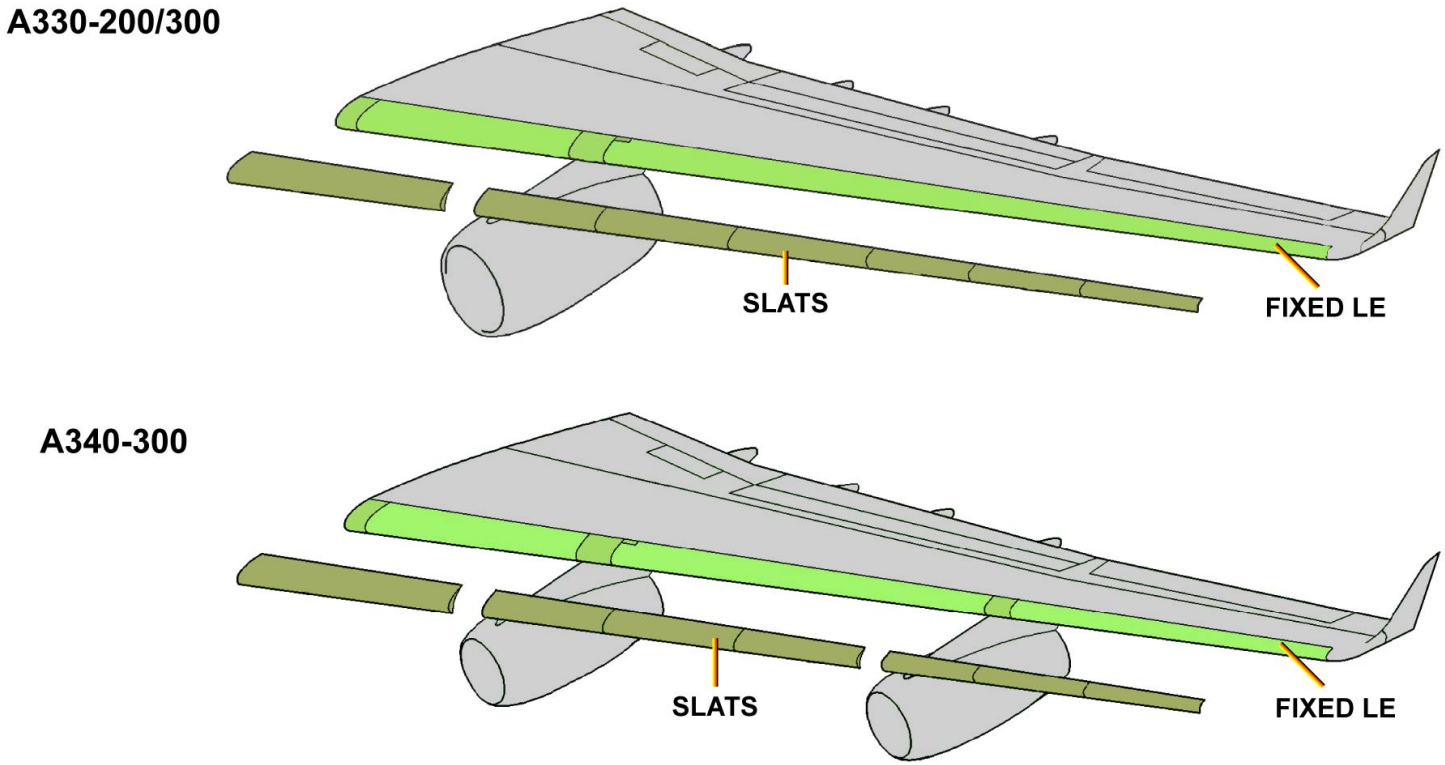

FIXED LEADING EDGE - GENERAL ARRANGEMENT

G7508471 - G3NT1T0 - FM51DK000000001

WINGS D/O (3)

FIXED LEADING EDGE (continued)

STRUCTURE LAYOUT

The inboard and outboard fixed leading edges have the same design, which includes:
- support ribs (closing ribs, track ribs, hold-down ribs, intermediate ribs,
- top and bottom panels made of composite sandwich material (with glass fiber skins),
- the D-nose assembly.

The D-nose assembly includes:
- the outer skin (which makes the shape of the D-nose),
- the sub-spar (which makes the aft face of the D-nose),
- the riblets (which are attached to the inside of the D-nose to strengthen the structure).

There are cutouts in the bottom half of the D-nose assembly at the slat track position.

G7508471 - G3NT1T0 - FM51DK000000001

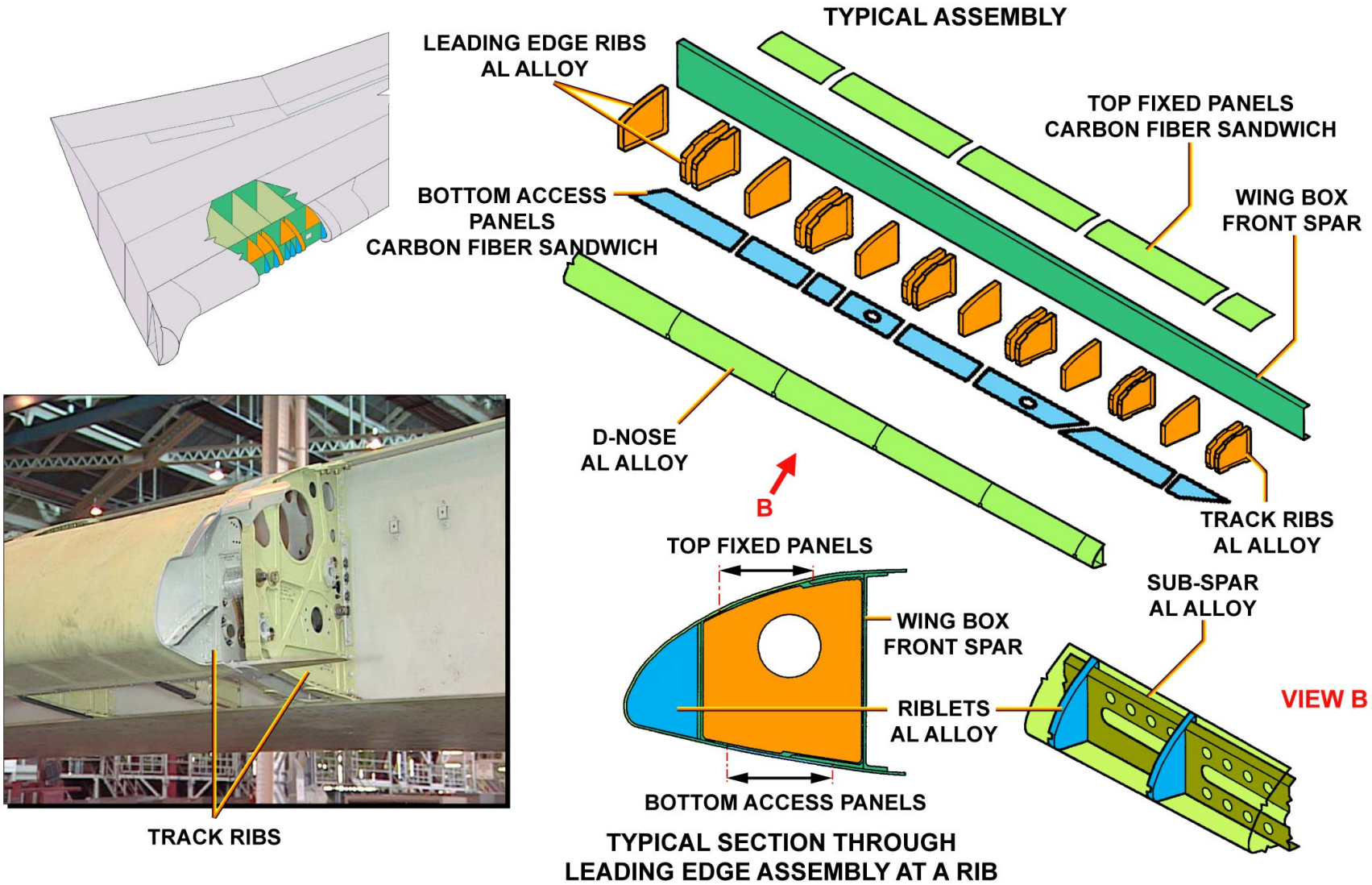

FIXED LEADING EDGE - STRUCTURE LAYOUT

G7508471 - G3NT1T0 - FM51DK000000001

WINGS D/O (3)

SLATS

GENERAL ARRANGEMENT

The wing leading edge is fitted with seven slats. Slats 4 to 7 are de-iced. The hot air comes from the bleed air system and is supplied to Slat 4 through a telescopic duct and piccolo tubes, installed in the leading edges of the slats.

G7508471 - G3NT1T0 - FM51DK000000001

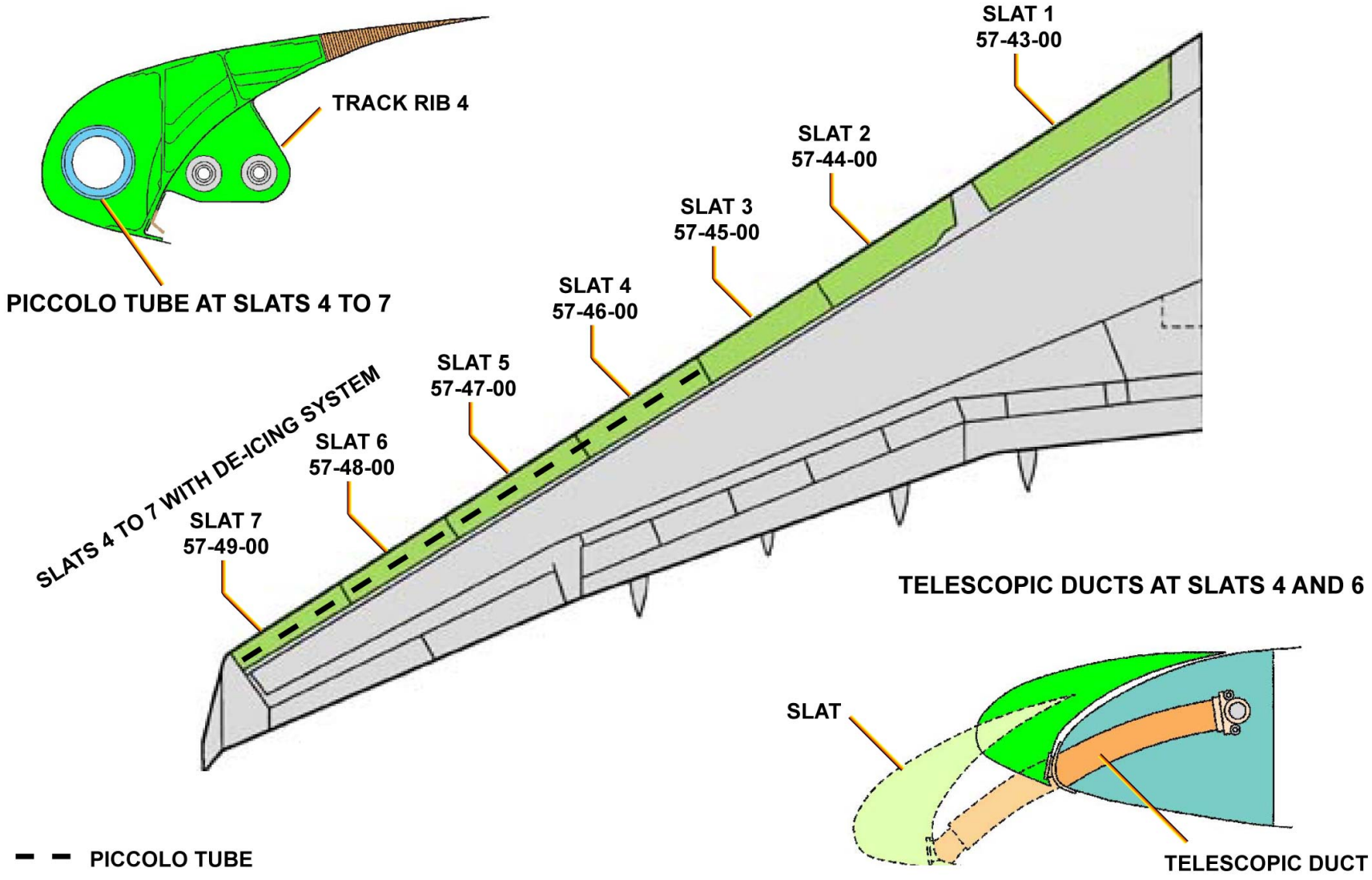

SLATS - GENERAL ARRANGEMENT

G7508471 - G3NT1T0 - FM51DK000000001

WINGS D/O (3)

SLATS (continued)

STRUCTURE LAYOUT

Slat 1 is supported by 4 tracks, two of them being driven (track 2 and 3). Slats 2 to 7 are supported by two tracks, both being driven.

G7508471 - G3NT1T0 - FM51DK000000001

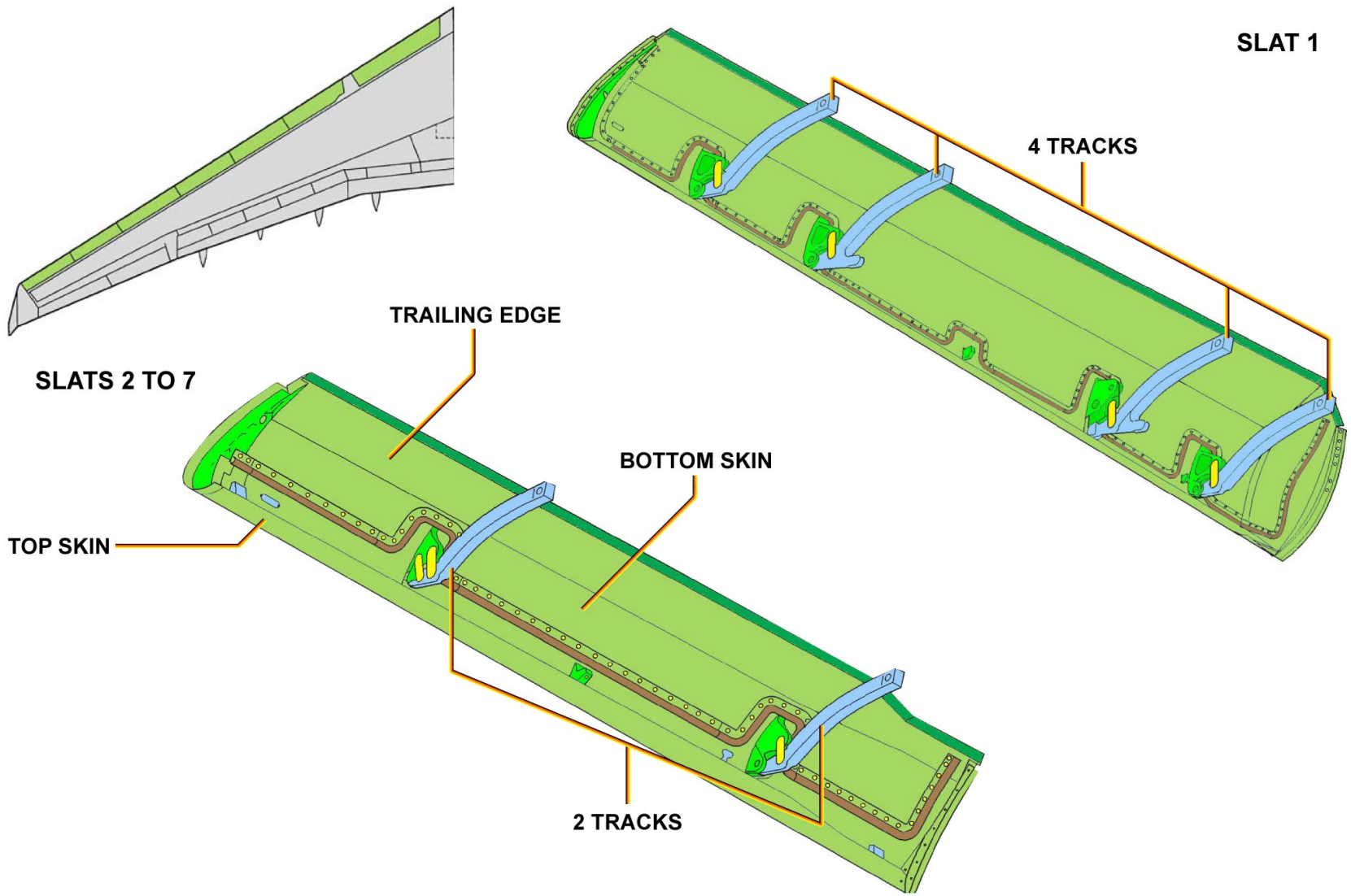

SLATS - STRUCTURE LAYOUT

G7508471 - G3NT1T0 - FM51DK000000001

WINGS D/O (3)

SLATS (continued)

TYPICAL CONSTRUCTION

Each leading edge slat includes:
- a front spar (for slats 4 to 7) or stringer(s) (for slat 1, 2 and 3),
- a rear spar,
- ribs,
- top and bottom skins with trailing edge assembly.

All these parts (except for the trailing edge assembly) are made of aluminum alloy. The trailing edge assembly is made from aluminum with a honeycomb core, and has a trailing edge extrusion of aluminum alloy. Because the slats 4 thru 7 have an ice protection system, some of the structure is made from a heat resistant alloy.

G7508471 - G3NT1T0 - FM51DK000000001

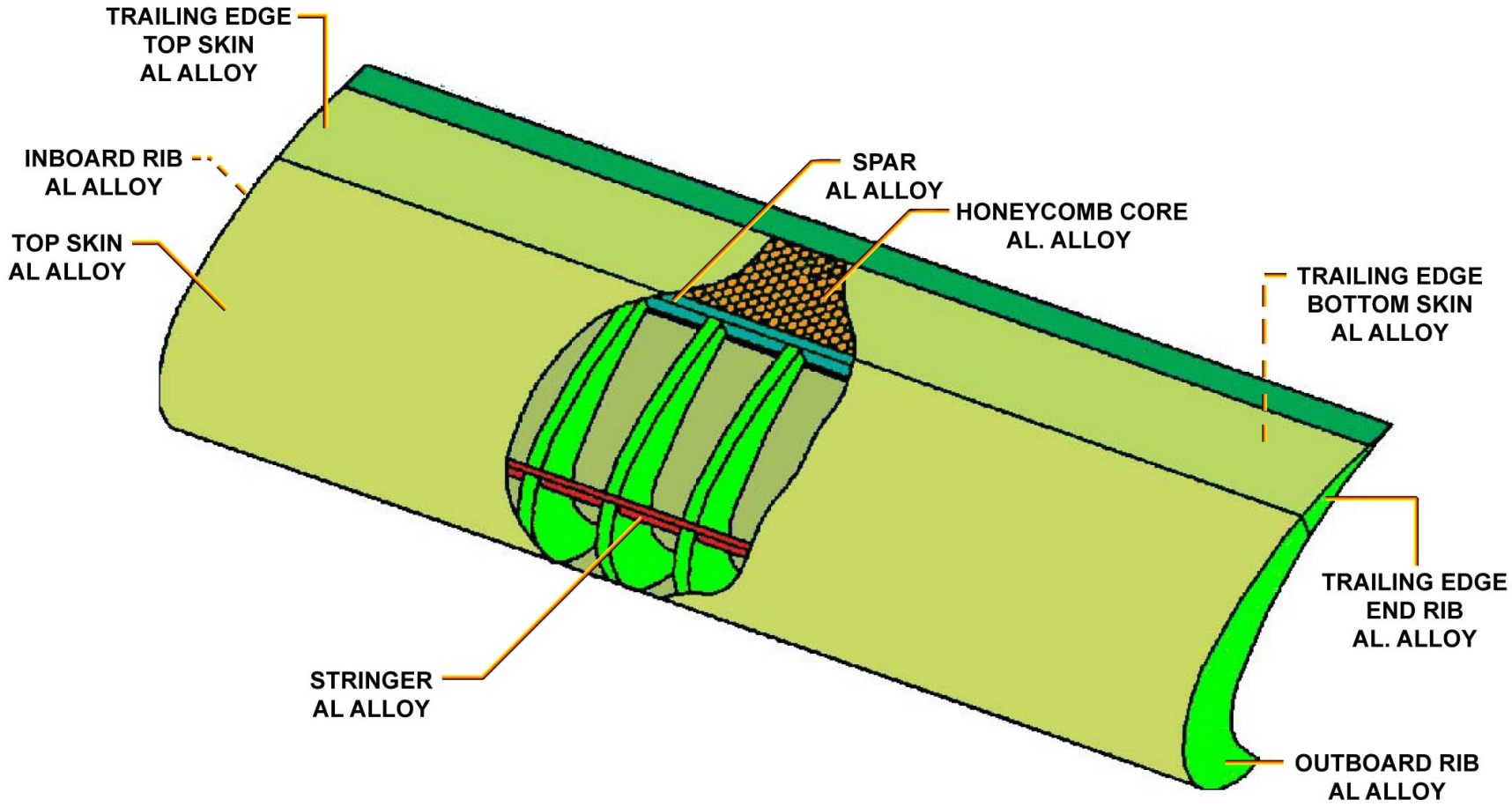

SLATS - TYPICAL CONSTRUCTION

G7508471 - G3NT1T0 - FM51DK000000001

WINGS D/O (3)

FIXED TRAILING EDGE

GENERAL ARRANGEMENT

The fixed trailing edge is that part of the wing structure which is aft of the wing rear spar. It is divided into three sections:
- the inner rear spar trailing edge from Rib 1 to Rib 9,
- the mid rear spar trailing edge from Rib 12 to Rib 27,
- and the outer rear spar trailing edge from Rib 27 to Rib 41.

G7508471 - G3NT1T0 - FM51DK000000001

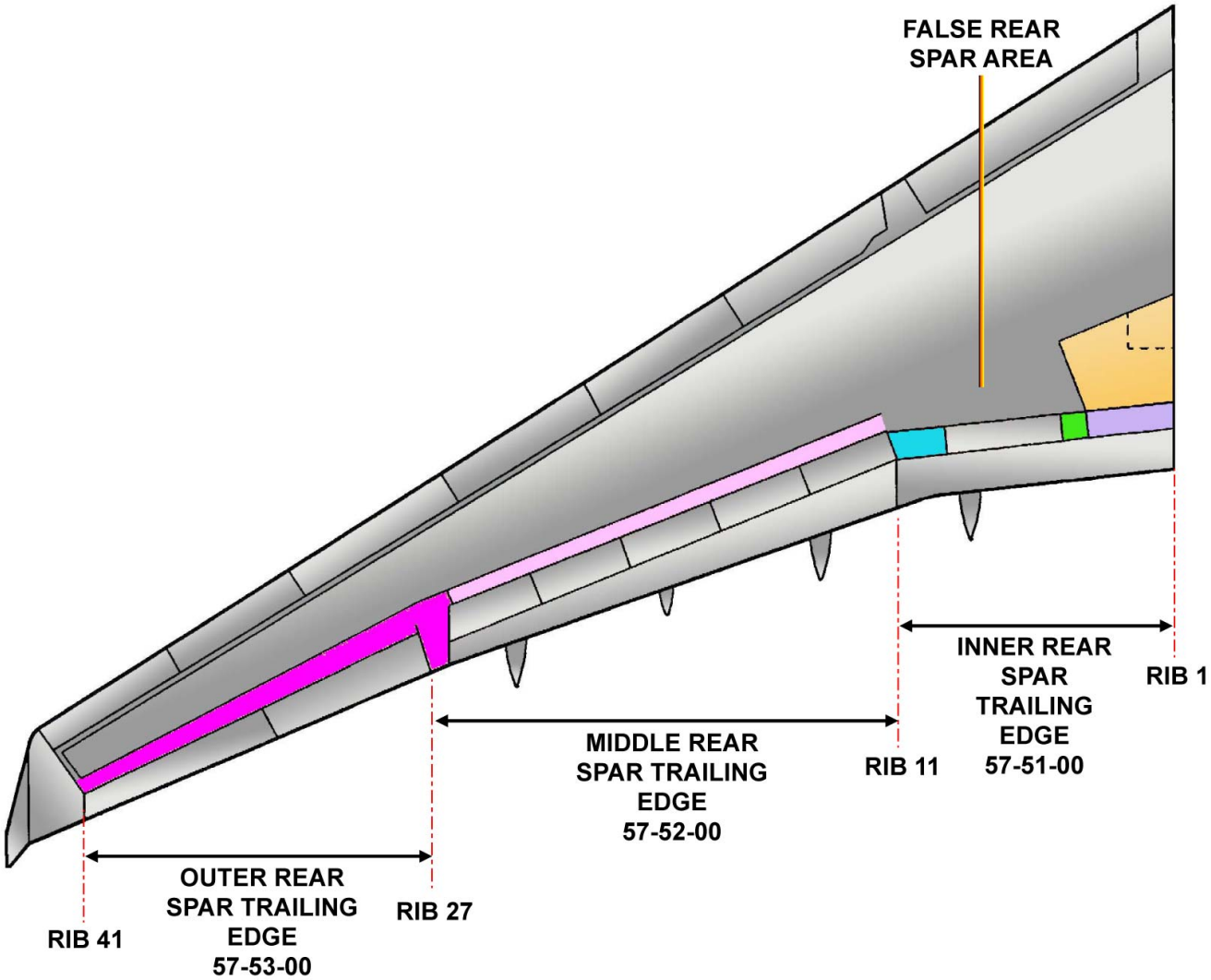

FIXED TRAILING EDGE - GENERAL ARRANGEMENT

G7508471 - G3NT1T0 - FM51DK000000001

WINGS D/O (3)

FIXED TRAILING EDGE (continued)

INNER REAR SPAR FIXED TRAILING EDGE

The structure of the inner spar fixed trailing edge includes:
- the shroud box,
- the overwing panel,
- the fixed inner shroud,
- the outboard shroud,
- the underwing fixed panel.

G7508471 - G3NT1T0 - FM51DK000000001

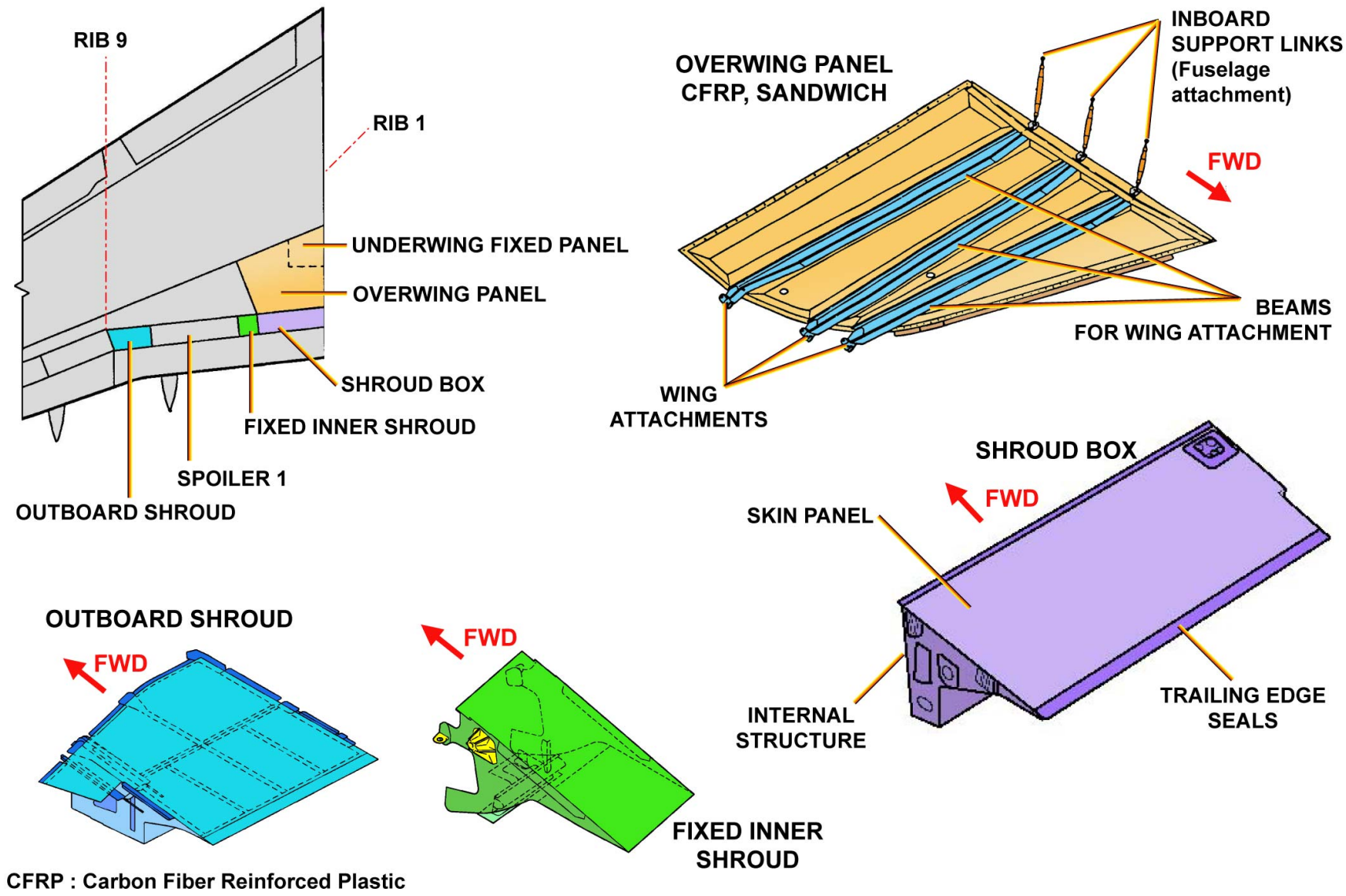

FIXED TRAILING EDGE - INNER REAR SPAR FIXED TRAILING EDGE

WINGS D/O (3)

FIXED TRAILING EDGE (continued)

MID REAR SPAR FIXED TRAILING EDGE

The mid rear spar fixed trailing edge structure includes:
- spoiler hinge ribs,
- common hinge ribs,
- intermediate ribs,
- spoiler actuator brackets,
- top and bottom panels.

G7508471 - G3NT1T0 - FM51DK000000001

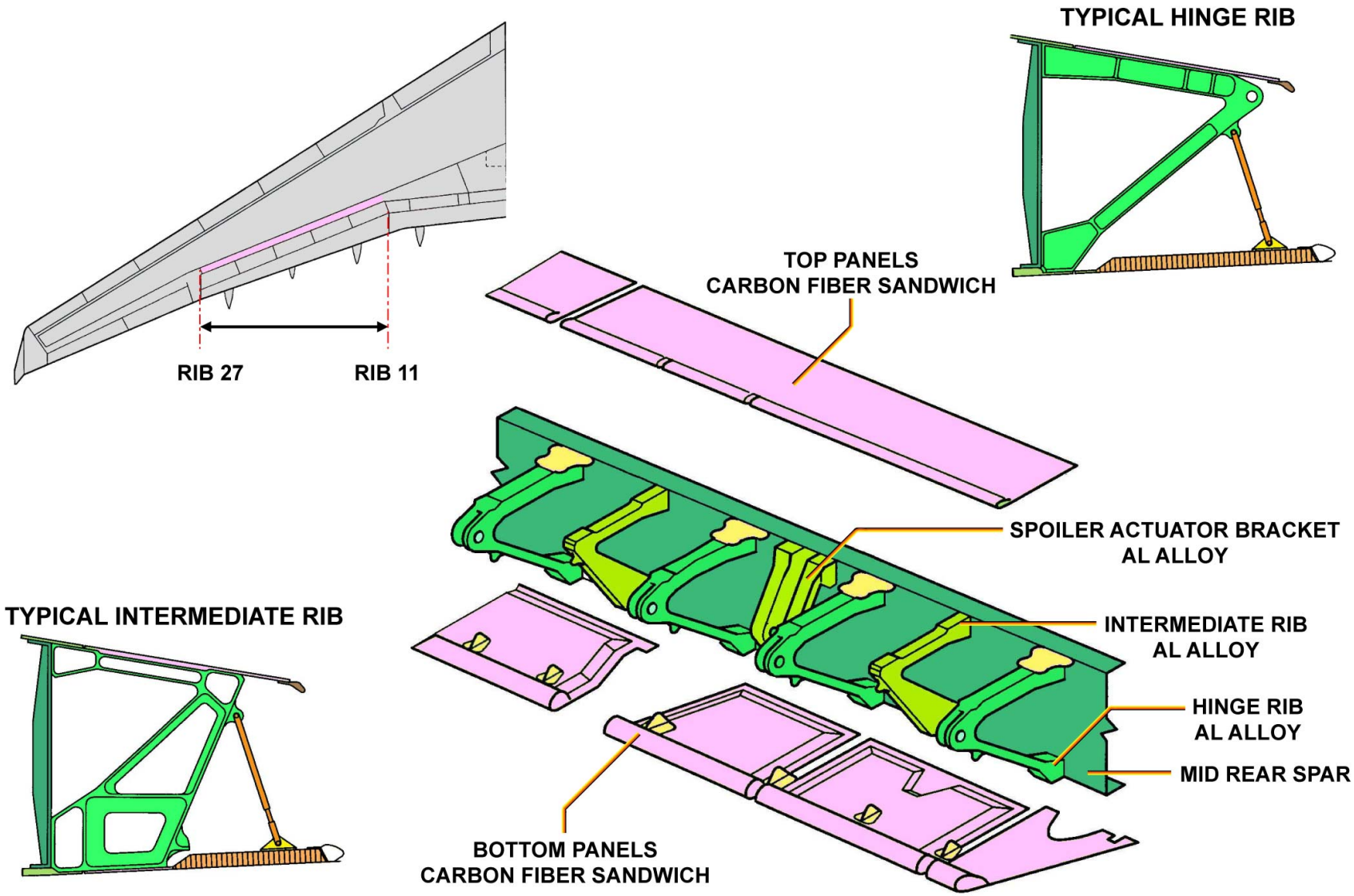

FIXED TRAILING EDGE - MID REAR SPAR FIXED TRAILING EDGE

G7508471 - G3NT1T0 - FM51DK000000001

WINGS D/O (3)

FIXED TRAILING EDGE (continued)

OUTER REAR SPAR FIXED TRAILING EDGE

The outer rear spar fixed trailing edge structure includes:
- aileron hinge ribs,
- intermediate ribs,
- one closing rib,
- aileron actuator brackets,
- top and bottom panels.

G7508471 - G3NT1T0 - FM51DK000000001

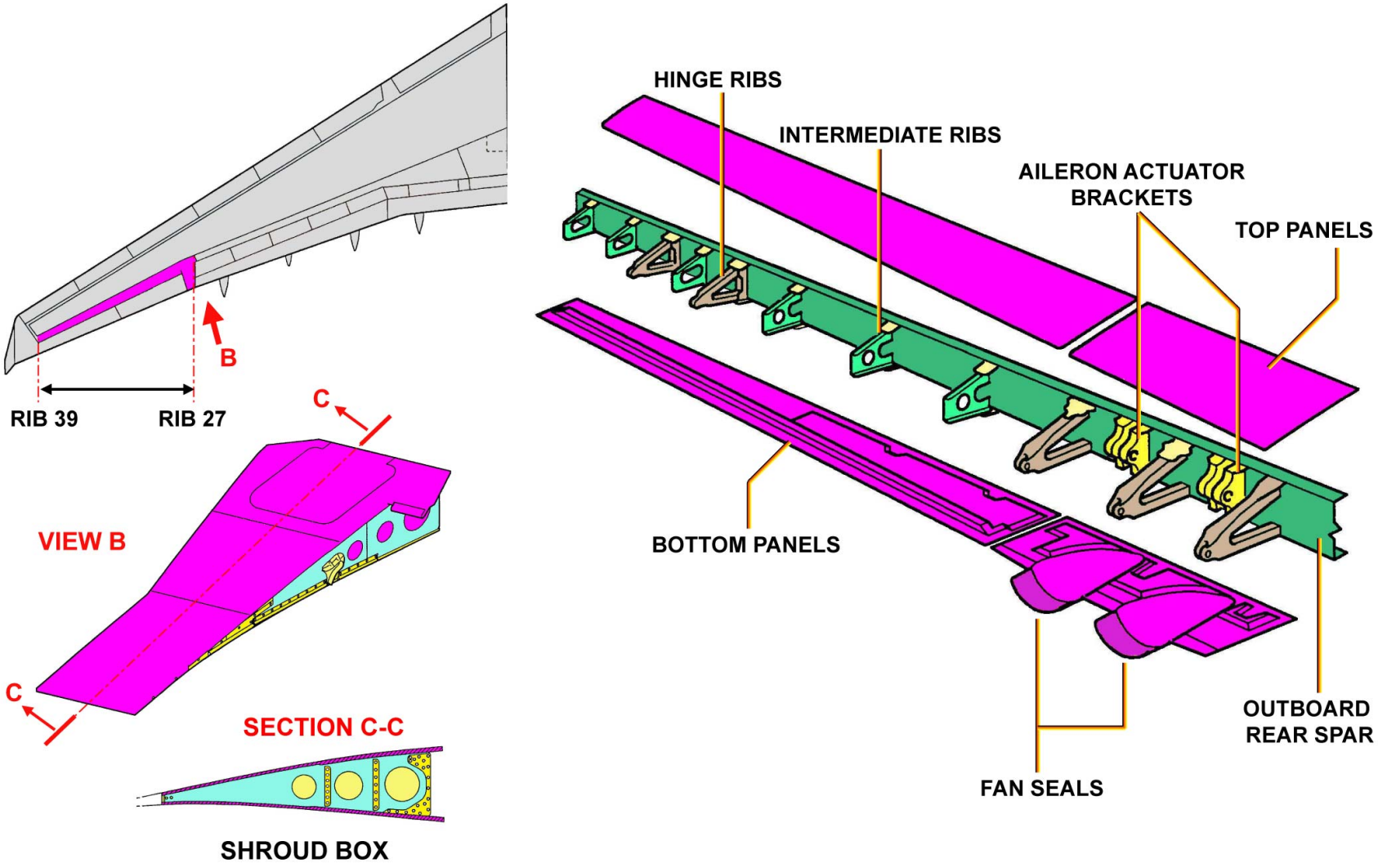

FIXED TRAILING EDGE - OUTER REAR SPAR FIXED TRAILING EDGE

G7508471 - G3NT1T0 - FM51DK000000001

WINGS D/O (3)

TRAILING EDGE DEVICES

GENERAL ARRANGEMENT

The Trailing Edge (TE) movable surfaces are:
- the inboard and outboard flaps,
- the two ailerons,
- and the six spoilers.

G7508471 - G3NT1T0 - FM51DK000000001

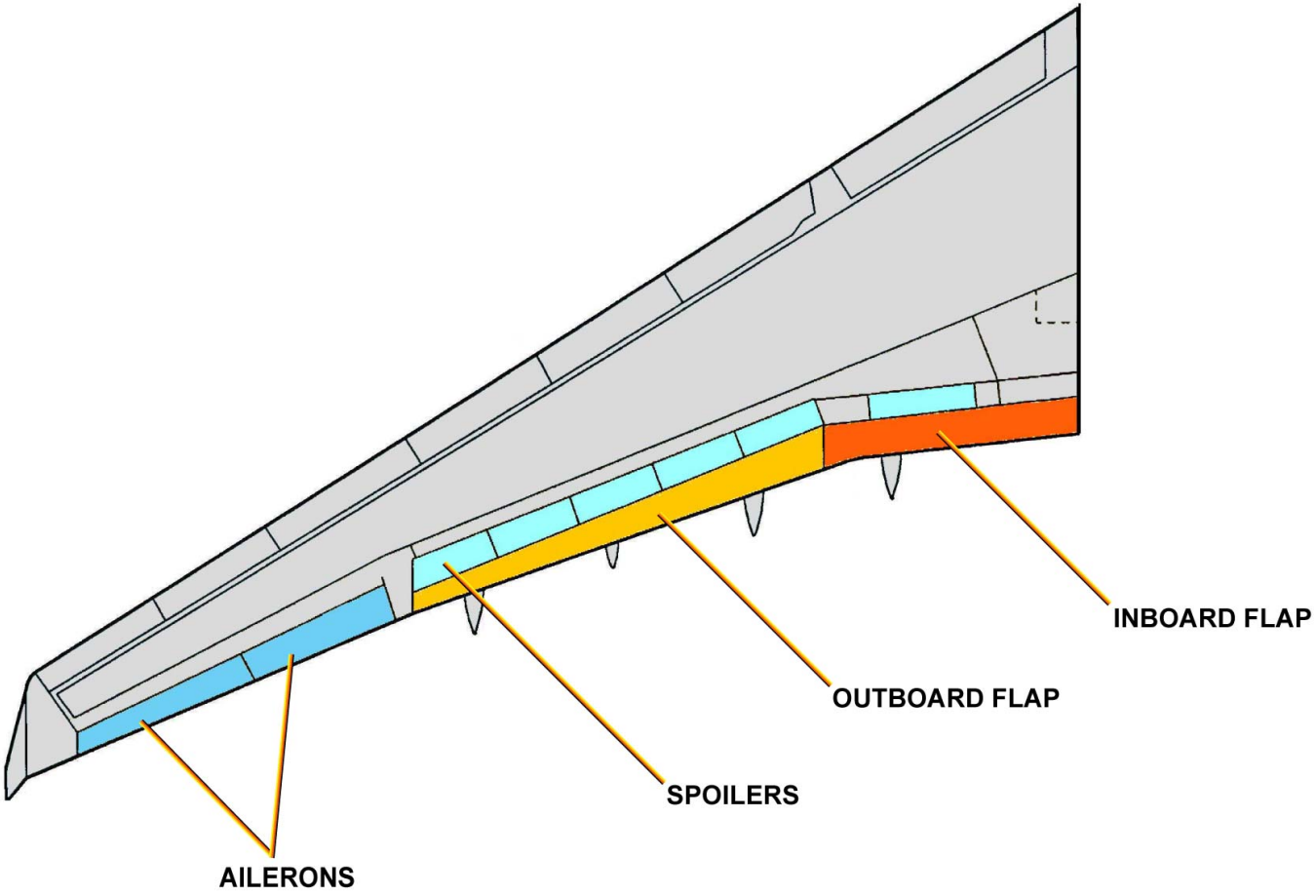

TRAILING EDGE DEVICES - GENERAL ARRANGEMENT

G7508471 - G3NT1T0 - FM51DK000000001

WINGS D/O (3)

TRAILING EDGE DEVICES (continued)

FLAPS - GENERAL ARRANGEMENT

Two single-element flaps are installed on the TE of the outer wing. An interconnection strut connects the inboard flap to the outboard flap. In case of a drive station failure, this device carries the loads.
The inboard flap is installed between Rib 1 and Rib 11. It is supported by an assembly attached to the fuselage (track 1) and another support assembly below the wing (track 2).
The outboard flap is installed between Ribs 11 and 27 and is supported by three assemblies below the wing (tracks 3 to 5).

G7508471 - G3NT1T0 - FM51DK000000001

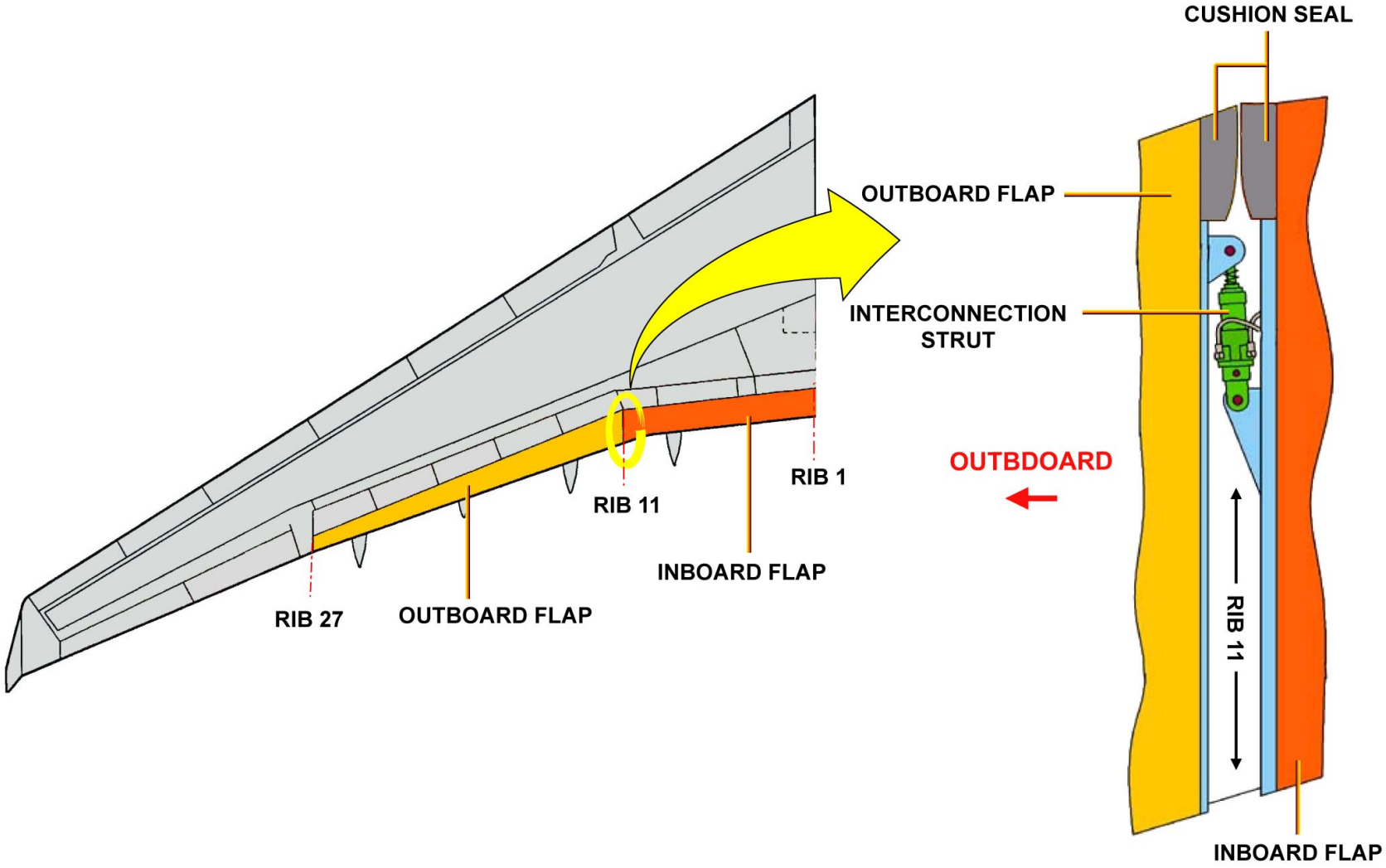

TRAILING EDGE DEVICES - FLAPS - GENERAL ARRANGEMENT

G7508471 - G3NT1T0 - FM51DK000000001

WINGS D/O (3)

TRAILING EDGE DEVICES (continued)

INBOARD FLAP STRUCTURE (METALLIC DESIGN)

The inboard flap is supported by a fuselage track and carriage (track 1) and one wing tack and carriage (track 2). Both are driven.
It is of classical aluminum alloy construction, with an aluminum sandwich trailing edge. A rubbing strip made of stainless steel is bonded to the outer surface of the top skin. A steel trunnion titanium casting is attached to the inboard end of the flap.
The outboard flap is supported by three wing tracks and carriages (tracks 3, 4, 5). All tracks are driven. The outer flap has a main box structure, a carbon fiber leading edge and a segmented aluminum sandwich trailing edge.
The main box structure includes:
- a top and a bottom skin panels stiffened by integrated stringers, both made of solid laminate carbon fiber,
- ribs, made of solid laminate carbon fiber, except in load introduction areas, were machined aluminum ribs are used (end ribs and track ribs),
- solid laminate carbon fiber spars.

A rubbing strip made of stainless steel is bonded onto the outer surface of the top skin.

G7508471 - G3NT1T0 - FM51DK000000001

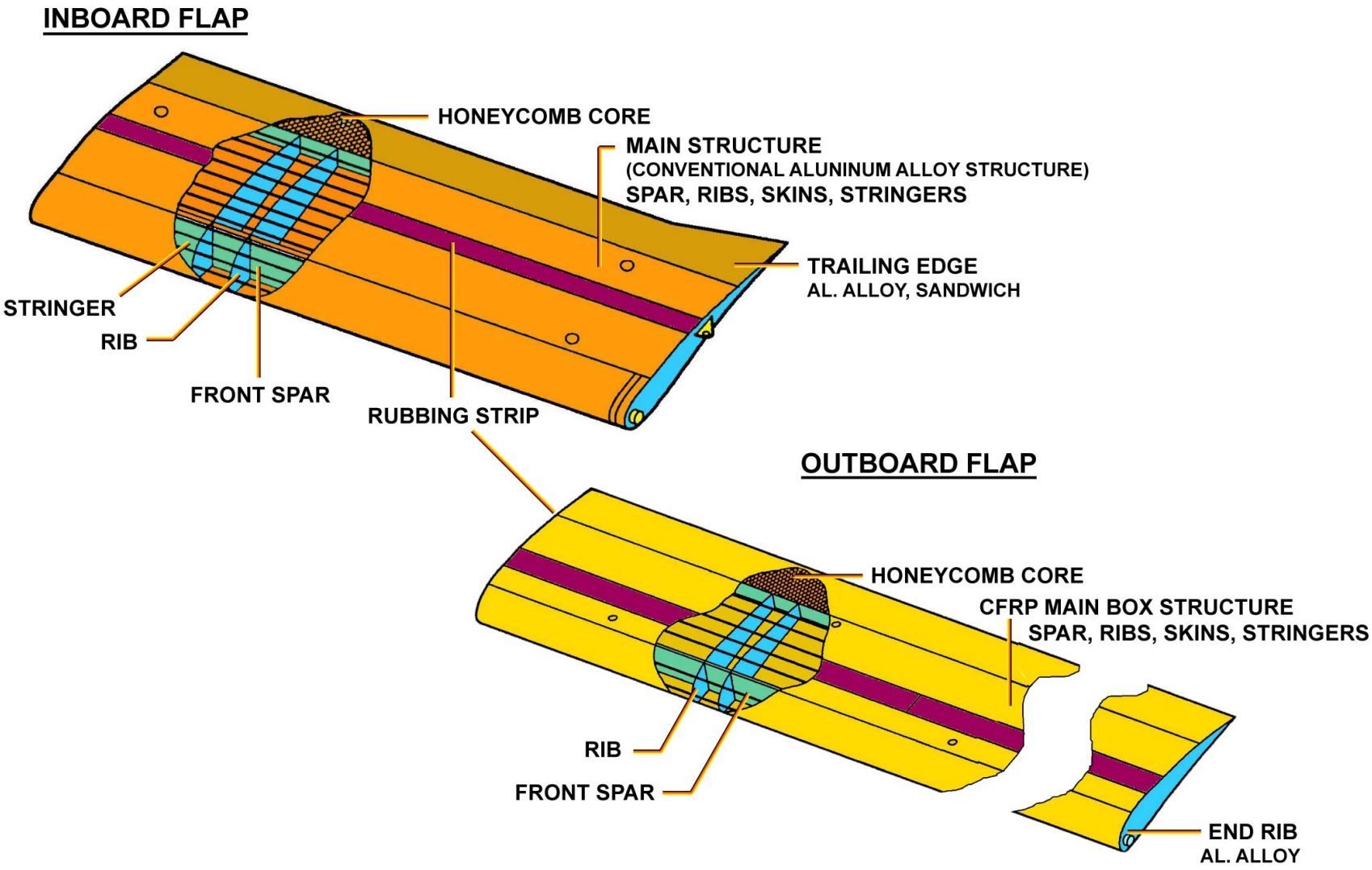

TRAILING EDGE DEVICES - INBOARD FLAP STRUCTURE (METALLIC DESIGN)

G7508471 - G3NT1T0 - FM51DK000000001

WINGS D/O (3)

TRAILING EDGE DEVICES (continued)

SPOILERS - GENERAL ARRANGEMENT

There are six spoilers installed in the upper surface of the trailing edge of each wing. Hinges attach each spoiler to the rear spar or the false rear spar. The spoiler actuators are installed between the actuator attachment fittings and the rear spar, or the false rear spar of the wing box.

SPOILERS - STRUCTURE LAYOUT

The spoilers have a wedge-shaped structure. Top and bottom skins are made of carbon fiber. They are bonded to a honeycomb core. The spoiler hinges and the spoiler actuator attachment-fittings are made of aluminum alloy.

G7508471 - G3NT1T0 - FM51DK000000001

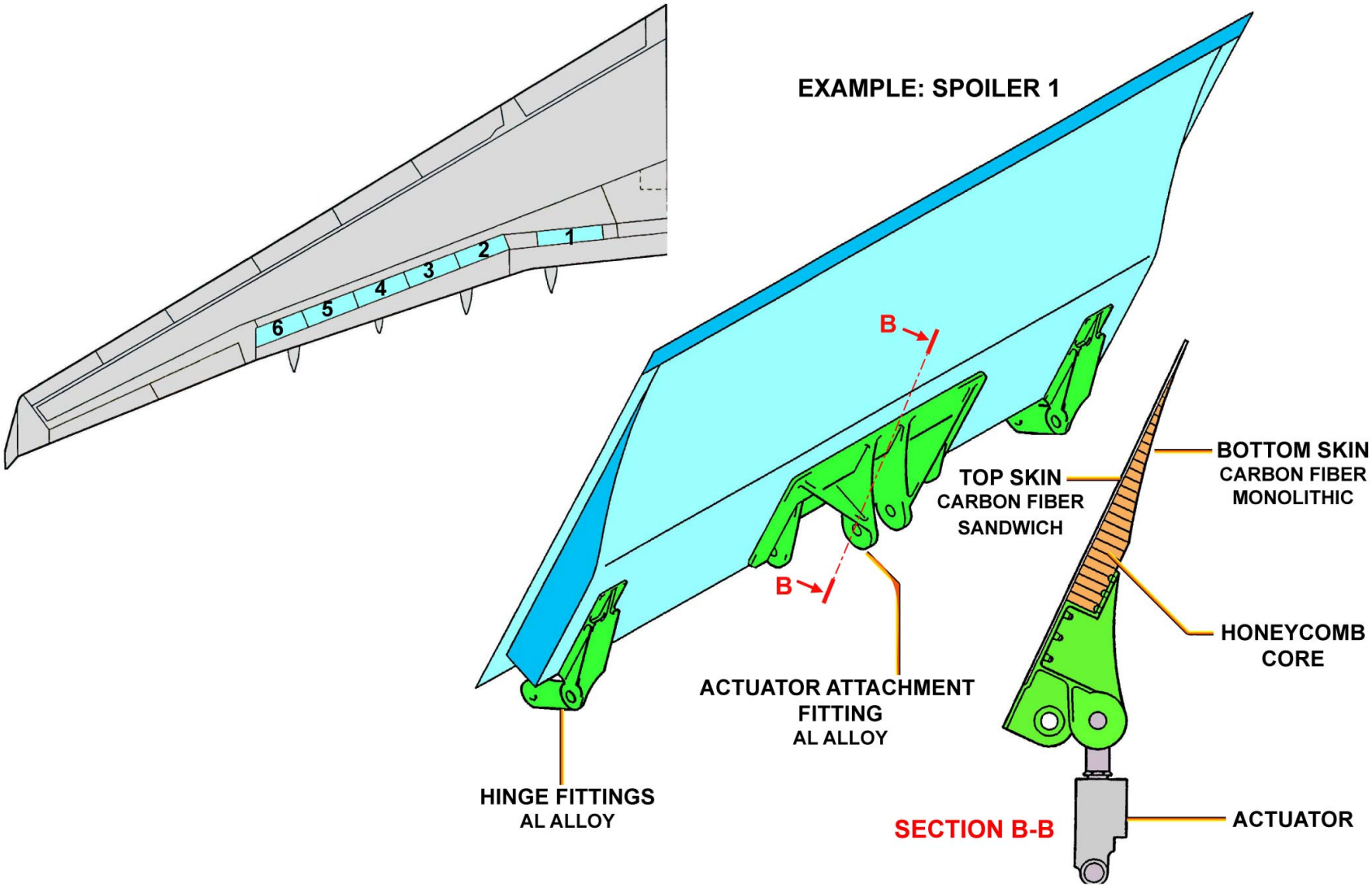

TRAILING EDGE DEVICES - SPOILERS - GENERAL ARRANGEMENT & SPOILERS - STRUCTURE LAYOUT

WINGS D/O (3)

TRAILING EDGE DEVICES (continued)

AILERONS - STRUCTURE LAYOUT

The ailerons are located at the end of the wings between Rib 39 and Rib 33 for the outboard aileron, and between Rib 33 and Rib 27 for the inboard aileron. The box structure has the following parts:
- a lower and an upper Carbon Fiber Reinforced Plastic (CFRP) sandwich panel, with monolithic areas at the rib and spar attachments,
- a spar assembly made in two parts (a mechanically-machined titanium part and a CFRP part),
- and ribs assemblies (made of CFRP).

There are five hinge fittings and two actuator attachment fittings. They are attached to the spar web and to the spar booms and skins. The leading edge panels are attached to the skin panel rebates.

G7508471 - G3NT1T0 - FM51DK000000001

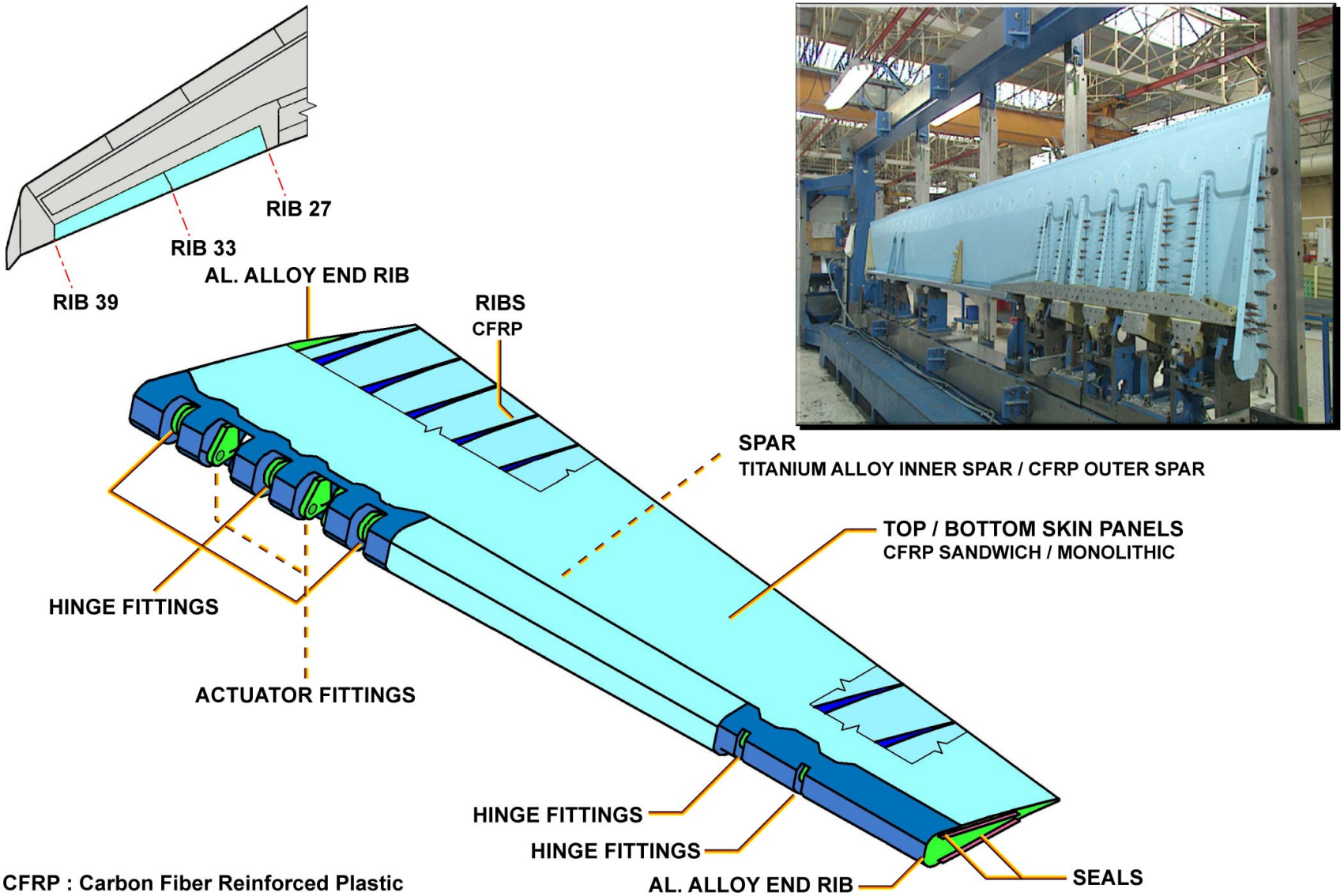

TRAILING EDGE DEVICES - AILERONS - STRUCTURE LAYOUT

G7508471 - G3NT1T0 - FM51DK000000001

STRUCTURE REPAIR MANUAL (SRM) D/O (3)

GENERAL

The structure repair manual is a non-customized document.
It has been prepared in accordance with Air Transport Association of America (ATA) specification 100.
The SRM includes descriptive information as well as specific instructions and data to perform the assessment of structural damage and to perform repairs. The manual content is approved by the European Airworthiness Authority EASA ("European Aviation Safety Agency").
For most of the damage/defect discovered on the aircraft structure, the SRM is the first document to be used to assess the damage, to identify the affected structure and to determine the subsequent action or repair to be performed.

G7508471 - G3NT1T0 - FM51DZ000000001

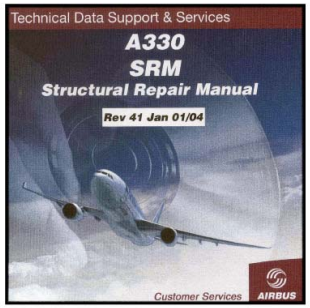

NON CUSTOMIZED DOCUMENT

PREPARED IN ACCORDANCE WITH THE AIR TRANSPORT ASSOCIATION (ATA), SPECIFICATION 100

EASA (European Aviation Safety Agency) APPROVED DOCUMENT

MAIN CONTENTS:
- **STRUCTURE PART IDENTIFICATION,**
- **ALLOWABLE DAMAGE,**
- **STRUCTURAL REPAIRS,**
- **MATERIAL AND FASTENER INFORMATION.**

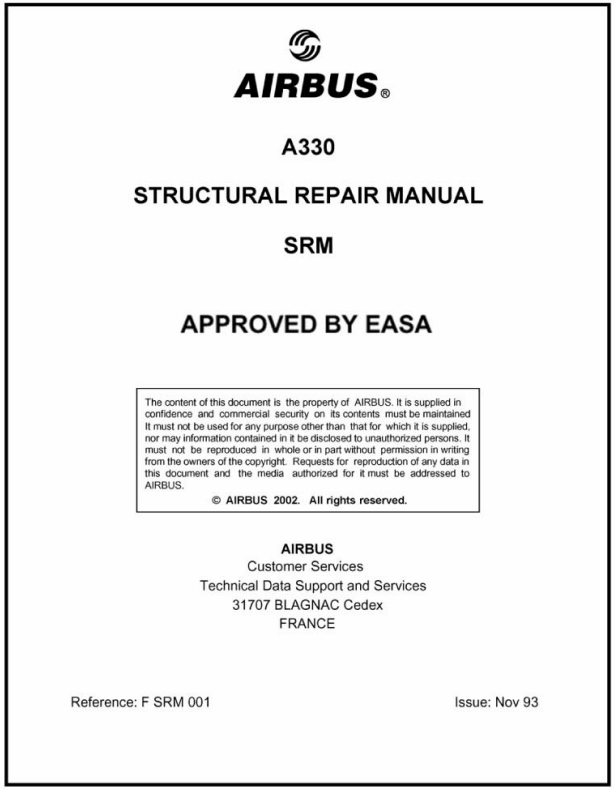

AIRBUS

A330

STRUCTURAL REPAIR MANUAL

SRM

APPROVED BY EASA

The content of this document is the property of AIRBUS. It is supplied in confidence and commercial security on its contents must be maintained It must not be used for any purpose other than that for which it is supplied, nor may information contained in it be disclosed to unauthorized persons. It must not be reproduced in whole or in part without permission in writing from the owners of the copyright. Requests for reproduction of any data in this document and the media authorized for it must be addressed to AIRBUS.

© AIRBUS 2002. All rights reserved.

AIRBUS
Customer Services
Technical Data Support and Services
31707 BLAGNAC Cedex
FRANCE

Reference: F SRM 001 Issue: Nov 93

GENERAL

G7508471 - G3NT1T0 - FM51DZ000000001

STRUCTURE REPAIR MANUAL (SRM) D/O (3)

MANUAL BREAKDOWN

The SRM is divided in several chapters. The manual begins with some front pages providing some general information (HIGHLIGHTS, RECORD OF REVISIONS...). The Introduction chapter (CHAPTER 00) contains all the necessary information for manual usage.
The alphanumerical Index provides a quick access to the part identification using the partnumber as the entry point.
The SRI (Structure Repair Inspections) chapter has to be used only when a post-repair inspection program is required in the repair instructions.
The chapter 51 contains all the repair standards practices, materials, fasteners information.
The chapters 52 to 57 are the specific chapters containing the identification of the individual parts, the related allowable damage information and the available repair instructions.

G7508471 - G3NT1T0 - FM51DZ000000001

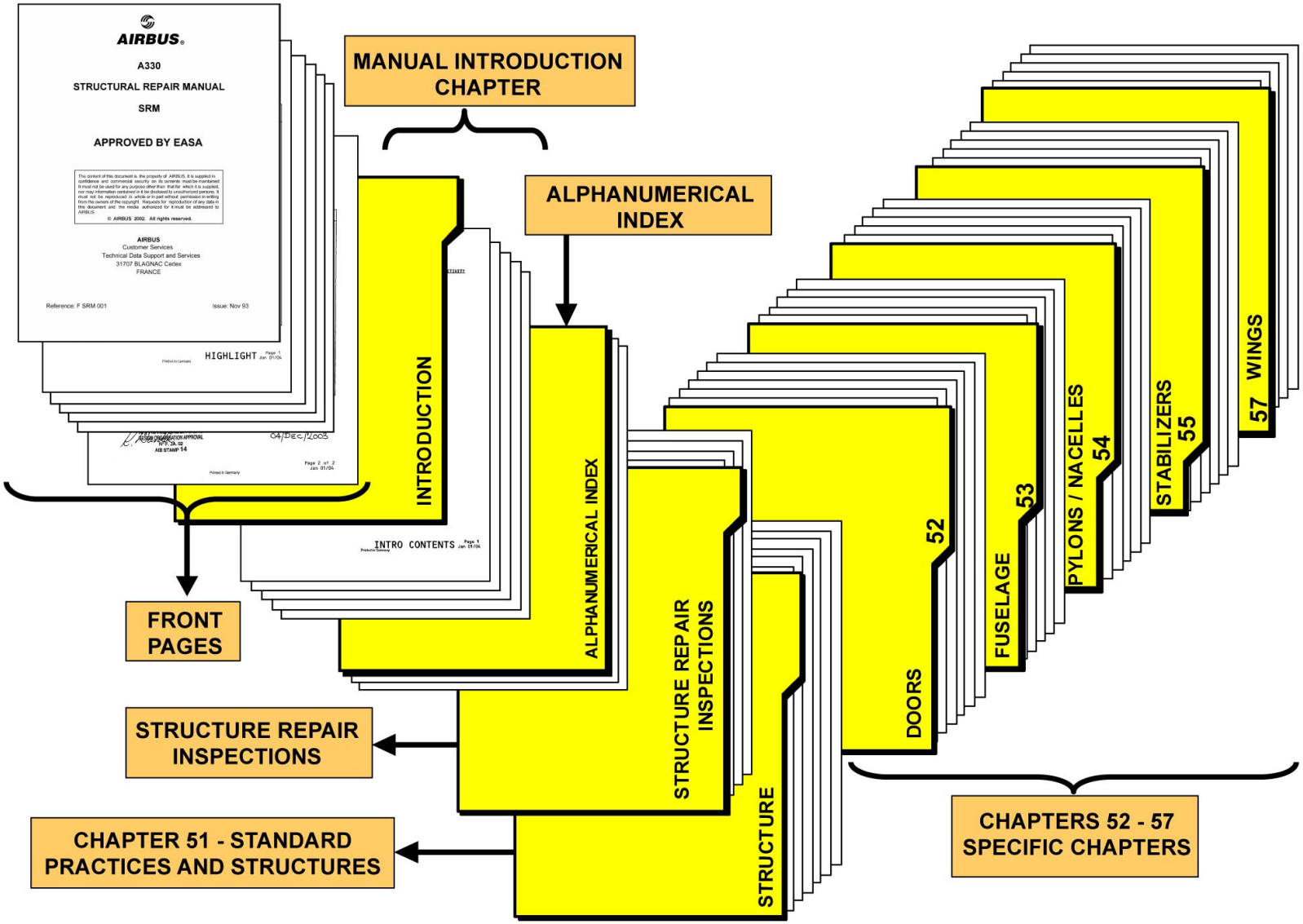

MANUAL BREAKDOWN

G7508471 - G3NT1T0 - FM51DZ000000001

STRUCTURE REPAIR MANUAL (SRM) D/O (3)

FRONT PAGES

The front pages of the manual provides general information related to the manual itself:
- the revision transmittal sheet,
- "highlights" pages which identify the modifications from the previous manual revision.
- the record of revisions approved,
and the record of temporary revisions,

G7508471 - G3NT1T0 - FM51DZ000000001

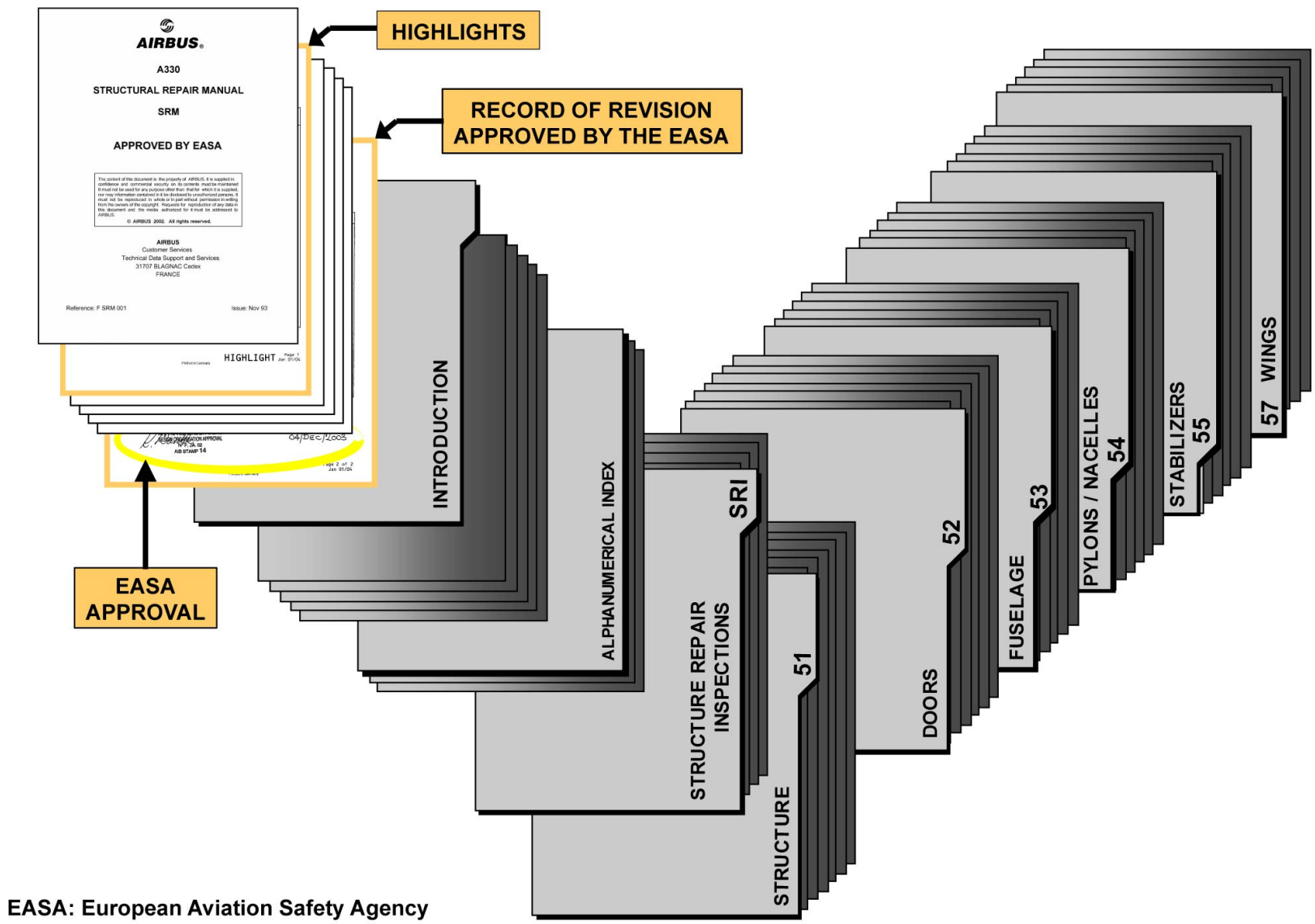

EASA: European Aviation Safety Agency

FRONT PAGES

G7508471 - G3NT1T0 - FM51DZ000000001

STRUCTURE REPAIR MANUAL (SRM) D/O (3)

INTRODUCTION CHAPTER

The introduction chapter contains all necessary information and explanations to enable a correct use of the manual. It also include the aircraft allocation list and the aircraft weight variant identification.

G7508471 - G3NT1T0 - FM51DZ000000001

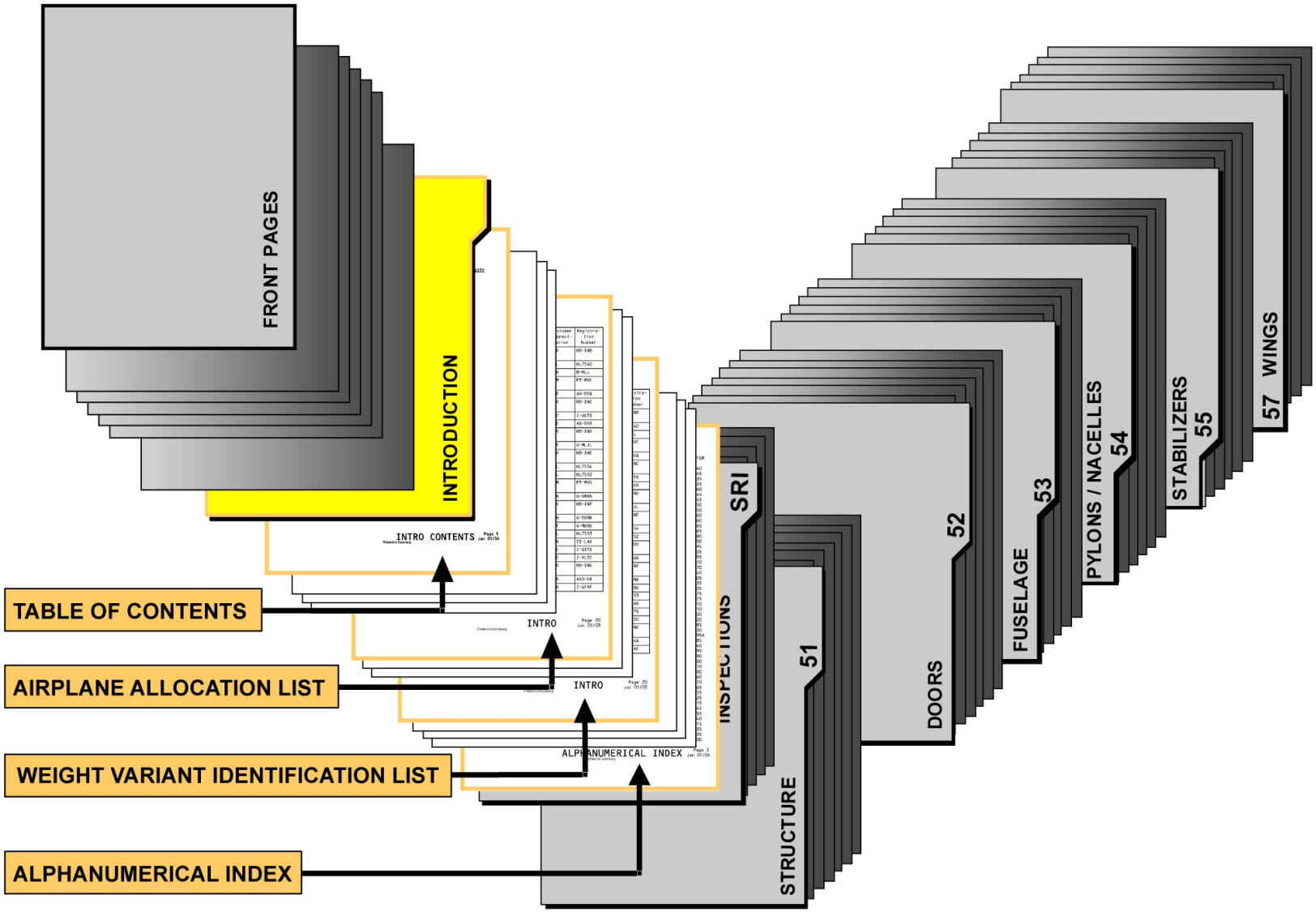

INTRODUCTION CHAPTER

G7508471 - G3NT1T0 - FM51DZ000000001

STRUCTURE REPAIR MANUAL (SRM) D/O (3)

STRUCTURAL REPAIR INSPECTIONS (SRI) CHAPTER

For permanent repairs with inspection program, inspections are quoted along with the repair.
Due to the amount of common inspection methods, these requirements have been transferred in a separate appendix to the SRM:
- for more clarity of the SRM,
- for better handling of the inspection requirements.
The chapter Structural Repair Inspections (SRI) gives all necessary inspection instructions on structural damage, threshold and intervals.

G7508471 - G3NT1T0 - FM51DZ000000001

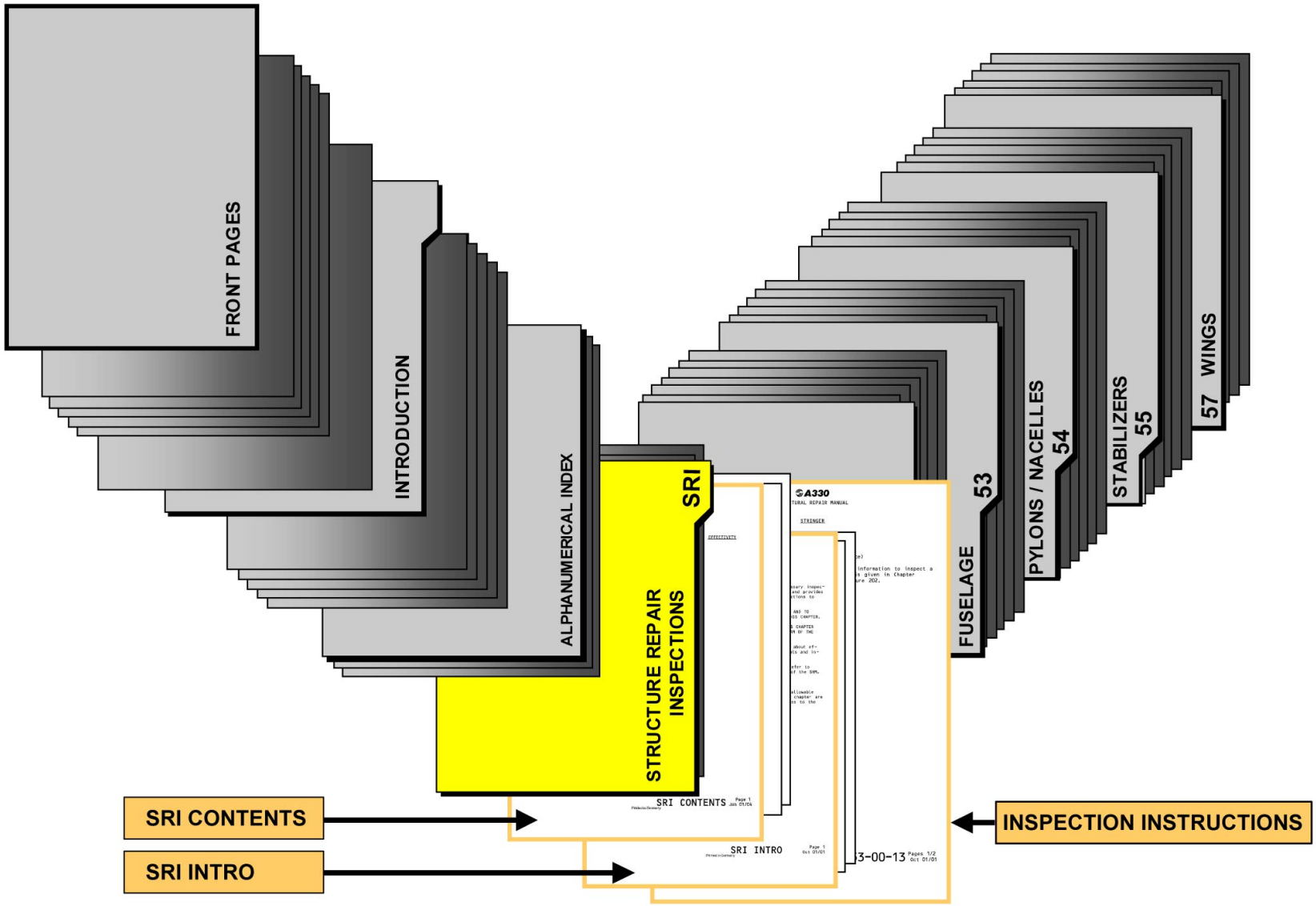

STRUCTURAL REPAIR INSPECTIONS (SRI) CHAPTER

G7508471 - G3NT1T0 - FM51DZ000000001

STRUCTURE REPAIR MANUAL (SRM) D/O (3)

NUMBERING SYSTEM AND PAGE BLOCK ALLOCATION

Numbering system:
Each subject, within the SRM, is identified using a three-element numbering system chapter/section and sub-section.
- the first element designates the chapter which is assigned by the ATA spec. 100,
- the second element designates the section within the chapter. The first digit is assigned by the ATA spec. 100. The second digit is assigned by Airbus S.A.S,
- the third element identifies the sub-section (subject) within the section and is assigned by Airbus S.A.S.

A standard page block allocation is used for all SRM chapters.
- pages 1 to 99 for structure identification,
- pages 101 to 199 for allowable damage,
- pages 201 to 999 for repairs.

G7508471 - G3NT1T0 - FM51DZ000000001

NUMBERING

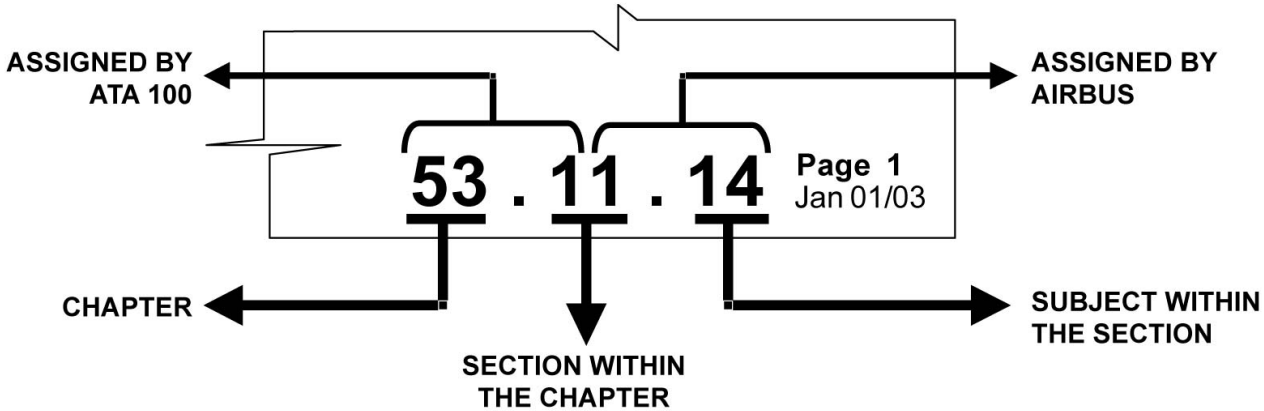

PAGE BLOCK ALLOCATION

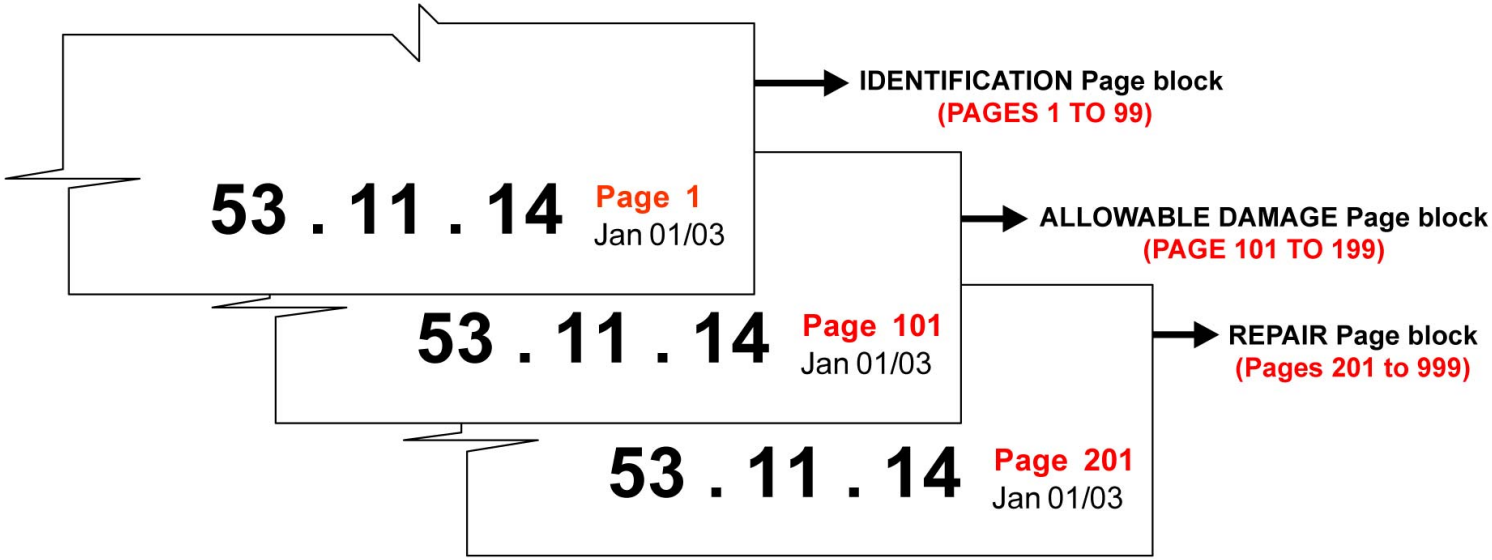

NUMBERING SYSTEM AND PAGE BLOCK ALLOCATION

G7508471 - G3NT1T0 - FM51DZ000000001

STRUCTURE REPAIR MANUAL (SRM) D/O (3)

CHAPTER 51 (STANDARD PRACTICES AND STRUCTURES)

Information of a general nature or information applicable to more than one chapter, is included in chapter 51.

NOTE: REMINDER: the entry point within the SRM is always the specific chapter 52 to 57, depending on the affected part.

G7508471 - G3NT1T0 - FM51DZ000000001

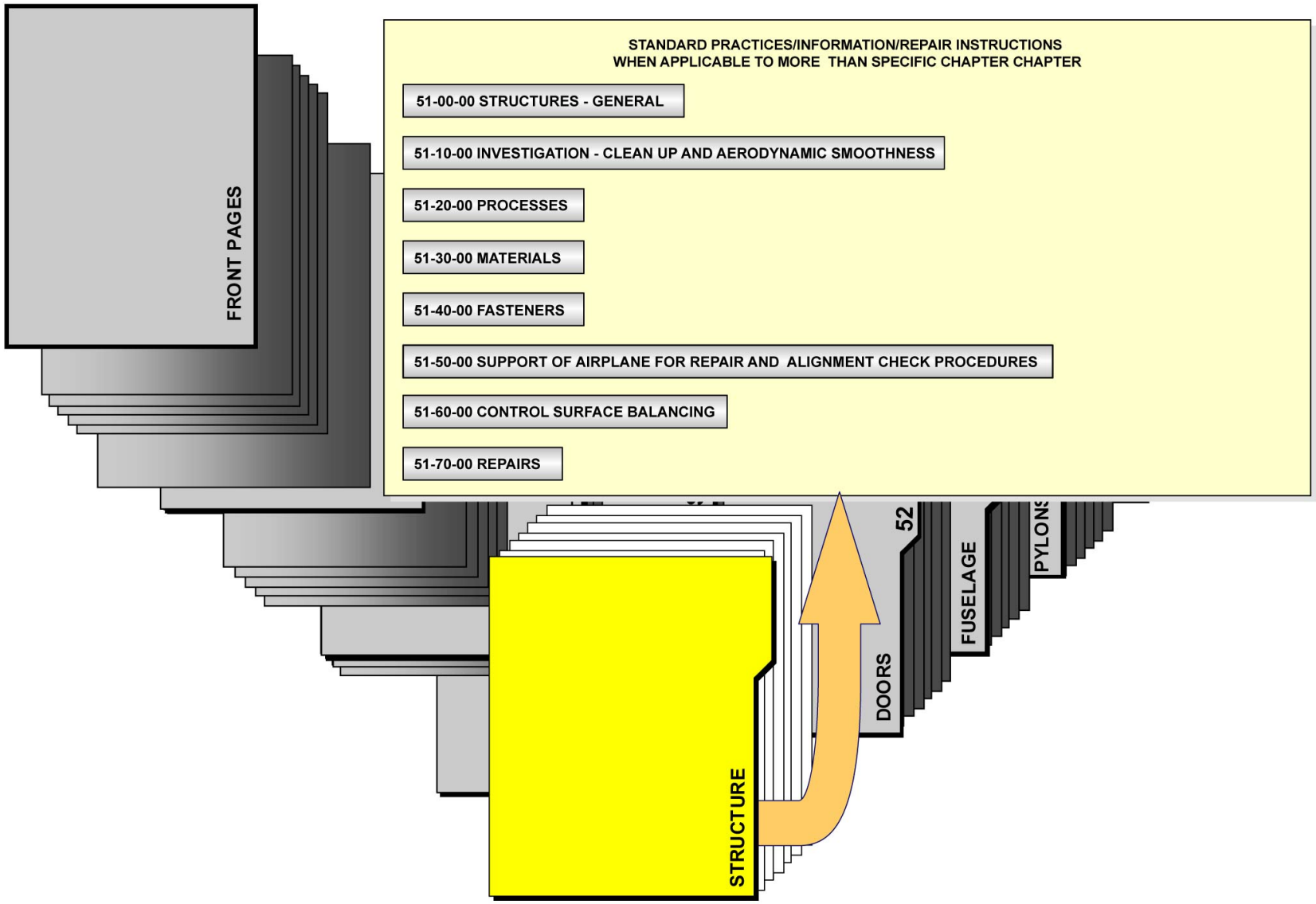

CHAPTER 51 (STANDARD PRACTICES AND STRUCTURES)

G7508471 - G3NT1T0 - FM51DZ000000001

STRUCTURE REPAIR MANUAL (SRM) D/O (3)

CHAPTER 52 TO 57 CONTENTS

LAYOUT

Chapters 52 to 57 all have the same layout, which conforms to the defined page block allocation system (PB 01 to 99 - identification, PB 101 to 199 - allowable damage, PB 201 to 999 - repairs). In addition, a table of contents and a Service Bulletin (SB) list are provided at the beginning of each chapter. Depending on the chapters, the Modification/Service Bulletin list is to be found either at the chapter level, or main section level.
For a correct identification of the individual parts the Identification page block and the Modification/Service Bulletin list have to be used together.
Once identified the applicable allowable damage information will be used to define whether a repair or a corrective action is required or not before releasing the aircraft.

G7508471 - G3NT1T0 - FM51DZ000000001

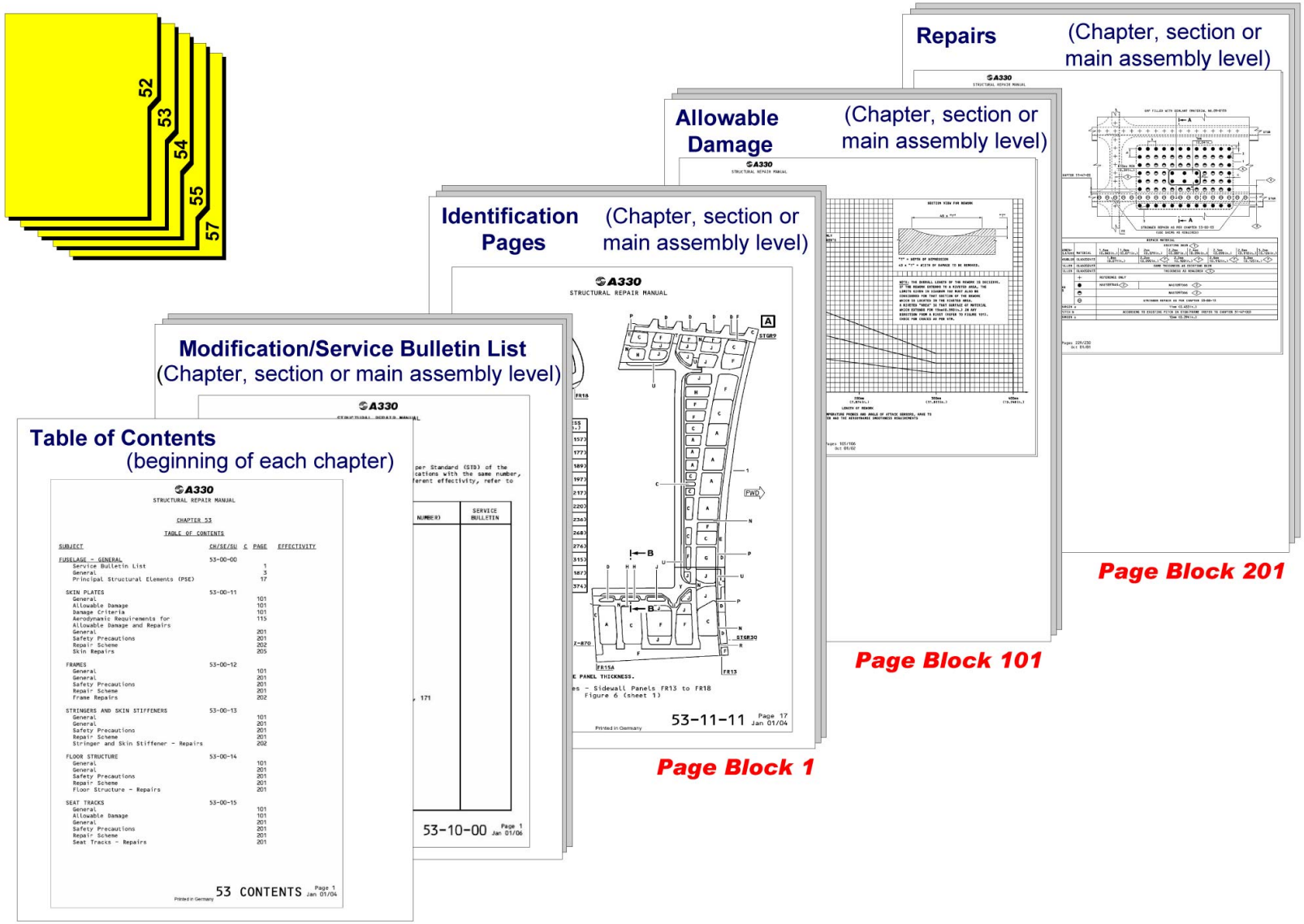

CHAPTER 52 TO 57 CONTENTS - LAYOUT

G7508471 - G3NT1T0 - FM51DZ000000001

STRUCTURE REPAIR MANUAL (SRM) D/O (3)

CHAPTER 52 TO 57 CONTENTS (continued)

MODIFICATION/SERVICE BULLETIN LIST

Located at:
The Modification / Service Bulletin list have to be used in close relation with the identification page block. It is used to define the effectivity in terms of MSN (Manufacturer Serial Number) of the structure parts. Since several versions of a same part can be available within the identification pages according a modification status.

G7508471 - G3NT1T0 - FM51DZ000000001

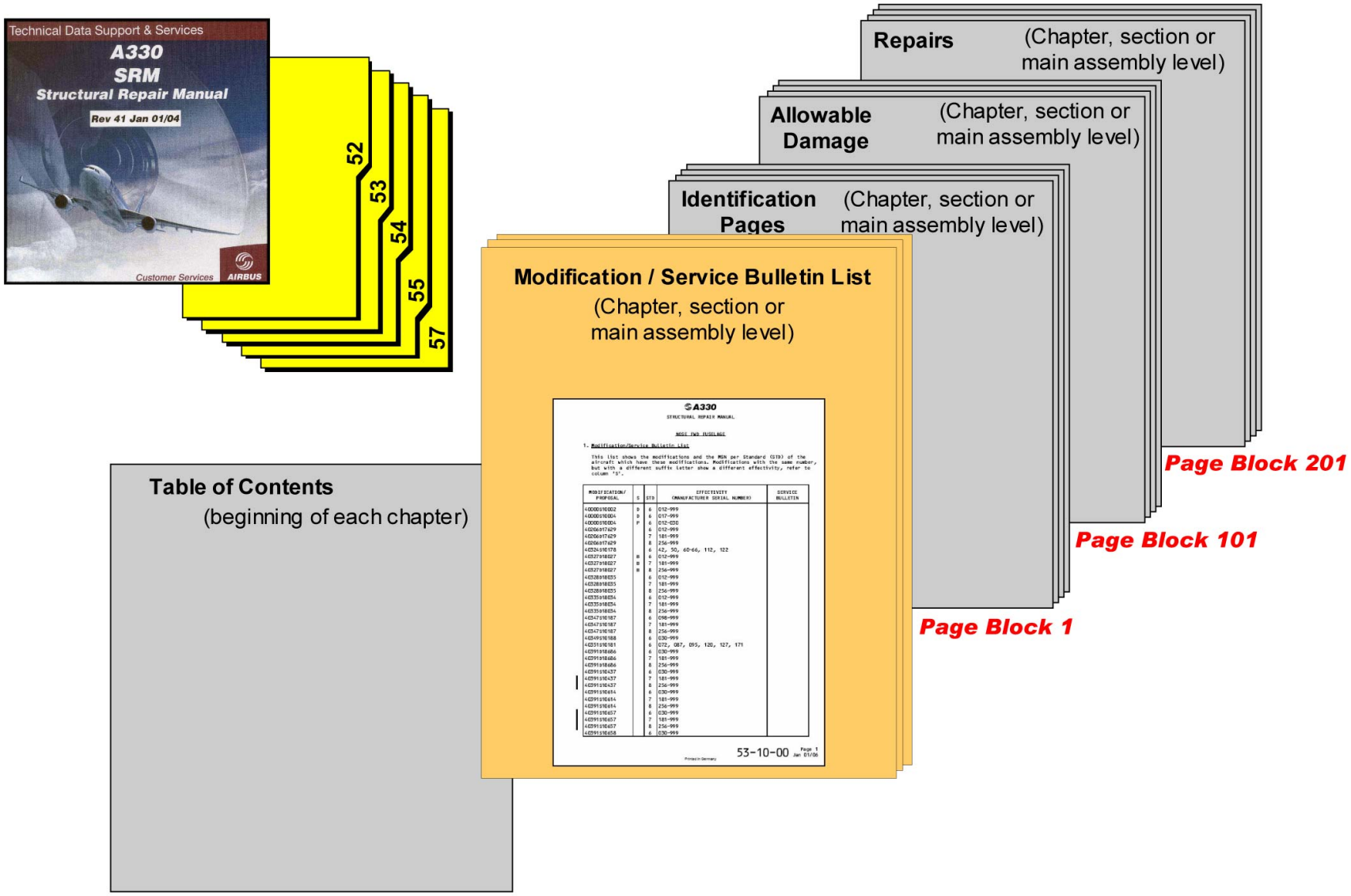

CHAPTER 52 TO 57 CONTENTS - MODIFICATION/SERVICE BULLETIN LIST

G7508471 - G3NT1T0 - FM51DZ000000001

STRUCTURE REPAIR MANUAL (SRM) D/O (3)

CHAPTER 52 TO 57 CONTENTS (continued)

MODIFICATION/SERVICE BULLETIN LIST (CONT'D)

This list provides, for a given modification number, its associated suffix and the aircraft standard, and the effectivity expressed in MSN (Manufacturer Serial Number).

G7508471 - G3NT1T0 - FM51DZ000000001

A330

STRUCTURAL REPAIR MANUAL

LOCATION WITHIN THE CHAPTER:

52: DOOR LEVEL
53: FUSELAGE SECTION LEVEL
54: CHAPTER LEVEL
55: MAIN ASSEMBLY LEVEL
57: WING SECTION LEVEL

EFFECTIVITY OF THE MODIFICATION IN MSN NUMBERS
(REF. : AIRCRAFT ALLOCATION TABLES IN SRM INTRODUCTION PART)

1. Modification/Service Bulletin List

This list shows the modifications and the MSN per Standard (STD) of the aircraft which have these modifications. Modifications with the same number, but with different effectivity, refer to

SUFFIX COLUMN:
IDENTIFIES THE DIFFERENT EFFECTIVITY OF A SAME MODIFICATION

MODIFICATION/ PROPOSAL	S	STD	EFFECTIVITY (MANUFACTURER SERIAL NUMBER)	SERVICE BULLETIN
40000S10004	D	6	017-999	
40000S10004	P	6	012-030	
40327D18027	B	6	012-999	
40327D18027	B	7	181-999	
40327D18027	B	8	256-999	
40328D18035		6	012-999	
40328D18035		7	181-999	
40328D18035		8	256-999	

CORRESPONDING SB IF ANY

MODIFICATION NUMBER

CONCERNED A/C STANDARD

CHAPTER 52 TO 57 CONTENTS - MODIFICATION/SERVICE BULLETIN LIST (CONT'D)

G7508471 - G3NT1T0 - FM51DZ000000001

STRUCTURE REPAIR MANUAL (SRM) D/O (3)

CHAPTER 52 TO 57 CONTENTS (continued)

IDENTIFICATION PAGES

In the identification pages, the individual parts of the major components are illustrated and listed in tabular form. Each identification topic begins with an introduction page, which includes a general information paragraph.

G7508471 - G3NT1T0 - FM51DZ000000001

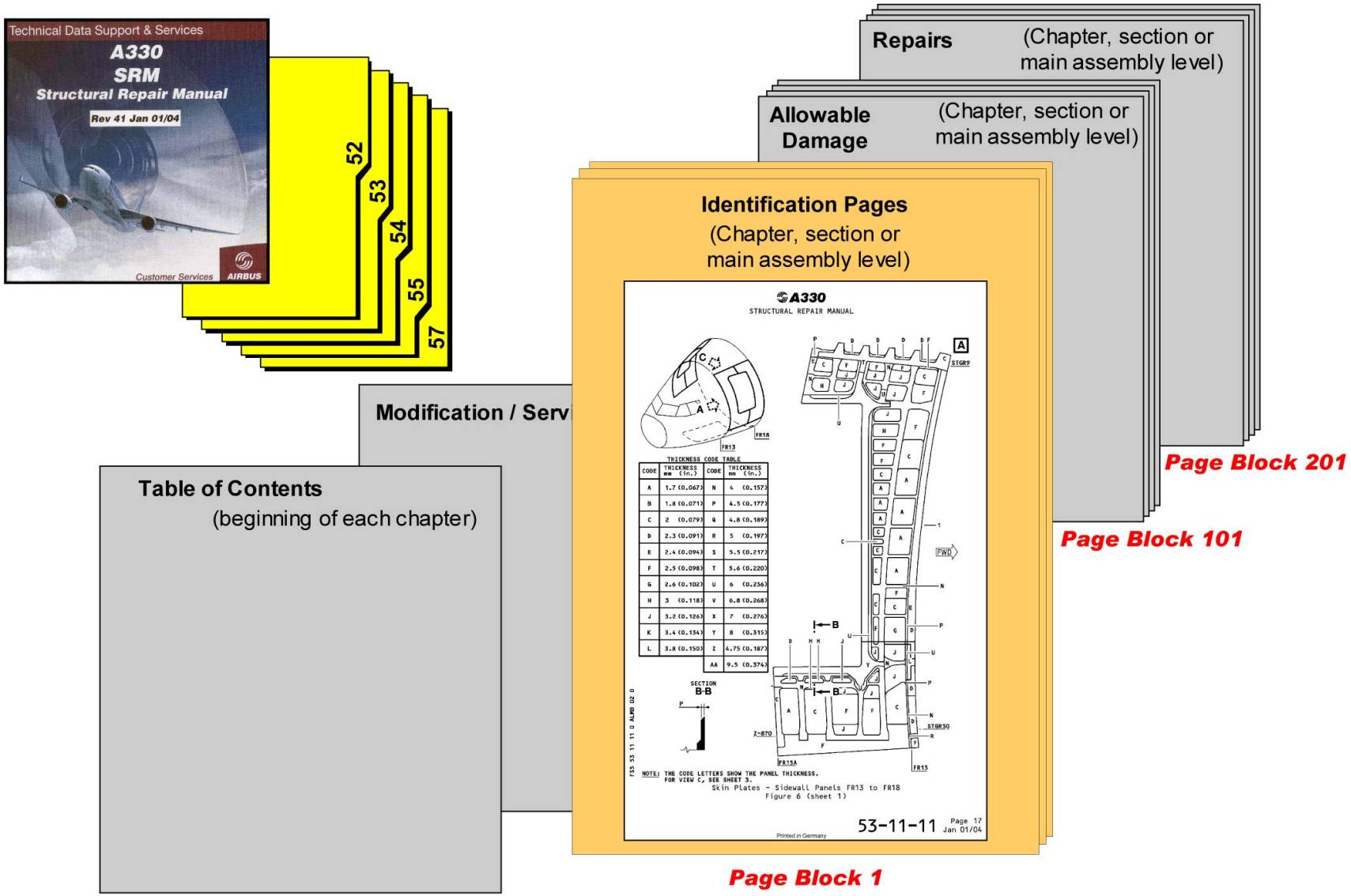

CHAPTER 52 TO 57 CONTENTS - IDENTIFICATION PAGES

G7508471 - G3NT1T0 - FM51DZ000000001

STRUCTURE REPAIR MANUAL (SRM) D/O (3)

CHAPTER 52 TO 57 CONTENTS (continued)

IDENTIFICATION PAGES - EXAMPLE: METALLIC STRUCTURES

The item number is the key in between the illustration and the identification table. For metallic structure such as fuselage skin panels, the different material thicknesses are provided, using letter codes or shaded areas as a key to the thickness tables. The associated identification table provides the additional material and the Part Number (PN) modification status information.

G7508471 - G3NT1T0 - FM51DZ000000001

A330
STRUCTURAL REPAIR MANUAL

NOMINAL THICKNESSES

THICKNESS CODE TABLE

CODE	THICKNESS mm (in.)	CODE	THICKNESS mm (in.)
A	1.7 (0.067)	N	4 (0.157)
B	1.8 (0.071)	P	4.5 (0.177)
C	2 (0.079)	Q	4.8 (0.189)
D	2.3 (0.091)	R	5 (0.197)
E	2.4 (0.094)	S	5.5 (0.217)
F	2.5 (0.098)	T	5.6 (0.220)
G	2.6 (0.102)	U	6 (0.236)
H	3 (0.118)	V	6.8 (0.268)
J	3.2 (0.126)	X	7 (0.276)
K	3.4 (0.134)	Y	8 (0.315)
L	3.8 (0.150)	Z	4.75 (0.187)
		AA	9.5 (0.374)

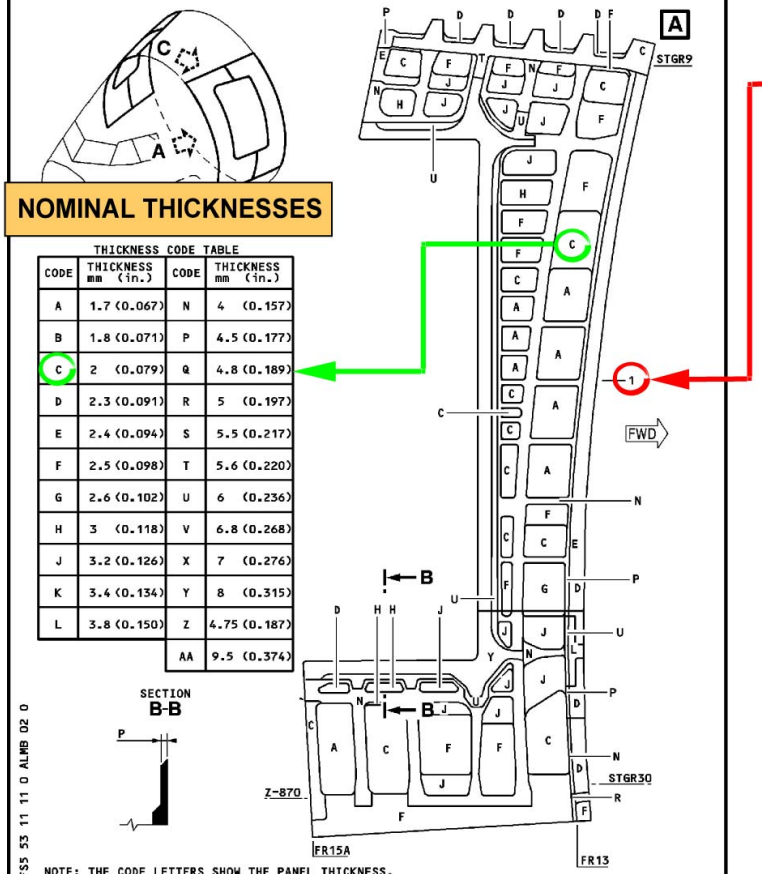

NOTE: THE CODE LETTERS SHOW THE PANEL THICKNESS.
FOR VIEW C, SEE SHEET 3.

Skin Plates - Sidewall Panels FR13 to FR18
Figure 6 (sheet 1)

53-11-11 Page 17 Jan 01/04
Printed in Germany

ITEM NUMBER

A330
STRUCTURAL REPAIR MANUAL

ITEM	NOMENCLATURE	SPECIFICATION AND/OR SECTION CODE	THICKNESS IN MM(IN.) AND/OR PARTNUMBER	I C	ACTION OR REPAIR	STATUS (MOD/PROP) SB/RC
1	Panel	2024T351	F53111121202 203 made from ABS5032A010MYPH	03		
1A	Panel	clad2024T42 ASN-A30038818	F53113159200 201	03		A40347S10187
1B	Panel	clad2024T42 ASN-A30038818	F53114289200 201	03		A42566S11752 A42470S12646
1C	Panel	clad2024T42 ASN-A30038818	F53113371200 201	03		A49194S16289
5	Panel	2024T351 ASN-A3011	F53111122202 203	03		
5A	Panel	clad2024T42 ASN-A30038818	F53113160200 201	03		A40347S10187
5B	Panel	clad2024T42 ASN-A30038818	F53114290200 201	03		A42566S11752
5C	Panel	clad2024T42 ASN-A30038818	F53114379200 201	03		A42470S12646
10	Fitting	2024T351 ASN-A3011	F53111680200 201	03		
15	Gusset	2024T351 ASN-A3011	A53611514204 205			
15A	Doubler	2024T351 ASN-A3011	F53113161200 201	03		A40347S10187
20	Shim	2024T3 ASN-A30108733	A53610314343 4.0 (0.157)			B40347S10187
25	Shim	2024T3 ASN-A30108733	A53610314621 4.0 (0.157)			B40347S10187
30	Gusset	2024T351	A53611516208 209			
30A	D		F53113163200 201	03		A40347S10187
35	Gusset	2024T351 ASN-A3011	A53611517208 209			
35A	Doubler	2024T351 ASN-A3011	F53113164200 201	03		A40347S10187
40	Shim	2024T3 ASN-A30108733	A53610314623 4.0 (0.157)			B40347S10187
45	Shim	2024T3 ASN-A30108733	A53610314334 4.0 (0.157)			B40347S10187

ASSY Dwg.: F53111025, F53113101, F53113158, F53113370, F53114291, F53114380

MAX. THICKNESS

Key to Figure 6

53-11-11 Page 24 Jan 01/04
Printed in Germany

CHAPTER 52 TO 57 CONTENTS - IDENTIFICATION PAGES - EXAMPLE: METALLIC STRUCTURES

G7508471 - G3NT1T0 - FM51DZ000000001

STRUCTURE REPAIR MANUAL (SRM) D/O (3)

CHAPTER 52 TO 57 CONTENTS (continued)

IDENTIFICATION TABLE DETAILED (STATUS MOD/PROP SB/RC COLUMN)

To find the relevant effectivity linked to a modification shown in the STATUS column, the user must refer to the modification/service bulletin list.

NOTE: Note: the status before or after modification/SB and the relevant modification solution (suffix letter) should not be forgotten. Within the modification/service bulletin list, the effectivity is given in MSN.

G7508471 - G3NT1T0 - FM51DZ000000001

A330

STRUCTURAL REPAIR MANUAL

MODIFICATION

ITEM	NOMENCLATURE	SPECIFICATION AND/OR SECTION CODE	THICKNESS IN MM(IN.) AND/OR PARTNUMBER	I C	ACTION OR REPAIR	STATUS (MOD/PROP) SB/RC
1	Panel, skin	T42 ABS5043D016	F53270951200 1.6 (0.063)		PB101 53-00-11	
1A	Panel, skin	T42 ABS5043D016	F53270951202 1.6 (0.063)		PB101 53-00-11	A41965D19203F
1B	Panel, skin	T42 ABS5043D016	F53270951222 1.6 (0.063)		PB101 53-00-11	A48954D42755B
5	Strap, assy		F53270953000		Replace	
5A	Strap	3.7164.1 LN9297H10	F53270364220 1.0 (0.039)		Replace	A48954D42755B

41965D19203	E	8	256-999
41965D19203	F	6	113-999
41965D19203	F	7	181-522
41965D19203	F	8	256-515
41965D19203	G	6	113-999
41965D19203	G	7	181-507,509-521,525-999
41965D19203	G	8	256-515,533-999

53-20-00 Page 38 Jan 01/06

REFER TO RELEVANT:
MODIFICATION/SERVICE BULLETIN LIST
TO FIND EFFECTIVITY

CHAPTER 52 TO 57 CONTENTS - IDENTIFICATION TABLE DETAILED (STATUS MOD/PROP SB/RC COLUMN)

G7508471 - G3NT1T0 - FM51DZ000000001

STRUCTURE REPAIR MANUAL (SRM) D/O (3)

CHAPTER 52 TO 57 CONTENTS (continued)

ALLOWABLE DAMAGE PAGE BLOCK

The information to be found within allowable damage page block enables the operator to define whether a damaged aircraft may be returned into service without repair. An allowable damage permitted has no significant effect on the strength or fatigue life of the structure, which must still be capable of fulfilling its function. Allowable damage may require minimal rework such as cleanup or drilling of stop holes.

G7508471 - G3NT1T0 - FM51DZ000000001

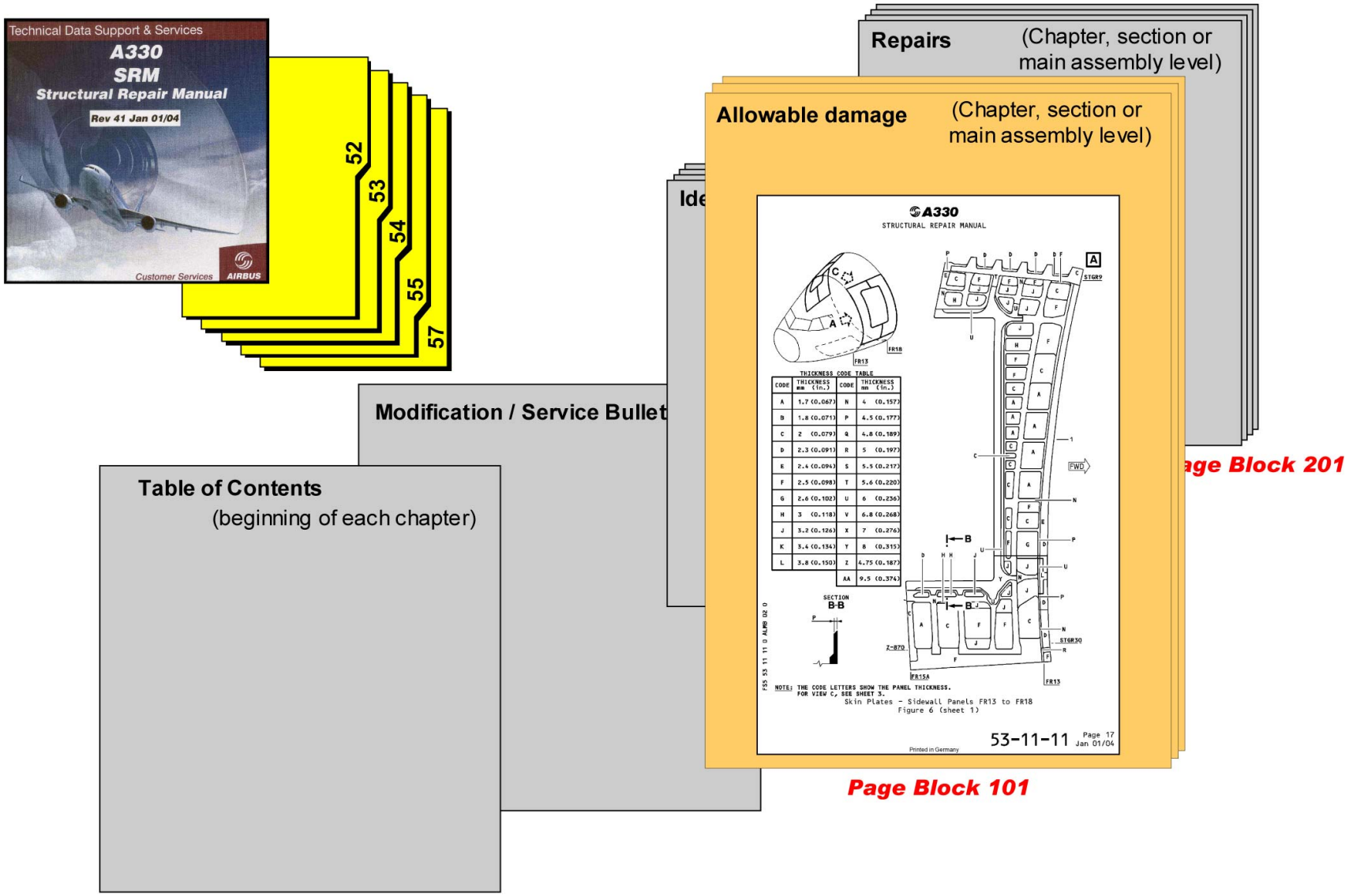

CHAPTER 52 TO 57 CONTENTS - ALLOWABLE DAMAGE PAGE BLOCK

G7508471 - G3NT1T0 - FM51DZ000000001

STRUCTURE REPAIR MANUAL (SRM) D/O (3)

CHAPTER 52 TO 57 CONTENTS (continued)

ALLOWABLE DAMAGE PAGE BLOCK - LAYOUT

Basically, the allowable page block contains different page types:
- general information pages,
- damage criteria tables,
- paragraph for each type of damage,
- damage measurement procedure,
- damage localization (zoning) figures,
- allowable damage diagram.

G7508471 - G3NT1T0 - FM51DZ000000001

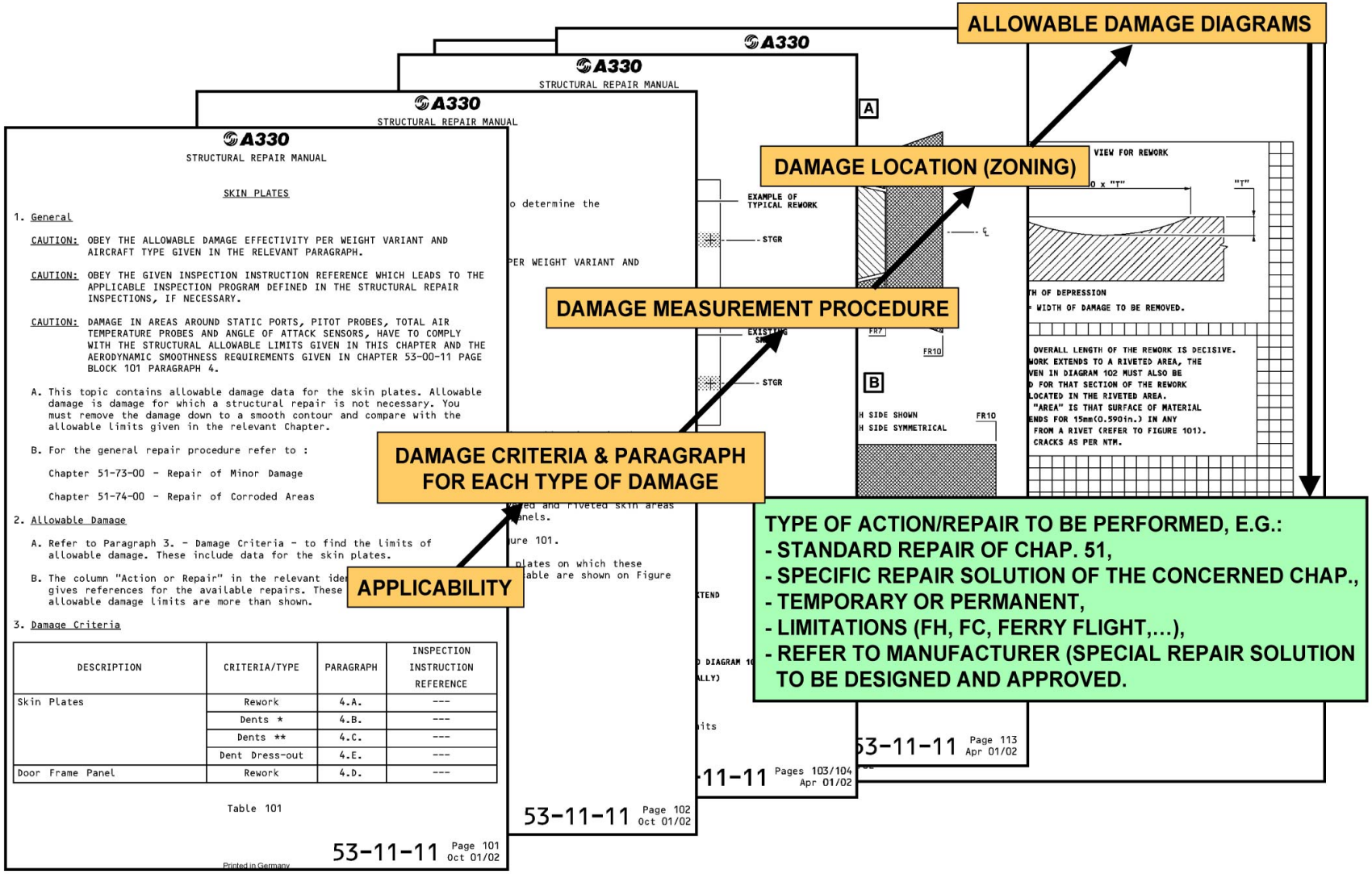

CHAPTER 52 TO 57 CONTENTS - ALLOWABLE DAMAGE PAGE BLOCK - LAYOUT

G7508471 - G3NT1T0 - FM51DZ000000001

STRUCTURE REPAIR MANUAL (SRM) D/O (3)

CHAPTER 52 TO 57 CONTENTS (continued)

REPAIRS PAGE BLOCK

The repairs page block (PB 201), contains necessary information to carry out permissible repairs.

G7508471 - G3NT1T0 - FM51DZ000000001

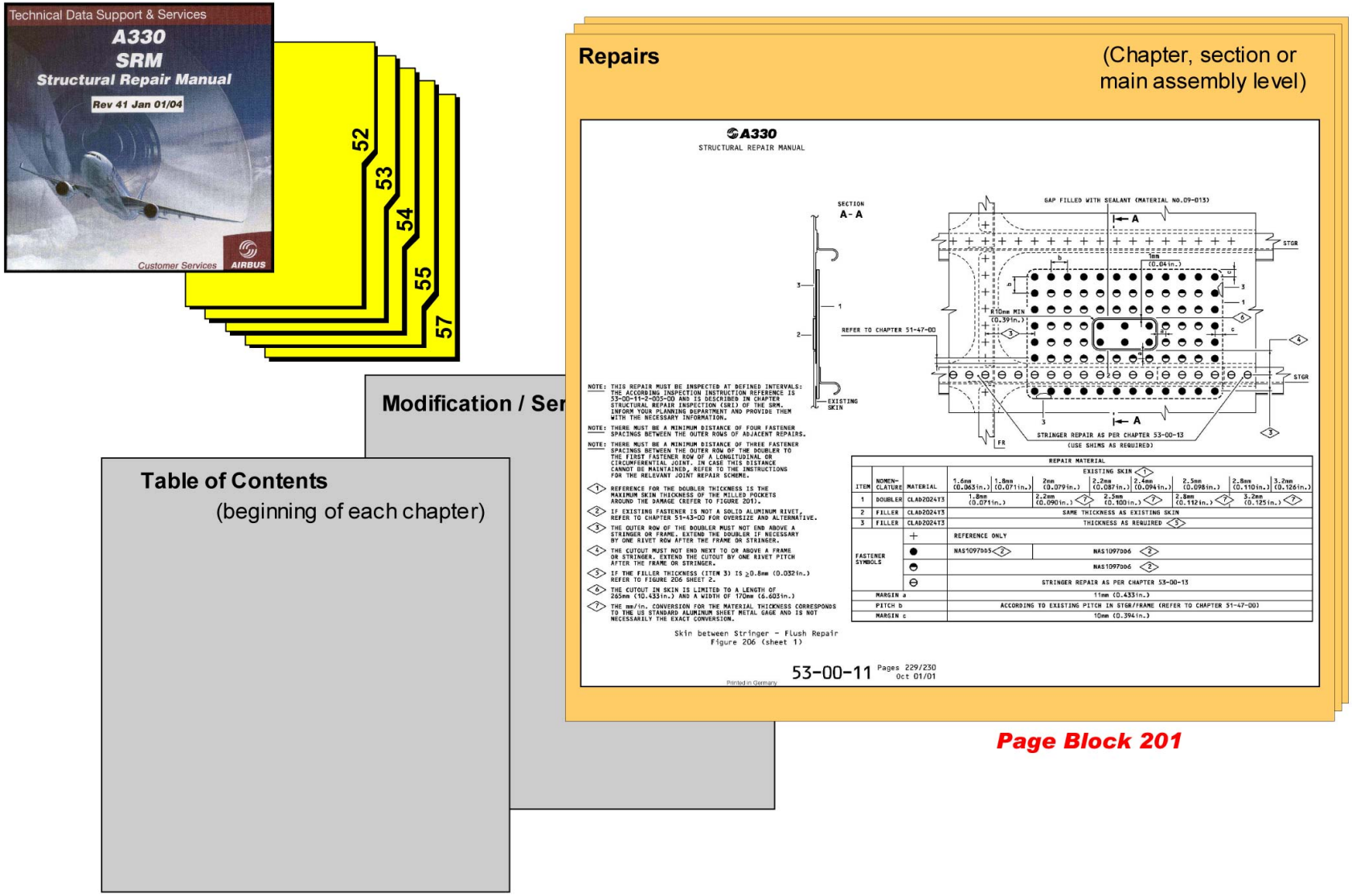

CHAPTER 52 TO 57 CONTENTS - REPAIRS PAGE BLOCK

G7508471 - G3NT1T0 - FM51DZ000000001

STRUCTURE REPAIR MANUAL (SRM) D/O (3)

CHAPTER 52 TO 57 CONTENTS (continued)

REPAIRS PAGE BLOCK - LAYOUT

Each of the repairs is described with illustrations and procedure instructions, which includes repair applicability data and repair materials lists.

G7508471 - G3NT1T0 - FM51DZ000000001

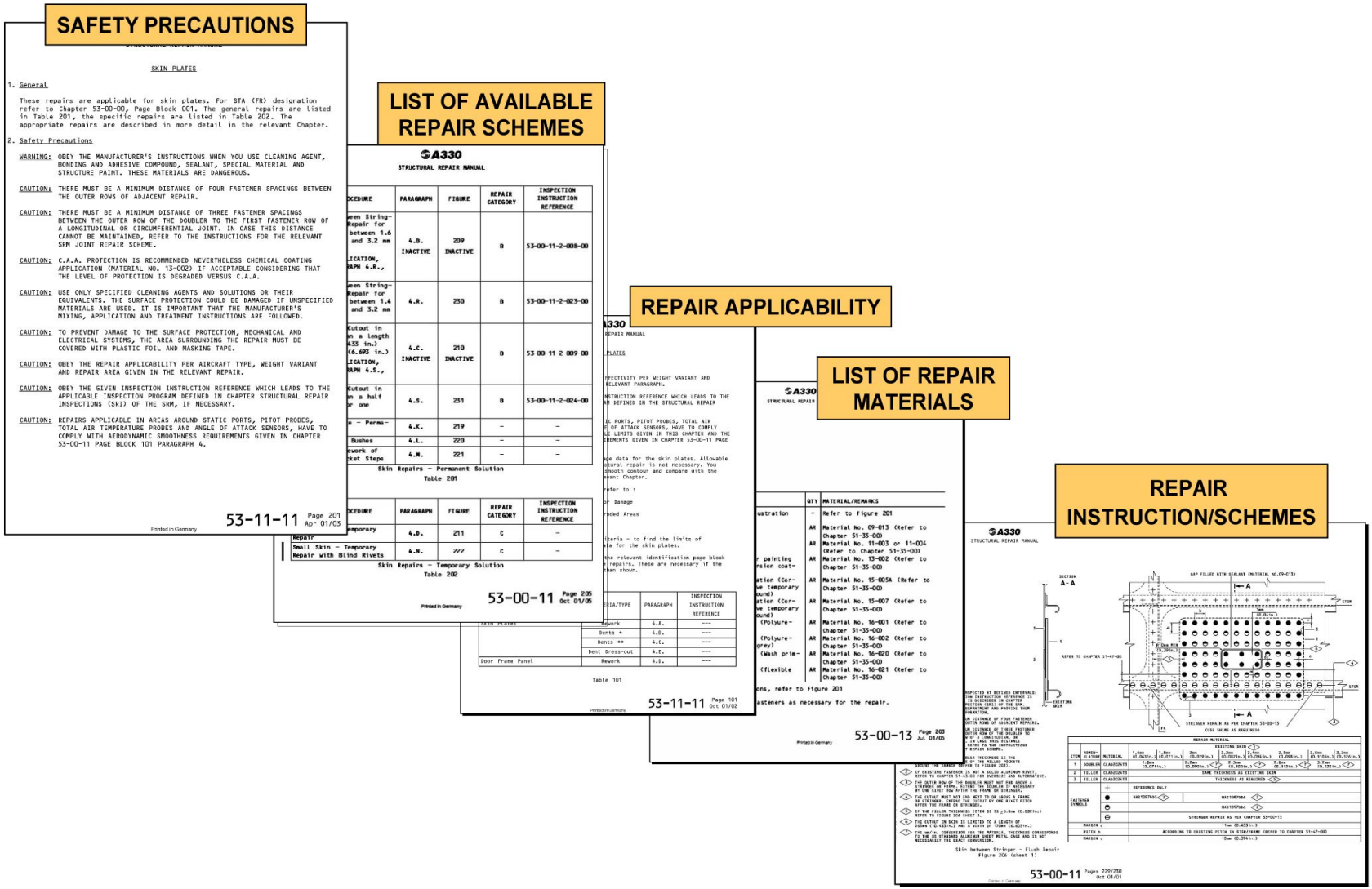

CHAPTER 52 TO 57 CONTENTS - REPAIRS PAGE BLOCK - LAYOUT

G7508471 - G3NT1T0 - FM51DZ000000001

STRUCTURE REPAIR MANUAL (SRM) D/O (3)

SRM GENERAL USAGE PROCEDURE

When a damage is discovered, the first step is to evaluate, classify and accurately measure by using SRM chapter 51-11-XX.
The next step is the full identification of the affected area/structure. This is achieved using the identification page block (pages 01-99) of the related specific chapter/section (52-57). According to the original structure data and the actual damage characteristics, it is then possible to determine whether the damage is within the defined allowable limits or not. This is done using the allowable damage page block (pages 101-199) of the related specific chapter/section. If the damage is within the allowable limits, the damage can be:
- permanent,
- permanent with operating limits,
- temporary.

If the damage is above the limits, you must check whether a repair is available and/or applicable within the repair page block (pages 201-999). If not, a specific repair design will be performed and will have to be approved by the authority. A Repair Design Approval Sheet (RAS) will be created by Airbus and sent to the operator.
The RAS:
- is the Airbus form for approval issuance,
- identifies the repaired parts,
- links all the relevant material.

G7508471 - G3NT1T0 - FM51DZ000000001

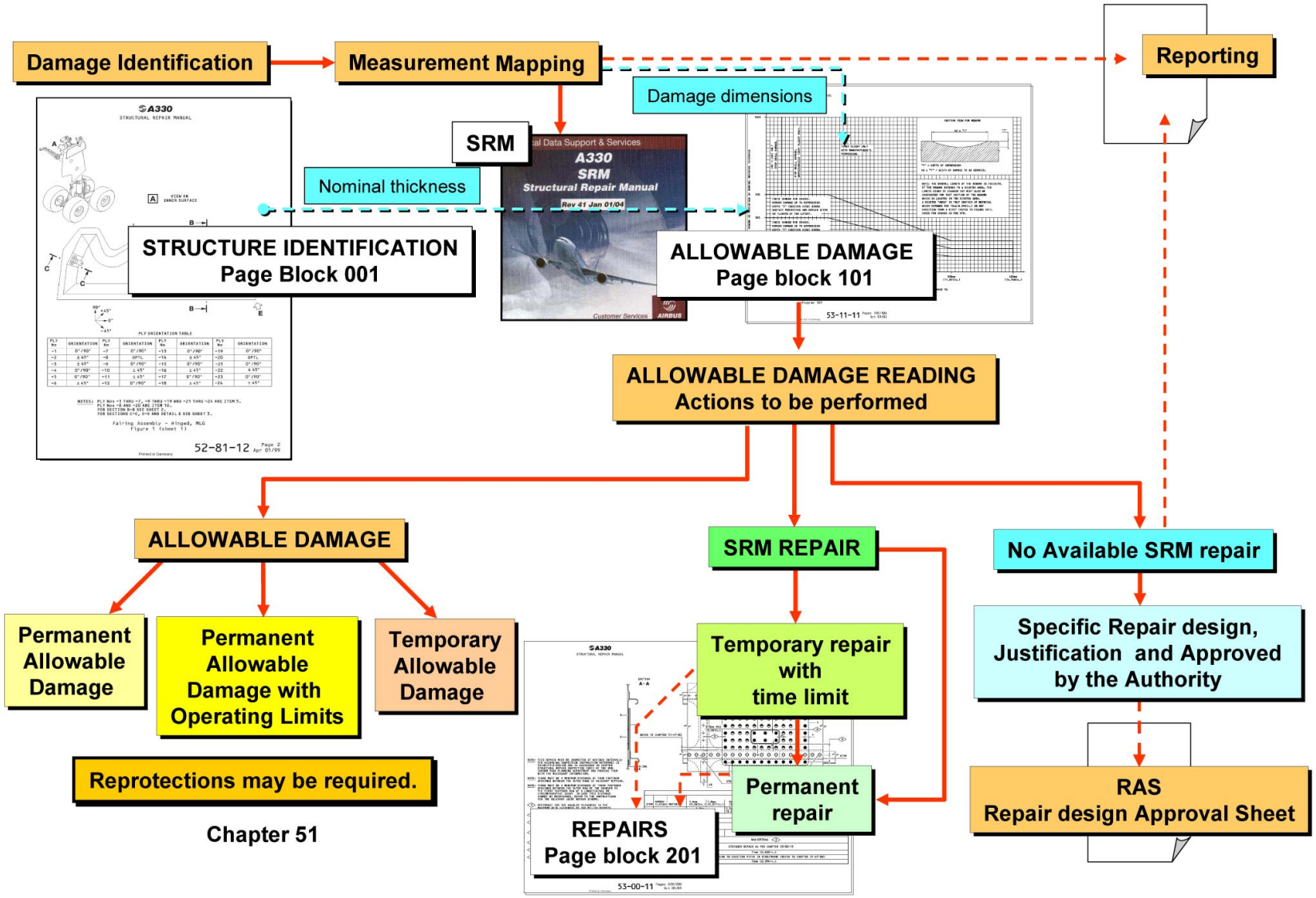

SRM GENERAL USAGE PROCEDURE

DAMAGE ASSESSMENT EXAMPLE 1 D/O (3)

INTRODUCTION

The purpose of this example is to present you, the complete procedure to be followed when a damage is discovered, from the damage mapping up to the final decision making using SRM relevant information. This investigation enables the operator to know whether the damage is allowable or if a repair has to be performed before the release of the A/C. This example was chosen as it represents a common type of damage encountered in service.

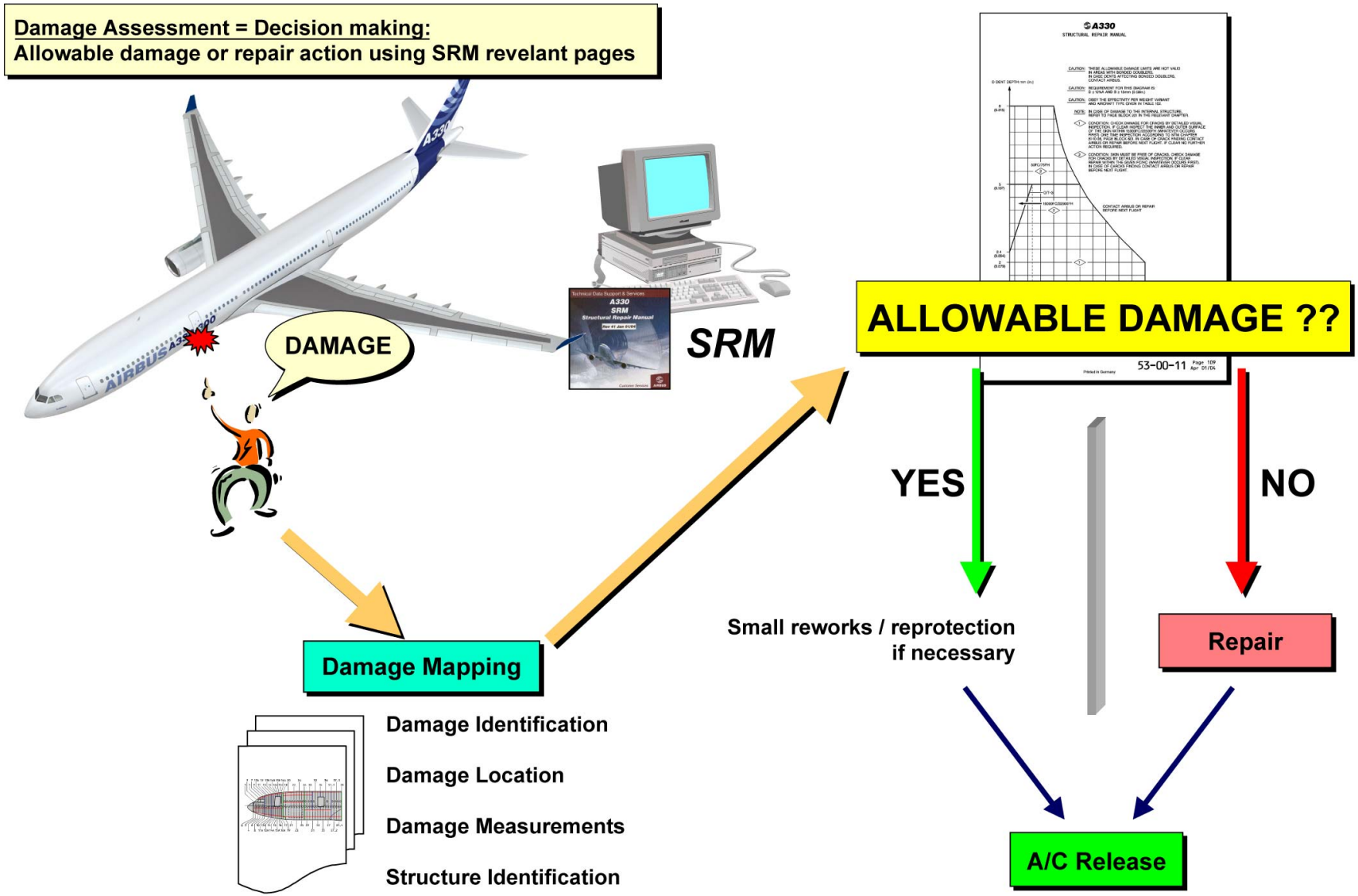

INTRODUCTION

DAMAGE ASSESSMENT EXAMPLE 1 D/O (3)

DAMAGE PRESENTATION

During a routine inspection of the lower half of the fuselage, damage has been detected onto the fuselage skin.
In such situation the AMM refers to the Structural Repair Manual to determine whether the damage is allowable or not and what are the subsequent actions to be performed.
First information: the concerned aircraft is MSN 581 (standard 8)

G7508471 - G3NT1T0 - FM51DG000000001

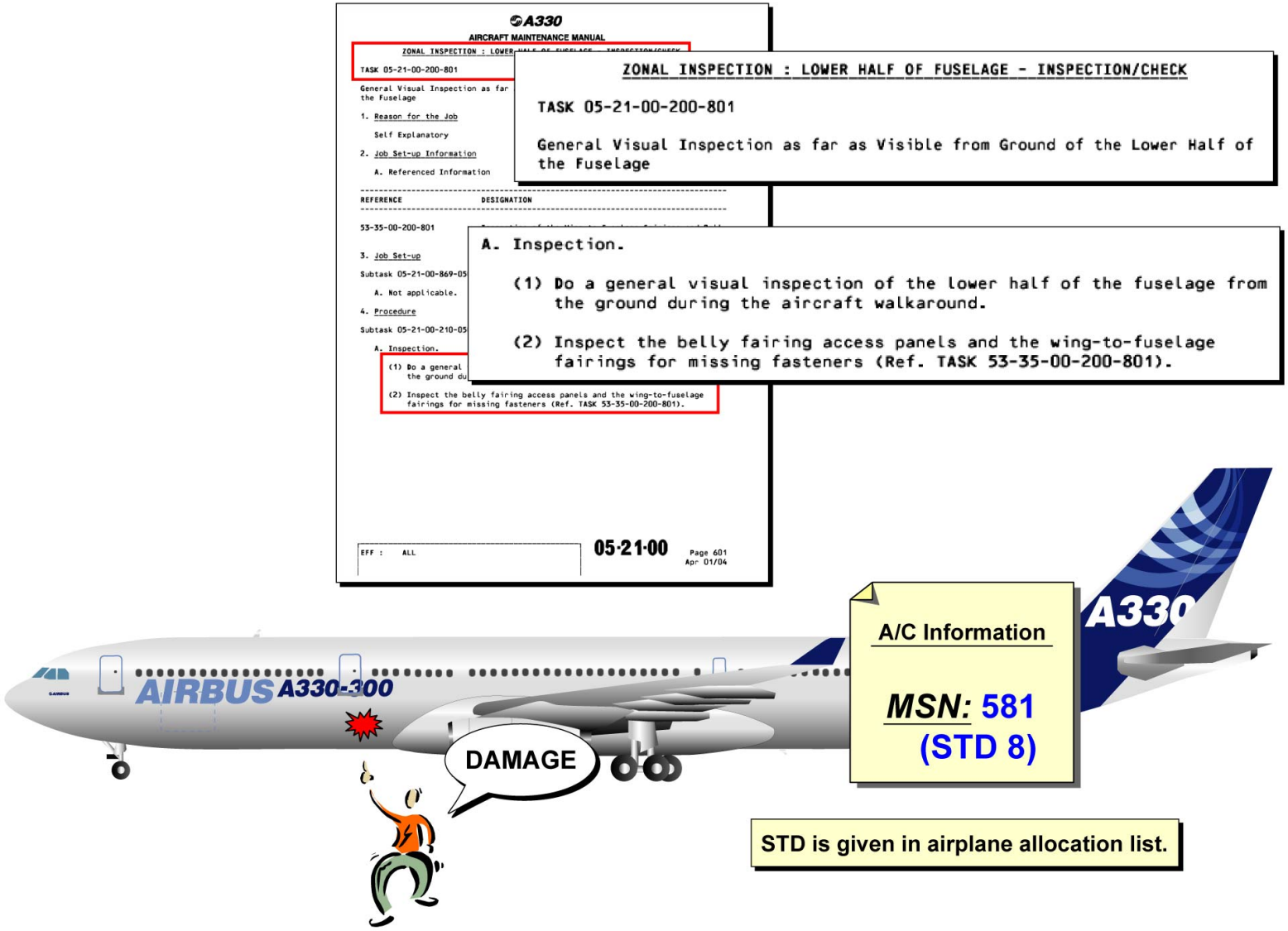

DAMAGE PRESENTATION

DAMAGE ASSESSMENT EXAMPLE 1 D/O (3)

ASSESSMENT STEPS

Using SRM as a guide, the damage assessment process consists in different steps:
On the Aircraft:
- damage identification,
- damage preliminary recording/mapping,
Using the SRM:
- detailed location of the damage,
- full identification of the damaged structure (SRM page block 001 - identification pages),
- allowable damage selection and reading (SRM page block 101 - allowable damage),
- decision making with the result of the assessment.

G7508471 - G3NT1T0 - FM51DG000000001

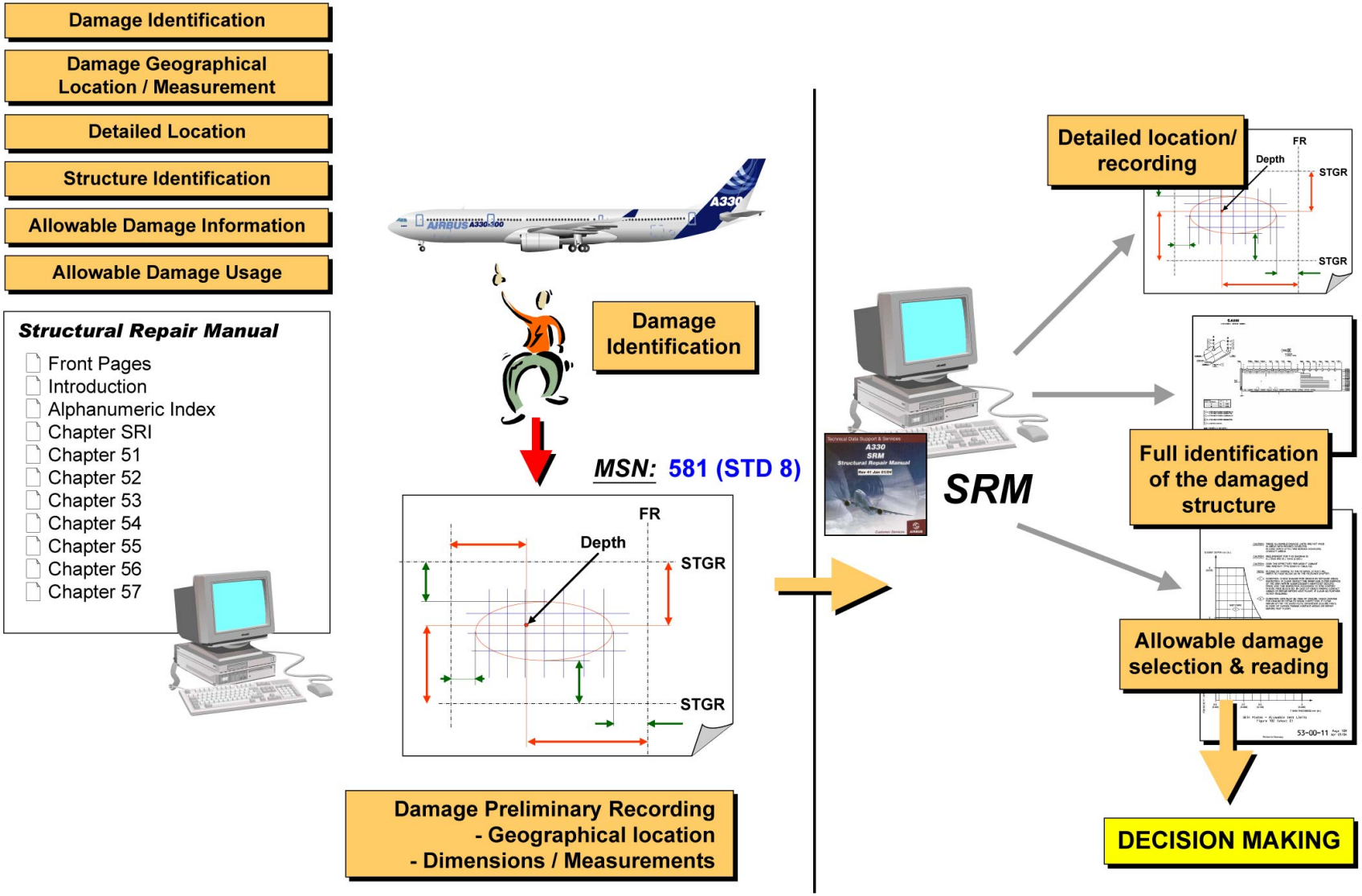

ASSESSMENT STEPS

DAMAGE ASSESSMENT EXAMPLE 1 D/O (3)

DAMAGE IDENTIFICATION

The first step is to identify the type of damage.

G7508471 - G3NT1T0 - FM51DG000000001

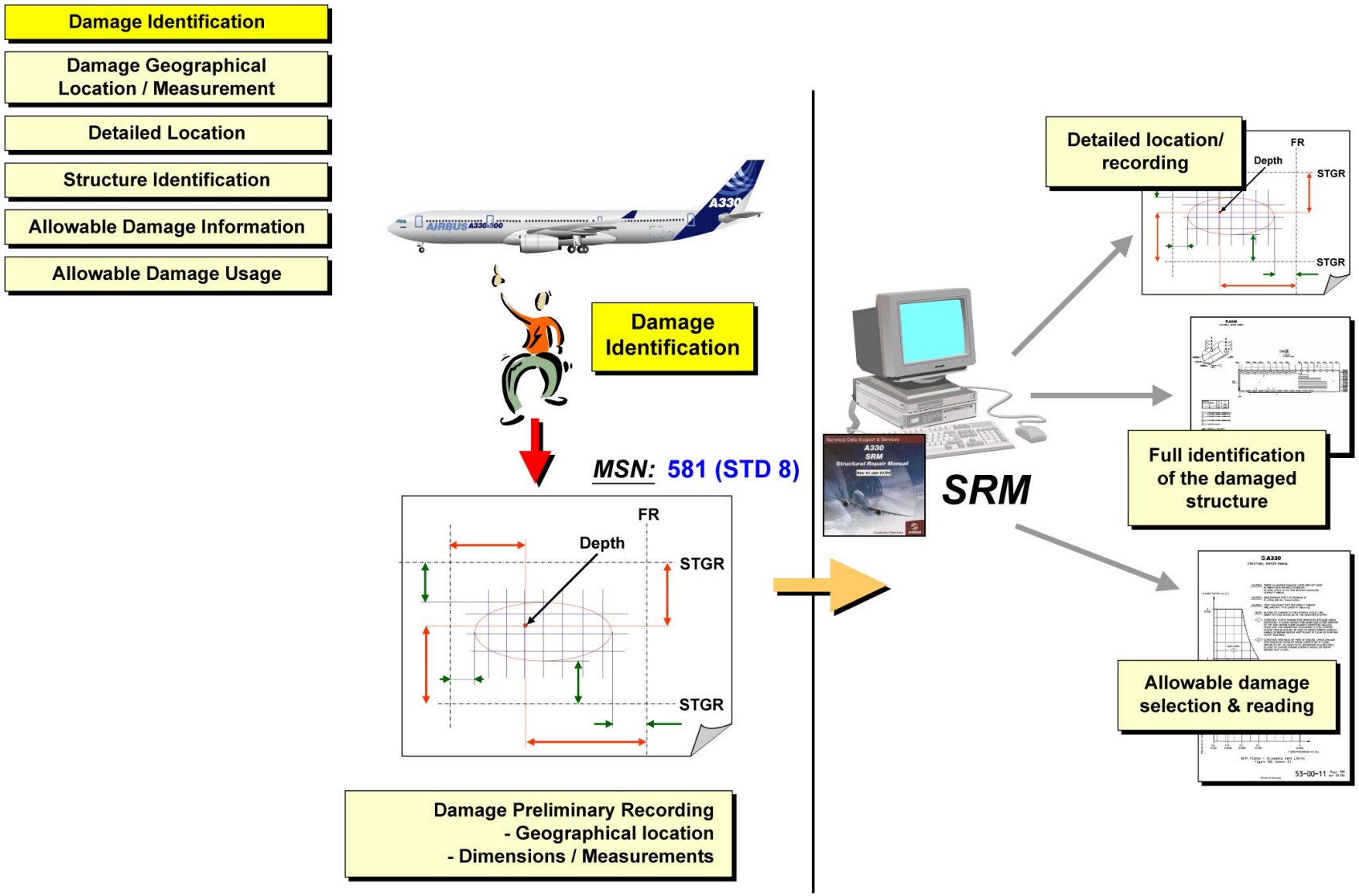

DAMAGE IDENTIFICATION

G7508471 - G3NT1T0 - FM51DG000000001

DAMAGE ASSESSMENT EXAMPLE 1 D/O (3)

DAMAGE IDENTIFICATION (continued)

CONT'D

The definition of the different types of damage are described in SRM 51-11-00 chapter dealing with damage classification. A table gives, for each type of damage, the terminology, the possible causes and the description.
EXAMPLE DATA: The concerned damage is a dent with no visible crack.

G7508471 - G3NT1T0 - FM51DG000000001

- Damage Identification
- Damage Geographical Location / Measurement
- Detailed Location
- Structure Identification
- Allowable Damage Information
- Allowable Damage Usage

Structural Repair Manual

- Front Pages
- Introduction
- Alphanumeric Index
- Chapter SRI
- Chapter 51
  - Table of Contents
  - 51-00-00
  - 51-1...
    - 51-10-00
    - 51-11-00
    - 51-11-11
    - 51-11-12
    - .....
  - 51-2...
  - 51-3...
  - ....
- Chapter 52
- Chapter 53
- Chapter 54
- Chapter 55
- .....

Information related to damage types and definitions is given in Chapter 51-11-00

A330
STRUCTURAL REPAIR MANUAL

TERM	GROUP				DEFINITION
	A	B	C	D	
Scratch	X				A scratch is a line of damage of any depth and length in the material which causes a cross-sectional area change. A sharp object usually causes it.
Gouge	X				A gouge is a damage area of any size which results in a cross-sectional area change. It is usually caused by contact with a relatively sharp object which produces a continuous, sharp or smooth channel-like groove in the material.
Mark	X				A mark is a damaged area of all sizes where a concentration of scratches, nicks, chips, burrs or gouges etc. is shown. You must prepare the damage as an area and not as a series of individual scratches, gouges etc.
Crack	X				A crack is a partial fracture or complete break in the material.
Dent	X				A dent is a damaged area which is pushed in, with respect to its usual contour. There is no cross-sectional area change in the material, area edges are smooth.

Definition of Damage

Table 1

Printed in Germany

51-11-00 Page 3 Oct 01/95

DAMAGE IDENTIFICATION - CONT'D

G7508471 - G3NT1T0 - FM51DG000000001

DAMAGE ASSESSMENT EXAMPLE 1 D/O (3)

DAMAGE GEOGRAPHICAL LOCATION/MEASUREMENT

The Objective of the second step is to establish a preliminary mapping of the damage before any further action using the SRM.

G7508471 - G3NT1T0 - FM51DG000000001

- Damage Identification
- **Damage Geographical Location / Measurement**
- Detailed Location
- Structure Identification
- Allowable Damage Information
- Allowable Damage Usage

Objective:
Record the necessary information from the A/C before starting the SRM Investigation.

Damage Identification

MSN: **581 (STD 8)**

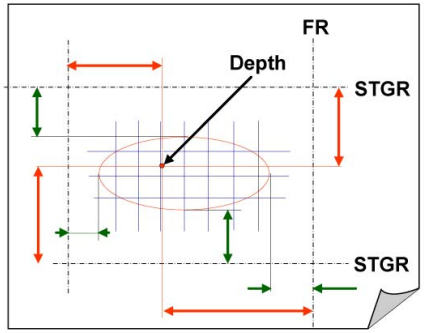

Damage Preliminary Recording
- Geographical location
- Dimensions / Measurements

SRM

Detailed location/ recording

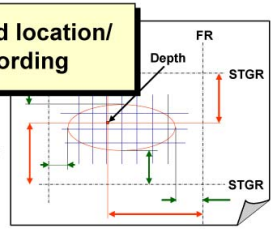

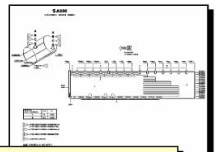

Full identification of the damaged structure

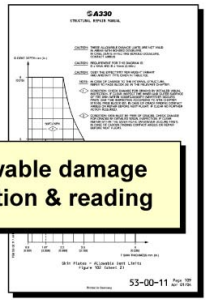

Allowable damage selection & reading

DAMAGE GEOGRAPHICAL LOCATION/MEASUREMENT

DAMAGE ASSESSMENT EXAMPLE 1 D/O (3)

DAMAGE GEOGRAPHICAL LOCATION/MEASUREMENT (continued)

CONT'D

Identify all the visible structure details around the damage area (e.g. longitudinal skin joints, circumferential skin joints, fastener lines, window line, etc...). This is the starting point of any damage location.

G7508471 - G3NT1T0 - FM51DG000000001

- Damage Identification
- **Damage Geographical Location / Measurement**
- Detailed Location
- Structure Identification
- Allowable Damage Information
- Allowable Damage Usage

On the A/C:
Identify all the visible structure details around the damage area (e.g. longitudinal skin joints, circumferential skin joints, fastener lines, window line, ...)

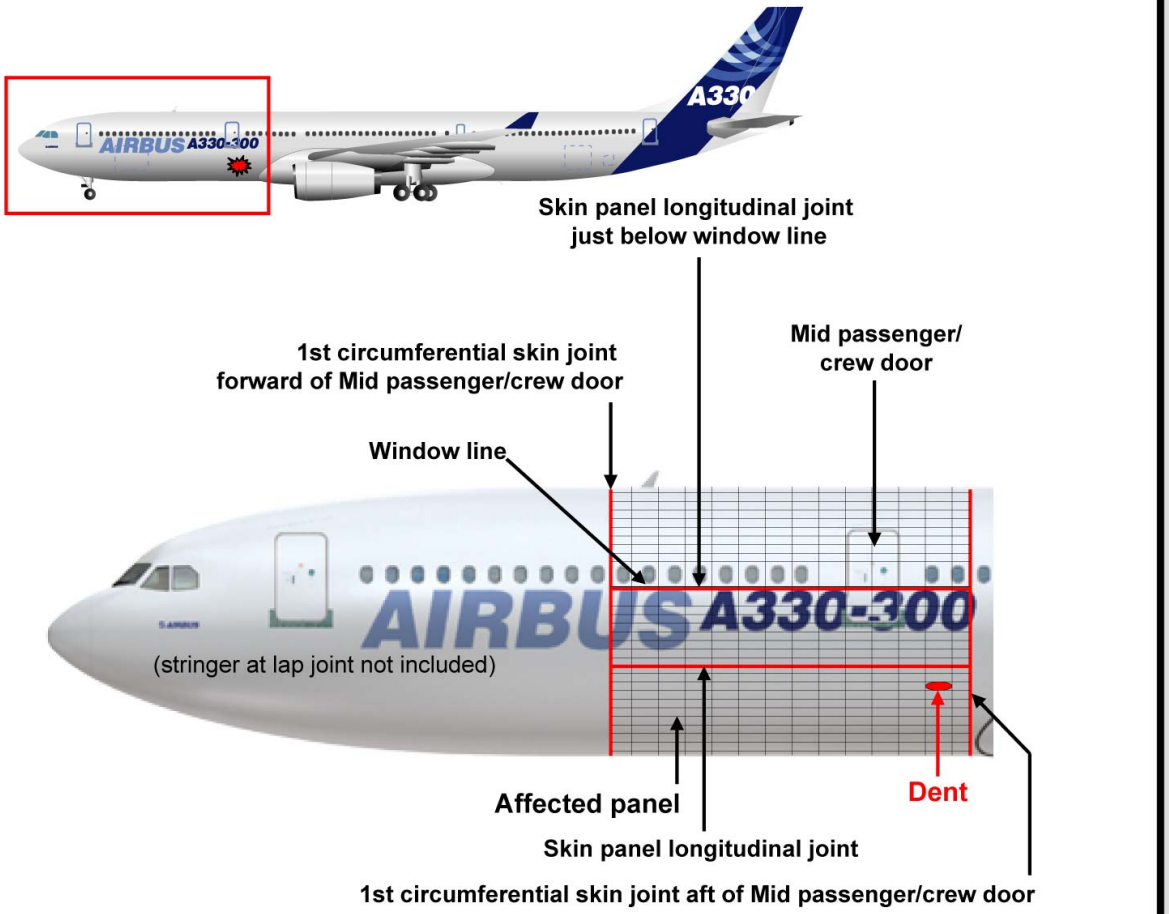

DAMAGE GEOGRAPHICAL LOCATION/MEASUREMENT - CONT'D

DAMAGE ASSESSMENT EXAMPLE 1 D/O (3)

DAMAGE GEOGRAPHICAL LOCATION/MEASUREMENT (continued)

CONT'D

The longitudinal and circumferential skin joints around the damage have been located. The location of the damage in relation to these joints shall be determined using the fastener lines (frame and stringer fasteners lines). This information will be used later to clearly identify the frame numbers and stringer numbers surrounding the affected area.

G7508471 - G3NT1T0 - FM51DG000000001

- Damage Identification
- **Damage Geographical Location / Measurement**
- Detailed Location
- Structure Identification
- Allowable Damage Information
- Allowable Damage Usage

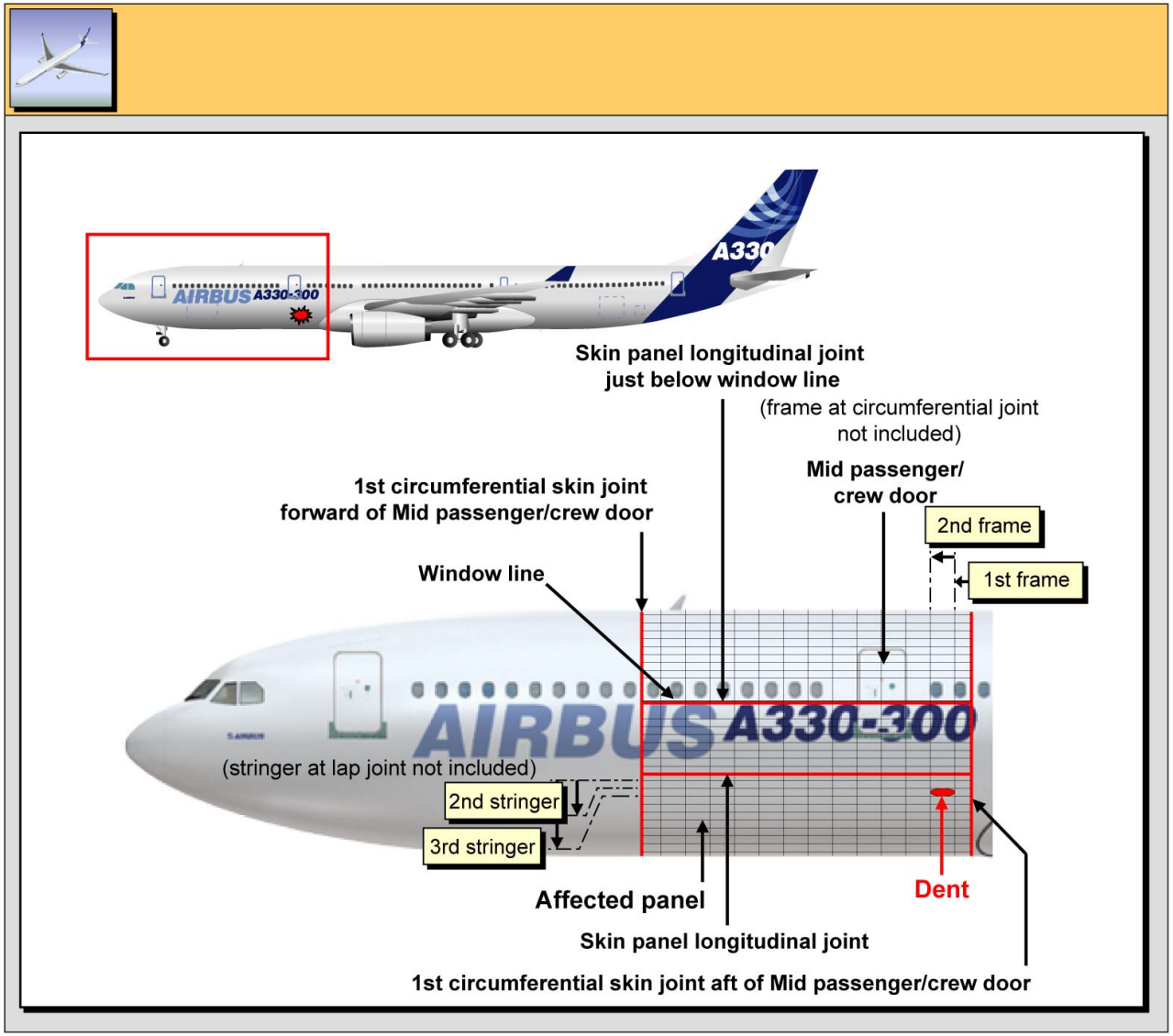

DAMAGE GEOGRAPHICAL LOCATION/MEASUREMENT - CONT'D

G7508471 - G3NT1T0 - FM51DG00000001

DAMAGE ASSESSMENT EXAMPLE 1 D/O (3)

DAMAGE GEOGRAPHICAL LOCATION/MEASUREMENT (continued)

CONT'D

The information collected can be reported onto the damage mapping sheet.

G7508471 - G3NT1T0 - FM51DG000000001

Damage Identification

Damage Geographical Location / Measurement

Detailed Location

Structure Identification

Allowable Damage Information

Allowable Damage Usage

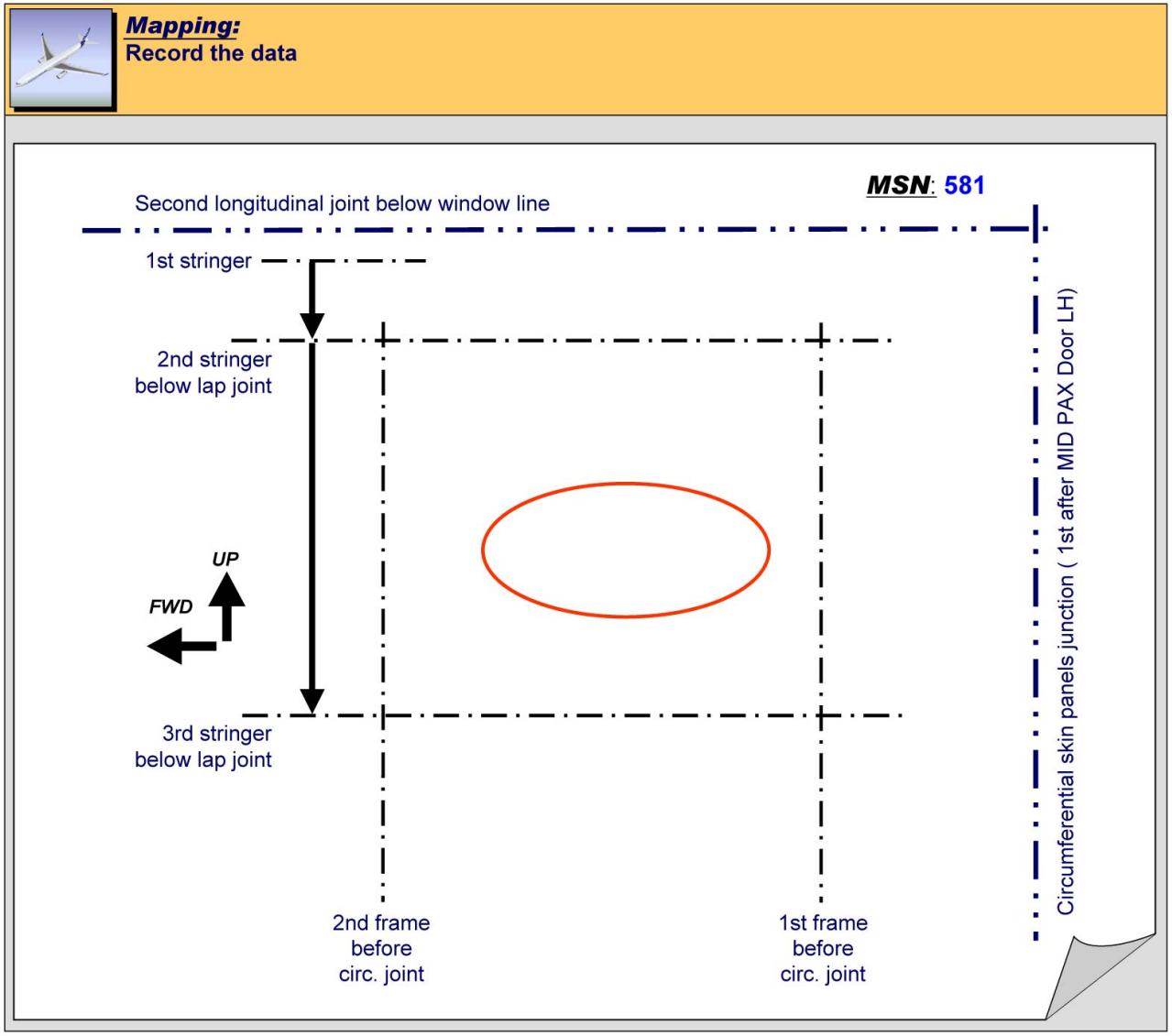

DAMAGE GEOGRAPHICAL LOCATION/MEASUREMENT - CONT'D

G7508471 - G3NT1T0 - FM51DG000000001

DAMAGE ASSESSMENT EXAMPLE 1 D/O (3)

DAMAGE GEOGRAPHICAL LOCATION/MEASUREMENT (continued)

CONT'D

According to the type of damage, some dimensions and measurements have to be done and recorded. SRM chapter 51-11-13 can be used as a guide to collect the correct information from the aircraft.

G7508471 - G3NT1T0 - FM51DG000000001

- Damage Identification
- **Damage Geographical Location / Measurement**
- Detailed Location
- Structure Identification
- Allowable Damage Information
- Allowable Damage Usage

Structural Repair Manual

- Front Pages
- Introduction
- Alphanumeric Index
- Chapter SRI
- Chapter 51
  - Table of Contents
  - 51-00-00
  - 51-1...
    - 51-10-00
    - 51-11-00
    - 51-11-11
    - 51-11-12
    - **51-11-13**
    - .....
  - 51-2...
  - 51-3...
  - ....
- Chapter 52
- Chapter 53
- Chapter 54
- Chapter 55
- .....

On the A/C:

According to the type of damage, some dimensions and measurements have to be done and recorded.

Refer to SRM chapter 51-11-13 for guidance

DAMAGE/DEFECT REPORTING

51-11-13 Page 1 Oct 01/02

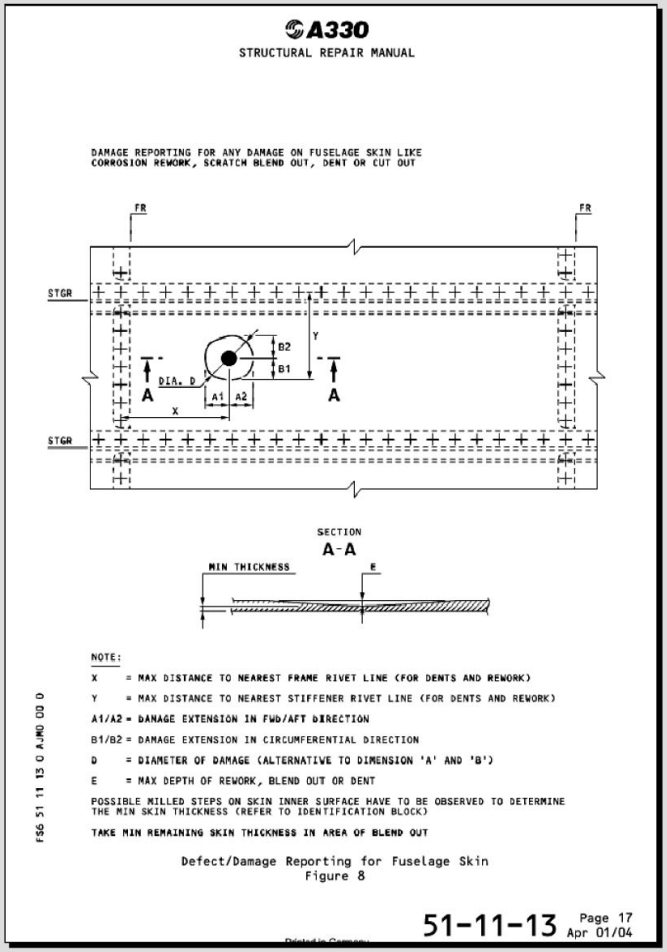

A330
STRUCTURAL REPAIR MANUAL

DAMAGE REPORTING FOR ANY DAMAGE ON FUSELAGE SKIN LIKE CORROSION REWORK, SCRATCH BLEND OUT, DENT OR CUT OUT

NOTE:

X = MAX DISTANCE TO NEAREST FRAME RIVET LINE (FOR DENTS AND REWORK)

Y = MAX DISTANCE TO NEAREST STIFFENER RIVET LINE (FOR DENTS AND REWORK)

A1/A2 = DAMAGE EXTENSION IN FWD/AFT DIRECTION

B1/B2 = DAMAGE EXTENSION IN CIRCUMFERENTIAL DIRECTION

D = DIAMETER OF DAMAGE (ALTERNATIVE TO DIMENSION 'A' AND 'B')

E = MAX DEPTH OF REWORK, BLEND OUT OR DENT

POSSIBLE MILLED STEPS ON SKIN INNER SURFACE HAVE TO BE OBSERVED TO DETERMINE THE MIN SKIN THICKNESS (REFER TO IDENTIFICATION BLOCK)

TAKE MIN REMAINING SKIN THICKNESS IN AREA OF BLEND OUT

FS6 51 11 13 0 AJMD 00 0

Defect/Damage Reporting for Fuselage Skin
Figure 8

51-11-13 Page 17 Apr 01/04

DAMAGE GEOGRAPHICAL LOCATION/MEASUREMENT - CONT'D

G7508471 - G3NT1T0 - FM51DG000000001

DAMAGE ASSESSMENT EXAMPLE 1 D/O (3)

DAMAGE GEOGRAPHICAL LOCATION/MEASUREMENT (continued)

CONT'D

The dent dimensions and distances from the closest skin joints are reported onto the damage mapping.

G7508471 - G3NT1T0 - FM51DG000000001

- Damage Identification
- **Damage Geographical Location / Measurement**
- Detailed Location
- Structure Identification
- Allowable Damage Information
- Allowable Damage Usage

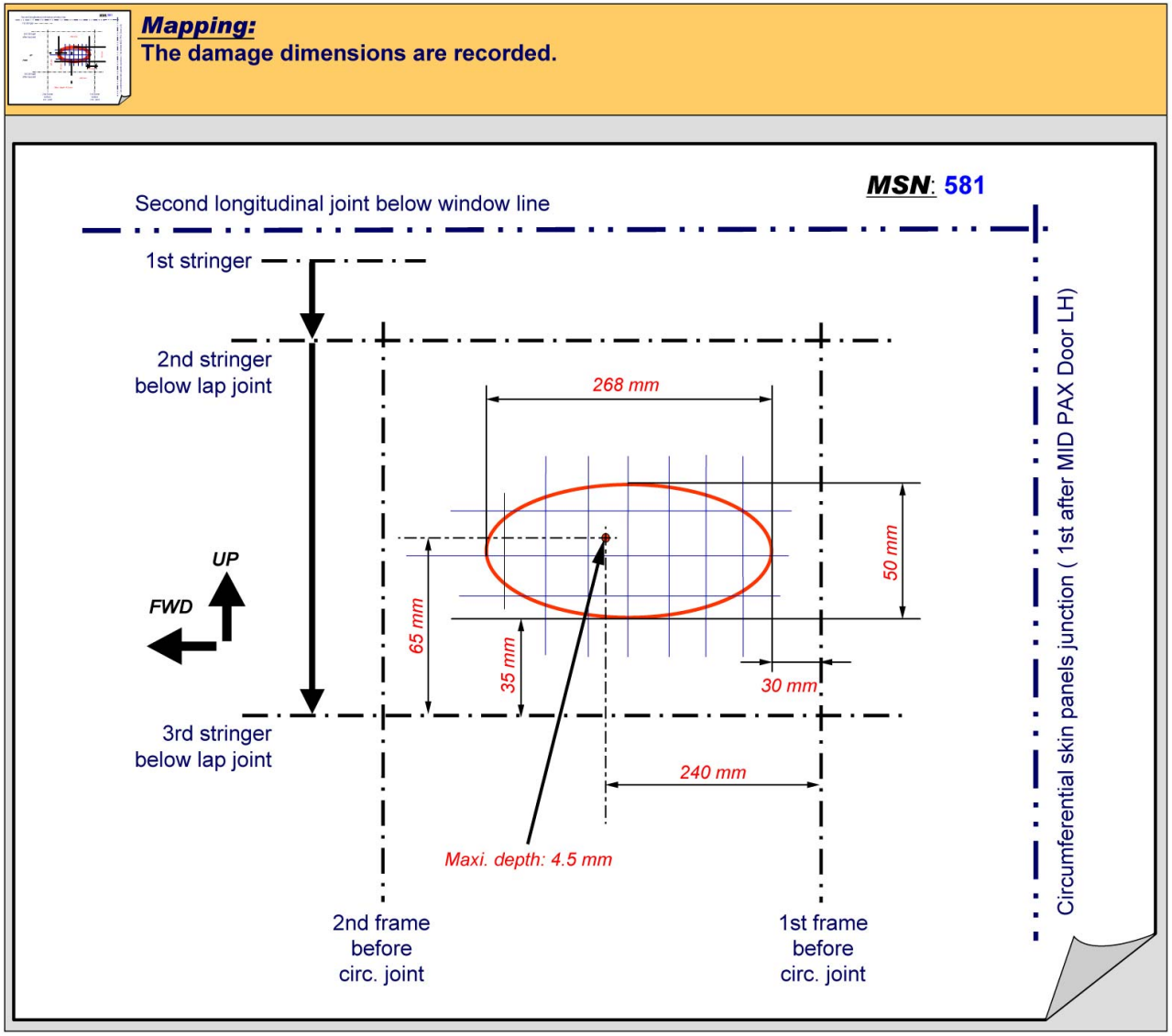

DAMAGE GEOGRAPHICAL LOCATION/MEASUREMENT - CONT'D

G7508471 - G3NT1T0 - FM51DG00000001

DAMAGE ASSESSMENT EXAMPLE 1 D/O (3)

DETAILED LOCATION

Using the data collected from the A/C, the mapping should be completed by determining the exact location (in terms of frame and stringer numbers). This have to be done using the SRM.

G7508471 - G3NT1T0 - FM51DG000000001

- Damage Identification
- Damage Geographical Location / Measurement
- **Detailed Location**
- Structure Identification
- Allowable Damage Information
- Allowable Damage Usage

Objective:
Using the damage data collected from the A/C (geographical location, dimensions,...).
Use the SRM to refine the damage location (Frame numbers, stringer numbers,...).

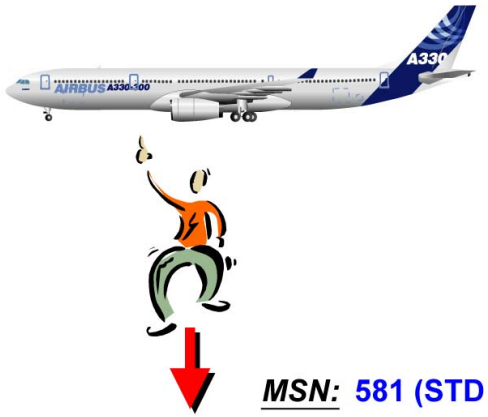

MSN: **581 (STD 8)**

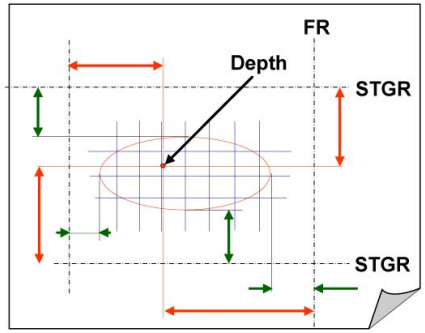

Damage Preliminary Recording
- Geographical location
- Dimensions / Measurements

SRM

Detailed location/ recording

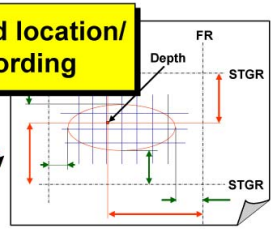

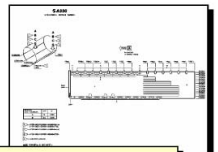

Full identification of the damaged structure

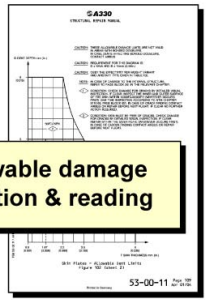

Allowable damage selection & reading

DETAILED LOCATION

DAMAGE ASSESSMENT EXAMPLE 1 D/O (3)

DETAILED LOCATION (continued)

CONT'D

The general section of SRM chapter 53 (53-00-00) provides some illustrations which have to be used to start the identification of the affected area:
- The fuselage sections, with the related border frames,
- The identification of the fuselage skin panels,
- The general frame numbering.

G7508471 - G3NT1T0 - FM51DG000000001

- Damage Identification
- Damage Geographical Location / Measurement
- **Detailed Location**
- Structure Identification
- Allowable Damage Information
- Allowable Damage Usage

Structural Repair Manual

- Front Pages
- Introduction
- Alphanumeric Index
- Chapter SRI
- Chapter 51
- Chapter 52
- **Chapter 53**
  - Table of Contents
  - **53-0...**
    - **53-00-00 – 001**
    - 53-00-00 – 101
    - 53-00-11 – 101
    - 53-00-11 – 201
    - 53-00-11 – 101
    - 53-00-11 – 201
    - 53-00-...
  - 53-1...
  - 53-2...
  - 53-3...
  - 53...
- Chapter 54
- Chapter 55

Structural Repair Manual:
The SRM chapter 53-00-00 provides several illustrations to be used to locate the damage.

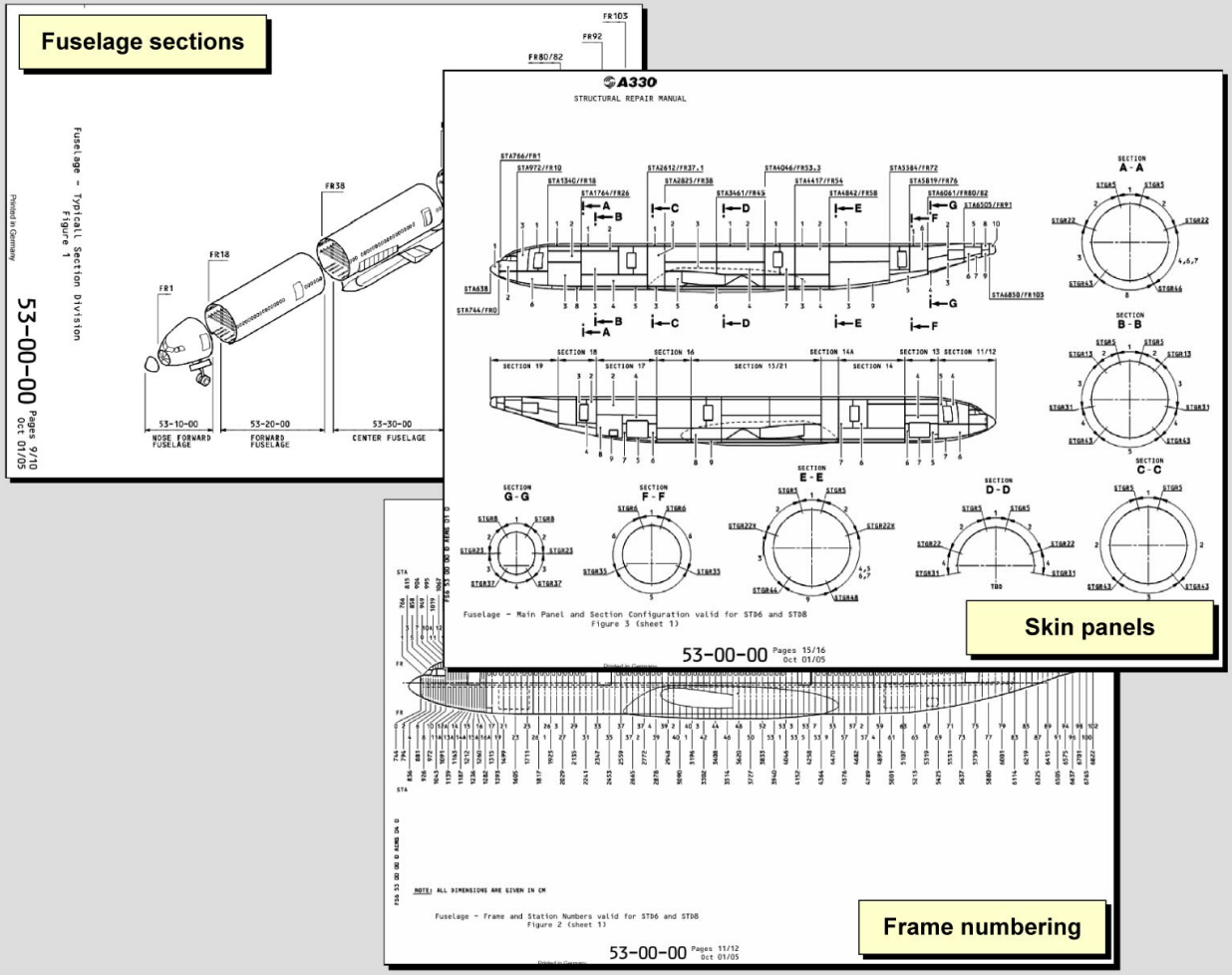

DETAILED LOCATION - CONT'D

DAMAGE ASSESSMENT EXAMPLE 1 D/O (3)

DETAILED LOCATION (continued)

CONT'D

This illustration of chapter 53-00-00 enables the operator to determine concerned fuselage section and its relevant SRM chapter: 53-20-00.

G7508471 - G3NT1T0 - FM51DG000000001

Damage Identification

Damage Geographical Location / Measurement

Detailed Location

Structure Identification

Allowable Damage Information

Allowable Damage Usage

Structural Repair Manual:
Fuselage sections breakdown => Section SRM relevant chapter (53-20-00).

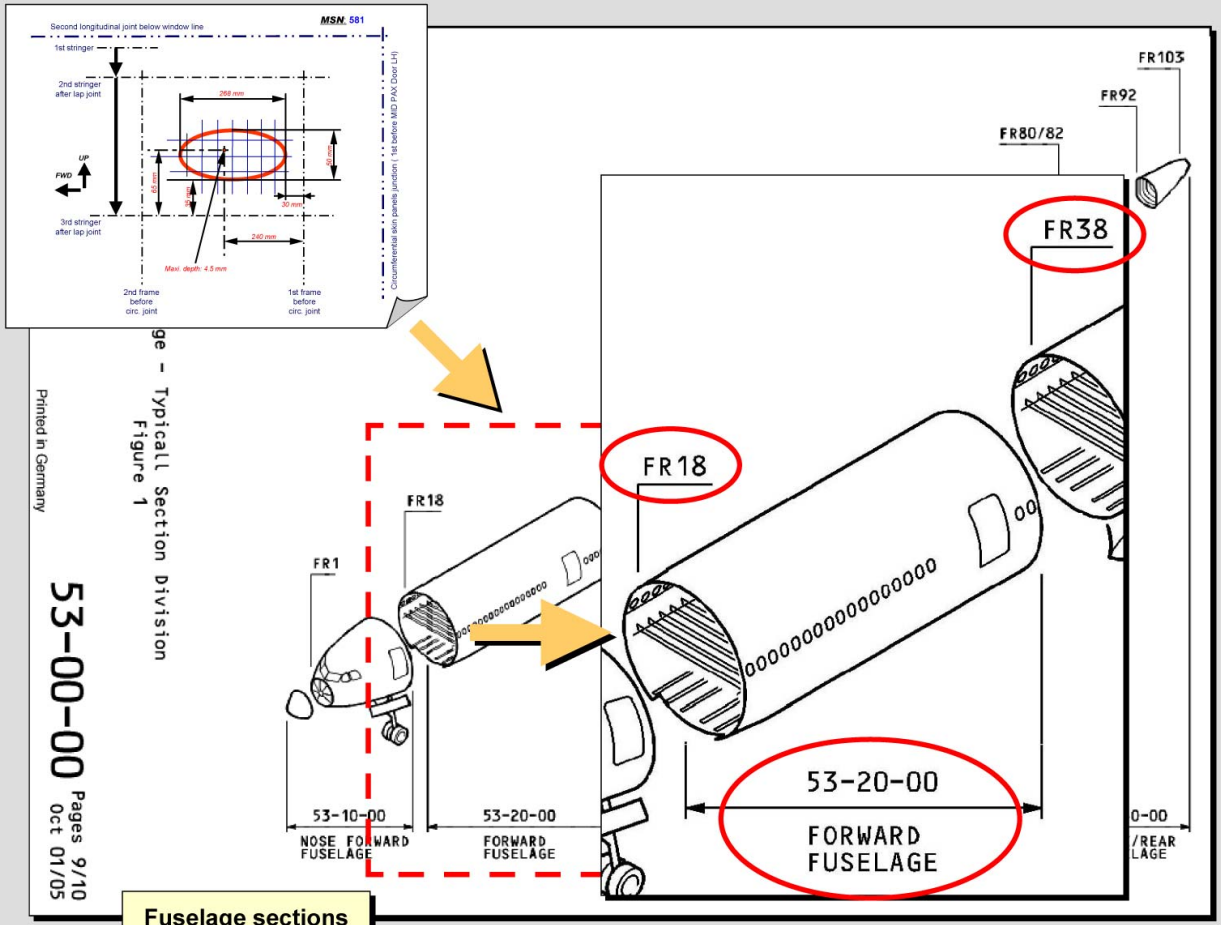

Fuselage sections

Structural Repair Manual

- Front Pages
- Introduction
- Alphanumeric Index
- Chapter SRI
- Chapter 51
- Chapter 52
- **Chapter 53**
  - Table of Contents
  - **53-0...**
    - **53-00-00 – 001**
    - 53-00-00 – 101
    - 53-00-11 – 101
    - 53-00-11 – 201
    - 53-00-11 – 101
    - 53-00-11 – 201
    - 53-00-...
  - 53-1...
  - 53-2...
  - 53-3...
  - 53...
- Chapter 54
- Chapter 55

DETAILED LOCATION - CONT'D

G7508471 - G3NT1T0 - FM51DG000000001

DAMAGE ASSESSMENT EXAMPLE 1 D/O (3)

DETAILED LOCATION (continued)

CONT'D

Using the frame identification of chapter 53-00-00 and the data collected during the damage mapping, the frames surrounding the damage can be determined. According to the mapping information, the damage is located between the first and the second frame before the circumferential joint located at Frame (FR) 37.1. Consequently, the damage is located between FR 36 and 37.

G7508471 - G3NT1T0 - FM51DG000000001

- Damage Identification
- Damage Geographical Location / Measurement
- **Detailed Location**
- Structure Identification
- Allowable Damage Information
- Allowable Damage Usage

Structural Repair Manual

- Front Pages
- Introduction
- Alphanumeric Index
- Chapter SRI
- Chapter 51
- Chapter 52
- **Chapter 53**
  - Table of Contents
  - **53-0...**
    - **53-00-00 – 001**
    - 53-00-00 – 101
    - 53-00-11 – 101
    - 53-00-11 – 201
    - 53-00-11 – 101
    - 53-00-11 – 201
    - 53-00-...
  - 53-1...
  - 53-2...
  - 53-3...
  - 53...
- Chapter 54
- Chapter 55

Structural Repair Manual:
Mapping data + Frame breakdown => circumferential joints (FR 26 and 37.1)
=> frames around damage (FR 36 and 37)

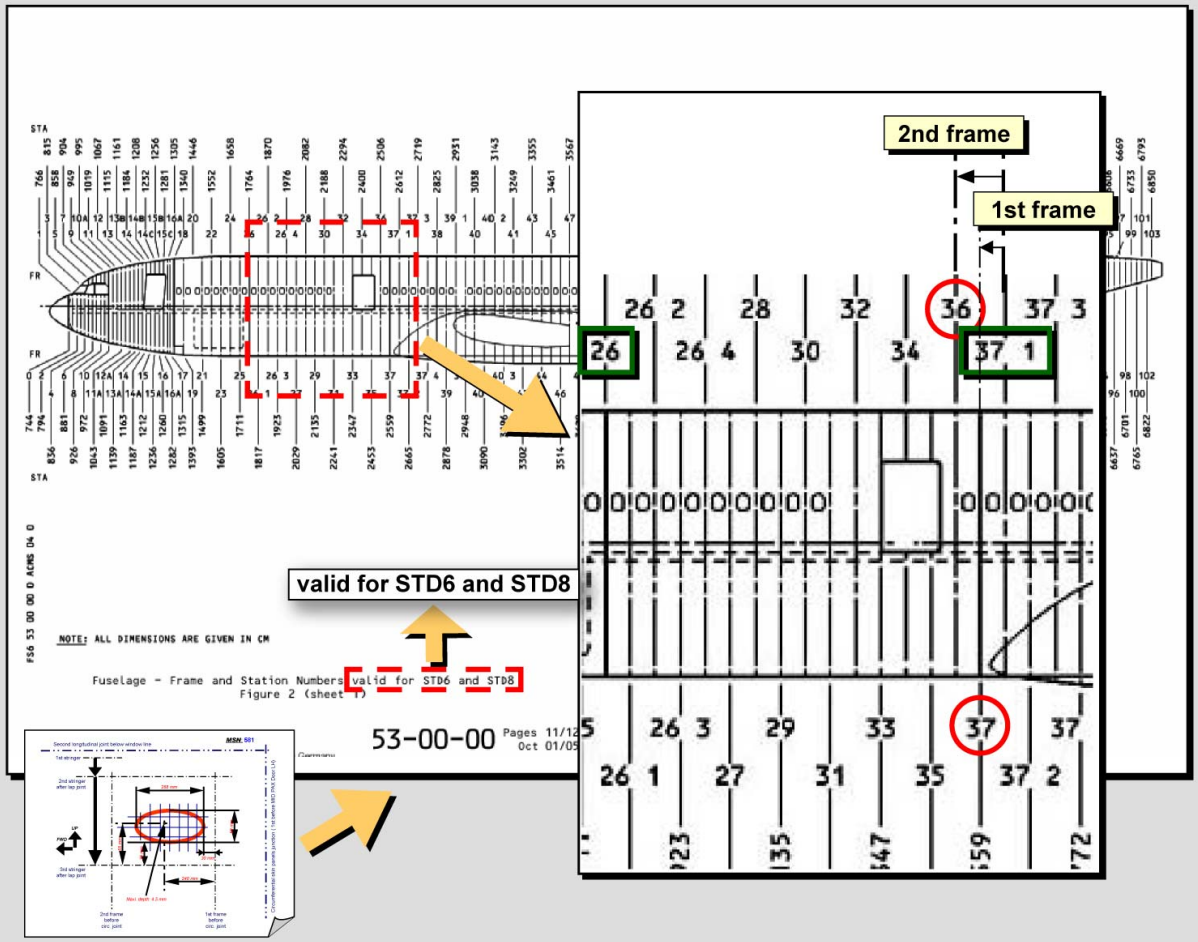

DETAILED LOCATION - CONT'D

DAMAGE ASSESSMENT EXAMPLE 1 D/O (3)

DETAILED LOCATION (continued)

CONT'D

To complete the damage location, the stringers surrounding the damage need also to be determined. For this purpose, the "General panel identification" illustrations given in chapter 53-00-00 can be used. According to the data collected onto the A/C and location of the damage from the closest longitudinal skin joints, the affected panel can be determined. For this example, the damage is located on panel 4 - lower side shell.

G7508471 - G3NT1T0 - FM51DG000000001

- Damage Identification
- Damage Geographical Location / Measurement
- **Detailed Location**
- Structure Identification
- Allowable Damage Information
- Allowable Damage Usage

Structural Repair Manual

- Front Pages
- Introduction
- Alphanumeric Index
- Chapter SRI
- Chapter 51
- Chapter 52
- **Chapter 53**
  - Table of Contents
  - **53-0...**
    - **53-00-00 – 001**
    - 53-00-00 – 101
    - 53-00-11 – 101
    - 53-00-11 – 201
    - 53-00-11 – 101
    - 53-00-11 – 201
    - 53-00-...
  - 53-1...
  - 53-2...
  - 53-3...
  - 53...
- Chapter 54
- Chapter 55

Structural Repair Manual:
Mapping data + skin panel configuration => Affected panel identification + stringer No at longitudinal joints.

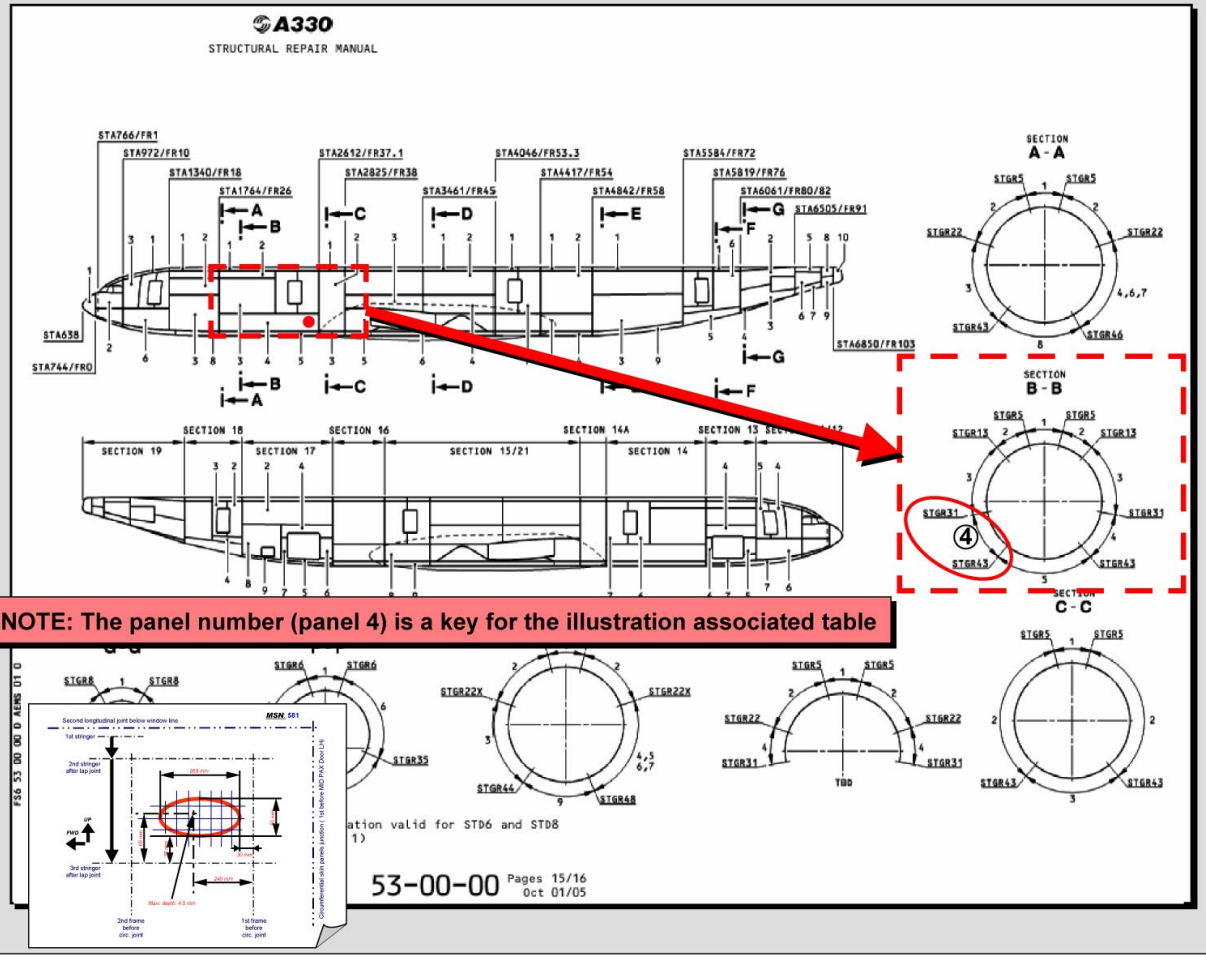

NOTE: The panel number (panel 4) is a key for the illustration associated table

DETAILED LOCATION - CONT'D

DAMAGE ASSESSMENT EXAMPLE 1 D/O (3)

DETAILED LOCATION (continued)

CONT'D

Panel 4 is located between STGR 31LH and 43LH, and FR 26 and 37.1.

G7508471 - G3NT1T0 - FM51DG000000001

- Damage Identification
- Damage Geographical Location / Measurement
- **Detailed Location**
- Structure Identification
- Allowable Damage Information
- Allowable Damage Usage

Structural Repair Manual

- Front Pages
- Introduction
- Alphanumeric Index
- Chapter SRI
- Chapter 51
- Chapter 52
- **Chapter 53**
  - Table of Contents
  - **53-0...**
    - **53-00-00 – 001**
    - 53-00-00 – 101
    - 53-00-11 – 101
    - 53-00-11 – 201
    - 53-00-11 – 101
    - 53-00-11 – 201
    - 53-00-...
  - 53-1...
  - 53-2...
  - 53-3...
  - 53...
- Chapter 54
- Chapter 55

Structural Repair Manual:

Mapping data + skin panel configuration => Affected panel identification + stringer No at longitudinal joints (panel 4, between stringers 31LH and 43LH).

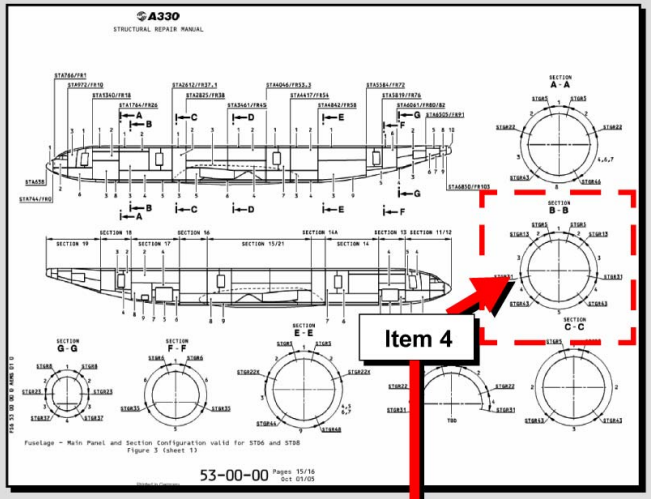

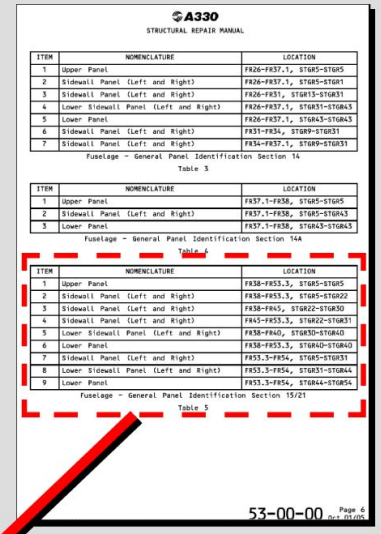

ITEM	NOMENCLATURE	LOCATION
1	Upper Panel	FR26-FR37.1, STGR5-STGR5
2	Sidewall Panel (Left and Right)	FR26-FR37.1, STGR5-STGR1
3	Sidewall Panel (Left and Right)	FR26-FR31, STGR13-STGR31
4	Lower Sidewall Panel (Left and Right)	FR26-FR37.1, STGR31-STGR43
5	Lower Panel	FR26-FR37.1, STGR43-STGR43
6	Sidewall Panel (Left and Right)	FR31-FR34, STGR9-STGR31
7	Sidewall Panel (Left and Right)	FR34-FR37.1, STGR9-STGR31

Fuselage - General Panel Identification Section 14

Table 3

DETAILED LOCATION - CONT'D

DAMAGE ASSESSMENT EXAMPLE 1 D/O (3)

DETAILED LOCATION (continued)

CONT'D

To identify the surrounding stringers, this illustration extracted from the AMM chapter 06 can be used but will have to be confirmed during the detailed location step. According to this illustration, the damage is located between STGR 33LH and 34LH.

G7508471 - G3NT1T0 - FM51DG000000001

- Damage Identification
- Damage Geographical Location / Measurement
- **Detailed Location**
- Structure Identification
- Allowable Damage Information
- Allowable Damage Usage

Structural Repair Manual

- Front Pages
- Introduction
- Alphanumeric Index
- Chapter SRI
- Chapter 51
- Chapter 52
- **Chapter 53**
  - Table of Contents
  - **53-0...**
    - **53-00-00 – 001**
    - 53-00-00 – 101
    - 53-00-11 – 101
    - 53-00-11 – 201
    - 53-00-11 – 101
    - 53-00-11 – 201
    - 53-00-...
  - 53-1...
  - 53-2...
  - 53-3...
  - 53...
- Chapter 54
- Chapter 55

To identify the surrounding stringers, this illustration extacted from the AMM chapter 06 can be used, but will have to be confirmed during the detailed location step. (Damage located between stringers 33LH and 34LH)

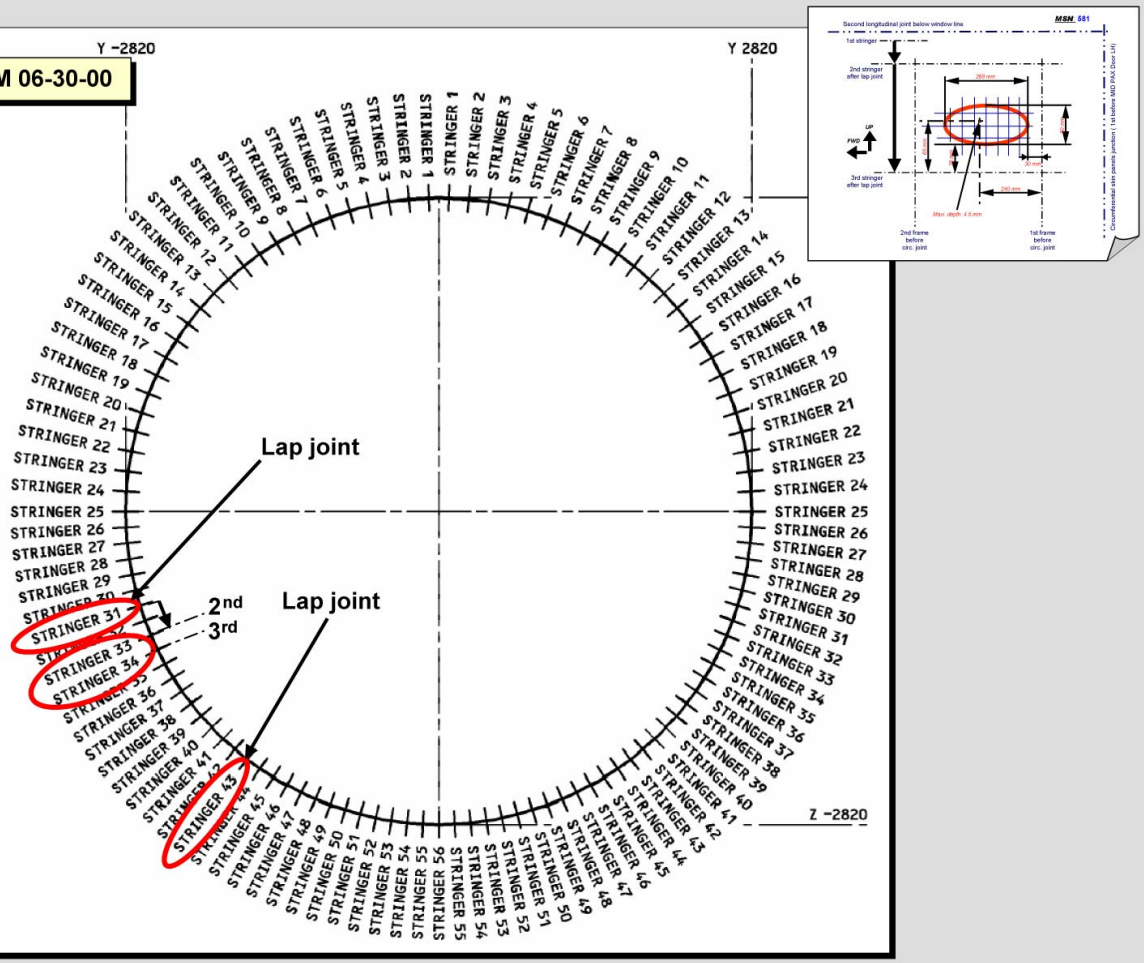

DETAILED LOCATION - CONT'D

DAMAGE ASSESSMENT EXAMPLE 1 D/O (3)

DETAILED LOCATION (continued)

CONT'D

The damage mapping can now be completed with the frame and stringer numbers.

G7508471 - G3NT1T0 - FM51DG000000001

- Damage Identification
- Damage Geographical Location / Measurement
- **Detailed Location**
- Structure Identification
- Allowable Damage Information
- Allowable Damage Usage

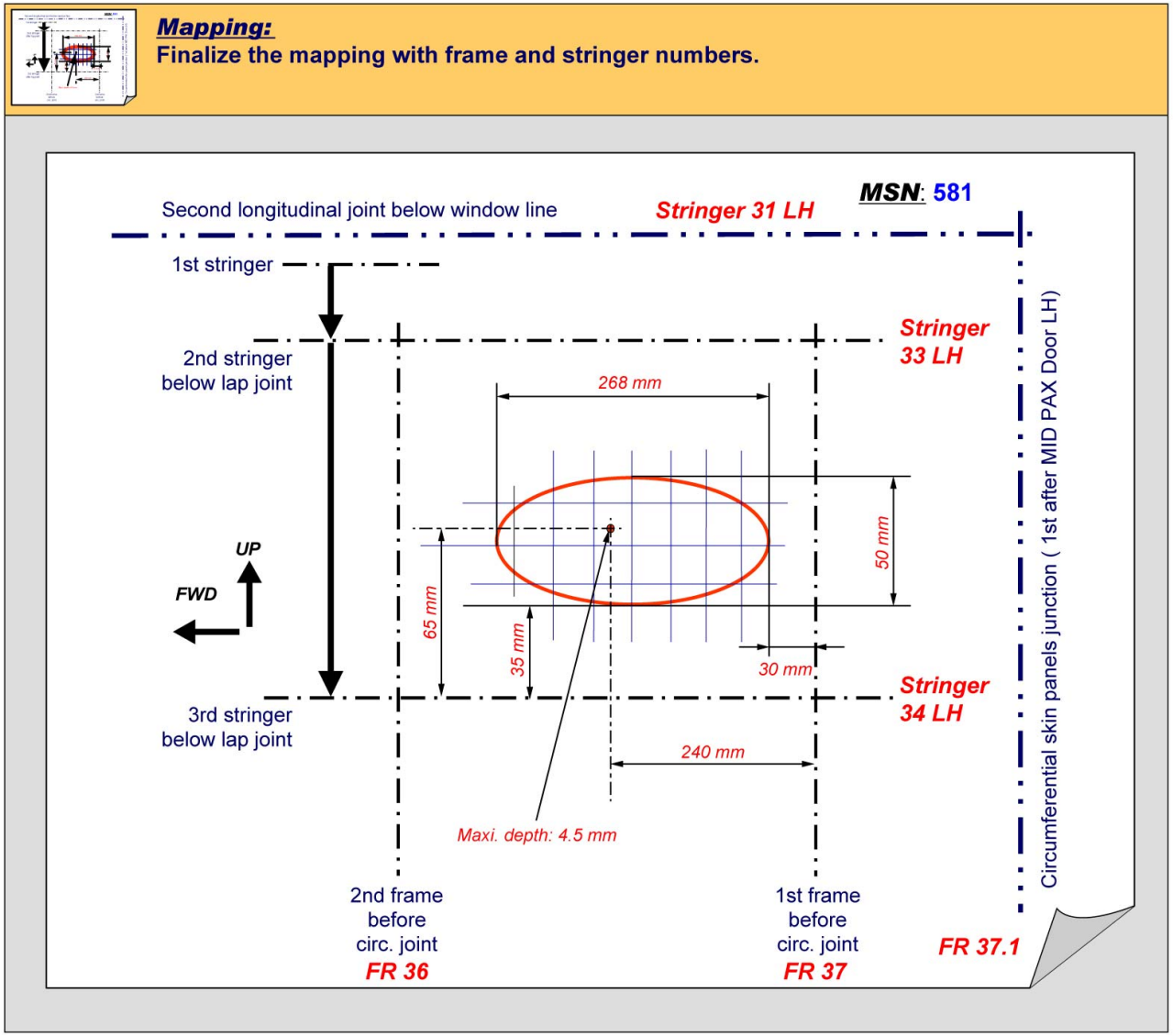

DETAILED LOCATION - CONT'D

G7508471 - G3NT1T0 - FM51DG000000001

DAMAGE ASSESSMENT EXAMPLE 1 D/O (3)

structure identification

The exact stringer numbers surrounding the damage need to be confirmed and we have to define the skin thickness in the affected area. For this purpose, the information provided in the identification page block of the concerned panel has to be used.

G7508471 - G3NT1T0 - FM51DG000000001

- Damage Identification
- Damage Geographical Location / Measurement
- Detailed Location
- **Structure Identification**
- Allowable Damage Information
- Allowable Damage Usage

Objective:
Using the data collected from the A/C and the detailed location of the damage: Identify the affected panel and define the skin thickness in the damaged area.

Damage Identification

MSN: **581 (STD 8)**

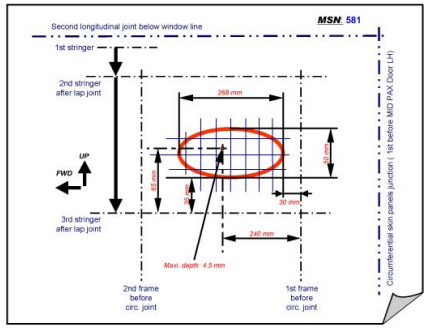

Damage Preliminary Recording
- Geographical location
- Dimensions / Measurements

SRM

Detailed location/ recording

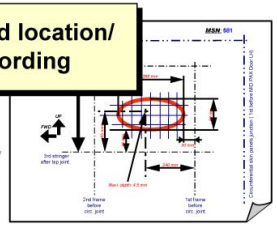

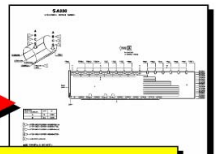

Full identification of the damaged structure

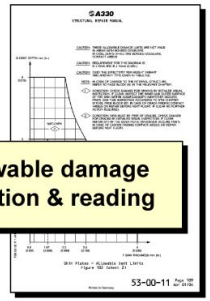

Allowable damage selection & reading

STRUCTURE IDENTIFICATION

DAMAGE ASSESSMENT EXAMPLE 1 D/O (3)

structure identification (continued)

CONT'D

The "fuselage section division" illustration of chapter 53-00-00 used before gives the definition of the affected section: Forward fuselage - chapter 53-20-00. The general illustration of 53-20-00 identifies the main structural arrangement of the forward fuselage.

G7508471 - G3NT1T0 - FM51DG000000001

Damage Identification

Damage Geographical Location / Measurement

Detailed Location

Structure Identification

Allowable Damage Information

Allowable Damage Usage

Structural Repair Manual

- Front Pages
- Introduction
- Alphanumeric Index
- Chapter SRI
- Chapter 51
- Chapter 52
- Chapter 53
  - Table of Contents
  - 53-0...
    - 53-00-00 – 001
    - 53-00-00 – 101
    - 53-00-11 – 101
    - 53-00-11 – 201
    - 53-00-11 – 101
    - 53-00-11 – 201
    - 53-00-...
  - 53-1...
  - 53-2...
  - 53-3...
  - 53...
- Chapter 54
- Chapter 55

Structural Repair Manual:
The general ilustration of chapter 53-00-00, provides the SRM section (chapter) you have to refer to for the identification of the damaged panel: 53-20-00

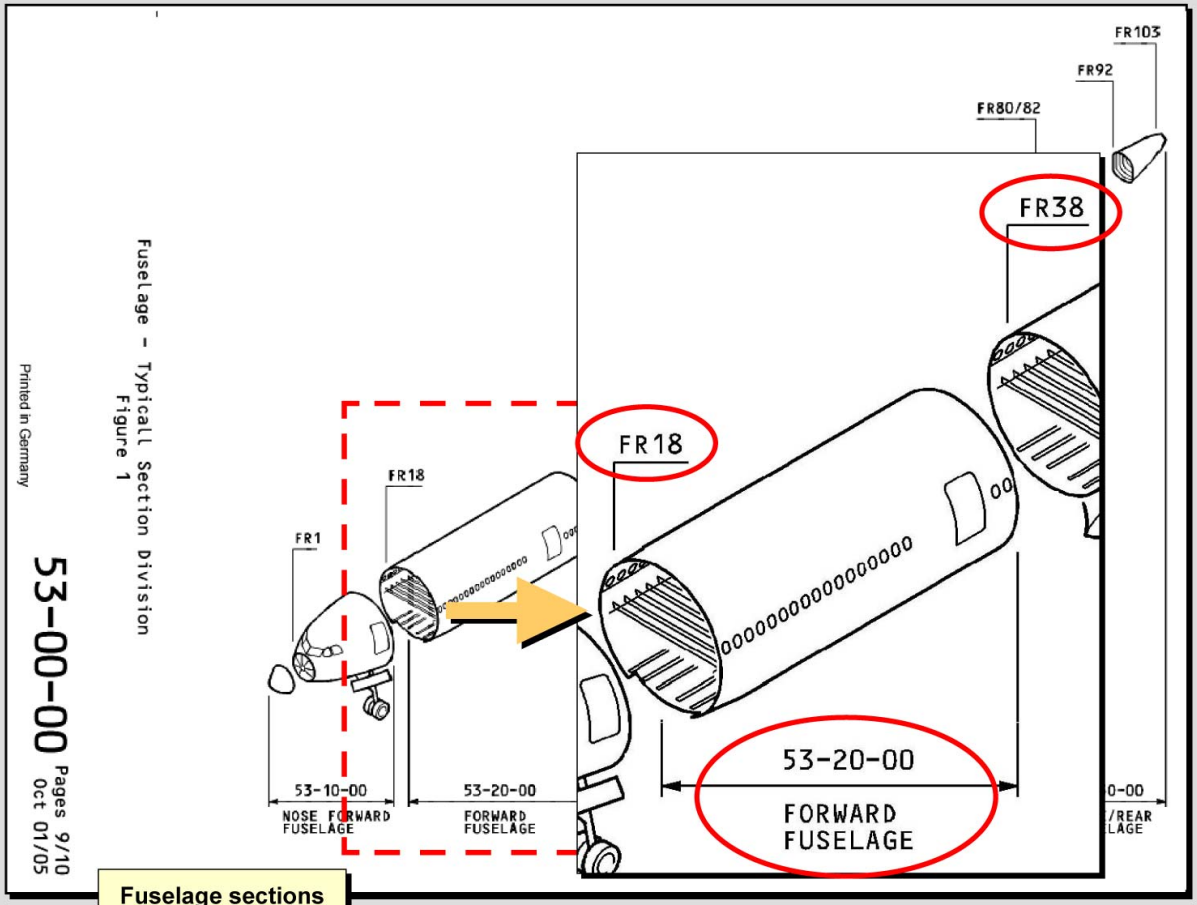

Fuselage sections

STRUCTURE IDENTIFICATION - CONT'D

DAMAGE ASSESSMENT EXAMPLE 1 D/O (3)

structure identification (continued)

CONT'D

The skin plates are part of the main structure, covered by section 53-21-00.

G7508471 - G3NT1T0 - FM51DG000000001

Damage Identification

Damage Geographical Location / Measurement

Detailed Location

Structure Identification

Allowable Damage Information

Allowable Damage Usage

Structural Repair Manual

- Front Pages
- Introduction
- Alphanumeric Index
- Chapter SRI
- Chapter 51
- Chapter 52
- **Chapter 53**
  - Table of Contents
  - 53-0...
  - 53-1...
  - **53-2...**
    - **53-20-00 – 001**
    - 53-21-00 – 001
    - 53-21-11 – 001
    - 53-21-11 – 101
    - 53-21-11 – 201
    - 53-21-12 – 001
    - 53-21-12 – 101
    - 53-21-12 – 201
    - 53-21-13 – 001
    - 53-2 -...
- Chapter 54
- Chapter 55

As per the general illustration of 53-20-00 refer to 53-21-00 - Forward fuselage.
The affected panel is part of this main structure.

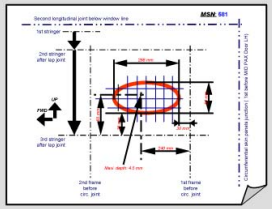

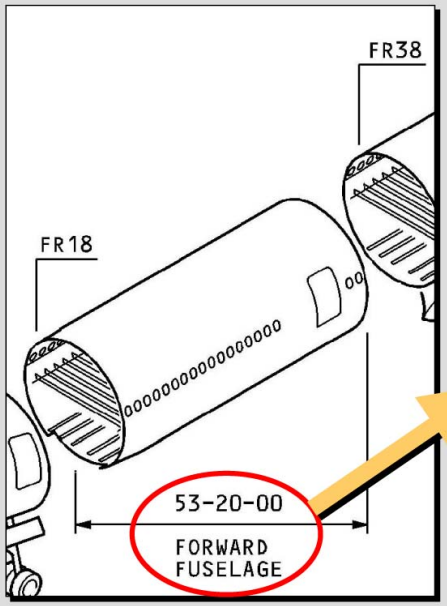

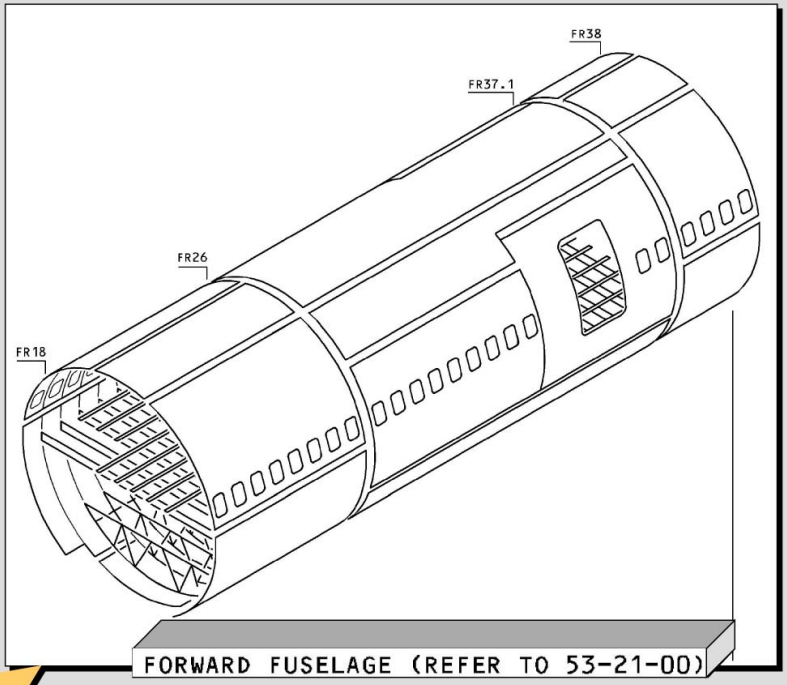

STRUCTURE IDENTIFICATION - CONT'D

G7508471 - G3NT1T0 - FM51DG00000001

DAMAGE ASSESSMENT EXAMPLE 1 D/O (3)

structure identification (continued)

CONT'D

Following SRM 53-21-00 guidelines, the figure shows that the affected skin panel (skin plate) is item 13. The associated nomenclature refers to SRM 53-21-11 for the full identification of the skin panels.

G7508471 - G3NT1T0 - FM51DG000000001

Damage Identification

Damage Geographical Location / Measurement

Detailed Location

Structure Identification

Allowable Damage Information

Allowable Damage Usage

Structural Repair Manual

- Front Pages
- Introduction
- Alphanumeric Index
- Chapter SRI
- Chapter 51
- Chapter 52
- **Chapter 53**
  - Table of Contents
  - 53-0...
  - 53-1...
  - **53-2...**
    - 53-20-00 – 001
    - **53-21-00 – 001**
    - 53-21-11 – 001
    - 53-21-11 – 101
    - 53-21-11 – 201
    - 53-21-12 – 001
    - 53-21-12 – 101
    - 53-21-12 – 201
    - 53-21-13 – 001
    - 53-2 -...
- Chapter 54
- Chapter 55

As per the general illustration of 53-21-00 and its associated nomenclature, skin plates (Items 1 to 24) are covered within section 53-21-11.

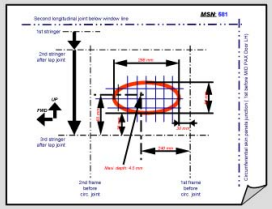

The damage affects item number 13.

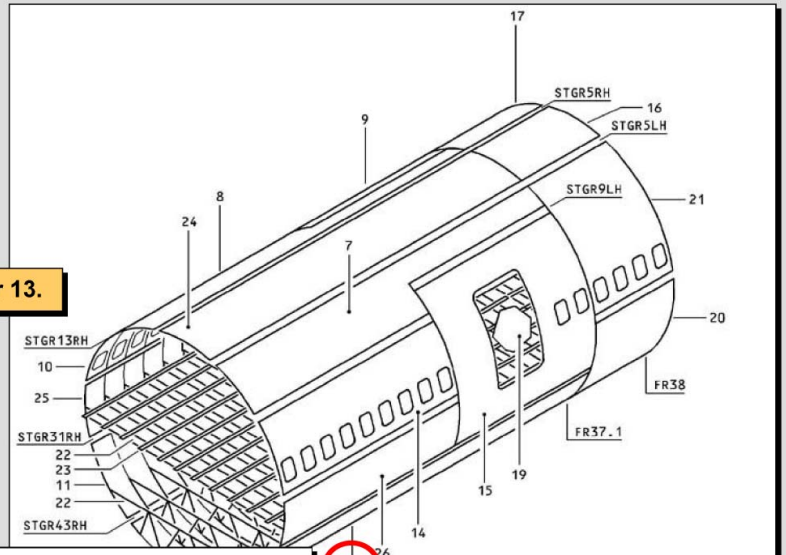

A330
STRUCTURAL REPAIR MANUAL

MAIN STRUCTURE

1. Structural Arrangement

ITEM	NOMENCLATURE	REFER TO
-	Structural Arrangement	Figure 1
1-24	Skin Plates (Panel 1 thru 24)	53-21-11
-	Frames (not illustrated)	53-21-12
-	Stringers and Skin Stiffeners (not illustrated)	53-21-13

CONFIG-1
CONFIG-2

53-21-00 Page 1 Feb 01/02

Forward Fuselage - Layout - valid for A330-300
Figure 1 (sheet 1)

53-21-00 Page 3 Jul 01/02

STRUCTURE IDENTIFICATION - CONT'D

G7508471 - G3NT1T0 - FM51DG000000001

DAMAGE ASSESSMENT EXAMPLE 1 D/O (3)

structure identification (continued)

CONT'D

All the skin panels (plates) of the forward fuselage are listed within the nomenclature located at the front page of SRM 53-21-11.
Using the information collected just before (affected panel: lower side panel - left, between FR 26 & 37.1 and STGR 31 & 43), the nomenclature provides the figure number we have to refer to: "Skin plates - LWR parts LH FR 26 to FR 37.1: REFER TO Figure 10 (sheet 1 & 2)".

G7508471 - G3NT1T0 - FM51DG000000001

- Damage Identification
- Damage Geographical Location / Measurement
- Detailed Location
- **Structure Identification**
- Allowable Damage Information
- Allowable Damage Usage

Structural Repair Manual

- Front Pages
- Introduction
- Alphanumeric Index
- Chapter SRI
- Chapter 51
- Chapter 52
- **Chapter 53**
  - Table of Contents
  - 53-0...
  - 53-1...
  - **53-2...**
    - 53-20-00 – 001
    - 53-21-00 – 001
    - **53-21-11 – 001**
    - 53-21-11 – 101
    - 53-21-11 – 201
    - 53-21-12 – 001
    - 53-21-12 – 101
    - 53-21-12 – 201
    - 53-21-13 – 001
    - 53-2 -...
- Chapter 54
- Chapter 55

The first page of 53-21-11 lists the different skin plates of this fuselage section. the nomenclature gives the figure number we have to refer to: "Skin plates - LWR parts LH FR 26 to FR 37.1: REFER TO Figure 10 (sheet 1 & 2)".

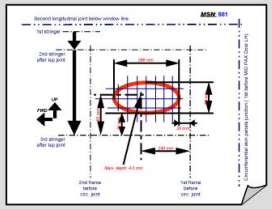

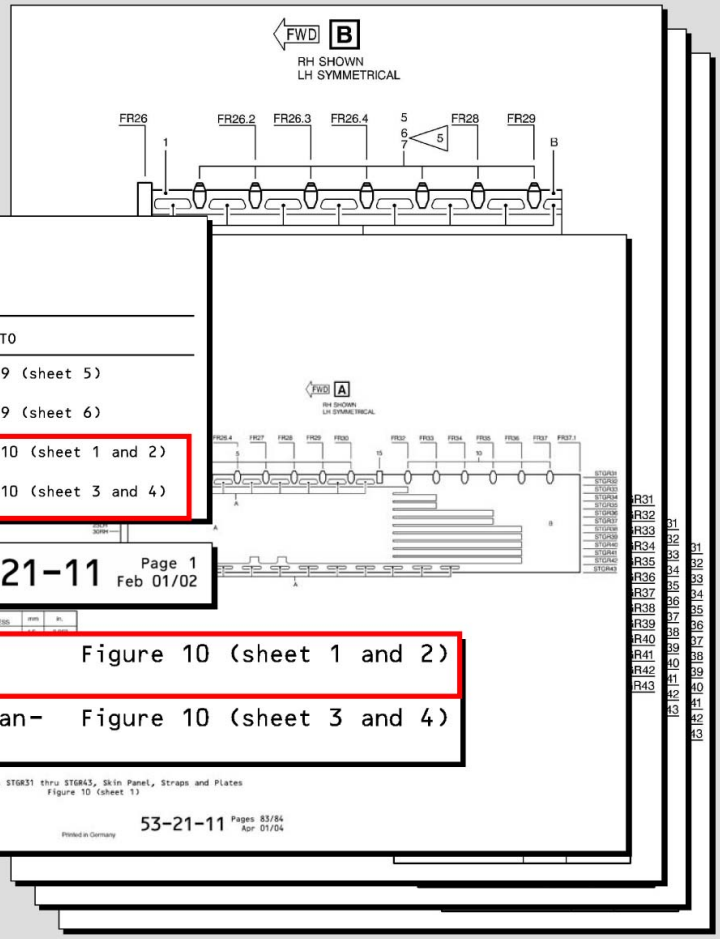

A330
STRUCTURAL REPAIR MANUAL

ITEM	NOMENCLATURE	REFER TO
-	FR26-FR31, STGR22LH thru STGR31LH, Skin Panel, Reinforcements and Straps	Figure 9 (sheet 5)
-	FR26-FR31, STGR22RH thru STGR31RH, Skin Panel, Reinforcements and Straps	Figure 9 (sheet 6)
-	FR26-FR37.1, STGR31 thru STGR43, Skin Panel, Straps and Plates	Figure 10 (sheet 1 and 2)
-	FR26-FR38, STGR31 thru STGR43, Skin Pan-el, Straps and Plates	Figure 10 (sheet 3 and 4)

53-21-11 Page 1 Feb 01/02

-	FR26-FR37.1, STGR31 thru STGR43, Skin Panel, Straps and Plates	Figure 10 (sheet 1 and 2)
-	FR26-FR38, STGR31 thru STGR43, Skin Pan-el, Straps and Plates	Figure 10 (sheet 3 and 4)

FR26-FR37.1, STGR31 thru STGR43, Skin Panel, Straps and Plates
Figure 10 (sheet 1)
53-21-11 Pages 83/84 Apr 01/04

STRUCTURE IDENTIFICATION - CONT'D

DAMAGE ASSESSMENT EXAMPLE 1 D/O (3)

structure identification (continued)

CONT'D

The figure 1 is related to four different sheets. As mentioned in the last page, sheets 1 and 2 have to be considered. Different versions of the same panel are illustrated. This represents the evolutions according to production modifications. The next step of the investigation is to find the applicable version for MSN 581.

G7508471 - G3NT1T0 - FM51DG000000001

- Damage Identification
- Damage Geographical Location / Measurement
- Detailed Location
- **Structure Identification**
- Allowable Damage Information
- Allowable Damage Usage

Structural Repair Manual

- Front Pages
- Introduction
- Alphanumeric Index
- Chapter SRI
- Chapter 51
- Chapter 52
- **Chapter 53**
  - Table of Contents
  - 53-0...
  - 53-1...
  - **53-2...**
    - 53-20-00 – 001
    - 53-21-00 – 001
    - **53-21-11 – 001**
    - 53-21-11 – 101
    - 53-21-11 – 201
    - 53-21-12 – 001
    - 53-21-12 – 101
    - 53-21-12 – 201
    - 53-21-13 – 001
    - 53-2 -...
- Chapter 54
- Chapter 55

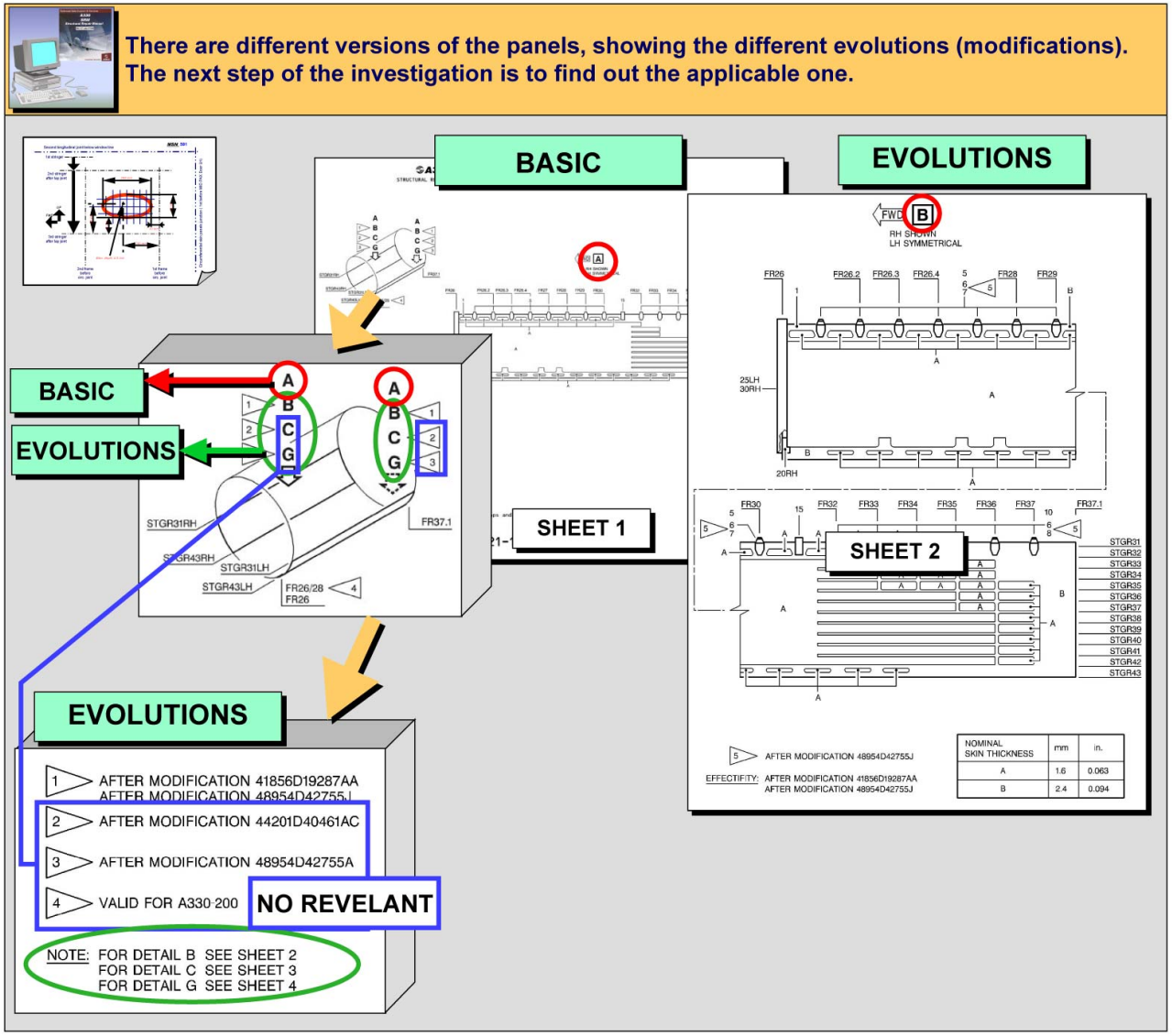

STRUCTURE IDENTIFICATION - CONT'D

DAMAGE ASSESSMENT EXAMPLE 1 D/O (3)

structure identification (continued)

CONT'D

There are two panel configurations illustrated, showing the basic version of the panel (view A) and one other possible version effective after embodiment of production modification(s) (view B). The modification numbers are indicated at the bottom of the page (flag note 1 is associated to view B).
Views C and G refer to sheets 3 and 4 which concerns the A330-200 version; thus, these sheets shall not be taken into account.
The next step of the investigation is to define which of these panels (vew A or B) is installed on the MSN 581.

G7508471 - G3NT1T0 - FM51DG000000001

- Damage Identification
- Damage Geographical Location / Measurement
- Detailed Location
- **Structure Identification**
- Allowable Damage Information
- Allowable Damage Usage

Structural Repair Manual

- Front Pages
- Introduction
- Alphanumeric Index
- Chapter SRI
- Chapter 51
- Chapter 52
- **Chapter 53**
  - Table of Contents
  - 53-0...
  - 53-1...
  - **53-2...**
    - 53-20-00 – 001
    - 53-21-00 – 001
    - **53-21-11 – 001**
    - 53-21-11 – 101
    - 53-21-11 – 201
    - 53-21-12 – 001
    - 53-21-12 – 101
    - 53-21-12 – 201
    - 53-21-13 – 001
    - 53-2 -...
- Chapter 54
- Chapter 55

Among these two panels, which one is the relevant; basic version (sheet 1) or evolution (sheet 2)?

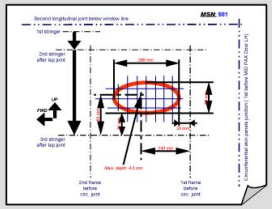

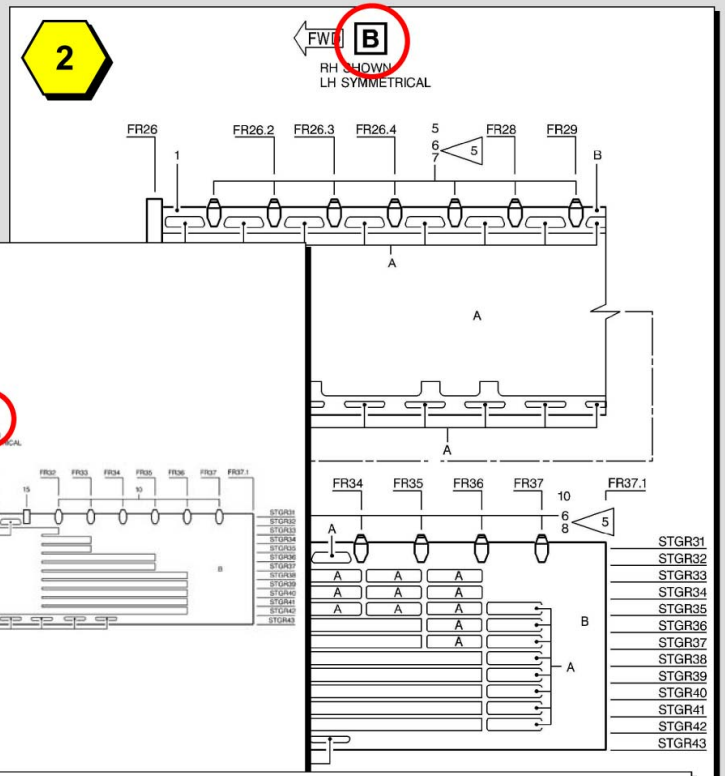

FR26-FR37.1, STGR31 thru STGR43, Skin Panel, Straps and Plates
Figure 12 (sheet 2)

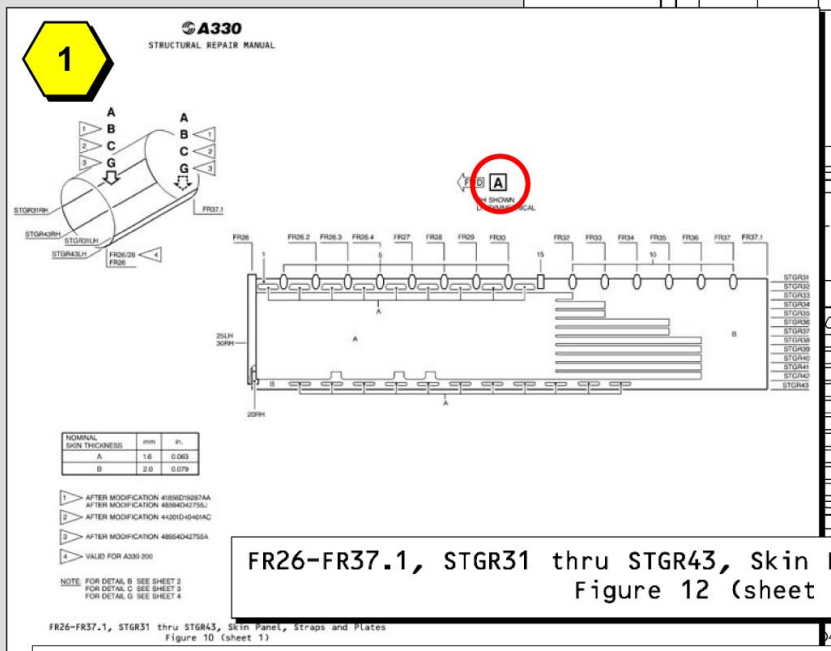

FR26-FR37.1, STGR31 thru STGR43, Skin Panel, Straps and Plates
Figure 12 (sheet 1)

STRUCTURE IDENTIFICATION - CONT'D

DAMAGE ASSESSMENT EXAMPLE 1 D/O (3)

structure identification (continued)

CONT'D

The panel illustrated by the view A has no associated flag note (modification) since this is the basic version.

G7508471 - G3NT1T0 - FM51DG000000001

Damage Identification

Damage Geographical Location / Measurement

Detailed Location

Structure Identification

Allowable Damage Information

Allowable Damage Usage

Structural Repair Manual

- Front Pages
- Introduction
- Alphanumeric Index
- Chapter SRI
- Chapter 51
- Chapter 52
- **Chapter 53**
  - Table of Contents
  - 53-0...
  - 53-1...
  - **53-2...**
    - 53-20-00 – 001
    - 53-21-00 – 001
    - **53-21-11 – 001**
    - 53-21-11 – 101
    - 53-21-11 – 201
    - 53-21-12 – 001
    - 53-21-12 – 101
    - 53-21-12 – 201
    - 53-21-13 – 001
    - 53-2 -...
- Chapter 54
- Chapter 55

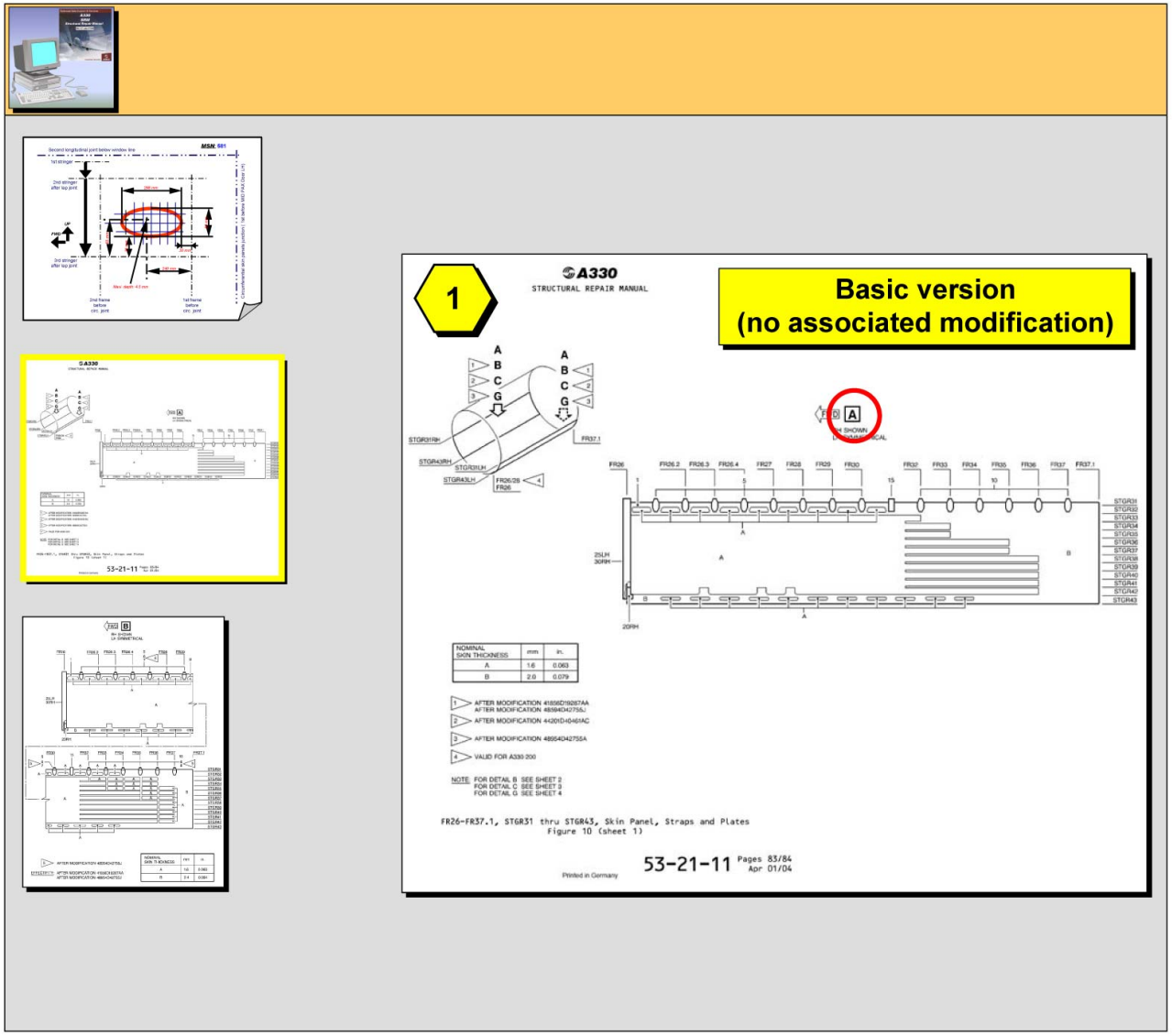

STRUCTURE IDENTIFICATION - CONT'D

DAMAGE ASSESSMENT EXAMPLE 1 D/O (3)

structure identification (continued)

CONT'D

The other panel version can be installed onto the A/C after the embodiment of modifications 41856D19287AA or 48954D42755J.

G7508471 - G3NT1T0 - FM51DG000000001

Damage Identification

Damage Geographical Location / Measurement

Detailed Location

Structure Identification

Allowable Damage Information

Allowable Damage Usage

Structural Repair Manual

- Front Pages
- Introduction
- Alphanumeric Index
- Chapter SRI
- Chapter 51
- Chapter 52
- **Chapter 53**
  - Table of Contents
  - 53-0...
  - 53-1...
  - **53-2...**
    - 53-20-00 – 001
    - 53-21-00 – 001
    - **53-21-11 – 001**
    - 53-21-11 – 101
    - 53-21-11 – 201
    - 53-21-12 – 001
    - 53-21-12 – 101
    - 53-21-12 – 201
    - 53-21-13 – 001
    - 53-2 -...
- Chapter 54
- Chapter 55

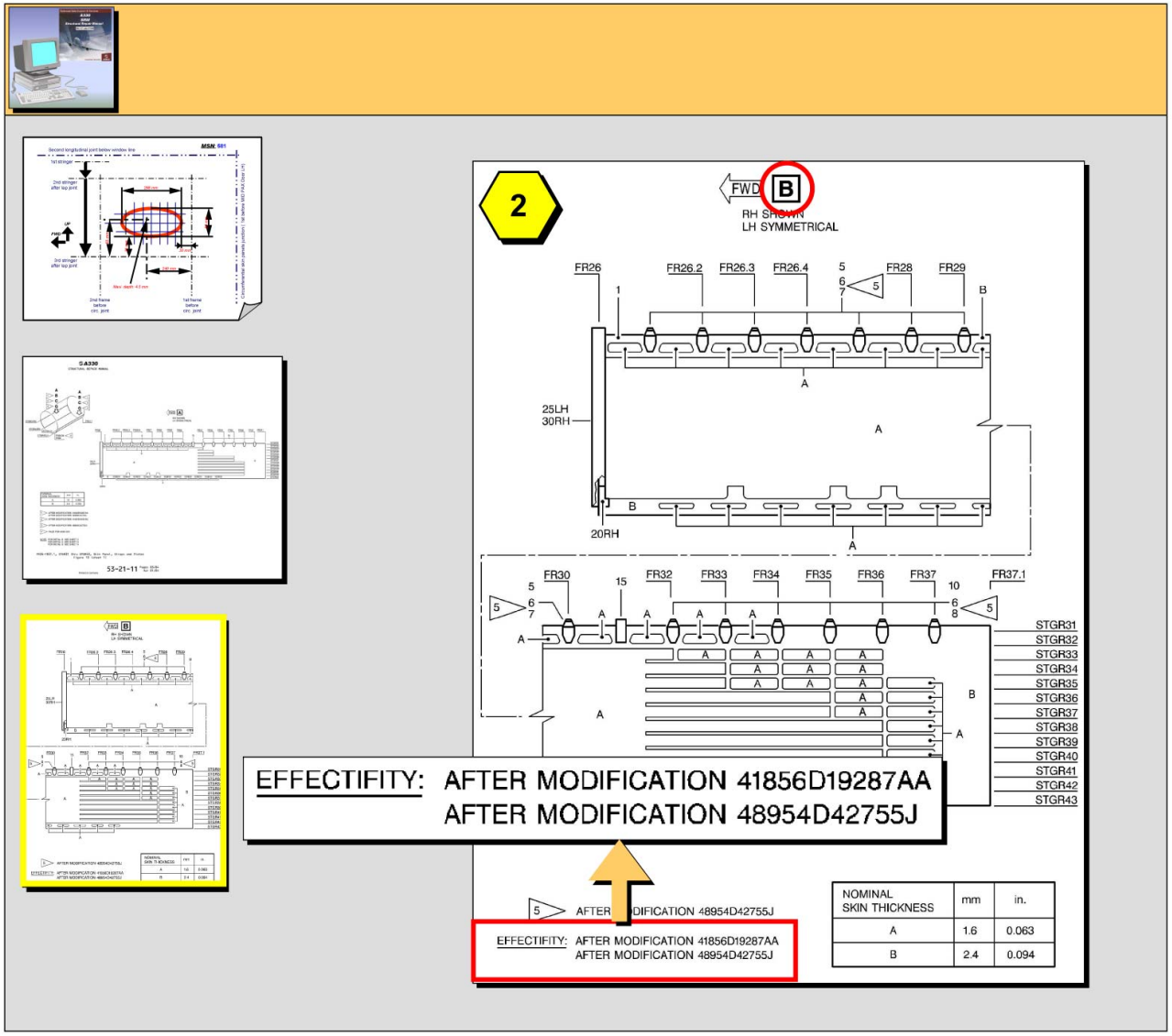

STRUCTURE IDENTIFICATION - CONT'D

DAMAGE ASSESSMENT EXAMPLE 1 D/O (3)

structure identification (continued)

CONT'D

To identify the actual panel, the modification numbers have to be compared with the service bulletin/modification list located at the beginning of chapter 53-20-00.

G7508471 - G3NT1T0 - FM51DG000000001

- Damage Identification
- Damage Geographical Location / Measurement
- Detailed Location
- **Structure Identification**
- Allowable Damage Information
- Allowable Damage Usage

Structural Repair Manual

- Front Pages
- Introduction
- Alphanumeric Index
- Chapter SRI
- Chapter 51
- Chapter 52
- **Chapter 53**
  - Table of Contents
  - 53-0...
  - 53-1...
  - **53-2...**
    - **53-20-00 – 001**
    - 53-21-00 – 001
    - **53-21-11 – 001**
    - 53-21-11 – 101
    - 53-21-11 – 201
    - 53-21-12 – 001
    - 53-21-12 – 101
    - 53-21-12 – 201
    - 53-21-13 – 001
    - 53-2 -...
- Chapter 54
- Chapter 55

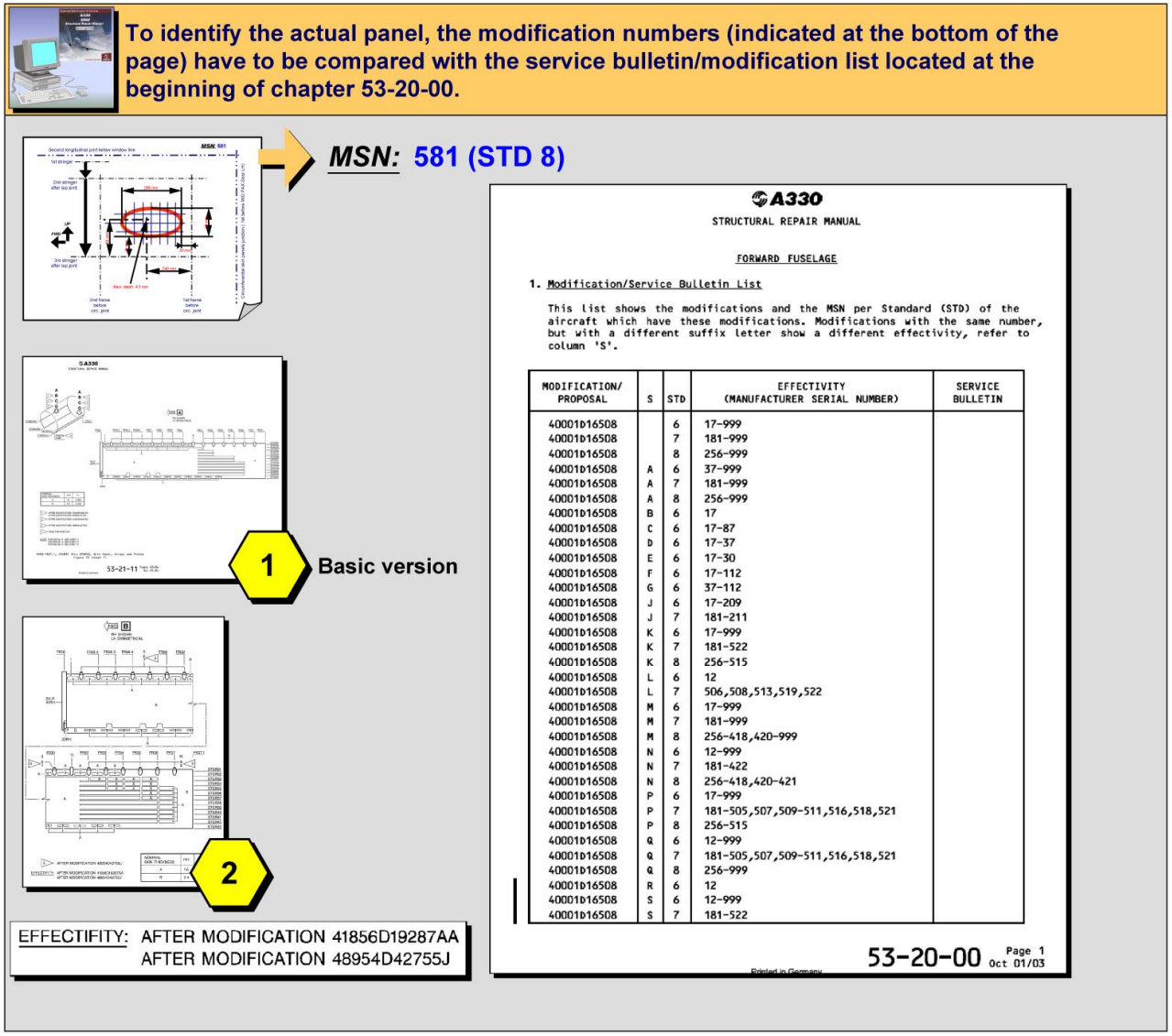

MODIFICATION/ PROPOSAL	S	STD	EFFECTIVITY (MANUFACTURER SERIAL NUMBER)	SERVICE BULLETIN
40001D16508		6	17-999	
40001D16508		7	181-999	
40001D16508		8	256-999	
40001D16508	A	6	37-999	
40001D16508	A	7	181-999	
40001D16508	A	8	256-999	
40001D16508	B	6	17	
40001D16508	C	6	17-87	
40001D16508	D	6	17-37	
40001D16508	E	6	17-30	
40001D16508	F	6	17-112	
40001D16508	G	6	37-112	
40001D16508	J	6	17-209	
40001D16508	J	7	181-211	
40001D16508	K	6	17-999	
40001D16508	K	7	181-522	
40001D16508	K	8	256-515	
40001D16508	L	6	12	
40001D16508	L	7	506,508,513,519,522	
40001D16508	M	6	17-999	
40001D16508	M	7	181-999	
40001D16508	M	8	256-418,420-999	
40001D16508	N	6	12-999	
40001D16508	N	7	181-422	
40001D16508	N	8	256-418,420-421	
40001D16508	P	6	17-999	
40001D16508	P	7	181-505,507,509-511,516,518,521	
40001D16508	P	8	256-515	
40001D16508	Q	6	12-999	
40001D16508	Q	7	181-505,507,509-511,516,518,521	
40001D16508	Q	8	256-999	
40001D16508	R	6	12	
40001D16508	S	6	12-999	
40001D16508	S	7	181-522	

STRUCTURE IDENTIFICATION - CONT'D

G7508471 - G3NT1T0 - FM51DG000000001

DAMAGE ASSESSMENT EXAMPLE 1 D/O (3)

structure identification (continued)

CONT'D

The MSN 581 we are dealing with is a standard 8. The first modification (41856D19287AA) does not apply since effective only for Standard 6,
The second modification (48954D42755J) applies only for MSN 524 up to MSN 549. Our aircraft is also not affected by this modification.
Consequently the basic panel (view A) is the panel installed on MSN 581.
The next step will be to determine the nominal panel thickness is the affected area.

G7508471 - G3NT1T0 - FM51DG000000001

- Damage Identification
- Damage Geographical Location / Measurement
- Detailed Location
- **Structure Identification**
- Allowable Damage Information
- Allowable Damage Usage

Structural Repair Manual

- Front Pages
- Introduction
- Alphanumeric Index
- Chapter SRI
- Chapter 51
- Chapter 52
- **Chapter 53**
  - Table of Contents
  - 53-0...
  - 53-1...
  - **53-2...**
    - 53-20-00 – 001
    - 53-21-00 – 001
    - **53-21-11 – 001**
    - 53-21-11 – 101
    - 53-21-11 – 201
    - 53-21-12 – 001
    - 53-21-12 – 101
    - 53-21-12 – 201
    - 53-21-13 – 001
    - 53-2 -...
- Chapter 54
- Chapter 55

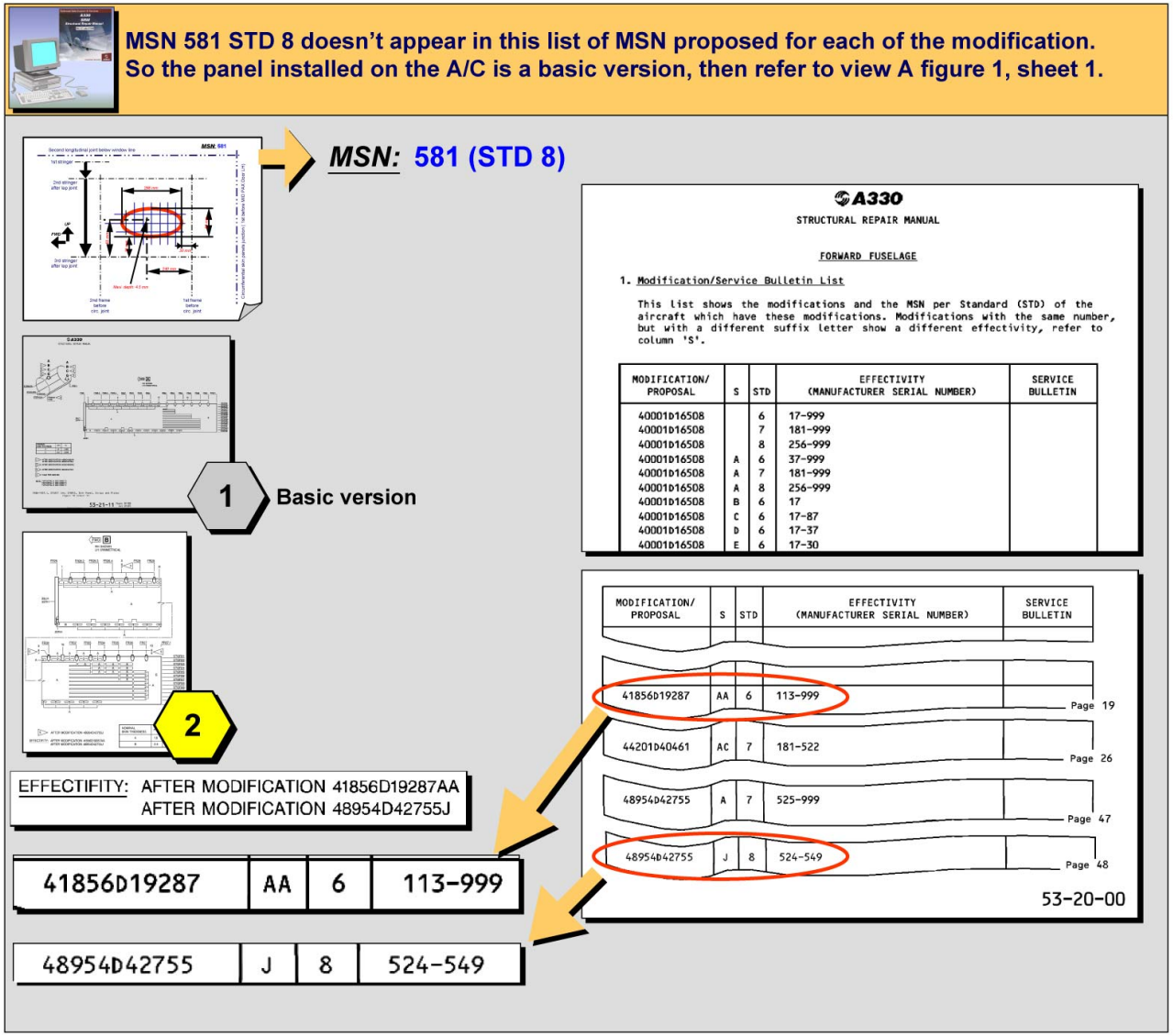

STRUCTURE IDENTIFICATION - CONT'D

DAMAGE ASSESSMENT EXAMPLE 1 D/O (3)

structure identification (continued)

CONT'D

The damage is located between FR 36 and 37, and is located between the second and the third stringer from STGR 31 (longitudinal skin joint reference). This information can be reported onto the illustration (view A) and gives the nominal skin thickness in the damaged area (refer to the thickness code table).

G7508471 - G3NT1T0 - FM51DG000000001

- Damage Identification
- Damage Geographical Location / Measurement
- Detailed Location
- **Structure Identification**
- Allowable Damage Information
- Allowable Damage Usage

Structural Repair Manual

- Front Pages
- Introduction
- Alphanumeric Index
- Chapter SRI
- Chapter 51
- Chapter 52
- **Chapter 53**
  - Table of Contents
  - 53-0...
  - 53-1...
  - **53-2...**
    - 53-20-00 – 001
    - 53-21-00 – 001
    - **53-21-11 – 001**
    - 53-21-11 – 101
    - 53-21-11 – 201
    - 53-21-12 – 001
    - 53-21-12 – 101
    - 53-21-12 – 201
    - 53-21-13 – 001
    - 53-2 -...
- Chapter 54
- Chapter 55

The skin panel thickness at damage location can be determined; for this purpose, we shall refer to the thickness code table.

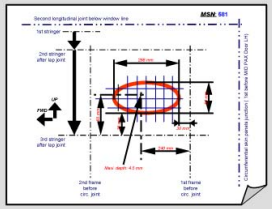

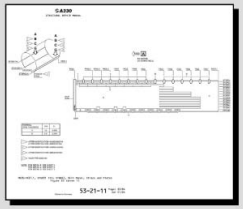

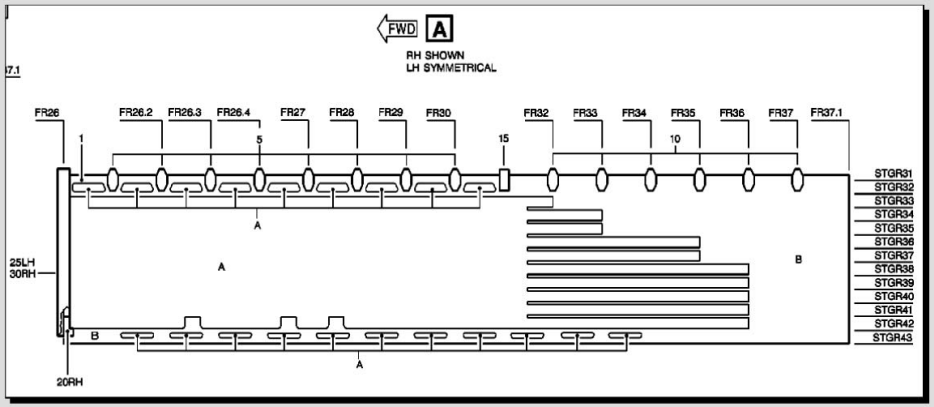

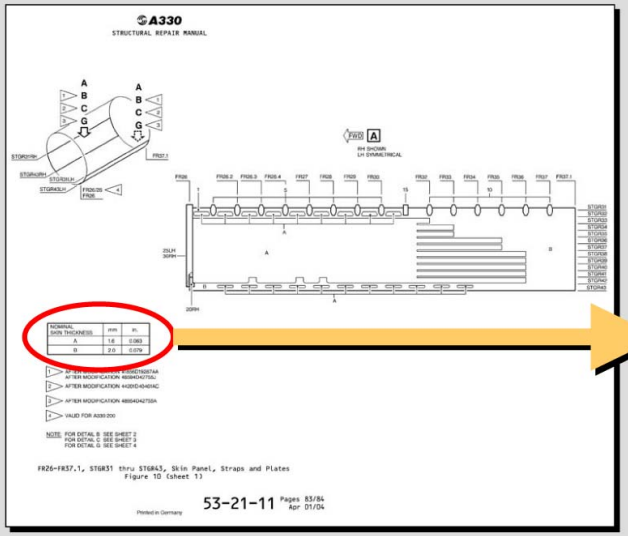

NOMINAL SKIN THICKNESS	mm	in.
A	1.6	0.063
B	2.0	0.079

STRUCTURE IDENTIFICATION - CONT'D

DAMAGE ASSESSMENT EXAMPLE 1 D/O (3)

structure identification (continued)

CONT'D

The damage is located between FR 36 and 37, and is located between the second and the third stringer from STGR 31 (longitudinal skin joint reference).
This information can be reported onto the illustration and gives:
- the nominal skin thickness in the damaged area (code B, giving 2.0 mm (0.079 in)),
- the stringer location: damage located between STGR 33LH and 34LH.

G7508471 - G3NT1T0 - FM51DG000000001

- Damage Identification
- Damage Geographical Location / Measurement
- Detailed Location
- **Structure Identification**
- Allowable Damage Information
- Allowable Damage Usage

Structural Repair Manual

- Front Pages
- Introduction
- Alphanumeric Index
- Chapter SRI
- Chapter 51
- Chapter 52
- **Chapter 53**
  - Table of Contents
  - 53-0...
  - 53-1...
  - **53-2...**
    - 53-20-00 – 001
    - 53-21-00 – 001
    - **53-21-11 – 001**
    - 53-21-11 – 101
    - 53-21-11 – 201
    - 53-21-12 – 001
    - 53-21-12 – 101
    - 53-21-12 – 201
    - 53-21-13 – 001
    - 53-2 -...
- Chapter 54
- Chapter 55

The damage is located between the second and the third stringer from STGR 31 (longitudinal skin joint reference). This information can be reported onto the illustration and gives the nominal skin thickness in the damaged area, and the stringer location.

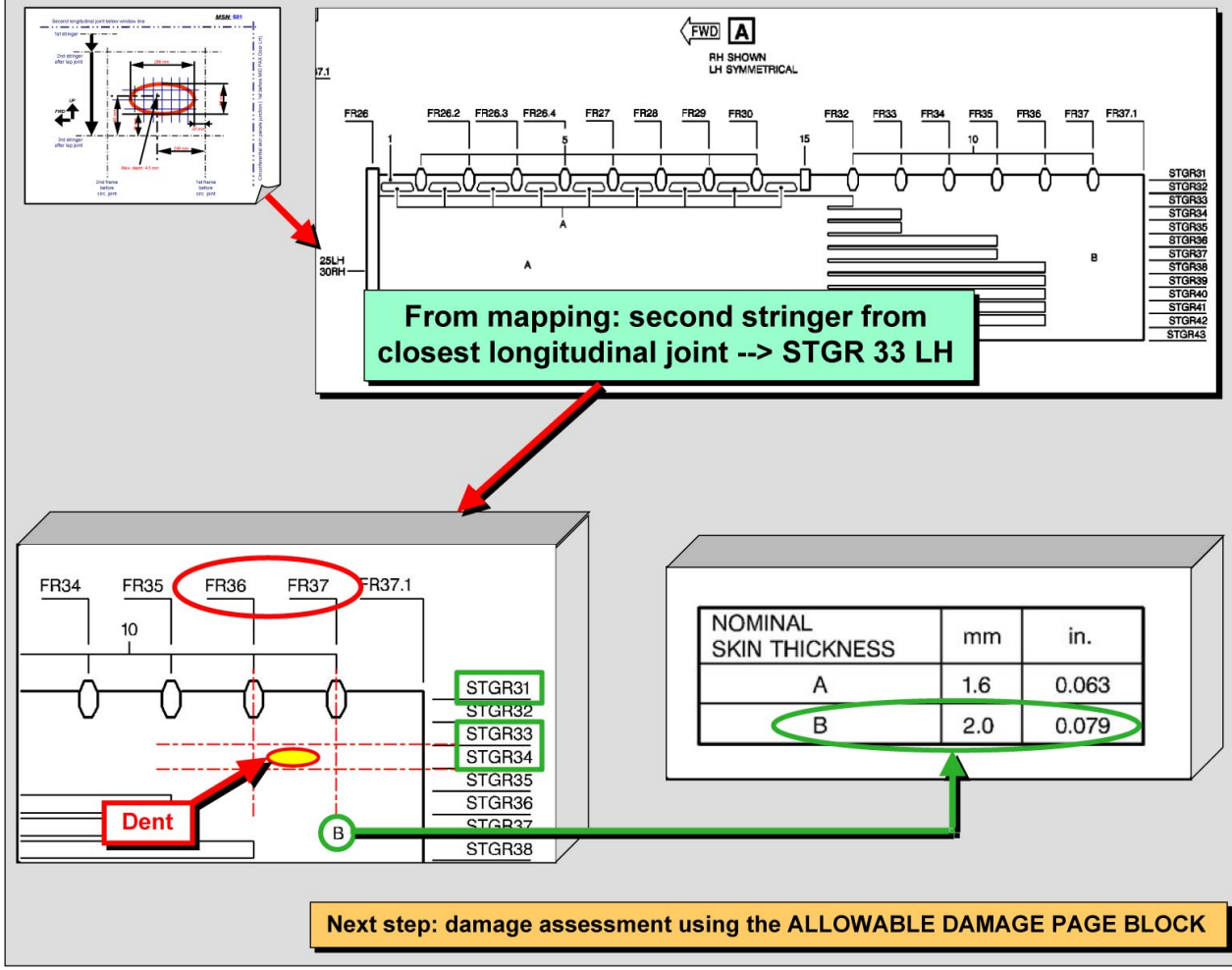

Next step: damage assessment using the ALLOWABLE DAMAGE PAGE BLOCK

STRUCTURE IDENTIFICATION - CONT'D

DAMAGE ASSESSMENT EXAMPLE 1 D/O (3)

ALLOWABLE DAMAGE INFORMATION

GENERAL

The damaged structure has been identified and located, we can now start the allowable damage selection and reading.

G7508471 - G3NT1T0 - FM51DG000000001

- Damage Identification
- Damage Geographical Location / Measurement
- Detailed Location
- Structure Identification
- **Allowable Damage Information**
- Allowable Damage Usage

Objective:
The damaged structure has been identified and located; we can now start the allowable damage selection and reading procedure.

MSN: 581 (STD 8)

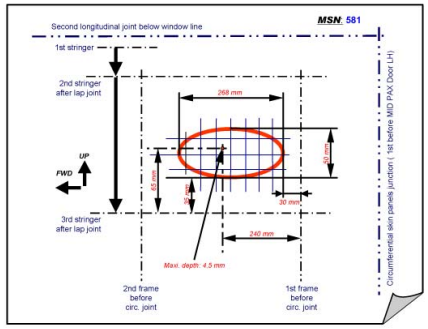

Damage Preliminary Recording
- Geographical location
- Dimensions / Measurements

SRM

Detailed location/ recording

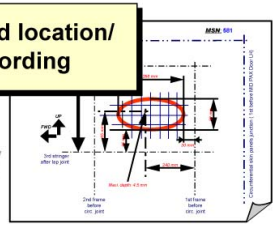

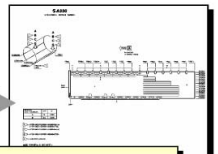

Full identification of the damaged structure

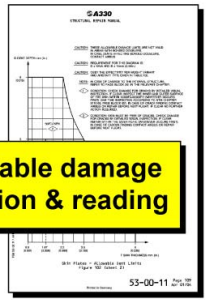

Allowable damage selection & reading

ALLOWABLE DAMAGE INFORMATION - GENERAL

G7508471 - G3NT1T0 - FM51DG000000001

DAMAGE ASSESSMENT EXAMPLE 1 D/O (3)

ALLOWABLE DAMAGE INFORMATION (continued)

CONT'D

To start, refer to the page block 101 of the relevant chapter/section (53-21-11), and start to read carefully the procedure. In the considered example, there is no specific allowable damage for this skin section, chapter 53-00-11 page block 101 must be used to determine if the damage is allowable or not.

G7508471 - G3NT1T0 - FM51DG000000001

Damage Identification

Damage Geographical Location / Measurement

Detailed Location

Structure Identification

Allowable Damage Information

Allowable Damage Usage

Structural Repair Manual

- Front Pages
- Introduction
- Alphanumeric Index
- Chapter SRI
- Chapter 51
- Chapter 52
- **Chapter 53**
  - Table of Contents
  - 53-0...
  - 53-1...
  - **53-2...**
    - 53-20-00 – 001
    - 53-21-00 – 001
    - 53-21-11 – 001
    - **53-21-11 – 101**
    - 53-21-11 – 201
    - 53-21-12 – 001
    - 53-21-12 – 101
    - 53-21-12 – 201
    - 53-21-13 – 001
    - 53-2 -...
- Chapter 54
- Chapter 55

To start the damage assessment, refer to the page block 101 of the relevant chapter/section (53-21-11), and start to read carefully the procedure. In the considered example, there is no specific allowable damage for this skin section.

A330
STRUCTURAL REPAIR MANUAL

SKIN PLATES

1. General

CAUTION: HIDDEN DAMAGE CAN LEAD TO A FAILURE OF THE REPAIR SURROUNDING STRUCTURE.

A. This topic contains allowable damage data for the skin plates between FR18 thru FR38.

NOTE: For definition of allowable damage, refer to Chapter 51-11-11.

NOTE: For Damage/Repair Data Recording, refer to Chapter 51-11-15.

NOTE: For repair of Minor Damage, refer to Chapter 51-73-00.

NOTE: For repair of Corroded Areas, refer to Chapter 51-74-00.

2. Allowable Damage

- For Skin Plates
  Compare the damage in question with Table 101 - damage Criteria, given in Chapter 53-00-11 Page Block 101 - SKIN PLATES.

53-21-11 Page 101 Apr 01/04

Printed in Germany

2. Allowable Damage

- For Skin Plates
  Compare the damage in question with Table 101 - damage Criteria, given in Chapter 53-00-11 Page Block 101 - SKIN PLATES.

No specific allowable damage for this section. Use general allowable damage for skin panels in 53-00-11 section.

ALLOWABLE DAMAGE INFORMATION - CONT'D

DAMAGE ASSESSMENT EXAMPLE 1 D/O (3)

ALLOWABLE DAMAGE INFORMATION (continued)

CONT'D

A special attention shall be paid to the notes and cautions.

G7508471 - G3NT1T0 - FM51DG000000001

- Damage Identification
- Damage Geographical Location / Measurement
- Detailed Location
- Structure Identification
- **Allowable Damage Information**
- Allowable Damage Usage

Structural Repair Manual

- Front Pages
- Introduction
- Alphanumeric Index
- Chapter SRI
- Chapter 51
- Chapter 52
- **Chapter 53**
  - Table of Contents
  - **53-0...**
    - 53-00-00 – 001
    - **53-00-11 – 101**
    - 53-00-11 – 201
    - 53-00-12 – 101
    - 53-00-12 – 201
    - 53-00-13 – 101
    - 53-00-13 – 201
    - 53-00-14 – 101
    - 53-00-14 – 201
    - 53-0...
  - 53-1...
  - 53-2...
- Chapter 54
- Chapter 55

A special attention shall be paid to the notes and cautions.

Careful Reading

Pay a particular attention to the caution notes within allowable damage paragraph.

A330
STRUCTURAL REPAIR MANUAL

SKIN PLATES

CAUTION: OBEY THE REPAIR APPLICABILITY PER MODIFICATION GIVEN IN THE RELEVANT REPAIR.

CAUTION: OBEY THE ALLOWABLE DAMAGE EFFECTIVITY PER WEIGHT VARIANT AND AIRCRAFT TYPE GIVEN IN THE RELEVANT PARAGRAPH.

1. General

CAUTION: HIDDEN DAMAGE CAN LEAD TO A FAILURE OF THE REPAIR OR SURROUNDING STRUCTURE.

CAUTION: DAMAGE IN AREAS AROUND STATIC PORTS, PITOT PROBES, TOTAL AIR TEMPERATURE PROBES AND ANGLE OF ATTACK SENSORS, HAVE TO COMPLY WITH THE STRUCTURAL ALLOWABLE LIMITS GIVEN IN THIS CHAPTER AND THE AERODYNAMIC SMOOTHNESS REQUIREMENTS GIVEN IN PARAGRAPH 4..

CAUTION: THE REWORKED AREA MUST BE CHECKED TO ENSURE THAT THE ALLOWABLE DAMAGE LIMITS HAVE NOT BEEN EXCEEDED. WHEN THE LIMITS ARE EXCEEDED A REPAIR IS NECESSARY.

A. This topic contains allowable damage data for the skin plates. Allowable damage is damage for which an immediate structural repair is not necessary. You must blend out the allowable damage and protect the surface on the component.

NOTE: For definition of allowable damage refer to Chapter 51-11-11

NOTE: For Damage/Repair Data Recording refer to Chapter 51-11-15.

NOTE: For repair of MINOR DAMAGE refer to Chapter 51-73-00.

NOTE: For repair of CORRODED AREAS refer to Chapter 51-74-00.

2. Allowable Damage

A. Refer to Paragraph 3. - Damage Criteria - to find the limits of allowable damage. These include data for the skin plates.

B. The column 'Action or Repair' in the relevant identification page block gives references for the available repairs. These are necessary if the allowable damage limits are more than shown.

Printed in Germany

53-00-11 Page 101 Apr 01/04

ALLOWABLE DAMAGE INFORMATION - CONT'D

G7508471 - G3NT1T0 - FM51DG000000001

DAMAGE ASSESSMENT EXAMPLE 1 D/O (3)

ALLOWABLE DAMAGE INFORMATION (continued)

CONT'D

To keep on with the damage assessment procedure, the allowable damage paragraph refers to the damage criteria table 101 (paragraph 3). In this table, the paragraph 3C has to be considered for dents.

G7508471 - G3NT1T0 - FM51DG000000001

- Damage Identification
- Damage Geographical Location / Measurement
- Detailed Location
- Structure Identification
- **Allowable Damage Information**
- Allowable Damage Usage

Structural Repair Manual

- Front Pages
- Introduction
- Alphanumeric Index
- Chapter SRI
- Chapter 51
- Chapter 52
- **Chapter 53**
  - Table of Contents
  - **53-0...**
    - 53-00-00 – 001
    - **53-00-11 – 101**
    - 53-00-11 – 201
    - 53-00-12 – 101
    - 53-00-12 – 201
    - 53-00-13 – 101
    - 53-00-13 – 201
    - 53-00-14 – 101
    - 53-00-14 – 201
    - 53-0...
  - 53-1...
  - 53-2...
- Chapter 54
- Chapter 55

Refer to paragraph 3 - damage criteria - to find the limits of allowable damage.
For dents the relevant paragraph is Paragraph 3.C.

3. Damage Criteria

NOMENCLATURE	TYPE OF DAMAGE / DESCRIPTION	PARAGRAPH
Skin Plates	Rework	3.A.
	Dents	3.C.
	Dent Dress-Out	3.D.
Upper Skin Plates	Rework of Longitudinal Lap Joint Runout	3.B.

Table 101

CAUTION: DAMAGE IN AREAS AROUND STATIC PORTS, PITOT PROBES, TOTAL AIR TEMPERATURE PROBES AND AN OF ATTACK SENSORS, HAVE TO COMPLY WITH THE STRUCTURAL ALLOWAB LIMITS GIVEN IN THIS CHAPTER AND THE AERODYNAMIC SMOOTHNESS QUIREMENTS GIVEN IN PARAGRAPH 4..

CAUTION: THIS REPAIR INFORMAT APPLICABLE AS FOLLOWS:

- BEFORE MODIFICATION 327D42881

NOMENCLATURE	TYPE OF DAMAGE / DESCRIPTION	PARAGRAPH
Skin Plates	Rework	3.A.
	Dents	3.C.
	Dent Dress-Out	3.D.
Upper Skin Plates	Rework of Longitudinal Lap Joint Runout	3.B.

Table 101

Printed in Germany

53-00-11 Page 102 Apr 01/04

ALLOWABLE DAMAGE INFORMATION - CONT'D

DAMAGE ASSESSMENT EXAMPLE 1 D/O (3)

ALLOWABLE DAMAGE INFORMATION (continued)

CONT'D

As mentioned in a caution at the beginning of the allowable damage pages, the allowable damage applicability have to be checked, using the weight variant table (table 102) given at the beginning of the paragraph. The actual weight variant information should come from the engineering or maintenance control.

G7508471 - G3NT1T0 - FM51DG000000001

- Damage Identification
- Damage Geographical Location / Measurement
- Detailed Location
- Structure Identification
- **Allowable Damage Information**
- Allowable Damage Usage

Structural Repair Manual

- Front Pages
- Introduction
- Alphanumeric Index
- Chapter SRI
- Chapter 51
- Chapter 52
- **Chapter 53**
  - Table of Contents
  - **53-0...**
    - 53-00-00 – 001
    - **53-00-11 – 101**
    - 53-00-11 – 201
    - 53-00-12 – 101
    - 53-00-12 – 201
    - 53-00-13 – 101
    - 53-00-13 – 201
    - 53-00-14 – 101
    - 53-00-14 – 201
    - 53-0...
  - 53-1...
  - 53-2...
- Chapter 54
- Chapter 55

The allowable damage applicability has to be checked, using the effectivity per weight variant table (table 102).

CAUTION: OBEY THE ALLOWABLE DAMAGE EFFECTIVITY PER WEIGHT VARIANT AND AIRCRAFT TYPE GIVEN IN TABLE 102.

CAUTION: THE ALLOWABLE DAMAGE LIMITS GIVEN IN FIGURE 102, SHEET 2 AND 3 ARE NOT APPLICABLE IN AREAS WITH BONDED DOUBLERS. IN CASE OF DENTS AFFECTING BONDED DOUBLERS, CONTACT AIRBUS.

CAUTION: DAMAGE IN AREAS AROUND STATIC PORTS, PITOT PROBES, TOTAL AIR TEMPERATURE PROBES AND ANGLE OF ATTACK SENSORS, HAVE TO COMPLY WITH THE STRUCTURAL ALLOWABLE LIMITS GIVEN IN THIS CHAPTER AND THE AERODYNAMIC SMOOTHNESS REQUIREMENTS GIVEN IN PARAGRAPH 4..

C. Skin Plates - Allowable Dent Limits

AIRCRAFT	WEIGHT VARIANT
A330-2XX	020, 021, 022 <1>
A330-3XX	000, 001, 002, 003, 004, 010, 012, 020, 022 <2>

Effectivity per Weight Variant and Aircraft Type

Table 102

53-00-11 Page 106 Apr 01/04

Printed in Germany

The Weight Variant (WV) to be considered for allowable damage may be different from the WV at A/C delivery or the today's WV due to application of Service Bulletins.

This information should come from Engineering or Maintenance control.

ALLOWABLE DAMAGE INFORMATION - CONT'D

DAMAGE ASSESSMENT EXAMPLE 1 D/O (3)

ALLOWABLE DAMAGE INFORMATION (continued)

CONT'D

The information coming from engineering shows that MSN 581 is at weight variant 020. Checking table 102, weight variant 020 is included in and thus the following allowable damage information is applicable.

G7508471 - G3NT1T0 - FM51DG000000001

- Damage Identification
- Damage Geographical Location / Measurement
- Detailed Location
- Structure Identification
- **Allowable Damage Information**
- Allowable Damage Usage

Structural Repair Manual

- Front Pages
- Introduction
- Alphanumeric Index
- Chapter SRI
- Chapter 51
- Chapter 52
- **Chapter 53**
  - Table of Contents
  - **53-0...**
    - 53-00-00 – 001
    - **53-00-11 – 101**
    - 53-00-11 – 201
    - 53-00-12 – 101
    - 53-00-12 – 201
    - 53-00-13 – 101
    - 53-00-13 – 201
    - 53-00-14 – 101
    - 53-00-14 – 201
    - 53-0...
  - 53-1...
  - 53-2...
- Chapter 54
- Chapter 55

Weight Variant 020 is included in the table, thus, the following allowable damage information can be used.

CAUTION: OBEY THE ALLOWABLE DAMAGE EFFECTIVITY PER WEIGHT VARIANT AND AIRCRAFT TYPE GIVEN IN TABLE 102.

CAUTION: THE ALLOWABLE DAMAGE LIMITS GIVEN IN FIGURE 102, SHEET 2 AND 3 ARE NOT APPLICABLE IN AREAS WITH BONDED DOUBLERS. IN CASE OF DENTS AFFECTING BONDED DOUBLERS, CONTACT AIRBUS.

CAUTION: DAMAGE IN AREAS AROUND STATIC PORTS, PITOT PROBES, TOTAL AIR TEMPERATURE PROBES AND ANGLE OF ATTACK SENSORS, HAVE TO COMPLY WITH THE STRUCTURAL ALLOWABLE LIMITS GIVEN IN THIS CHAPTER AND THE AERODYNAMIC SMOOTHNESS REQUIREMENTS GIVEN IN PARAGRAPH 4..

C. Skin Plates - Allowable Dent Limits

NOTE: This allowable damage information is applicable for dents to the skin plates in the areas between FR18 thru FR38 and FR53.3 thru FR80/82 and is valid as shown in Table 102.

AIRCRAFT	WEIGHT VARIANT
A330-2XX	020, 021, 022 <1>
A330-3XX	000, 001, 002, 003, 004, 010, 012, 020, 022 <2>

Effectivity per Weight Variant and Aircraft Type

Table 102

<1> Refer to Figu
turbed skin

Refer to F
turbed ski
maining ar

<2> Refer to F
turbed ski
rounding p

Refer to F
turbed ski
maining ar

NOTE: Refer to
the SRM,
and their
type.

NOTE: This allo
areas:

- FR1 thru FR18. Refer to Chapter 53-11-11 Page Block 101 to find the allowable dent limits applicable in this area.

Printed in Germany

53-00-11 Page 106 Apr 01/04

AIRCRAFT	WEIGHT VARIANT
A330-2XX	020, 021, 022 <1>
A330-3XX	000, 001, 002, 003, 004, 010, 012, 020, [illegible]

Effectivity per Weight Variant and Aircraft Type

Table 102

For the EXAMPLE:
MSN 581 = WV 020

ALLOWABLE DAMAGE INFORMATION VALID FOR MSN 581

ALLOWABLE DAMAGE INFORMATION - CONT'D

DAMAGE ASSESSMENT EXAMPLE 1 D/O (3)

ALLOWABLE DAMAGE INFORMATION (continued)

CONT'D

The second caution at the beginning of the allowable damage pages deals with bonded doublers; if the dent affects bonded doublers (see next page), the operator has to contact Airbus. The third caution at the beginning of the allowable damage pages deals with damage located in special areas (ports, probes, sensors, etc...), located at the nose forward fuselage. The damage being located FR 36 and 37 (aft of ports, probes and sensors), this last limitation does apply.

G7508471 - G3NT1T0 - FM51DG000000001

- Damage Identification
- Damage Geographical Location / Measurement
- Detailed Location
- Structure Identification
- **Allowable Damage Information**
- Allowable Damage Usage

Structural Repair Manual

- Front Pages
- Introduction
- Alphanumeric Index
- Chapter SRI
- Chapter 51
- Chapter 52
- **Chapter 53**
  - Table of Contents
  - **53-0...**
    - 53-00-00 – 001
    - **53-00-11 – 101**
    - 53-00-11 – 201
    - 53-00-12 – 101
    - 53-00-12 – 201
    - 53-00-13 – 101
    - 53-00-13 – 201
    - 53-00-14 – 101
    - 53-00-14 – 201
    - 53-0...
  - 53-1...
  - 53-2...
- Chapter 54
- Chapter 55

The nomenclature associated to the relevant SRM figure shows that there is no bonded doubler in the damage area: these cautions are not applicable.

CAUTION: OBEY THE ALLOWABLE DAMAGE EFFECTIVITY PER WEIGHT VARIANT AND AIRCRAFT TYPE GIVEN IN TABLE 102.

CAUTION: OBEY THE ALLOWABLE DAMAGE EFFECTIVITY PER WEIGHT VARIANT AND AIRCRAFT TYPE GIVEN IN TABLE 102.

CAUTION: THE ALLOWABLE DAMAGE LIMITS GIVEN IN FIGURE 102, SHEET 2 AND 3 ARE NOT APPLICABLE IN AREAS WITH BONDED DOUBLERS. IN CASE OF DENTS AFFECTING BONDED DOUBLERS, CONTACT AIRBUS.

CAUTION: DAMAGE IN AREAS AROUND STATIC PORTS, PITOT PROBES, TOTAL AIR TEMPERATURE PROBES AND ANGLE OF ATTACK SENSORS, HAVE TO COMPLY WITH THE STRUCTURAL ALLOWABLE LIMITS GIVEN IN THIS CHAPTER AND THE AERODYNAMIC SMOOTHNESS REQUIREMENTS GIVEN IN PARAGRAPH 4..

Table 102

FWD A
RH SHOWN

FR26 FR26.2 FR26.3 FR26.4 FR27 FR28 FR29 FR30 FR32 FR33 FR34 FR35 FR36 FR37 FR37.1

STGR31 STGR32 STGR33 STGR34 STGR35 STGR36 STGR37 STGR38 STGR39 STGR40 STGR41 STGR42 STGR43

25LH 30RH 20RH

53-00-11 Page 106 Apr 01/04

Printed in Germany

ITEM	NOMENCLATURE	SPECIFICAT AND/OR SECTION C
1	Panel, skin	T351 ABS5043A02
1A	Panel, skin	T351 ABS5043A02
1B	Panel, skin	T351 ABS5043A02
1C	Panel, skin	T351 ABS5043A02
1D	Panel, skin	T351 ABS5043A02
1E	Panel, skin	T351 ABS5043A02
5	Strap, assy	
5A	Strap	3.7164.1 LN9297H10
6	Strap	3.7164.1 LN9297H10
7	Key	3.1354T35 DAN26-6
8	Key	3.1354T35 DAN26-6
10	Strap, assy	
15	Buttstrap, cross	T351 ABS5044A02

Key to Figure 10

53-21-11 Pag Apr

SEE NEXT SLIDE

ALLOWABLE DAMAGE INFORMATION - CONT'D

DAMAGE ASSESSMENT EXAMPLE 1 D/O (3)

ALLOWABLE DAMAGE INFORMATION (continued)

CONT'D

The skin thickness in damaged area is 2.0 mm (0.079 in) then, the operator shall refer to figure 102 sheet 2 for allowable damage information. Read carefully the note; some limitations concerning the areas where allowable damage information is not applicable may be indicated in this section.

G7508471 - G3NT1T0 - FM51DG000000001

Damage Identification

Damage Geographical Location / Measurement

Detailed Location

Structure Identification

Allowable Damage Information

Allowable Damage Usage

Structural Repair Manual

- Front Pages
- Introduction
- Alphanumeric Index
- Chapter SRI
- Chapter 51
- Chapter 52
- **Chapter 53**
  - Table of Contents
  - **53-0...**
    - 53-00-00 – 001
    - **53-00-11 – 101**
    - 53-00-11 – 201
    - 53-00-12 – 101
    - 53-00-12 – 201
    - 53-00-13 – 101
    - 53-00-13 – 201
    - 53-00-14 – 101
    - 53-00-14 – 201
    - 53-0...
  - 53-1...
  - 53-2...
- Chapter 54
- Chapter 55

For A330-3XX A/C, refer to Note <2>.
Then refer to figure 102 sheet 2.

CAUTION: OBEY THE ALLOWABLE DAMAGE EFFECTIVITY PER WEIGHT VARIANT AND AIRCRAFT TYPE GIVEN IN TABLE 102.

AIRCRAFT	WEIGHT VARIANT
A330-2XX	020, 021, 022 <1>
A330-3XX	000, 001, 002, 003, 004, 010, 012, 020, 022 <2>

Effectivity per Weight Variant and Aircraft Type

Table 102

Table 102

<1> Refer to Figure 102 sheet 3 for allowable damage information on undisturbed skin with skin thickness T = 1.6 mm (0.063 in.)

<2> Refer to Figure 102 sheet 3 for allowable damage information on undisturbed skin with skin thickness T = 1.6 mm (0.063 in.) and Door surrounding panels between FR31 thru FR37.1 and STGR9 thru STGR31 LH/RH.

Refer to Figure 102 sheet 2 for allowable damage information on undisturbed skin with skin thickness T > 1.6 mm (0.063 in.) and for the remaining areas (other door surrounding panels).

NOTE: This allowable damage information is not applicable in the following areas:

NOTE: This allowable damage information is not applicable in the following areas:

- FR1 thru FR18. Refer to Chapter 53-11-11 Page Block 101 to find the allowable dent limits applicable in this area.

ALLOWABLE DAMAGE INFORMATION - CONT'D

DAMAGE ASSESSMENT EXAMPLE 1 D/O (3)

ALLOWABLE DAMAGE INFORMATION (continued)

CONT'D

This procedure (see figure 102, sheet 1) enables the operator to measure the dent parameters from inside or from outside.

G7508471 - G3NT1T0 - FM51DG000000001

Damage Identification
Damage Geographical Location / Measurement
Detailed Location
Structure Identification
Allowable Damage Information
Allowable Damage Usage

Structural Repair Manual

- Front Pages
- Introduction
- Alphanumeric Index
- Chapter SRI
- Chapter 51
- Chapter 52
- Chapter 53
  - Table of Contents
  - 53-0...
    - 53-00-00 – 001
    - 53-00-11 – 101
    - 53-00-11 – 201
    - 53-00-12 – 101
    - 53-00-12 – 201
    - 53-00-13 – 101
    - 53-00-13 – 201
    - 53-00-14 – 101
    - 53-00-14 – 201
    - 53-0...
  - 53-1...
  - 53-2...
- Chapter 54
- Chapter 55

This procedure (figure 102, sheet 1) enables the operator to measure the dent parameters from inside or from outside.

A330
STRUCTURAL REPAIR MANUAL

MEASURED FROM INSIDE
PROCEDURE A

MEASURED FROM OUTSIDE
PROCEDURE B

CAUTION: OBEY THE EFFECTIVITY PER WEIGHT VARIANT AND AIRCRAFT TYPE GIVEN IN TABLE 102.

NOTE: T: IS THE SKIN THICKNESS IN DENTED AREA. IF DENT AFFECTS SEVERAL TH EACH OF THEM HAS TO BE CONSIDERED AND THE WORST LIMITATION HAS T APPLIED.

D: IS THE MAXIMUM DEPTH OF THE SKIN DENT.

A: IS THE DISTANCE FROM THE LOCATION OF THE MAXIMUM DEPTH OF THE DE TO THE EDGE OF ADJACENT STIFFENING MEMBER, SEE PROCEDURE A. WHEN THE DISTANCE ' A' CANNOT BE MEASURED FROM INSIDE, USE THE METHODE AS FOLLOWS, SEE PROCEDURE B.

- USE DISTANCE OF 15mm (0.59in.) BACK FROM THE FASTENER ROW AS A RE POINT (15mm (0.59in.) IS AN AVERAGE EDGE MARGIN).

- MEASURE THE DISTANCE FROM THE CENTER OF THE DENT TO THE REFERE TO GET THE DISTANCE 'A'.

B: IS THE DISTANCE BETWEEN THE OUTER CONTOUR OF THE DENT AND ANY CU THE SKIN OR ANY FASTENER ROW.

NOTE: IN CASE OF DENTS AROUND STATIC PORTS, PITOT PROBES, TOTAL AIR TEMPE PROBES, ANGLE OF ATTACK SENSORS, CHECK THAT THE DENTS ARE WITHIN AREODYNAMIC REQUIREMENTS, REFER TO PARAGRAPH 4.

Skin Plates - Allowable Dent Limits
Figure 102 (sheet 1)

53-00-1

Printed in Germany

MEASURED FROM INSIDE
PROCEDURE A

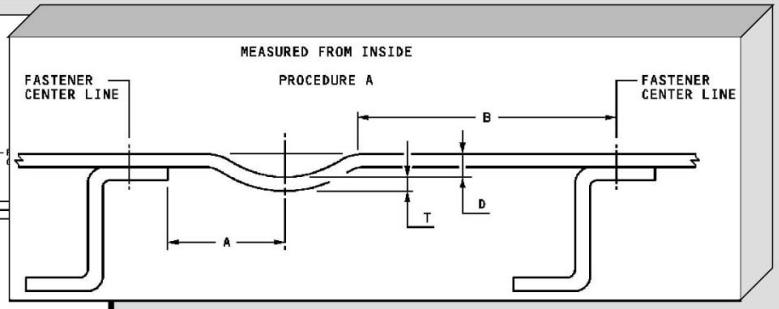

MEASURED FROM OUTSIDE
PROCEDURE B

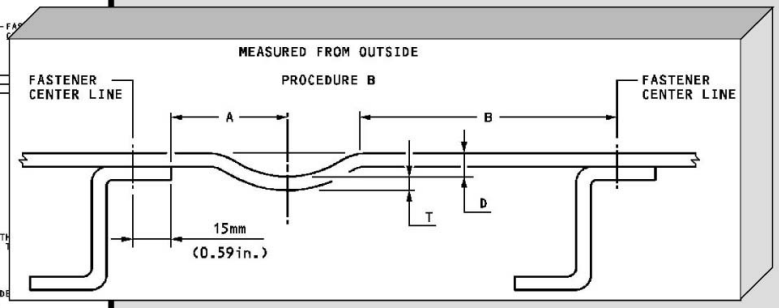

T: IS THE SKIN THICKNESS IN DENTED AREA. IF DENT AFFECTS SEVERAL THICKNESSES, EACH OF THEM HAS TO BE CONSIDERED AND THE WORST LIMITATION HAS TO BE APPLIED.

D: IS THE MAXIMUM DEPTH OF THE SKIN DENT.

A: IS THE DISTANCE FROM THE LOCATION OF THE MAXIMUM DEPTH OF THE DENT TO THE EDGE OF ADJACENT STIFFENING MEMBER, SEE PROCEDURE A. WHEN THE DISTANCE ' A' CANNOT BE MEASURED FROM INSIDE, USE THE METHODE AS FOLLOWS, SEE PROCEDURE B.

- USE DISTANCE OF 15mm (0.59in.) BACK FROM THE FASTENER ROW AS A REFERENCE POINT (15mm (0.59in.) IS AN AVERAGE EDGE MARGIN).

- MEASURE THE DISTANCE FROM THE CENTER OF THE DENT TO THE REFERENCE POINT TO GET THE DISTANCE 'A'.

B: IS THE DISTANCE BETWEEN THE OUTER CONTOUR OF THE DENT AND ANY CUTOUT IN THE SKIN OR ANY FASTENER ROW.

53-00-11 Page 107 Apr 01/04

ALLOWABLE DAMAGE INFORMATION - CONT'D

G7508471 - G3NT1T0 - FM51DG000000001

DAMAGE ASSESSMENT EXAMPLE 1 D/O (3)

ALLOWABLE DAMAGE INFORMATION (continued)

CONT'D

The measurement is taken from outside, since there is no access from inside. The following values are deduced from the damage mapping:
- T is the skin thickness in dented area,
- D is the maximum depth of the skin dent,
- Distance B is the smallest distance measured from the dent edge to any fastener row (frame, stringer) or any cutout in the skin,
- Distance A is the smallest distance measured from the deepest point of the dent to the closest adjacent structure,
- Distance X is the smallest distance measured from the deepest point of the dent to the closest fastener row.

If no access from inside, the measurement is taken from outside, from the deepest point of the dent to closest fastener row (distance X).
Distance A will become the distance X - 15mm, which is the average considered edge margin.

G7508471 - G3NT1T0 - FM51DG000000001

- Damage Identification
- Damage Geographical Location / Measurement
- Detailed Location
- Structure Identification
- **Allowable Damage Information**
- Allowable Damage Usage

Structural Repair Manual

- Front Pages
- Introduction
- Alphanumeric Index
- Chapter SRI
- Chapter 51
- Chapter 52
- **Chapter 53**
  - Table of Contents
  - **53-0...**
    - 53-00-00 – 001
    - **53-00-11 – 101**
    - 53-00-11 – 201
    - 53-00-12 – 101
    - 53-00-12 – 201
    - 53-00-13 – 101
    - 53-00-13 – 201
    - 53-00-14 – 101
    - 53-00-14 – 201
    - 53-0...
  - 53-1...
  - 53-2...
- Chapter 54
- Chapter 55

The measurement is taken from outside, since there is no access from inside.
The following values are deduced from the damage mapping.

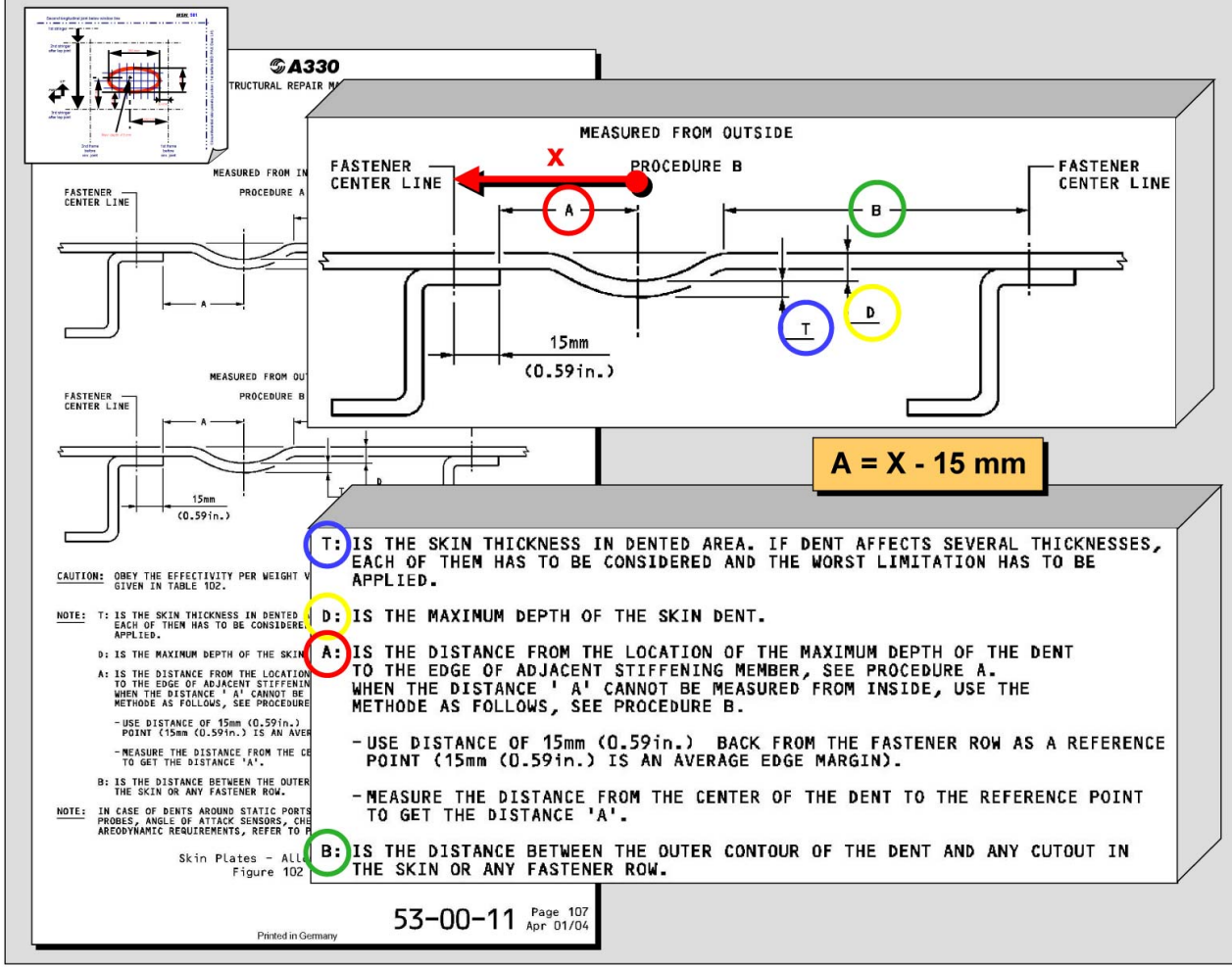

ALLOWABLE DAMAGE INFORMATION - CONT'D

G7508471 - G3NT1T0 - FM51DG00000001

DAMAGE ASSESSMENT EXAMPLE 1 D/O (3)

ALLOWABLE DAMAGE INFORMATION (continued)

CONT'D

Measure X distance; X = 65 mm (2.6 in). Since measured from outside, distance A = 65 mm - 15 mm = 50 mm (2 in). Measure distance B; B = 30 mm (1.18 in).

G7508471 - G3NT1T0 - FM51DG000000001

Damage Identification

Damage Geographical Location / Measurement

Detailed Location

Structure Identification

Allowable Damage Information

Allowable Damage Usage

Structural Repair Manual

- Front Pages
- Introduction
- Alphanumeric Index
- Chapter SRI
- Chapter 51
- Chapter 52
- Chapter 53
  - Table of Contents
  - 53-0...
    - 53-00-00 – 001
    - 53-00-11 – 101
    - 53-00-11 – 201
    - 53-00-12 – 101
    - 53-00-12 – 201
    - 53-00-13 – 101
    - 53-00-13 – 201
    - 53-00-14 – 101
    - 53-00-14 – 201
    - 53-0...
  - 53-1...
  - 53-2...
- Chapter 54
- Chapter 55

Measurement from the outside: value A is equal to X- 15 mm.

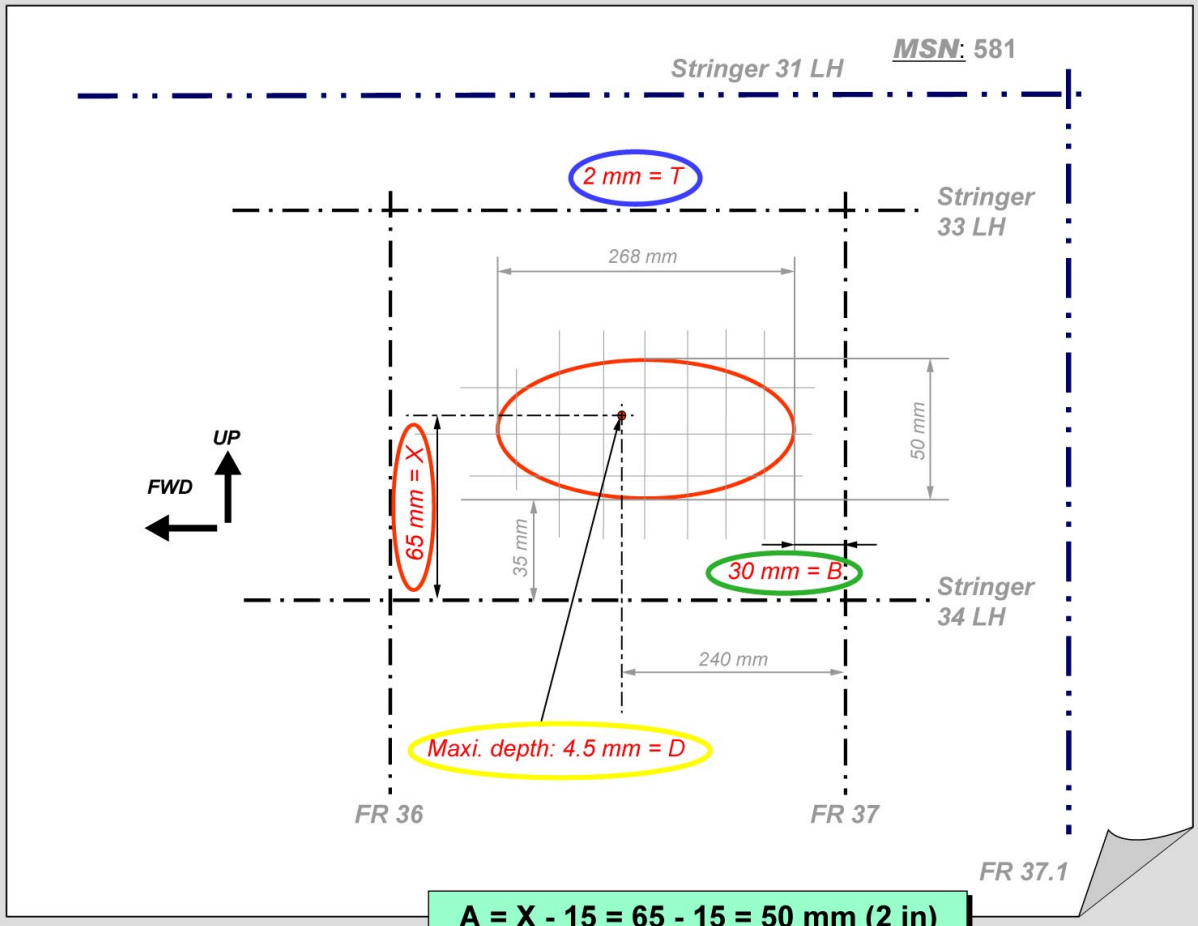

A = X - 15 = 65 - 15 = 50 mm (2 in)

ALLOWABLE DAMAGE INFORMATION - CONT'D

DAMAGE ASSESSMENT EXAMPLE 1 D/O (3)

ALLOWABLE DAMAGE INFORMATION (continued)

CONT'D

This diagram (figure 102, sheet 2) enables to determine if the damage is allowable and the condition of allowability. A note deals with possible damage on internal structure; if yes, refer to the SRM chapter 53, page block 201.

G7508471 - G3NT1T0 - FM51DG000000001

- Damage Identification
- Damage Geographical Location / Measurement
- Detailed Location
- Structure Identification
- Allowable Damage Information
- **Allowable Damage Usage**

Structural Repair Manual

- Front Pages
- Introduction
- Alphanumeric Index
- Chapter SRI
- Chapter 51
- Chapter 52
- **Chapter 53**
  - Table of Contents
  - 53-0...
  - 53-1...
  - **53-2...**
    - 53-20-00 – 001
    - 53-21-00 – 001
    - 53-21-11 – 001
    - **53-21-11 – 101**
    - 53-21-11 – 201
    - 53-21-12 – 001
    - 53-21-12 – 101
    - 53-21-12 – 201
    - 53-21-13 – 001
    - 53-2 -...
- Chapter 54
- Chapter 55

This diagram (figure 102, sheet 2) enables to determine if the damage is allowable and the condition of allowability.

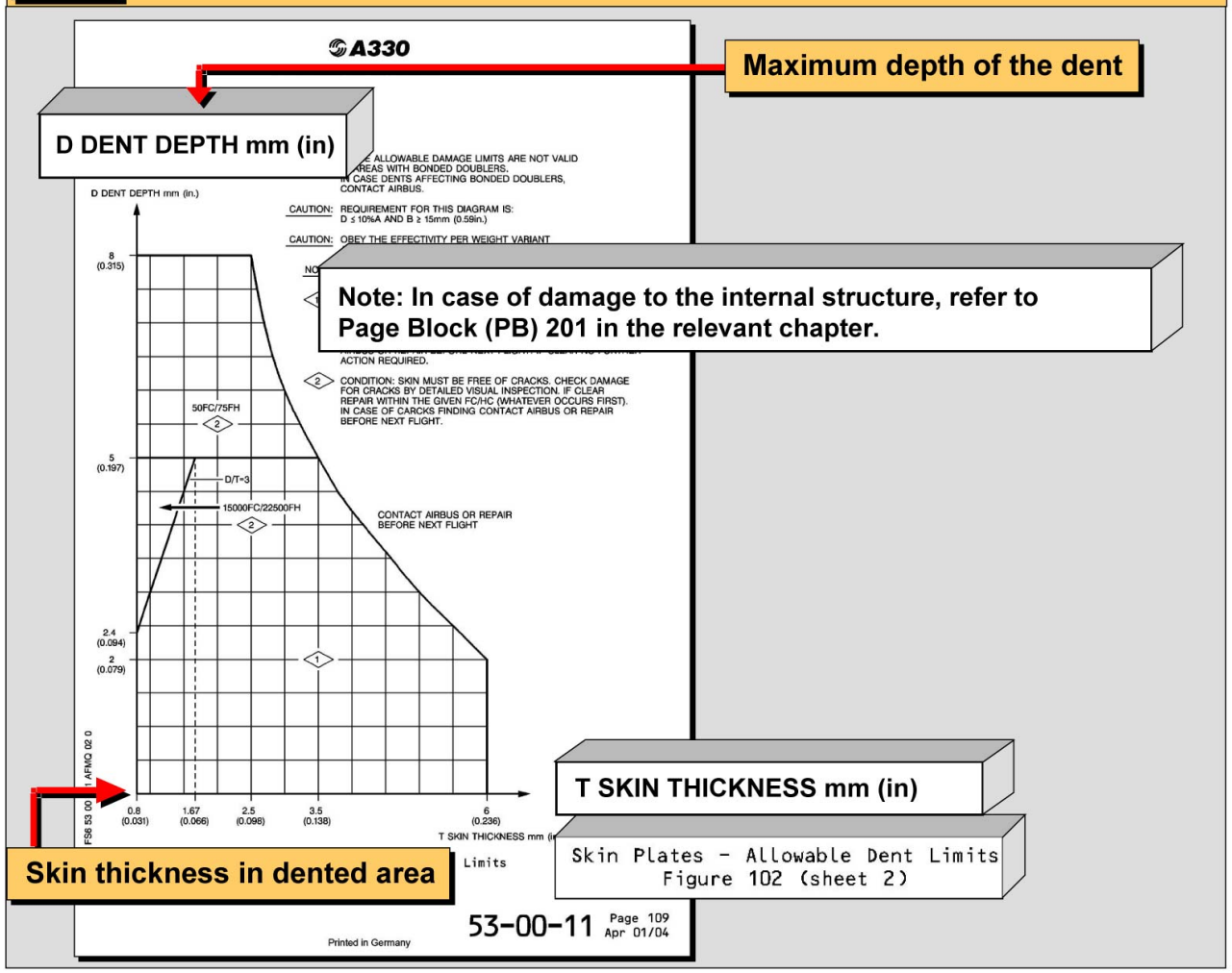

ALLOWABLE DAMAGE INFORMATION - CONT'D

DAMAGE ASSESSMENT EXAMPLE 1 D/O (3)

ALLOWABLE DAMAGE INFORMATION (continued)

CONT'D

Read carefully the caution which is: requirements for the use of this diagram is: D 10% A and B 15 mm (0.59 in); the first and the third caution have already been checked at an early stage.
Check these requirements:
- A = 50 mm (2 in); 10 % A = 5 mm > 4.5 mm: the first requirement is met,
- B = 30 mm (1.18 in) > 15 mm: the second requirement is met. The skin thickness in the dented area and the depth of the dent are the keys to get into to diagram. You must refer to the data collected before (damage mapping).

G7508471 - G3NT1T0 - FM51DG000000001

- Damage Identification
- Damage Geographical Location / Measurement
- Detailed Location
- Structure Identification
- Allowable Damage Information
- **Allowable Damage Usage**

Structural Repair Manual

- Front Pages
- Introduction
- Alphanumeric Index
- Chapter SRI
- Chapter 51
- Chapter 52
- **Chapter 53**
  - Table of Contents
  - 53-0...
  - 53-1...
  - **53-2...**
    - 53-20-00 – 001
    - **53-21-00 – 001**
    - 53-21-11 – 001
    - 53-21-11 – 101
    - 53-21-11 – 201
    - 53-21-12 – 001
    - 53-21-12 – 101
    - 53-21-12 – 201
    - 53-21-13 – 001
    - 53-2 -...
- Chapter 54
- Chapter 55

Requirements for this diagram are fulfilled.

Already checked at an early stage

CAUTION: THESE ALLOWABLE DAMAGE LIMITS ARE NOT VALID IN AREAS WITH BONDED DOUBLERS. IN CASE DENTS AFFECTING BONDED DOUBLERS, CONTACT AIRBUS.

CAUTION: REQUIREMENT FOR THIS DIAGRAM IS: D ≤ 10%A AND B ≥ 15mm (0.59in.)

CAUTION: OBEY THE EFFECTIVITY PER WEIGHT VARIANT AND AIRCRAFT TYPE GIVEN IN TABLE 102.

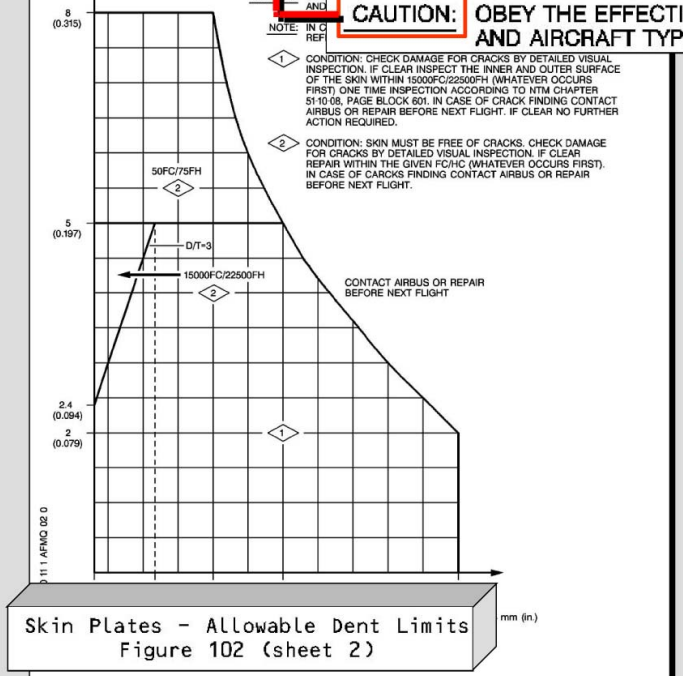

Skin Plates - Allowable Dent Limits
Figure 102 (sheet 2)

53-00-11 Page 109 Apr 01/04

Printed in Germany

B ≥15mm (0.590 in.)

AND

D ≤ 10% A

B = 30 mm (1.18 in.) >15mm — OK

A = 50 mm (2 in.)

10% A = 5 mm

D = 4.5 mm < 10% A — OK

Requirements fulfilled

ALLOWABLE DAMAGE INFORMATION - CONT'D

G7508471 - G3NT1T0 - FM51DG000000001

DAMAGE ASSESSMENT EXAMPLE 1 D/O (3)

ALLOWABLE DAMAGE INFORMATION (continued)

CONT'D

The skin thickness in the dented area is 2.0 mm (found in the identification pages).
The depth of the dent is 4.5 mm (measured from the A/C damage mapping). These two values are plotted onto the diagram, which defines a point. The area where this point is located defines the subsequent actions to be performed. For the concerned dent: "check damage for cracks by detailed visual inspection. If clear inspect the inner and outer surface of the skin within 15000 Flight Cycles (FC) / 22500 Flight Hours (FH) (whatever occurs first) one time inspection according to NTM chapter 51-10-08, page block 601. In case of crack finding contact Airbus or repair before next flight. If clear no further action required".

G7508471 - G3NT1T0 - FM51DG000000001

- Damage Identification
- Damage Geographical Location / Measurement
- Detailed Location
- Structure Identification
- Allowable Damage Information
- **Allowable Damage Usage**

Structural Repair Manual

- Front Pages
- Introduction
- Alphanumeric Index
- Chapter SRI
- Chapter 51
- Chapter 52
- **Chapter 53**
  - Table of Contents
  - 53-0...
  - 53-1...
  - **53-2...**
    - 53-20-00 – 001
    - 53-21-00 – 001
    - 53-21-11 – 001
    - **53-21-11 – 101**
    - 53-21-11 – 201
    - 53-21-12 – 001
    - 53-21-12 – 101
    - 53-21-12 – 201
    - 53-21-13 – 001
    - 53-2 -...
- Chapter 54
- Chapter 55

Two values, the skin thickness in the dented area and the depth of the dent, are plotted onto the diagram, which defines a point. The area where this point is located defines the subsequent actions to be performed.

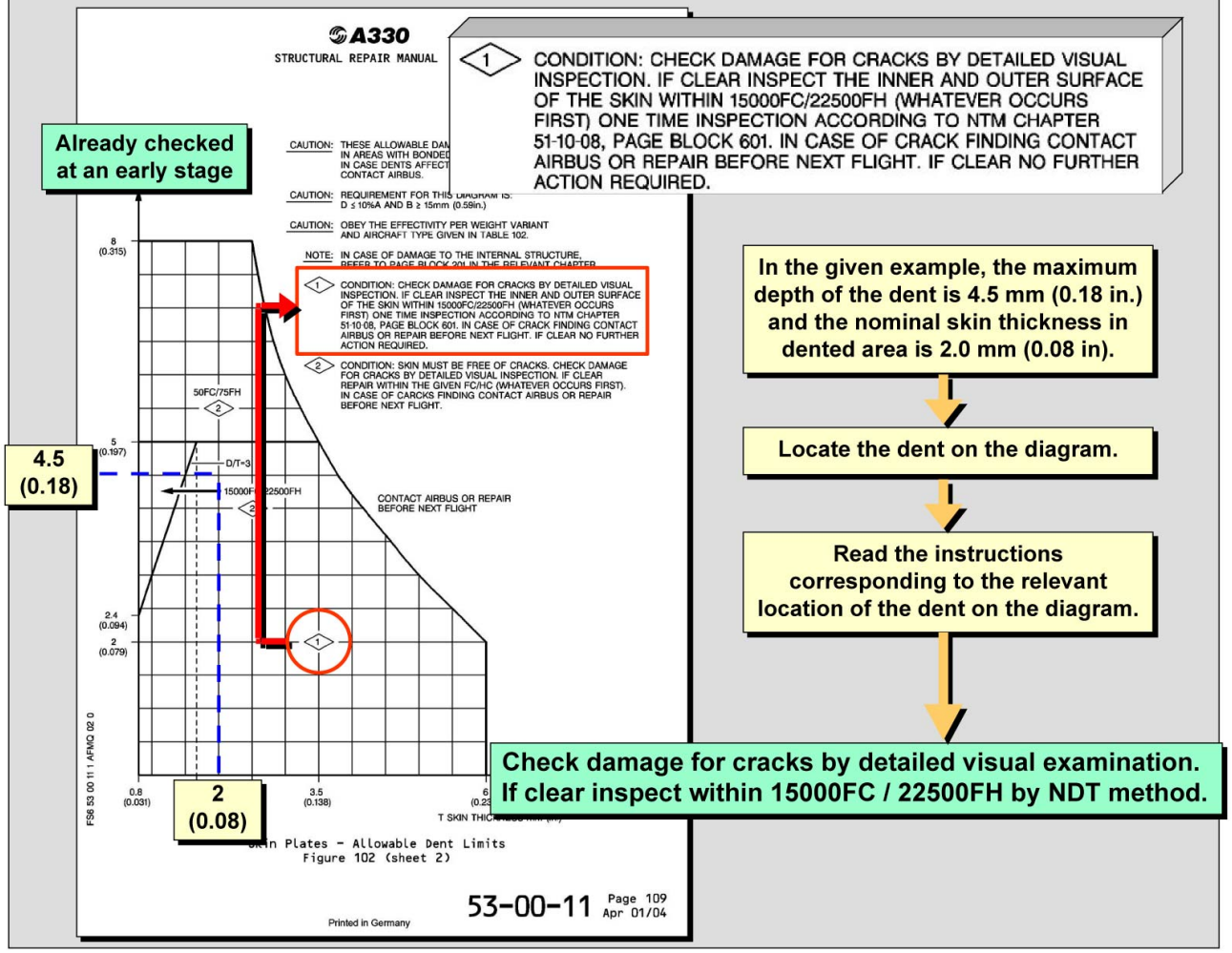

ALLOWABLE DAMAGE INFORMATION - CONT'D

DAMAGE ASSESSMENT EX. 1 OPERATIONAL SCENARIO (3)

Session Objectives

SESSION SET-UP

DAMAGE ASSESSMENT PROCEDURE

- **IDENTIFICATION OF THE DAMAGE**
- **DETAIL IDENTIFICATION OF THE DAMAGE PART**
- **ALLOWABLE DAMAGE - GENERAL**
- **DAMAGE CRITERIA**
- **DENT MEASUREMENT PROCEDURE**
- **DENT MEASUREMENT**
- **ALLOWABLE DENT DIAGRAM**
- **CONCLUSION**

DAMAGE LOCATION

G7508471 - G3NT1T0 - FM5122000000001

ASSUMPTION: MSN 581 STD 8, WEIGHT VARIANT: 020

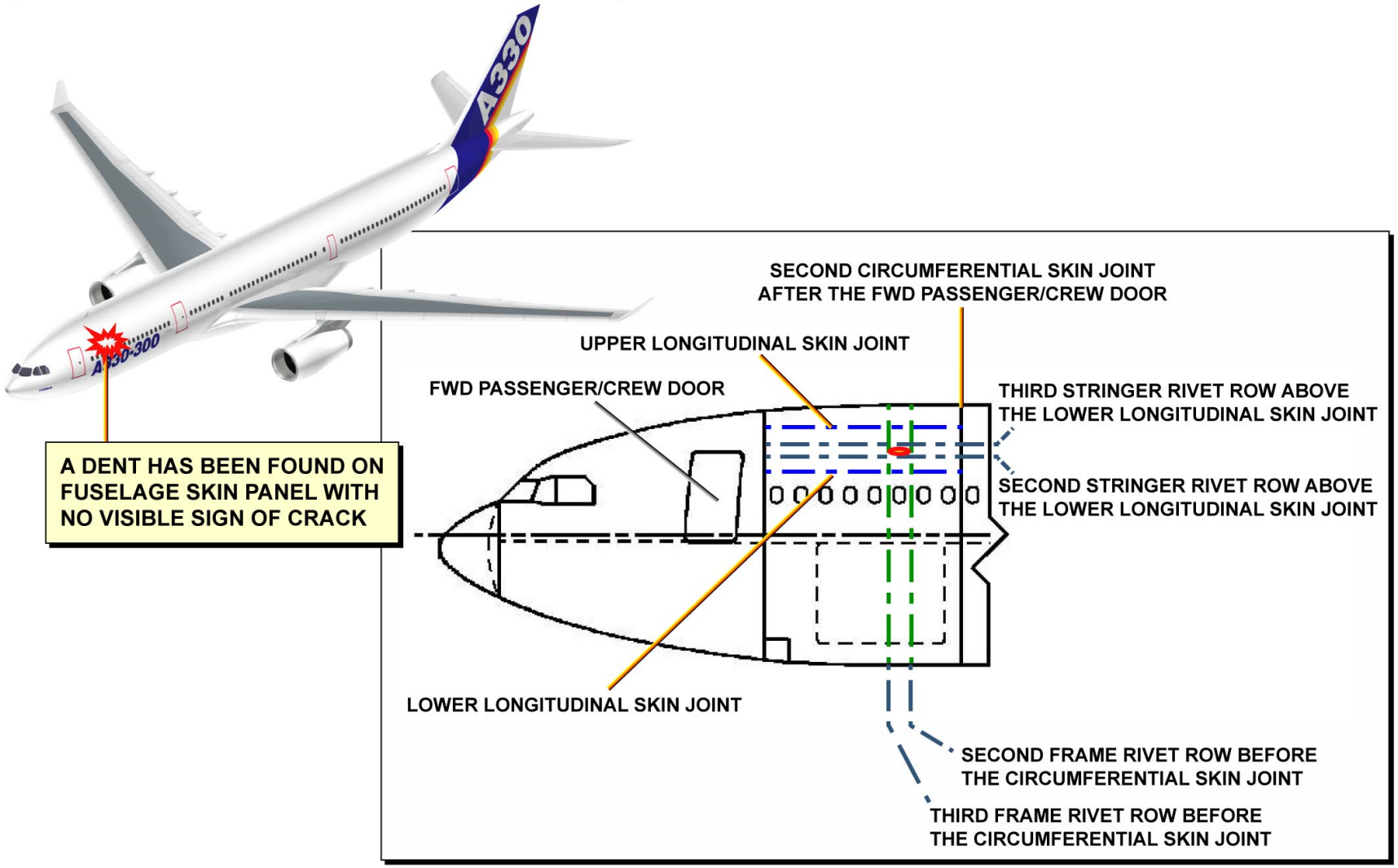

SESSION OBJECTIVES ... DAMAGE LOCATION

G7508471 - G3NT1T0 - FM5122000000001

DAMAGE ASSESSMENT EX. 1 OPERATIONAL SCENARIO (3)

MAPPING

draft

G7508471 - G3NT1T0 - FM5122000000001

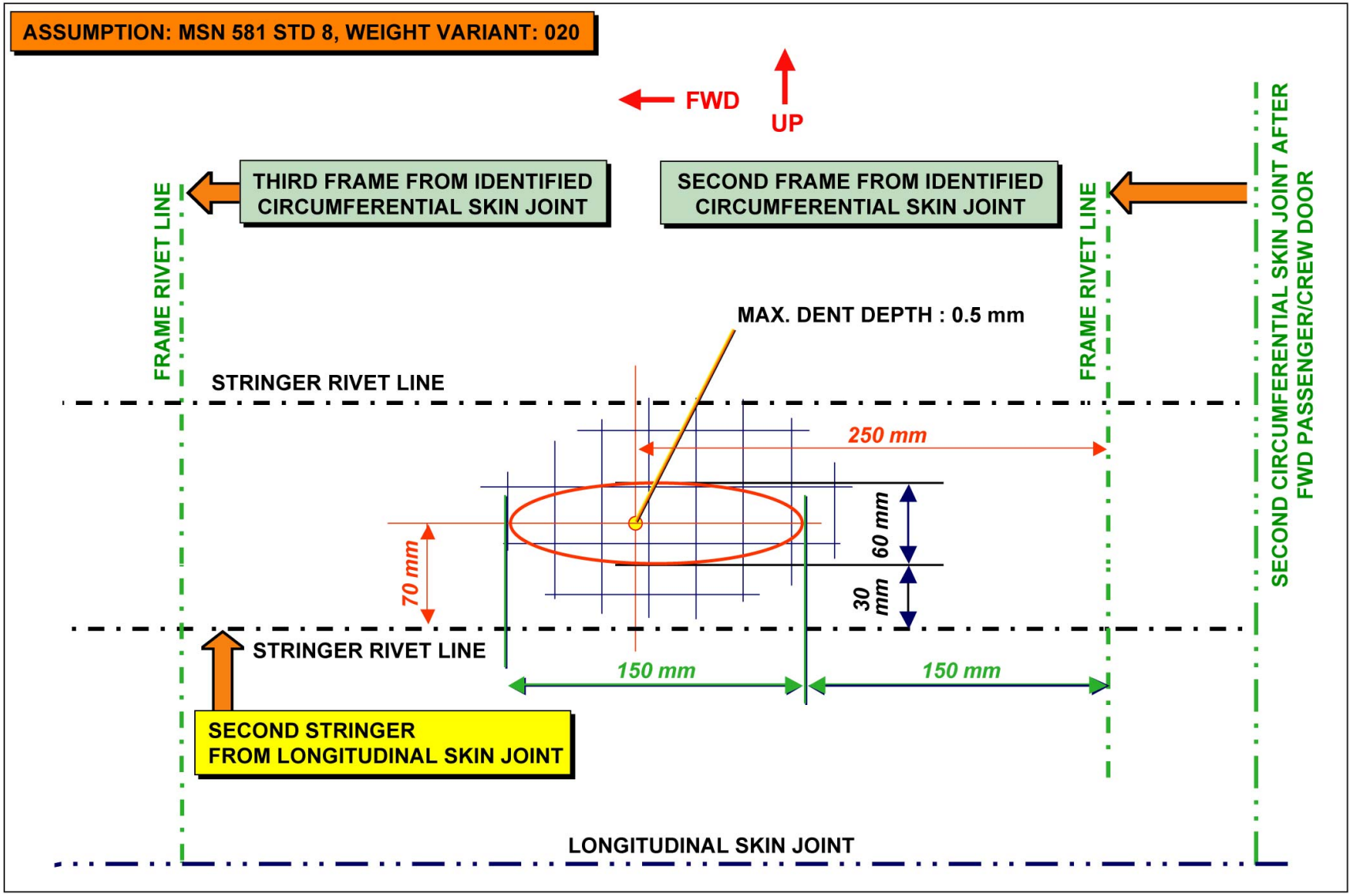

MAPPING - DRAFT

G7508471 - G3NT1T0 - FM5122000000001

DAMAGE ASSESSMENT EX. 1 OPERATIONAL SCENARIO (3)

MAPPING (continued)

FINALIZATION

G7508471 - G3NT1T0 - FM5122000000001

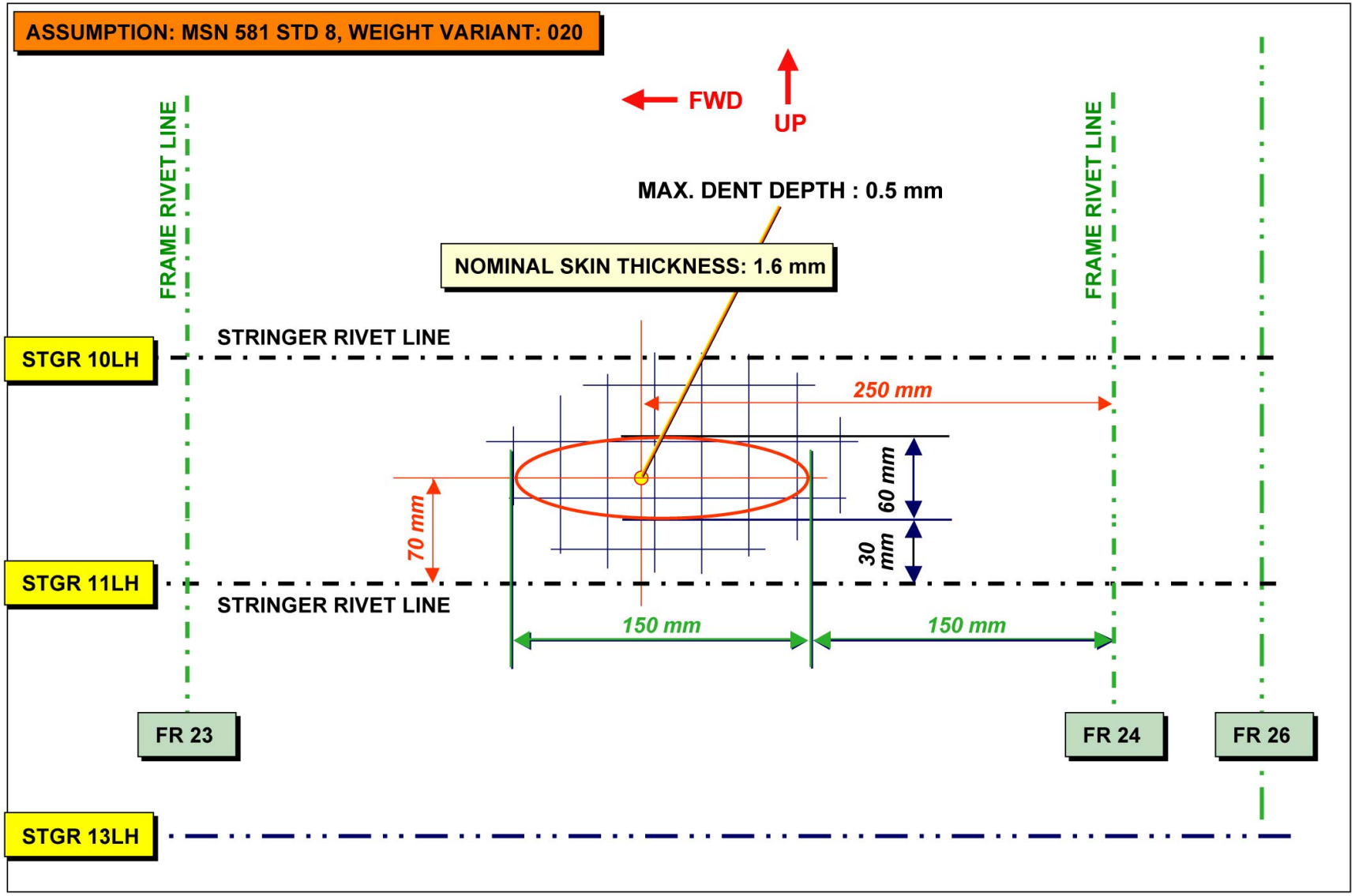

MAPPING - FINALIZATION

DAMAGE ASSESSMENT EX. 1 OPERATIONAL SCENARIO (3)

ALLOWABLE DENT DIAGRAM

G7508471 - G3NT1T0 - FM5122000000001

IN THE GIVEN EXAMPLE, THE MAXIMUM DEPTH OF THE DENT IS 0.5 mm AND THE NOMINAL SKIN THICKNESS IN DENTED AREA IS 1.6 mm.

LOCATE THE DENT ON THE DIAGRAM.

READ THE INSTRUCTIONS CORRESPONDING TO THE RELEVANT LOCATION OF THE DENT ON THE DIAGRAM.

CHECK DAMAGE FOR CRACKS BY DETAILED VISUAL INSPECTION. IF CLEAR INSPECT THE INNER AND OUTER SURFACE OF THE SKIN WITHIN 15000 FC/22500 FH (WHATEVER OCCURS FIRST) ONE TIME INSPECTION, ACCORDING TO NTM CHAPTER 51-10-08, PAGE BLOCK 601. IN CASE OF CRACK FINDING CONTACT AIRBUS OR REPAIR BEFORE NEXT FLIGHT. IF CLEAR NO FURTHER ACTION REQUIRED.

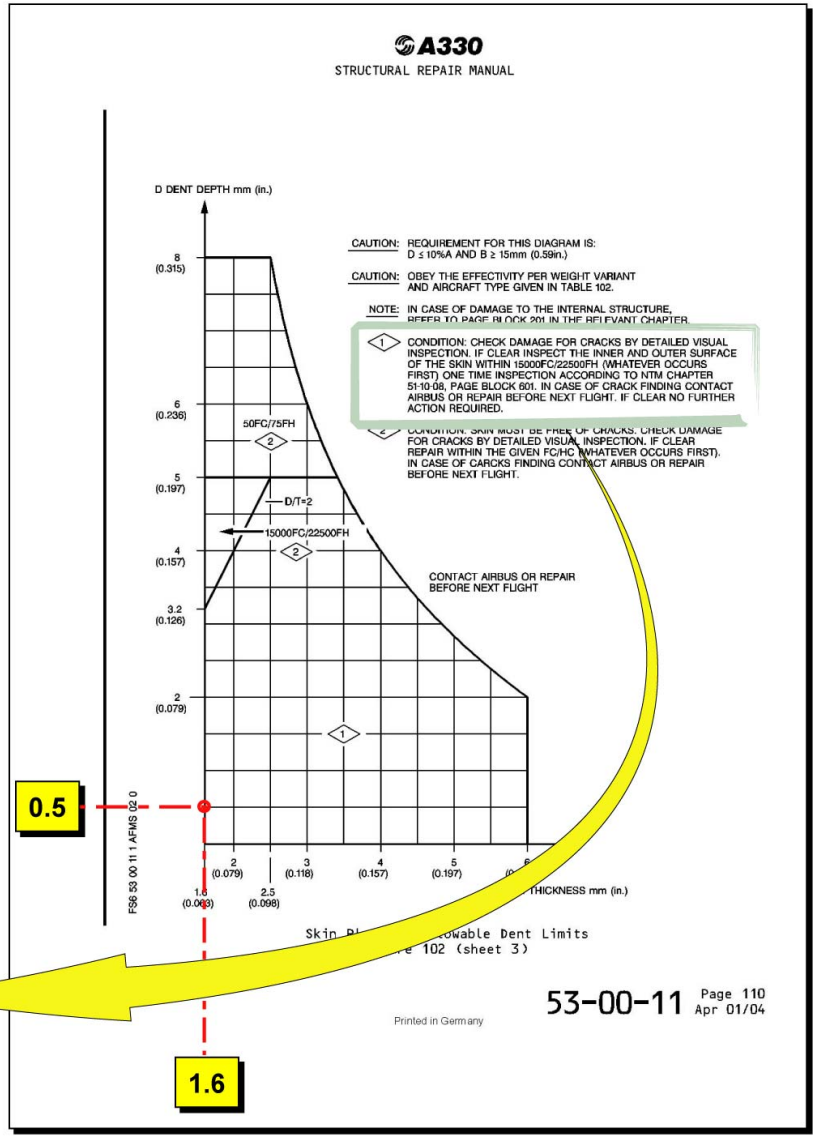

ALLOWABLE DENT DIAGRAM

G7508471 - G3NT1T0 - FM512200000001

DAMAGE ASSESSMENT EX. 2 OPERATIONAL SCENARIO (3)

SESSION OBJECTIVES

SESSION SET-UP

DAMAGE ASSESSMENT PROCEDURE

- **DAMAGE IDENTIFICATION/LOCATION**
- **DETAILED IDENTIFICATION OF THE DAMAGED PART**
- **ALLOWABLE DAMAGE - GENERAL**
- **DAMAGE CRITERIA**
- **ALLOWABLE DAMAGE USAGE/FINAL DECISION**
- **CONCLUSION**

DAMAGE LOCATION

G7508471 - G3NT1T0 - FM5124000000001

ASSUMPTION: MSN 581 STD 8, WEIGHT VARIANT: 020

A SCRATCH HAS BEEN FOUND ON FUSELAGE SKIN PANEL WITH NO VISIBLE SIGN OF CRACK

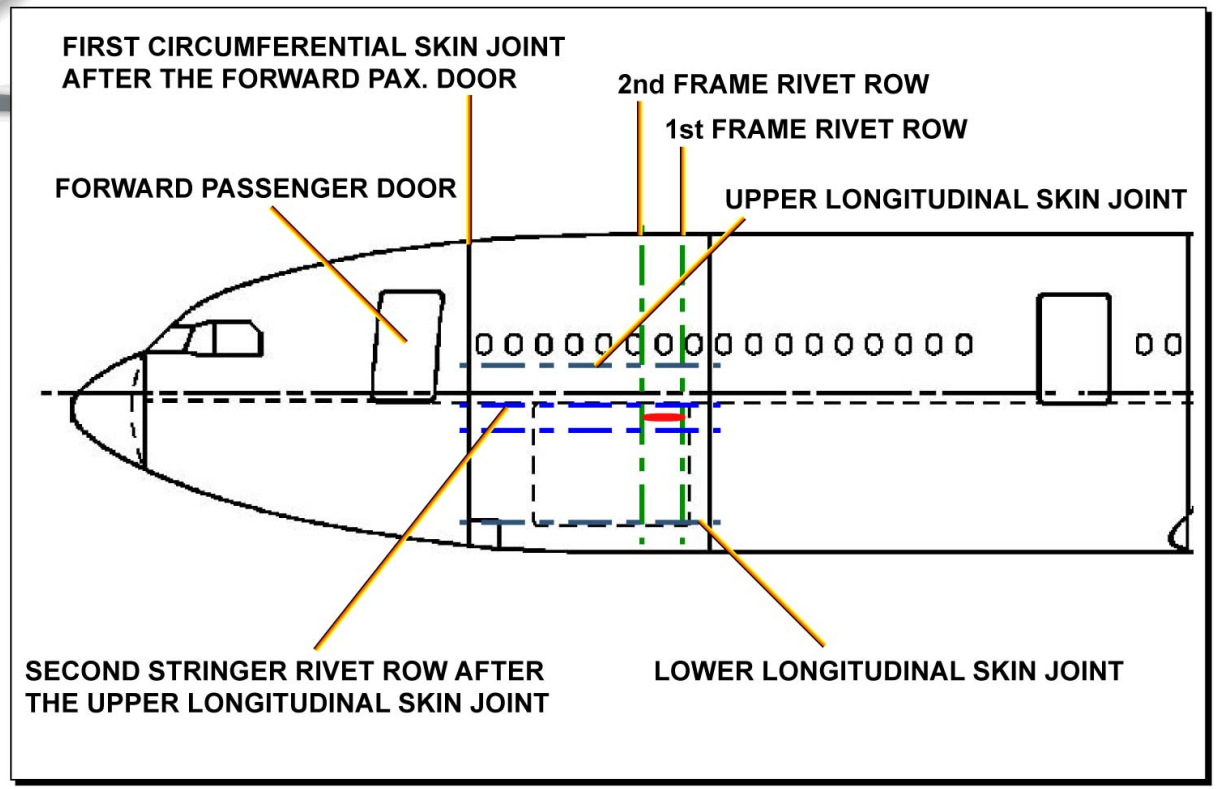

SESSION OBJECTIVES ... DAMAGE LOCATION

G7508471 - G3NT1T0 - FM5124000000001

DAMAGE ASSESSMENT EX. 2 OPERATIONAL SCENARIO (3)

MAPPING

DRAFT

G7508471 - G3NT1T0 - FM5124000000001

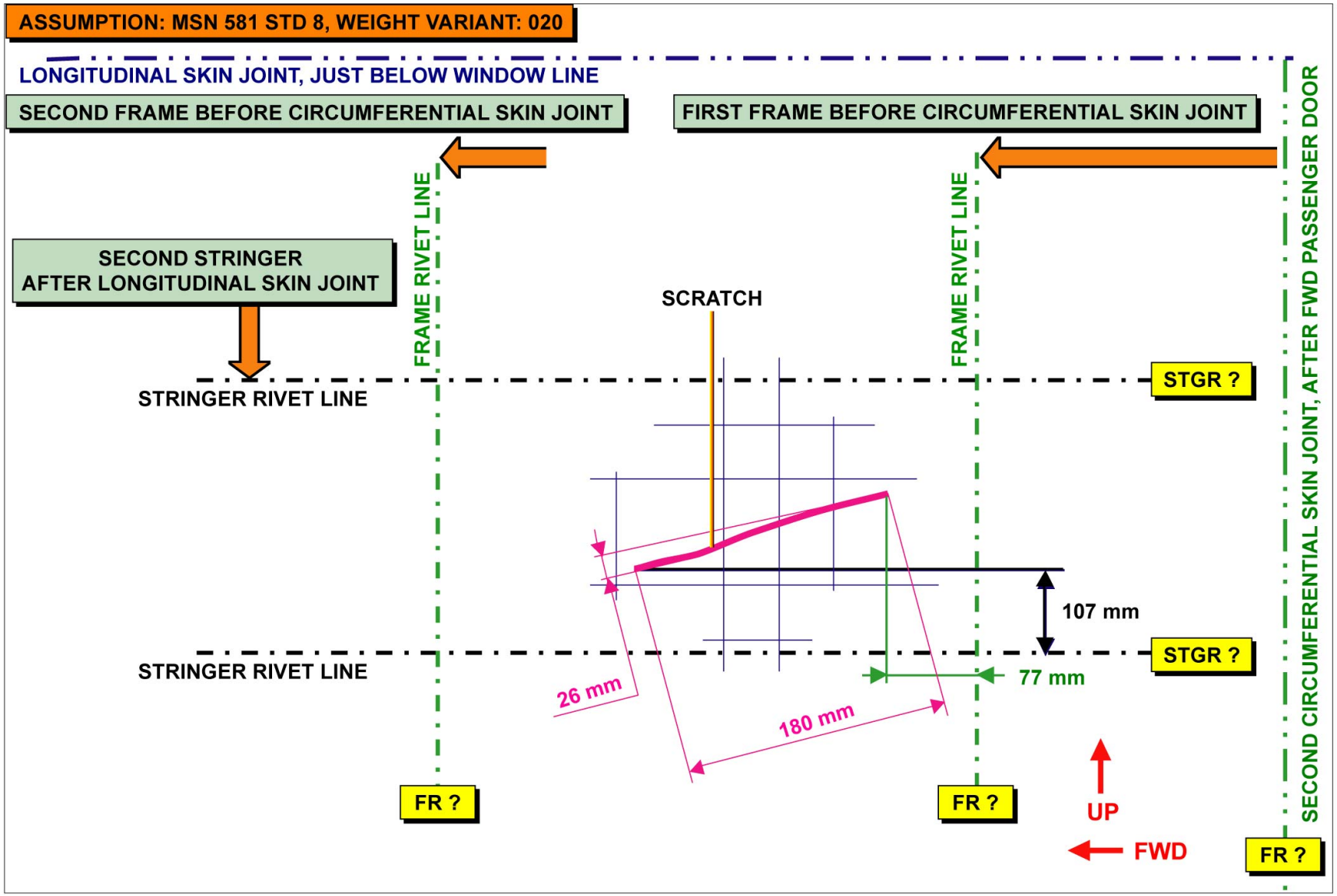

MAPPING - DRAFT

DAMAGE ASSESSMENT EX. 2 OPERATIONAL SCENARIO (3)

MAPPING (continued)

FINALIZATION

G7508471 - G3NT1T0 - FM5124000000001

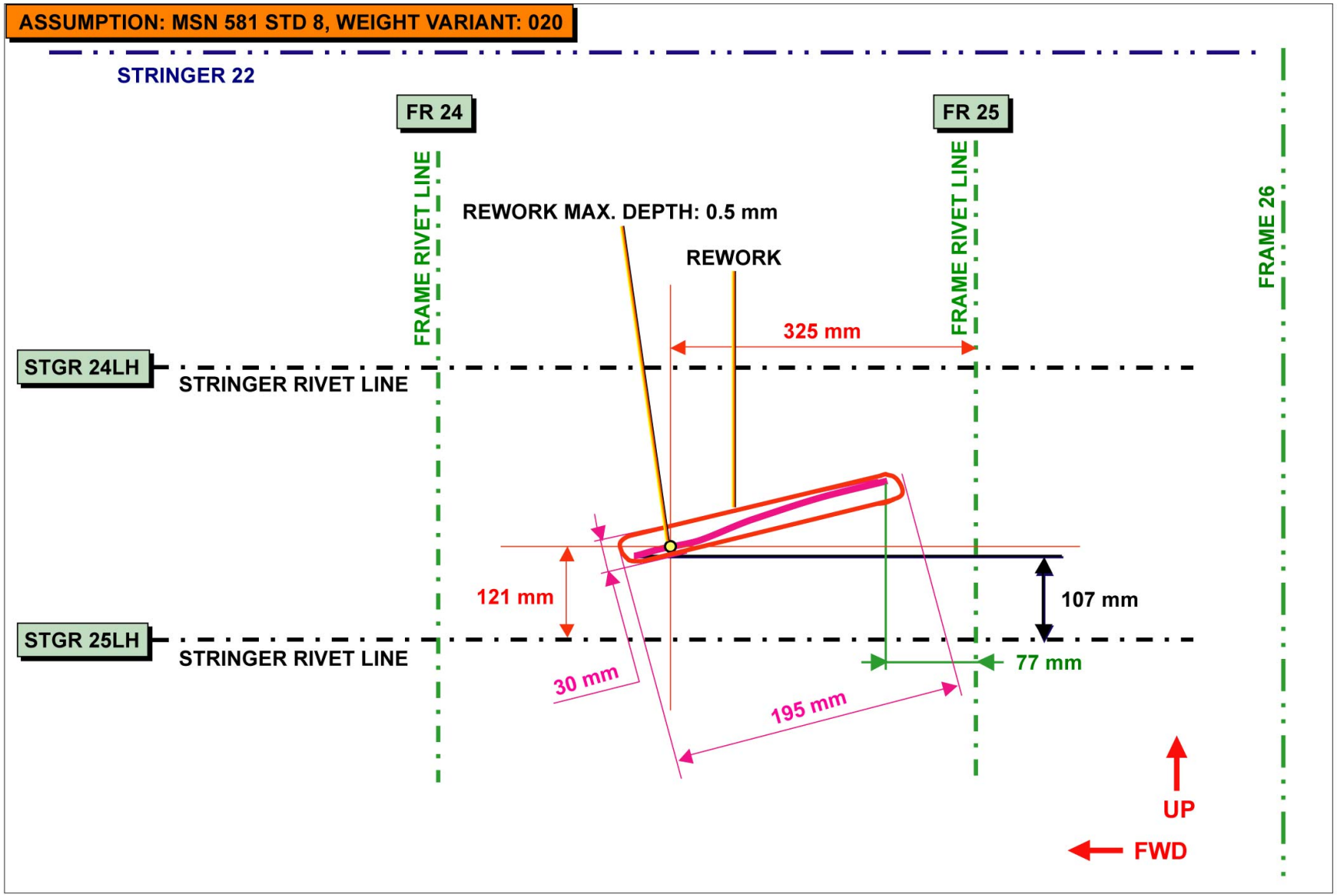

MAPPING - FINALIZATION

DAMAGE ASSESSMENT EX. 2 OPERATIONAL SCENARIO (3)

ALLOWABLE REWORK DIAGRAM

G7508471 - G3NT1T0 - FM5124000000001

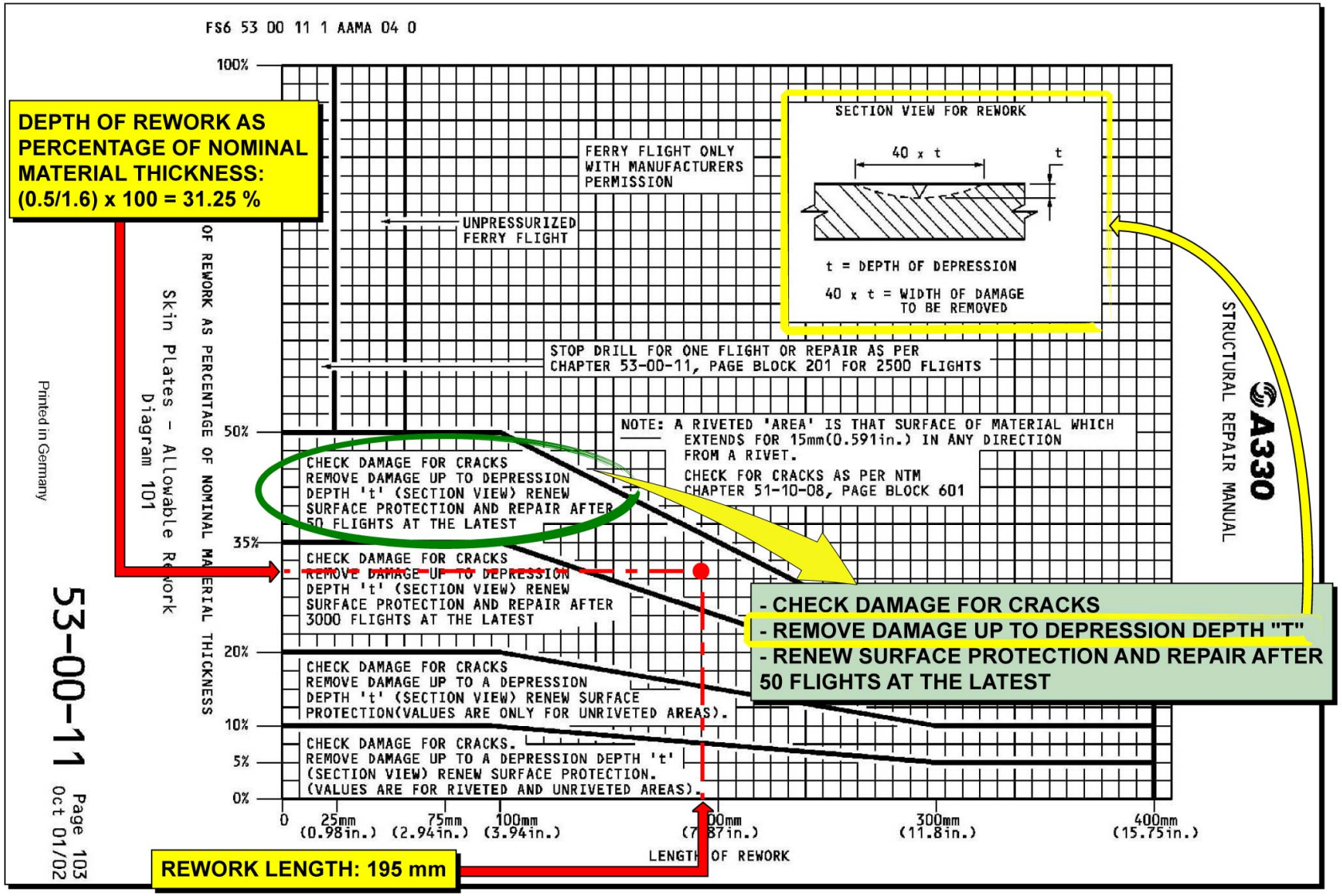

ALLOWABLE REWORK DIAGRAM

G7508471 - G3NT1T0 - FM5124000000001

AIRBUS S.A.S.
31707 BLAGNAC cedex, FRANCE
STM
REFERENCE G7508471
NOVEMBER 2008
PRINTED IN FRANCE
AIRBUS S.A.S. 2008
ALL RIGHTS RESERVED

AN EADS COMPANY

A330-200/300
TECHNICAL TRAINING MANUAL
MAINTENANCE COURSE - T1 (LVL 2&3) (RR Trent 700)
DOORS

This document must be used for training purposes only

Under no circumstances should this document be used as a reference

It will not be updated.

All rights reserved
No part of this manual may be reproduced in any form,
by photostat, microfilm, retrieval system, or any other means,
without the prior written permission of AIRBUS S.A.S.

AIRBUS Environmental Recommendation
Please consider your environmental responsability before printing this document.

DOORS

Doors Line Maintenance Briefing (2) 2

EMERGENCY EXITS

Passenger Door Control Mechanism D/O (3) 52
Doors Escape Facility Release Mechanism D/O (3) 64

CARGO DOORS

Forward and AFT Cargo Doors D/O (3) 74
Cargo Doors Bulk Operation D/O (3) 82
Cargo Doors Locking Mechanism D/O (3) 86
Cargo Doors FWD and AFT Hydraulic System D/O (3) 98

COCKPIT DOOR

Cockpit Doors D/O (3) 126

DOOR AND SLIDE CONTROL

Door & Slide Control System PAX/Crew Door D/O (3) 140
DSCS Forward and AFT Cargo Door D/O (3) 156
DSCS Bulk Cargo & Avionics COMPT Doors D/O (3) 168

MAINTENANCE PRACTICE

Doors System Base Maintenance (3) 170

G7508471 - G3NT1T0

DOORS LINE MAINTENANCE BRIEFING (2)

SYSTEM OVERVIEW

The doors system has:
- the cabin doors,
- the cockpit door,
- the cargo doors,
- the avionics compartment doors,
- the Doors and Escape Slides Control System (DSCS).

When you operate on the doors system, you must obey all the safety procedures listed in the AMM.

PASSENGER AND EMERGENCY DOORS LOCKING SYSTEM

Door locking/unlocking can be done either from the inner handle or the outer handle. Both handles operate a mechanical linkage to help in all the door movements: Lowering, lifting and outward opening. Two locking hooks located on the upper edge and a locking shaft lock the door.

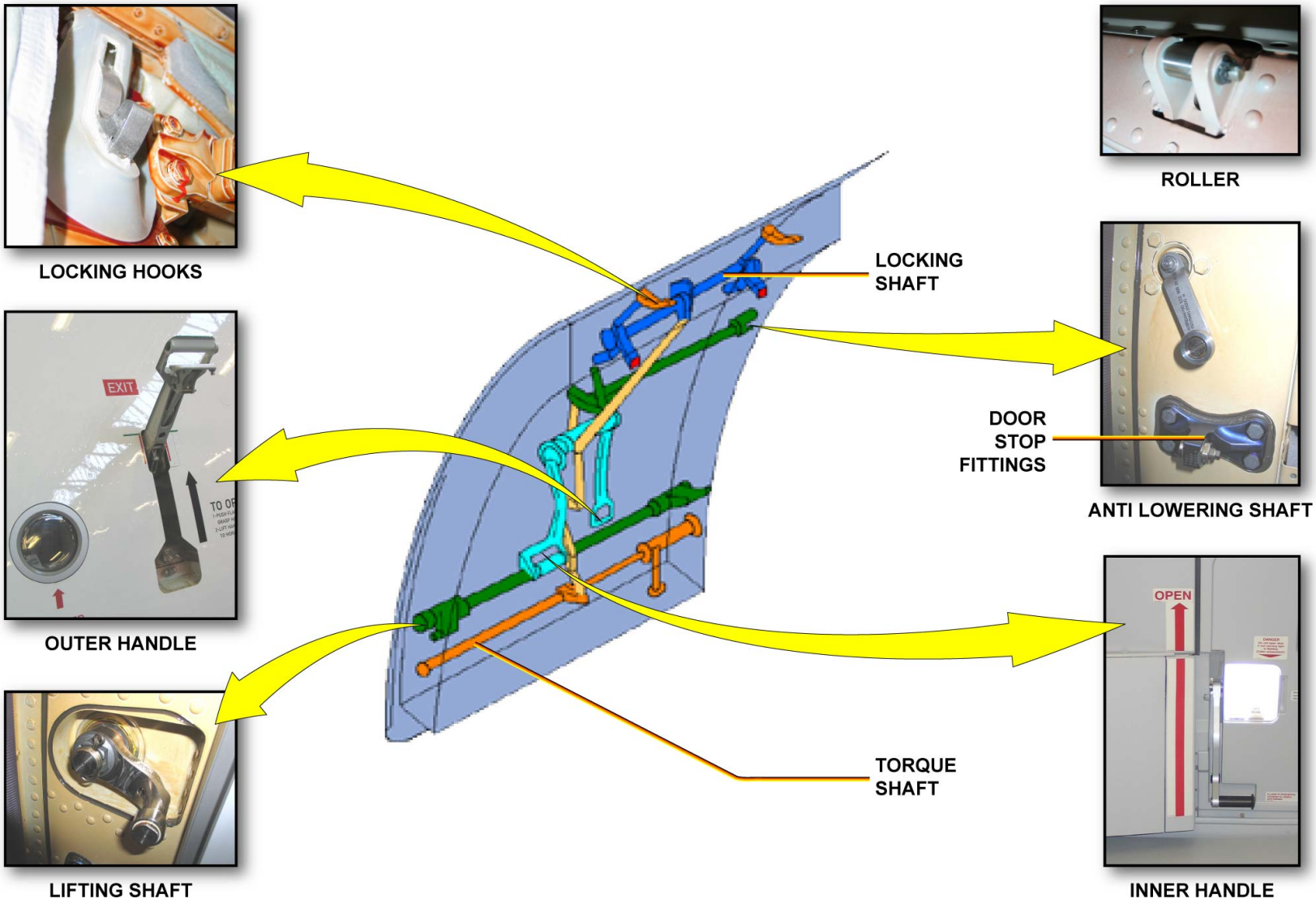

SYSTEM OVERVIEW - PASSENGER AND EMERGENCY DOORS LOCKING SYSTEM

DOORS LINE MAINTENANCE BRIEFING (2)

SYSTEM OVERVIEW (continued)

PASSENGER AND EMERGENCY DOORS EMERGENCY SYSTEM

The emergency system has:
- an arming lever controlling the girt bar,
- a damper and emergency-operation cylinder,
- an escape slide/raft packed into a container installed at the bottom of the door.

In DISARMED mode, the mechanical linkage secures the girt bar to the door. The damper and emergency-operation cylinder damps the door movement.

In ARMED mode, the arming mechanical linkage attaches the girt bar to the structure in order to deploy the escape slide/raft during the opening.

The damper and emergency-operation cylinder opens the door automatically when the handle is raised to let the escape slide/raft deploy in ARMED mode.

G7508471 - G3NT1T0 - FM52B1000000001

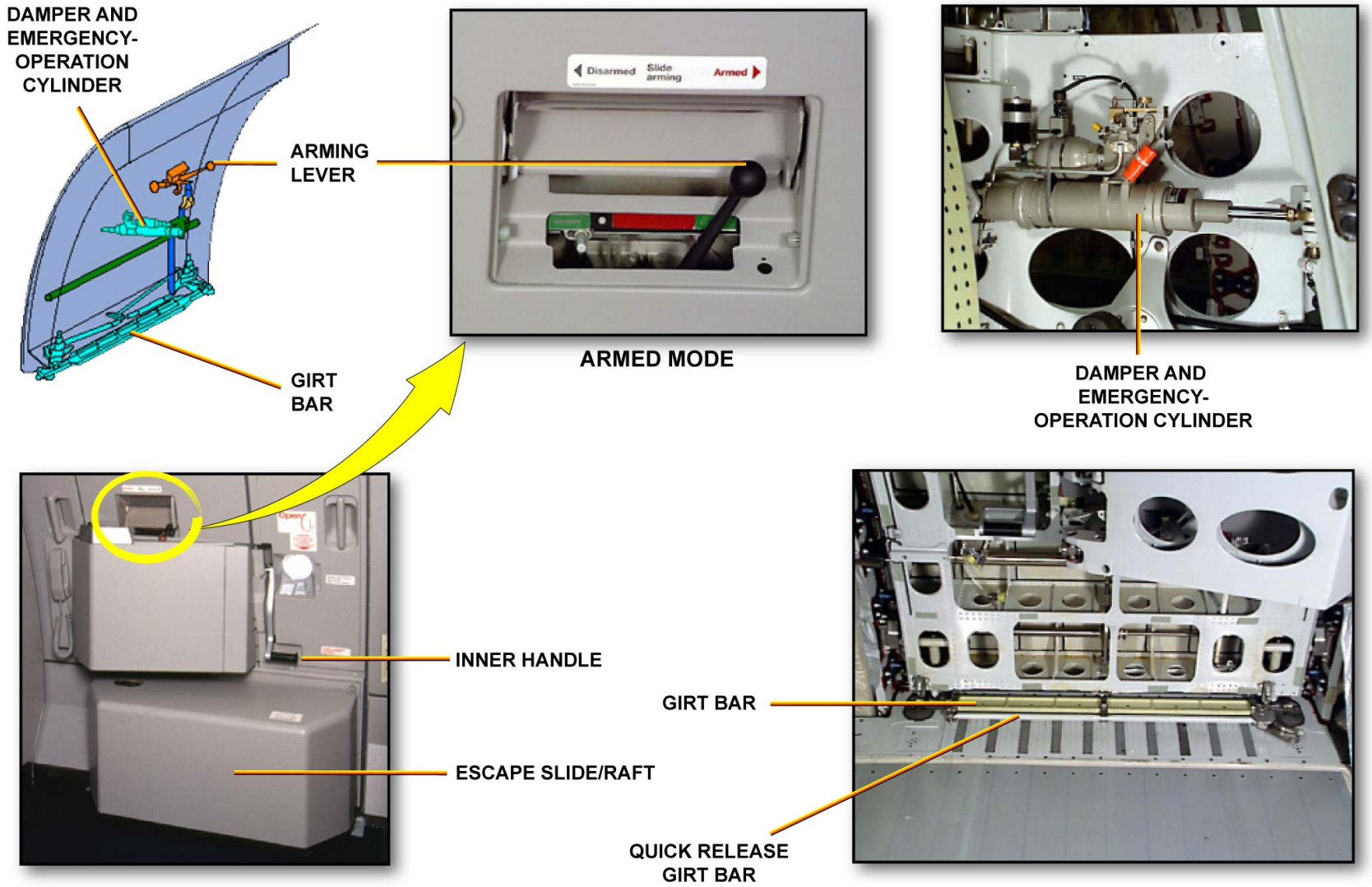

SYSTEM OVERVIEW - PASSENGER AND EMERGENCY DOORS EMERGENCY SYSTEM

G7508471 - G3NT1T0 - FM52B1000000001

DOORS LINE MAINTENANCE BRIEFING (2)

SYSTEM OVERVIEW (continued)

EMERGENCY EXITS LOCKING SYSTEM

Door locking/unlocking is initiated either from the outer handle or the inner handle. Only one locking hook is operated. It is the same type of mechanical linkage as the type A passenger doors. The emergency system has an arming lever operating a girt via a mechanical linkage.

NOTE: The escape slide/raft is packed into a container installed at the bottom of the door.

The damper and emergency-operation cylinder work also as a damper in disarmed mode or as an emergency-operation cylinder in armed mode.

G7508471 - G3NT1T0 - FM52B1000000001

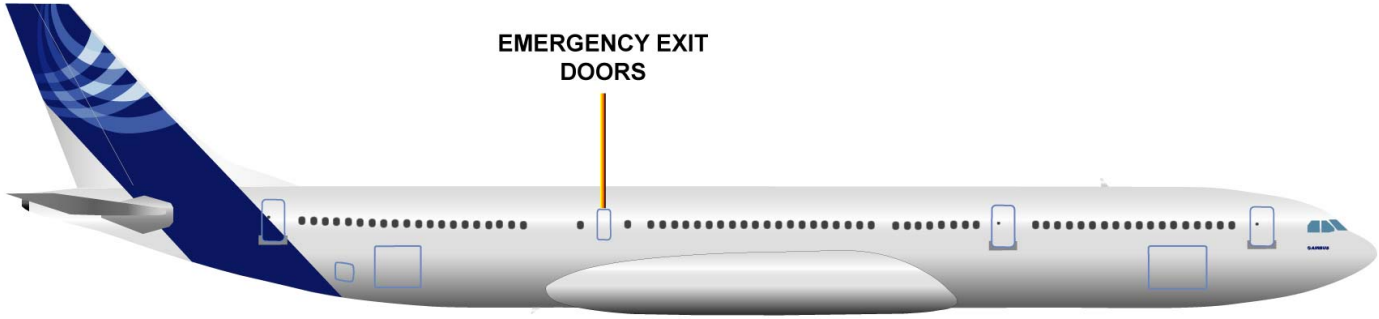

EMERGENCY EXIT DOOR
(OUTSIDE VIEW)

EMERGENCY EXIT DOOR
(INSIDE VIEW)

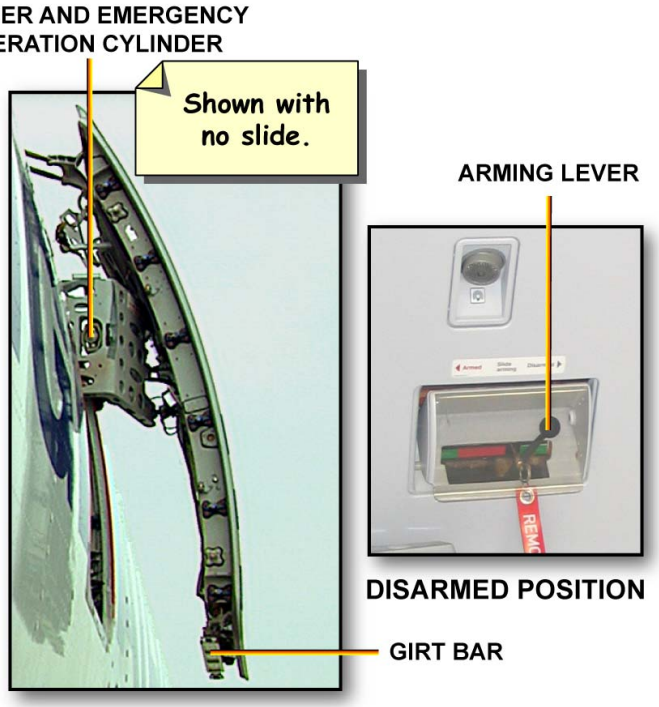

EMERGENCY EXIT DOOR
(OPENED)

SYSTEM OVERVIEW - EMERGENCY EXITS LOCKING SYSTEM

DOORS LINE MAINTENANCE BRIEFING (2)

SYSTEM OVERVIEW (continued)

CARGO DOORS

The aircraft has three cargo compartment doors installed on the lower right hand side of the fuselage. The three doors give access to the cargo compartments:
- the FWD and aft doors are hydraulically operated,
- the bulk cargo door is manually operated.

G7508471 - G3NT1T0 - FM52B1000000001

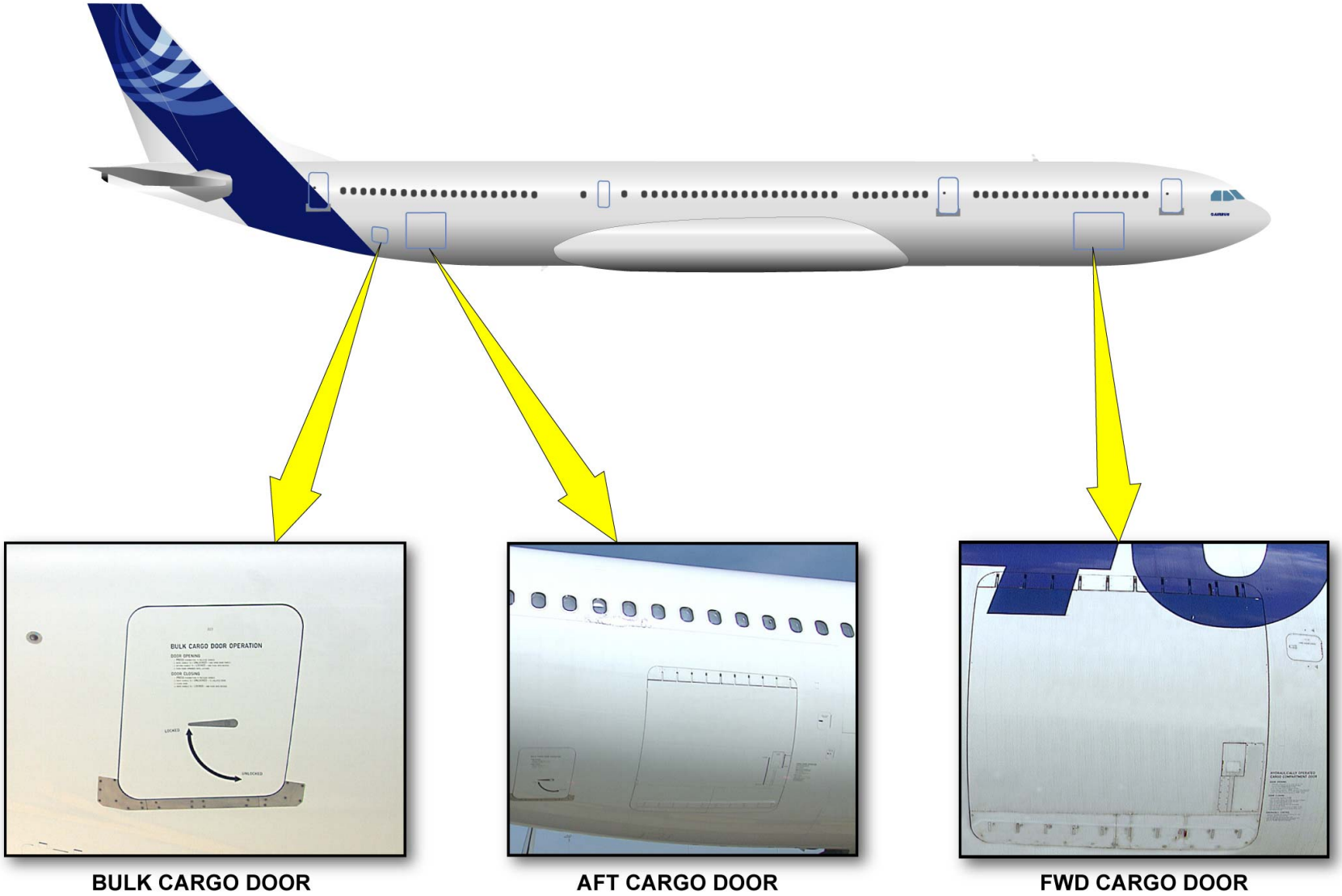

SYSTEM OVERVIEW - CARGO DOORS

G7508471 - G3NT1T0 - FM52B1000000001

DOORS LINE MAINTENANCE BRIEFING (2)

SYSTEM OVERVIEW (continued)

CARGO DOORS LOCKING AND LATCHING

The door has:
- a locking handle,
- a latching handle.

The locking handle gives a safety by securing the hooks in the latched position. It operates a locking shaft, which secures the latching shaft, when the hooks are engaged with the rollers. When the locking handle is in the unlocked position it gives access to the latching handle. Indicator flags extrude from the door skin if the locking system is not in the fully locked position. A catch pin safeties the latching handle in the fully latched position. A P/B on the latching handle must be pressed to release the catch. The cargo door will then leave the fuselage frame under gravity.

G7508471 - G3NT1T0 - FM52B1000000001

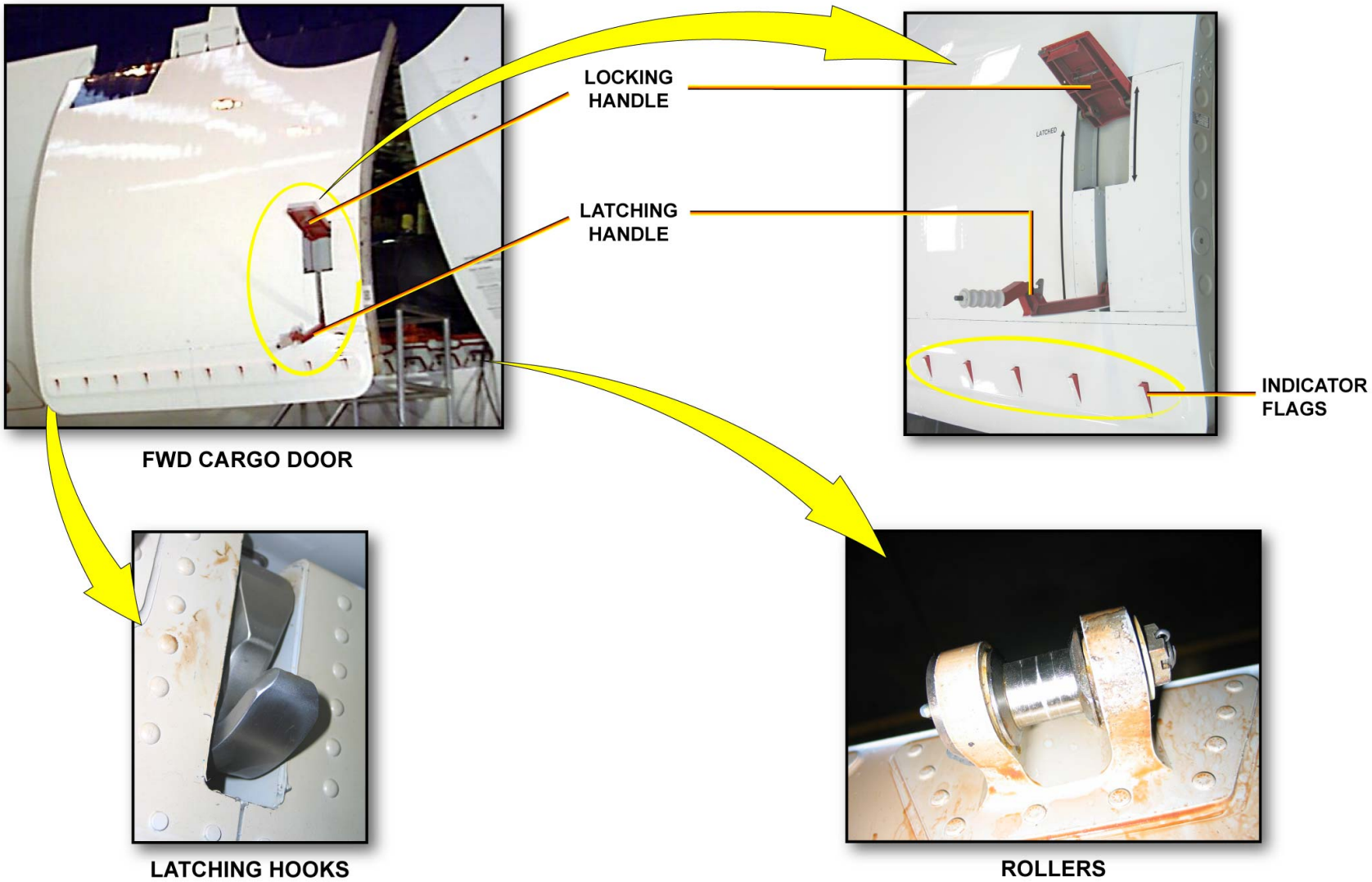

SYSTEM OVERVIEW - CARGO DOORS LOCKING AND LATCHING

G7508471 - G3NT1T0 - FM52B1000000001

DOORS LINE MAINTENANCE BRIEFING (2)

SYSTEM OVERVIEW (continued)

CARGO DOORS HYDRAULIC OPERATION

The FWD and aft cargo doors open outwards and upwards from the fuselage and are manually locked/unlocked and hydraulically operated.
The door system comprises:
- a cargo door selector to select the opening or closing of the door,
- a green indicator light to indicate that the door is fully open and locked,
- a hydraulic actuator to open and close the door and to lock it mechanically when the door is fully open,
- a locking handle to lock the door when the door is fully closed,
- a latching handle to control latching/unlatching of the door in the fuselage,
- 10 indicator flags to indicate the correct locking of the door.

The cargo compartment door hydraulic system controls the operation of the FWD and aft cargo-compartment doors. The hydraulic system of each door has a hydraulic actuator and a manual selector valve.
The yellow auxiliary hydraulic system supplies the doors with hydraulic pressure. For normal operation the yellow electric pump is used. In the case of electric pump failure or no electric power on the A/C a hand pump can be used. Normal operation is done by a single operator; two operators are needed for manual operation. Turning the manual selector lever to open or close is necessary in both operating modes. Turning the manual selector lever and the normal system available will start up the electric pump and the door will move.

G7508471 - G3NT1T0 - FM52B1000000001

FWD CARGO DOOR

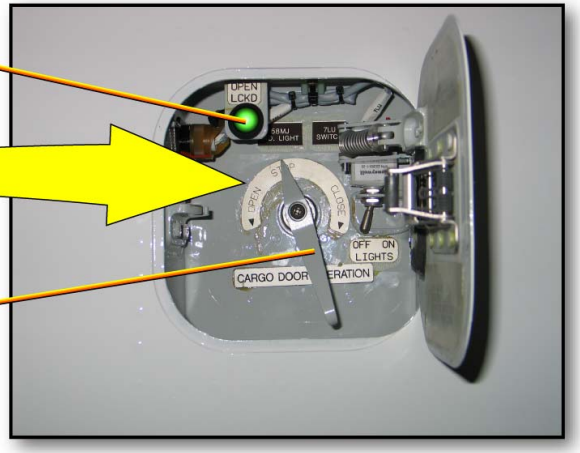

CARGO DOOR OPERATION SERVICE PANEL

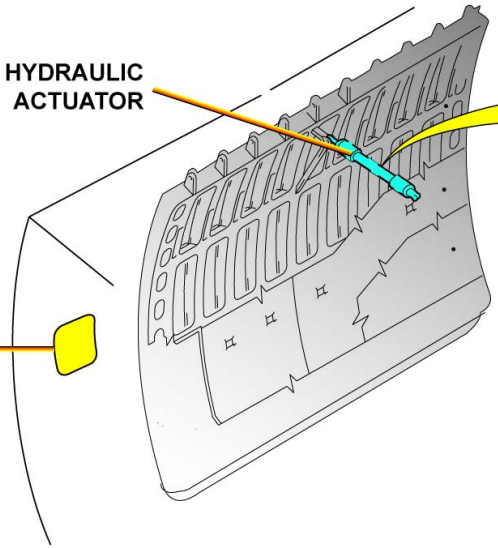

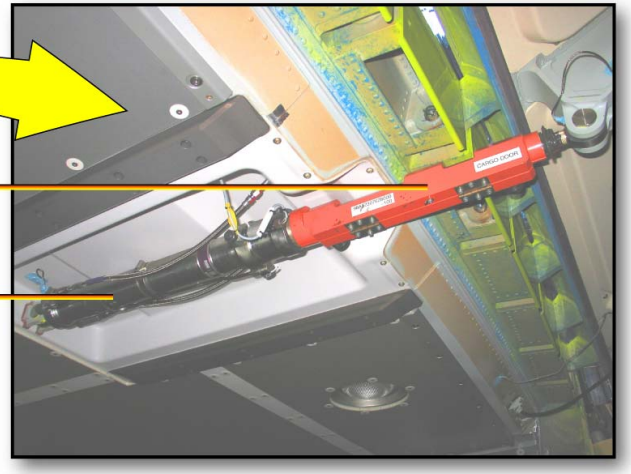

SYSTEM OVERVIEW - CARGO DOORS HYDRAULIC OPERATION

G7508471 - G3NT1T0 - FM52B1000000001

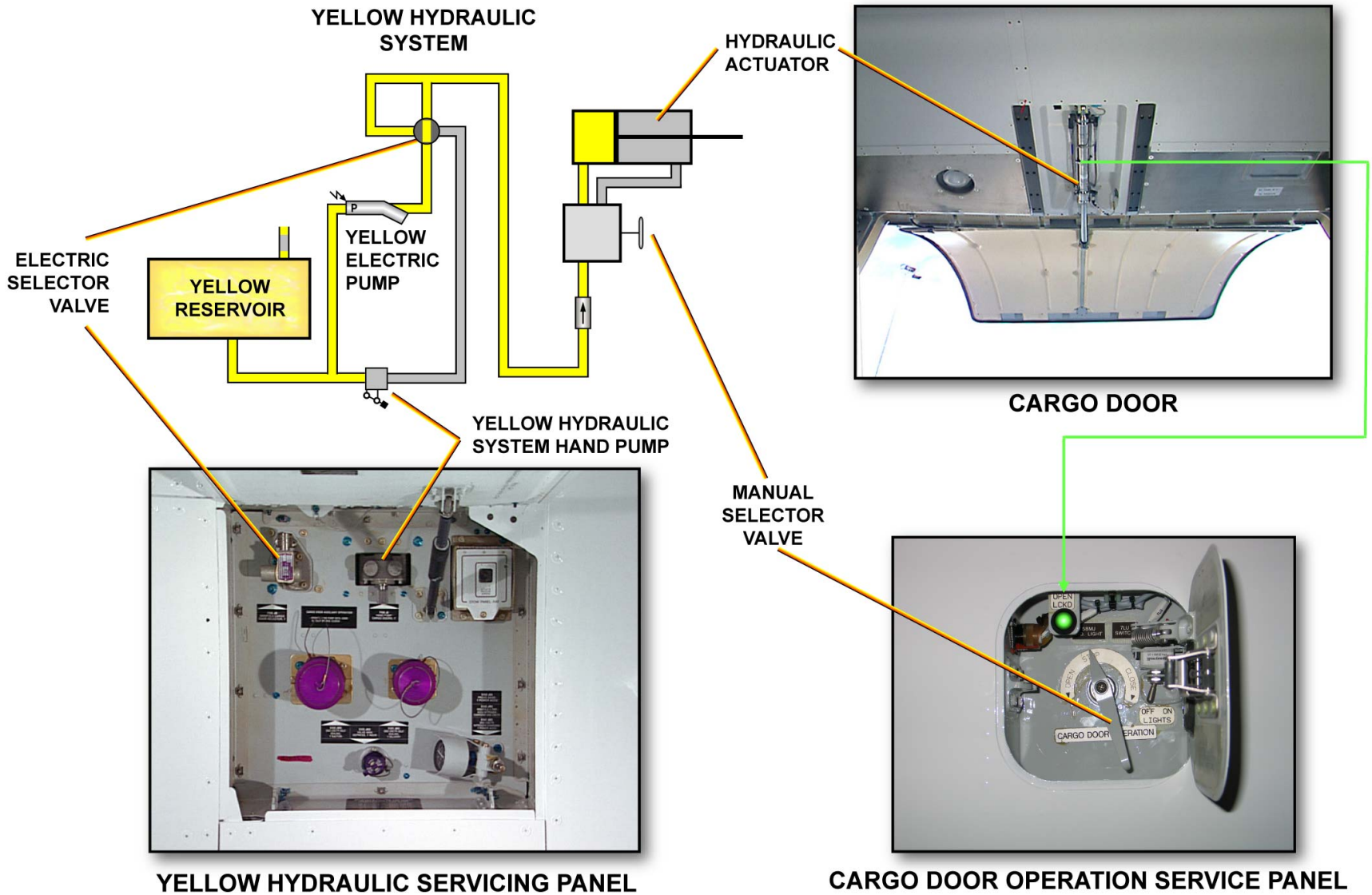

SYSTEM OVERVIEW - CARGO DOORS HYDRAULIC OPERATION

This Page Intentionally Left Blank

G7508471 - G3NT1T0 - FM52B1000000001

DOORS LINE MAINTENANCE BRIEFING (2)

SYSTEM OVERVIEW (continued)

BULK CARGO DOOR LOCKING AND LATCHING

The bulk cargo door has an Inner and an outer handle, which operate the locking mechanism. There is a barrel lock installed at each end of the locking shaft to lock the door in the fuselage. A balance mechanism reduces the force, which is necessary to open the door. There is a latch assembly, which holds it in the fully open position. The locking system operates also the latching hook. To lock the latching hook in the latch arrester it is necessary to put the door control handles to the closed position.

G7508471 - G3NT1T0 - FM52B1000000001

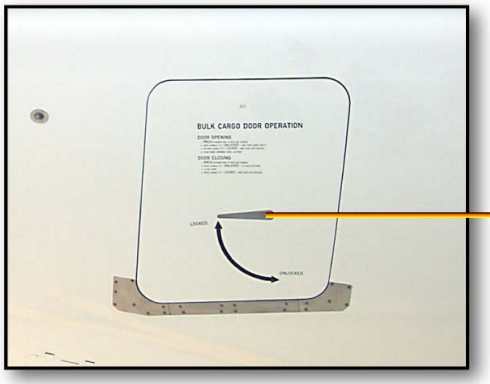

BULK CARGO FROM THE OUTSIDE

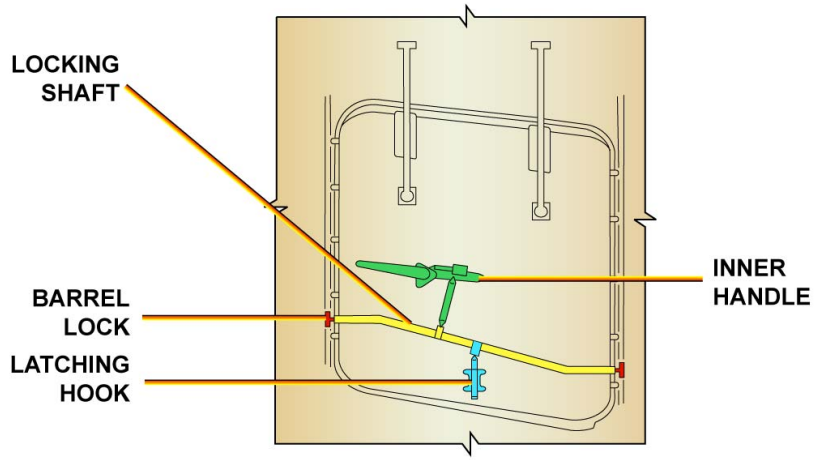

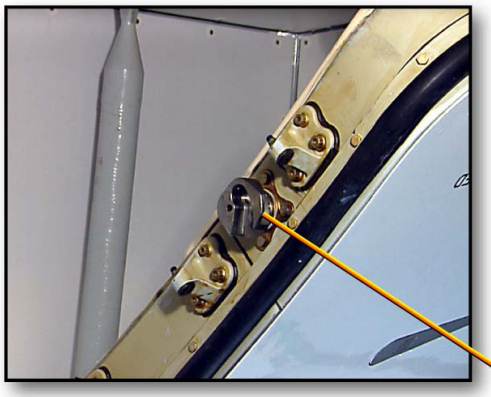

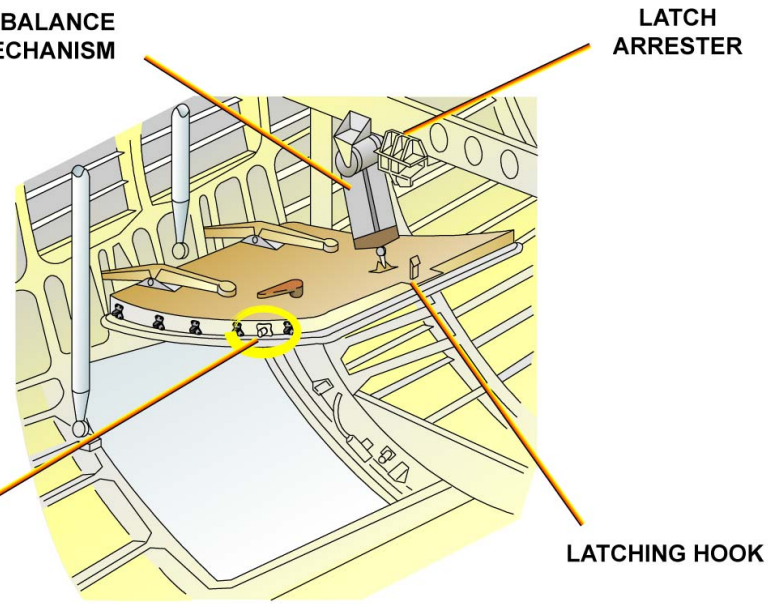

SYSTEM OVERVIEW - BULK CARGO DOOR LOCKING AND LATCHING

DOORS LINE MAINTENANCE BRIEFING (2)

SYSTEM OVERVIEW (continued)

AVIONICS COMPARTMENT DOORS BOTTOM FUSELAGE

The avionics compartment door is installed in the FWD bottom part of the fuselage in the pressured area of the aircraft. The door indicating and warning system sends a signal to the ECAM DOOR/OXY page, which indicates the state of the avionics access door. The avionics compartment door gives access to the aircraft through an extendable ladder. The door can be opened from the outside or from the inside of the fuselage with outer and inner handles. A compensating mechanism reduces the force that is necessary to operate the door.

G7508471 - G3NT1T0 - FM52B1000000001

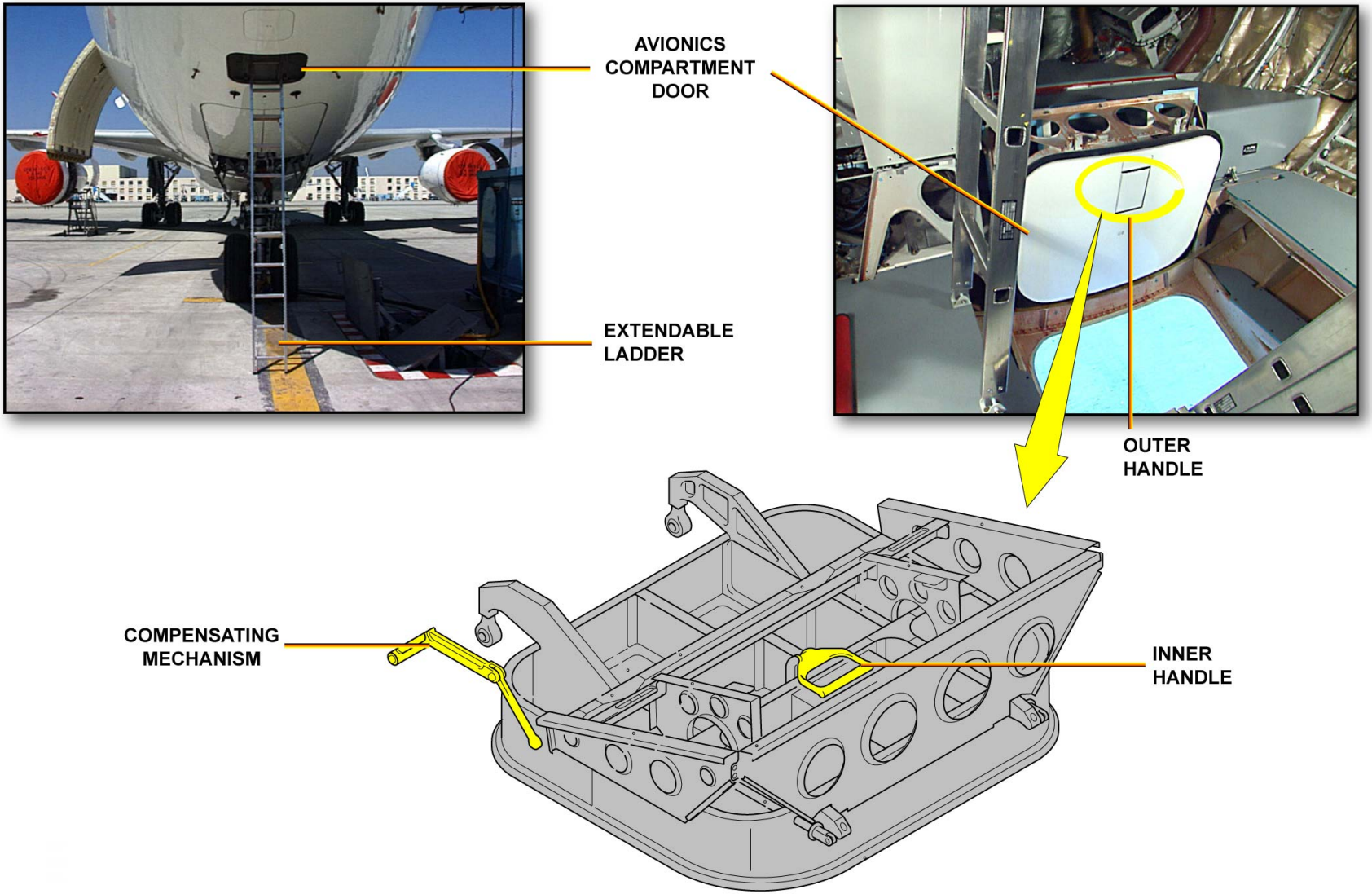

SYSTEM OVERVIEW - AVIONICS COMPARTMENT DOORS BOTTOM FUSELAGE

DOORS LINE MAINTENANCE BRIEFING (2)

SYSTEM OVERVIEW (continued)

AVIONICS COMPARTMENT DOORS COCKPIT

The cockpit floor door gives access to the avionics compartment from the cockpit. It is located between the rear of the captain seat and the cockpit door. It can be opened from both sides and an attached ladder is used to go down into the avionics compartment.

G7508471 - G3NT1T0 - FM52B1000000001

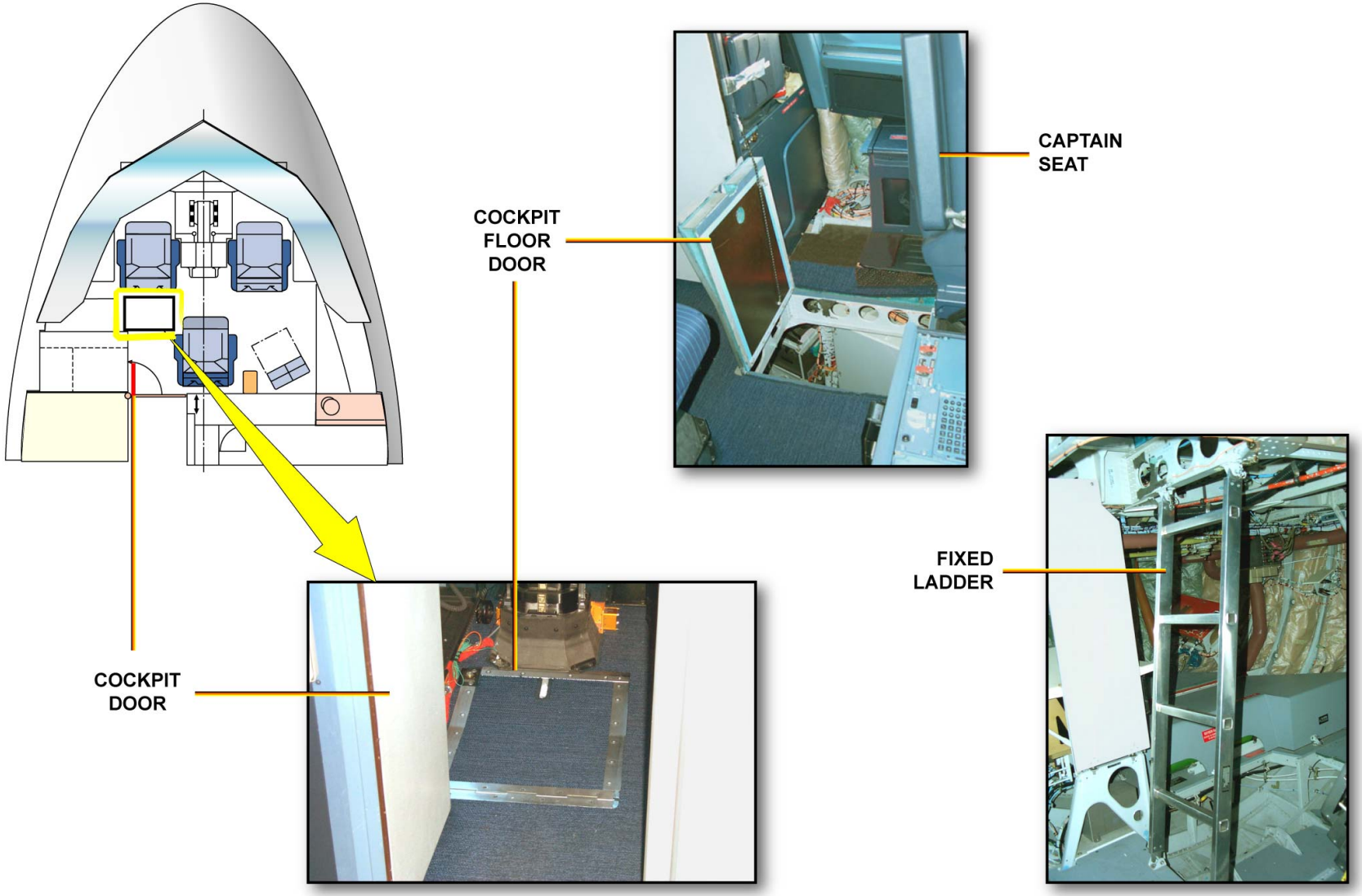

SYSTEM OVERVIEW - AVIONICS COMPARTMENT DOORS COCKPIT

G7508471 - G3NT1T0 - FM52B1000000001

DOORS LINE MAINTENANCE BRIEFING (2)

SYSTEM OVERVIEW (continued)

COCKPIT DOOR

The cockpit door separates the cockpit from the cabin. It is an armored and bulletproof door made to prevent a hijacking attempt and protect the flight compartment against an intrusion. A Cockpit Door Locking System (CDLS) controls its electrical release and prevents an unwanted access into the cockpit. The door also has a door escape hatch with a pneumatically operated decompression panel, which opens the hatch when there is a rapid decompression between the cockpit and the cabin.

G7508471 - G3NT1T0 - FM52B1000000001

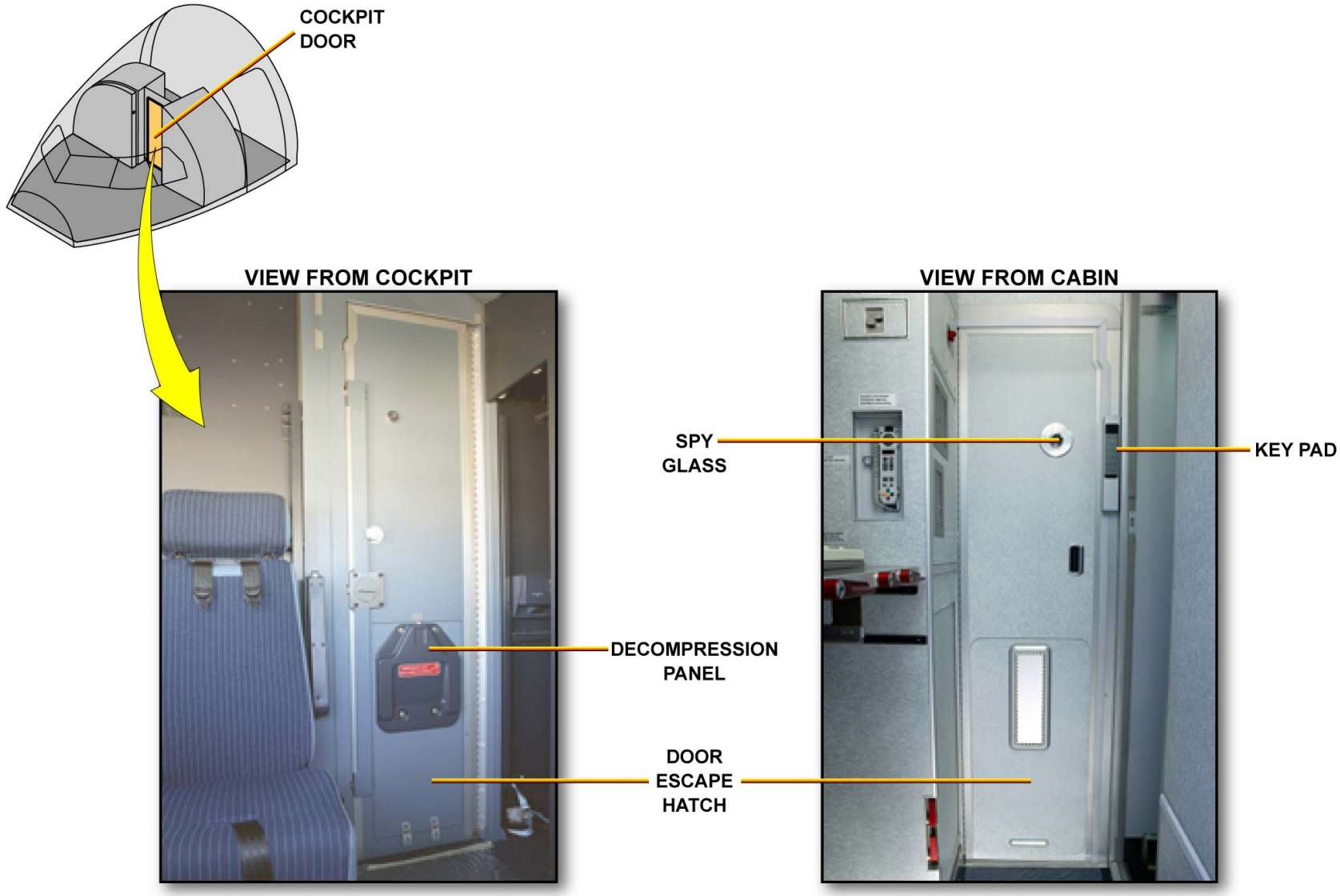

SYSTEM OVERVIEW - COCKPIT DOOR

DOORS LINE MAINTENANCE BRIEFING (2)

SYSTEM OVERVIEW (continued)

COCKPIT DOOR LOCK SYSTEM (CDLS)

The CDLS is an electrically operating system for the lock and unlock of the cockpit door.
This system is mainly composed of:
- a control unit and its CocKPiT DOOR CONTrol panel, located on the left-hand side of the overhead panel and a control unit, identical to the first one, and its CKPT DOOR CONT panel, located on the right-hand side of the overhead panel,
- the CKPT DOOR panel on the center pedestal with a toggle switch to control the cockpit door and a fault indicator,

NOTE: The CKPT DOOR panel can be equipped in option with a CAB ALERT guarded P/B, which alert CKPT crew in case of hijacking/vandalism in cabin.

- an additional CKPT DOOR BacK-UP panel, which is composed of a LocKinG SYStem SW and a OPEN/FAULT ConTroL P/B,
- the buzzer on the overhead panel,
- the keypad in the cabin for cockpit access authorization,
- three electrical release strikes,
- an additional CKPT DOOR BacK-UP panel, which is composed of a LocKinG SYStem switch and a OPEN/FAULT ConTroL P/B

NOTE: The door is always locked when closed and the aircraft is powered during maintenance activity there is a magnetic door stop to keep the door fully open.

G7508471 - G3NT1T0 - FM52B1000000001

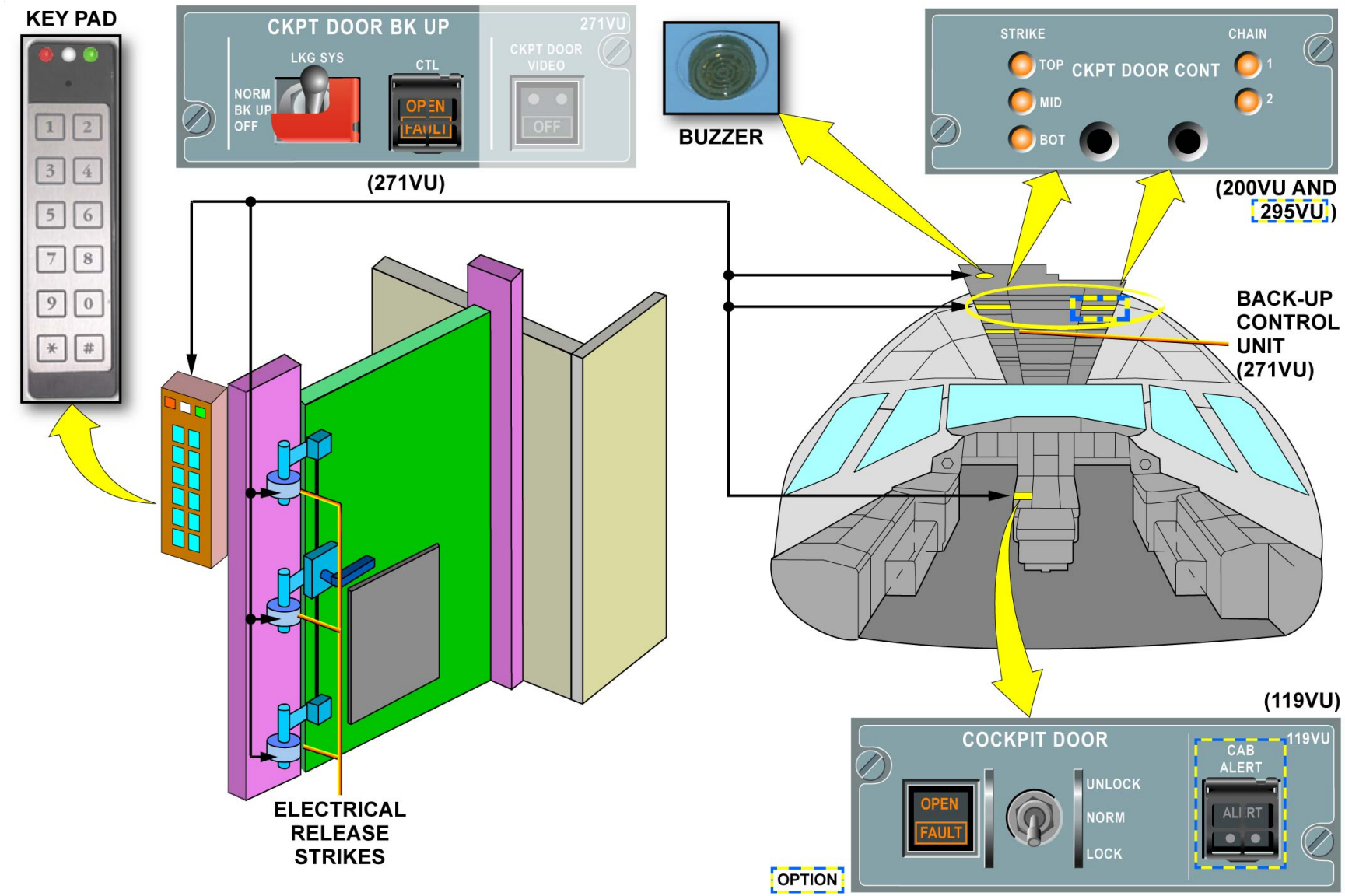

SYSTEM OVERVIEW - COCKPIT DOOR LOCK SYSTEM (CDLS)

G7508471 - G3NT1T0 - FM52B1000000001

DOORS LINE MAINTENANCE BRIEFING (2)

SYSTEM OVERVIEW (continued)

DSCS

The Door and escape Slides Control System (DSCS) gives electrical indications related to the condition of the doors. The DSCS has:
- proximity switches,
- a compensation panel (5062VE)
- a Proximity Switch Control Unit (PSCU),
- an Autonomous Standby Power Supply Unit (ASPSU),
- a pressure switch.

The primary functions of the DSCS are to control:
- door indicating and warning,
- escape slide indicating and warning,
- the residual cabin and cargo compartment pressure detection and indicating,
- cargo doors electrical control and indicating.

On the ground, with one engine running, the DSCS prevents the pressurization of the A/C if:
- a door is not fully closed and locked,
- a sensor is defective.

If a proximity sensor fails during the flight, the aircraft will stay pressurized.

The compensation panel has one compensation sensor with a fixed target. This fixed target can be used to give a manual override function for a failed door closed proximity sensor to get the dispatch of the A/C using the Minimum Equipment List (MEL) procedure.

G7508471 - G3NT1T0 - FM52B1000000001

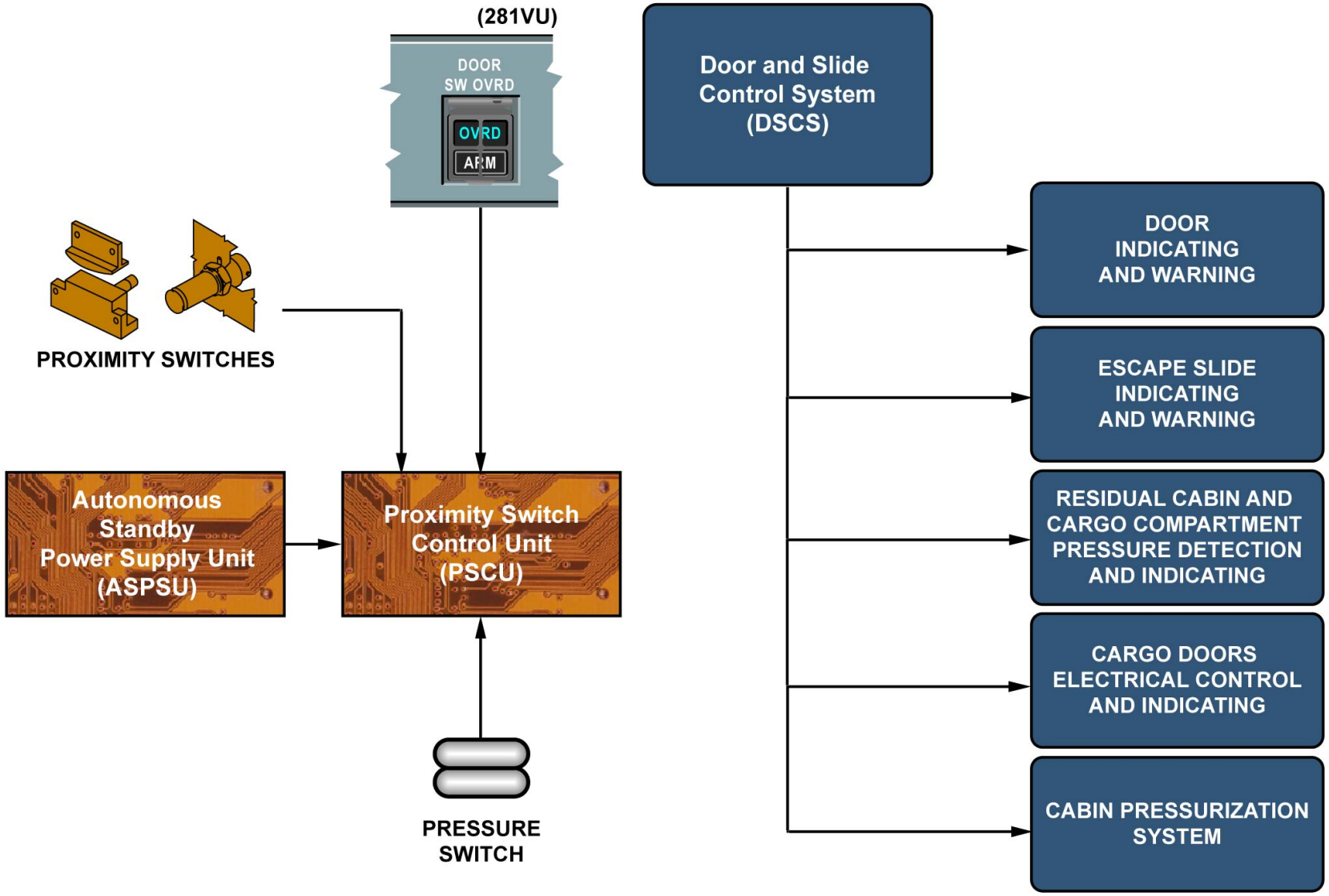

SYSTEM OVERVIEW - DSCS

G7508471 - G3NT1T0 - FM52B1000000001

DOORS LINE MAINTENANCE BRIEFING (2)

SYSTEM OVERVIEW (continued)

MAINTENANCE/TEST FACILITIES

The DSCS can be tested via the MCDU SYSTEM REPORT/TEST pages. The PSCU has a BITE. The BITE is used for the in-flight monitoring, on ground trouble shooting and continuous self-testing. All fault data are transmitted through ARINC 429 buses to the Central Maintenance Computers (CMCs).
Their functions are to:
- find and indicate faults,
- identify defective electrical components which are Line Replaceable Units (LRU) for maintenance and trouble-shooting,
- identify defective components that are Shop Replaceable Units (SRU).

The ASPSU also has a BITE used for system test and a battery capacity test. For these tests, the ASPSU has a test panel with two P/Bs and a Light Emitting Diode (LED) display.

G7508471 - G3NT1T0 - FM52B1000000001

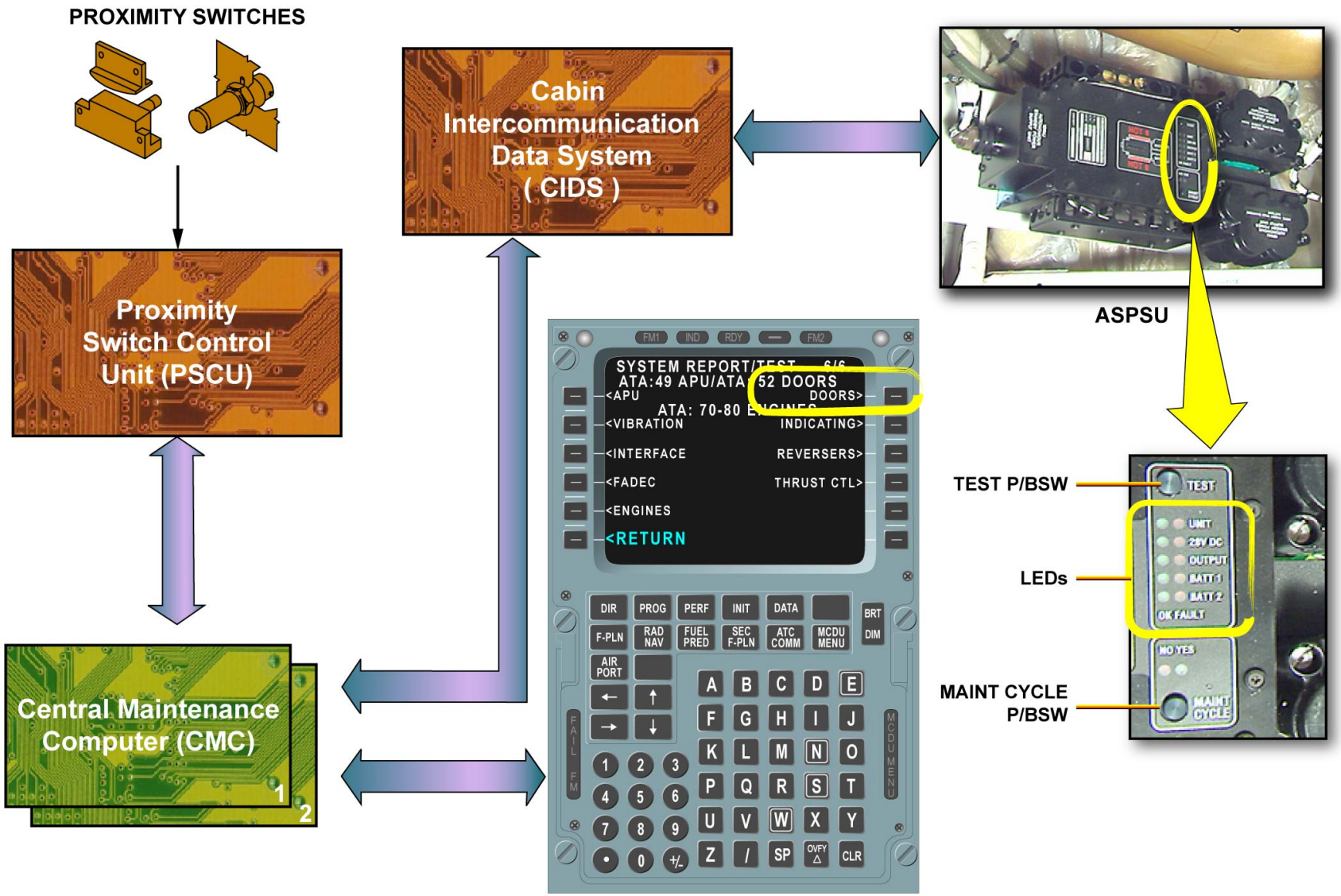

SYSTEM OVERVIEW - MAINTENANCE/TEST FACILITIES

G7508471 - G3NT1T0 - FM52B100000001

DOORS LINE MAINTENANCE BRIEFING (2)

SERVICING

INSPECTION CHECK OF THE DAMPER AND EMERGENCY-OPERATION CYLINDER OF THE FWD, MID AND AFT PASSENGER DOORS

The AMM procedure is the same for all passenger/crew doors. Take the special precautions before you start working on the door and put in the safety pins.
Carry out a visual inspection of the door-damper and emergency-operation cylinder. Check for fluid leak, corrosion, cracks or damage on the components. Make sure these components are correctly attached.
The pressure is correct if the pointer is in the green zone. To make sure that you get an accurate reading, let the air bottle stabilize at the ambient temperature.
If the pressure is not correct, charge the cylinder bottle as necessary.
The task has been completed.

INSPECTION CHECK OF THE DAMPER AND EMERGENCY-OPERATION CYLINDER OF THE FWD, MID AND AFT PASSENGER DOORS

Do the special precautions before you start working on the door.

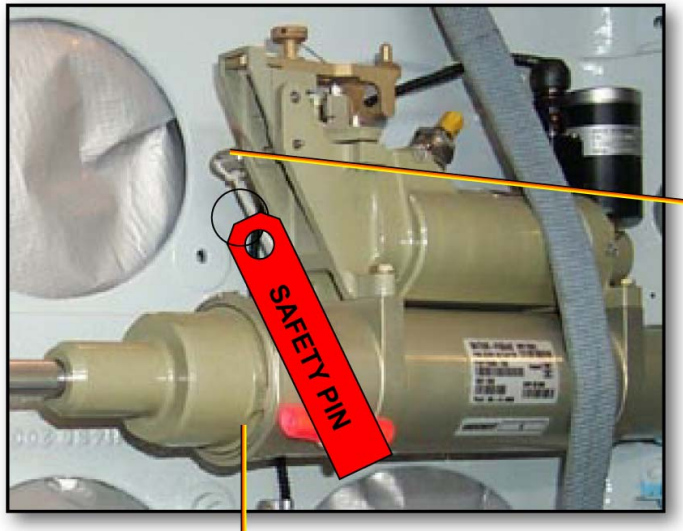

SERVICING - INSPECTION CHECK OF THE DAMPER AND EMERGENCY-OPERATION CYLINDER OF THE FWD, MID AND AFT PASSENGER DOORS

INSPECTION CHECK OF THE DAMPER AND EMERGENCY-OPERATION CYLINDER OF THE FWD, MID AND AFT PASSENGER DOORS

Do a visual inspection of the door-damper and emergency-operation cylinder. Make sure that there are no fluid leakage, corrosion, cracks, marks or dents and that the components are correctly attached.
Do a visual inspection of the paint. Make sure that the paint is not flaked or peeled.

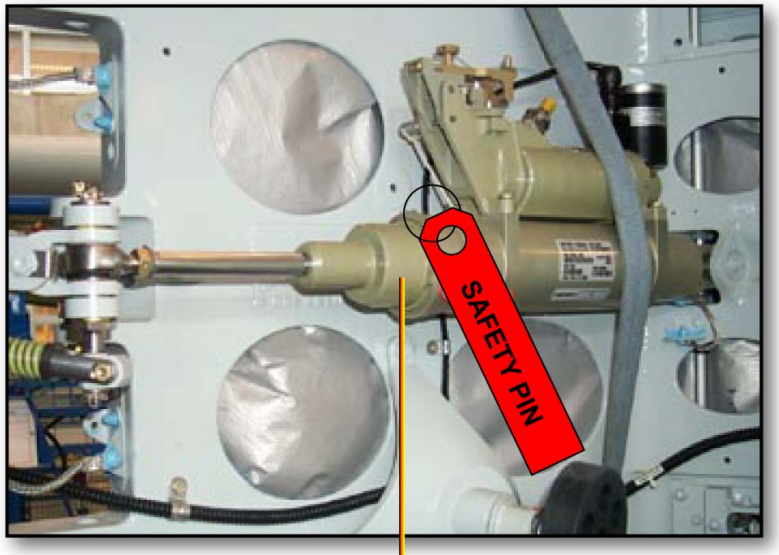

DAMPER AND EMERGENCY-OPERATION CYLINDER

SERVICING - INSPECTION CHECK OF THE DAMPER AND EMERGENCY-OPERATION CYLINDER OF THE FWD, MID AND AFT PASSENGER DOORS

INSPECTION CHECK OF THE DAMPER AND EMERGENCY-OPERATION CYLINDER OF THE FWD, MID AND AFT PASSENGER DOORS

Check of the Pressure.

- **Make sure that the pointer in the pressure gauge is in the green zone.**

NOTE: Let the air bottle stabilizes at the ambient temperature before you do the inspection. This is to get the correct pressure value.

NOTE: Bubbles in the pressure gauge with a maximum diameter equal to the dial itself are acceptable.
If the oil level in the pressure gauge is not sufficient to have the pointer in the liquid (with the dial horizontal), you must discard the pressure gage.

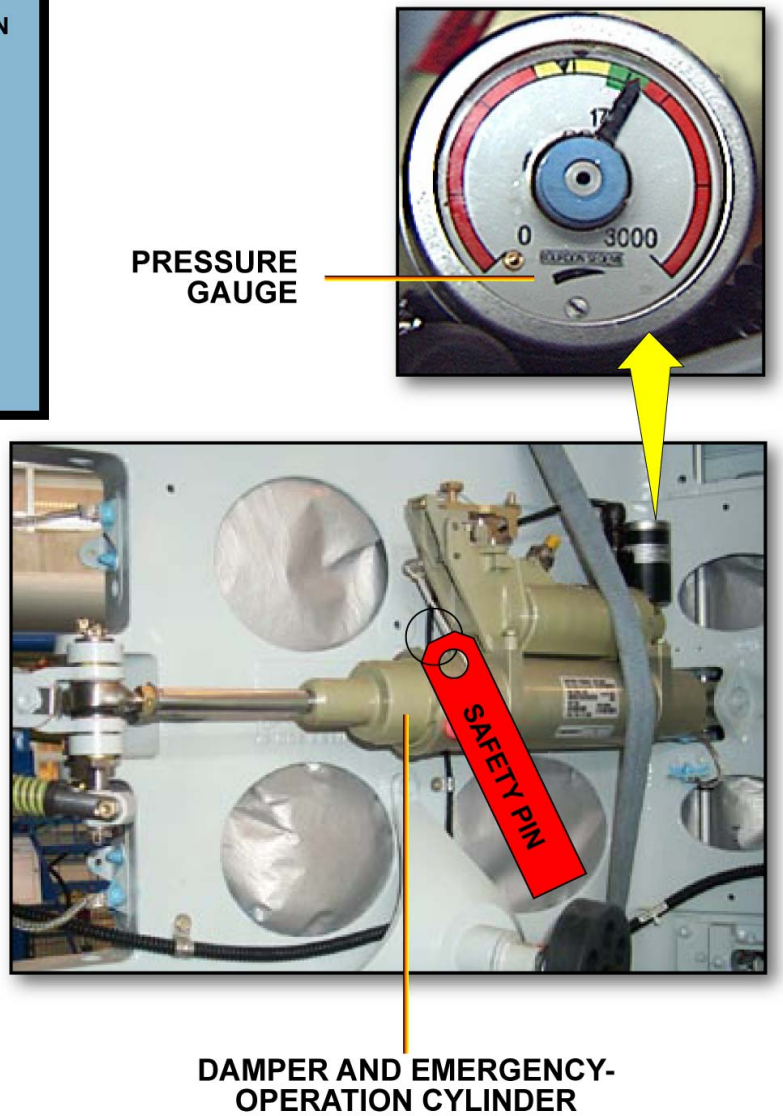

SERVICING - INSPECTION CHECK OF THE DAMPER AND EMERGENCY-OPERATION CYLINDER OF THE FWD, MID AND AFT PASSENGER DOORS

INSPECTION CHECK OF THE DAMPER AND EMERGENCY-OPERATION CYLINDER OF THE FWD, MID AND AFT PASSENGER DOORS

If the pressure is not correct, charge the cylinder bottle.

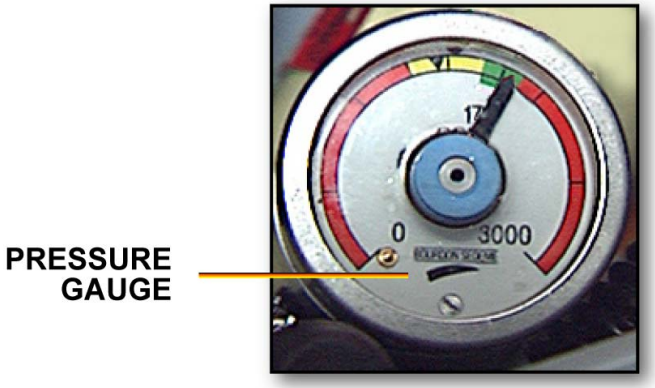

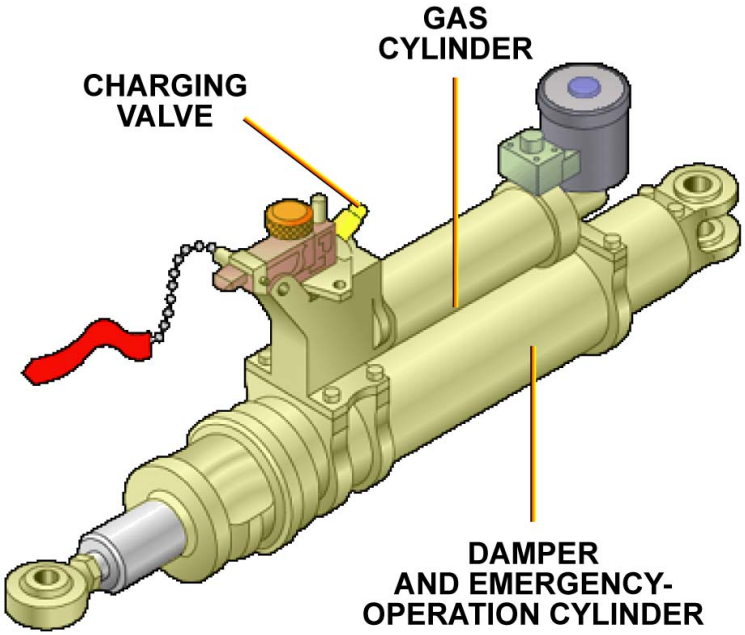

SERVICING - INSPECTION CHECK OF THE DAMPER AND EMERGENCY-OPERATION CYLINDER OF THE FWD, MID AND AFT PASSENGER DOORS

This Page Intentionally Left Blank

G7508471 - G3NT1T0 - FM52B1000000001

DOORS LINE MAINTENANCE BRIEFING (2)

SERVICING (continued)

DISCHARGING/CHARGING OF THE DOOR DAMPER AND EMERGENCY OPERATION CYLINDER

The AMM procedure is similar for all passenger/crew doors. Make sure that the C/Bs 2MJ and 3MJ are opened, safetied and tagged.
To discharge the gas cylinder, remove the blanking cap from the filling valve. Slowly loosen the filling valve nut to release the pressure as required
. Then tighten the filling valve nut to the specified torque value when the pressure gauge shows the correct pressure. At the end, re-install the blanking cap on the filling valve.

NOTE: When the pressure drops to zero, then you can tighten the filling valve nut with your hand.

To charge the gas cylinder, connect a filling system (dry air or nitrogen) with a pressure gauge to the filling valve.
Fill the cylinder with the correct pressure as follows: Slowly open the control valve of the filling system and close it when the pressure gauge shows 55 bars (797.7073 psi).
After three seconds open the control valve again and close it when the pressure gauge shows 83 bars (1203.8129 psi).
Three seconds later open the control valve again and close it when the pressure gauge shows 123 bars (1783.9637 psi) for the A340 and 120 bars (1740.4524 psi) for the A330.

NOTE: The cylinder is correctly pressurized when the pointer of the pressure gauge is in the green area.

Tighten the filling valve nut with your hand. Remove the extension adapter from the filling valve when the pressure is stable. Tighten the filling valve nut to the specified torque value and install the blanking cap. The task has been completed.

G7508471 - G3NT1T0 - FM52B1000000001

DISCHARGING/CHARGING OF THE DOOR DAMPER AND EMERGENCY OPERATION CYLINDER

Open,safety and tag these circuit breakers:

721VU	DOORS &SLIDES CTL	3MJ	N12 (for A340)
721VU	DOORS &SLIDES CTL	3MJ	N12 (for A330)
722VU	DOORS &SLIDES CTL	2MJ	P41

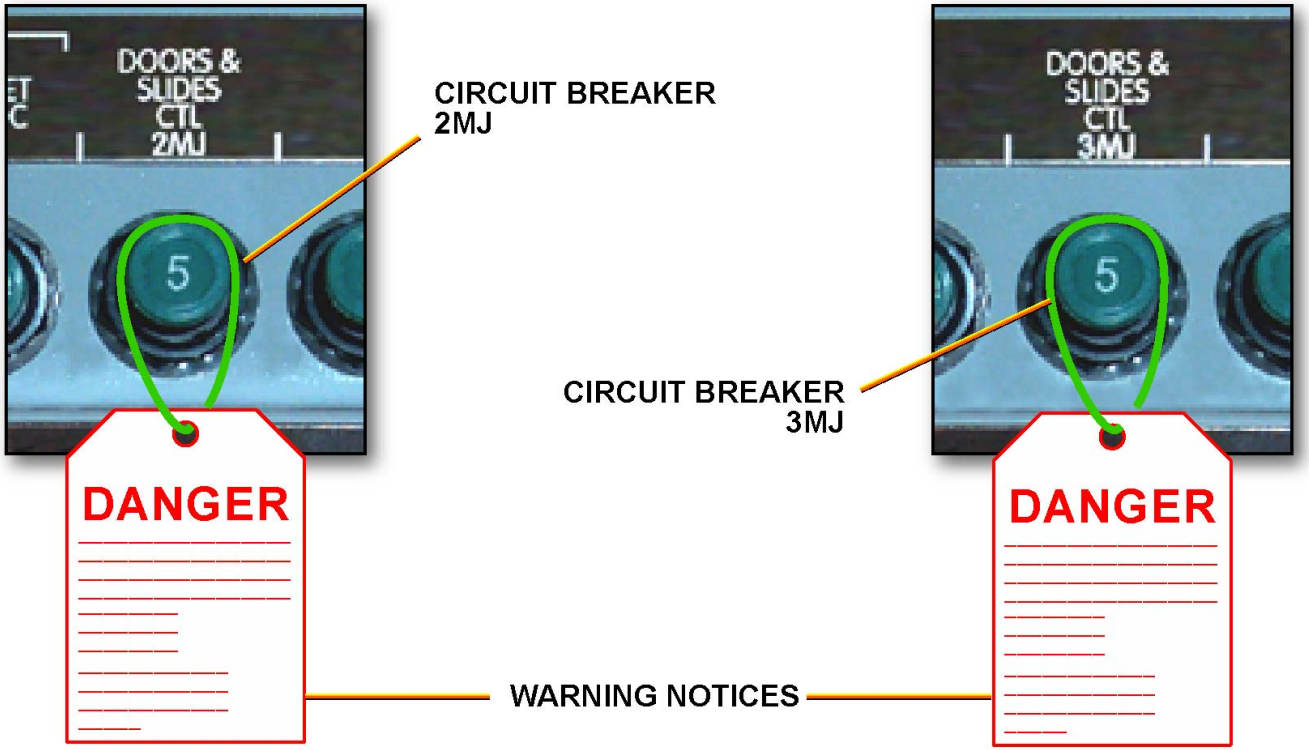

SERVICING - DISCHARGING/CHARGING OF THE DOOR DAMPER AND EMERGENCY OPERATION CYLINDER

DISCHARGING/CHARGING OF THE DOOR DAMPER AND EMERGENCY OPERATION CYLINDER

Discharging of the Cylinder

Remove the blanking cap from the filling valve.
Slowly loosen the filling valve nut to release the pressure as required.

PRESSURE GAUGE
(WRONG PRESSURE: INDICATION IN RED AREA)

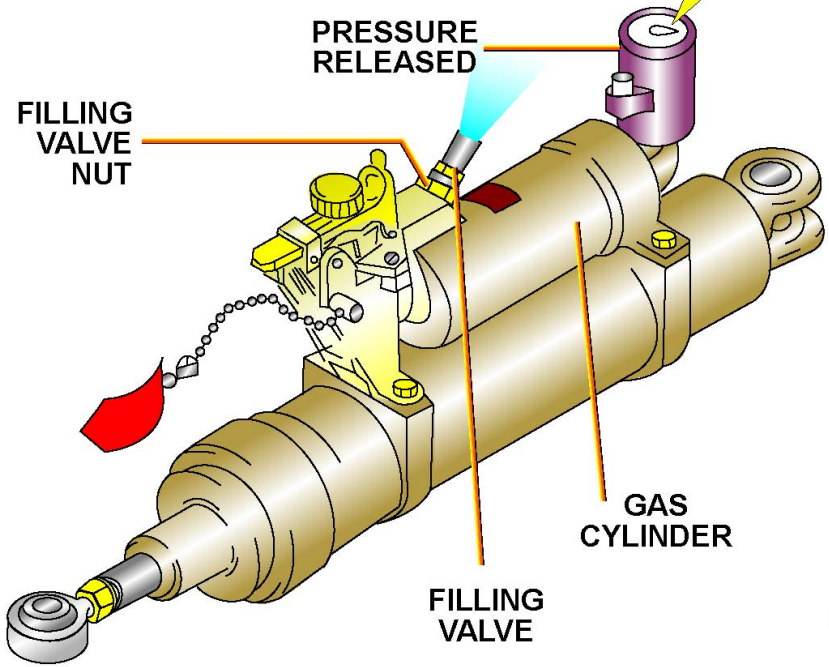

SERVICING - DISCHARGING/CHARGING OF THE DOOR DAMPER AND EMERGENCY OPERATION CYLINDER

DISCHARGING/CHARGING OF THE DOOR DAMPER AND EMERGENCY OPERATION CYLINDER

Discharging of the Cylinder

Tighten the filling valve nut to the specified torque value when the pressure gage shows the correct pressure.
NOTE: When the pressure is decreased to zero, then you can tighten the filling valve nut with your hand.
Install the blanking cap on the filling valve.

PRESSURE GAUGE
(CORRECT PRESSURE: INDICATION IN GREEN AREA)

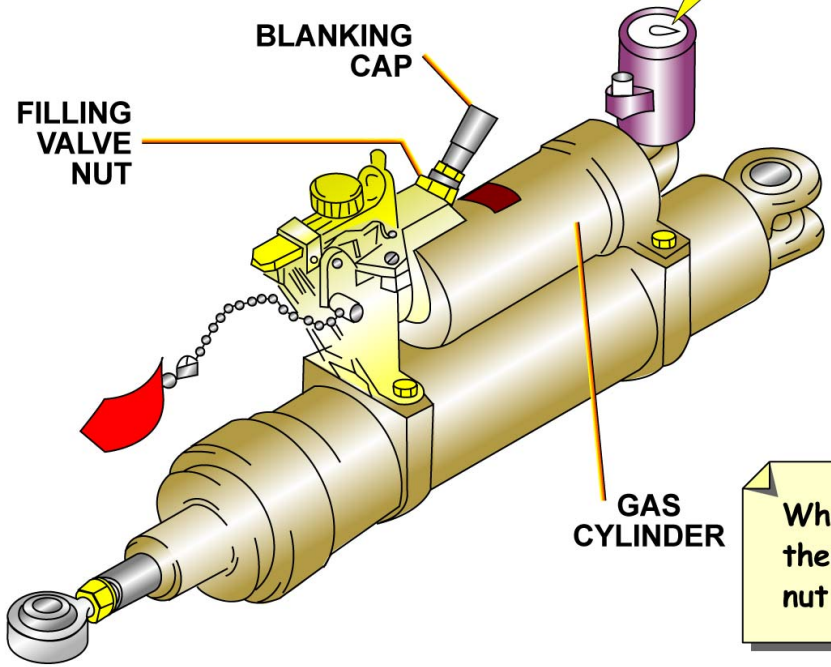

When the pressure drops to zero, then you can tighten the filling valve nut with your hand.

SERVICING - DISCHARGING/CHARGING OF THE DOOR DAMPER AND EMERGENCY OPERATION CYLINDER

DISCHARGING/CHARGING OF THE DOOR DAMPER AND EMERGENCY OPERATION CYLINDER

Charging of the Cylinder

Connect a filling system (Dry air or Nitrogen) with a pressure gauge to the filling valve.

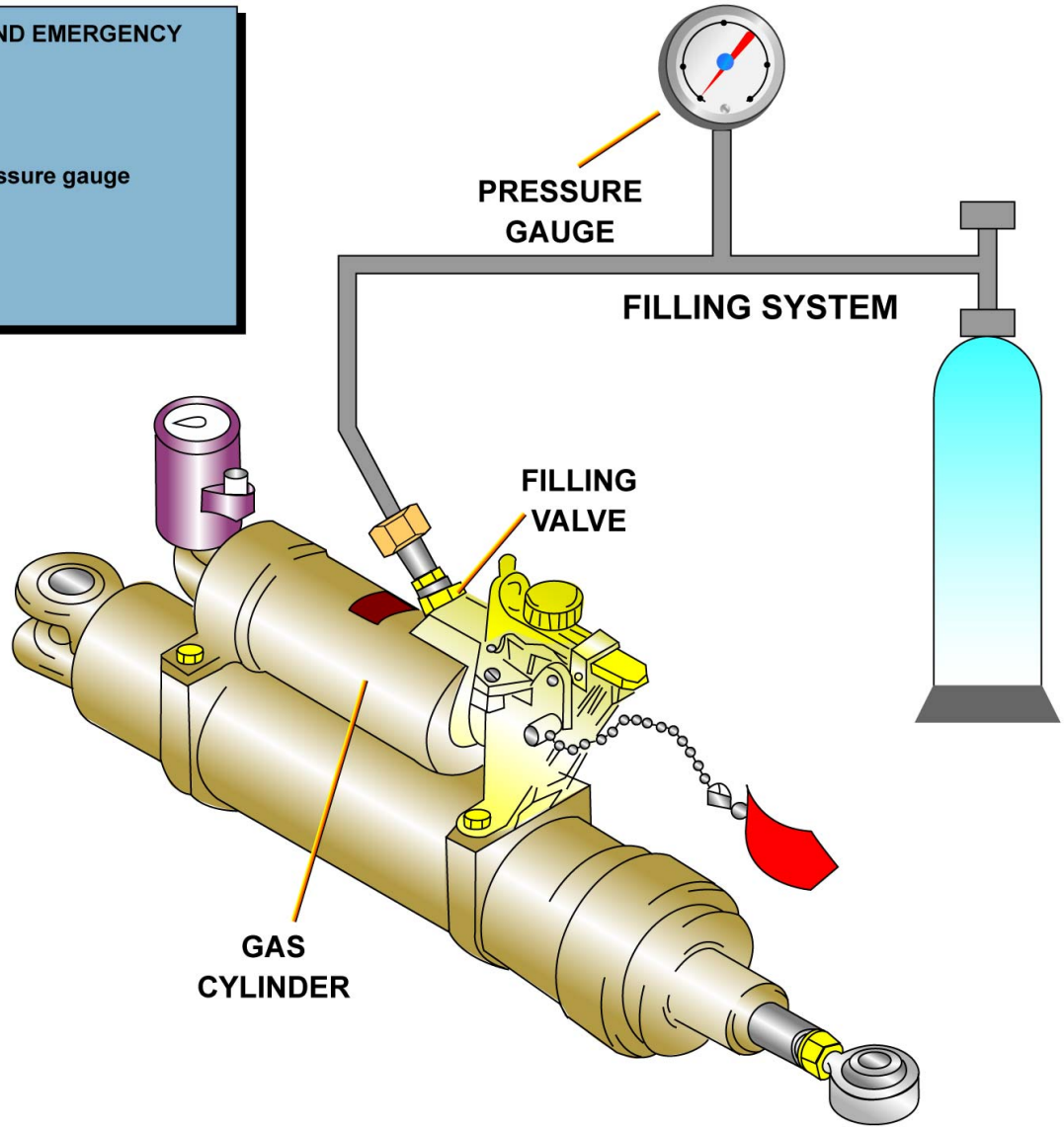

SERVICING - DISCHARGING/CHARGING OF THE DOOR DAMPER AND EMERGENCY OPERATION CYLINDER

G7508471 - G3NT1T0 - FM52B1000000001

DISCHARGING/CHARGING OF THE DOOR DAMPER AND EMERGENCY OPERATION CYLINDER

Charging of the Cylinder

Fill the cylinder with the correct pressure as follows:
Slowly open the control valve of the filling system and close it when the pressure gauge shows 55 bars (797.7073 psi).

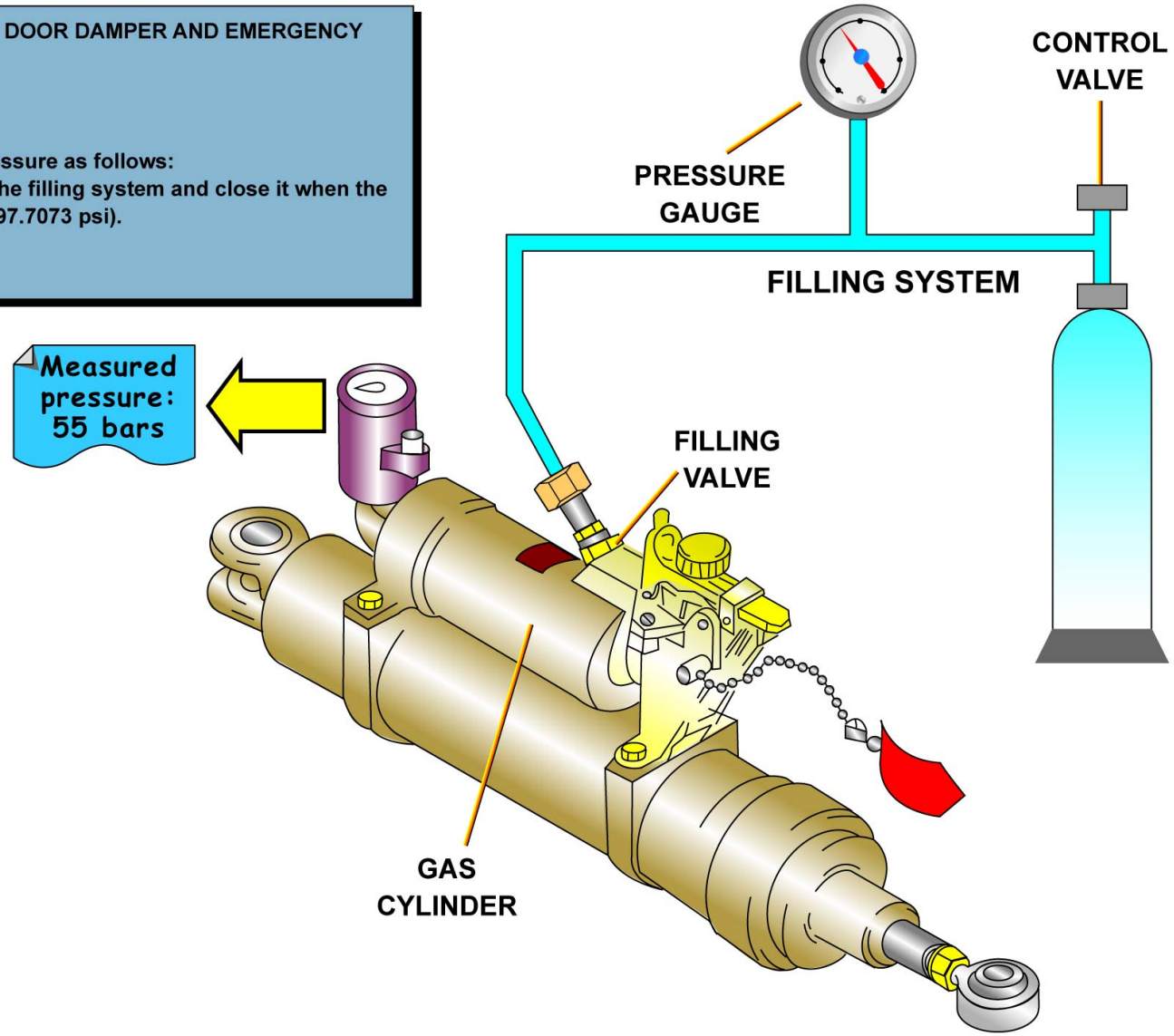

SERVICING - DISCHARGING/CHARGING OF THE DOOR DAMPER AND EMERGENCY OPERATION CYLINDER

DISCHARGING/CHARGING OF THE DOOR DAMPER AND EMERGENCY OPERATION CYLINDER

Charging of the Cylinder

After 3 seconds open the control valve again and close it when the pressure gauge shows 83 bars (1203.8129 psi).

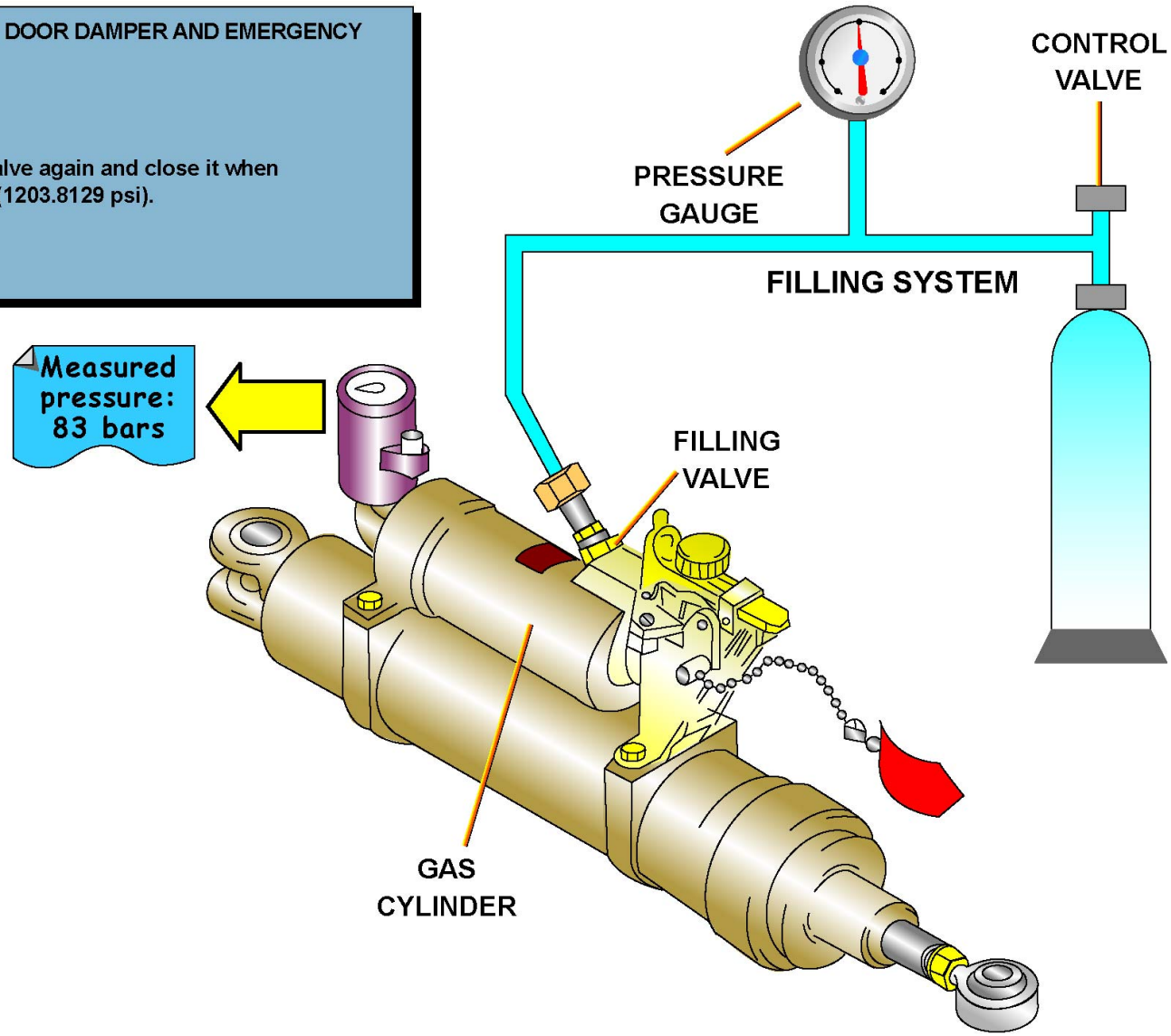

SERVICING - DISCHARGING/CHARGING OF THE DOOR DAMPER AND EMERGENCY OPERATION CYLINDER

DISCHARGING/CHARGING OF THE DOOR DAMPER AND EMERGENCY OPERATION CYLINDER

Charging of the Cylinder

After 3 more seconds open the control valve again and close it when the pressure gauge shows 123 bars (1783.9637 psi) for the A340 and 120 bars (1740.4524 psi) for the A330.
NOTE: The cylinder is correctly pressurized when the pointer of the pressure gauge is in the green area.

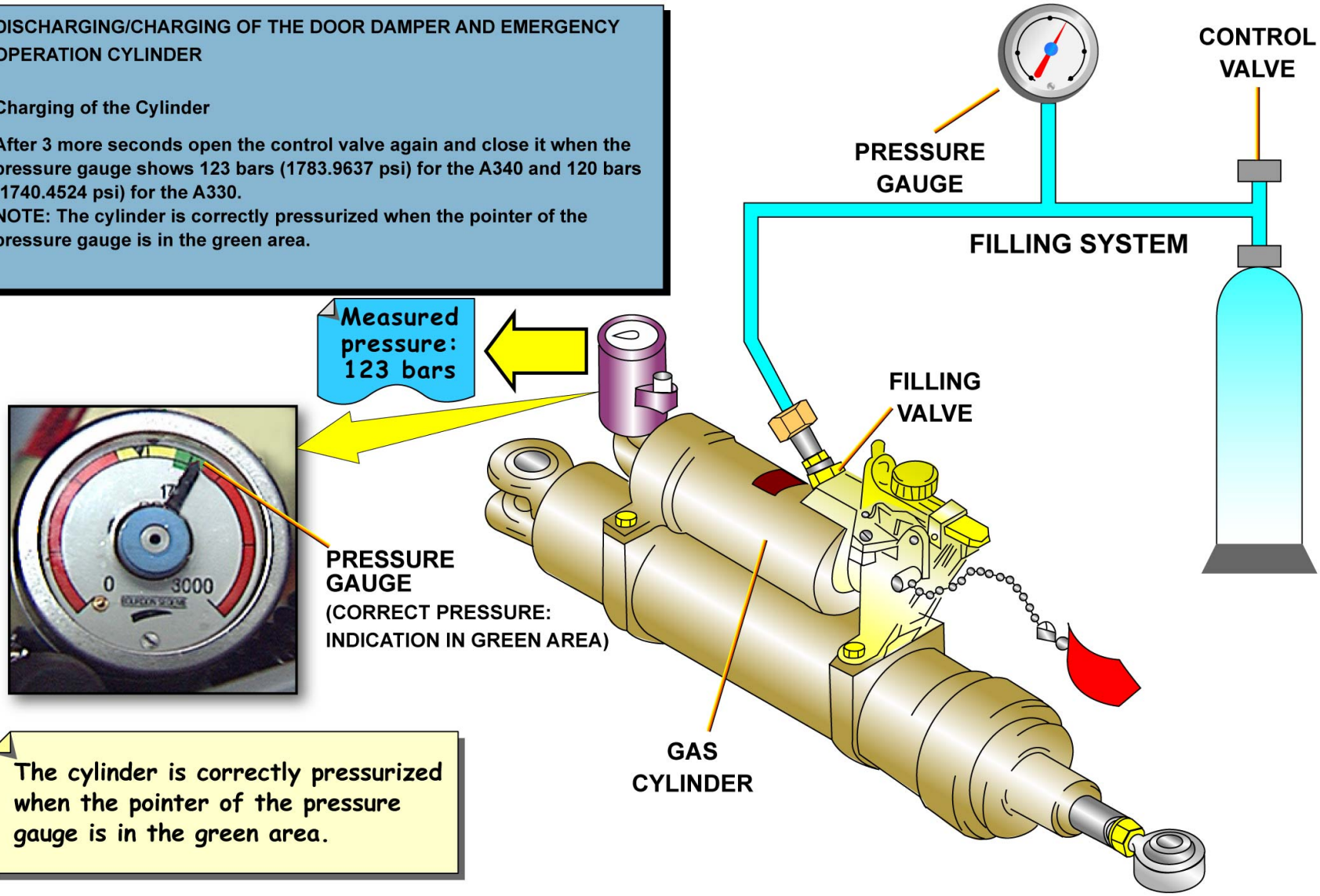

The cylinder is correctly pressurized when the pointer of the pressure gauge is in the green area.

SERVICING - DISCHARGING/CHARGING OF THE DOOR DAMPER AND EMERGENCY OPERATION CYLINDER

DISCHARGING/CHARGING OF THE DOOR DAMPER AND EMERGENCY OPERATION CYLINDER

Remove the extension adapter from the filling valve when the pressure is stable. Tighten the filling valve nut to the specified torque value.

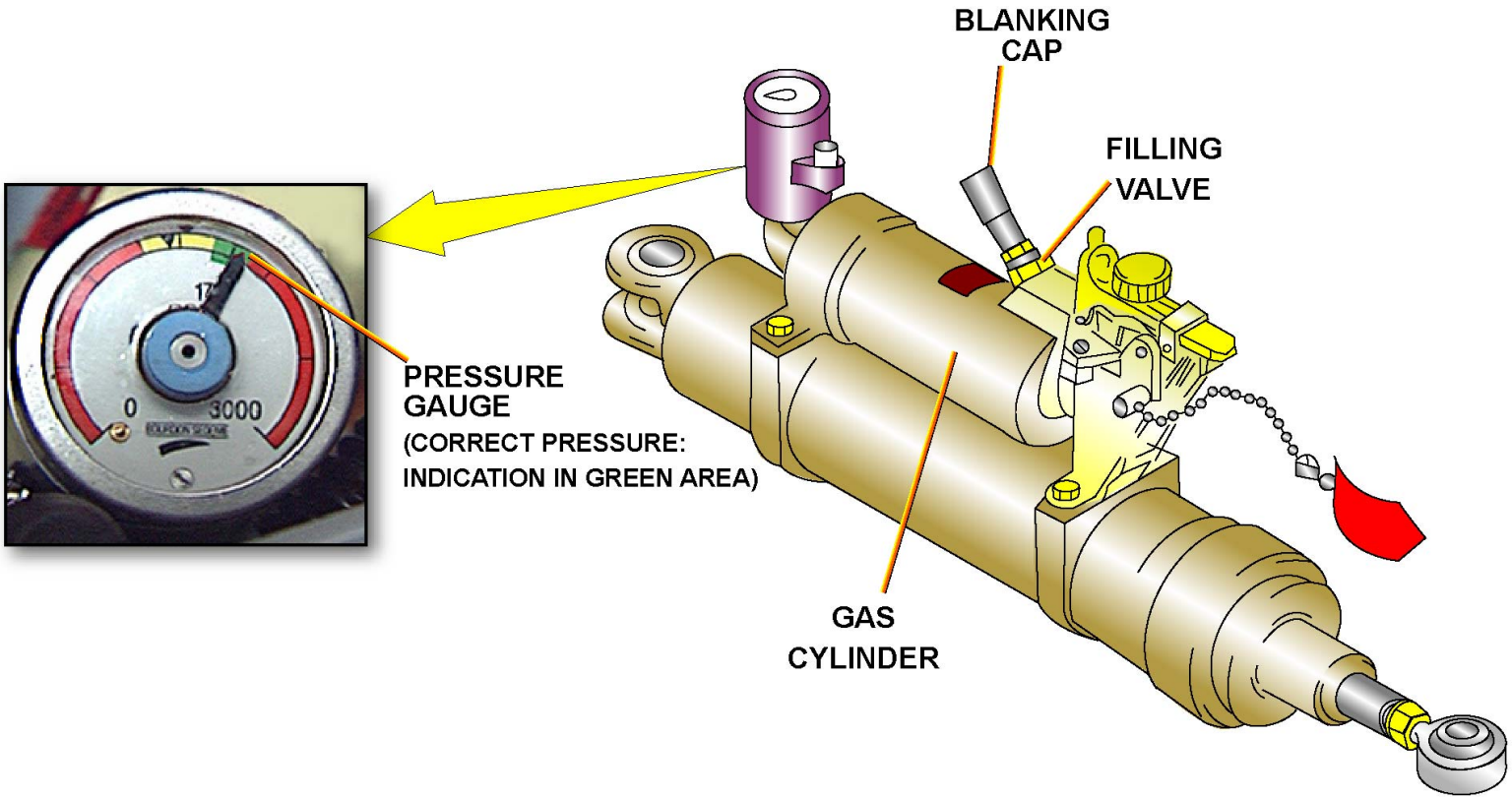

SERVICING - DISCHARGING/CHARGING OF THE DOOR DAMPER AND EMERGENCY OPERATION CYLINDER

This Page Intentionally Left Blank

G7508471 - G3NT1T0 - FM52B1000000001

DOORS LINE MAINTENANCE BRIEFING (2)

MAINTENANCE TIPS

DOORS SAFETY

WARNING: DO NOT OPEN THE PASSENGER/CREW DOORS WHILE THE RED WARNING LIGHT FLASHES. IF THE RED WARNING LIGHT FLASHES, REMAINING PRESSURE COULD CAUSE DOOR TO OPEN SUDDENLY AND COULD KILL OR CAUSE SERIOUS INJURY TO PERSONS, AND CAUSE DAMAGE TO THE A/C.

CAUTION: DO NOT OPEN THE DOOR IF THE WIND SPEED IS MORE THAN 40 KNOTS TO PREVENT DAMAGE TO THE DOOR OR TO THE A/C STRUCTURE. IF THE A/C IS PUT INTO THE WIND THE MAXIMUM WIND SPEED CAN BE 50 KNOTS.

WARNING: MAKE SURE THE DOOR SLIDE SYSTEM LEVER IS IN THE DISARMED POSITION, AND THE SAFETY PIN IS INSTALLED.

After door opening, make sure the percussion lever of the door-damper cylinder is in the disarmed position with the safety pin installed to make sure that the door does not open suddenly. If the door opens suddenly it can cause injury and/or damage.

G7508471 - G3NT1T0 - FM52B1000000001

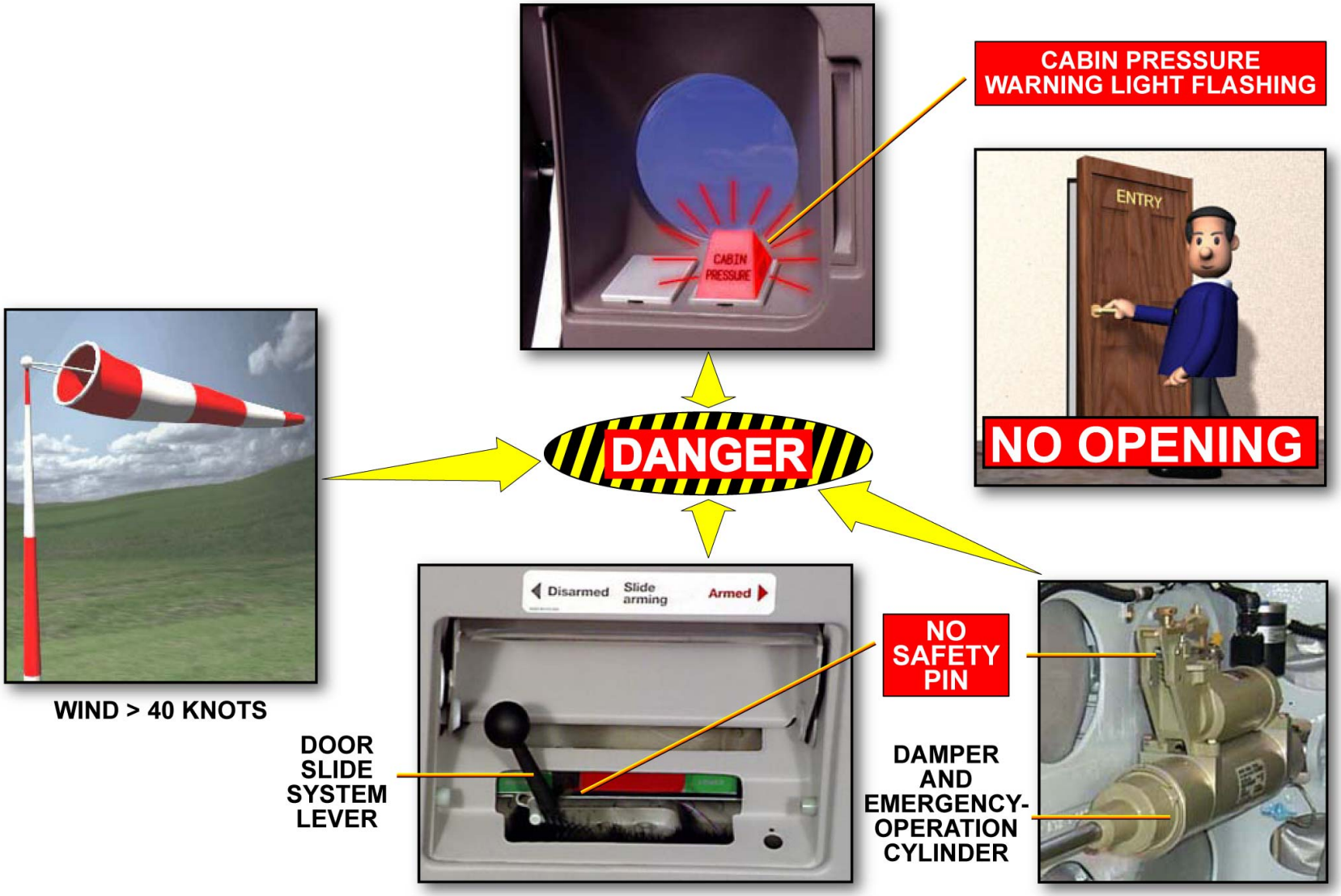

MAINTENANCE TIPS - DOORS SAFETY

DOORS LINE MAINTENANCE BRIEFING (2)

MEL/DEACTIVATION

CDLS WITH NO BACK UP SYSTEM INSTALLED

The CDLS may be inoperative provided the complete system is deactivated in the unlocked position and is not required by operational regulations for the intended flight.

CDLS WITH BACK UP SYSTEM INSTALLED

The CDLS normal system (normal control unit, toggle SW and lights on CKPT DOOR CONT Panel, buzzer, keypad, door release strikes) may be inoperative if:
- the interphone system between the cabin and the CKPT is operative,
- the LKG SYS selector is set to the BK UP position on CKPT DOOR BK UP panel,
- the back-up control unit is operative.

In backup mode:
- the cabin crew has to use the interphone to make any cockpit access request,
- the flight crew has to use the OPEN/FAULT CTL P/B located on the CKPT DOOR BK UP overhead panel, to unlock the door when access to the cockpit is authorized.

No emergency access from the cabin to the cockpit is available.

NOTE: This procedure does not apply when door release strikes are inoperative.

G7508471 - G3NT1T0 - FM52B1000000001

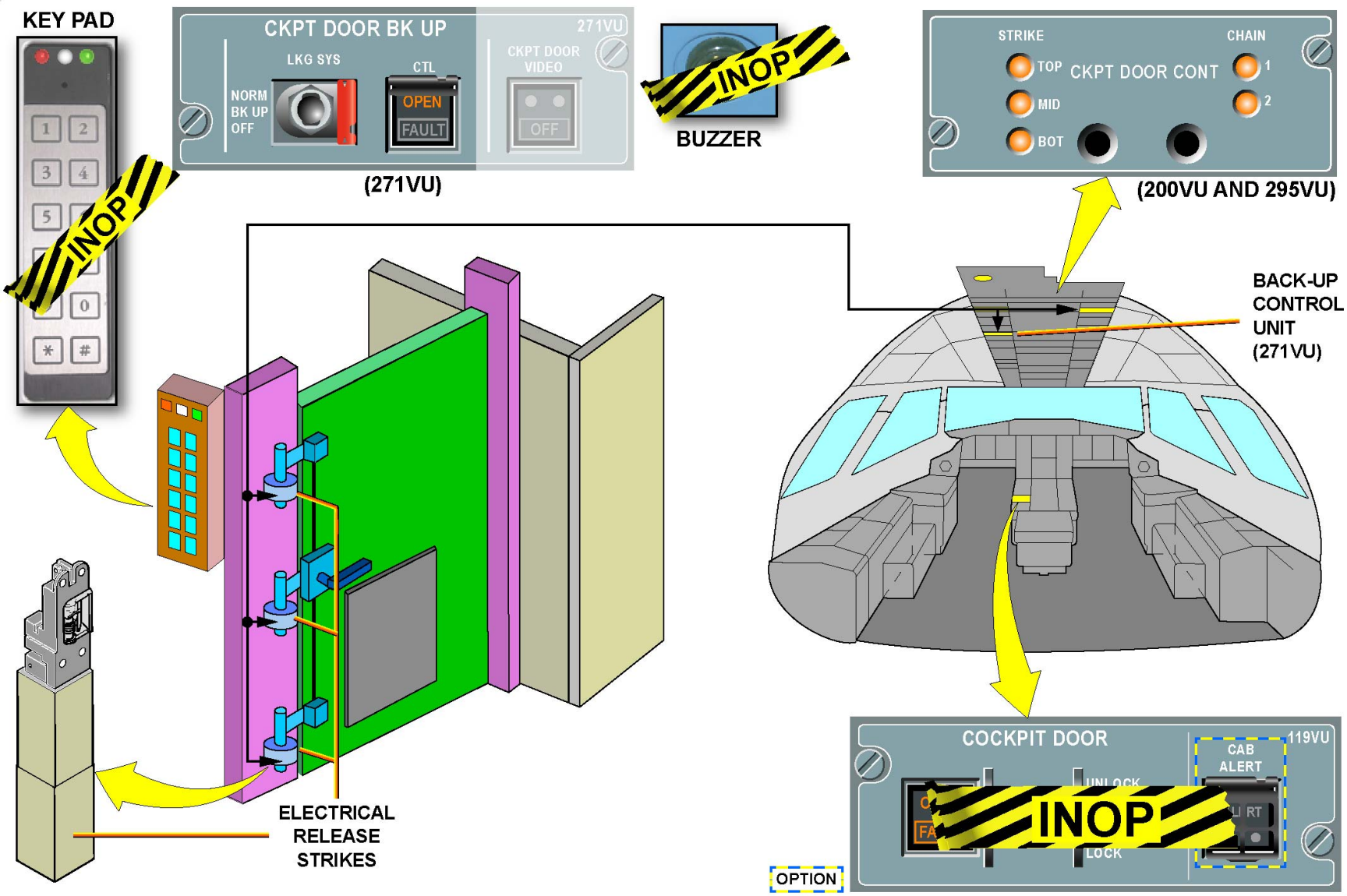

MEL/DEACTIVATION - CDLS WITH NO BACK UP SYSTEM INSTALLED & CDLS WITH BACK UP SYSTEM INSTALLED

G7508471 - G3NT1T0 - FM52B1000000001

DOORS LINE MAINTENANCE BRIEFING (2)

MEL/DEACTIVATION (continued)

DOOR WARNING

One or more indications on the ECAM DOOR/OXY page may be inoperative if a visual check is made to confirm that doors are closed and locked.

NOTE: If the PSCU or at least one proximity switch is the cause of a door caution, pressurization will be prevented at engines start.

The PSCU may be inoperative if:
- a visual check is made to confirm that the doors are closed and locked,
- the flight is not pressurized.

One proximity sensor is installed on:
passenger doors N °1, 2 and 4,
cabin emergency passenger doors N °3

The FWD, aft and bulk cargo doors may be inoperative for a period of time, which does not exceed three consecutive calendar days, and the A/C can be pressurized if:
- the related door locking mechanisms are checked to be functional,
- the door override procedure is applied,
- a visual check is made to confirm that the related door is closed and locked.

NOTE: If the affected door is re-opened, the complete maintenance procedure will need to be done again.
When more than one proximity switch is inoperative, the PSCU is as inoperative.

G7508471 - G3NT1T0 - FM52B1000000001

DOOR OVERRIDE PROCEDURE

...

✓ **Job set-up**

...

✓ **Make sure that:**

...

⇨ **Procedure**

...

⇨ **Door override:**

- Close, latch and lock all passenger, cabin emergency passenger and cargo doors.
- Identify on the ECAM DOOR/OXY page which door is displayed open and reopen and close again the affected door to confirm the ECAM indication.
- In the cockpit, on the overhead panel:
  DOOR SW OVRD P/BSW. . . . . ARM.
  Check that the associated light is illumninated in white.
- Open the affected door and confirm this by a visual check.
- Close, latch and fully lock the affected door and confirm this by a visual check.
- In the cockpit, on the overhead panel:
  DOOR SW OVRD P/BSW. . . . . OVRD.
- Check that the associated OVRD light is illumninated in blue (the ARM indication goes off).
- Check on the ECAM DOOR/OXY page that the affected door is displayed closed.

...

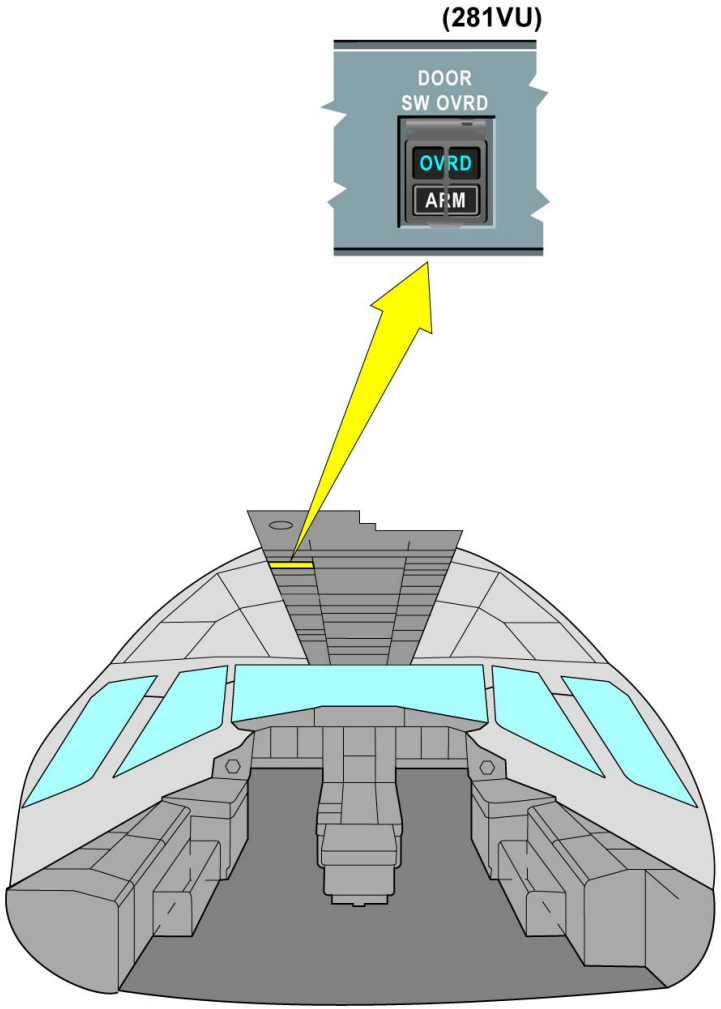

MEL/DEACTIVATION - DOOR WARNING

PASSENGER DOOR CONTROL MECHANISM D/O (3)

PASSENGER DOORS

The main functions of the passenger door control system are:
- handle operation,
- door lowering,
- door lifting,
- door locking,
- door stay mechanism.

Passenger doors:
The aircraft has six passenger doors (type A), located on each side of the fuselage at frames (Fr) 14/16A, Fr 33/35A and 73A/75A.
normal operation of the door is possible from the inside and the outside of the aircraft. Emergency operation is only possible from the inside. The doors are of fail-safe, plug-type construction. The door structure is of conventional design, composed of outer and inner skins, segments, beams and two lateral frames on which are fixed hinge fittings and locking mechanisms. The loads resulting from cabin pressure are transferred by eight stops located on each side of the door. Emergency exit doors:
Two additional type I passenger emergency exits, one on each side of the fuselage, are provided aft of the wing between Fr 53.5 and 53.7. The structural design and operation of these plug-type exits is similar to that of the main doors. Pax and emergency exit doors have an evacuation system in the lower part of the door (slide or slide/raft).

G7508471 - G3NT1T0 - FM52D1F52A70102

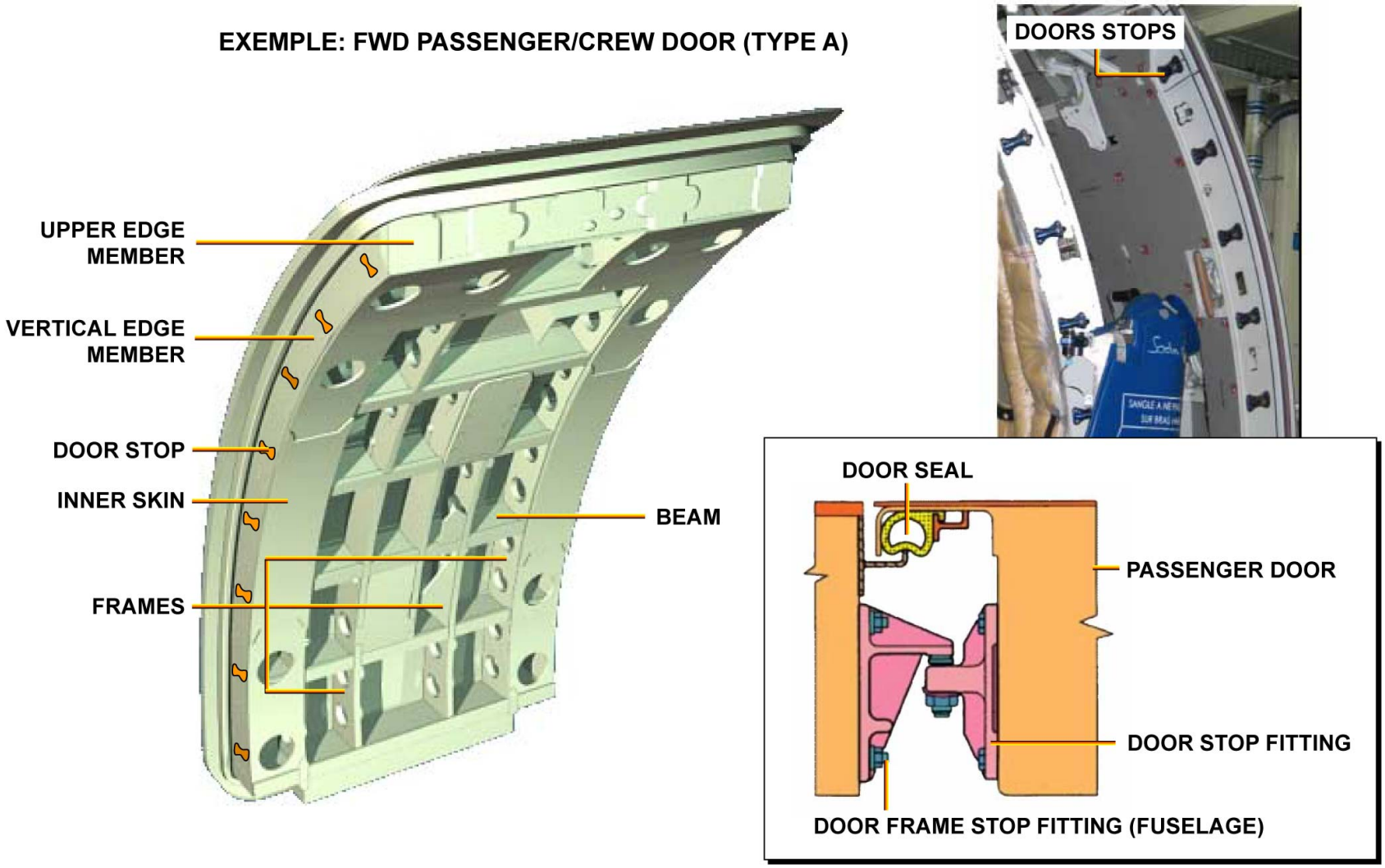

PASSENGER DOORS

G7508471 - G3NT1T0 - FM52D1F52A70102

PASSENGER DOOR CONTROL MECHANISM D/O (3)

HANDLE OPERATION

The inner and outer handles operate the locking mechanism via a gearbox. The gearbox insures that the outer handle does not move when the inner handle is operated. When the handle flap is flush with the fuselage, the engaging lever is not engaged and the outer handle is not connected. When the handle flap is pushed in, it engages the engaging lever. This connects the outer handle to the system.

G7508471 - G3NT1T0 - FM52D1F52A70102

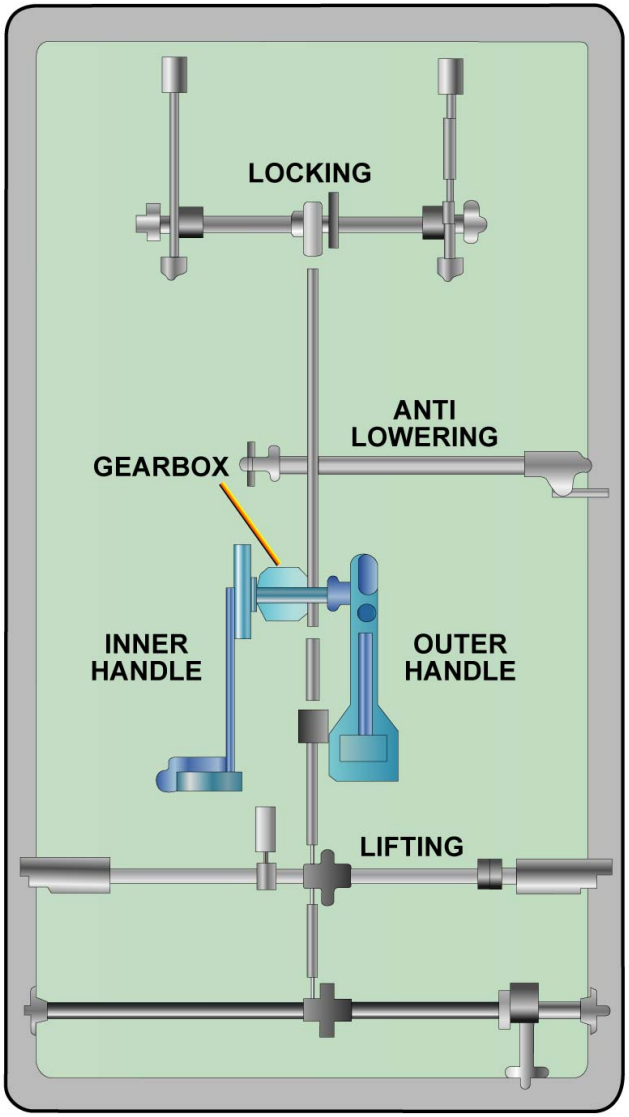

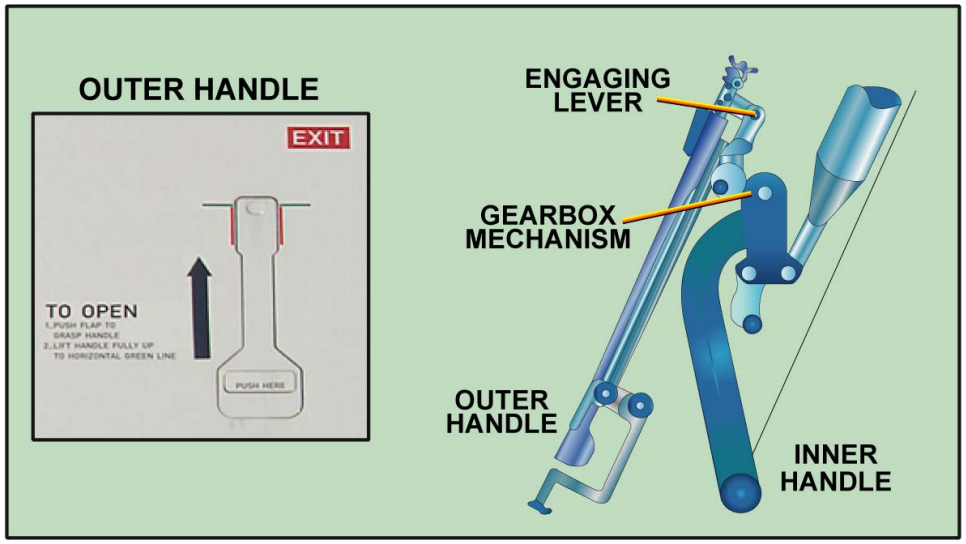

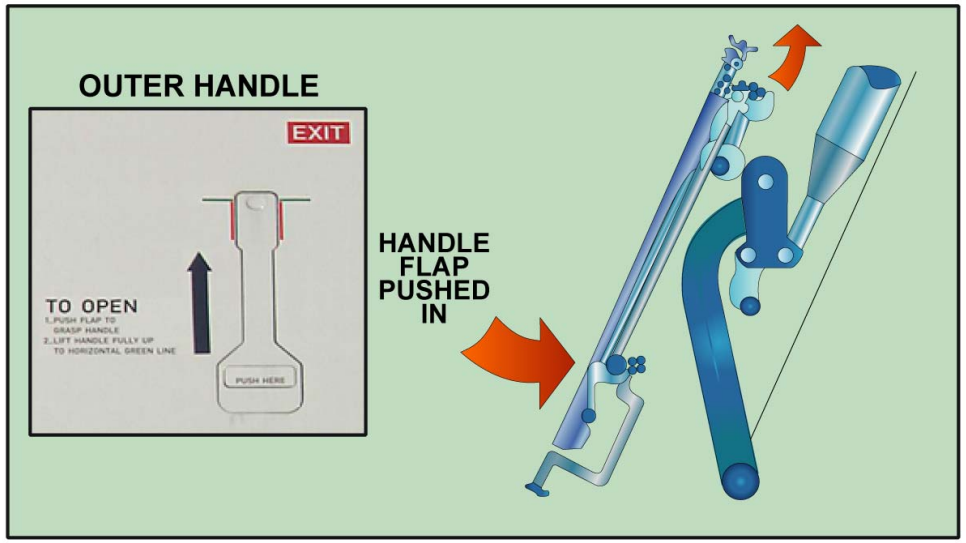

HANDLE OPERATION

PASSENGER DOOR CONTROL MECHANISM D/O (3)

LOCKING

The locking shaft keeps the passenger door in the closed position with two latching hooks. Each crank lever has a mechanical visual indicator. When the passenger door is locked, two springs hold the locking shaft in an overcenter position.

G7508471 - G3NT1T0 - FM52D1F52A70102

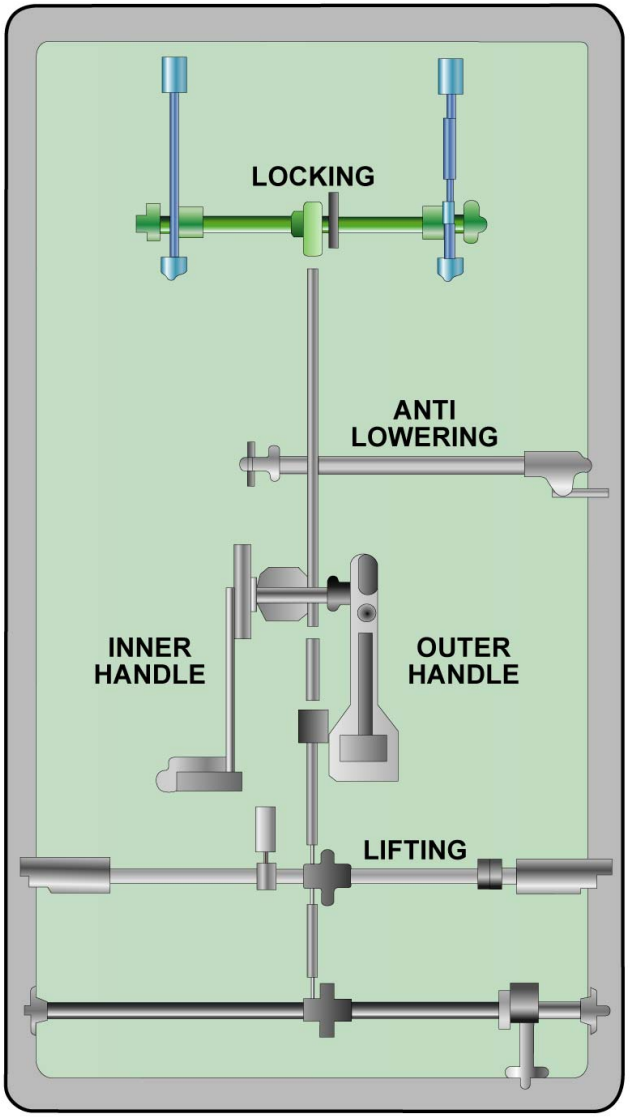

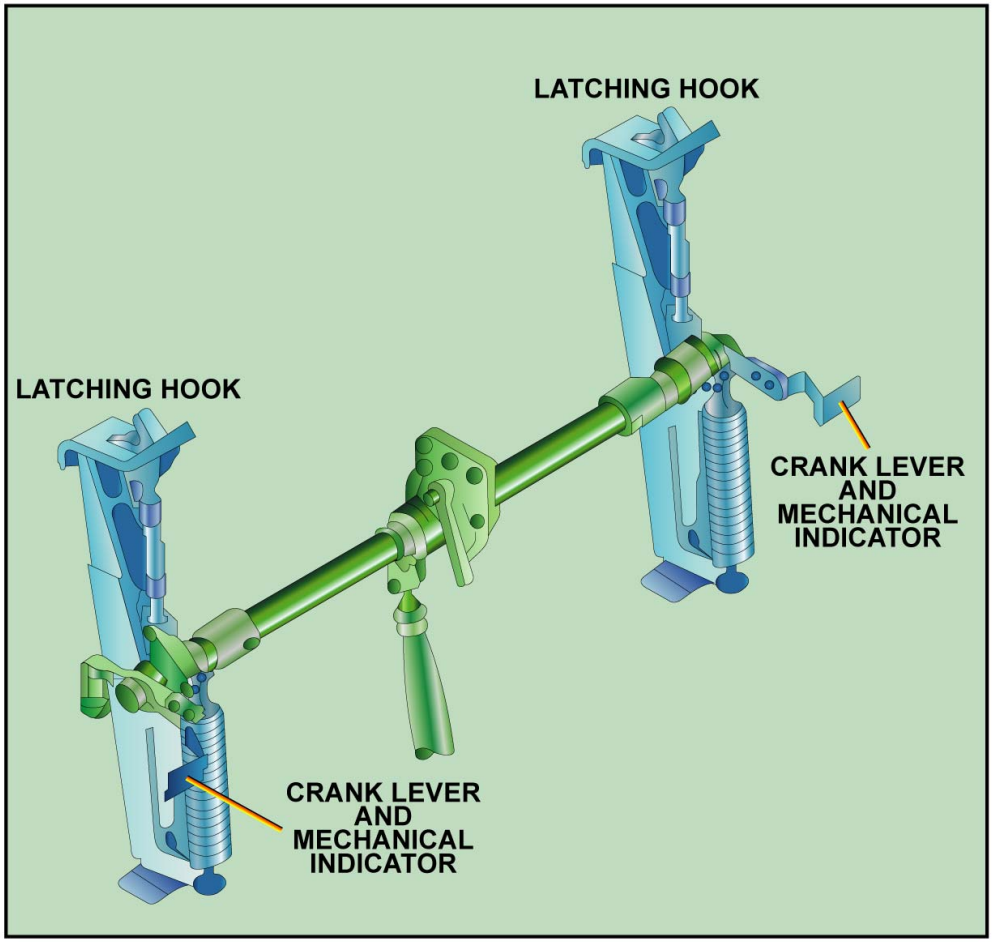

LOCKING

G7508471 - G3NT1T0 - FM52D1F52A70102

PASSENGER DOOR CONTROL MECHANISM D/O (3)

LIFTING

The lifting shaft enables the door to be lifted clear of the stop fittings during opening of the door and lowers the door for closing. The torque shaft and torsion bar spring compensate the door weight.

G7508471 - G3NT1T0 - FM52D1F52A70102

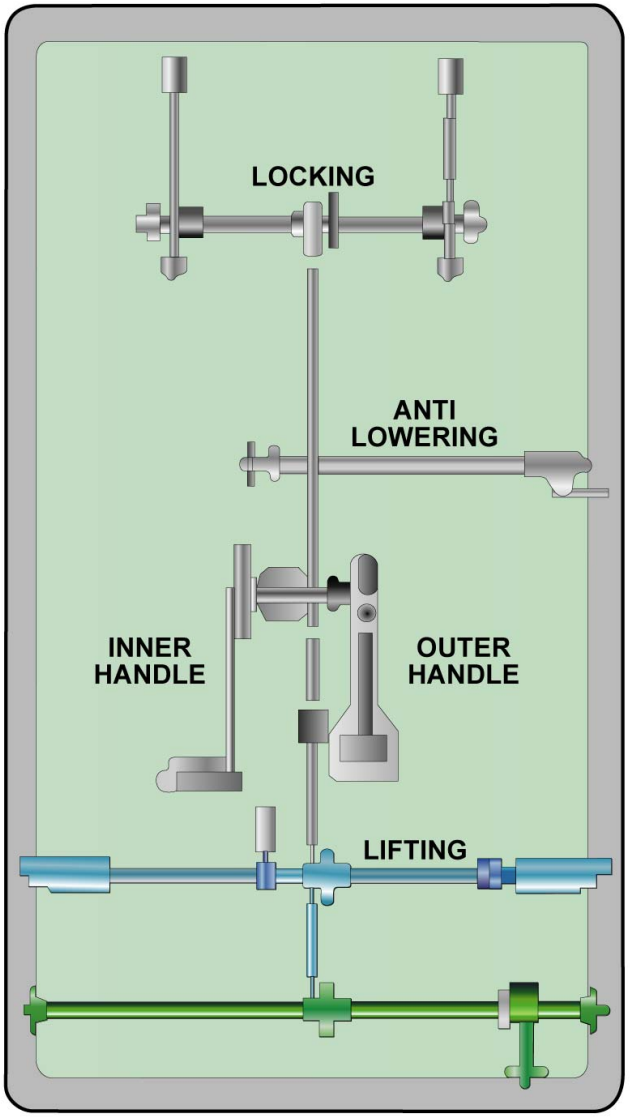

LIFTING AND TORQUE SHAFTS

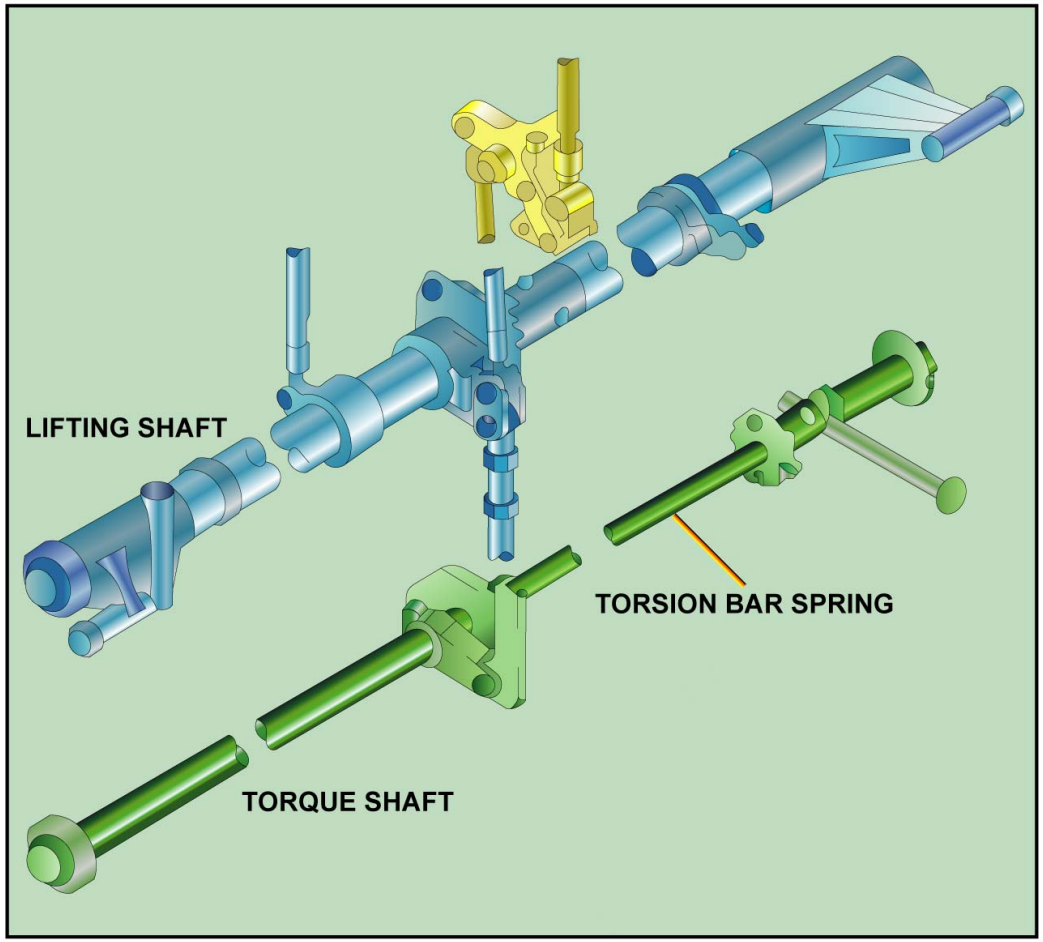

LIFTING

G7508471 - G3NT1T0 - FM52D1F52A70102

PASSENGER DOOR CONTROL MECHANISM D/O (3)

LOWERING

The lowering shaft acts on a safety cam to block the gearbox when the door is in the open position. As soon as the door is no longer in contact with the doorframe, the lowering shaft rotates the safety cam to lock the gearbox and thus prohibits lowering of the door.

G7508471 - G3NT1T0 - FM52D1F52A70102

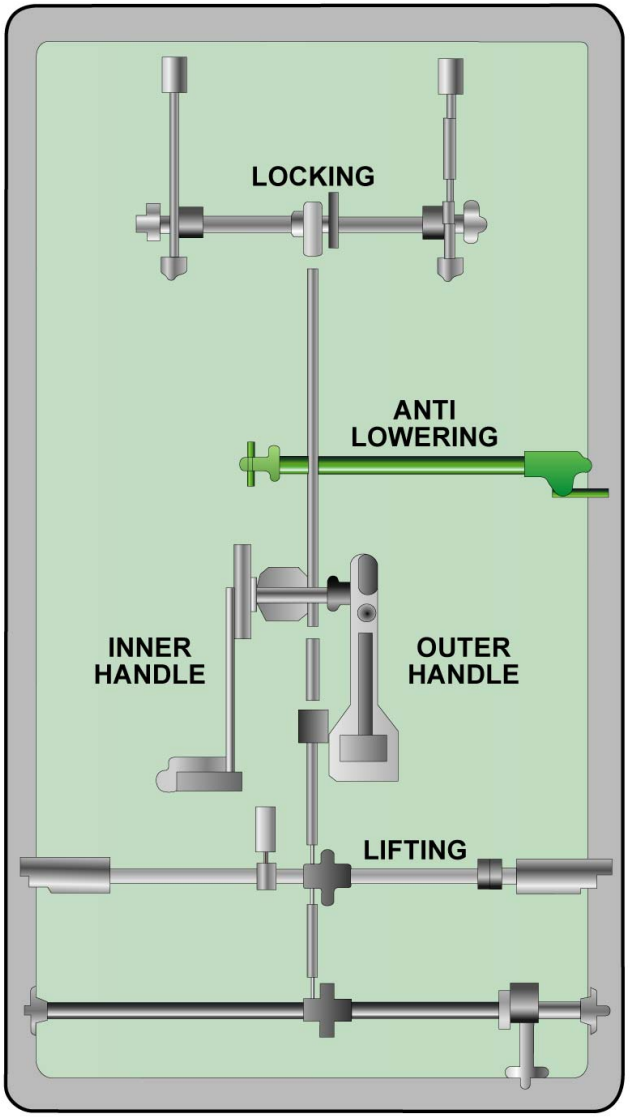

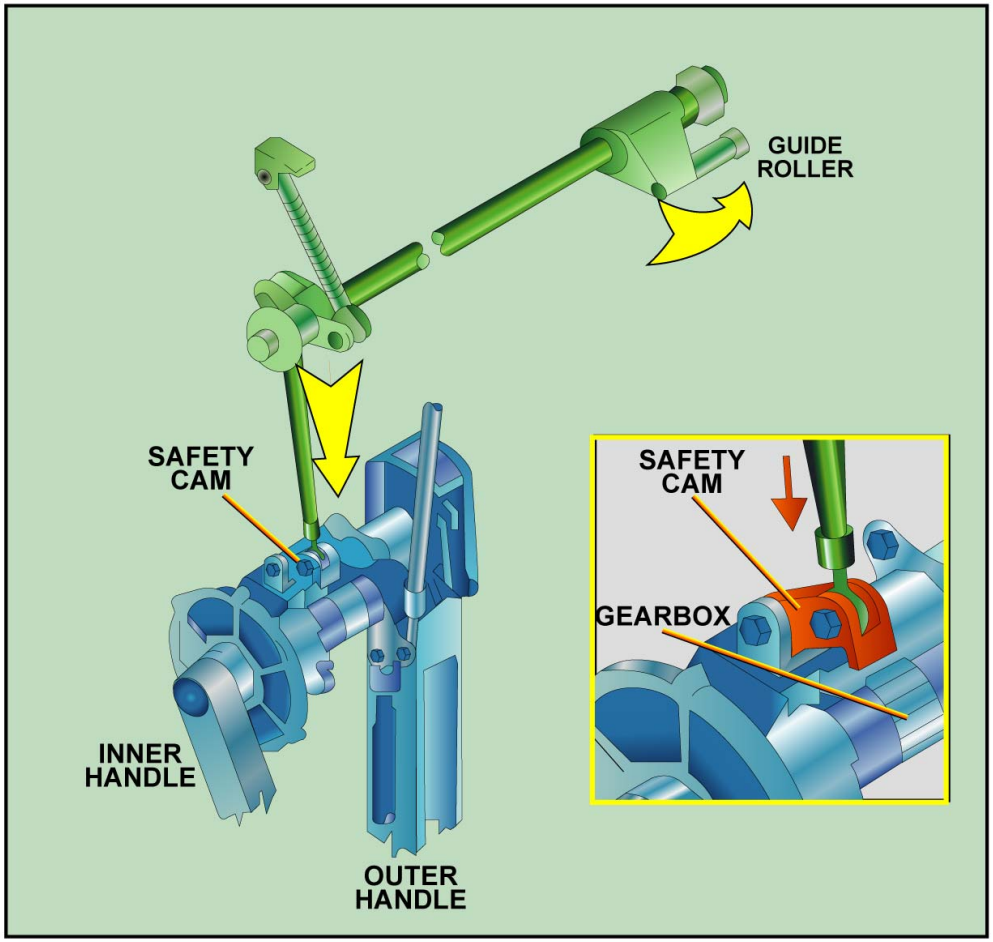

LOWERING

G7508471 - G3NT1T0 - FM52D1F52A70102

PASSENGER DOOR CONTROL MECHANISM D/O (3)

STAY MECHANISM

The door stay mechanism is installed in the support arm. It has a hook which holds the door in position when it is fully opened. All the support arms are interchangeable. Depending on the side the support arm is installed (RH or LH) the door stay mechanism position is maintained.

G7508471 - G3NT1T0 - FM52D1F52A70102

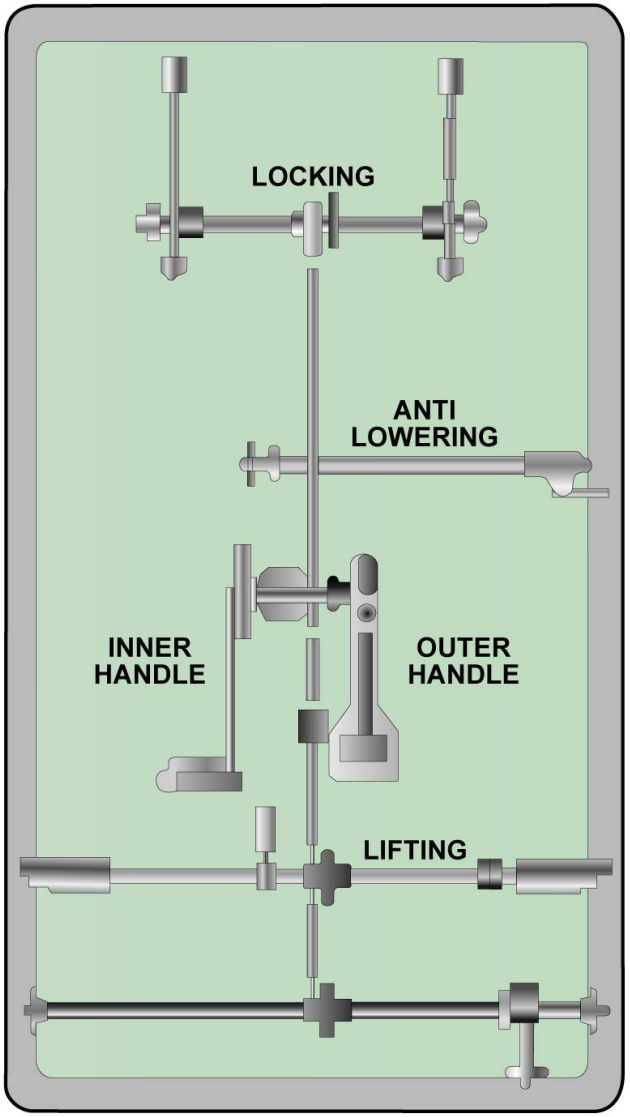

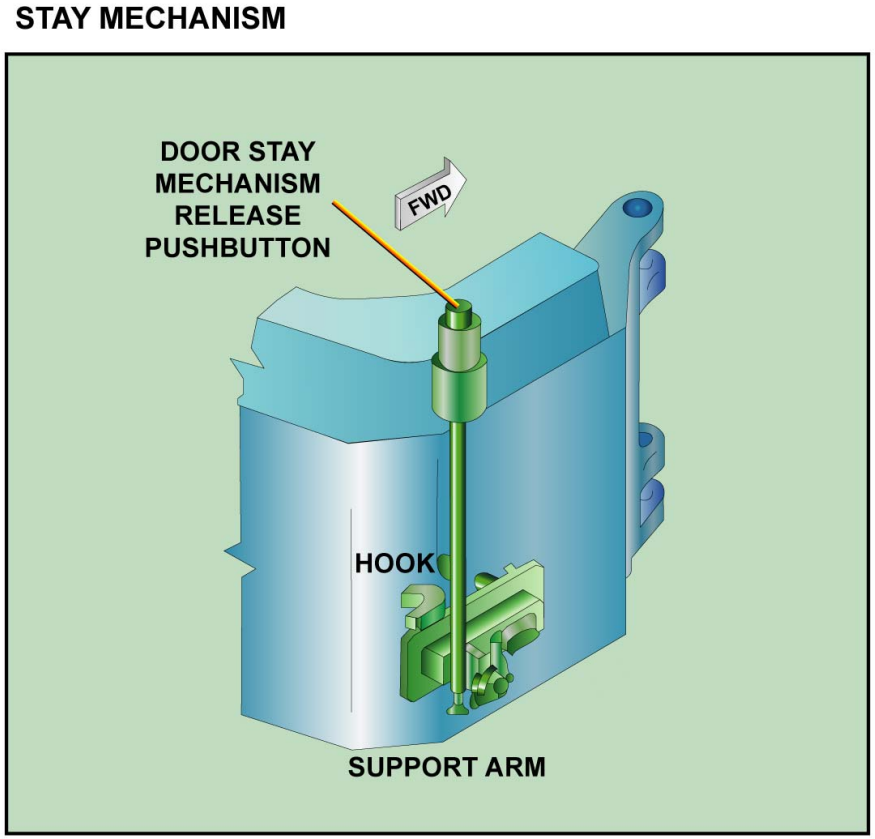

STAY MECHANISM

G7508471 - G3NT1T0 - FM52D1F52A70102

DOORS ESCAPE FACILITY RELEASE MECHANISM D/O (3)

GENERAL

The emergency escape-slide release mechanism helps to open the door in emergency and releases the emergency escape slide.
The main functions of the escape facility release mechanism are:
- arming lever safety pin,
- outside disarming,
- cylinder arming,
- girt bar operation.

SAFETY PIN

The safety pin locks the arming lever in the DISARMED position only. In ARMED mode, the lever cannot be locked to allow outside opening. Thus the safety pin must be stowed on the slide cover.

OUTSIDE DISARMING

When the outer handle is operated and the arming lever is in ARMED position, the cam returns the arming lever to the DISARMED position and the system cam in disarmed mode. The inner handle slides in the cam disk, and does not affect the arming lever position.

CYLINDER ARMING

When the arming lever is in ARMED position, the stop lever is positioned underneath the percussion mechanism of the emergency operation cylinder.

GIRT BAR

There is a slider on each end of the girt bar. The sliders lock the girt bar to the locking fittings when the system is in ARMED mode. The lock jaws hold the sliders to the door when the system is in DISARMED mode.

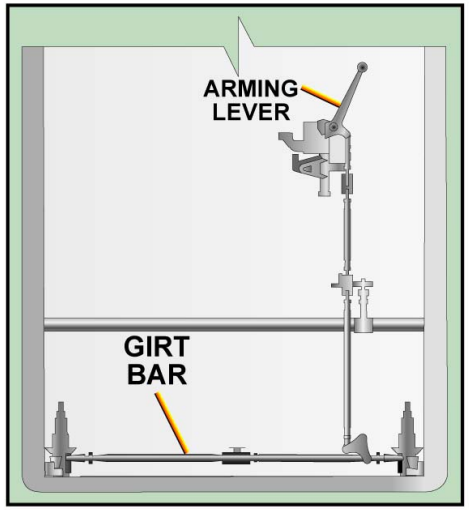

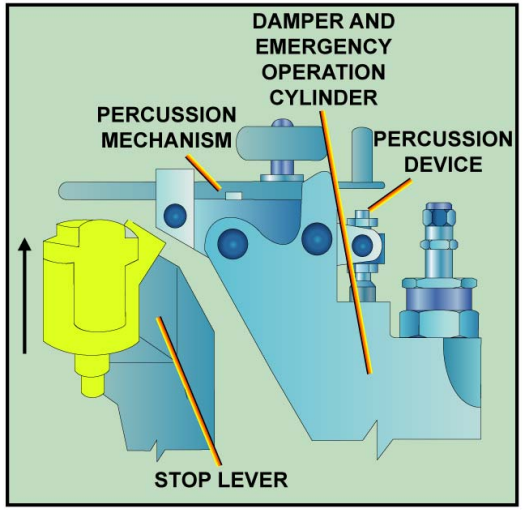

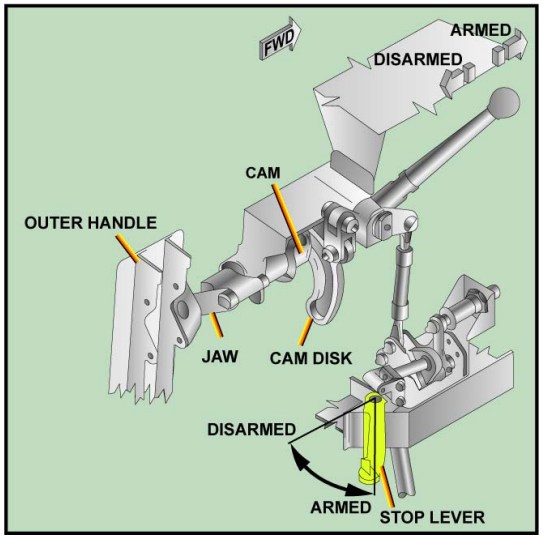

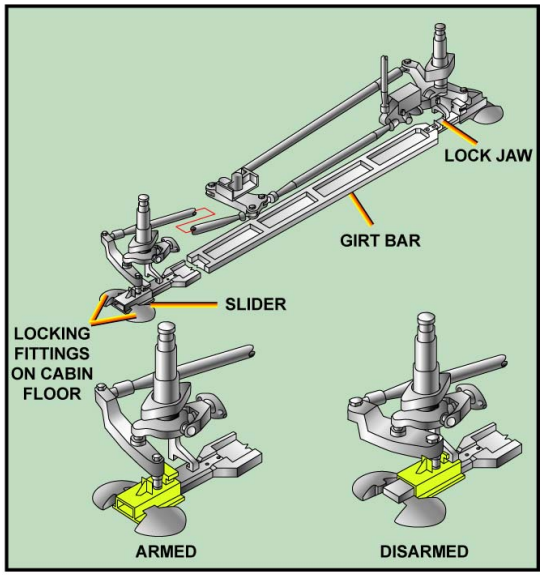

GENERAL ... GIRT BAR

G7508471 - G3NT1T0 - FM52D2F52A80102

DOORS ESCAPE FACILITY RELEASE MECHANISM D/O (3)

DAMPER EMERGENCY CYLINDER

The damper and emergency operation cylinder, located on the support arm, damps door movement during opening and closing sequences.

G7508471 - G3NT1T0 - FM52D2F52A80102

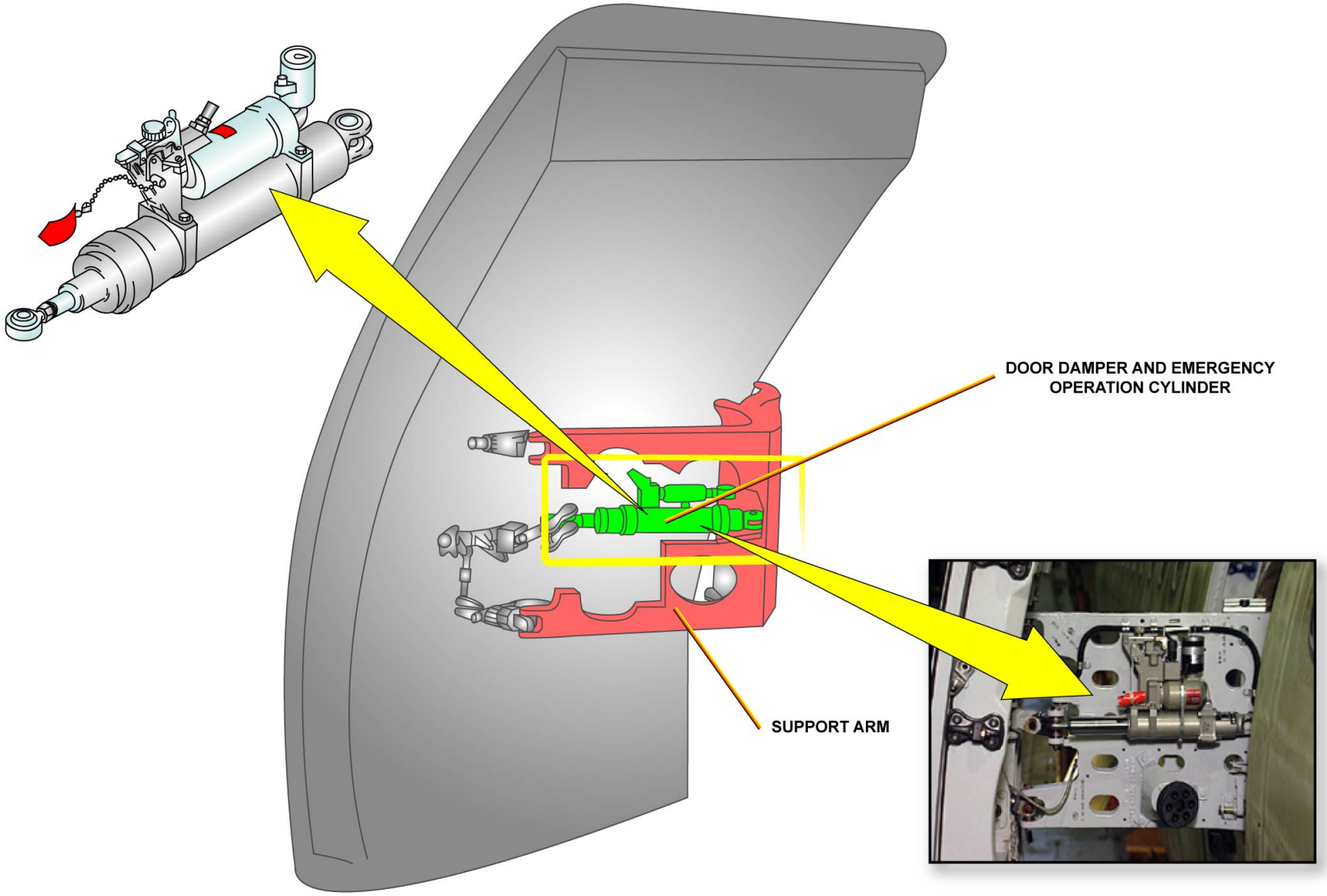

DAMPER EMERGENCY CYLINDER

G7508471 - G3NT1T0 - FM52D2F52A80102

DOORS ESCAPE FACILITY RELEASE MECHANISM D/O (3)

DOOR DAMPER FUNCTION

The door damper cylinder function is to damp door movement during opening and closing, in windy conditions for example. Damping is done by hydraulic fluid going through a restrictor as the operating rods extend or retract.

EMERGENCY FUNCTION

The damper and emergency operation cylinder forms an emergency actuator that assists and improves the opening speed of the door in emergency conditions. When opened in an emergency situation, the operating percussion lever lets the nitrogen bottle pressure act upon the piston to push it out.

NOTE: The door can be closed after an emergency opening.

INDICATION

A low pressure in the door damper cylinders is monitored by the CIDS and displayed on the FAP.
For dispatch functions, an indicator mounted on the cylinder can be used. As long as the needle is not in the red band, the door damper cylinder is considered serviceable.

G7508471 - G3NT1T0 - FM52D2F52A80102

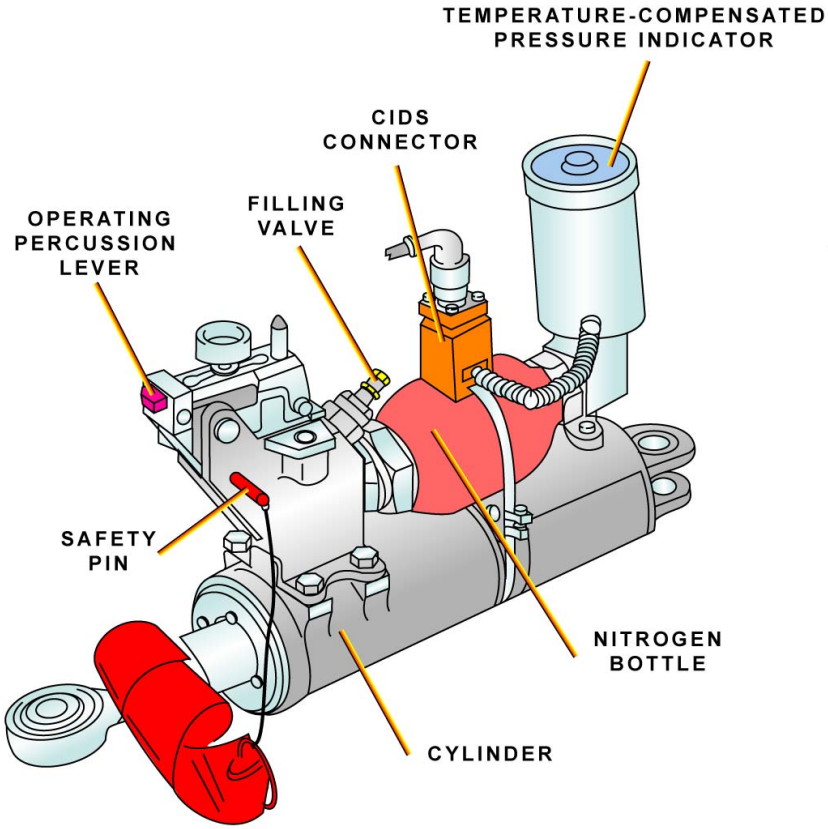

WITH TEMPERATURE-COMPENSATED PRESSURE INDICATOR AND CIDS CONNECTOR

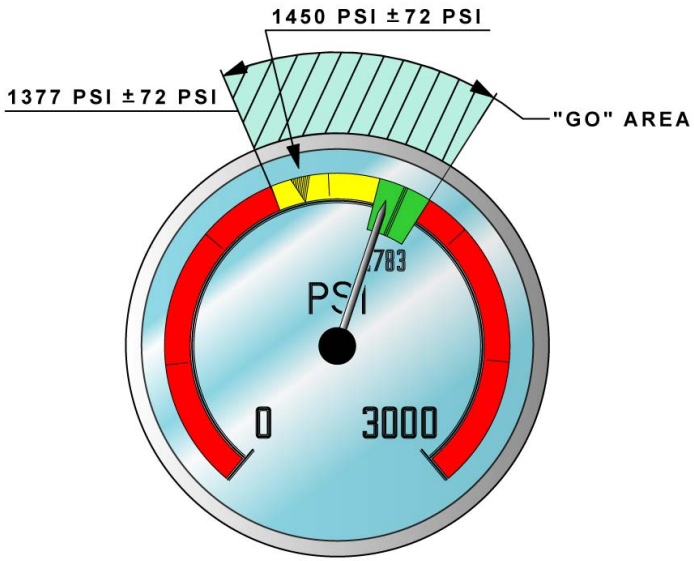

TEMPERATURE-COMPENSATED
PRESSURE INDICATOR

DOOR DAMPER FUNCTION ... INDICATION

DOORS ESCAPE FACILITY RELEASE MECHANISM D/O (3)

CYLINDER DEACTIVATION

Several tasks have to be carried out to deactivate the door damper cylinder. To disarm the system:
- the safety pin must be installed,
- cut and discard the lock wire,
- loosen the knurled screw,
- pull the operating striker lever to the rear to disarm it,
- tighten the knurled screw.

CYLINDER ACTIVATION

Several tasks have to be carried out to activate the door damper cylinder.
To activate the system:
- loosen the knurled screw,
- push the operating striker lever to the front to arm it,
- tighten the knurled screw,
- safety the knurled screw with the lock wire,
- remove the safety pin.

This video shows how to reactivate the door cylinder.

G7508471 - G3NT1T0 - FM52D2F52A80102

CYLINDER DEACTIVATION & CYLINDER ACTIVATION

G7508471 - G3NT1T0 - FM52D2F52A80102

DOORS ESCAPE FACILITY RELEASE MECHANISM D/O (3)

SERVICING

After an emergency operation of the door, the nitrogen bottle has to be refilled, using the filling valve. Remove the broken pieces of the shear pin and the damaged diaphragm after an emergency operation. Install a new shear pin and a new diaphragm.

NOTE: To fill the nitrogen bottle, take into account the temperature and pressure chart values, if the damper/emergency cylinder does not have a temperature-compensated pressure indicator.

G7508471 - G3NT1T0 - FM52D2F52A80102

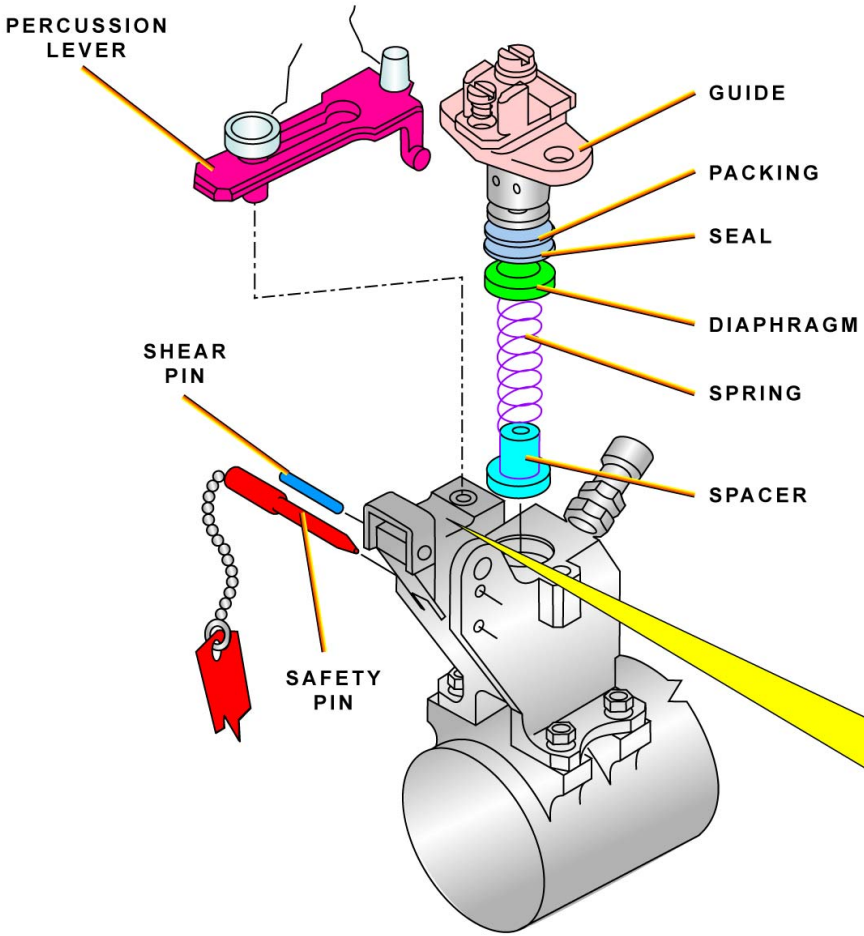

TEMP (°C)	PRESSURE (PSI±5%)
+50	1950
+40	1880
+30	1810
+20	1740
+10	1660
0	1610
-10	1540
-20	1465
-30	1395
-40	1325

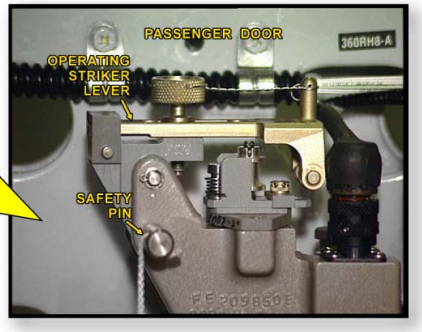

SERVICING

FORWARD AND AFT CARGO DOORS D/O (3)

CARGO DOOR OPENING WITH ELECTRIC PUMP

The FWD and the aft cargo doors are identical in design and in operation. The two doors can be opened simultaneously. For each door, the sequence of operation is written on the fuselage. A platform is required to gain access to the door operation controls. Push the handle flap in and pull the locking handle to the unlocked position. Stop the opening procedure if the red warning light flashes. Verify that all indicator flags are out. Make sure that the door can be opened freely. Release and pull the latching handle from the recess to the unlatched position. The door moves freely from the frame. Set the selector to OPEN. The yellow electric pump runs and the door starts to open. When the door is up and locked, the green light comes on. As soon as the light is on, the selector must be released. The electric pump continues to run for a few seconds after the selector is released. The procedure is now completed.

G7508471 - G3NT1T0 - FM52D7F52D30102

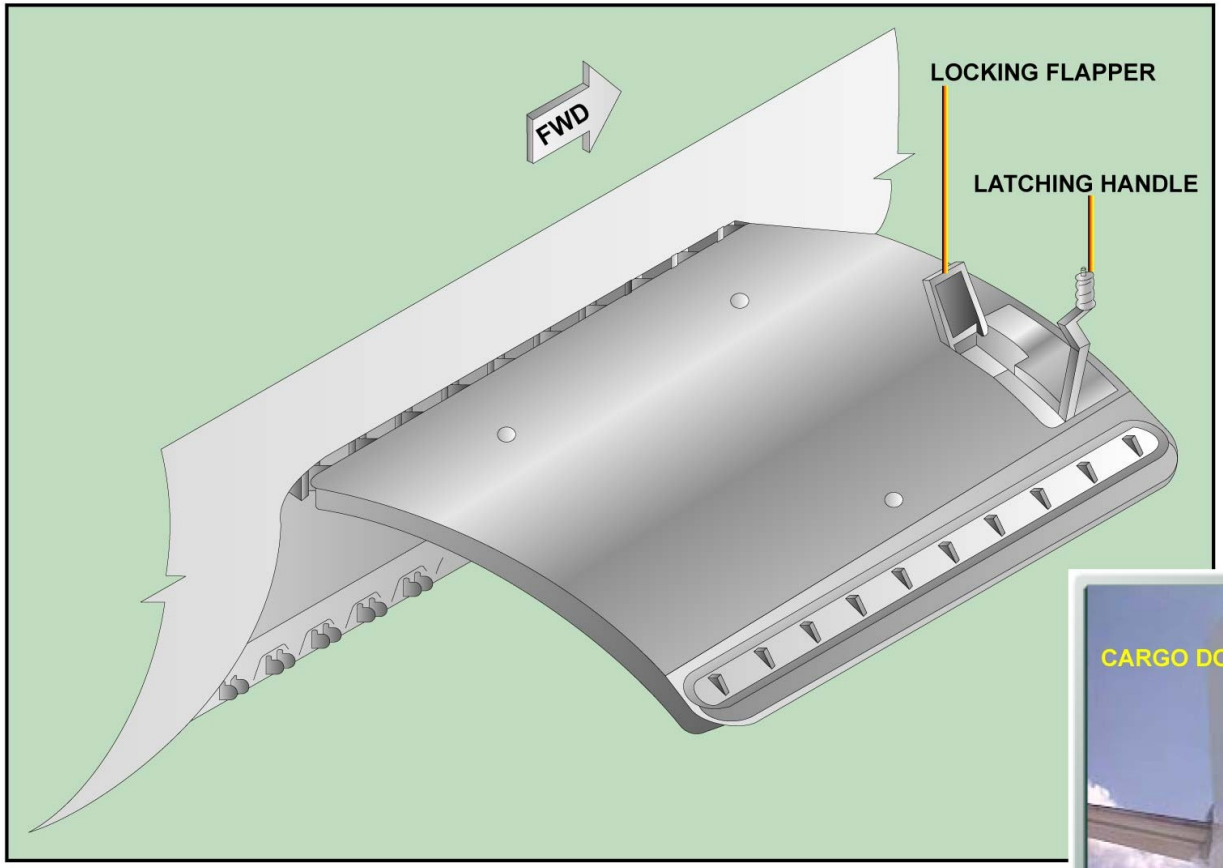

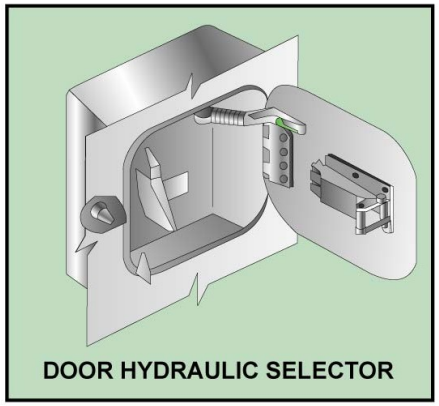

CARGO DOOR OPENING WITH ELECTRIC PUMP

G7508471 - G3NT1T0 - FM52D7F52D30102

FORWARD AND AFT CARGO DOORS D/O (3)

CARGO DOOR CLOSING WITH ELECTRIC PUMP

As for the opening, we will show the aft cargo door operation which is similar to the FWD one. The instructions for closing are written on the fuselage. A platform is required because of the height of the A/C. Make sure that the sill latches are up and that the door can close freely. Set the selector to CLOSE. The electric pump runs and the door starts to close. When you reach the second detent of the lever, the green light goes off. Release the selector when the door is in contact with the frame. The electric pump continues to run for a few seconds. Push the latching handle into the recess. Push the locking flapper down to the locked position. Make sure that all indicator flags are flush with the surface of the door. The door closing procedure using the electric pump is now completed.

G7508471 - G3NT1T0 - FM52D7F52D30102

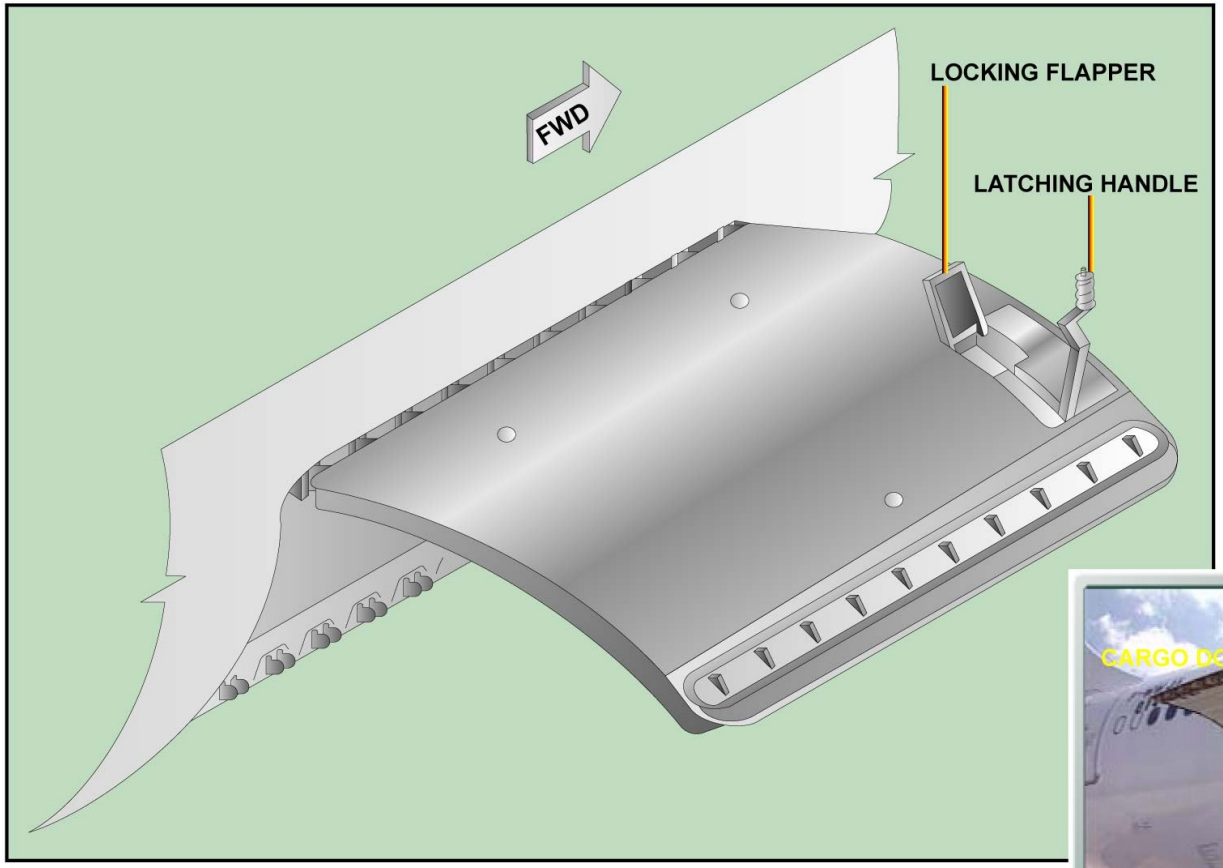

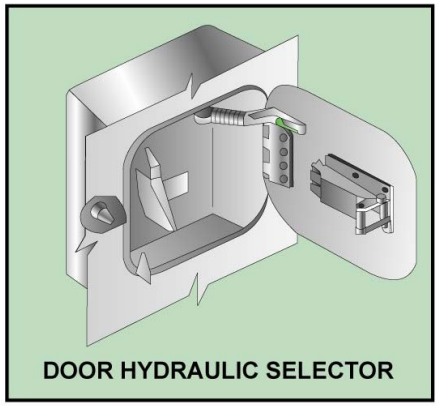

CARGO DOOR CLOSING WITH ELECTRIC PUMP

G7508471 - G3NT1T0 - FM52D7F52D30102

FORWARD AND AFT CARGO DOORS D/O (3)

CARGO DOOR OPENING WITH HAND PUMP

When the normal operation is not possible, the cargo doors can be operated using the hand pump fitted on the yellow hydraulic ground service panel. As for normal operation, we will operate the aft cargo door only, but its operation is identical to the FWD one. Manual operation requires two operators. The door is unlatched and unlocked following the same sequence of operation as for the normal opening. Take the pump handle on the green hydraulic ground service panel. Install the handle on the hand pump located on the yellow hydraulic ground service panel. On the door, operator 1 sets the selector to OPEN. Operator 2 starts to pump. The hand pump is of the double flow type. When the door is opened and locked, operator 1 releases the manual selector valve and operator 2 removes the handle and closes the access door. Then he restows the handle on the green hydraulic ground service panel.

G7508471 - G3NT1T0 - FM52D7F52D30102

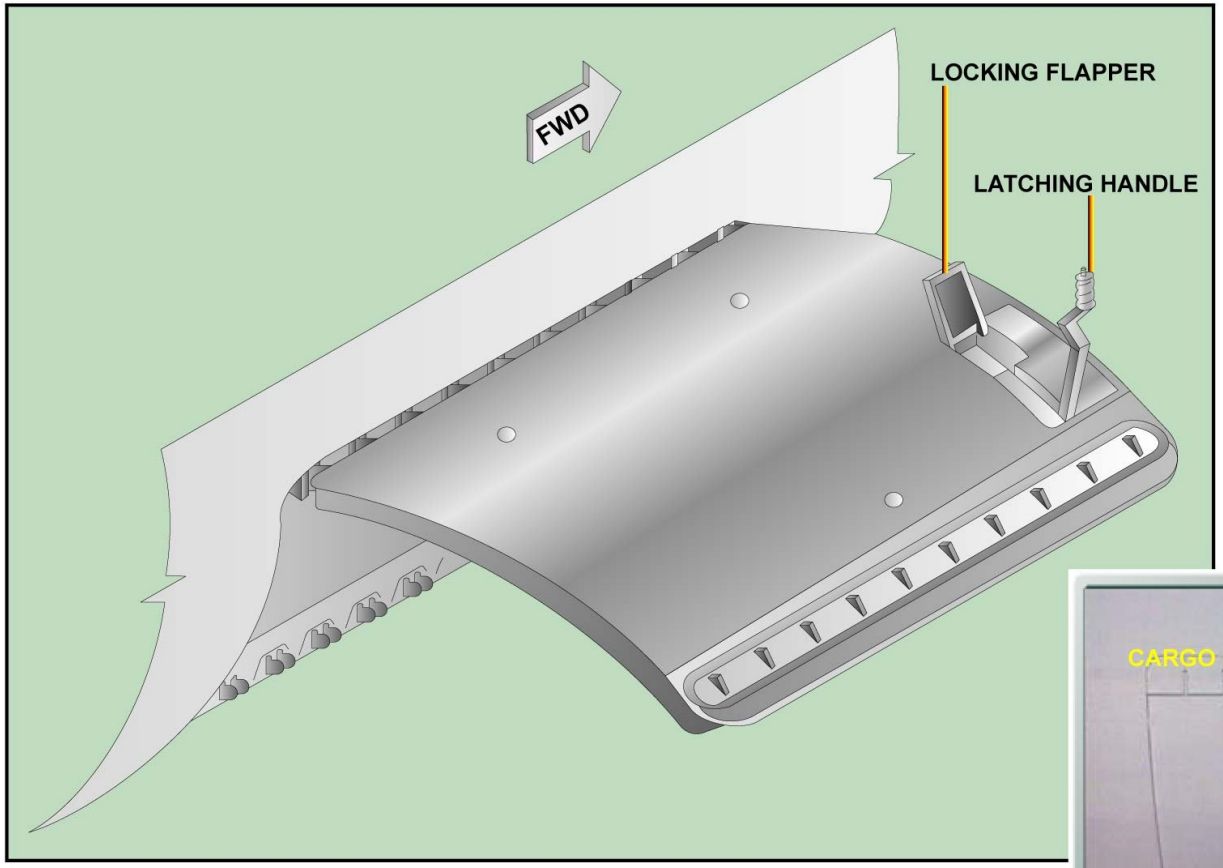

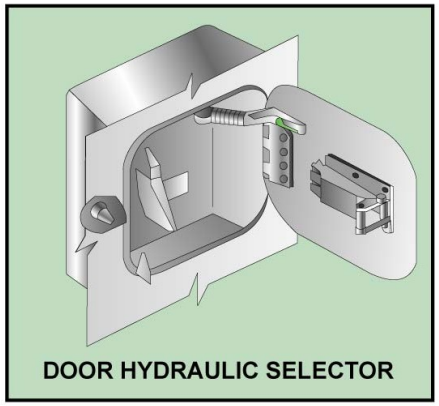

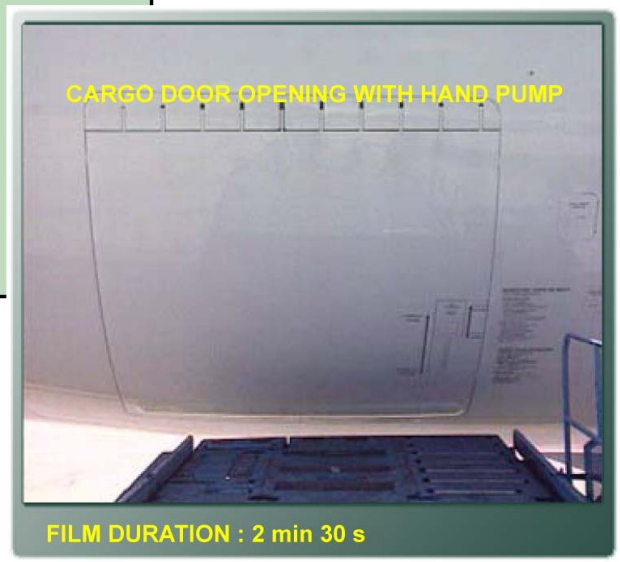

CARGO DOOR OPENING WITH HAND PUMP

G7508471 - G3NT1T0 - FM52D7F52D30102

FORWARD AND AFT CARGO DOORS D/O (3)

CARGO DOOR CLOSING WITH HAND PUMP

To close the cargo door using the hand pump, two operators are required. Connect the hand pump on the yellow hydraulic ground service panel. On the cargo door, make sure that the sill latches are up and that the door can close freely. On the manual selector valve, select the CLOSE position. The selector stops at the first detent. As soon as operator 2 starts to pump, the selector can be moved to the second detent. The door starts to close. Release the selector when the door is in contact with the frame. Operator 2 can stop pumping. Operator 1 can thus push back the latching handle and the locking flapper down to the locked position. He also makes sure that all indicator flags are flush with the door. Operator 2 can now restow the handle on the green hydraulic ground service panel and close the access.

G7508471 - G3NT1T0 - FM52D7F52D30102

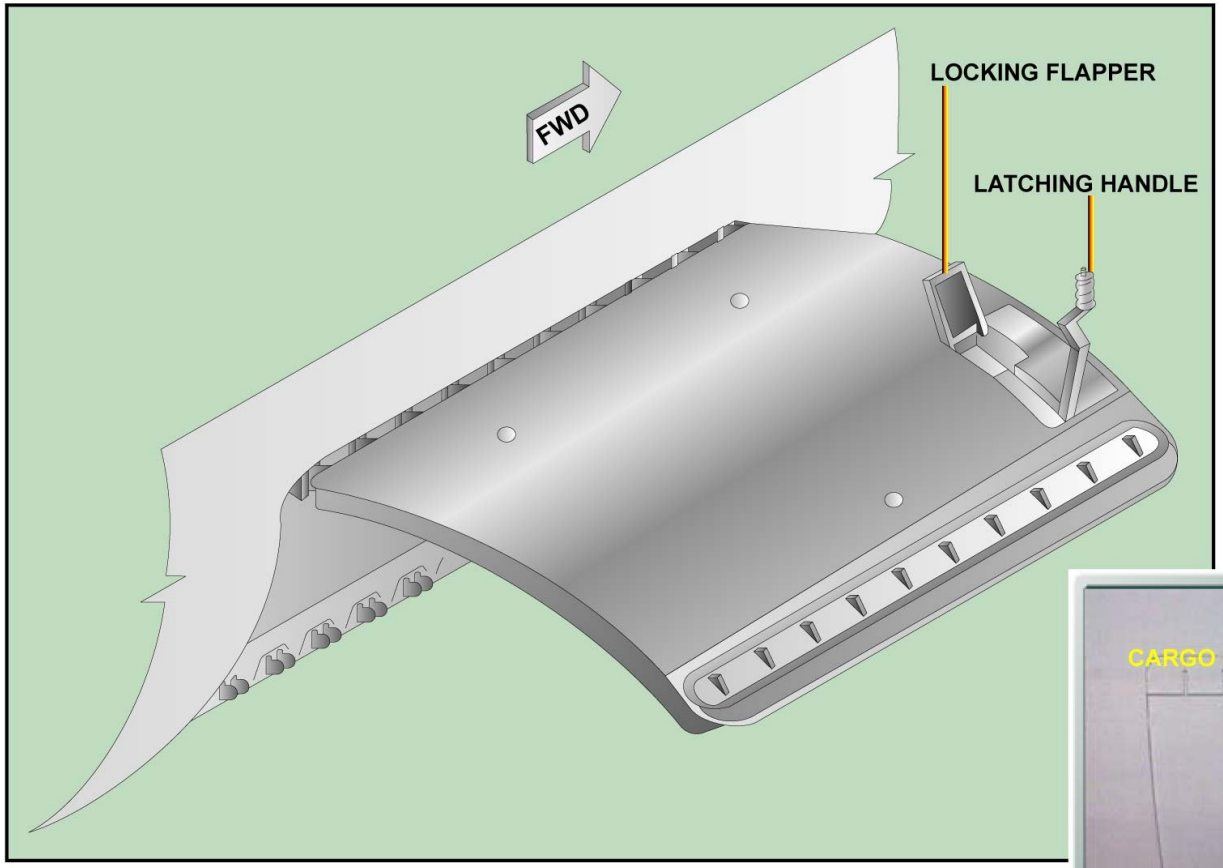

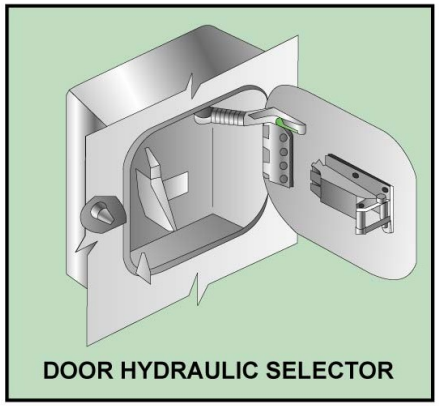

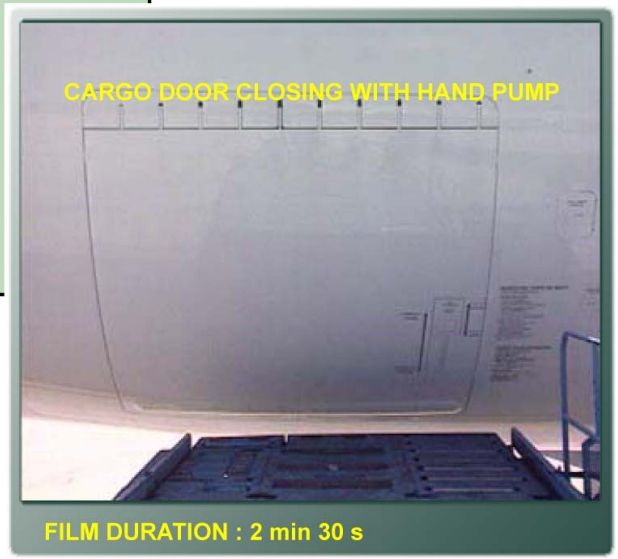

CARGO DOOR CLOSING WITH HAND PUMP

G7508471 - G3NT1T0 - FM52D7F52D30102

CARGO DOORS BULK OPERATION D/O (3)

OPENING

A platform is necessary to gain access to the bulk cargo door. The operating procedure is written on the fuselage. Push the P/B of the outer handle to release it from its recess. Move the outer or the inner handle to the OPEN position. Push the bulk cargo door partly inwards, then put the door handle to the locked position. Move the door inwards until the hook engages with the hook arrester.

G7508471 - G3NT1T0 - FM52D8F52E20102

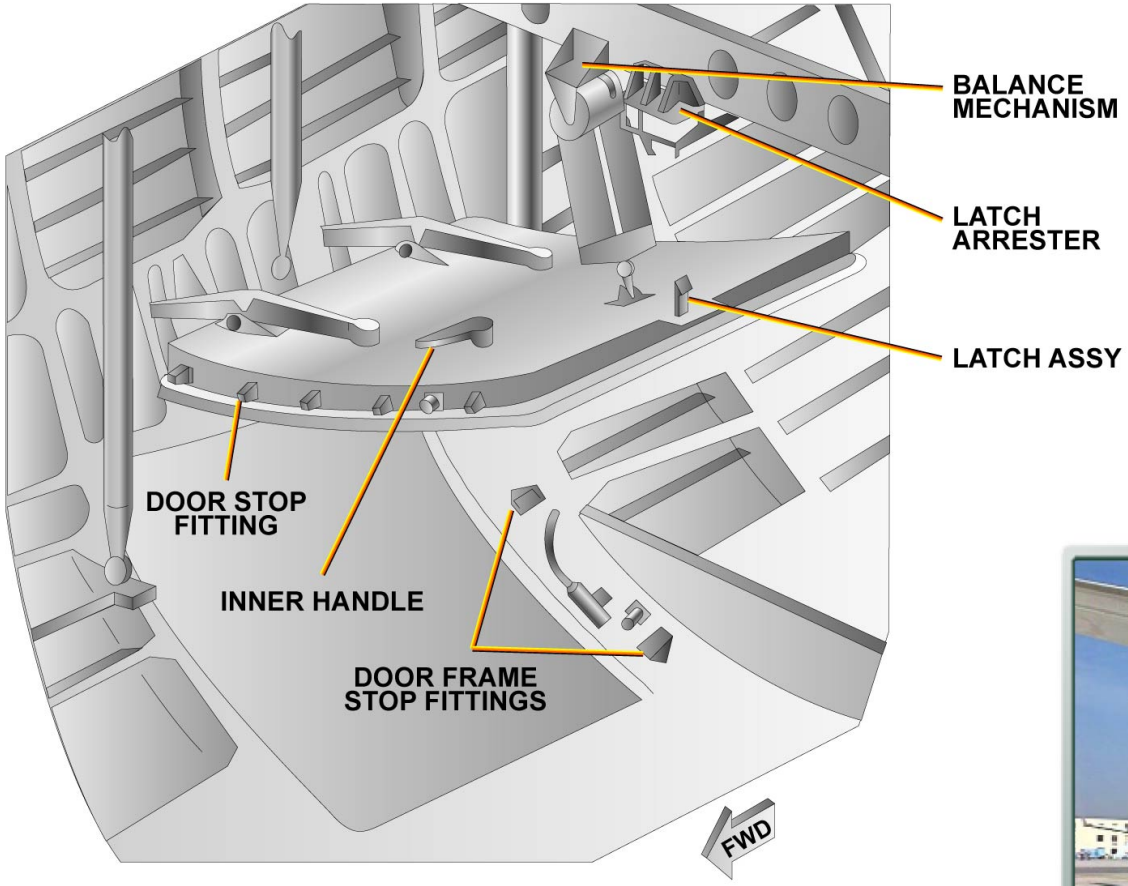

OPENING

G7508471 - G3NT1T0 - FM52D8F52E20102

CARGO DOORS BULK OPERATION D/O (3)

CLOSING

To close the door, use the outer handle. Move the outer handle to the OPEN position to unlock the door from the hook arrester. Hold the door to prevent it from falling down. Move the bulk cargo door down into the opening, and put the door handle in the locked position. Put the handle back into its recess. Remove the access platform.

G7508471 - G3NT1T0 - FM52D8F52E20102

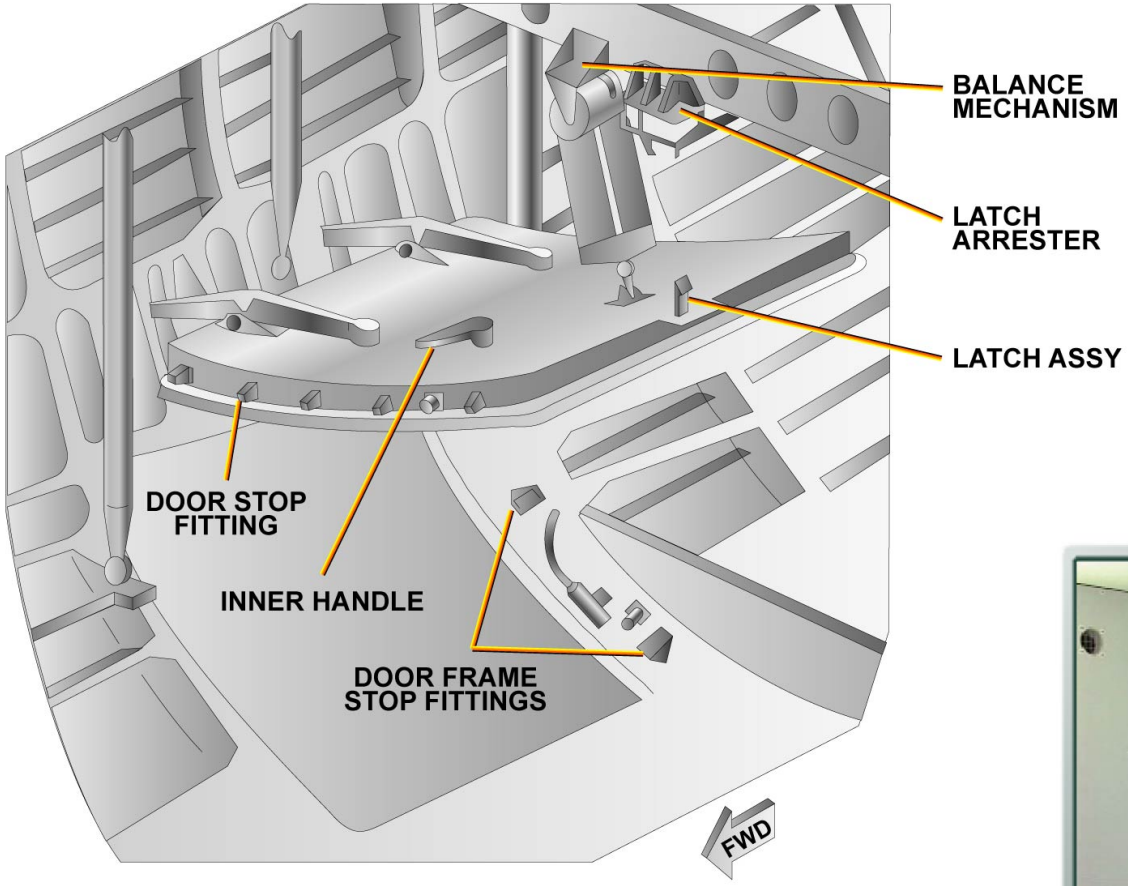

CLOSING

G7508471 - G3NT1T0 - FM52D8F52E20102

CARGO DOORS LOCKING MECHANISM D/O (3)

GENERAL

The cargo door has a manually operated locking and latching mechanism.
The components of the door mechanism are:
- a locking handle,
- a latching handle,
- a latching mechanism,
- a locking mechanism,
- an interlock mechanism.

G7508471 - G3NT1T0 - FM52D5F52D60102

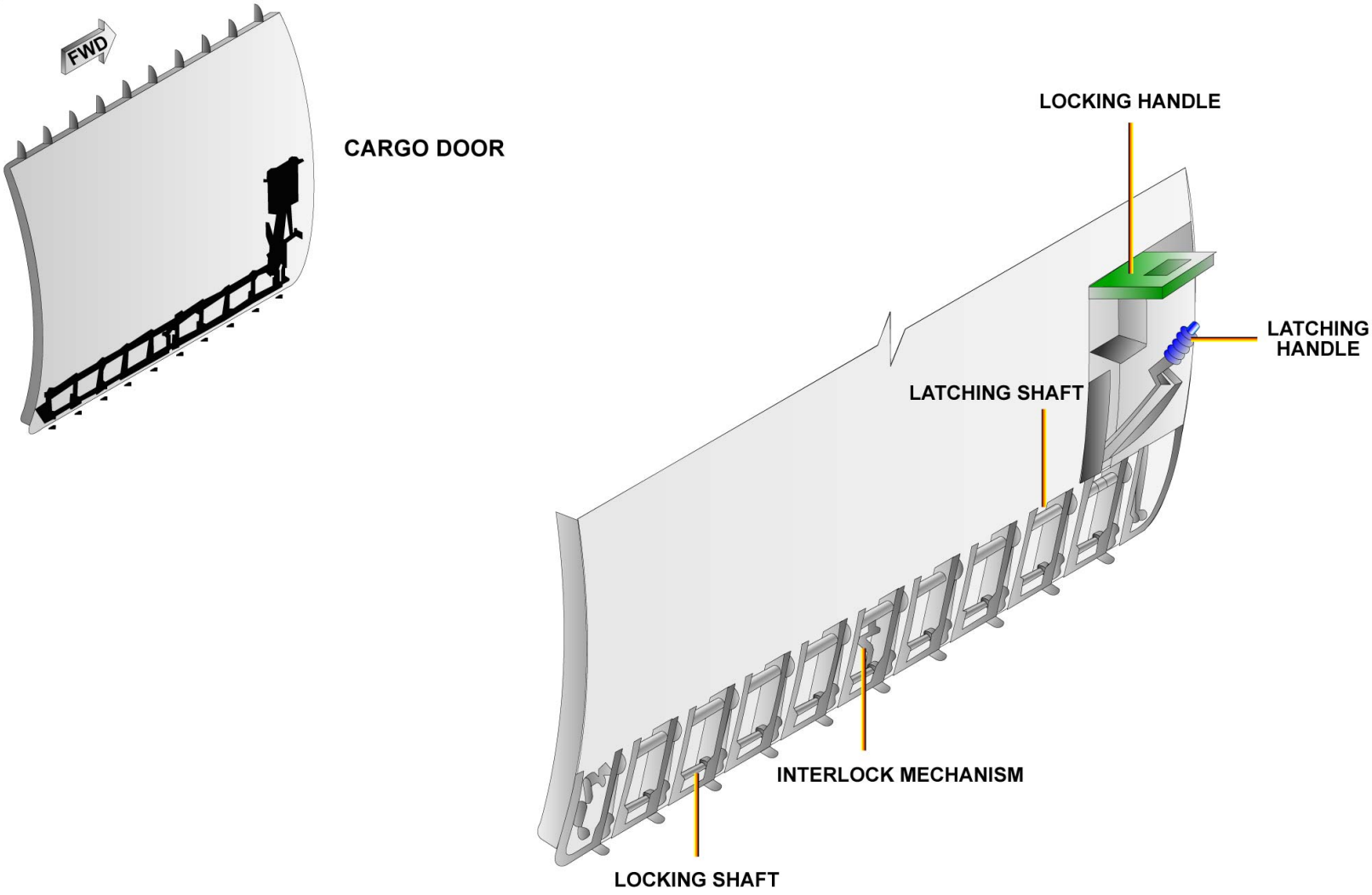

GENERAL

G7508471 - G3NT1T0 - FM52D5F52D60102

CARGO DOORS LOCKING MECHANISM D/O (3)

LOCKING HANDLE

A spring-loaded closed flap is installed in the locking handle. When the flap is pushed, the locking handle can be pulled to the horizontal position. It is UNLOCKED.
Two gas spring units keep the locking handle in the UNLOCKED or LOCKED position.

G7508471 - G3NT1T0 - FM52D5F52D60102

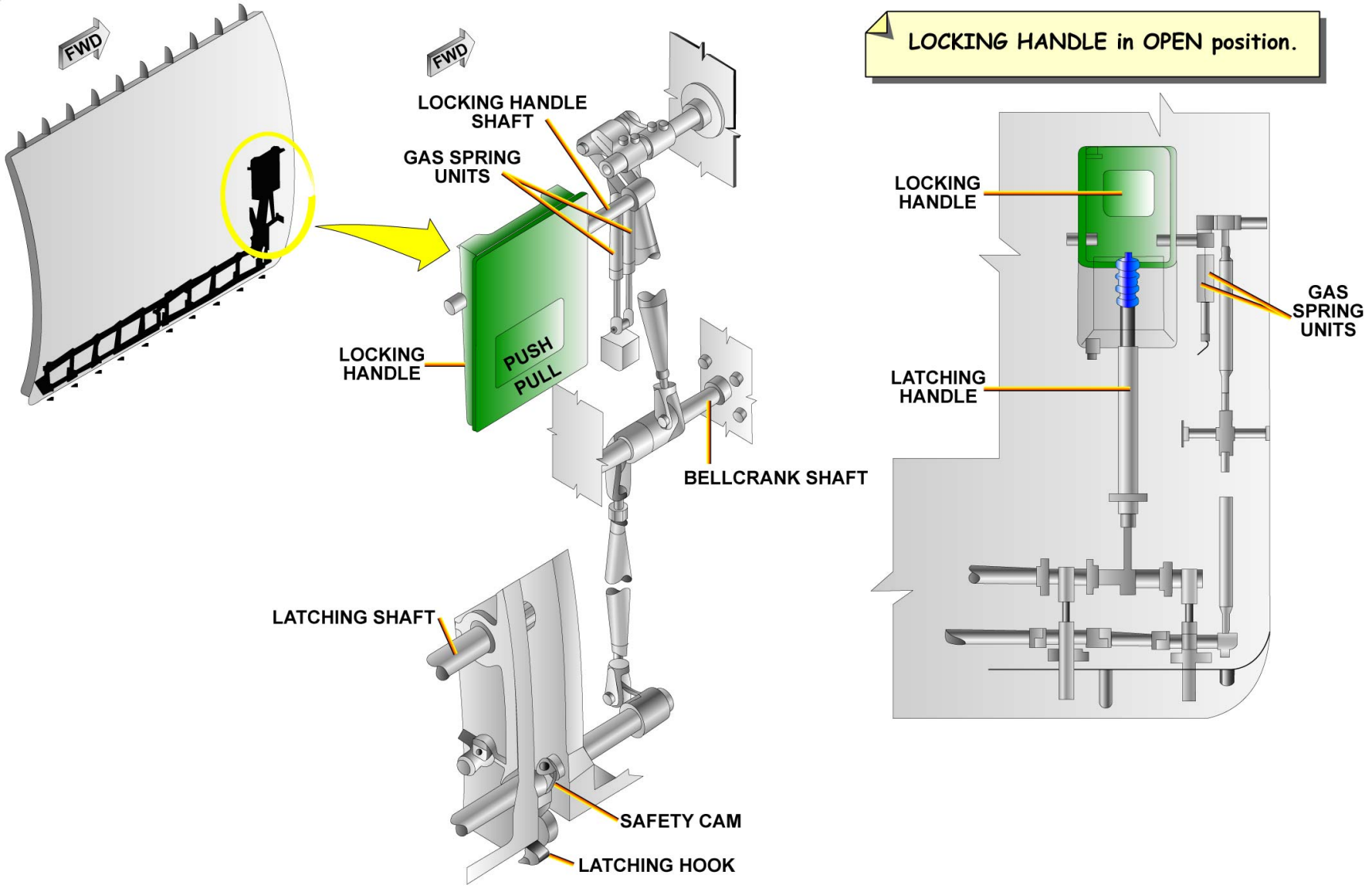

LOCKING HANDLE

G7508471 - G3NT1T0 - FM52D5F52D60102

CARGO DOORS LOCKING MECHANISM D/O (3)

LOCKING MECHANISM

The locking shaft is fitted with ten safety cams, one per hook in order to prohibit inadvertent hook opening. The indicator flags are also controlled via the safety cams.

G7508471 - G3NT1T0 - FM52D5F52D60102

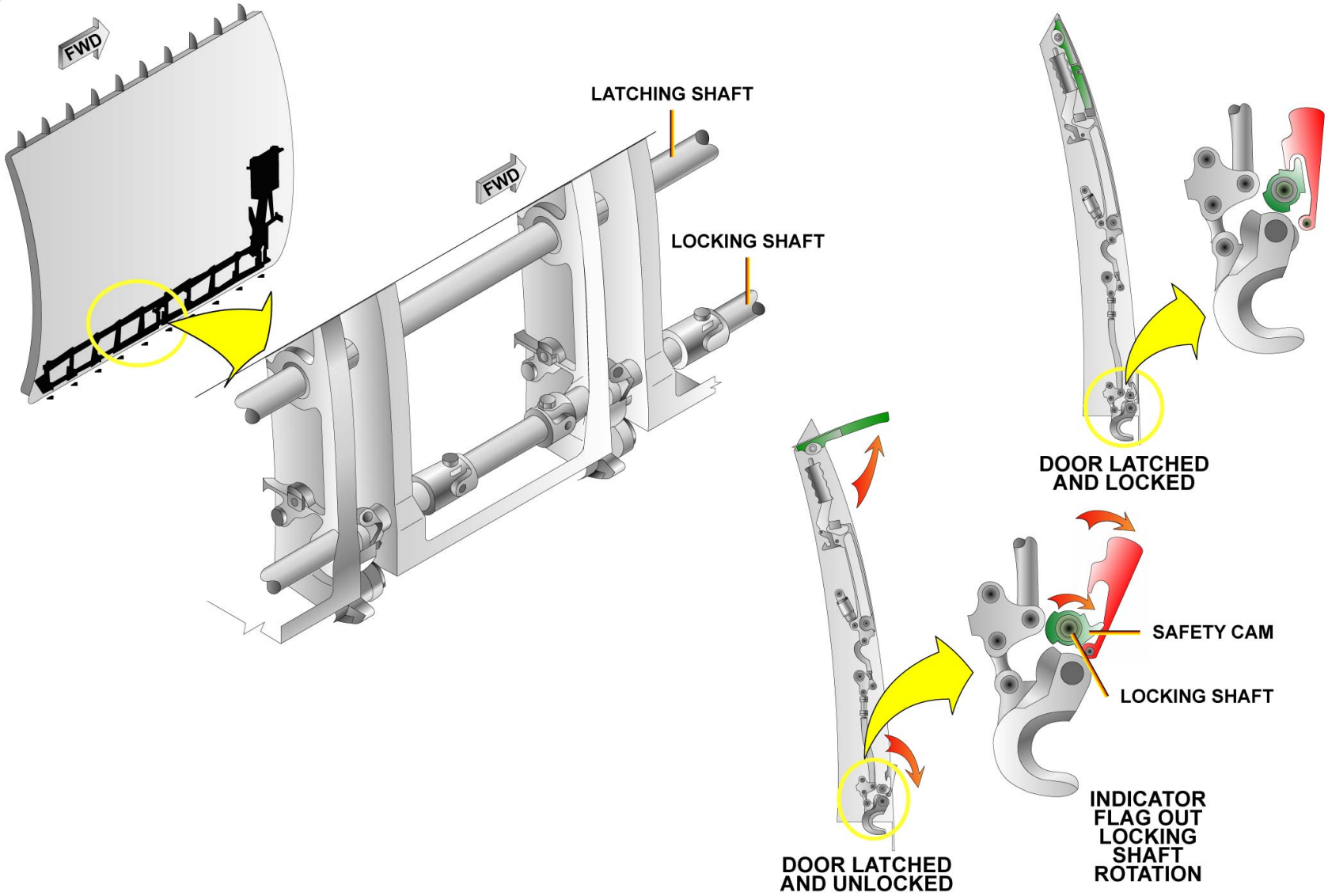

LOCKING MECHANISM

G7508471 - G3NT1T0 - FM52D5F52D60102

CARGO DOORS LOCKING MECHANISM D/O (3)

LATCHING HANDLE

A gas spring unit keeps the handle in the fully open or fully closed position. A catch, controlled by a P/B, secures the handle in the fully closed position.

G7508471 - G3NT1T0 - FM52D5F52D60102

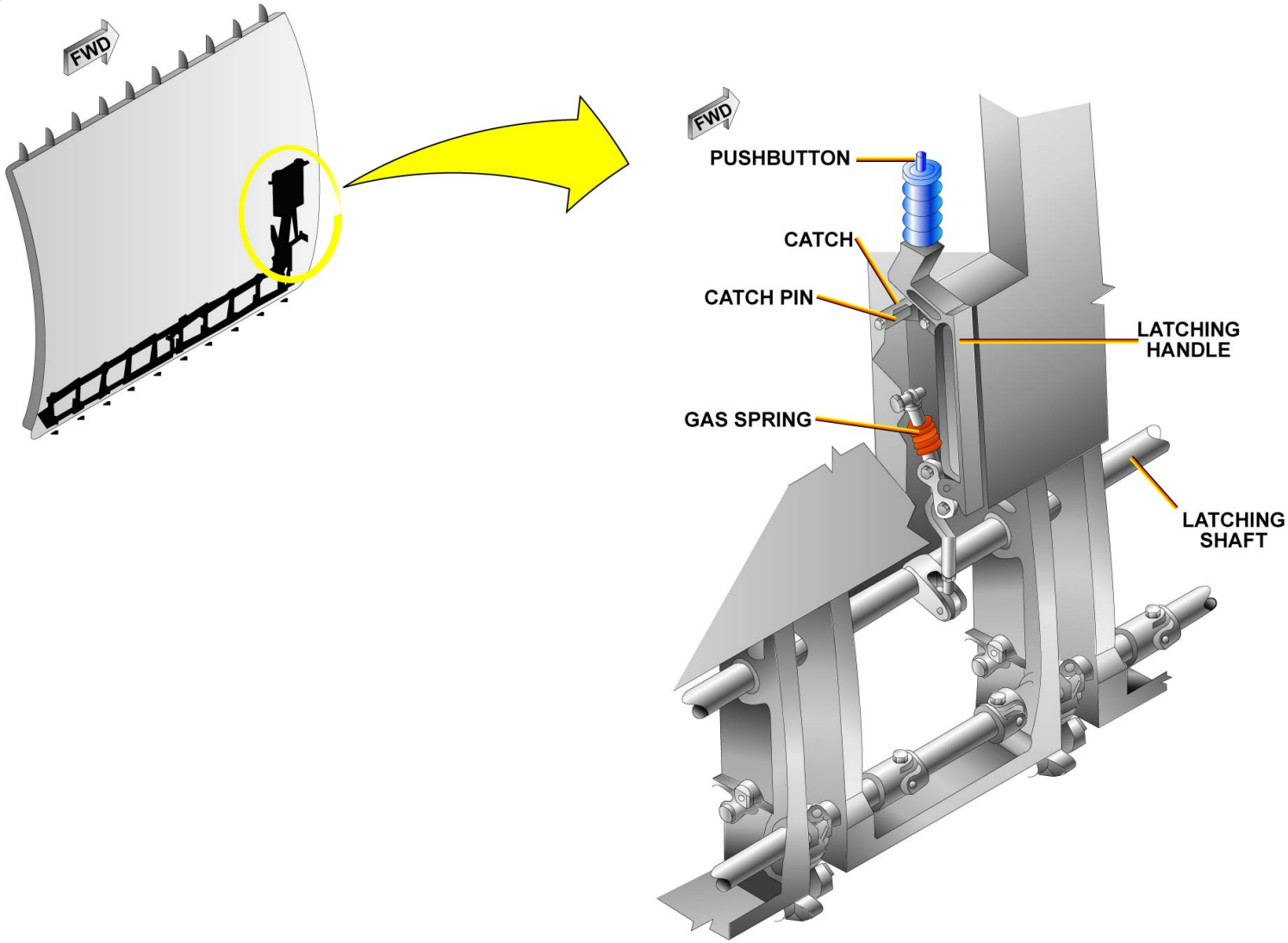

LATCHING HANDLE

G7508471 - G3NT1T0 - FM52D5F52D60102

CARGO DOORS LOCKING MECHANISM D/O (3)

LATCHING MECHANISM

The latching shaft engages or disengages the hooks by moving the overcentering bellcranks. When the hooks are engaged in side spool fittings on the door frame, they transmit the load from the door to the fuselage.

G7508471 - G3NT1T0 - FM52D5F52D60102

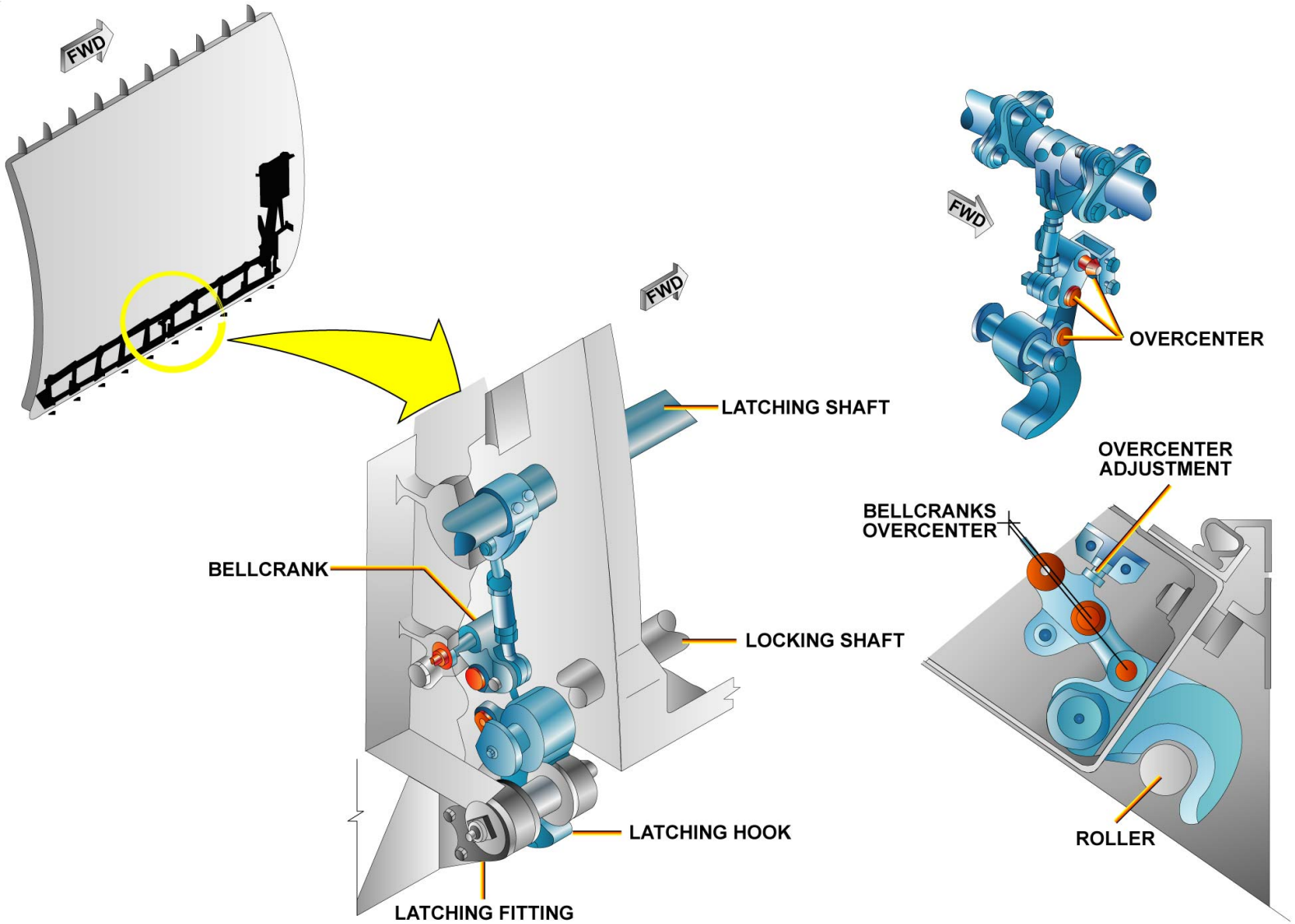

LATCHING MECHANISM

G7508471 - G3NT1T0 - FM52D5F52D60102

CARGO DOORS LOCKING MECHANISM D/O (3)

INTERLOCK MECHANISM

The interlock mechanism blocks the latching shaft as soon as the door is opened.
It is located at the fifth hook. It consists of a catch, which engages the latching shaft and prohibits the shaft rotation and the handle returning to the closed position. When the control lever gets in contact with the axle, it frees the catch and the handles.
If the handle is not fully open, the proximity sensor is far and the yellow electric pump cannot run.

G7508471 - G3NT1T0 - FM52D5F52D60102

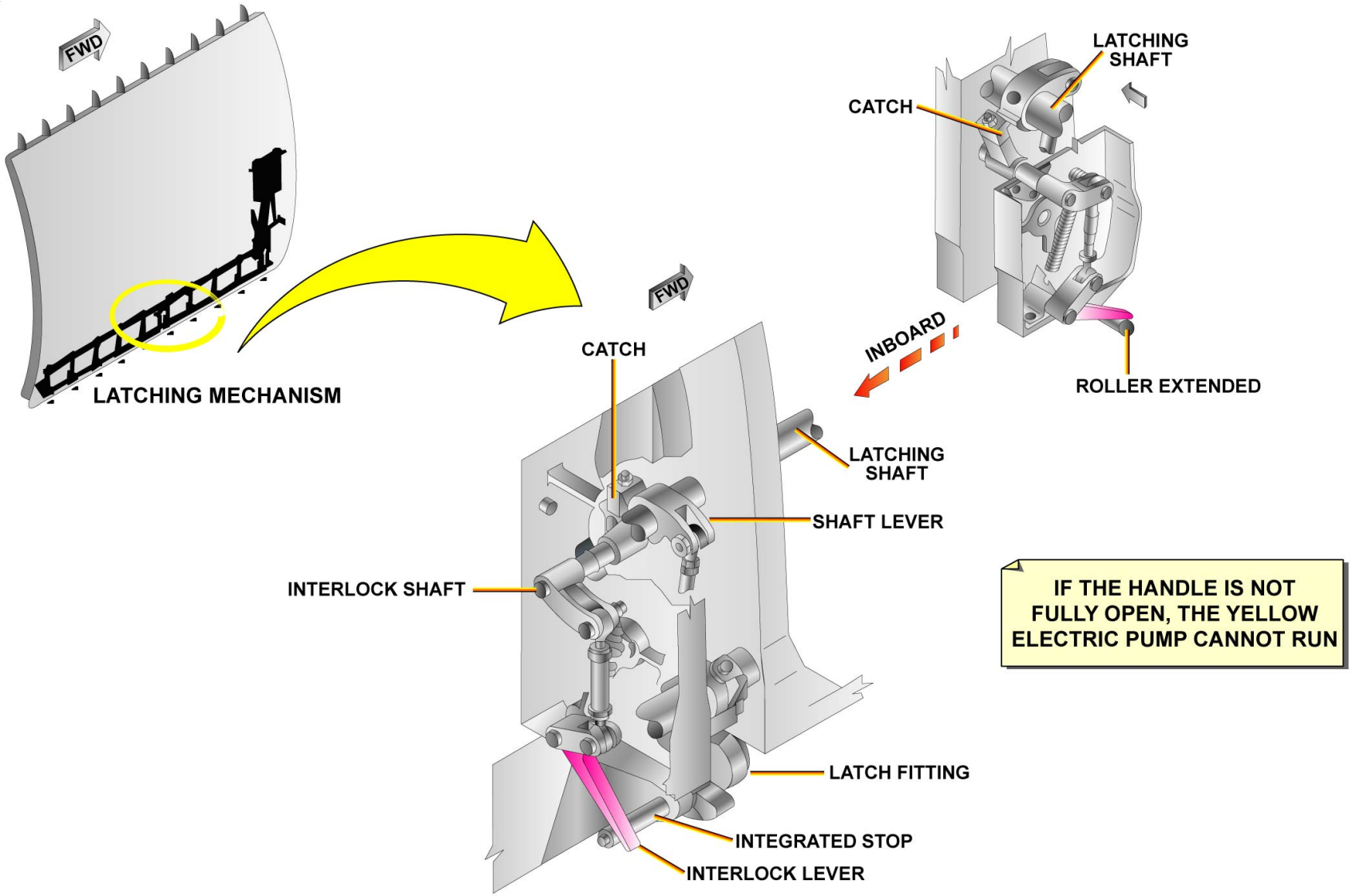

INTERLOCK MECHANISM

G7508471 - G3NT1T0 - FM52D5F52D60102

CARGO DOORS FWD AND AFT HYDRAULIC SYSTEM D/O (3)

GENERAL

The cargo-compartment door hydraulic-system controls the operation of the FWD and aft cargo-compartment doors. The hydraulic system of each door has a hydraulic actuator and a manual selector valve, but the yellow electric pump, the electric selector valve, the hand pump and the double check valve are common to both cargo doors.

NOTE: The double check valve depressurizes the cargo door system after operation and prevents loss of reservoir pressure and hydraulic fluid after a leak.
When the normal cargo door operating system is in use the yellow hydraulic flight control system operation is inhibited through the Hydraulic System Monitoring Unit (HSMU).

G7508471 - G3NT1T0 - FM52D6F52D70202

CARGO-COMPARTMENT DOOR HYDRAULIC SYSTEM

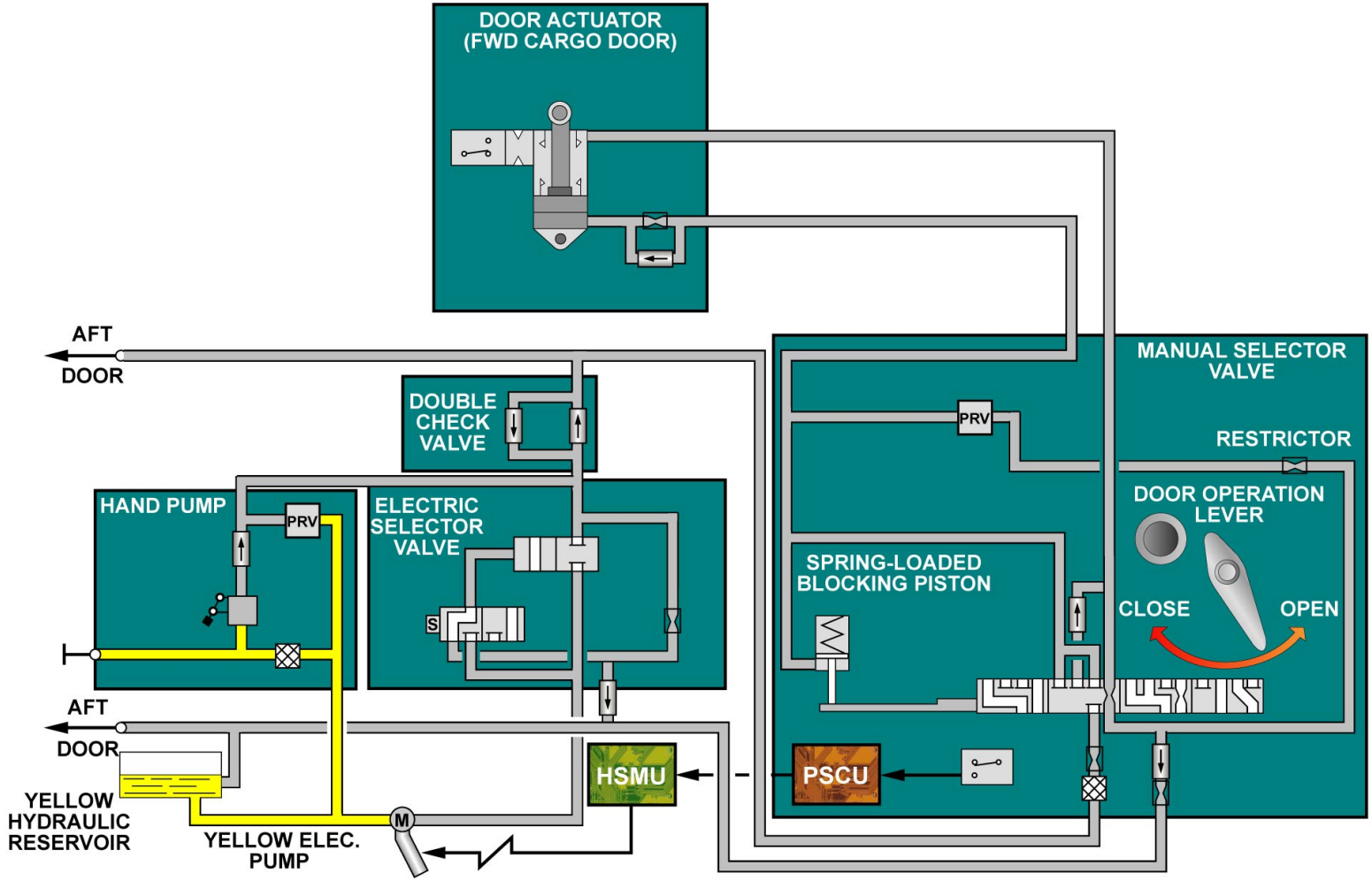

GENERAL

G7508471 - G3NT1T0 - FM52D6F52D70202

CARGO DOORS FWD AND AFT HYDRAULIC SYSTEM D/O (3)

NORMAL OPENING

PRECAUTIONS

Before opening a cargo door, it is necessary to make sure that the appropriate cargo-compartment door is unlocked and unlatched.

G7508471 - G3NT1T0 - FM52D6F52D70202

CARGO-COMPARTMENT DOOR HYDRAULIC SYSTEM

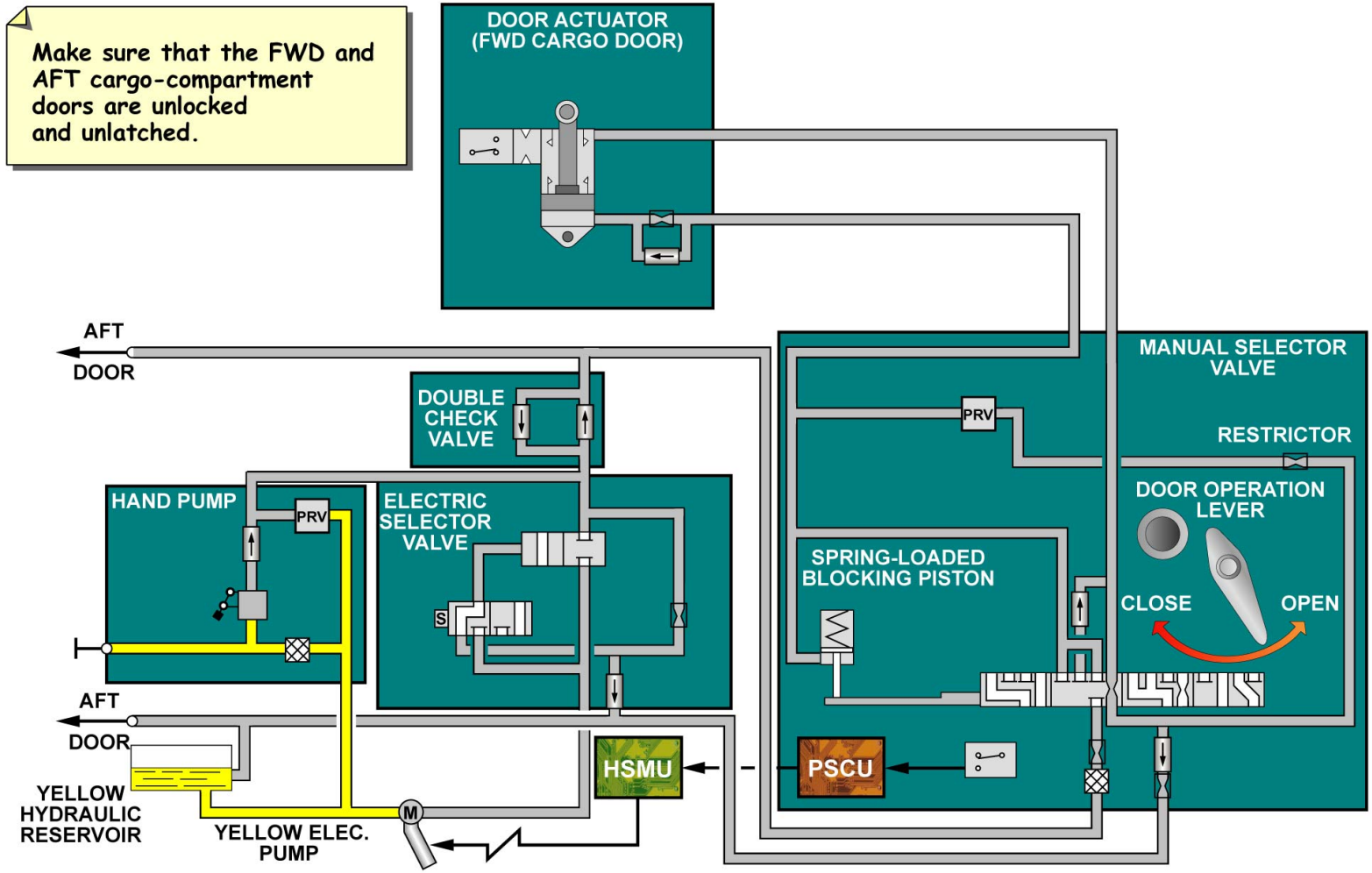

NORMAL OPENING - PRECAUTIONS

G7508471 - G3NT1T0 - FM52D6F52D70202

CARGO DOORS FWD AND AFT HYDRAULIC SYSTEM D/O (3)

NORMAL OPENING (continued)

HYDRAULIC SYSTEM ACTIVATION

To operate the door hydraulic system, set the door operation lever on the control panel to the OPEN position and hold it. This moves the manual selector valve to the extension position. Then, a signal is sent through the Proximity Switch Control Unit (PSCU) to the HSMU which starts the yellow electric pump to supply the hydraulic fluid.

G7508471 - G3NT1T0 - FM52D6F52D70202

CARGO-COMPARTMENT DOOR HYDRAULIC SYSTEM

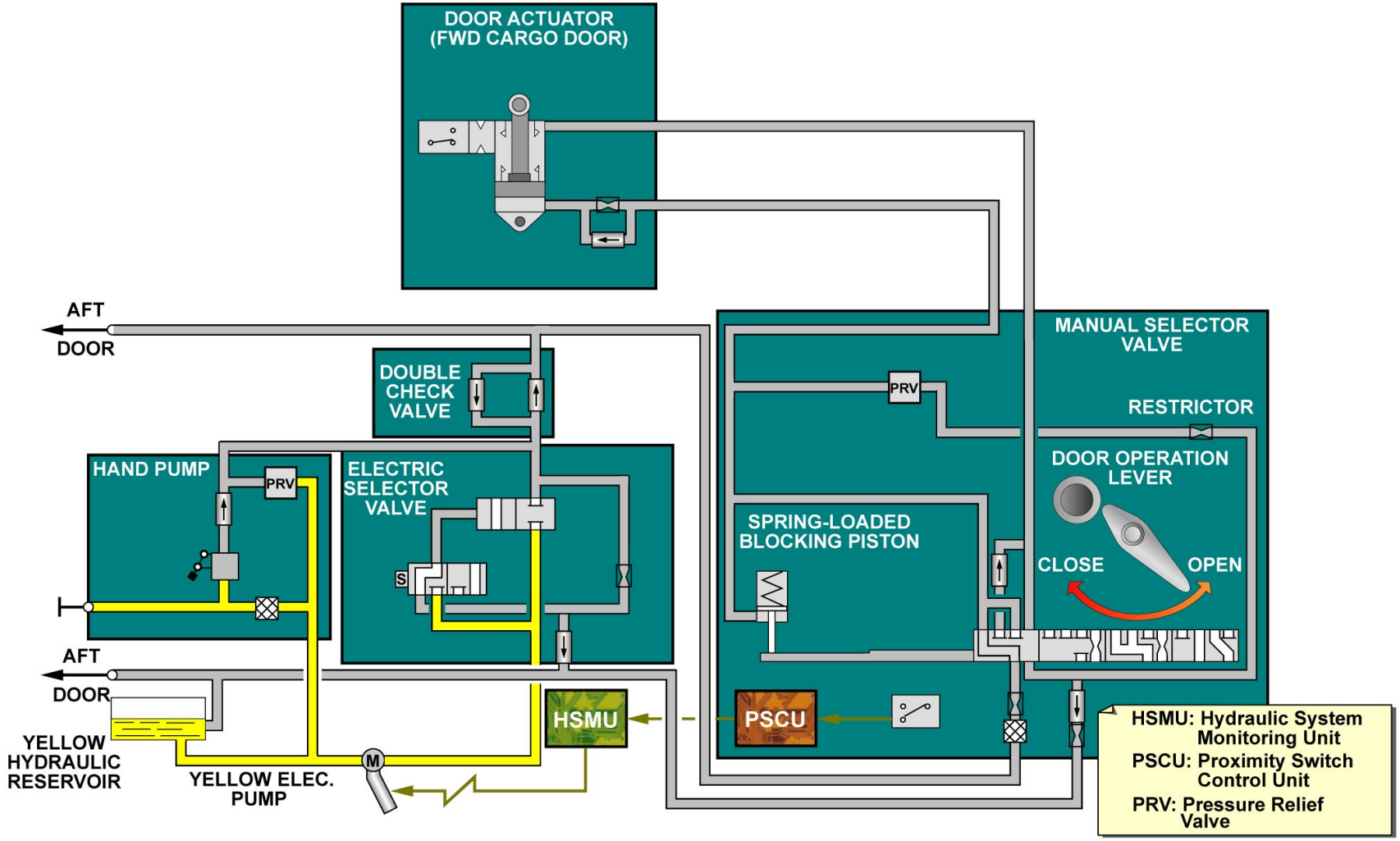

NORMAL OPENING - HYDRAULIC SYSTEM ACTIVATION

G7508471 - G3NT1T0 - FM52D6F52D70202

CARGO DOORS FWD AND AFT HYDRAULIC SYSTEM D/O (3)

NORMAL OPENING (continued)

ELECTRIC SELECTOR VALVE

The electric selector valve is energized open and releases the pressure to the manual selector valve.

G7508471 - G3NT1T0 - FM52D6F52D70202

CARGO-COMPARTMENT DOOR HYDRAULIC SYSTEM

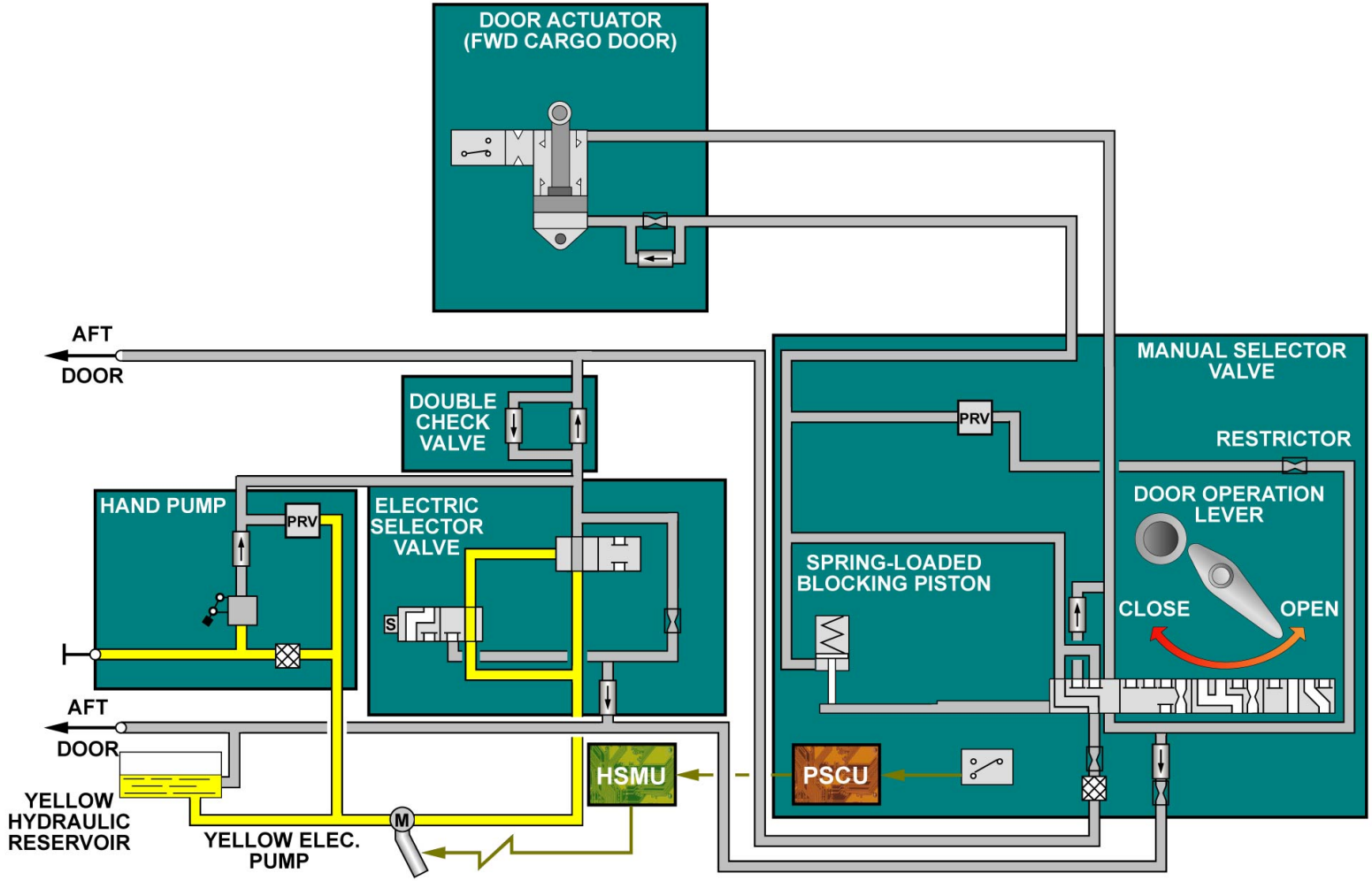

NORMAL OPENING - ELECTRIC SELECTOR VALVE

G7508471 - G3NT1T0 - FM52D6F52D70202

CARGO DOORS FWD AND AFT HYDRAULIC SYSTEM D/O (3)

NORMAL OPENING (continued)

EXTENDED POSITION

The door actuator extends and opens the cargo compartment door outwards. When the cargo compartment door is fully opened, the green indicator light on the control panel comes on to indicate that the door actuator is mechanically locked in its extended position.

G7508471 - G3NT1T0 - FM52D6F52D70202

CARGO-COMPARTMENT DOOR HYDRAULIC SYSTEM

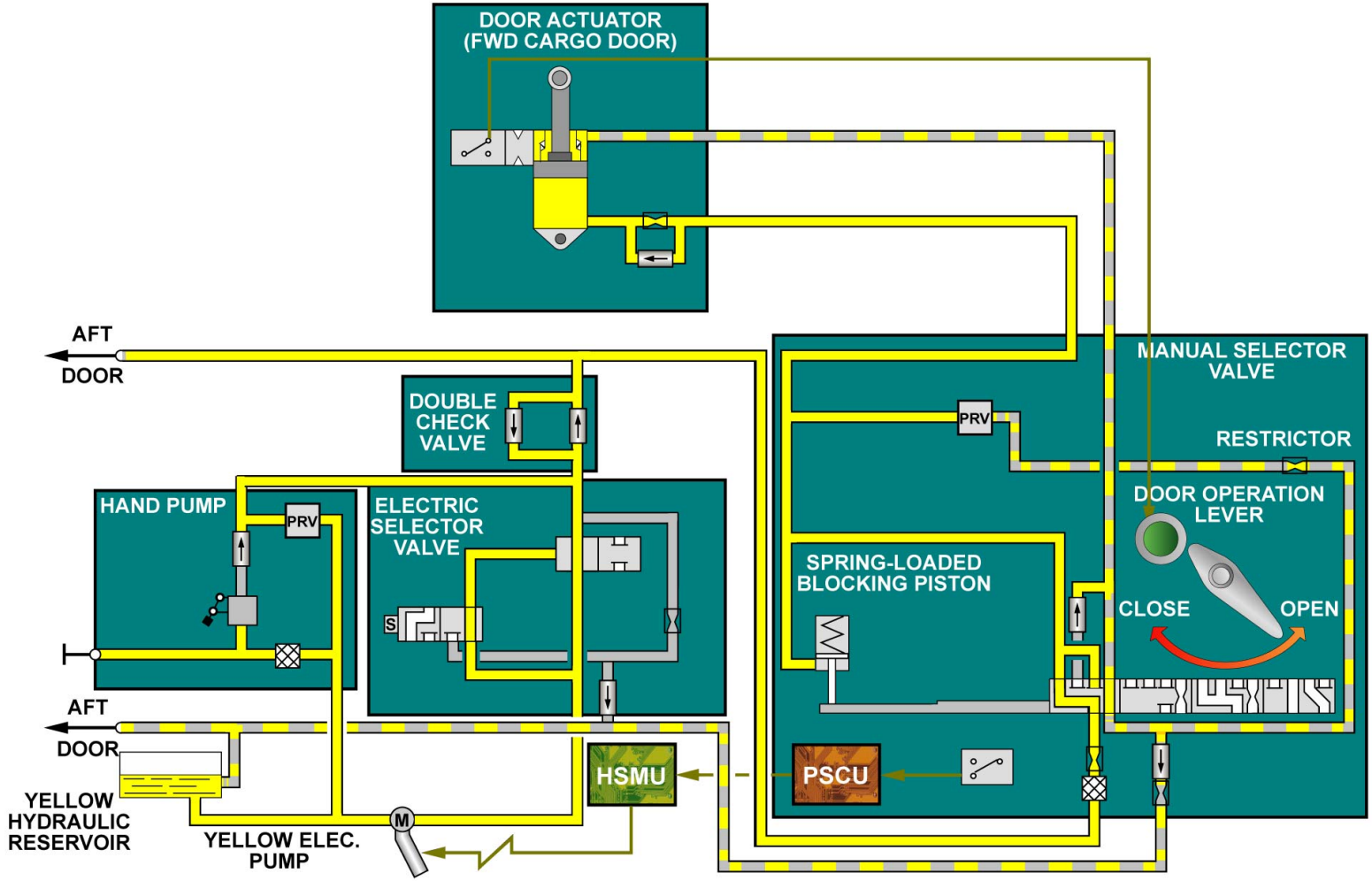

NORMAL OPENING - EXTENDED POSITION

G7508471 - G3NT1T0 - FM52D6F52D70202

CARGO DOORS FWD AND AFT HYDRAULIC SYSTEM D/O (3)

NORMAL CLOSING

PRECAUTIONS

Before operating the door hydraulic system make sure that the door sill latches are lifted. The door sill latches operate micro switches which either enable cargo door operation when in raised position, or cargo loading system operation when lowered.

G7508471 - G3NT1T0 - FM52D6F52D70202

CARGO-COMPARTMENT DOOR HYDRAULIC SYSTEM

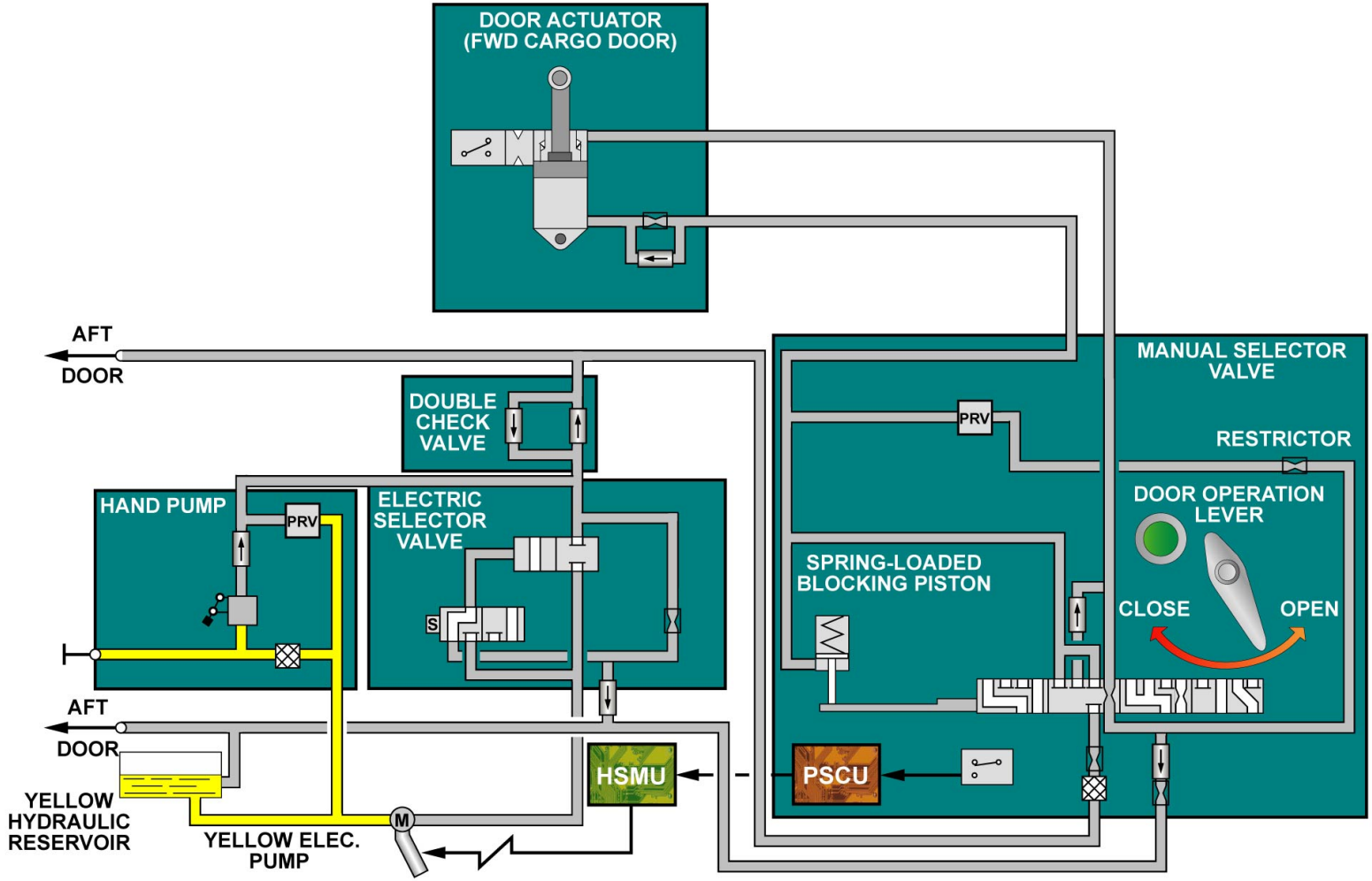

NORMAL CLOSING - PRECAUTIONS

G7508471 - G3NT1T0 - FM52D6F52D70202

CARGO DOORS FWD AND AFT HYDRAULIC SYSTEM D/O (3)

NORMAL CLOSING (continued)

HYDRAULIC SYSTEM ACTIVATION

The door operation lever is turned towards the CLOSE position and it stops in the intermediate position then the pump starts.

G7508471 - G3NT1T0 - FM52D6F52D70202

CARGO-COMPARTMENT DOOR HYDRAULIC SYSTEM

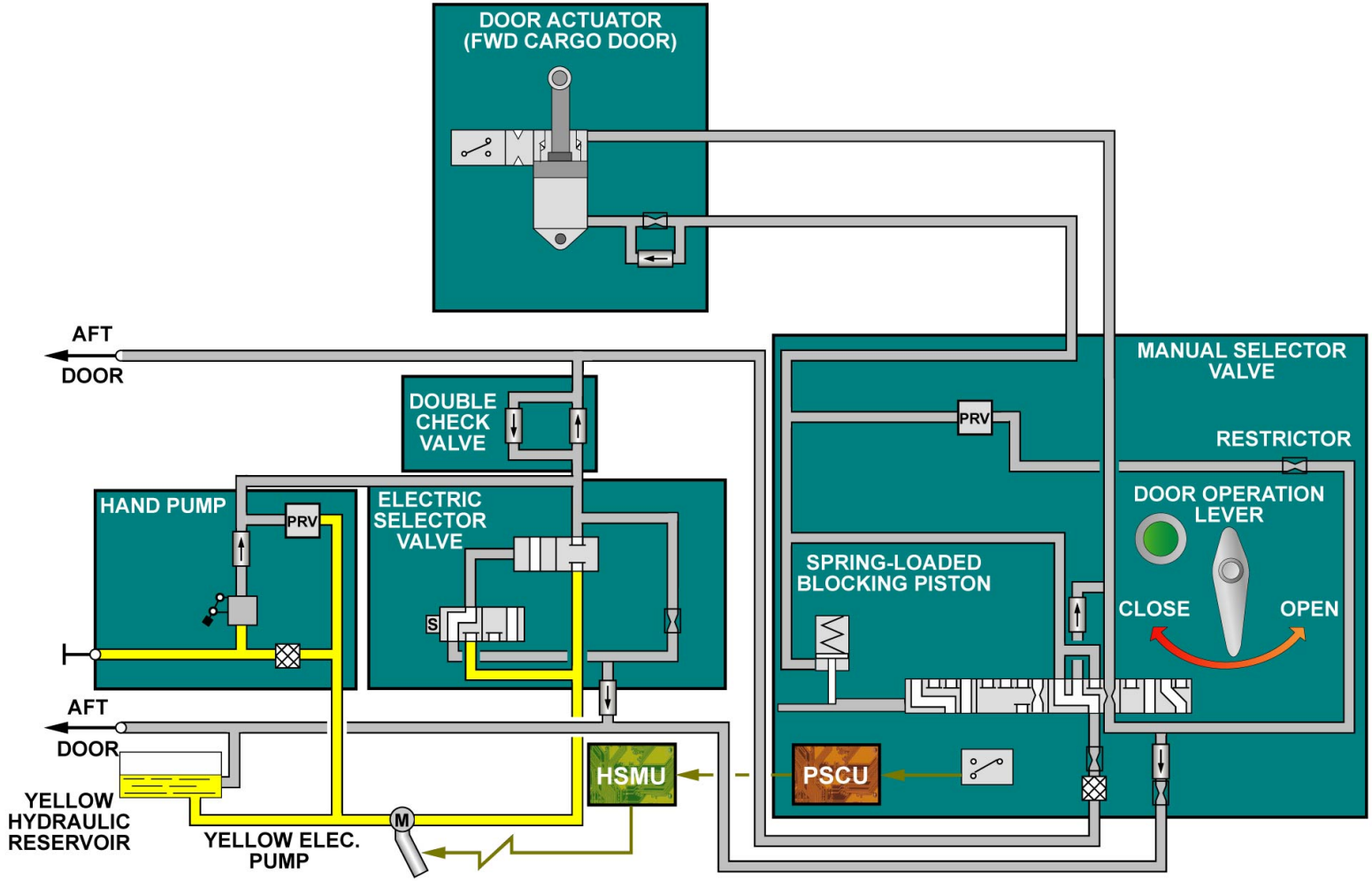

NORMAL CLOSING - HYDRAULIC SYSTEM ACTIVATION

G7508471 - G3NT1T0 - FM52D6F52D70202

CARGO DOORS FWD AND AFT HYDRAULIC SYSTEM D/O (3)

NORMAL CLOSING (continued)

ELECTRIC SELECTOR VALVE

The electric selector valve is energized open to release the pressure to the manual selector valve.

G7508471 - G3NT1T0 - FM52D6F52D70202

CARGO-COMPARTMENT DOOR HYDRAULIC SYSTEM

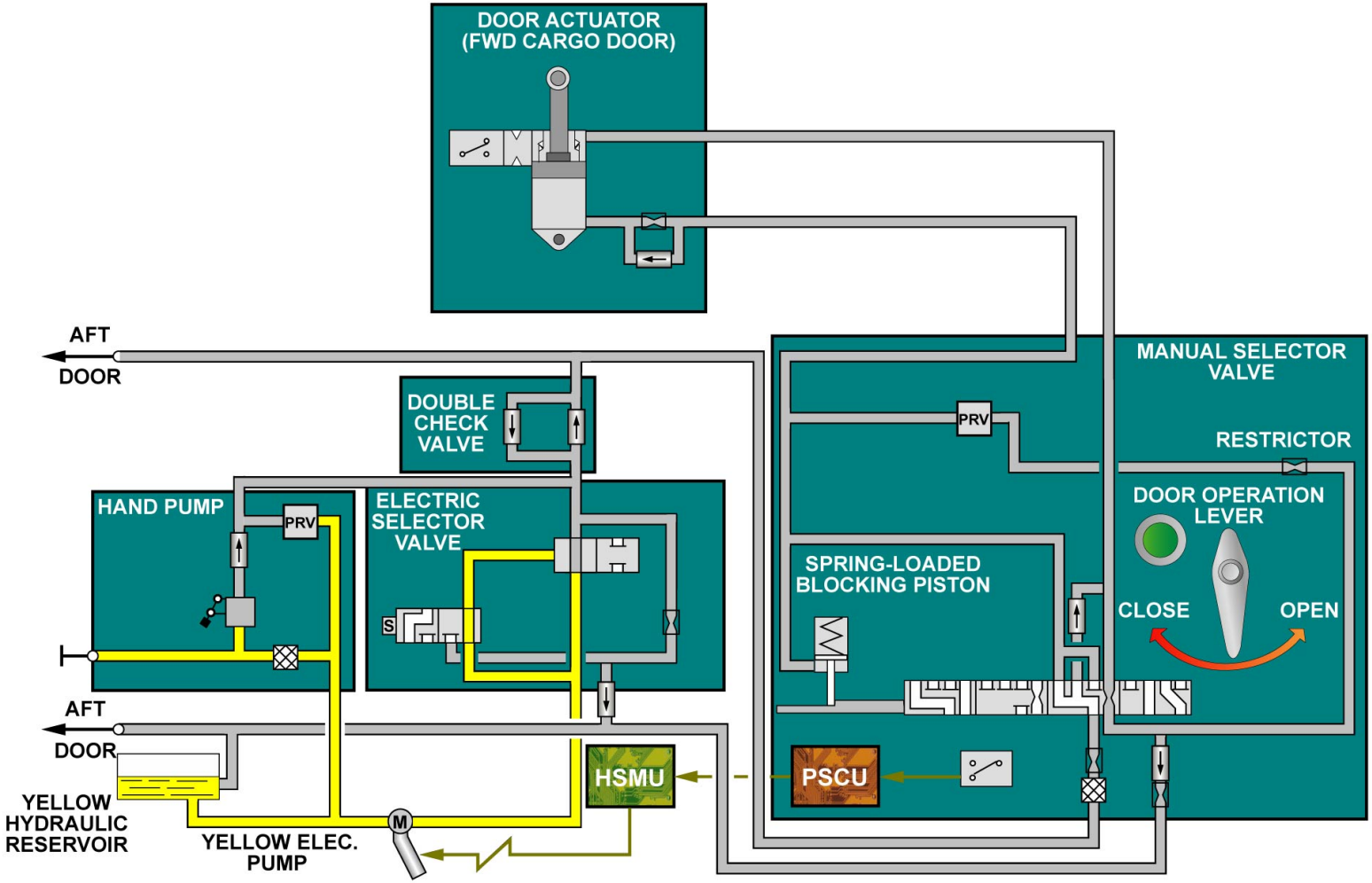

NORMAL CLOSING - ELECTRIC SELECTOR VALVE

G7508471 - G3NT1T0 - FM52D6F52D70202

CARGO DOORS FWD AND AFT HYDRAULIC SYSTEM D/O (3)

NORMAL CLOSING (continued)

INTERMEDIATE POSITION

The intermediate position is a safety position. The door actuator is first pressurized on both sides to prevent a sudden movement of the door when the actuator mechanical lock is released, what could cause a damage of the lock.

G7508471 - G3NT1T0 - FM52D6F52D70202

CARGO-COMPARTMENT DOOR HYDRAULIC SYSTEM

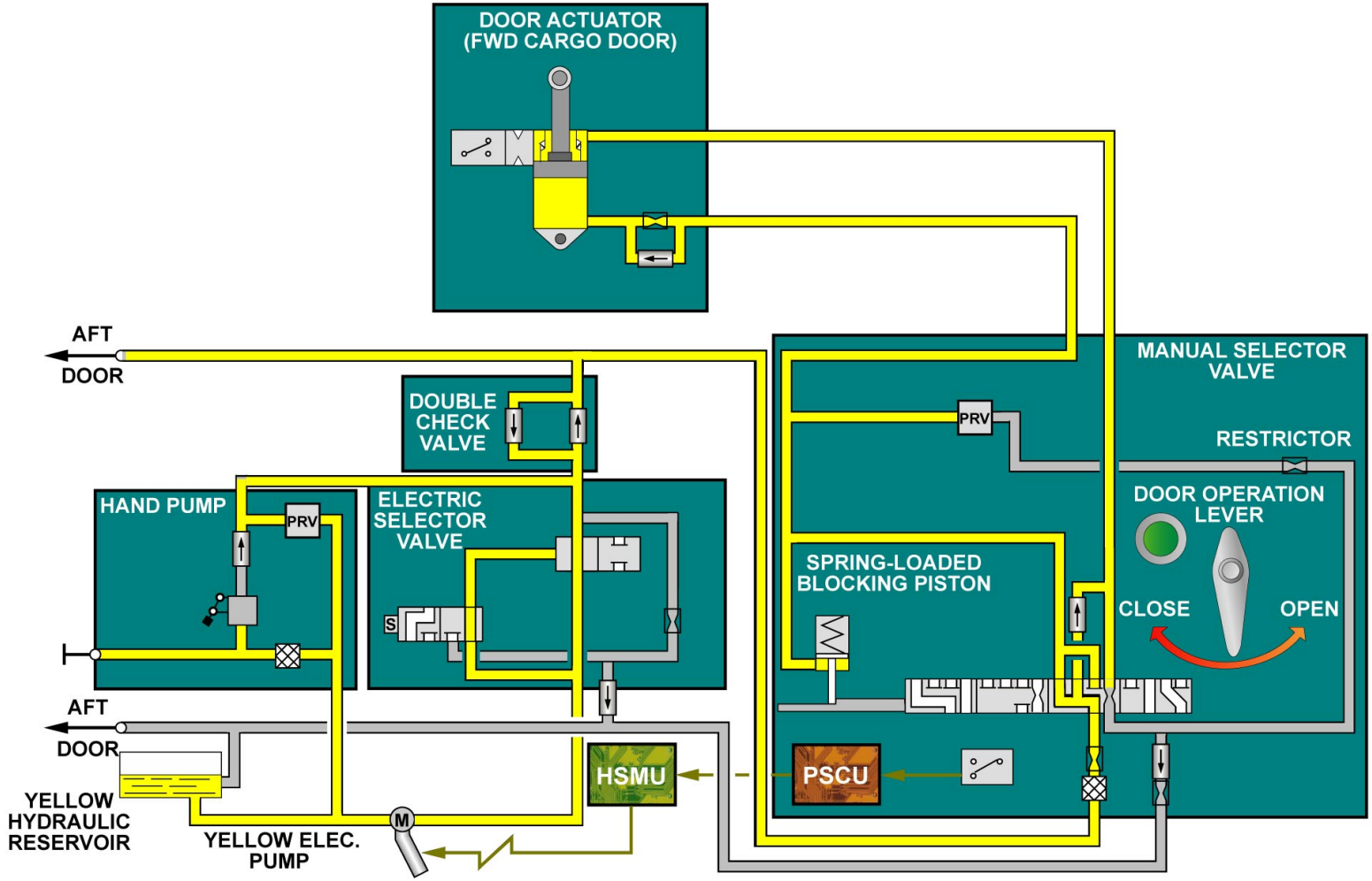

NORMAL CLOSING - INTERMEDIATE POSITION

G7508471 - G3NT1T0 - FM52D6F52D70202

CARGO DOORS FWD AND AFT HYDRAULIC SYSTEM D/O (3)

NORMAL CLOSING (continued)

SAFETY PRESSURE

When the pressure is then sufficient the blocking piston retracts and the manual selector valve can be moved further to the fully close position.

NOTE: The manual selector valve remains in the intermediate position until the pressure reaches 20 bars (290 psi) in the blocking piston.

G7508471 - G3NT1T0 - FM52D6F52D70202

CARGO-COMPARTMENT DOOR HYDRAULIC SYSTEM

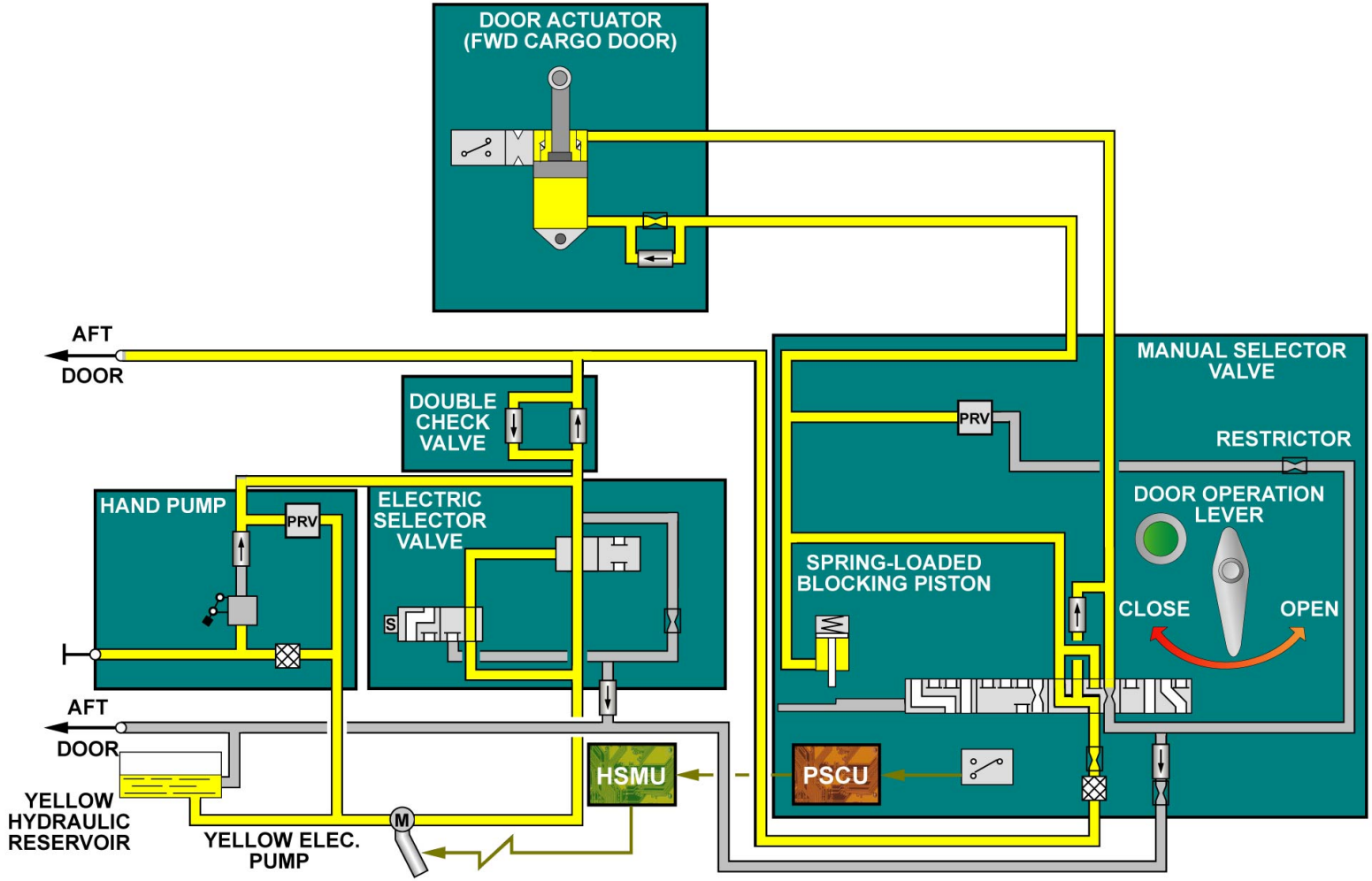

NORMAL CLOSING - SAFETY PRESSURE

G7508471 - G3NT1T0 - FM52D6F52D70202

CARGO DOORS FWD AND AFT HYDRAULIC SYSTEM D/O (3)

NORMAL CLOSING (continued)

CLOSED POSITION

The manual selector valve can move to supply the door actuator for closing.

NOTE: The door must be latched and locked within a minute to prevent re-opening due to internal leakage.

G7508471 - G3NT1T0 - FM52D6F52D70202

CARGO-COMPARTMENT DOOR HYDRAULIC SYSTEM

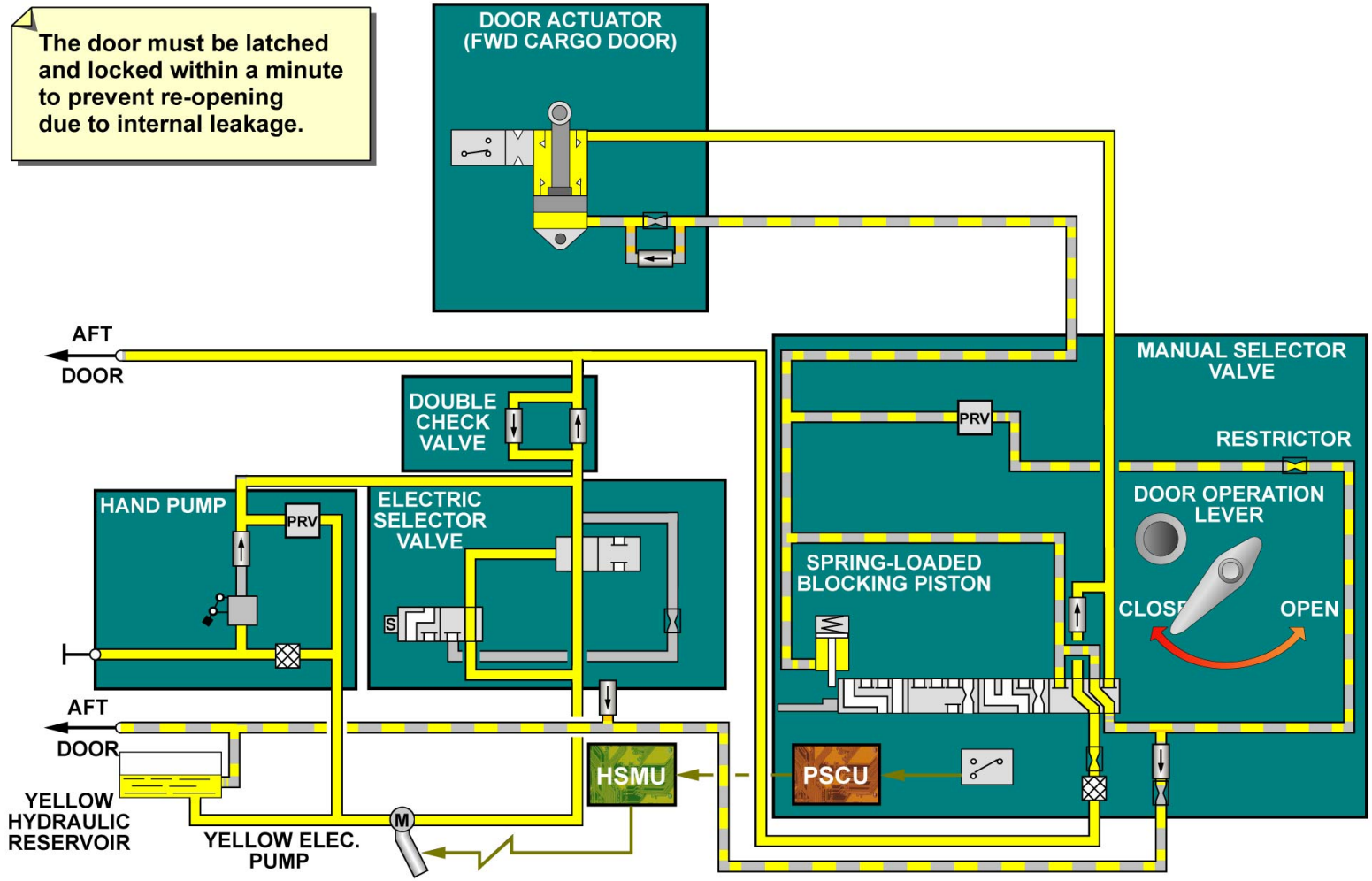

NORMAL CLOSING - CLOSED POSITION

G7508471 - G3NT1T0 - FM52D6F52D70202

CARGO DOORS FWD AND AFT HYDRAULIC SYSTEM D/O (3)

MANUAL OPERATION

With no electrical power available on the aircraft the yellow electric pump is not available, and the manual selector does not energize the electric selector valve. In this case the hand pump on the yellow hydraulic panel must be used to operate the door hydraulic system manually. A second person is needed to operate the hand pump. The operating handle for the hand pump has to be taken from the green hydraulic system service panel. The further operation for opening and closing is identical with the door normal operation.

G7508471 - G3NT1T0 - FM52D6F52D70202

CARGO-COMPARTMENT DOOR HYDRAULIC SYSTEM

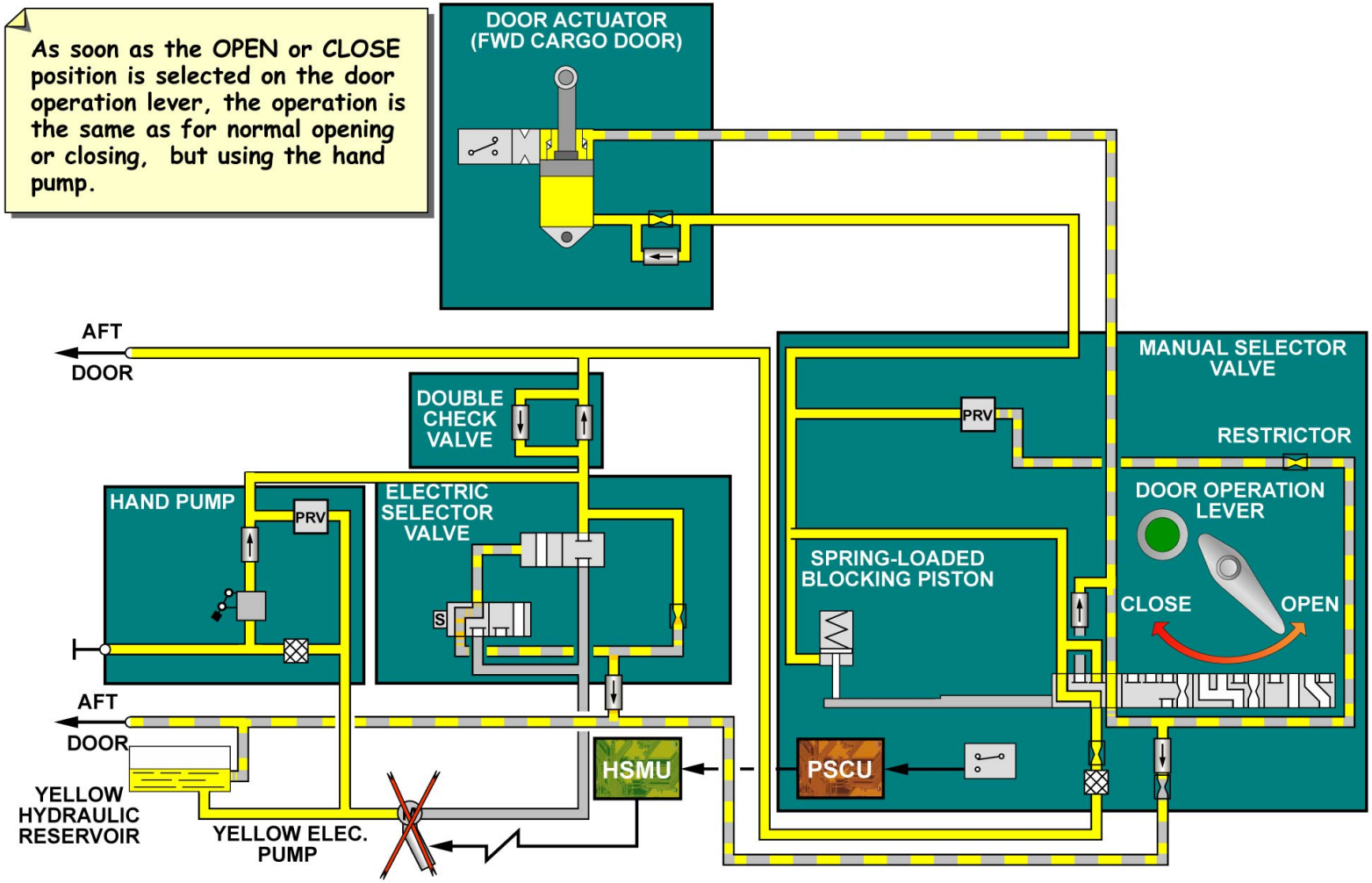

MANUAL OPERATION

G7508471 - G3NT1T0 - FM52D6F52D70202

CARGO DOORS FWD AND AFT HYDRAULIC SYSTEM D/O (3)

ACTUATOR OPERATION

GENERAL:
The cargo door actuator is a double-acting hydraulic actuator, which operates the cargo door for opening and closing.
Main features of this actuator are:
- An internal mechanical locking system to safely lock the cargo door in full open position.
- A locking detection system to indicate door full opening and locking on the control panel.
- A restrictor and a check valve at port A to provide similar operation speed during closing and opening despite cargo door weight.

ACTUATOR RETRACTED:
Actuator is fully retracted; cargo door is closed; actuator ports A and B are depressurized.
ACTUATOR EXTENSION/LOCKING:
Pressurizing port A of the actuator causes extension of the actuator and cargo door opening. When the locking clamp reaches the locking bushing, the locking clamp claws go underneath the lock of the locking bushing by flexibility.
ACTUATOR EXTENDED/LOCKED:
Further extension of the piston rod causes the locking clamp claws to push back the sleeve assembly against the spring. At the end of the piston rod travel the claws move apart releasing the sleeve assembly; the compressed spring pushes the sleeve assembly underneath the claws; the actuator is mechanically locked. The locking detection system is activated; the limit switch sends a signal to the control panel.
ACTUATOR UNLOCKING (STEP 1):
Ports A and B are pressurized simultaneously for a short time. The pressure applied from port B to the surface area of the sleeve assembly pushes the sleeve assembly against the spring; the actuator is unlocked and starts to slowly retract under the weight of the cargo door.
ACTUATOR UNLOCKING (STEP 2):
Port B remains pressurized while port A is depressurized. Actuator retracts; the locking clamp claws go underneath the stops of the locking bushing by flexibility. Door is closing. A restrictor installed at port A limits the operation speed to a set value.

G7508471 - G3NT1T0 - FM52D6F52D70202

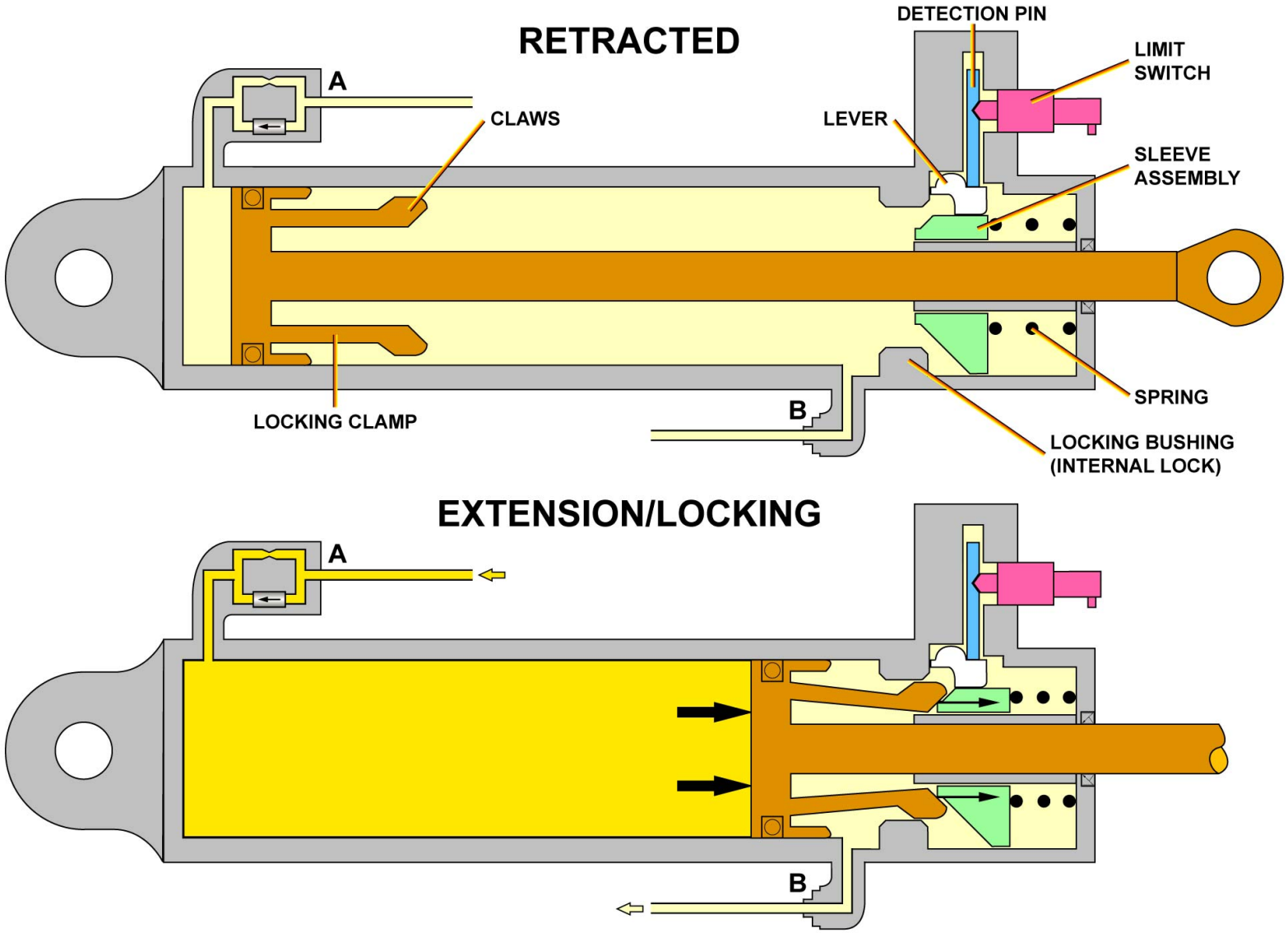

ACTUATOR OPERATION

G7508471 - G3NT1T0 - FM52D6F52D70202

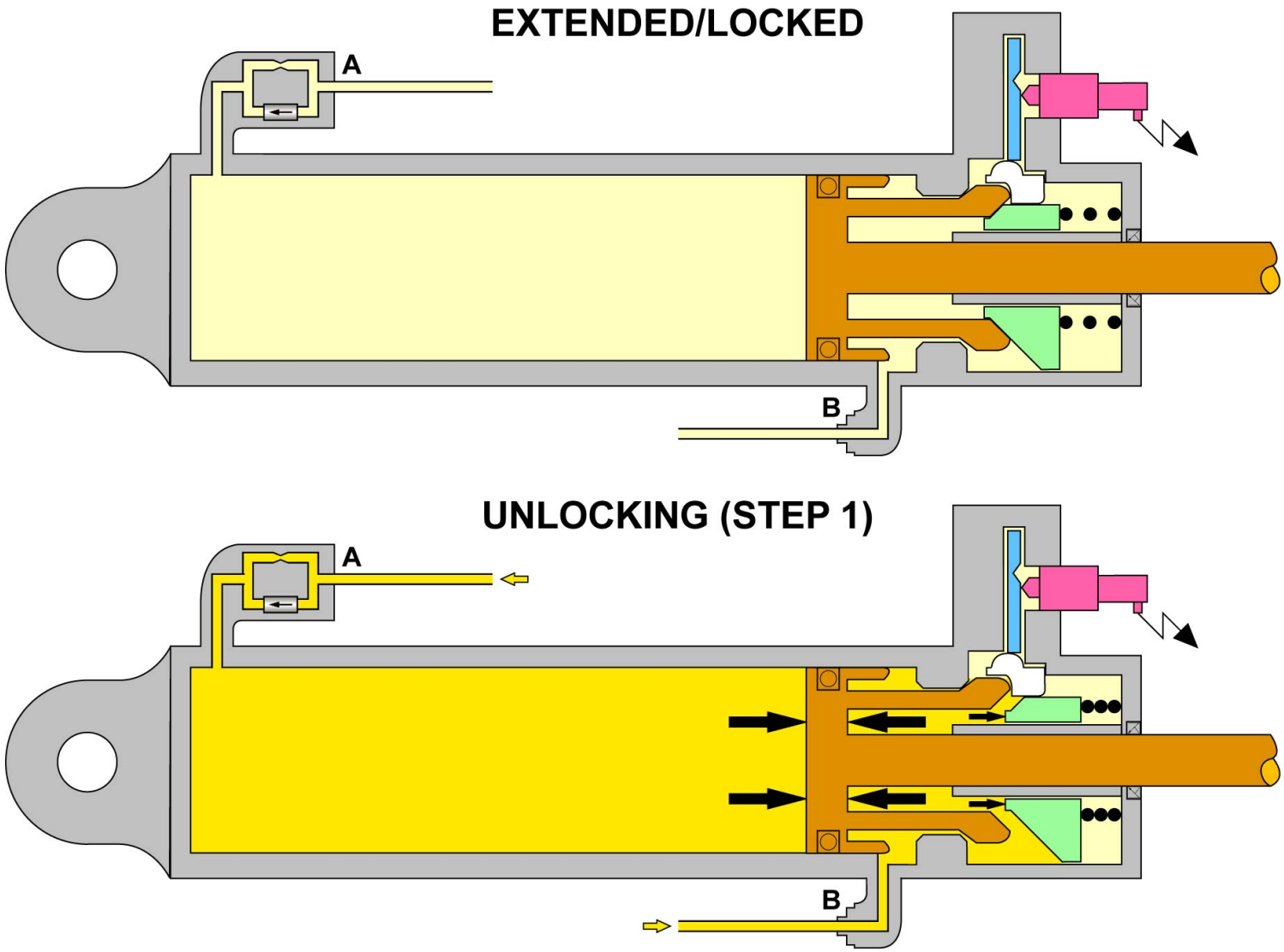

ACTUATOR OPERATION

G7508471 - G3NT1T0 - FM52D6F52D70202

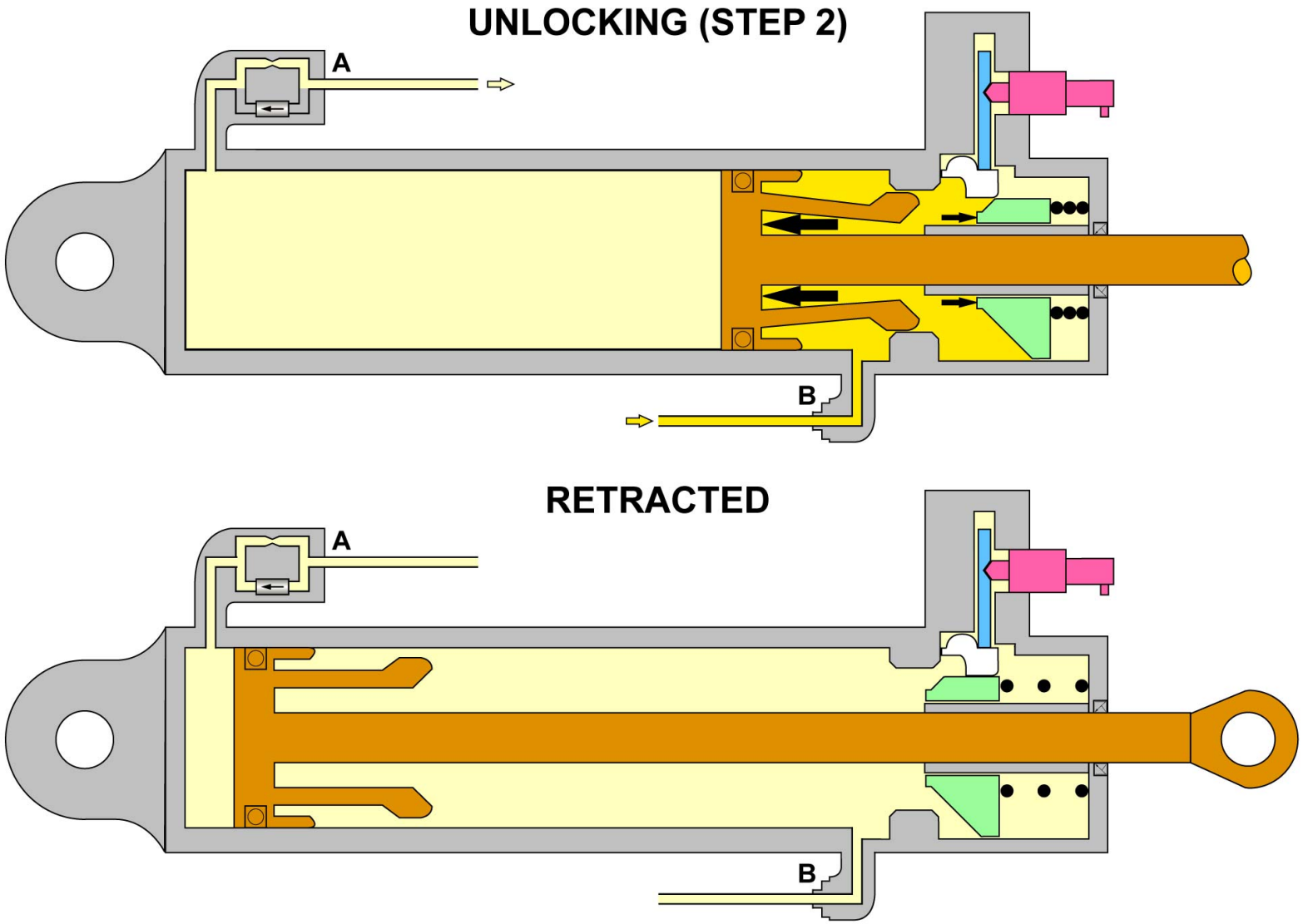

ACTUATOR OPERATION

G7508471 - G3NT1T0 - FM52D6F52D70202

COCKPIT DOORS D/O (3)

DOOR STRUCTURE AND ELEMENTS DESCRIPTION

The cockpit door structure is a honeycomb core bonded between two prepregnated sheets. Aluminum plates and aluminum profiles reinforce the edges of the door. An armored plate has the same lining as the passenger cabin and is installed to prevent damage. The door has a cut-out section in the door structure for the door escape hatch. In case of emergency the cockpit crew can leave the cockpit through this door escape hatch. The door escape hatch structure is the same as the door. The door escape hatch is equipped with a pneumatically operated mechanism that opens the hatch if a rapid decompression occurs in the cabin.
A piano hinge connects the cockpit door to the reinforced door frame structure. A three-latch mechanism is installed on the inner side of the cockpit door. The latches are connected together by adjustable tie-rods. The center latch mechanism has a spring-loaded D-ring assembly, which extends or retracts its internal latch tenon. A door handle, a spyglass and a magnetic door stop are fitted on the cockpit side door. A handgrip is located on the cabin side door.

G7508471 - G3NT1T0 - FM52DC000000002

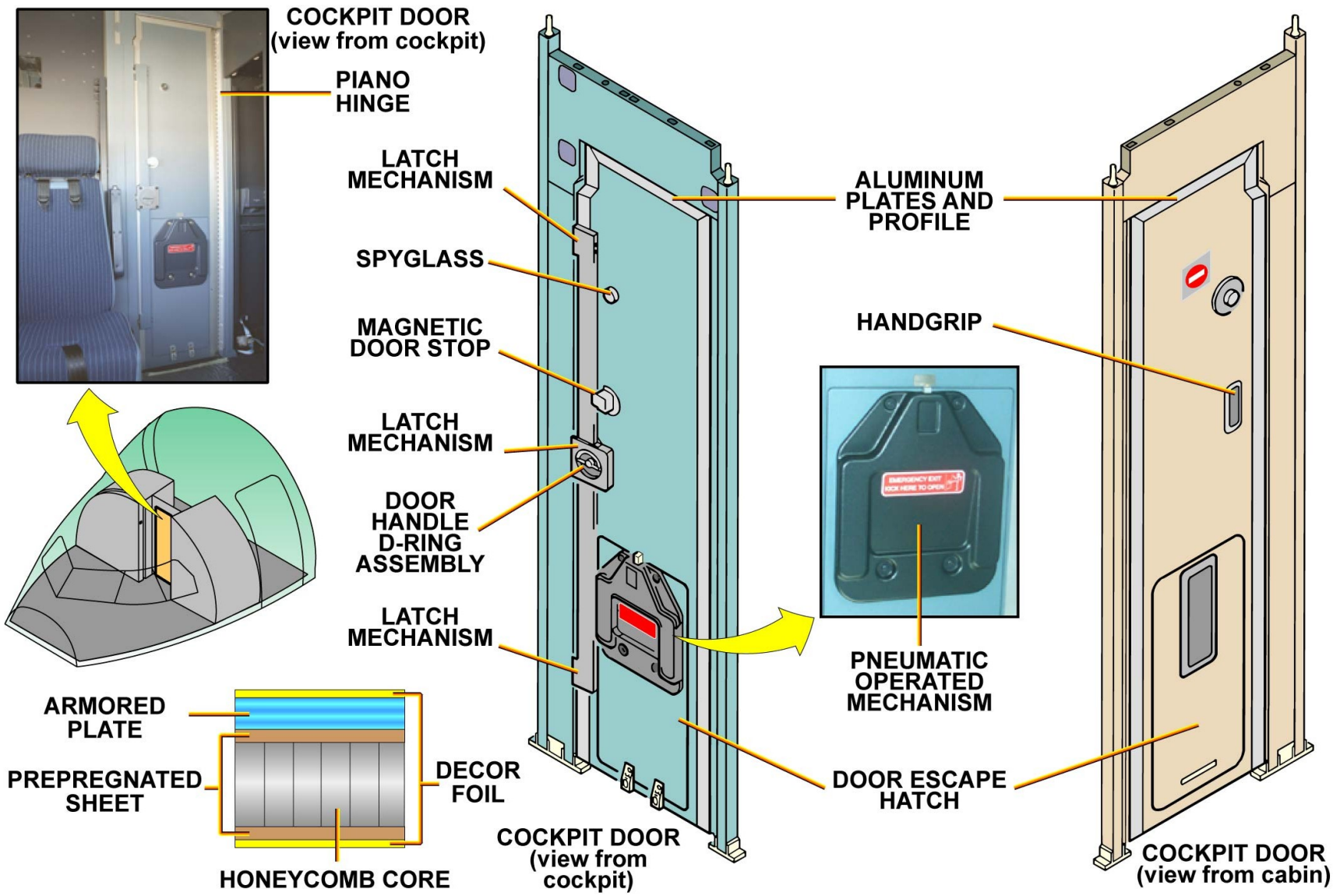

DOOR STRUCTURE AND ELEMENTS DESCRIPTION

G7508471 - G3NT1T0 - FM52DC000000002

COCKPIT DOORS D/O (3)

COCKPIT DOOR LOCKING SYSTEM (CDLS)

For cockpit security reason, the cockpit door is equipped with an electro-mechanically-operated release system: the Cockpit Door Locking System (CDLS). A keypad is installed on the RH cockpit door frame. It has a red LED, a green LED and twelve selection keys with numbers from 0 to 9, "*" and "#" symbols. An electrical buzzer is installed on the overhead panel. A signal from the control unit operates the buzzer.
An additional and optional switch is installed on the cockpit door panel and near each cabin attendant station in case of hijacking in the cabin. The cabin crew activates the alert by pressing one of the pushbutton located in each attendant 's area and then the buzzer sounds in the cockpit. The CAB ALERT pushbutton on the cockpit door panel comes on. When the cockpit crew pushes the alert pushbutton, the buzzer stops and the red alert light goes off.
A toggle switch is installed on the cockpit door panel, on the center pedestal. It is a three-position switch (UNLOCK, NORM and LOCK) spring-loaded to the neutral NORM position. To select the UNLOCK position, the switch must be pulled and maintained in the UNLOCK position until the door opens: it prevents an unwanted operation of the toggle switch. On the neutral position, the cockpit door is automatically locked. OPEN and FAULT amber indications are displayed on the cockpit door panel. The OPEN indication comes on amber when the cockpit door is open. The FAULT indication also comes on amber when there is a malfunction in the CDLS.
Three electrical release strikes are installed in the RH cockpit door frame. Each one is fitted with a solenoid and a microswitch for monitoring. When the solenoid is energized, the plunger extends and the catch is blocked. When the solenoid is de-energized, the plunger retracts and the catch is free. The center electrical release strike has an additional microswitch, which monitors the condition of the center latch mechanism. When its tenon does not engage in the catch, this causes the OPEN indication light to come on.
The control unit installed on the overhead panel manages the fault indications, time delays and door access through the control of the CDLS. To ensure functionality of the cockpit door release system under Minimum Equipment List (MEL) conditions, a second control unit is installed on the overhead panel, it is a back-up system. They have two internal pressure sensors, which de-energize the solenoids and unlock the door if a rapid decompression occurs in the cockpit. Note that only one sensor is necessary to activate the system. The microprocessor receives signals from the toggle switch and the keypad. It sends a signal to operate the buzzer, the indication light, the green LED or red LED of the keypad and the solenoids of the electrical release strikes.
If a pressure sensor fault occurs, the related CHAN 1 or CHAN 2 LED and the amber FAULT light come on. If a fault occurs in the electrical release strikes, detected by the corresponding microswitch, the related strike LED and the amber FAULT light come on.
The back-up system will be activated via an override switch named LKG SYS, under one of the following conditions:
- fault illuminated on the basic system due to CHAN 1 and CHAN 2 fault,
- basic system malfunction.

G7508471 - G3NT1T0 - FM52DC000000002

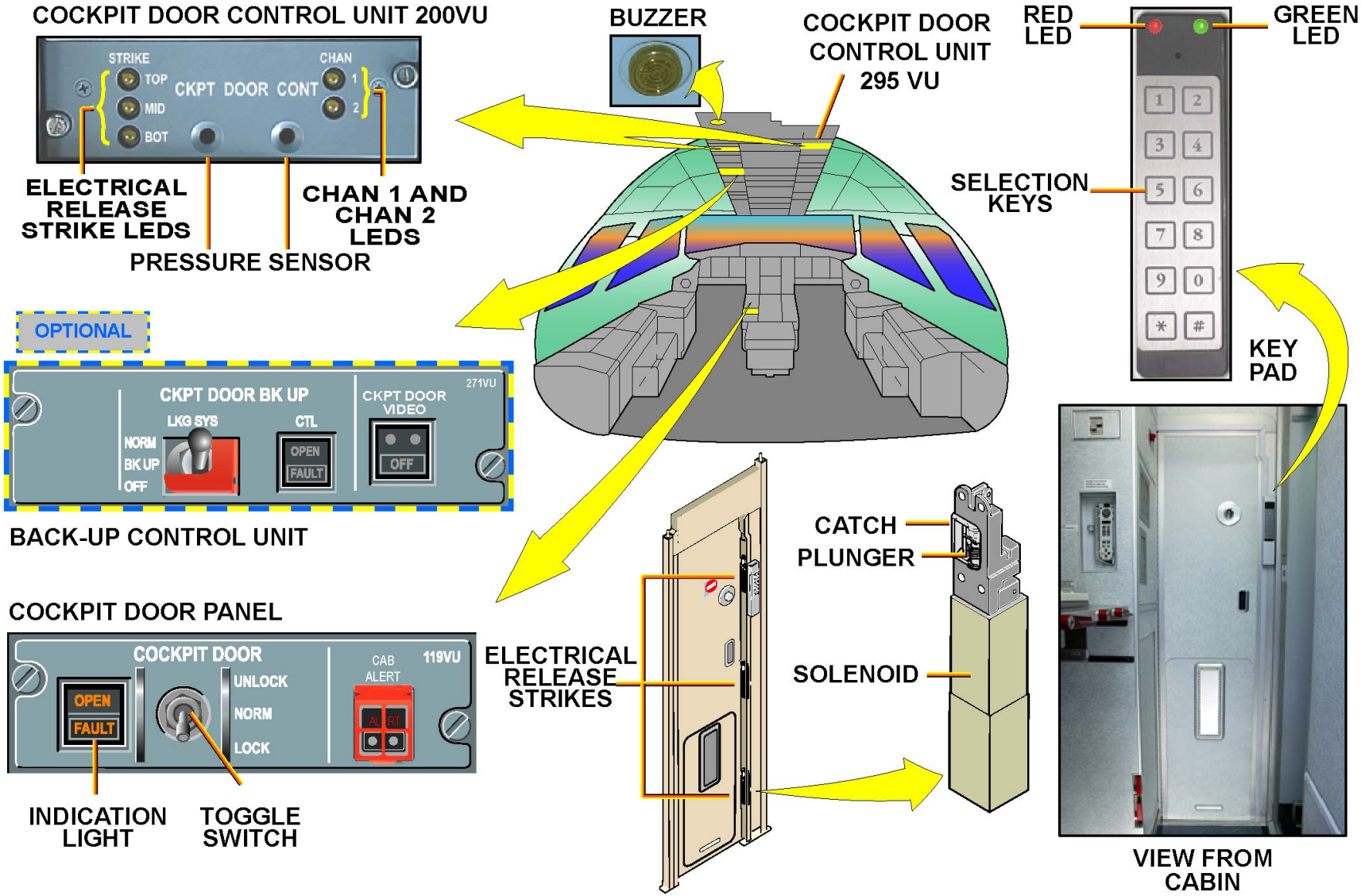

COCKPIT DOOR LOCKING SYSTEM (CDLS)

G7508471 - G3NT1T0 - FM52DC00000002

COCKPIT DOORS D/O (3)

DOOR OPENING MODES

If the CDLS is not energized, the cockpit door is unlocked, but remains closed. It can be opened either from the cockpit or from the cabin.
If the CDLS is energized, the cockpit door is locked and can be opened from the cockpit only.

CABIN TO COCKPIT - NORMAL OPERATION

Press "#" on the keypad. The buzzer rings to inform the flight crew that an access into the cockpit is requested. If the flight crew sets the toggle switch to the UNLOCK position:
- the control unit de-energizes the solenoids of the release strikes. The plungers retract and set the catches free,
- the control unit triggers the green LED on the keypad to show that the cockpit door is unlocked and access is available,
- the buzzer stops and the amber OPEN indication light on the cockpit door panel comes on.

The cockpit door can be opened and kept fully open with a magnetic stop. The OPEN indication light remains illuminated. If the flight crew sets the toggle switch to the LOCK position:
- the control unit keeps the solenoids of the release strikes energized. The plungers remain extended, so they block the catches.
- the control unit triggers the red LED on the keypad, to show that the cockpit door is locked and access to the cockpit is prohibited,
- the buzzer stops.

In this case, the operation of the keypad and the buzzer is prevented during a limited time (adjustable between 5 and 15 minutes). The flight crew can cancel this function if they set the toggle switch from the LOCK to the UNLOCK position.

COCKPIT TO CABIN - NORMAL OPERATION

Lift and turn the D-ring of the center latch mechanism to 90 degree; so its internal spring-loaded tenons retract. The tenons are disengaged from the catches of the electrical release strikes and the cockpit door can be opened.

G7508471 - G3NT1T0 - FM52DC000000002

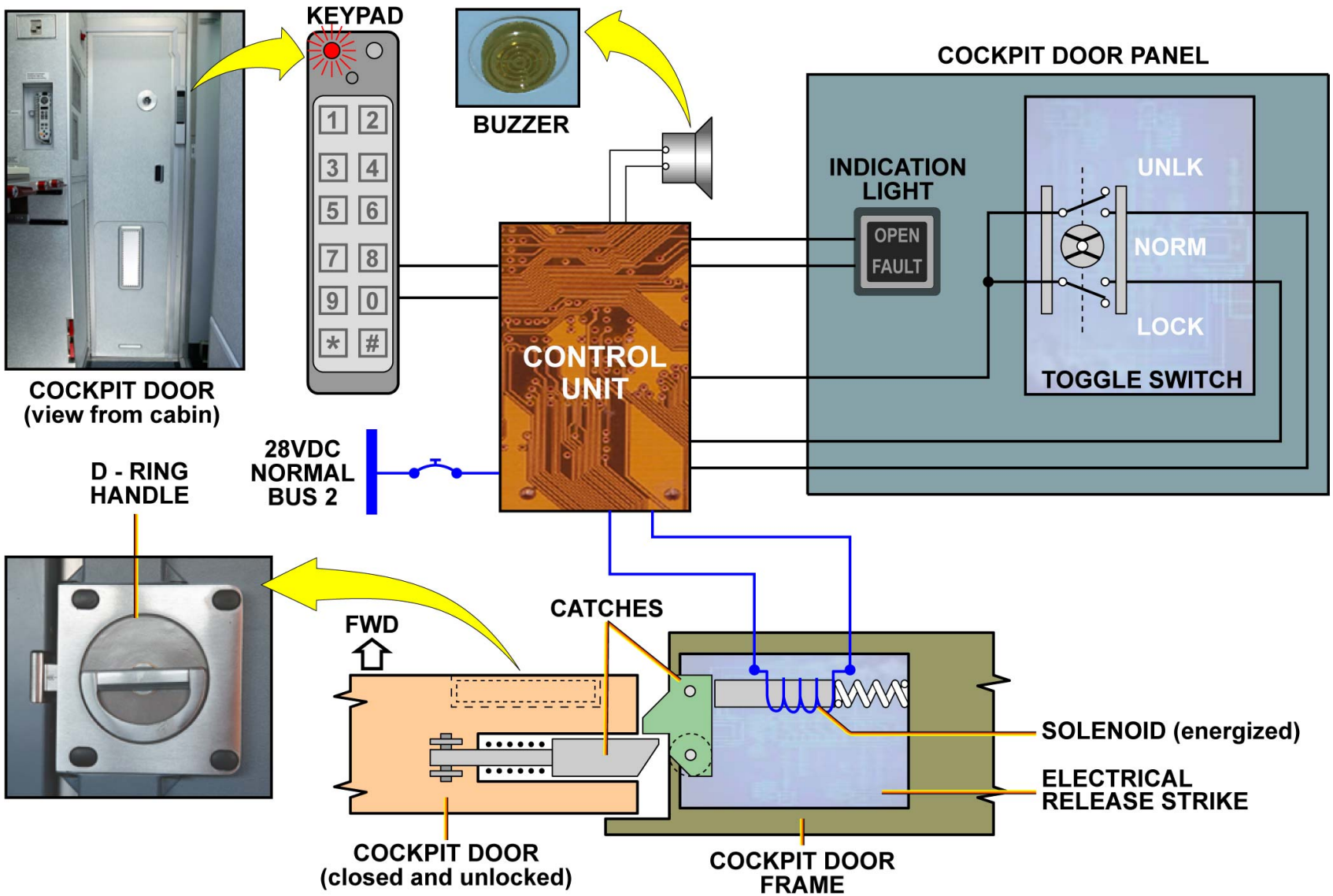

DOOR OPENING MODES - CABIN TO COCKPIT - NORMAL OPERATION & COCKPIT TO CABIN - NORMAL OPERATION

G7508471 - G3NT1T0 - FM52DC000000002

COCKPIT DOORS D/O (3)

DOOR OPENING MODES (continued)

CABIN TO COCKPIT - EMERGENCY OPERATION

Enter the four-digit emergency code and press "#" on the keypad. The buzzer rings continuously. The green LED flashes on the keypad. The OPEN indication light flashes on the cockpit panel. If the flight crew does not operate the toggle switch in a limited time (between 15 seconds and 2 minutes):
- the control unit de-energizes the solenoids of the release strikes. Then the plungers retract and set the catches free for 5 seconds,
- the control unit triggers the green LED for 5 seconds on the keypad, to show that the cockpit door is unlocked and the access is possible,
- the OPEN indication light comes on for 5 seconds,
- the buzzer stops.

The cockpit door can be opened and kept fully open with a magnetic stop. The OPEN indication light remains on. Otherwise following the cabin crew request to enter the cockpit, if the flight crew sets the toggle switch to the UNLOCK position in a limited time (between 15 seconds and 2 minutes):
- the control unit de-energizes the solenoids of the release strikes, the plungers retract and set the catches free,
- the control unit triggers the green LED to show that the cockpit door is unlocked and access is possible,
- the buzzer stops and the OPEN indication light on the cockpit door panel comes on.

The cockpit door can be opened and kept fully open with a magnetic stop. The OPEN indication light on the cockpit door panel remains on.

Following the cabin crew request to enter the cockpit, if the flight crew sets the toggle switch to the LOCK position in a limited time (between 15 seconds and 2 minutes):
- the control unit keeps the solenoids of the release strikes energized and the OPEN indication light stops flashing. The plungers remain extended and block the catches,
- the control unit triggers the red LED to show that the cockpit door is locked and access to the cockpit is prohibited,
- the buzzer stops.

In this case, the operation of the keypad and the buzzer is prevented during a limited time (adjustable between 5 and 15 minutes). The flight crew can cancel this function if they set the toggle switch from the LOCK to the UNLOCK position.

G7508471 - G3NT1T0 - FM52DC000000002

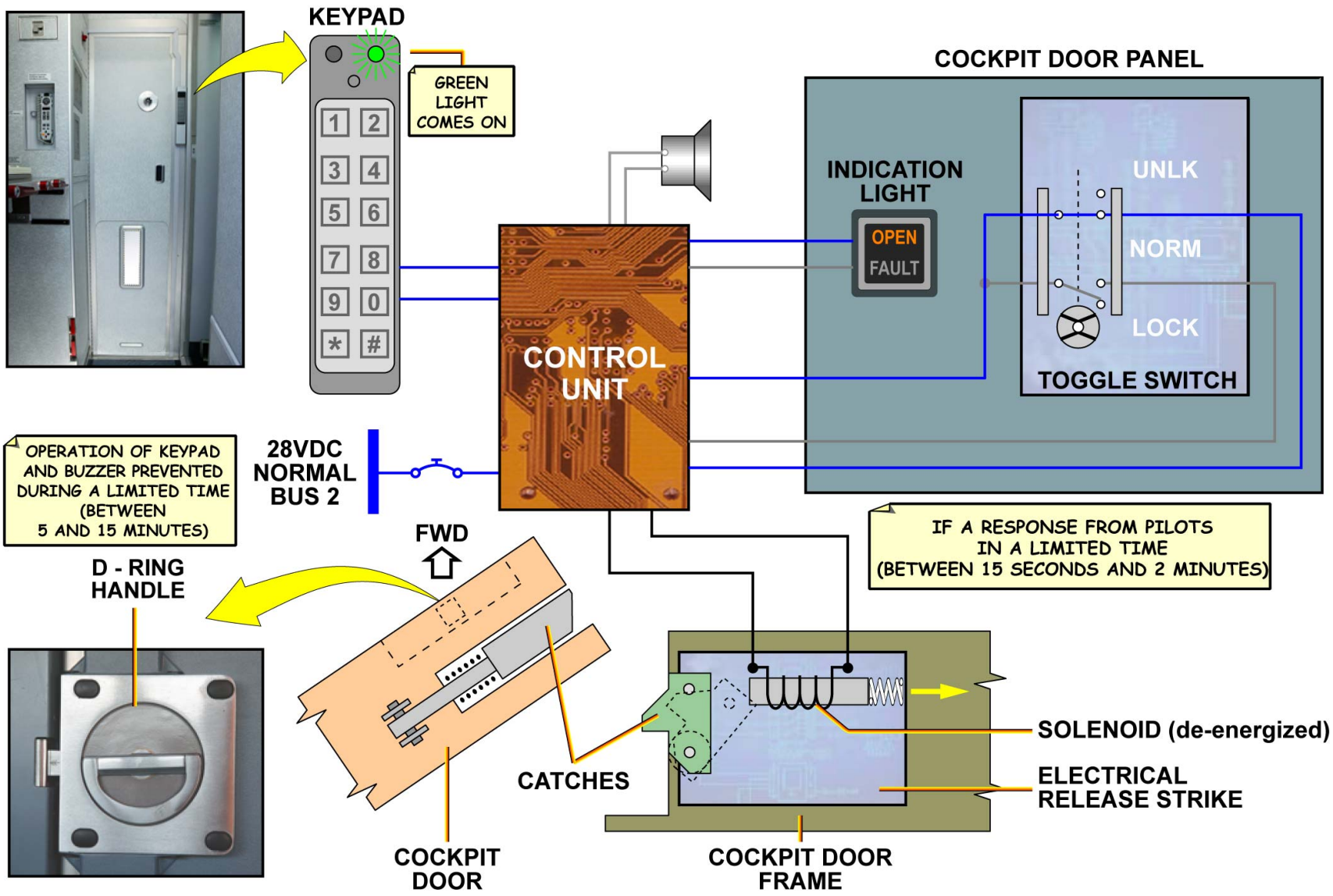

DOOR OPENING MODES - CABIN TO COCKPIT - EMERGENCY OPERATION

G7508471 - G3NT1T0 - FM52DC00000002

COCKPIT DOORS D/O (3)

DOOR OPENING MODES (continued)

BACK-UP SYSTEM

The Cockpit door locking Back-Up (CBUp) system is an optional system activated under Master Minimum Equipment List (MMEL) conditions when the normal CDLS failed. It ensures functionality of the cockpit door release system. The fault indication of one system is automatically inhibited when the other system is selected.

G7508471 - G3NT1T0 - FM52DC000000002

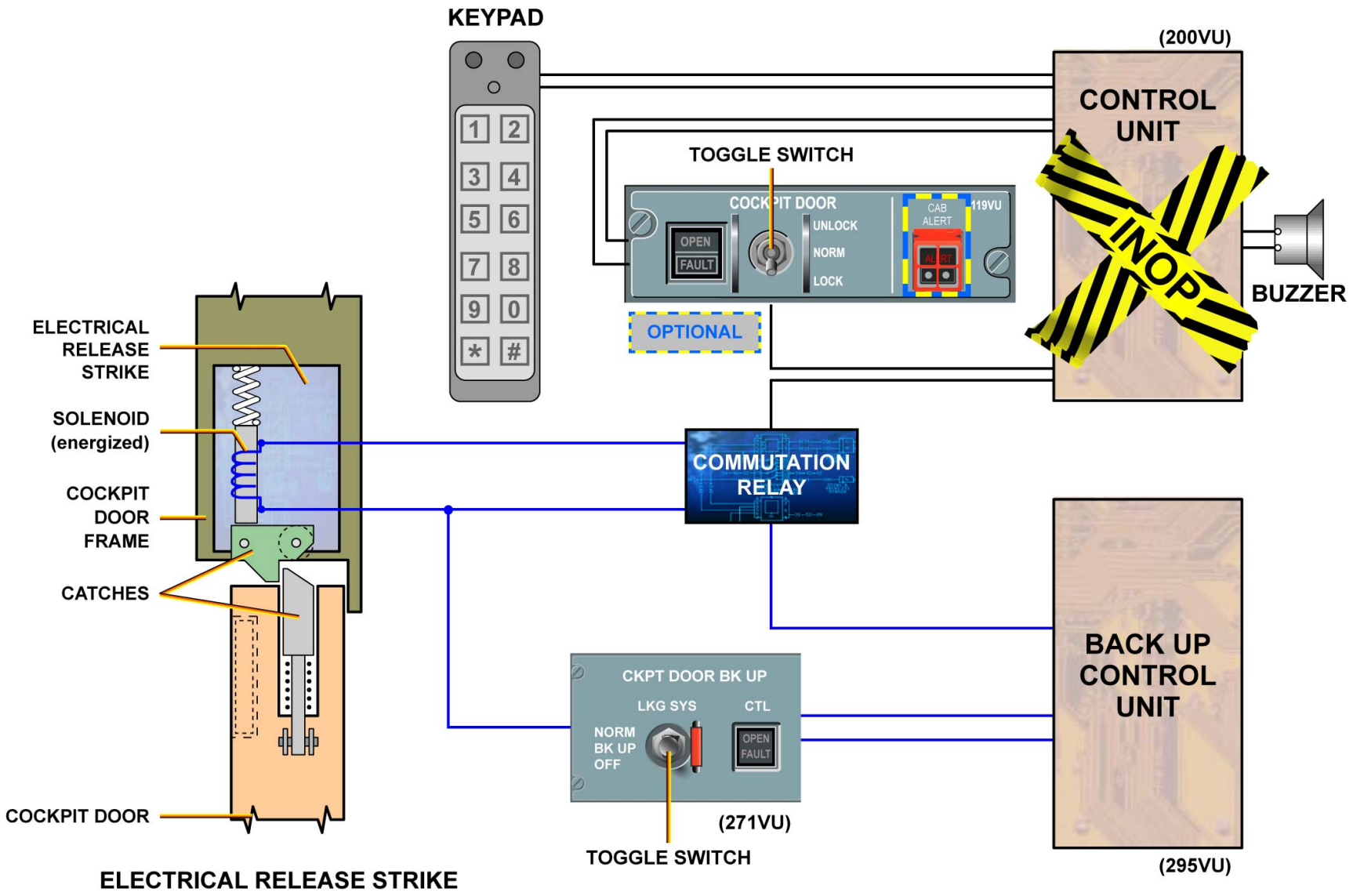

DOOR OPENING MODES - BACK-UP SYSTEM

G7508471 - G3NT1T0 - FM52DC000000002

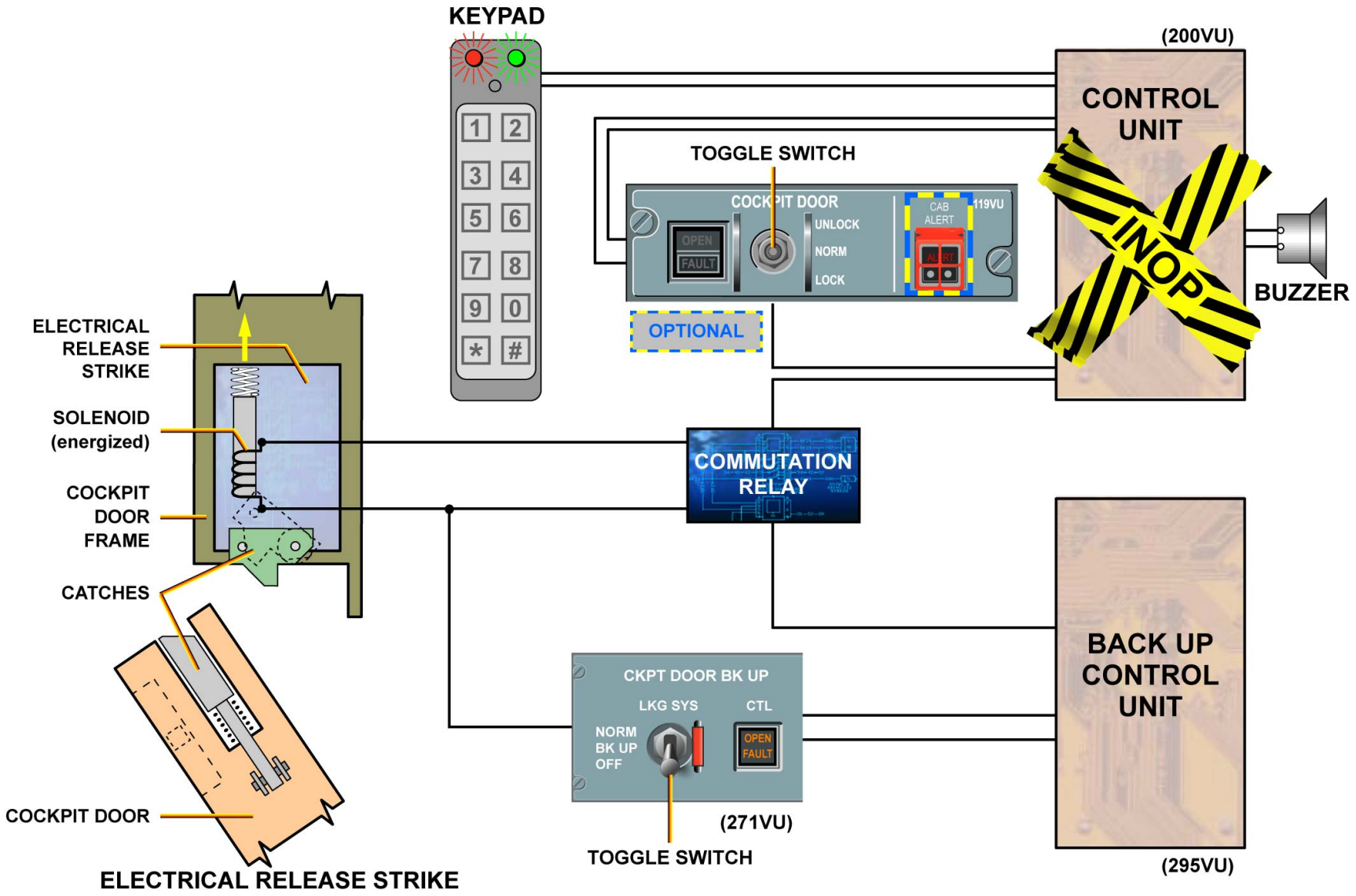

DOOR OPENING MODES - BACK-UP SYSTEM

G7508471 - G3NT1T0 - FM52DC00000002

This Page Intentionally Left Blank

G7508471 - G3NT1T0 - FM52DC000000002

COCKPIT DOORS D/O (3)

DOOR OPENING MODES (continued)

COCKPIT TO CABIN - EMERGENCY OPERATION

If the door is jammed and cannot be normally opened, the crew can remove the door escape hatch by kicking the housing of the escape hatch release mechanism.

G7508471 - G3NT1T0 - FM52DC000000002

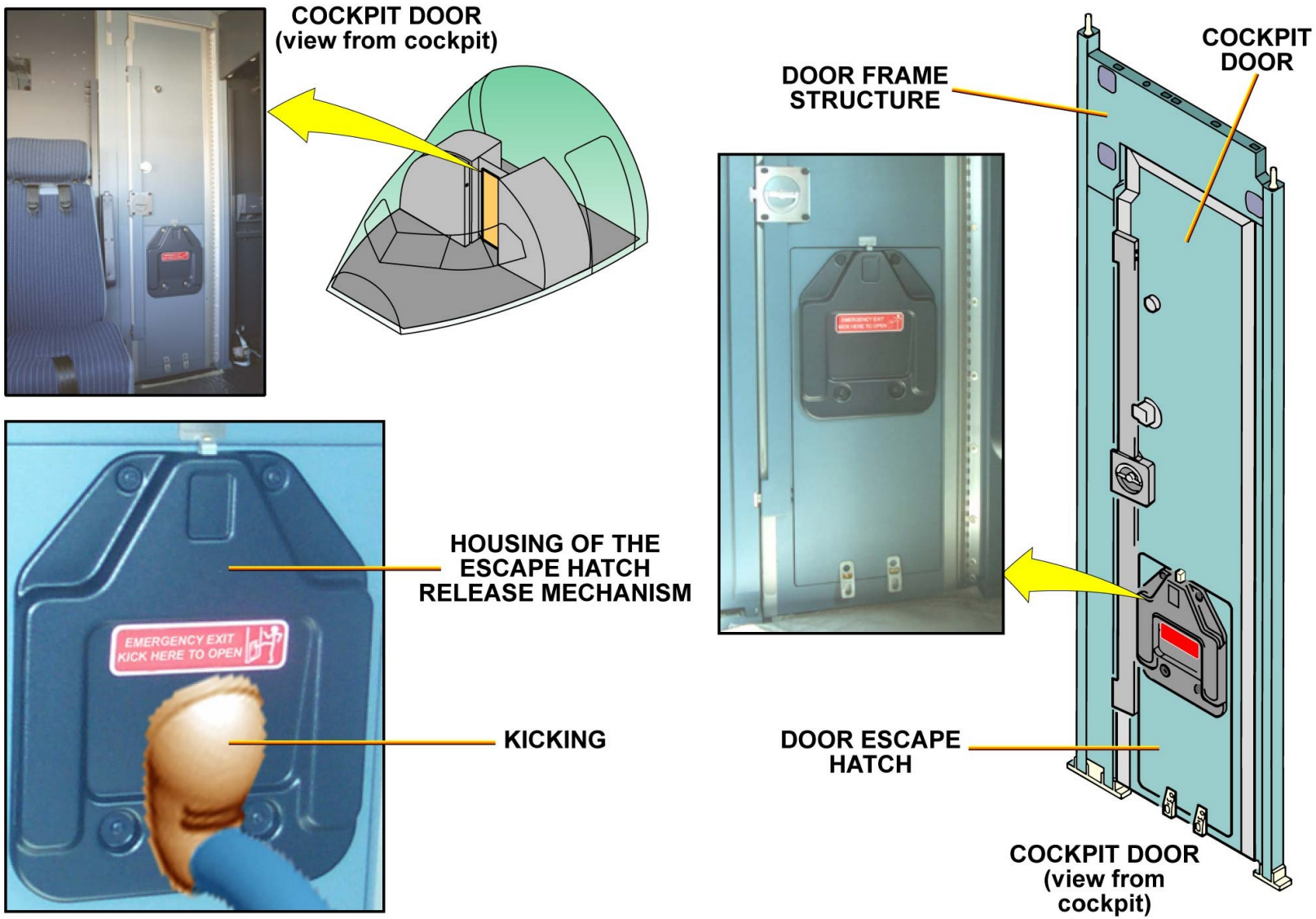

DOOR OPENING MODES - COCKPIT TO CABIN - EMERGENCY OPERATION

DOOR & SLIDE CONTROL SYSTEM PAX/CREW DOOR D/O (3)

GENERAL

Each passenger/crew door has three proximity sensors, which are part of:
- the door indicating and warning system,
- the escape slide indicating and warning system,
- the residual cabin pressure detection and indicating system.

G7508471 - G3NT1T0 - FM52D9F52G20202

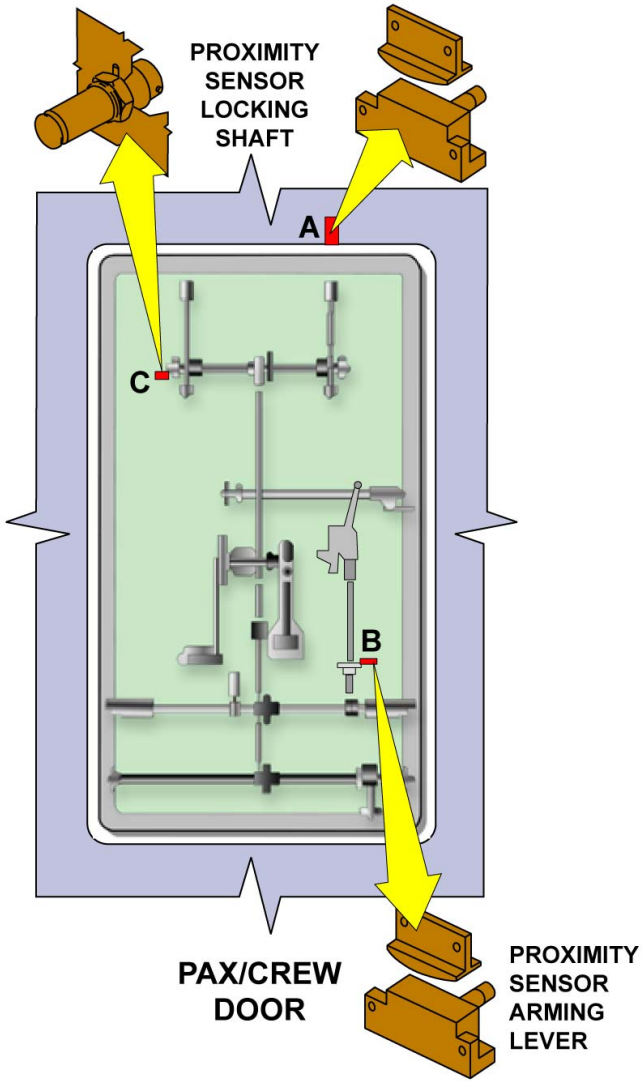

The door shown as example in this module is type "A" model.

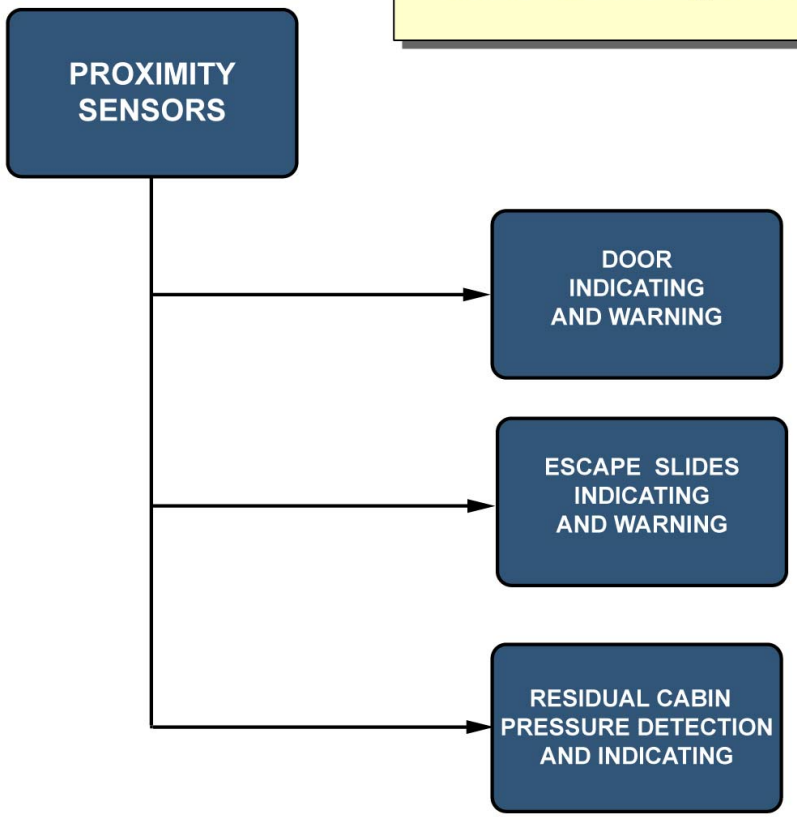

GENERAL

G7508471 - G3NT1T0 - FM52D9F52G20202

DOOR & SLIDE CONTROL SYSTEM PAX/CREW DOOR D/O (3)

DOOR INDICATING AND WARNING

The locking shaft and door frame proximity sensors give a door indication on the DOOR ECAM page via the door switch override and the Proximity Sensors Control Unit (PSCU).

LOCKING AND LATCHING

When the door is locked and latched, the proximity sensors are NEAR. The door is closed, the door symbol is green and there is no message on the DOOR ECAM page. In the cockpit on the overhead panel a pushbutton CAB/CRG DOO SW OVER is installed. With this pushbutton the crew can override a proximity switch of a door, which is shown as "OPEN" on the ECAM System Display using a dedicated override procedure. In case of a door "OPEN" message on the ECAM System Display it is possible to identify the sensor and the maintenance message.

G7508471 - G3NT1T0 - FM52D9F52G20202

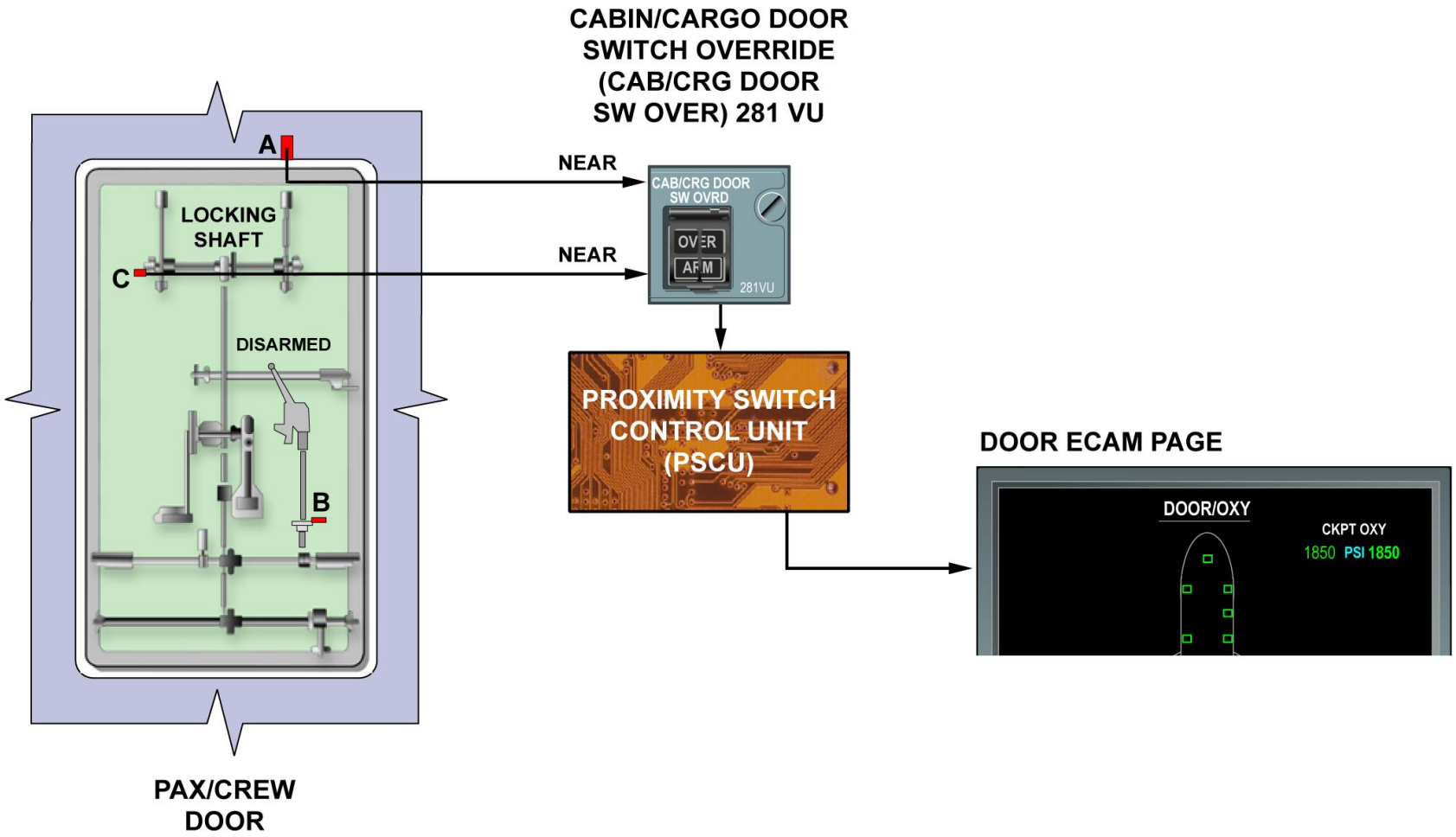

DOOR INDICATING AND WARNING - LOCKING AND LATCHING

G7508471 - G3NT1T0 - FM52D9F52G20202

DOOR & SLIDE CONTROL SYSTEM PAX/CREW DOOR D/O (3)

DOOR INDICATING AND WARNING (continued)

UNLOCKING

The door is not locked, as soon as one proximity sensor is FAR. The door is open, the door symbol and message "CABIN" are amber.

G7508471 - G3NT1T0 - FM52D9F52G20202

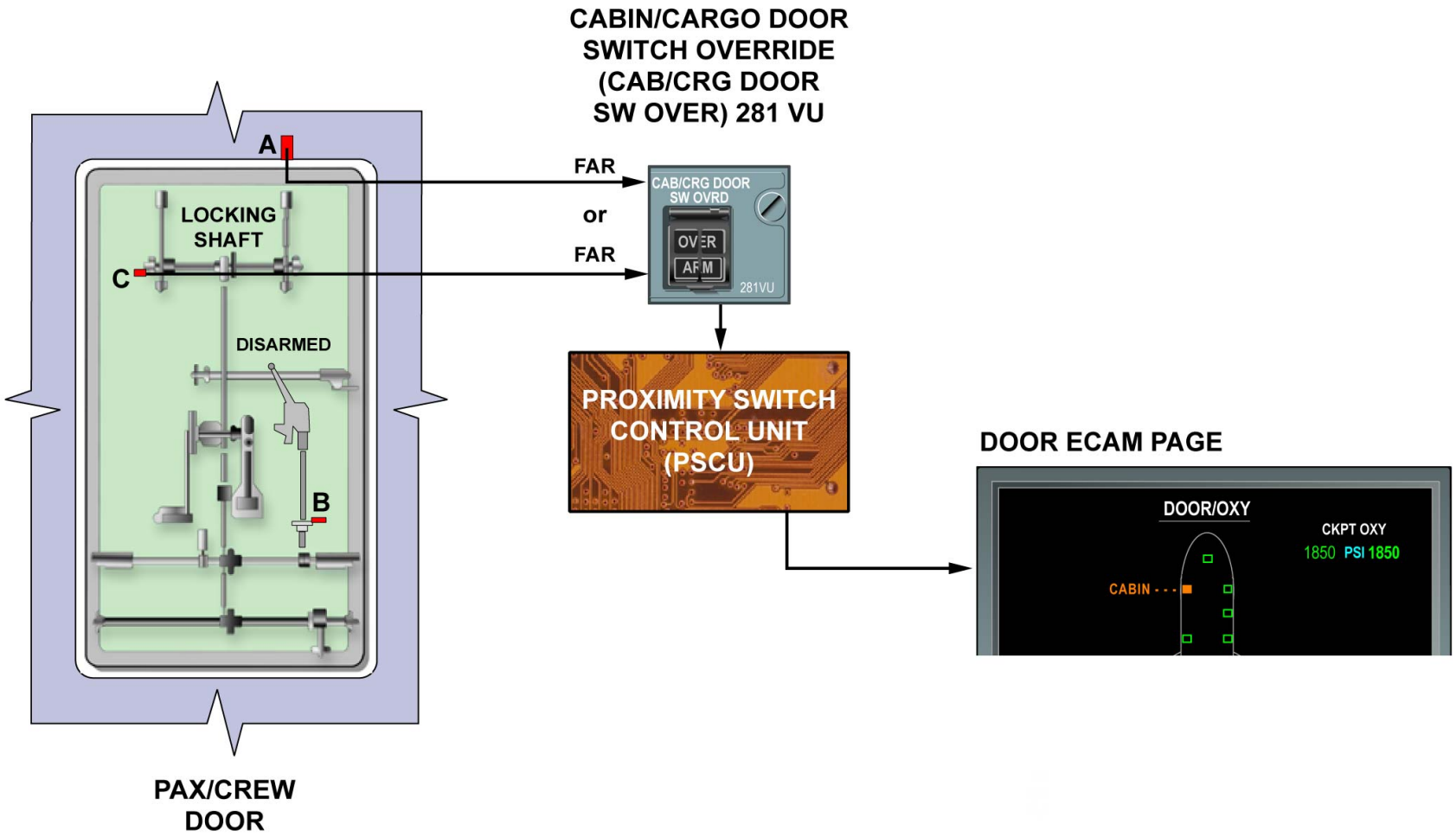

DOOR INDICATING AND WARNING - UNLOCKING

G7508471 - G3NT1T0 - FM52D9F52G20202

DOOR & SLIDE CONTROL SYSTEM PAX/CREW DOOR D/O (3)

ESCAPE SLIDE RELEASE INDICATING AND WARNING

The locking shaft and the arming lever proximity sensors give an escape slide condition indication on the DOOR ECAM page and on the door itself via the PSCU.

ARMED LOCKED

When the escape slide is armed and door locked, the word "SLIDE" appears in white on the ECAM page and the door symbol is green.

G7508471 - G3NT1T0 - FM52D9F52G20202

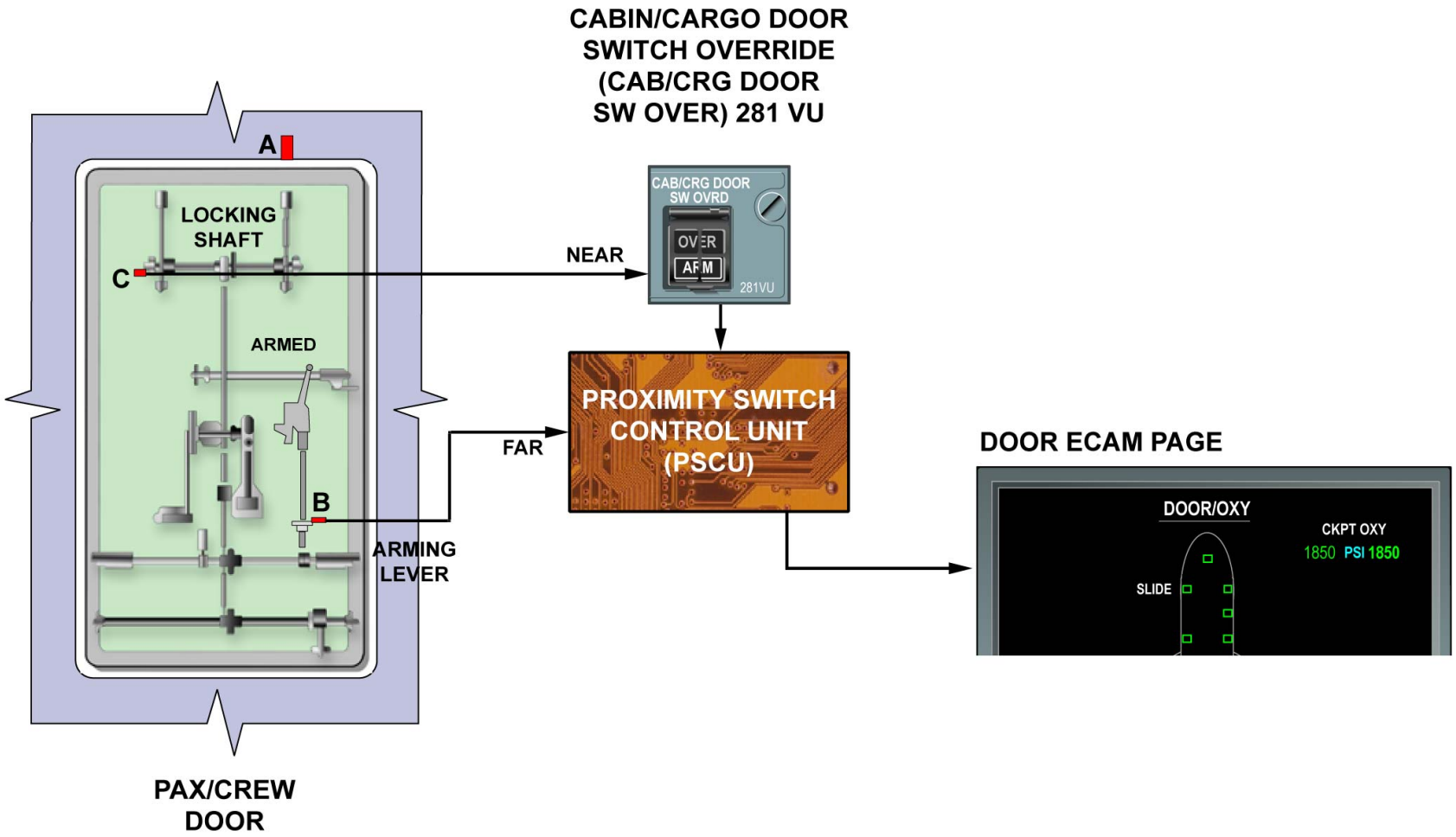

ESCAPE SLIDE RELEASE INDICATING AND WARNING - ARMED LOCKED

G7508471 - G3NT1T0 - FM52D9F52G20202

DOOR & SLIDE CONTROL SYSTEM PAX/CREW DOOR D/O (3)

ESCAPE SLIDE RELEASE INDICATING AND WARNING (continued)

ARMED NOT LOCKED

When the escape slide is armed but not locked, the word "SLIDE" appears on the ECAM page and the door symbol is amber. In addition to these indications, the "SLIDE ARMED" light comes on steady on the door.

G7508471 - G3NT1T0 - FM52D9F52G20202

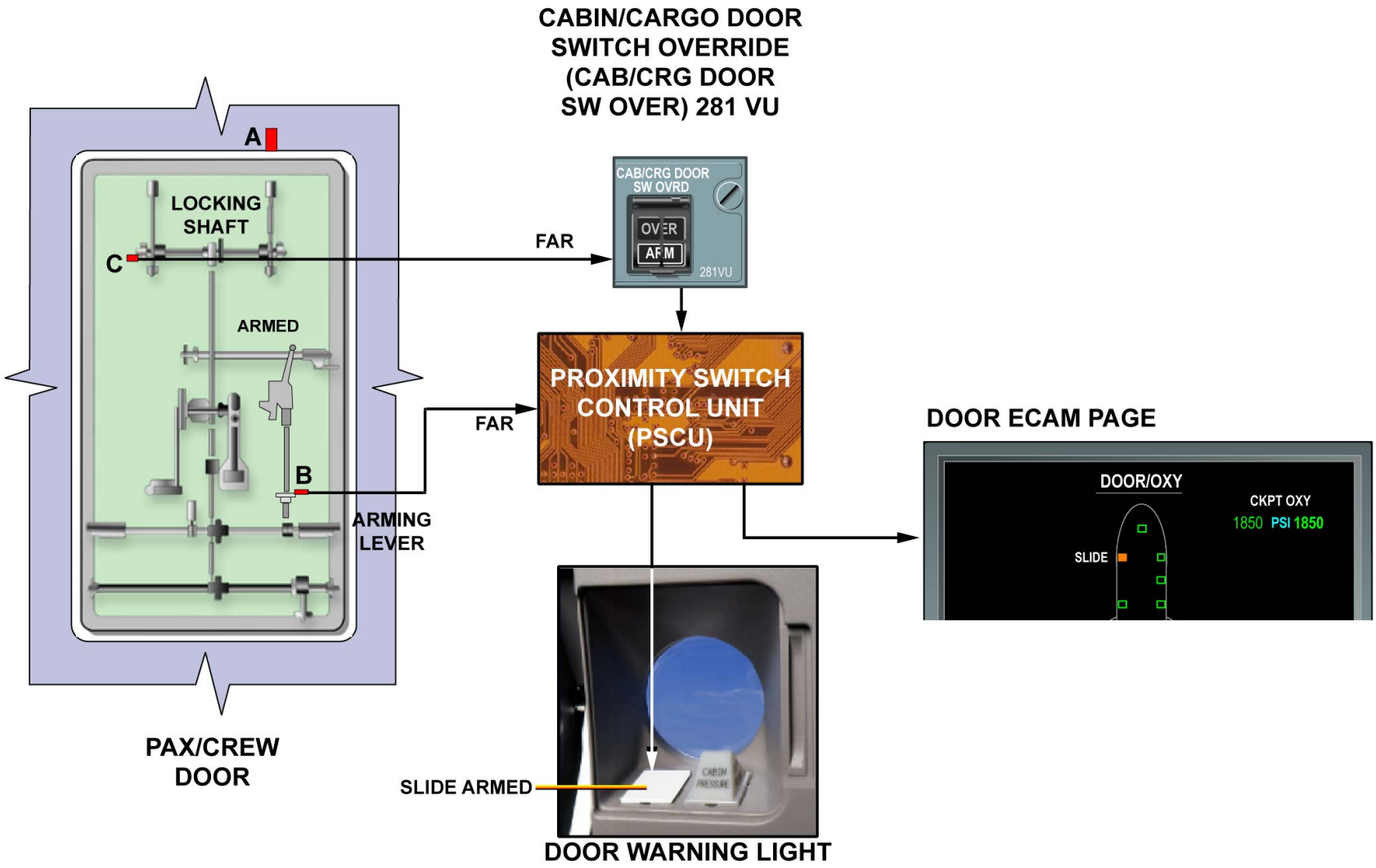

ESCAPE SLIDE RELEASE INDICATING AND WARNING - ARMED NOT LOCKED

G7508471 - G3NT1T0 - FM52D9F52G20202

DOOR & SLIDE CONTROL SYSTEM PAX/CREW DOOR D/O (3)

ESCAPE SLIDE RELEASE INDICATING AND WARNING (continued)

DISARMED LOCKED

When the escape slide is disarmed and door locked, the word "SLIDE" disappears and the door symbol is green.

G7508471 - G3NT1T0 - FM52D9F52G20202

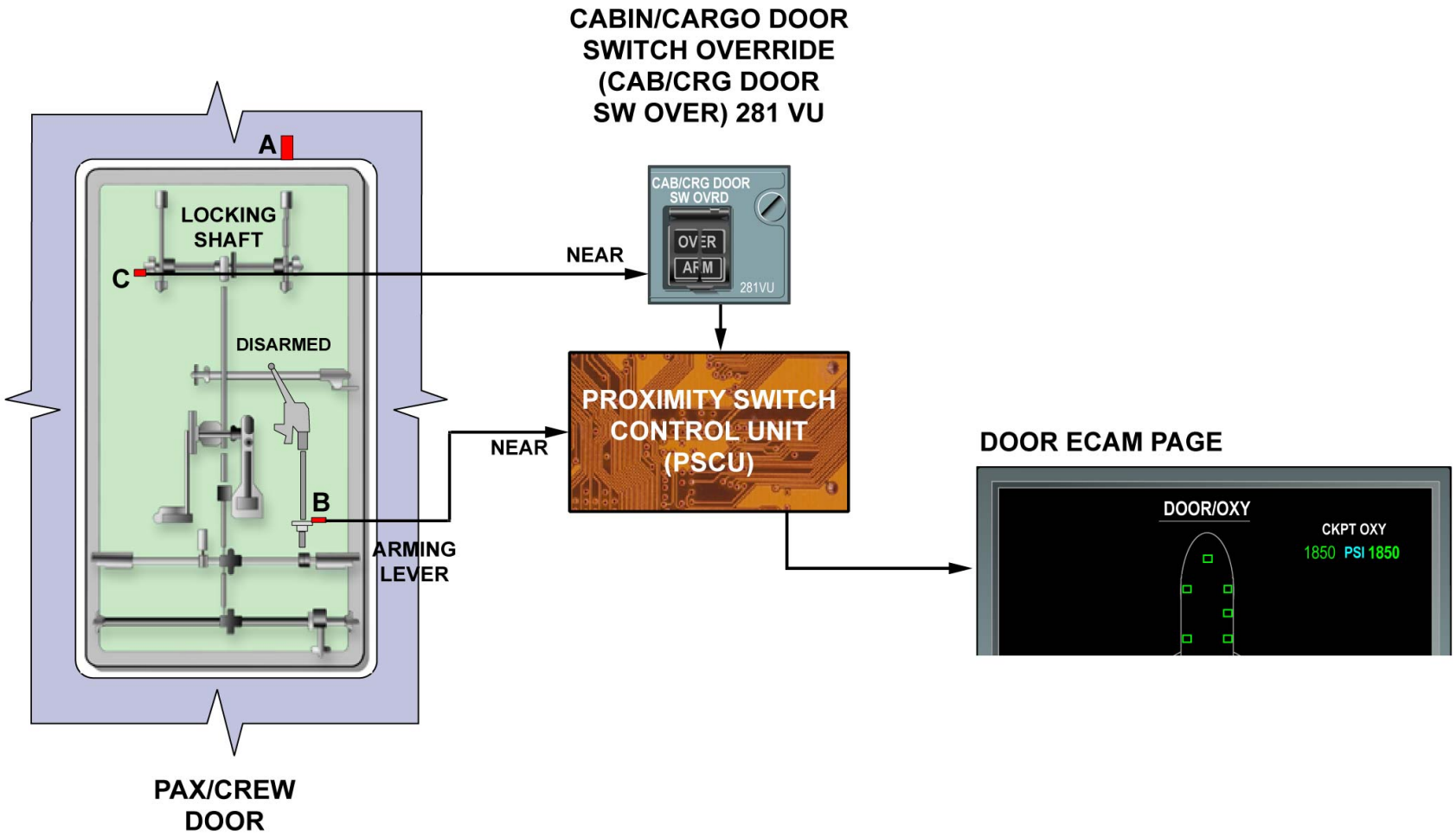

ESCAPE SLIDE RELEASE INDICATING AND WARNING - DISARMED LOCKED

G7508471 - G3NT1T0 - FM52D9F52G20202

DOOR & SLIDE CONTROL SYSTEM PAX/CREW DOOR D/O (3)

ESCAPE SLIDE RELEASE INDICATING AND WARNING (continued)

DISARMED NOT LOCKED

When the escape slide is disarmed and door not locked, the door symbol is amber and an amber dashed line replaces the slide indication.

G7508471 - G3NT1T0 - FM52D9F52G20202

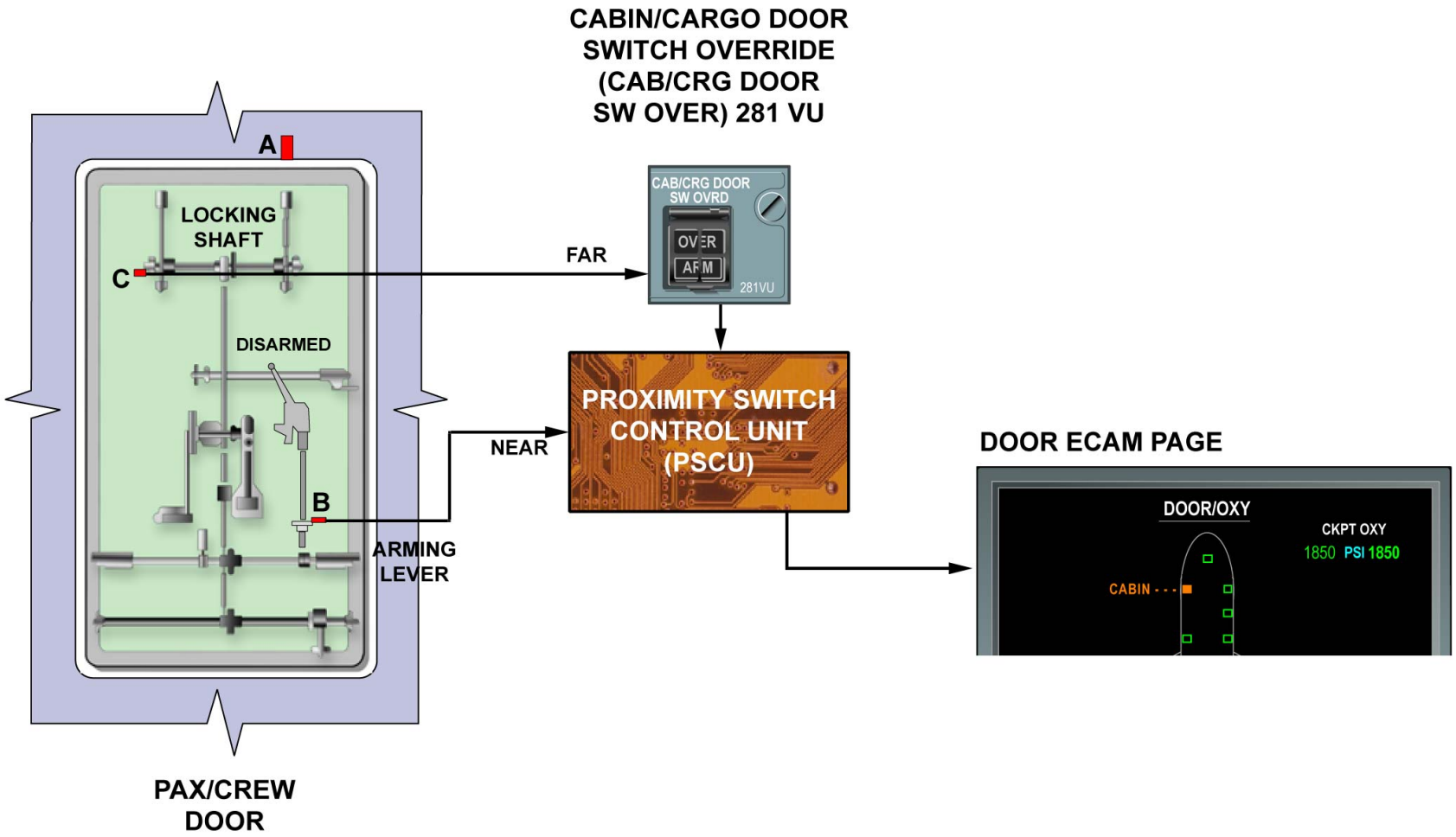

ESCAPE SLIDE RELEASE INDICATING AND WARNING - DISARMED NOT LOCKED

G7508471 - G3NT1T0 - FM52D9F52G20202

DOOR & SLIDE CONTROL SYSTEM PAX/CREW DOOR D/O (3)

CONTROL AND MONITORING

The red flashing light indicates an excessive residual cabin pressure and flashes if:
- engines N2 and N3 are not running,
- residual cabin pressure is greater than 2.5 mbars,
- the escape slide is disarmed.

G7508471 - G3NT1T0 - FM52D9F52G20202

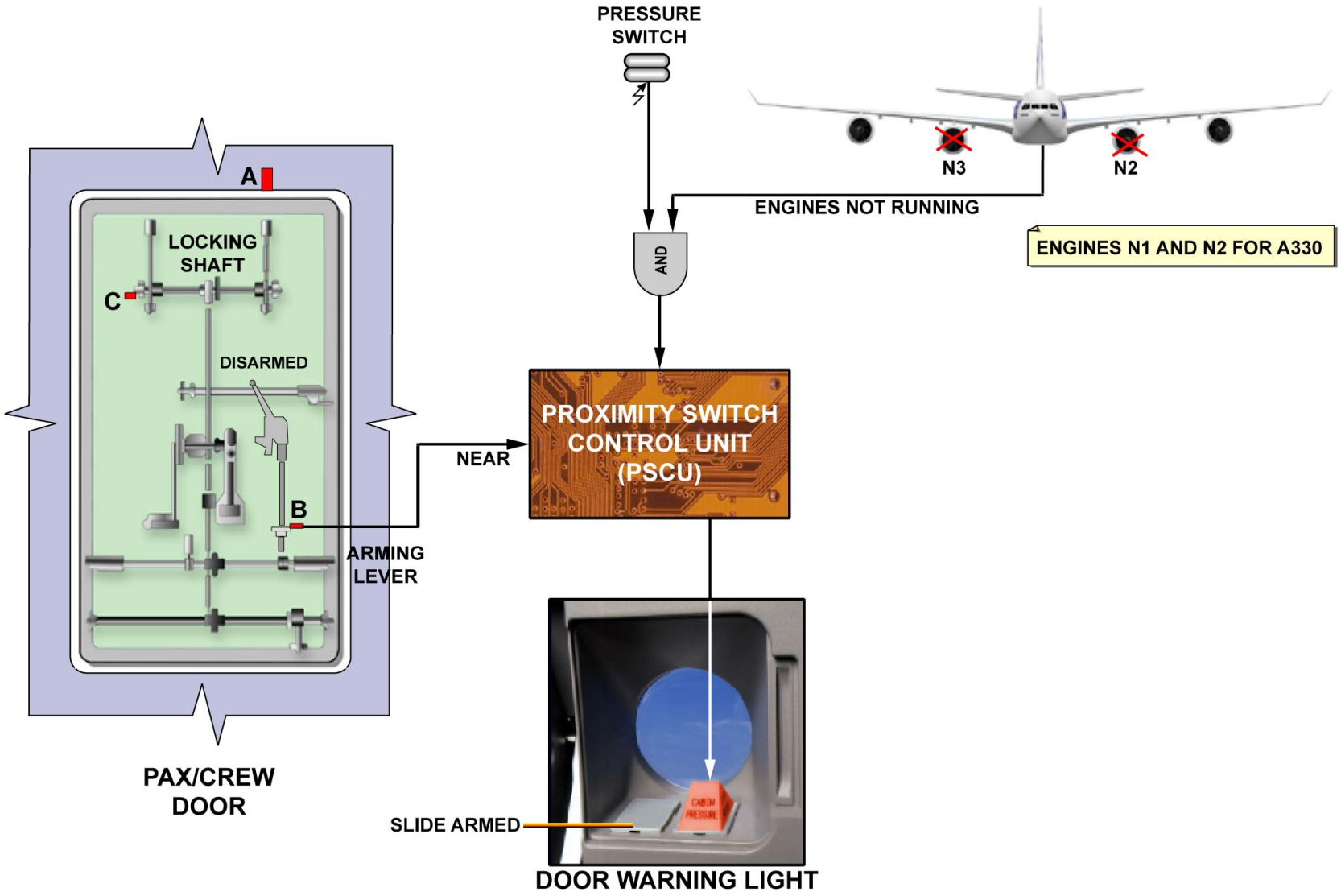

CONTROL AND MONITORING

G7508471 - G3NT1T0 - FM52D9F52G20202

DSCS FORWARD AND AFT CARGO DOOR D/O (3)

GENERAL

The FWD and aft cargo doors have three similar proximity sensors, which are part of:
- the door indicating and warning system,
- the cargo door electrical control system,
- the residual cabin pressure detection and indicating system.

G7508471 - G3NT1T0 - FM52DAF52G70303

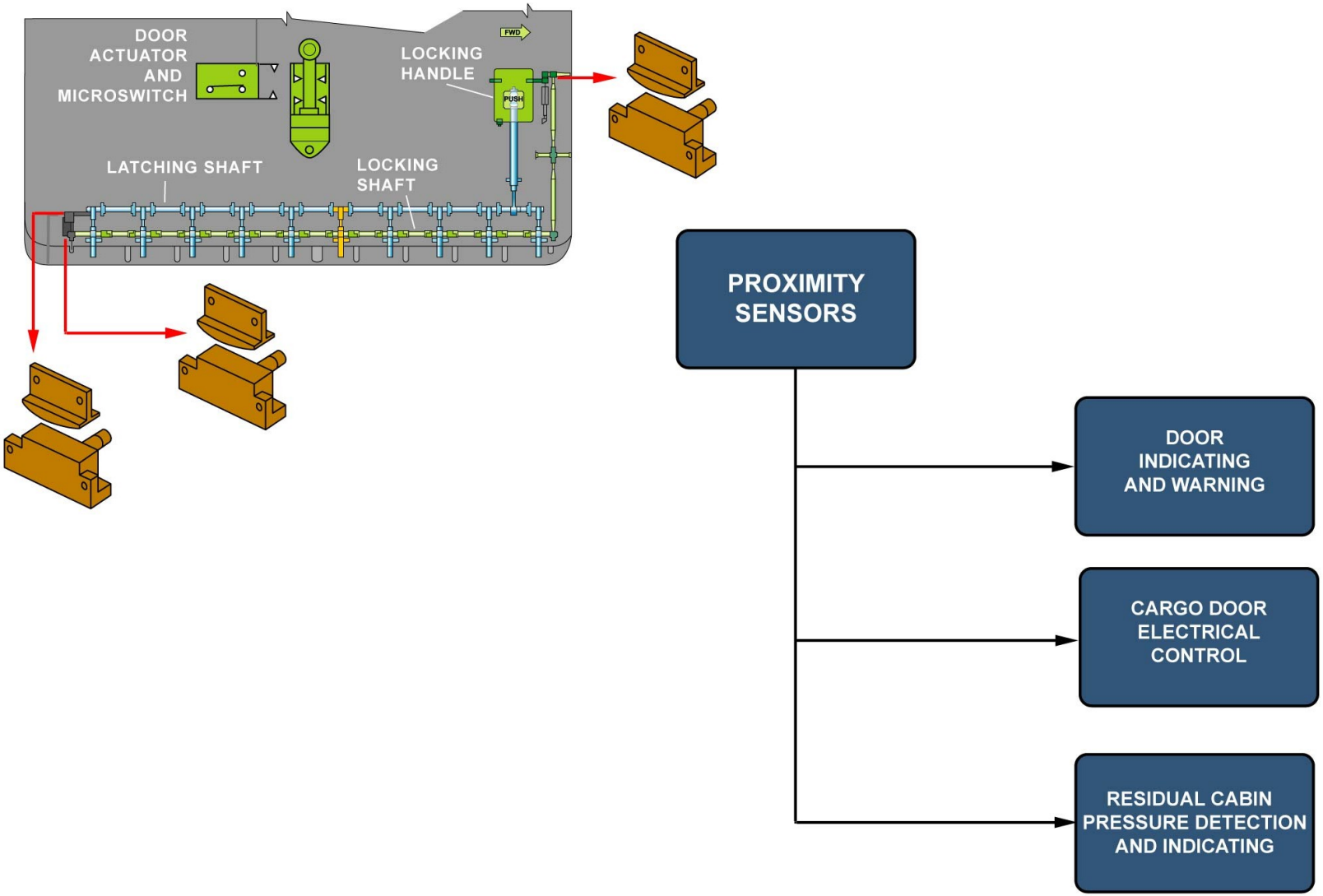

GENERAL

G7508471 - G3NT1T0 - FM52DAF52G70303

DSCS FORWARD AND AFT CARGO DOOR D/O (3)

DOOR INDICATING AND WARNING SYSTEM

The locking handle and locking shaft proximity sensors provide the door condition indication on the ECAM via the Proximity Switch Control Unit (PSCU).

LOCKED

When the door is latched and locked, both proximity sensors are NEAR. The door symbols are green on the door ECAM page.

G7508471 - G3NT1T0 - FM52DAF52G70303

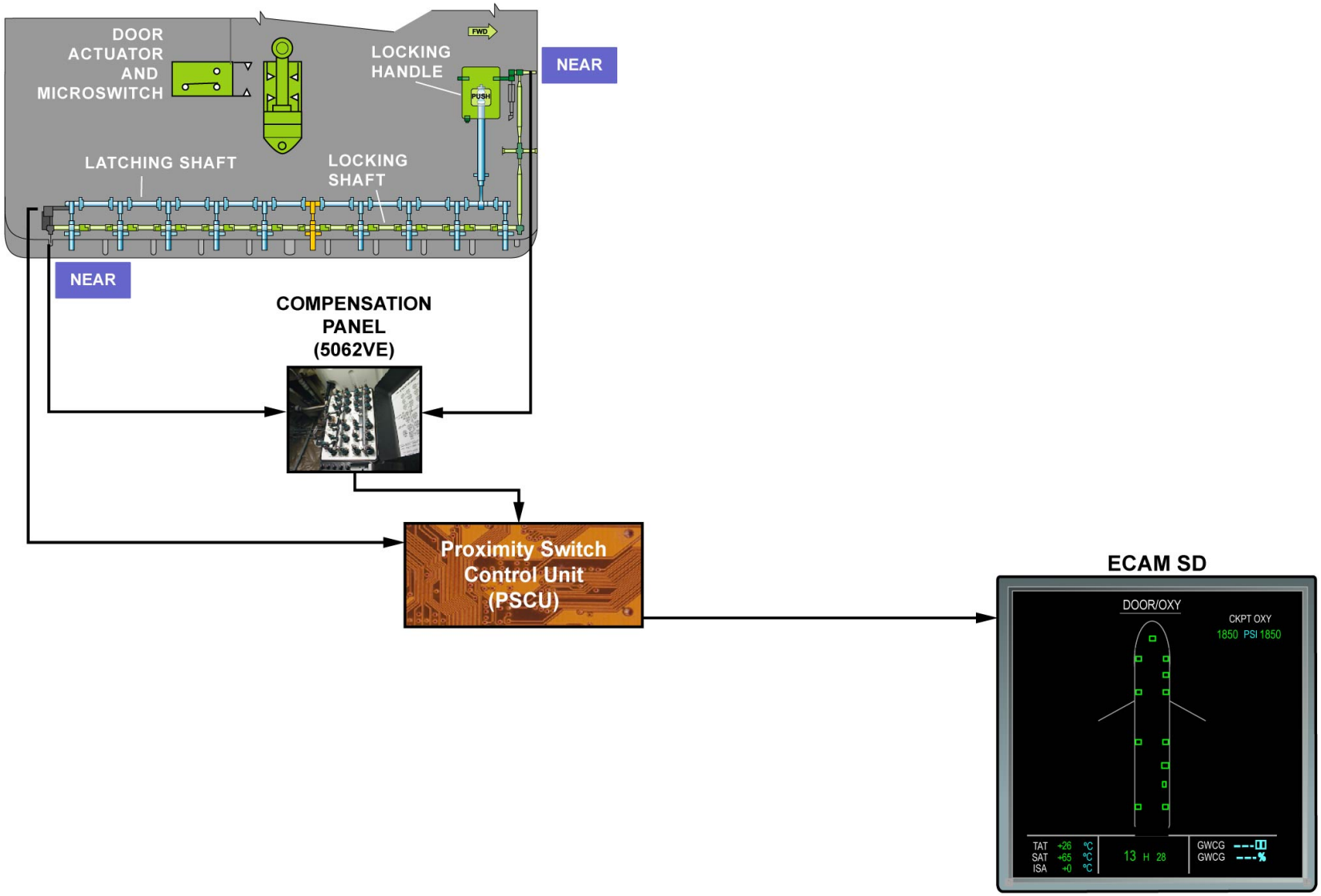

DOOR INDICATING AND WARNING SYSTEM - LOCKED

G7508471 - G3NT1T0 - FM52DAF52G70303

DSCS FORWARD AND AFT CARGO DOOR D/O (3)

DOOR INDICATING AND WARNING SYSTEM (continued)

NOT LOCKED

As soon as one of the two proximity sensors is FAR, the door is indicated as unlocked on the ECAM page. The door symbols are amber.

G7508471 - G3NT1T0 - FM52DAF52G70303

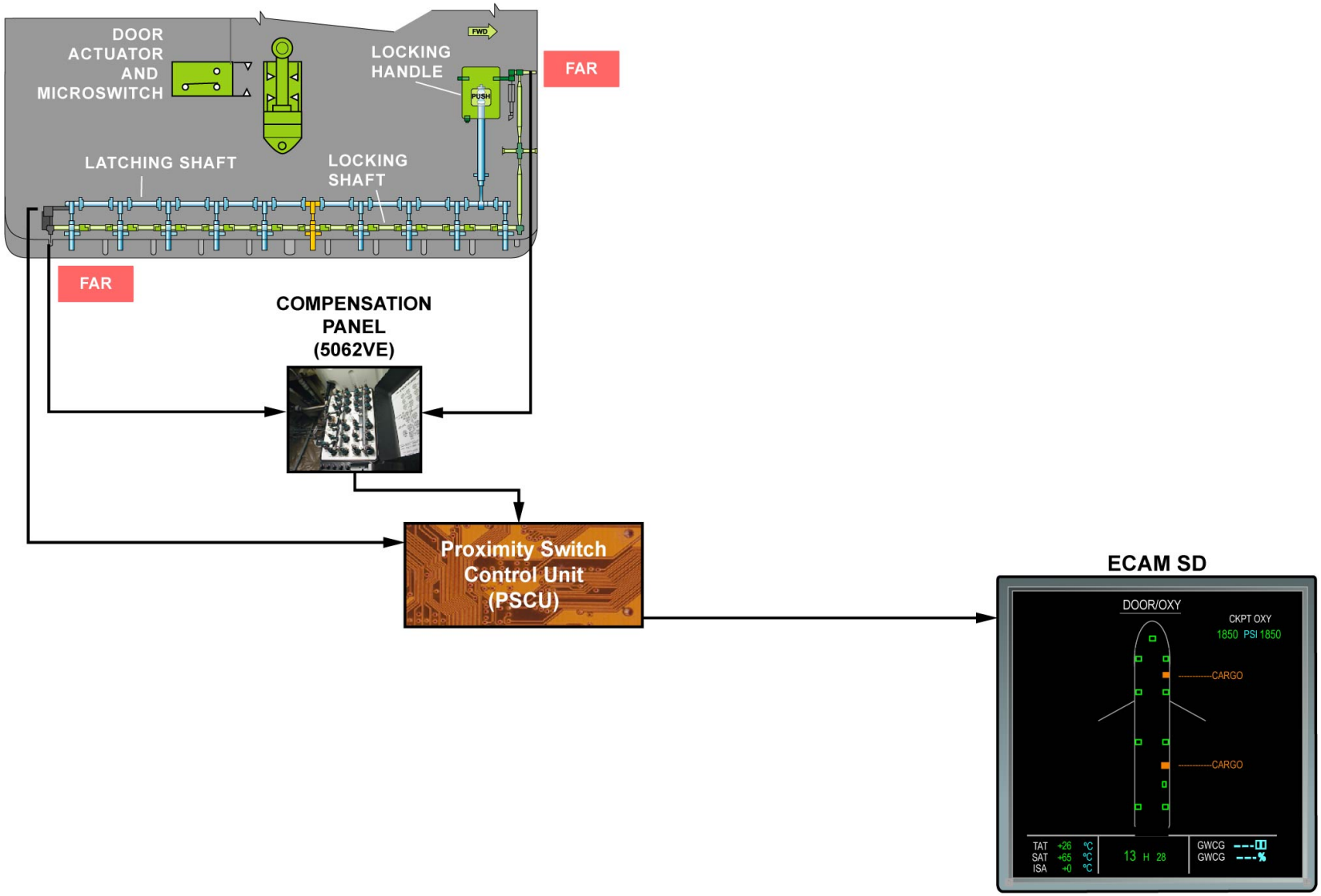

DOOR INDICATING AND WARNING SYSTEM - NOT LOCKED

G7508471 - G3NT1T0 - FM52DAF52G70303

DSCS FORWARD AND AFT CARGO DOOR D/O (3)

DOOR INDICATING AND WARNING SYSTEM (continued)

FULLY OPEN

When the door reaches the fully open position, the door actuator switch comes on, on the green indicator light installed in the manual selector valve panel.

G7508471 - G3NT1T0 - FM52DAF52G70303

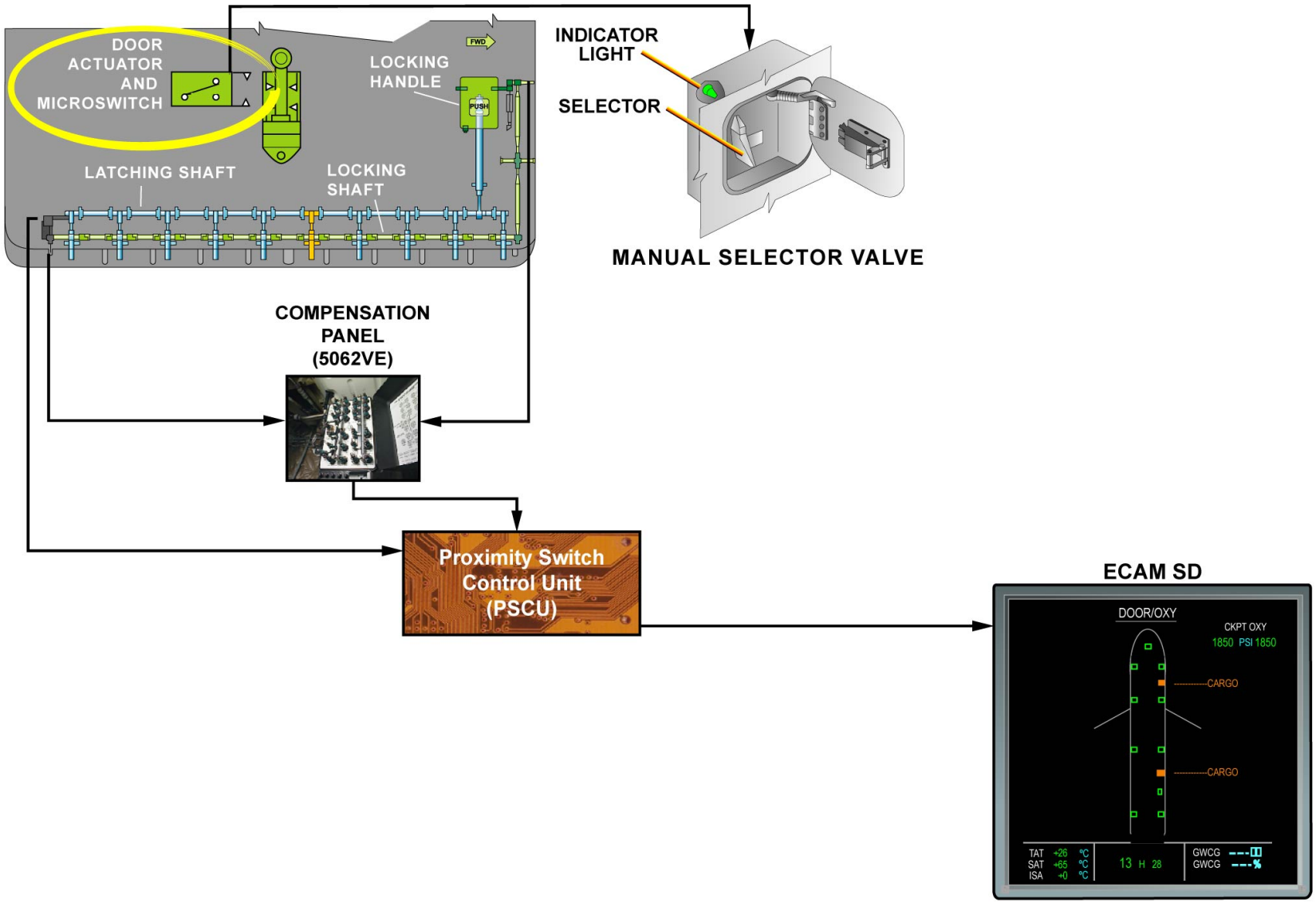

DOOR INDICATING AND WARNING SYSTEM - FULLY OPEN

G7508471 - G3NT1T0 - FM52DAF52G70303

DSCS FORWARD AND AFT CARGO DOOR D/O (3)

RESIDUAL PRESSURE

The red flashing light indicates an excessive residual cabin pressure and it is visible only if the locking handle is opened. The red light flashes if engines N2 and N3 (for an A340) or engines N1 and N2 (for an A330) are not running, residual cabin pressure greater than 2.5 mbars, and the locking shaft proximity sensor is FAR.

G7508471 - G3NT1T0 - FM52DAF52G70303

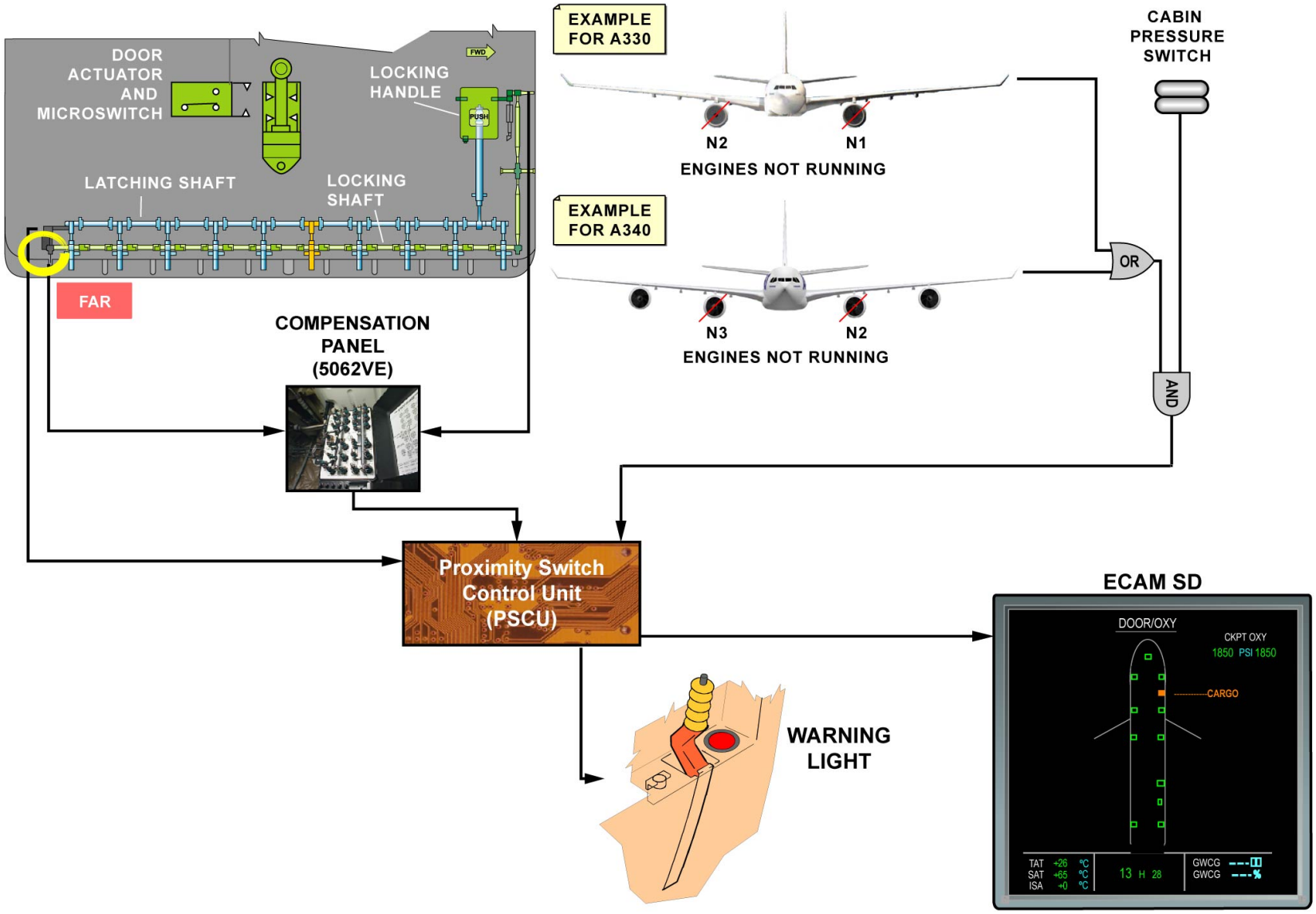

RESIDUAL PRESSURE

G7508471 - G3NT1T0 - FM52DAF52G70303

DSCS FORWARD AND AFT CARGO DOOR D/O (3)

ELECTRICAL CONTROL SYSTEM

The electrical selector valve is supplied when:
- the latching shaft proximity sensor is NEAR,
- the door sill latches are up,
- the manual selector valve is operated (the integrated proximity sensor sends a signal to the PSCU).

The PSCU also sends a signal to the Hydraulic System Monitoring Unit (HSMU) to:
- close the yellow leak measurement valve,
- inhibit flap operation,
- start the yellow electric pump.

G7508471 - G3NT1T0 - FM52DAF52G70303

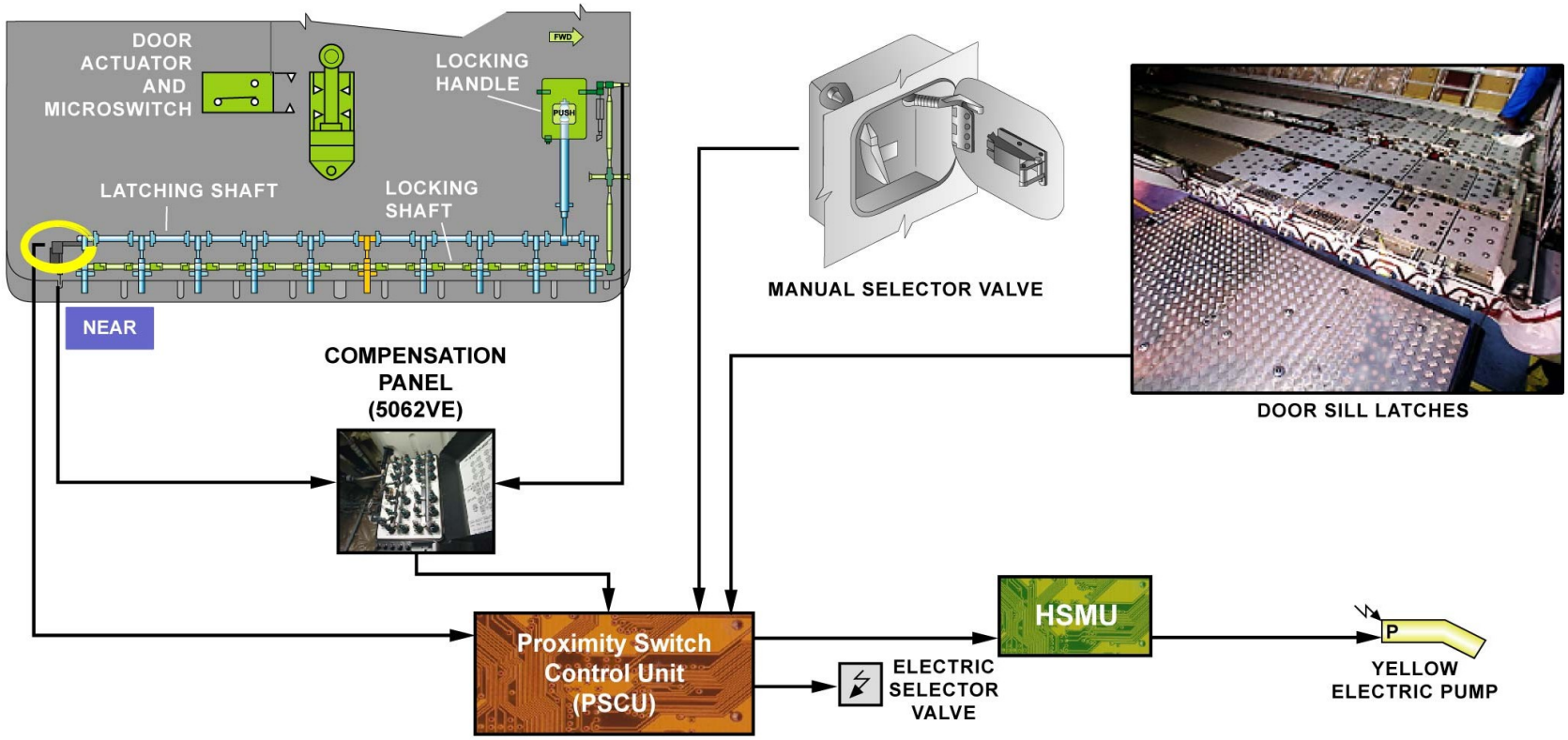

ELECTRICAL CONTROL SYSTEM

DSCS BULK CARGO & AVIONICS COMPT DOORS D/O (3)

BULK CARGO DOOR

Two proximity sensors control the door warning function of the bulk cargo door. The sensors are installed on either side of the door frame on the fuselage and are also used to prevent pressurization if the door is not fully closed or one sensor is defective.

AVIONICS COMPARTMENT DOOR

The avionics floor door uses a single sensor for the door warning function. It is installed on the door frame on the fuselage.

G7508471 - G3NT1T0 - FM52DBF52G90203

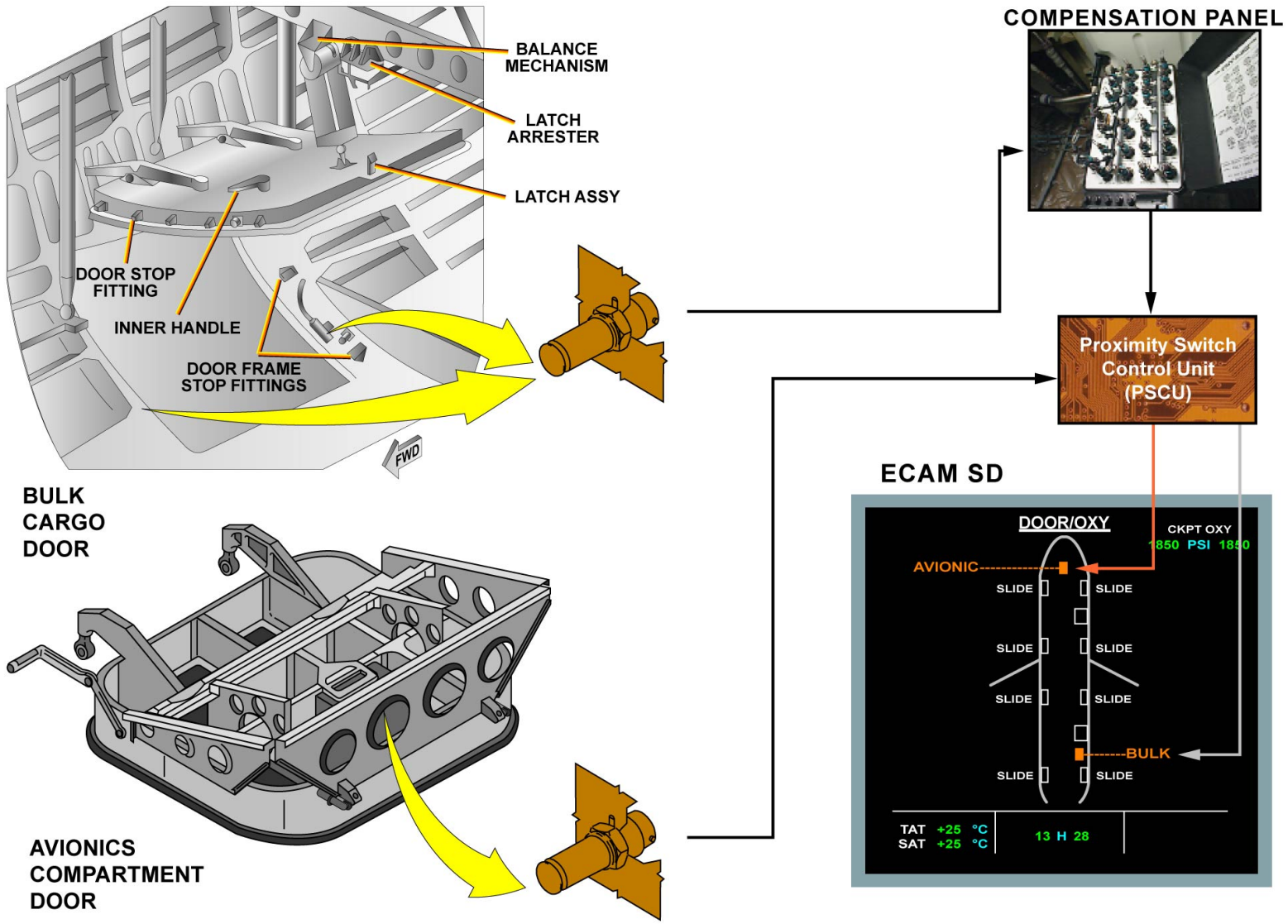

BULK CARGO DOOR & AVIONICS COMPARTMENT DOOR

G7508471 - G3NT1T0 - FM52DBF52G90203

DOORS SYSTEM BASE MAINTENANCE (3)

INTRODUCTION

This module will cover the following procedures:
- discharging / charging of the Door Damper and Emergency Operation Cylinder,
- BITE Test of the Autonomous Standby Power Supply Unit (ASPSU),
- battery Capacity Test of the ASPSU.

Special precautions must be taken before working on the door.

WARNING: HIGH GAS PRESSURE CAN CAUSE SKIN INJURY. GAS CAN GET INTO YOUR BLOOD AND CAUSE DEATH.

CAUTION: DO NOT APPLY MORE THAN THE SPECIFIED TORQUE ON THE NUT OF THE FILLING VALVE. OVERTORQUE WILL CAUSE DAMAGE TO THE VALVE, AND WILL THUS CAUSE LEAKAGE OF NITROGEN FROM THE CYLINDER.

WARNING: DO NOT FILL THE DOOR DAMPER AND EMERGENCY-OPERATION CYLINDER TO A PRESSURE HIGHER THAN 123 BARS (1783 PSI) FOR THE A340 AND 120 BARS (1740) FOR THE A330. TOO MUCH PRESSURE DURING CYLINDER FILLING CAN CAUSE INJURY AND/OR DAMAGE.

WARNING: MAKE SURE THAT THE SAFETY DEVICES AND THE WARNING NOTICES ARE IN POSITION BEFORE YOU START A TASK ON OR NEAR:
- THE FLIGHT CONTROLS,
- THE FLIGHT CONTROL SURFACES,
- THE LANDING GEAR AND THE RELATED DOORS,
- COMPONENTS IN MOTION.

MOVEMENT OF COMPONENTS CAN KILL OR INJURE PERSONS.

WARNING: BEFORE YOU START WORKING ON THE DOOR MAKE SURE THAT:
- THE EMERGENCY CONTROL HANDLE IS IN THE DISARMED POSITION WITH THE SAFETY PIN INSTALLED,
- THE PERCUSSION LEVER OF THE DOOR DAMPER AND EMERGENCY OPERATION CYLINDER IS IN THE DISARMED POSITION WITH THE SAFETY PIN INSTALLED. THESE PRECAUTIONS ENSURE THAT THE DOOR DOES NOT OPEN SUDDENLY. IF THE DOOR OPENS SUDDENLY, IT CAN CAUSE INJURY AND / OR DAMAGE.

WARNING: USE SOLVENTS/CLEANING AGENTS, SEALANTS AND OTHER SPECIAL MATERIALS ONLY IN PROPERLY VENTILATED CONDITIONS (VENTILATED AREA). THESE MATERIALS ARE POISONOUS, FLAMMABLE AND SKIN IRRITANTS. OBEY THE MANUFACTURERS INSTRUCTIONS. PUT ON PROTECTIVE CLOTHING. AVOID CONTACT WITH YOUR MOUTH. DO NOT SMOKE. DO NOT BREATHE IN THE GAS. GET MEDICAL HELP IF YOUR SKIN OR EYES BECOME IRRITATED.

G7508471 - G3NT1T0 - FM52Y2BASEMCE02

- DISCHARGING / CHARGING OF THE DOOR DAMPER AND EMERGENCY OPERATION CYLINDER.
- BITE TEST OF THE AUTONOMOUS STANDBY POWER SUPPLY UNIT (ASPSU).
- BATTERY CAPACITY TEST OF THE ASPSU.

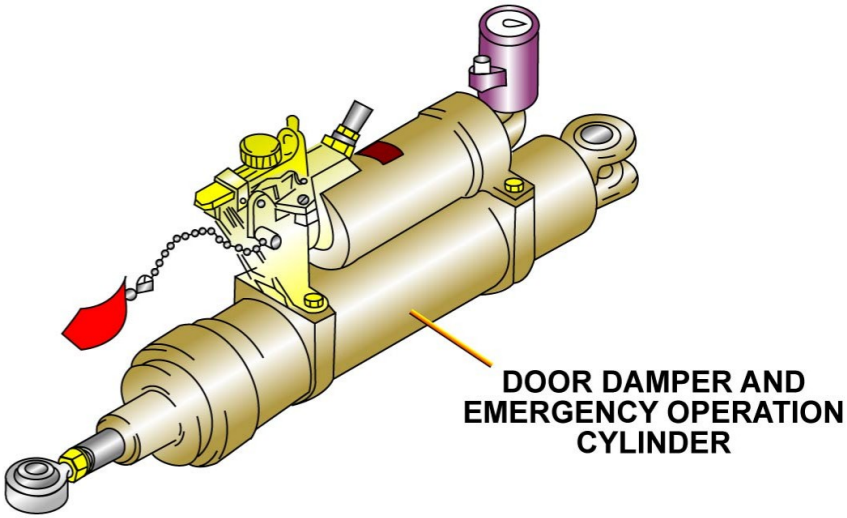

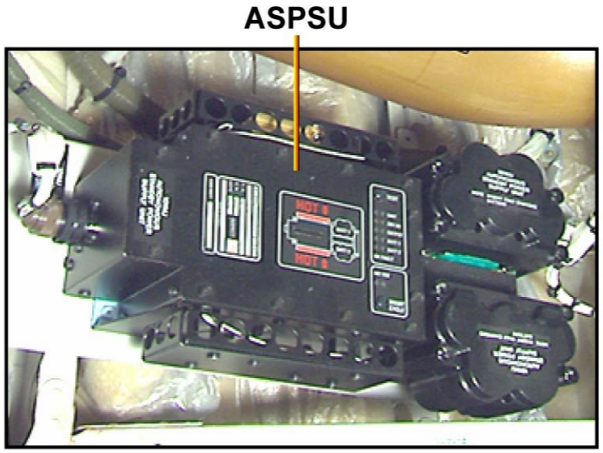

INTRODUCTION

- DISCHARGING / CHARGING OF THE DOOR DAMPER AND EMERGENCY OPERATION CYLINDER.
- BITE TEST OF THE AUTONOMOUS STANDBY POWER SUPPLY UNIT (ASPSU).
- BATTERY CAPACITY TEST OF THE ASPSU.

SPECIAL PRECAUTIONS 1/2

WARNING
HIGH GAS PRESSURE CAN CAUSE SKIN INJURY. GAS CAN GET INTO YOUR BLOOD AND CAUSE DEATH.

CAUTION
DO NOT APPLY MORE THAN THE SPECIFIED TORQUE TO THE NUT OF THE FILLING VALVE. OVERTORQUE WILL CAUSE DAMAGE TO THE VALVE, AND WILL THUS CAUSE LEAKAGE OF NITROGEN FROM THE CYLINDER.

WARNING
DO NOT FILL THE DOOR DAMPER AND EMERGENCY-OPERATION CYLINDER TO A PRESSURE HIGHER THAN 123 BARS (1783 PSI) FOR THE A340 AND 120 BARS (1740 PSI) FOR THE A330. TOO MUCH PRESSURE DURING CYLINDER FILLING CAN CAUSE INJURY AND/OR DAMAGE.

WARNING
MAKE SURE THAT THE SAFETY DEVICES AND THE WARNING NOTICES ARE IN POSITION BEFORE YOU START A TASK ON OR NEAR:
- THE FLIGHT CONTROLS,
- THE FLIGHT CONTROL SURFACES,
- THE LANDING GEAR AND THE RELATED DOORS,
- COMPONENTS IN MOTION.

MOVEMENT OF COMPONENTS CAN KILL OR INJURE PERSONS.

WARNING
BEFORE YOU START WORKING ON THE DOOR MAKE SURE THAT:
- THE EMERGENCY CONTROL HANDLE IS IN THE DISARMED POSITION WITH THE SAFETY PIN INSTALLED,
- THE PERCUSSION LEVER OF THE DOOR DAMPER AND EMERGENCY OPERATION CYLINDER IS IN THE DISARMED POSITION WITH THE SAFETY PIN INSTALLED.

THESE PRECAUTIONS ENSURE THAT THE DOOR DOES NOT OPEN SUDDENLY.
IF THE DOOR OPENS SUDDENLY, IT CAN CAUSE INJURY AND / OR DAMAGE.

INTRODUCTION

- DISCHARGING / CHARGING OF THE DOOR DAMPER AND EMERGENCY OPERATION CYLINDER.
- BITE TEST OF THE AUTONOMOUS STANDBY POWER SUPPLY UNIT (ASPSU).
- BATTERY CAPACITY TEST OF THE ASPSU.

SPECIAL PRECAUTIONS 2/2

WARNING

USE SOLVENTS/CLEANING AGENTS,SEALANTS AND OTHER SPECIAL MATERIALS ONLY IN PROPERLY VENTILATED CONDITIONS (VENTILATED AREA).
THESE MATERIALS ARE POISONOUS, FLAMMABLE AND SKIN IRRITANTS.
OBEY THE MANUFACTURERS INSTRUCTIONS.
PUT ON PROTECTIVE CLOTHING.
AVOID CONTACT WITH YOUR MOUTH.
DO NOT SMOKE.
DO NOT BREATHE IN THE GAS.
GET MEDICAL HELP IF YOUR SKIN OR EYES BECOME IRRITATED.

INTRODUCTION

DOORS SYSTEM BASE MAINTENANCE (3)

DISCHARGING/CHARGING OF THE DOOR DAMPER AND EMERGENCY OPERATION CYLINDER

The AMM procedure is similar for all passenger / crew doors.
Make sure that the C/Bs 2MJ and 3MJ are opened, safetied and tagged.
To discharge the gas cylinder, remove the blanking cap from the filling valve.
Slowly loosen the filling valve nut to release the pressure as required.
Then tighten the filling valve nut to the specified torque value when the pressure gauge shows the correct pressure. Note that when the pressure drops to zero, then you can tighten the filling valve nut with your hand.
At the end, re-install the blanking cap on the filling valve.
To charge the gas cylinder, connect a filling system (Dry air or Nitrogen) with a pressure gauge to the filling valve.
Fill the cylinder with the correct pressure as follows: slowly open the control valve of the filling system and close it when the pressure gauge shows 55 bars (797.7073 psi).
After 3 seconds open the control valve again and close it when the pressure gauge shows 83 bars (1203.8129 psi).
3 seconds later open the control valve again and close it when the pressure gauge shows 123 bars (1783.9637 psi) for the A340 and 120 bars (1740.4524 psi) for the A330. Note that the cylinder is correctly pressurized when the pointer of the pressure gauge is in the green area.
Tighten the filling valve nut with your hand. Remove the extension adapter from the filling valve when the pressure is stable. Tighten the filling valve nut to the specified torque value and install the blanking cap.
The task has been completed.

Discharging/Charging of the Door Damper and Emergency Operation Cylinder

...

Job set-up

...

Open,safety and tag these circuit breakers:

721VU	DOORS &SLIDES CTL	3MJ	N12 (for A340)
721VU	DOORS &SLIDES CTL	3MJ	N12 (for A330)
722VU	DOORS &SLIDES CTL	2MJ	P41

...

Procedure

...

Close-up

...

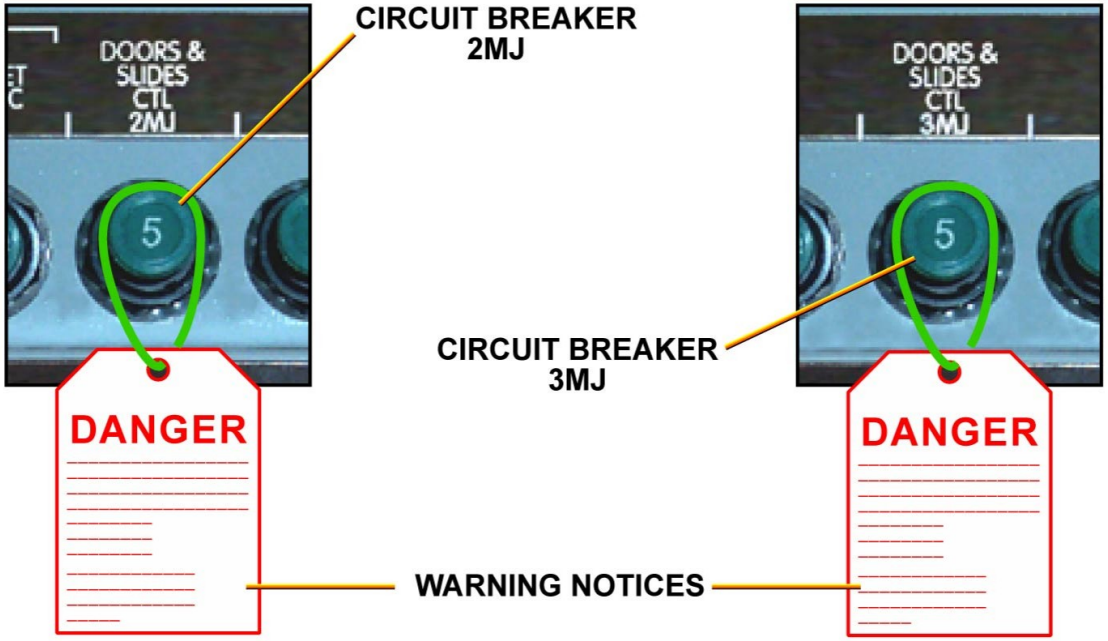

DISCHARGING/CHARGING OF THE DOOR DAMPER AND EMERGENCY OPERATION CYLINDER

Discharging/Charging of the Door Damper and Emergency Operation Cylinder

...

Job set-up

...

Procedure

...

Discharging of the Cylinder

...

Remove the blanking cap from the filling valve.
Slowly loosen the filling valve nut to release the pressure as required.
Tighten the filling valve nut to the specified torque value when the pressure gage shows the correct pressure.
NOTE: When the pressure is decreased to zero, then you can tighten the filling valve nut with your hand.
Install the blanking cap on the filling valve.

...

Charging of the Cylinder

...

...

Close-up

...

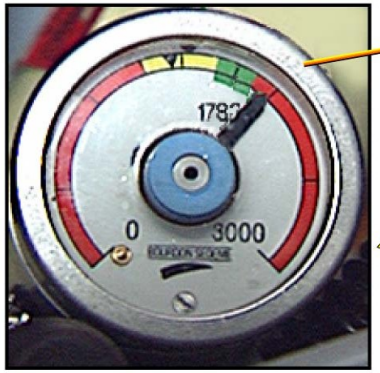

PRESSURE GAUGE (wrong pressure: indication in red area)

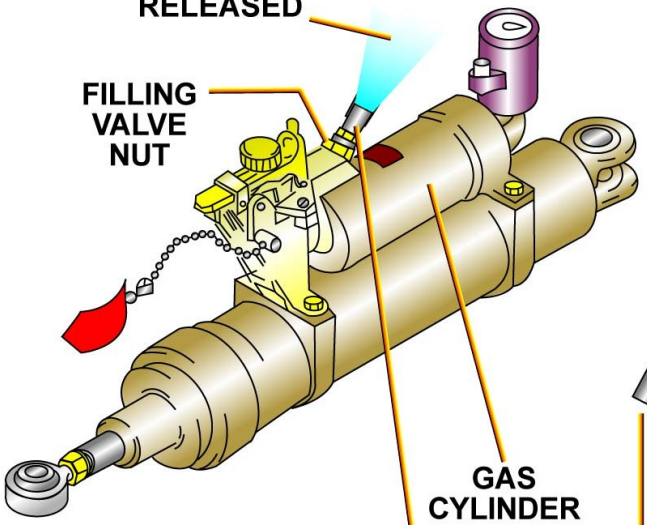

DISCHARGING/CHARGING OF THE DOOR DAMPER AND EMERGENCY OPERATION CYLINDER

Discharging/Charging of the Door Damper and Emergency Operation Cylinder

...

Job set-up

...

Procedure

...

Discharging of the Cylinder

...

Remove the blanking cap from the filling valve.
Slowly loosen the filling valve nut to release the pressure as required.
Tighten the filling valve nut to the specified torque value when the pressure gage shows the correct pressure.
NOTE: When the pressure is decreased to zero, then you can tighten the filling valve nut with your hand.
Install the blanking cap on the filling valve.

...

Charging of the Cylinder

...

...

Close-up

...

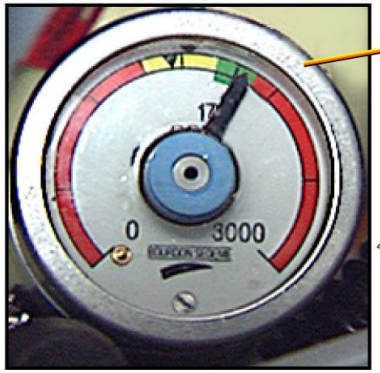

PRESSURE GAUGE
(correct pressure: indication in green area)

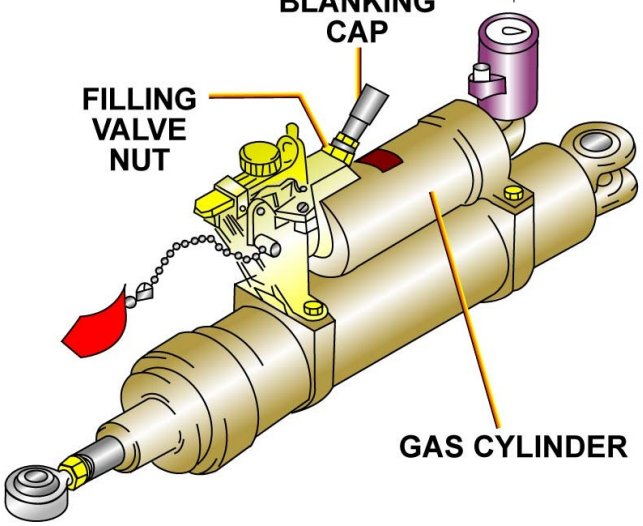

NOTE:
When the pressure drops to zero, then you can tighten the filling valve nut with your hand.

DISCHARGING/CHARGING OF THE DOOR DAMPER AND EMERGENCY OPERATION CYLINDER

Discharging/Charging of the Door Damper and Emergency Operation Cylinder

...

Job set-up

...

Procedure

...

Discharging of the Cylinder

...

Charging of the Cylinder

...

Connect a filling system (Dry air or Nitrogen) with a pressure gauge to the filling valve.

...

Fill the cylinder with the correct pressure as follows:

- Slowly open the control valve of the filling system and close it when the pressure gauge shows 55 bars (797.7073 psi).
- After 3 seconds open the control valve again and close it when the pressure gauge shows 83 bars (1203.8129 psi).
- After 3 more seconds open the control valve again and close it when the pressure gauge shows 123 bars (1783.9637 psi) for the A340 and 120 bars (1740.4524 psi) for the A330.
  NOTE:The cylinder is correctly pressurized when the pointer of the pressure gauge is in the green area.
  Tighten the filling valve nut with your hand.

Remove the extension adapter from the filling valve when the pressure is stable.

Tighten the filling valve nut to the specified torque value.

...

Close-up

...

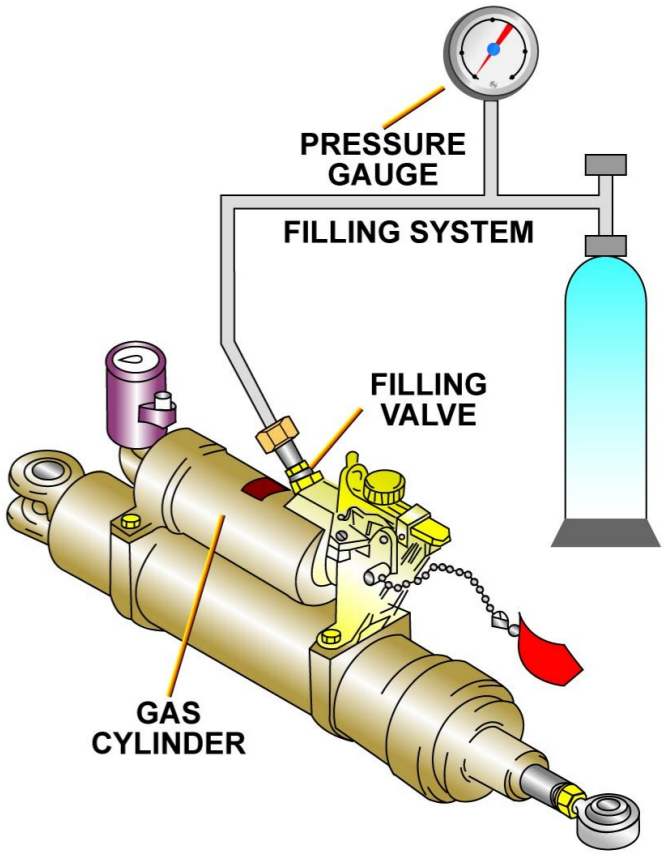

DISCHARGING/CHARGING OF THE DOOR DAMPER AND EMERGENCY OPERATION CYLINDER

Discharging/Charging of the Door Damper and Emergency Operation Cylinder

...

✓ **Job set-up**

...

Procedure

...

✓ Discharging of the Cylinder

...

Charging of the Cylinder

...

✓ Connect a filling system (Dry air or Nitrogen) with a pressure gauge to the filling valve.

...

➡ Fill the cylinder with the correct pressure as follows:
- Slowly open the control valve of the filling system and close it when the pressure gauge shows 55 bars (797.7073 psi).
- After 3 seconds open the control valve again and close it when the pressure gauge shows 83 bars (1203.8129 psi).
- After 3 more seconds open the control valve again and close it when the pressure gauge shows 123 bars (1783.9637 psi) for the A340 and 120 bars (1740.4524 psi) for the A330.
  NOTE:The cylinder is correctly pressurized when the pointer of the pressure gauge is in the green area.
  Tighten the filling valve nut with your hand.

Remove the extension adapter from the filling valve when the pressure is stable.
Tighten the filling valve nut to the specified torque value.

...

Close-up

...

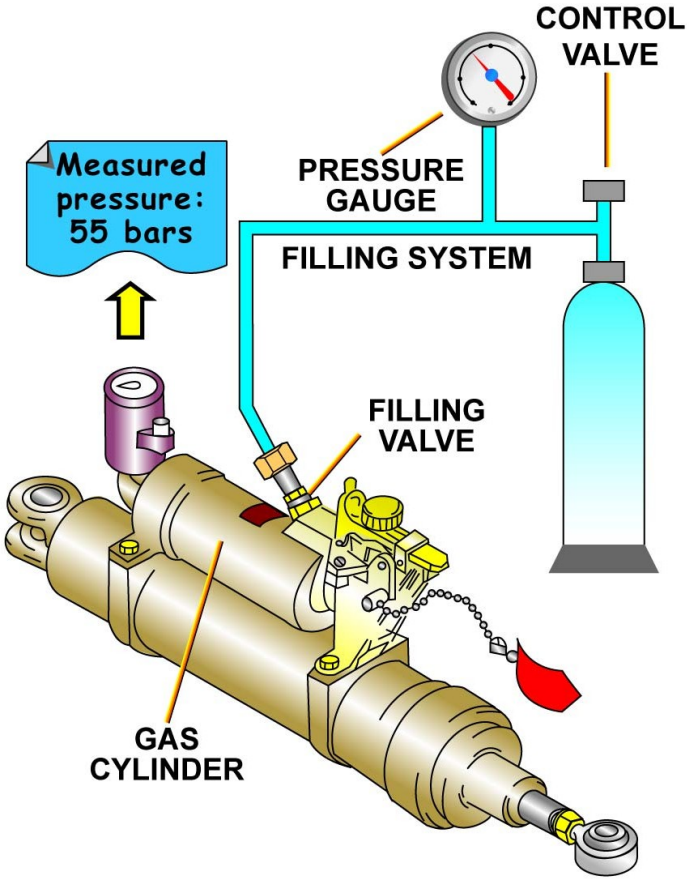

DISCHARGING/CHARGING OF THE DOOR DAMPER AND EMERGENCY OPERATION CYLINDER

Discharging/Charging of the Door Damper and Emergency Operation Cylinder

...

Job set-up

...

Procedure

...

Discharging of the Cylinder

...

Charging of the Cylinder

...

Connect a filling system (Dry air or Nitrogen) with a pressure gauge to the filling valve.

...

Fill the cylinder with the correct pressure as follows:

- **Slowly open the control valve of the filling system and close it when the pressure gauge shows 55 bars (797.7073 psi).**
- **After 3 seconds open the control valve again and close it when the pressure gauge shows 83 bars (1203.8129 psi).**
- **After 3 more seconds open the control valve again and close it when the pressure gauge shows 123 bars (1783.9637 psi) for the A340 and 120 bars (1740.4524 psi) for the A330.**

NOTE:The cylinder is correctly pressurized when the pointer of the pressure gauge is in the green area.

Tighten the filling valve nut with your hand.

Remove the extension adapter from the filling valve when the pressure is stable.

Tighten the filling valve nut to the specified torque value.

...

Close-up

...

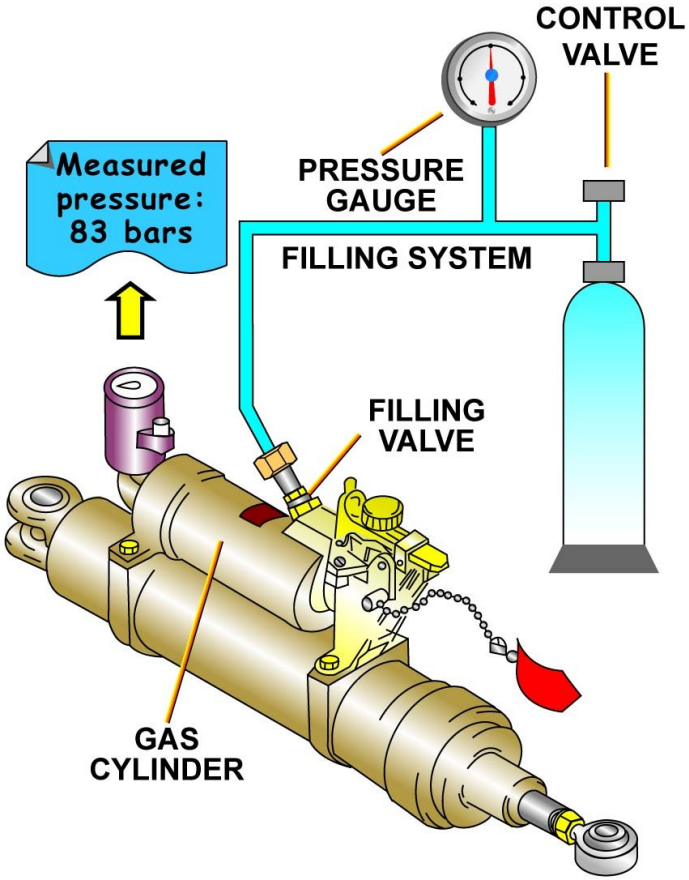

DISCHARGING/CHARGING OF THE DOOR DAMPER AND EMERGENCY OPERATION CYLINDER

Discharging/Charging of the Door Damper and Emergency Operation Cylinder

...

Job set-up

...

Procedure

...

Discharging of the Cylinder

...

Charging of the Cylinder

...

Connect a filling system (Dry air or Nitrogen) with a pressure gauge to the filling valve.

...

Fill the cylinder with the correct pressure as follows:

- Slowly open the control valve of the filling system and close it when the pressure gauge shows 55 bars (797.7073 psi).
- After 3 seconds open the control valve again and close it when the pressure gauge shows 83 bars (1203.8129 psi).
- After 3 more seconds open the control valve again and close it when the pressure gauge shows 123 bars (1783.9637 psi) for the A340 and 120 bars (1740.4524 psi) for the A330.
  NOTE:The cylinder is correctly pressurized when the pointer of the pressure gauge is in the green area.

Tighten the filling valve nut with your hand.

Remove the extension adapter from the filling valve when the pressure is stable.

Tighten the filling valve nut to the specified torque value.

...

Close-up

...

NOTE:
The cylinder is correctly pressurized when the pointer of the pressure gauge is in the green area.

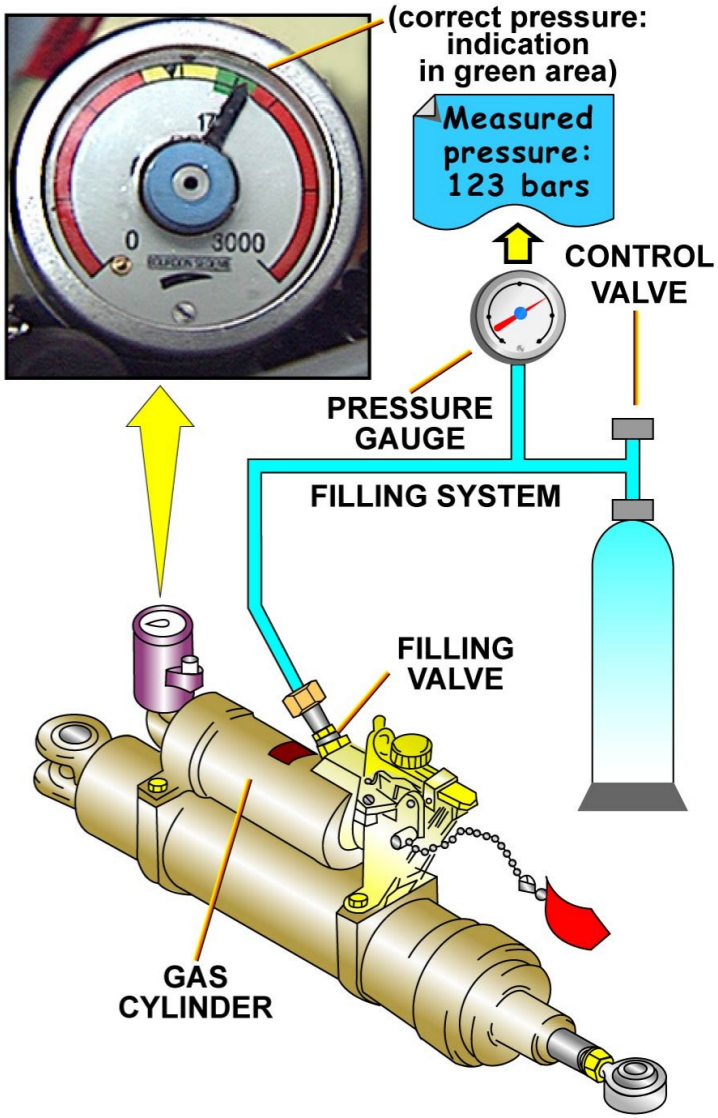

DISCHARGING/CHARGING OF THE DOOR DAMPER AND EMERGENCY OPERATION CYLINDER

G7508471 - G3NT1T0 - FM52Y2BASEMCE02

Discharging/Charging of the Door Damper and Emergency Operation Cylinder

...

Job set-up

...

Procedure

...

Discharging of the Cylinder

...

Charging of the Cylinder

...

Connect a filling system (Dry air or Nitrogen) with a pressure gauge to the filling valve.

...

Fill the cylinder with the correct pressure as follows:

- Slowly open the control valve of the filling system and close it when the pressure gauge shows 55 bars (797.7073 psi).
- After 3 seconds open the control valve again and close it when the pressure gauge shows 83 bars (1203.8129 psi).
- After 3 more seconds open the control valve again and close it when the pressure gauge shows 123 bars (1783.9637 psi) for the A340 and 120 bars (1740.4524 psi) for the A330.

NOTE:The cylinder is correctly pressurized when the pointer of the pressure gauge is in the green area.

Tighten the filling valve nut with your hand.

Remove the extension adapter from the filling valve when the pressure is stable.

Tighten the filling valve nut to the specified torque value.

...

Close-up

...

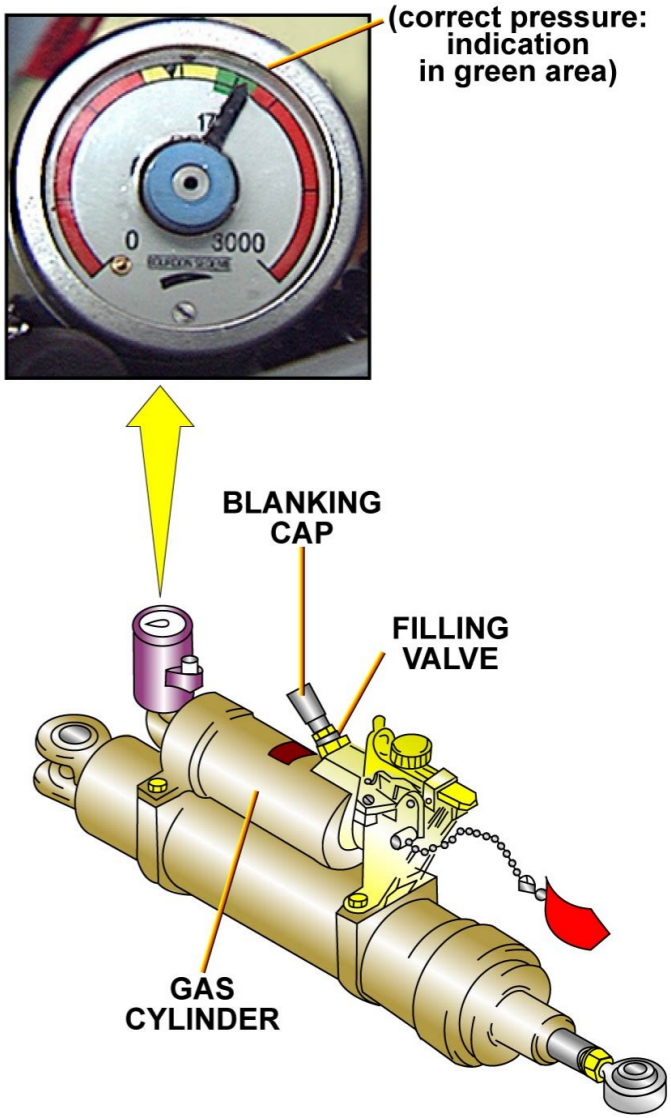

DISCHARGING/CHARGING OF THE DOOR DAMPER AND EMERGENCY OPERATION CYLINDER

Discharging/Charging of the Door Damper and Emergency Operation Cylinder

...

- ✓ **Job set-up**

...

- ✓ **Procedure**
  - ...
  - ✓ **Discharging of the Cylinder**
  - ...
  - ✓ **Charging of the Cylinder**
  - ...

...

- ✓ **Close-up**

...

TASK COMPLETED

DOORS SYSTEM BASE MAINTENANCE (3)

REMOVAL OF THE DOOR SEAL

The AMM procedure is the same for all passenger / crew doors.
Make sure that the circuit breakers 2MJ and 3MJ are opened, safetied and tagged.
Remove the nuts.
Remove the screws and the four corner retainers.
Remove the screws and the retainers.
Remove the door seal from the passenger/crew door.
Put a warning notice on the door to warn people that the door seal has been removed.
The task has been completed.

Removal of the Door Seal
...

Job set-up
...

Open, safety and tag these circuit breakers:

721VU	DOORS &SLIDES CTL	3MJ	N12 (for A340)
721VU	DOORS &SLIDES CTL	3MJ	N12 (fro A330)
722VU	DOORS &SLIDES CTL	2MJ	P41

...

Procedure
...

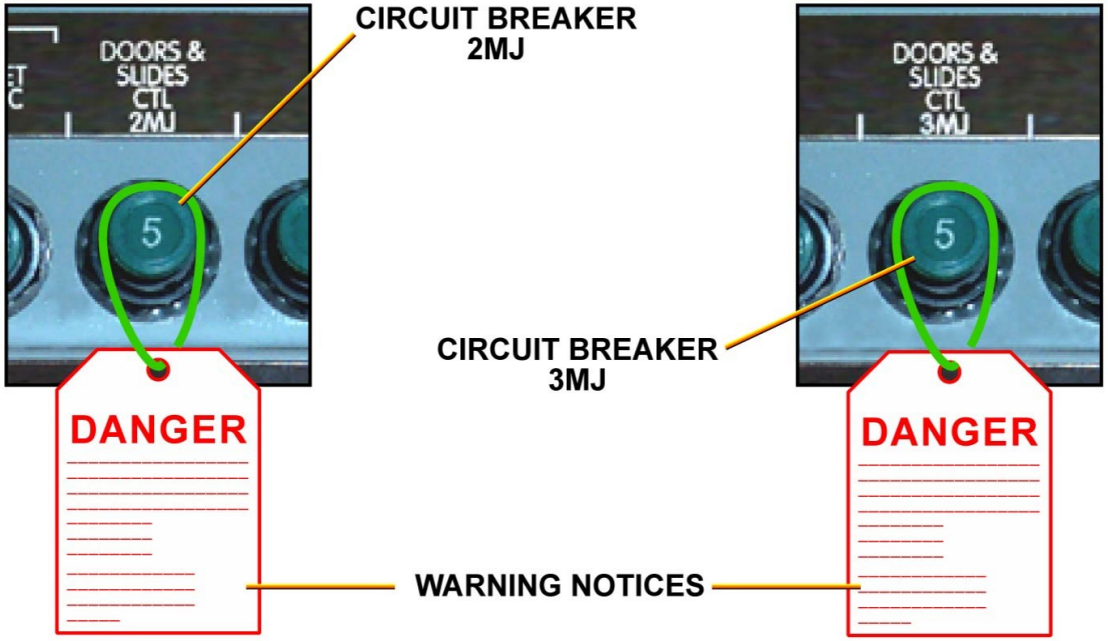

REMOVAL OF THE DOOR SEAL

Removal of the Door Seal

...

✓ **Job set-up**

...

Procedure

...

✓ Remove the nuts.

✓ Remove the screws and the four corner retainers.

✓ Remove the screws and the retainers.

✓ Remove the door seal from the passenger/crew door.

⇨ Put a warning notice on the door to warn people that the door seal has been removed.

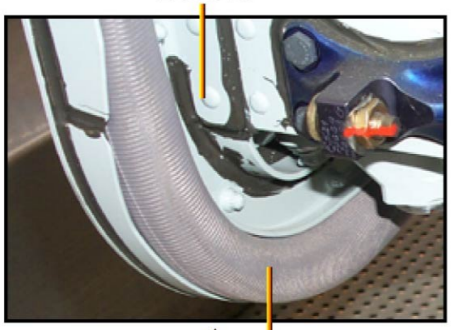

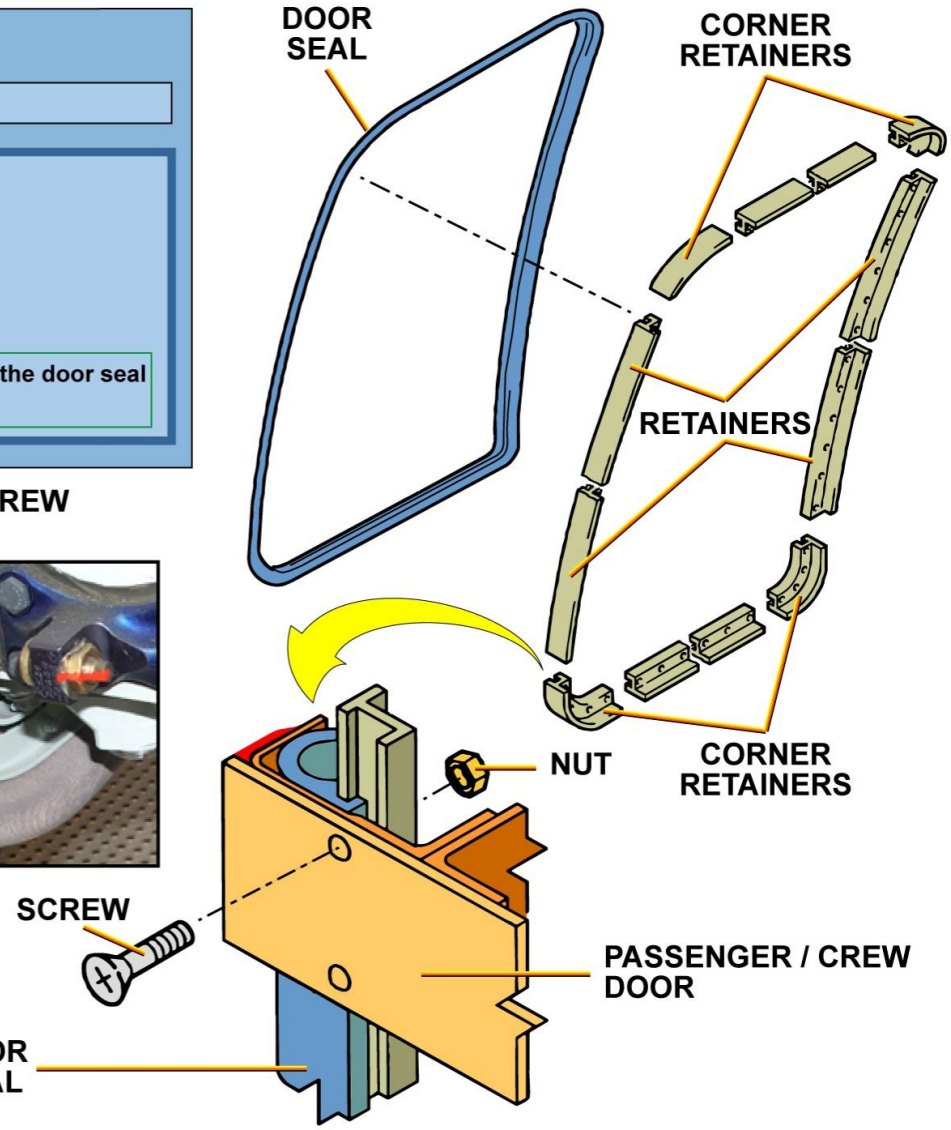

REMOVAL OF THE DOOR SEAL

Removal of the Door Seal

...

✓ **Job set-up**

...

✓ **Procedure**

...

TASK COMPLETED

DOORS SYSTEM BASE MAINTENANCE (3)

INSTALLATION OF THE DOOR SEAL

The AMM procedure is the same for all passenger / crew doors.
Make sure that the circuit breakers 2MJ and 3MJ are opened, safetied and tagged.
Clean and do a visual inspection of the component interface and the adjacent area. Make sure that retainers are clean and in correct condition.
Clean the countersinks with a nonmetallic scraper and with adapted cleaning agents.
Put the door seal in position on the passenger/crew door.
Apply a SEALANT BEAD to the leading edge of the forward passenger door before you install the screws. Apply SEALANT on the screws and install them through the door.
Install the retainers, screws and nuts. Make sure the seal is correctly installed, then tighten the nuts to the specified torque value. Apply COMMON GREASE to the door seal. Remove the unwanted sealant from around the screw heads with a lint free cloth. Apply STRUCTURE PAINT to the nuts. Do a repair of any paint damage caused on the outer skin panel of the door by the removal / installation of screws.
Put the aircraft back to its initial configuration.
The task has been completed.

Installation of the Door Seal

...

Job set-up

...

Make sure that these circuit breakers are opened, safetied and tagged:

721VU	DOORS &SLIDES CTL	3MJ	N12 (for A340)
721VU	DOORS &SLIDES CTL	3MJ	N12 (for A340)
722VU	DOORS &SLIDES CTL	2MJ	P41

...

Clean the component interface and/or the adjacent area.
Do a visual inspection of the component interface and/or the adjacent area.
Make sure that the parts retained from the removed component are clean and in the correct condition.
Clean the countersinks with a nonmetallic scraper and CLEANING AGENTS.

Procedure

...

Close-up

...

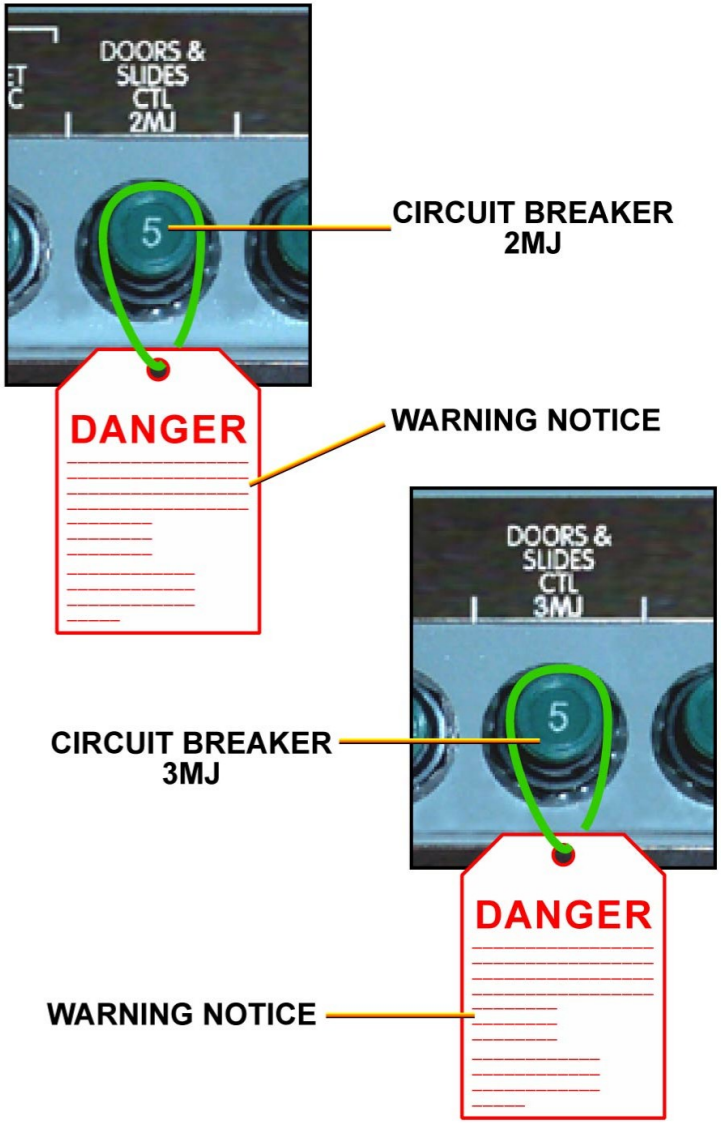

INSTALLATION OF THE DOOR SEAL

Installation of the Door Seal

...

Job set-up

...

Make sure that these circuit breakers are opened, safetied and tagged:

721VU	DOORS &SLIDES CTL	3MJ	N12 (for A340)
721VU	DOORS &SLIDES CTL	3MJ	N12 (for A340)
722VU	DOORS &SLIDES CTL	2MJ	P41

...

Clean the component interface and/or the adjacent area.
Do a visual inspection of the component interface and/or the adjacent area.
Make sure that the parts retained from the removed component are clean and in the correct condition.
Clean the countersinks with a nonmetallic scraper and CLEANING AGENTS.

Procedure

...

Close-up

...

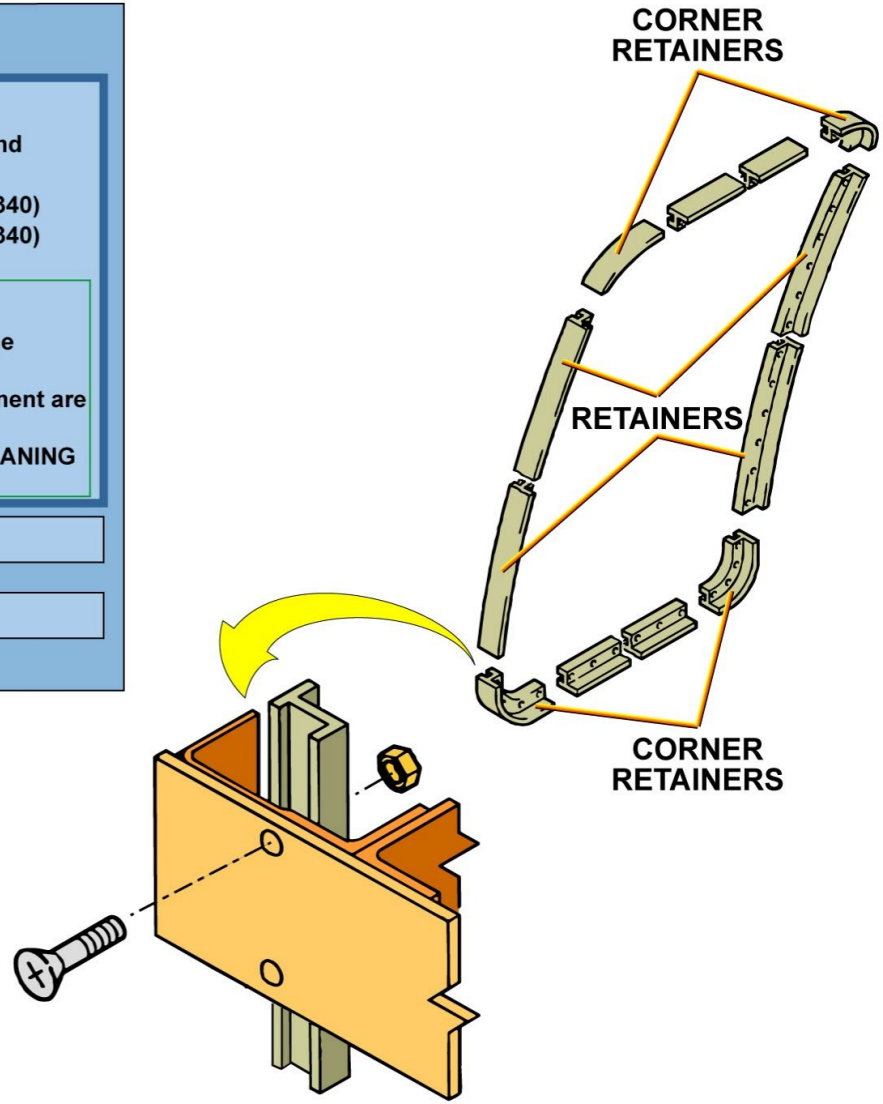

INSTALLATION OF THE DOOR SEAL

Installation of the Door Seal

...

Job set-up

...

Procedure

...

Put the door seal in position on the passenger/crew door.
Apply a SEALANT bead to the leading edge of the forward pax door before you install the screws.
Apply an SEALANT on the screws and install through the door.
Install the retainers, screws and nuts.
NOTE: Make sure that the seal is installed correctly.
TORQUE tighten the nuts to the specified value torque.
Apply an COMMON GREASE to the door seal.
Remove the unwanted sealant from around the screw heads with a lint free cloth.
Apply STRUCTURE PAINTS to the nuts.
Do a repair of any paint damage caused to the outer skin panel of the door by the removal / installation of screws.

Close-up

...

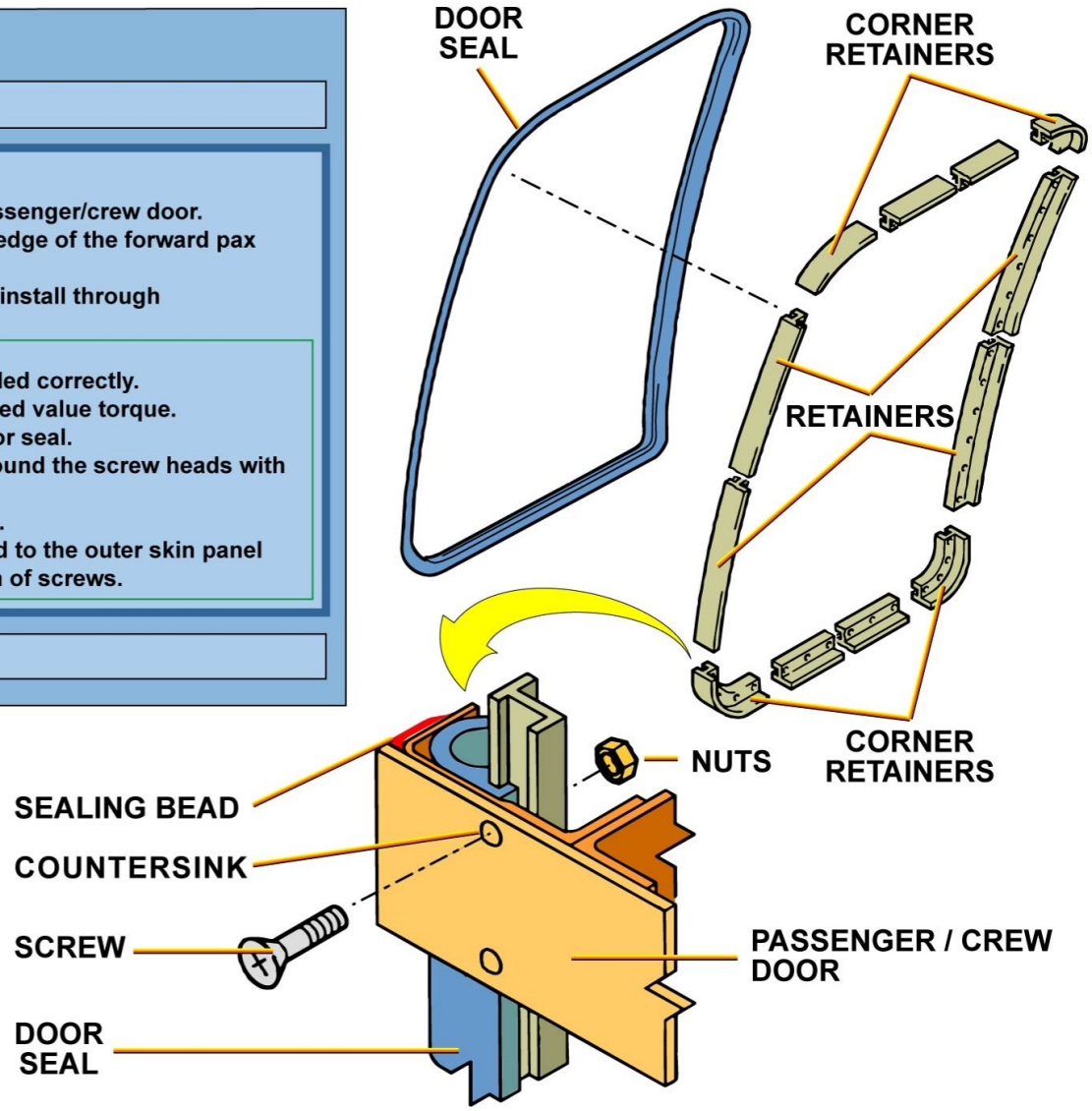

INSTALLATION OF THE DOOR SEAL

Installation of the Door Seal

...

✓ Job set-up

...

✓ Procedure

...

⇨ Close-up

...

Put back the aircraft to its initial configuration.

...

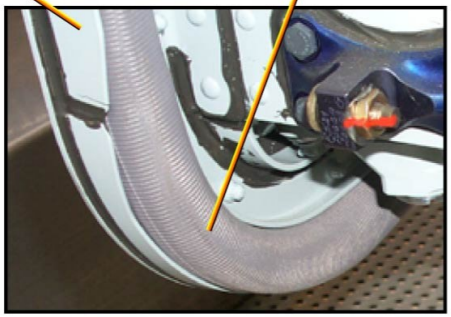

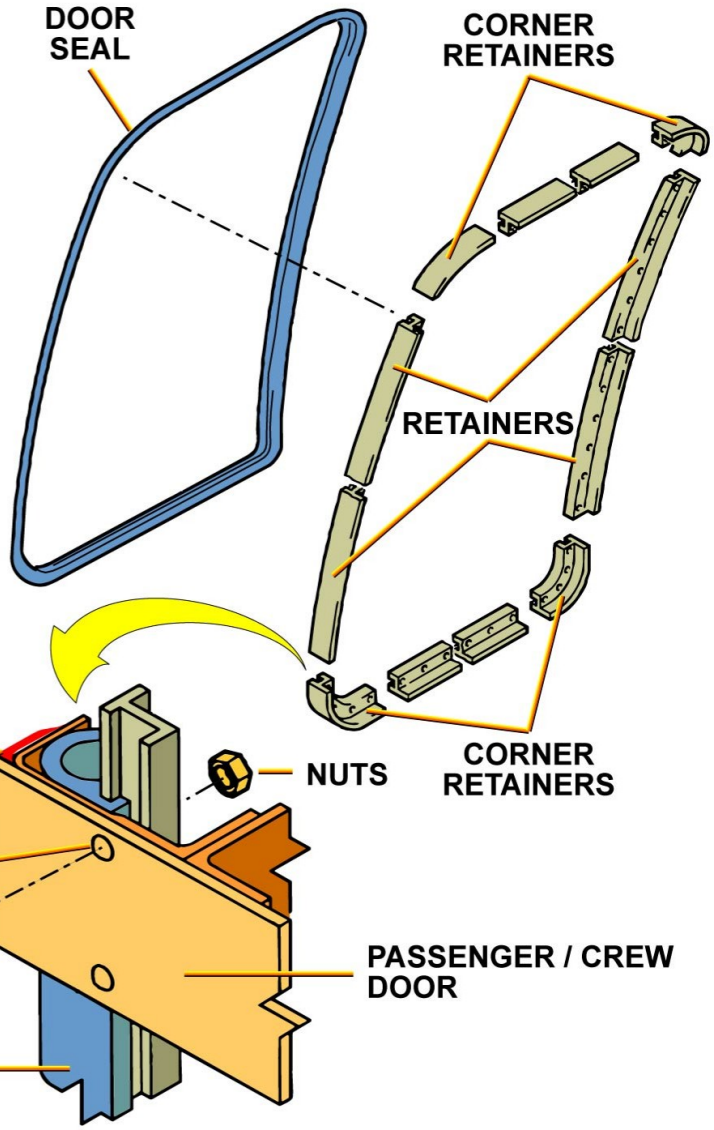

INSTALLATION OF THE DOOR SEAL

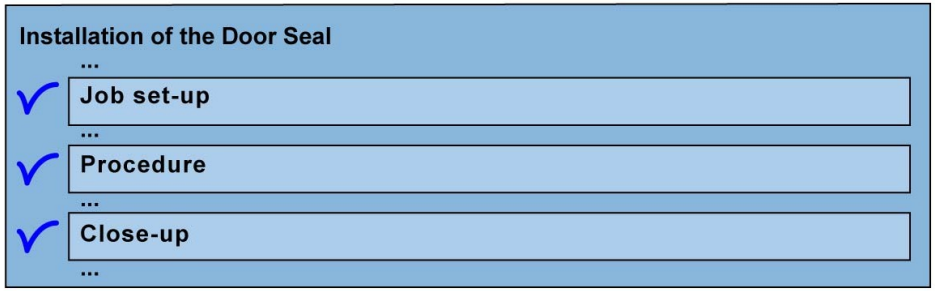

TASK COMPLETED

INSTALLATION OF THE DOOR SEAL

DOORS SYSTEM BASE MAINTENANCE (3)

BITE TEST OF THE AUTONOMOUS STANDBY POWER SUPPLY UNIT (ASPSU)

The BITE test of the Autonomous Standby Power Supply Unit (ASPSU) is operated from the built-in test panel.
Make sure that the circuit breakers 2MJ and 3MJ are closed.
To initiate the test, push the TEST P/B switch on the ASPSU. All Fault and OK LEDs come on.
After approximately 10 seconds the Fault LEDs go off and the OK LEDs stay on.
After approximately 1 minute, the test automatically ends and the OK LEDs go off.
The task has been completed.

BITE Test of the Autonomous Standby Power Supply Unit (ASPSU).

...

Job set-up

...

Make sure that the circuit breakers are closed:

721VU	DOORS &SLIDES CTL	3MJ	N12 (for A340)
721VU	DOORS &SLIDES CTL	3MJ	N09 (for A330)
722VU	DOORS &SLIDES CTL	2MJ	P41

...

Procedure

...

Close-up

...

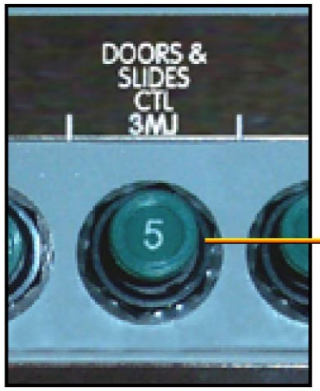

CIRCUIT BREAKER 3MJ

CIRCUIT BREAKER 2MJ

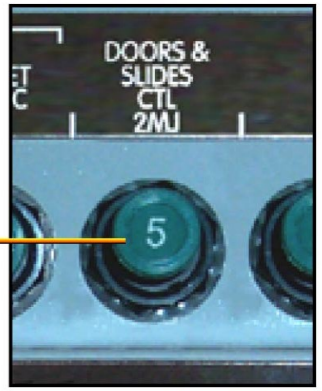

BITE TEST OF THE AUTONOMOUS STANDBY POWER SUPPLY UNIT (ASPSU)

BITE Test of the Autonomous Standby Power Supply Unit (ASPSU).

...

Job set-up

...

Procedure

...

On the ASPSU: - push the TEST P/BSW.	On the ASPSU: - the UNIT, 28VDC, OUTPUT, BATT 1 and BATT 2 FAULT LEDs come on. - the UNIT, 28VDC, OUTPUT, BATT 1 and BATT 2 OK LEDs come on.

After approx.10 s:
- the UNIT, 28VDC, OUTPUT, BATT 1 and BATT 2 FAULT LEDs go off.
- the UNIT, 28VDC, OUTPUT, BATT 1 and BATT 2 OK LEDs stay on.

After approx.1 minute (when the test is automatically ended):
- the UNIT, 28VDC, OUTPUT, BATT 1 and BATT 2 OK LEDs go off.

Close-up

...

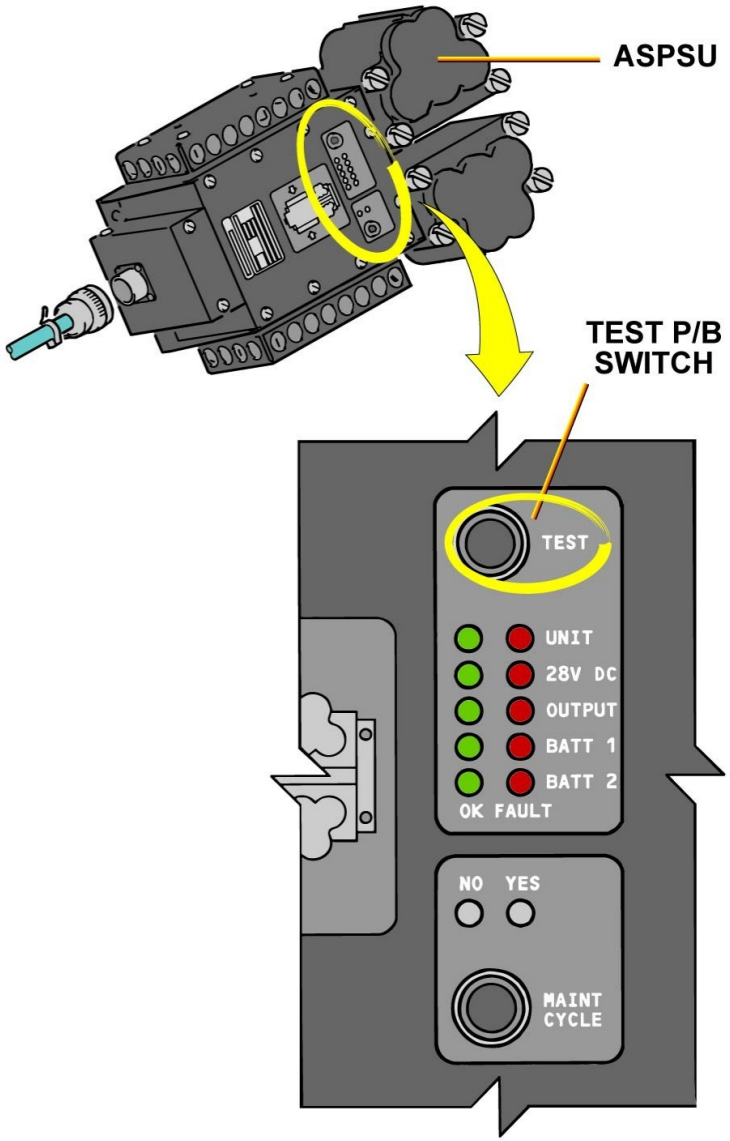

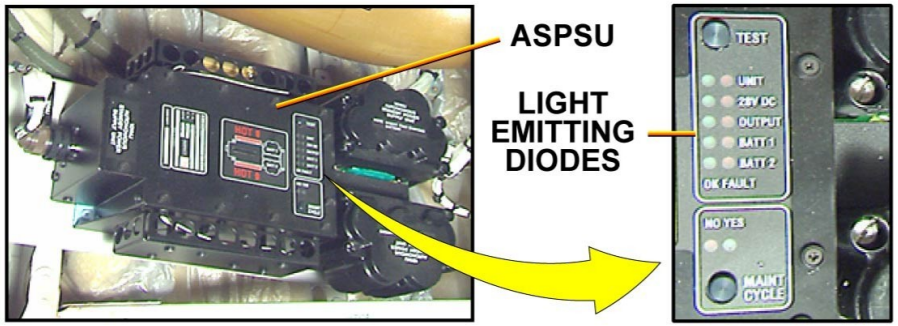

BITE TEST OF THE AUTONOMOUS STANDBY POWER SUPPLY UNIT (ASPSU)

BITE Test of the Autonomous Standby Power Supply Unit (ASPSU).

...

Job set-up

...

Procedure

...

On the ASPSU: - push the TEST P/BSW.	On the ASPSU: - the UNIT, 28VDC, OUTPUT, BATT 1 and BATT 2 FAULT LEDs come on. - the UNIT, 28VDC, OUTPUT, BATT 1 and BATT 2 OK LEDs come on.
	After approx.10 s: - the UNIT, 28VDC, OUTPUT, BATT 1 and BATT 2 FAULT LEDs go off. - the UNIT, 28VDC, OUTPUT, BATT 1 and BATT 2 OK LEDs stay on.
	After approx.1 minute (when the test is automatically ended): - the UNIT, 28VDC, OUTPUT, BATT 1 and BATT 2 OK LEDs go off.

Close-up

...

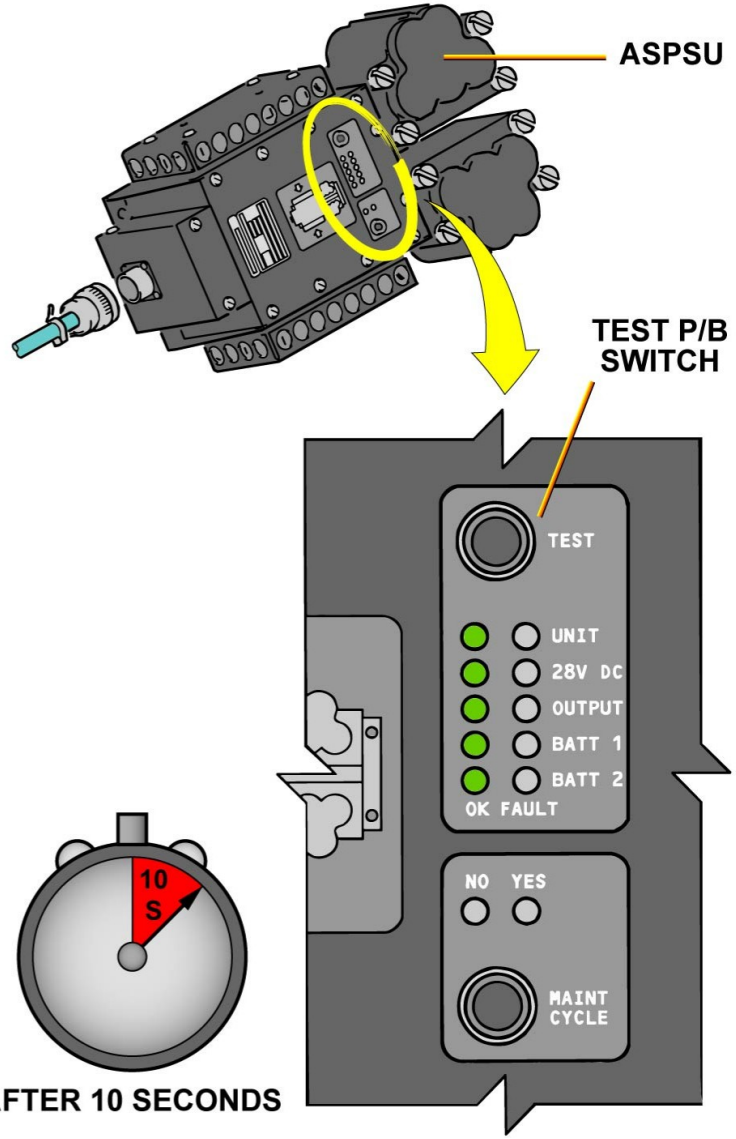

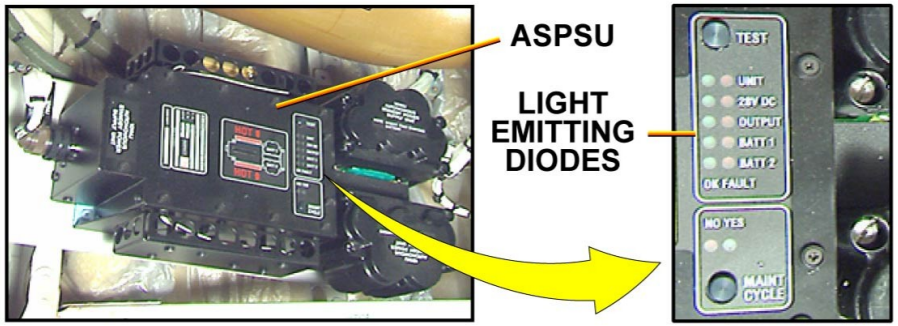

BITE TEST OF THE AUTONOMOUS STANDBY POWER SUPPLY UNIT (ASPSU)

BITE Test of the Autonomous Standby Power Supply Unit (ASPSU).

...

Job set-up

...

Procedure

...

On the ASPSU:
- push the TEST P/BSW.

On the ASPSU:
- the UNIT, 28VDC, OUTPUT, BATT 1 and BATT 2 FAULT LEDs come on.
- the UNIT, 28VDC, OUTPUT, BATT 1 and BATT 2 OK LEDs come on.

After approx.10 s:
- the UNIT, 28VDC, OUTPUT, BATT 1 and BATT 2 FAULT LEDs go off.
- the UNIT, 28VDC, OUTPUT, BATT 1 and BATT 2 OK LEDs stay on.

After approx.1 minute (when the test is automatically ended):
- the UNIT, 28VDC, OUTPUT, BATT 1 and BATT 2 OK LEDs go off.

Close-up

...

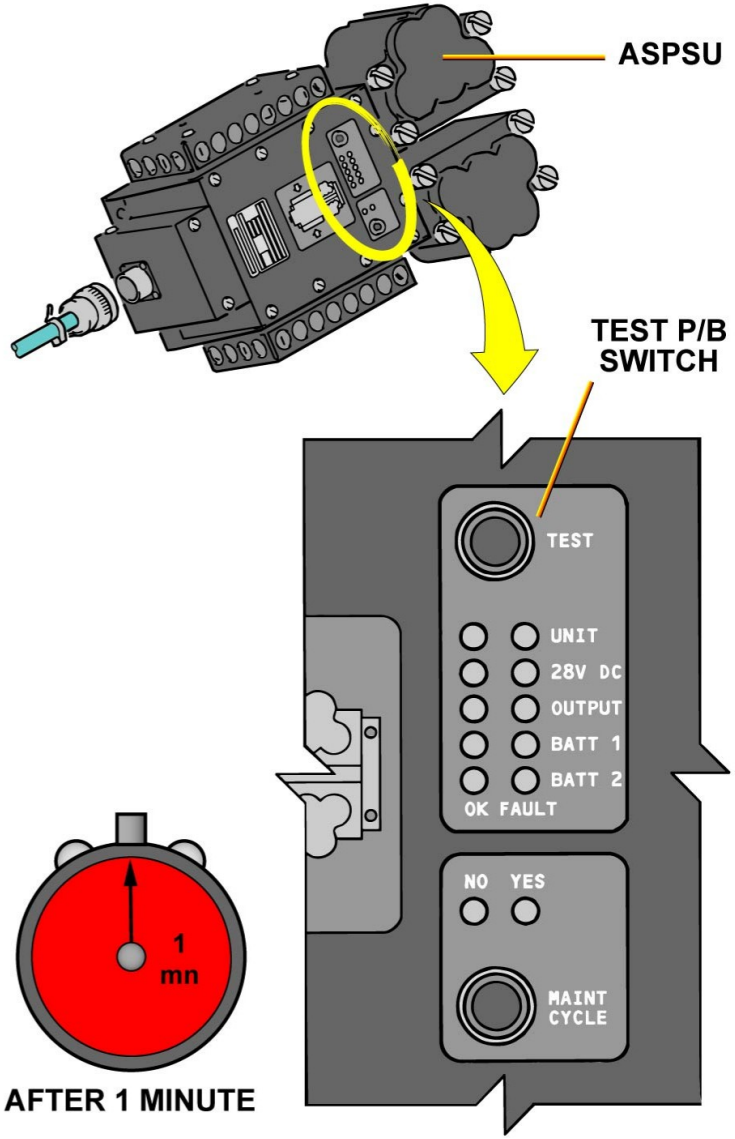

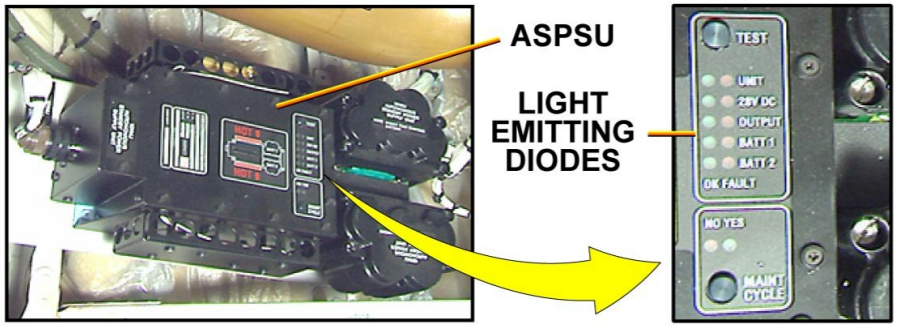

BITE TEST OF THE AUTONOMOUS STANDBY POWER SUPPLY UNIT (ASPSU)

Battery Capacity Test of the Autonomous Standby Power Supply Unit (ASPSU)

...

✓ **Job set-up**

...

✓ **Procedure**

...

✓ **Close-up**

...

TASK COMPLETED

DOORS SYSTEM BASE MAINTENANCE (3)

BATTERY CAPACITY TEST OF THE AUTONOMOUS STANDBY POWER SUPPLY UNIT (ASPSU)

The Battery Capacity test of the ASPSU is operated from the built-in test panel.
Make sure that the circuit breakers 2MJ and 3MJ are closed.
To initiate the test, push both TEST P/B and MAINT CYCLE P/B switches on the ASPSU. The BATT 1 and BATT2 Fault and OK LEDs come on.
After approximately 3 hours, the BATT 1 and BATT2 Fault LEDs go off and the BATT 1 and BATT2 OK LEDs stay on.
To end the test, push both TEST P/B and the MAINT CYCLE P/B switches on the ASPSU. The BATT 1 and BATT2 OK LEDs go off.
The task is complete.

Battery Capacity Test of the Autonomous Standby Power Supply Unit (ASPSU).

...

Job set-up

...

Make sure that the circuit breakers are closed:

721VU	DOORS &SLIDES CTL	3MJ	N12 (for A340)
721VU	DOORS &SLIDES CTL	3MJ	N09 (for A330)
722VU	DOORS &SLIDES CTL	2MJ	P41

...

Procedure

...

Close-up

...

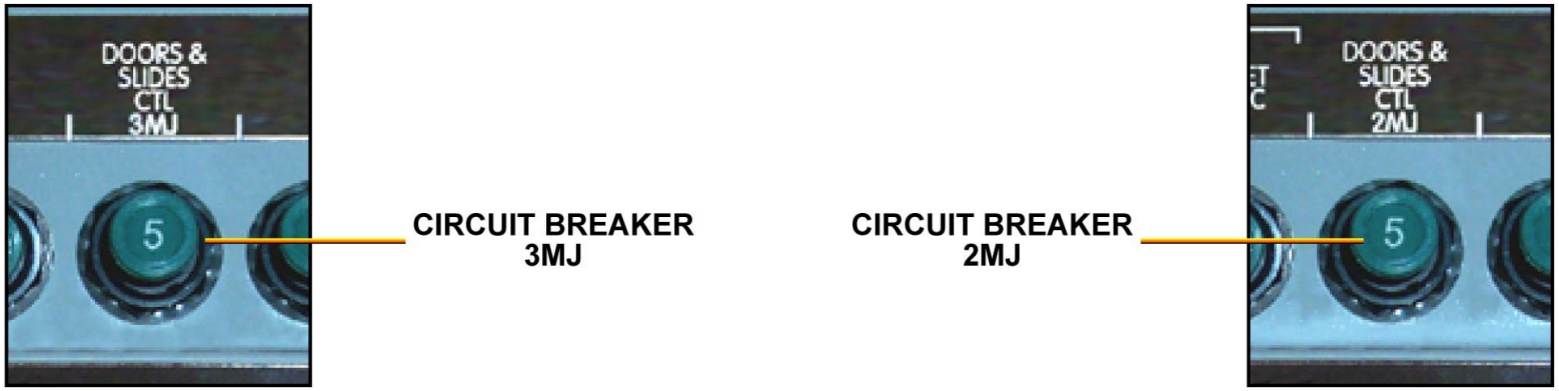

BATTERY CAPACITY TEST OF THE AUTONOMOUS STANDBY POWER SUPPLY UNIT (ASPSU)

Battery Capacity Test of the Autonomous Standby Power Supply Unit (ASPSU)

...

Job set-up

...

Procedure

...

On the ASPSU: - push the TEST P/BSW together with the MAINT CYCLE P/BSW.	On the ASPSU: - the BATT 1 and BATT 2 FAULT LEDs come on. - the BATT 1 and BATT 2 OK LEDs come on.
	After approx. 3 hrs: - the BATT 1 and BATT 2 FAULT LEDs go off. - the BATT 1 and BATT 2 OK LEDs stay on.
- push the TEST P/BSW together with the MAINT CYCLE P/BSW.	- the BATT 1 and BATT 2 OK LEDs go off.

Close-up

...

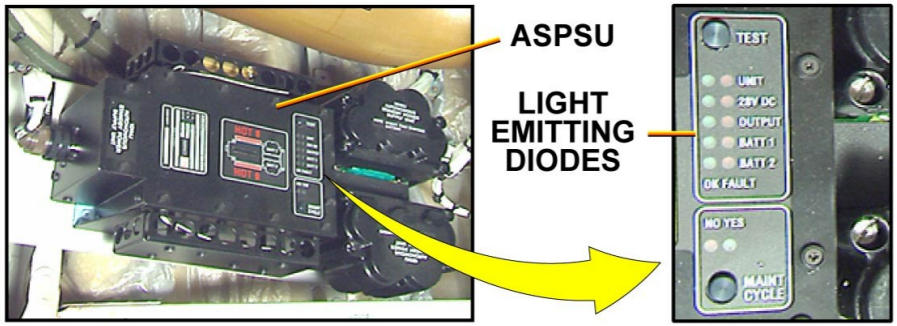

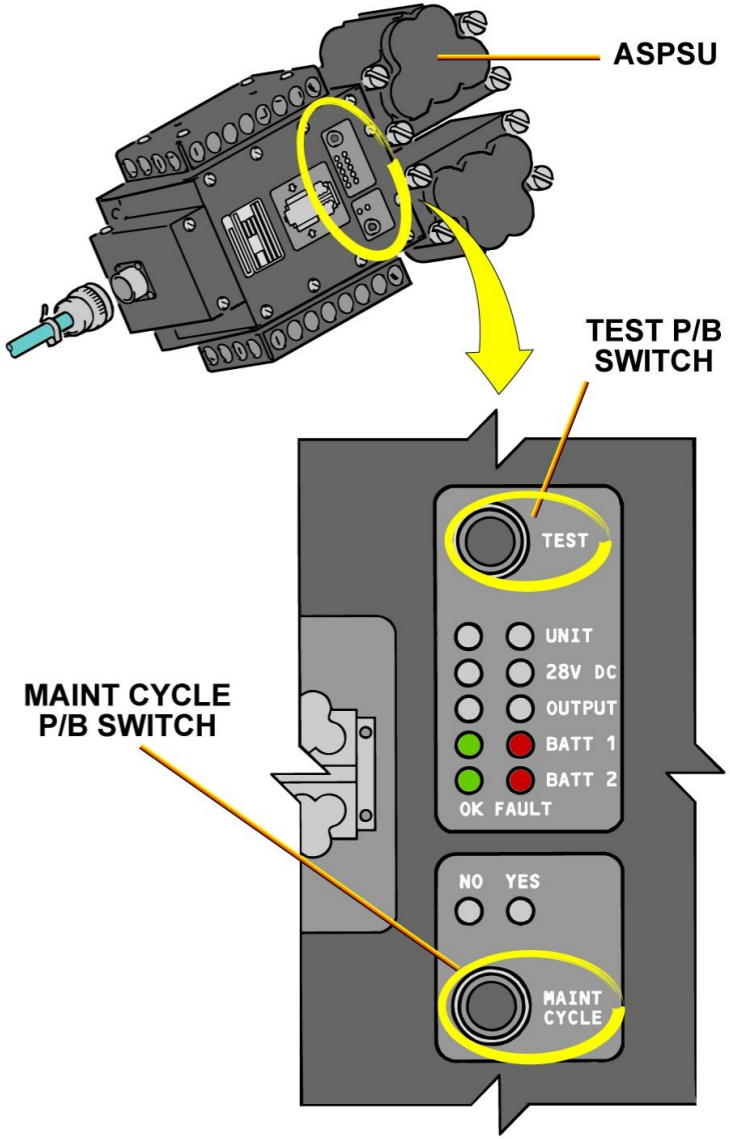

BATTERY CAPACITY TEST OF THE AUTONOMOUS STANDBY POWER SUPPLY UNIT (ASPSU)

Battery Capacity Test of the Autonomous Standby Power Supply Unit (ASPSU)

...

Job set-up

...

Procedure

...

On the ASPSU: - push the TEST P/BSW together with the MAINT CYCLE P/BSW.	On the ASPSU: - the BATT 1 and BATT 2 FAULT LEDs come on. - the BATT 1 and BATT 2 OK LEDs come on.
	After approx. 3 hrs: - the BATT 1 and BATT 2 FAULT LEDs go off. - the BATT 1 and BATT 2 OK LEDs stay on.
- push the TEST P/BSW together with the MAINT CYCLE P/BSW.	- the BATT 1 and BATT 2 OK LEDs go off.

Close-up

...

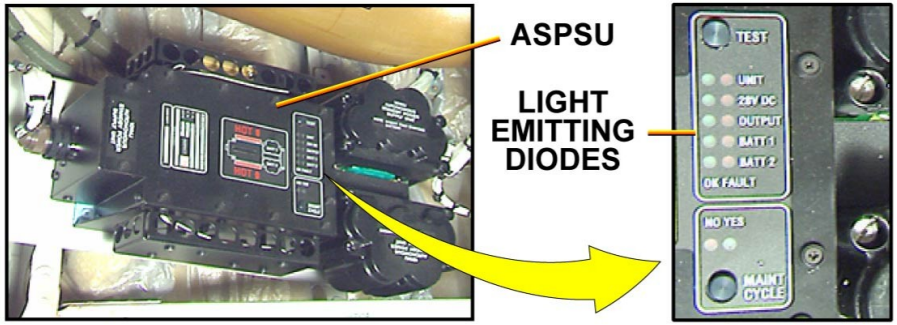

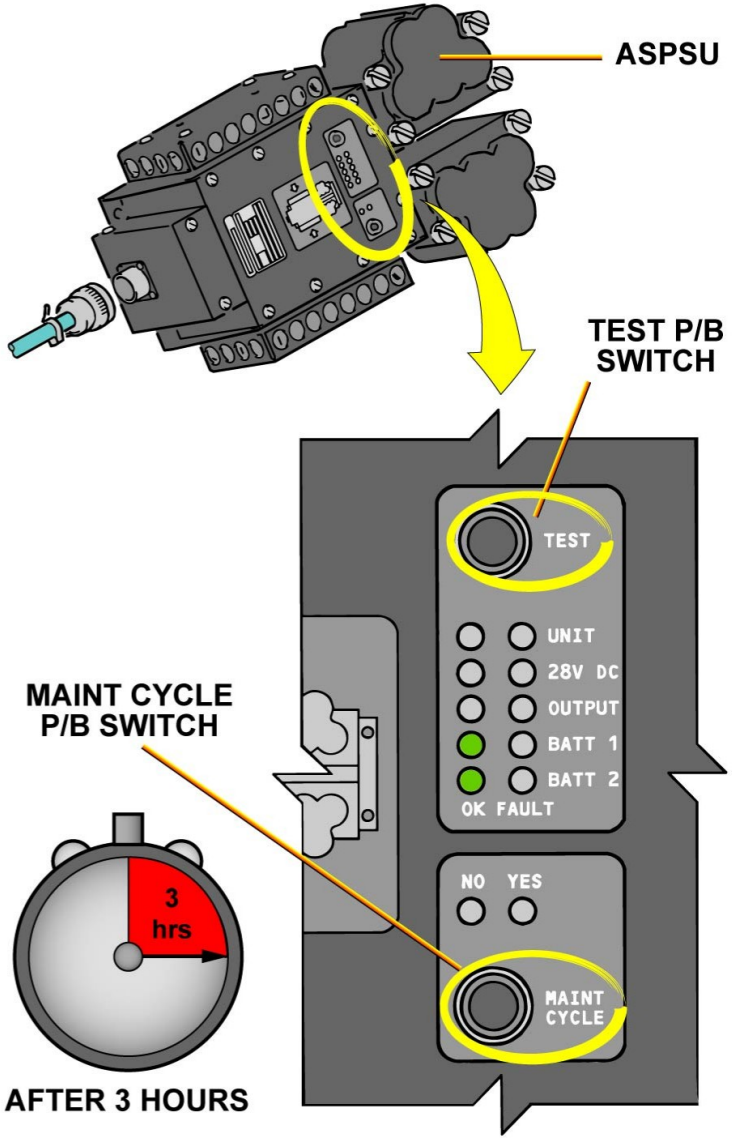

BATTERY CAPACITY TEST OF THE AUTONOMOUS STANDBY POWER SUPPLY UNIT (ASPSU)

G7508471 - G3NT1T0 - FM52Y2BASEMCE02

Battery Capacity Test of the Autonomous Standby Power Supply Unit (ASPSU)

...

✓ **Job set-up**

...

✓ **Procedure**

...

✓ **Close-up**

...

TASK COMPLETED

This Page Intentionally Left Blank

G7508471 - G3NT1T0 - FM52Y2BASEMCE02

AIRBUS S.A.S.
31707 BLAGNAC cedex, FRANCE
STM
REFERENCE G7508471
NOVEMBER 2008
PRINTED IN FRANCE
AIRBUS S.A.S. 2008
ALL RIGHTS RESERVED

AN EADS COMPANY

A330-200/300
TECHNICAL TRAINING MANUAL
MAINTENANCE COURSE - T1 (LVL 2&3) (RR Trent 700)
POWER PLANT (RR Trent 700)

This document must be used for training purposes only

Under no circumstances should this document be used as a reference

It will not be updated.

All rights reserved
No part of this manual may be reproduced in any form,
by photostat, microfilm, retrieval system, or any other means,
without the prior written permission of AIRBUS S.A.S.

AIRBUS Environmental Recommendation
Please consider your environmental responsability before printing this document.

POWER PLANT (RR TRENT 700)

Power Plant Line Maintenance Briefing (2) 2

GENERAL

Power Plant Installation D/O (3) 32
Nacelle D/O (3) 60
Engine D/O (3) 78

FUEL SYSTEM

Engine Fuel System D/O (3) 106
Engine Limit Protection D/O (3) 134

FULL AUTHORITY DIGITAL ENGINE CONTROL (FADEC)

FADEC Principle (3) 144
FADEC D/O (3) 152
EIVMU Interfaces (3) 186
FADEC Power Supply D/O (3) 196

IGNITION AND STARTING

Ignition and Starting D/O (3) 202

AIR SYSTEM

Airflow Control System D/O (3) 250

COOLING

Engine Cooling System D/O (3) 260

ENGINE CONTROLS

Thrust Control D/O (3) 270
Engine Master Control D/O (3) 286

ENGINE INDICATING

Vibration Monitoring System D/O (3) 292

THRUST REVERSER

Thrust Reverser System D/O (3) 298

OIL SYSTEM

Oil System D/O (3) 330

MAINTENANCE PRACTICE

Power Plant System Base Maintenance (3) 376
Engine Base Maintenance (3) 408

G7508471 - G3NT1T0

POWER PLANT LINE MAINTENANCE BRIEFING (2)

SYSTEM OVERVIEW

POWERPLANT INTRODUCTION

The Rolls-Royce RB-211Trent 772 series engine is an axial flow, triple spool, high bypass-ratio, turbo-fan engine. The RR RB-211Trent 772 powers the A330 aircraft and produces 71,000 lbs Thrust.

G7508471 - G3NT1T0 - FM70B100000071

ENGINE	MAX THRUST RATING	FLAT RATED TEMP	BYPASS RATIO	DRY WEIGHT
RB 211 TRENT 772	71.100 lbs	ISA + 15	5.05:1	6 160 Kg (13.580 lb)
RB 211 TRENT 772B		ISA + 22		
RB 211 TRENT 772C		ISA + 22		

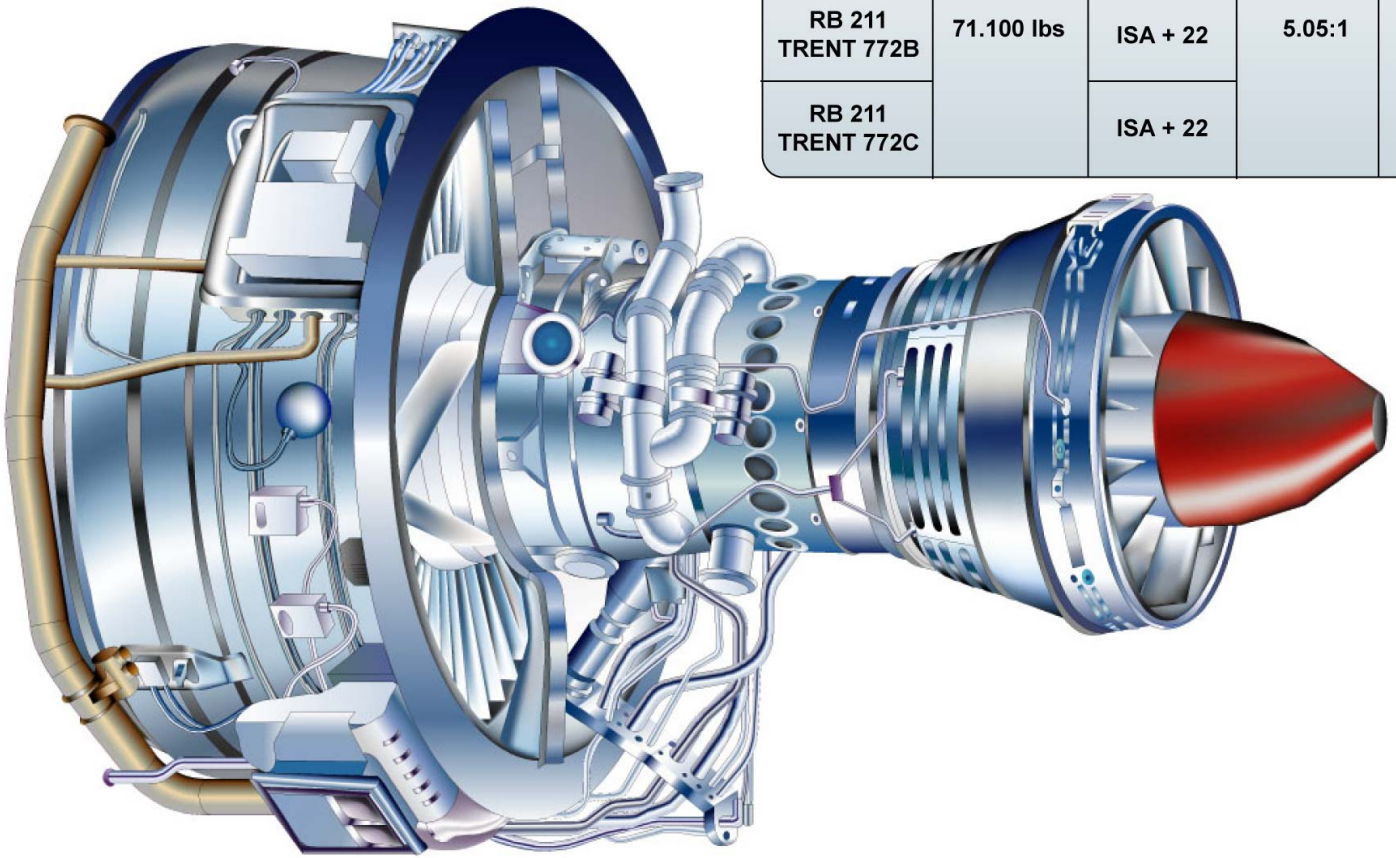

SYSTEM OVERVIEW - POWERPLANT INTRODUCTION

POWER PLANT LINE MAINTENANCE BRIEFING (2)

SYSTEM OVERVIEW (continued)

POWER PLANT INSTALLATION

The powerplant installation includes the engine inlet, the engine assembly, the exhaust common nozzle assembly, the fan cowls and thrust reverser assemblies. The engine is attached to the aircraft pylon by the FWD and AFT engine mounts, which support the weight of the engine and transmit thrust loads to the aircraft structure.

G7508471 - G3NT1T0 - FM70B100000071

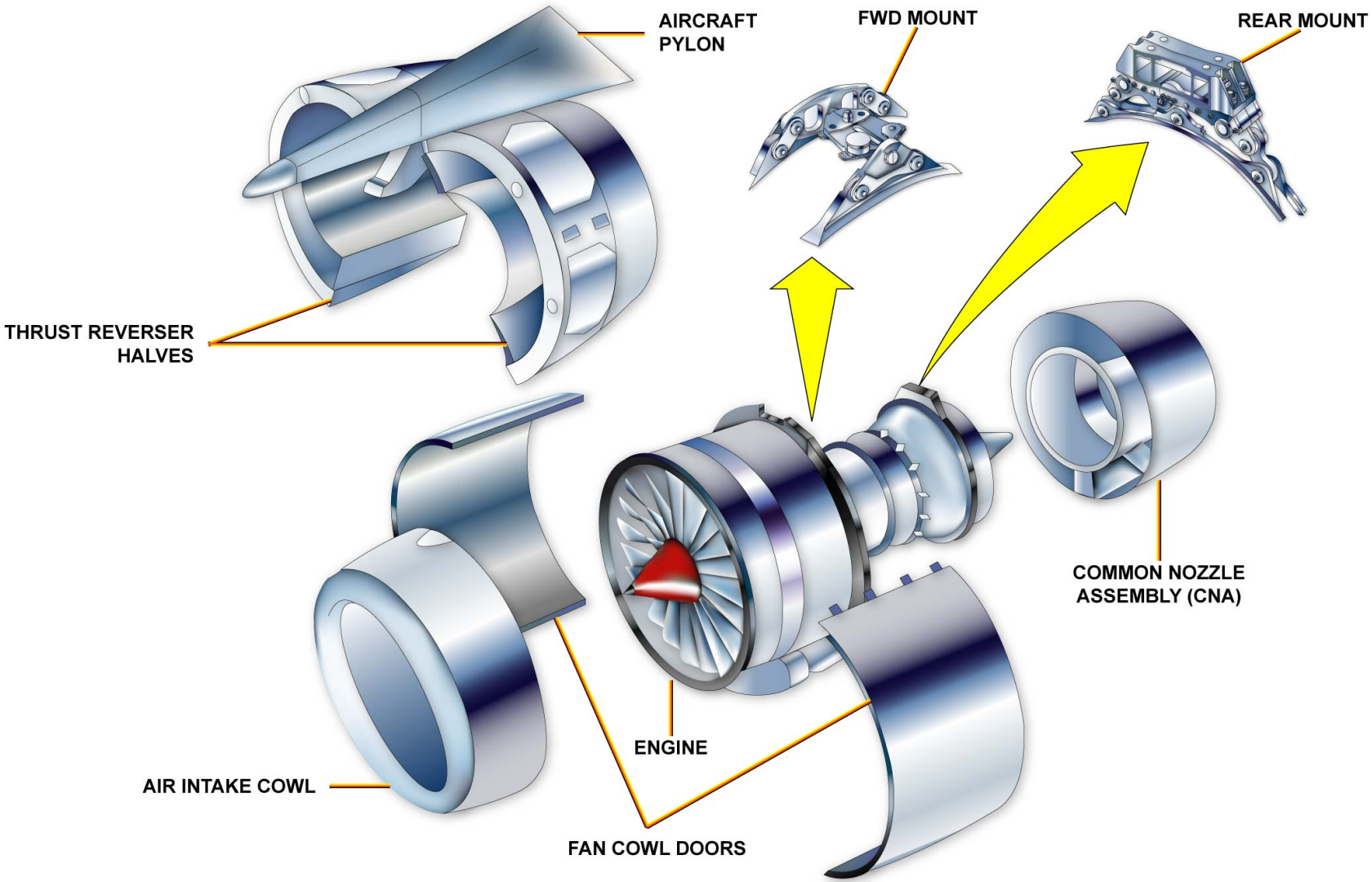

SYSTEM OVERVIEW - POWER PLANT INSTALLATION

G7508471 - G3NT1T0 - FM70B100000071

POWER PLANT LINE MAINTENANCE BRIEFING (2)

SYSTEM OVERVIEW (continued)

FADEC

In order to increase engine reliability and efficiency, the Full Authority Digital Engine Control (FADEC) gives full range of engine control to achieve steady state and transient engine performances when operated in combination with aircraft subsystems.
Each engine is controlled by an Engine Electronic Controller (EEC), which is a dual channel computer located on the engine fan case on the left hand side. The EEC controls the engine during start and all operations. The EEC manages engine thrust and protects against overspeed and over-temperature by controlling the engine sub-systems. The EEC also monitors all engine subsystems and sensors for failure.
When the engine is running, a dual-output EEC Dedicated alternator driven by the gearbox, supplies the power to the FADEC.
The FADEC system has a dual channel EEC and the following peripherals:
- Fuel Metering Unit (FMU),
- EEC Dedicated alternator,
- compressor control systems (VSV, IP / HP Bleed Valves),
- Turbine Impingement Cooling system (TIC),
- start system (starter shutoff valve, ignition exciters),
- thrust reverser system,
- engine sensors,
- electrical harnesses.

G7508471 - G3NT1T0 - FM70B100000071

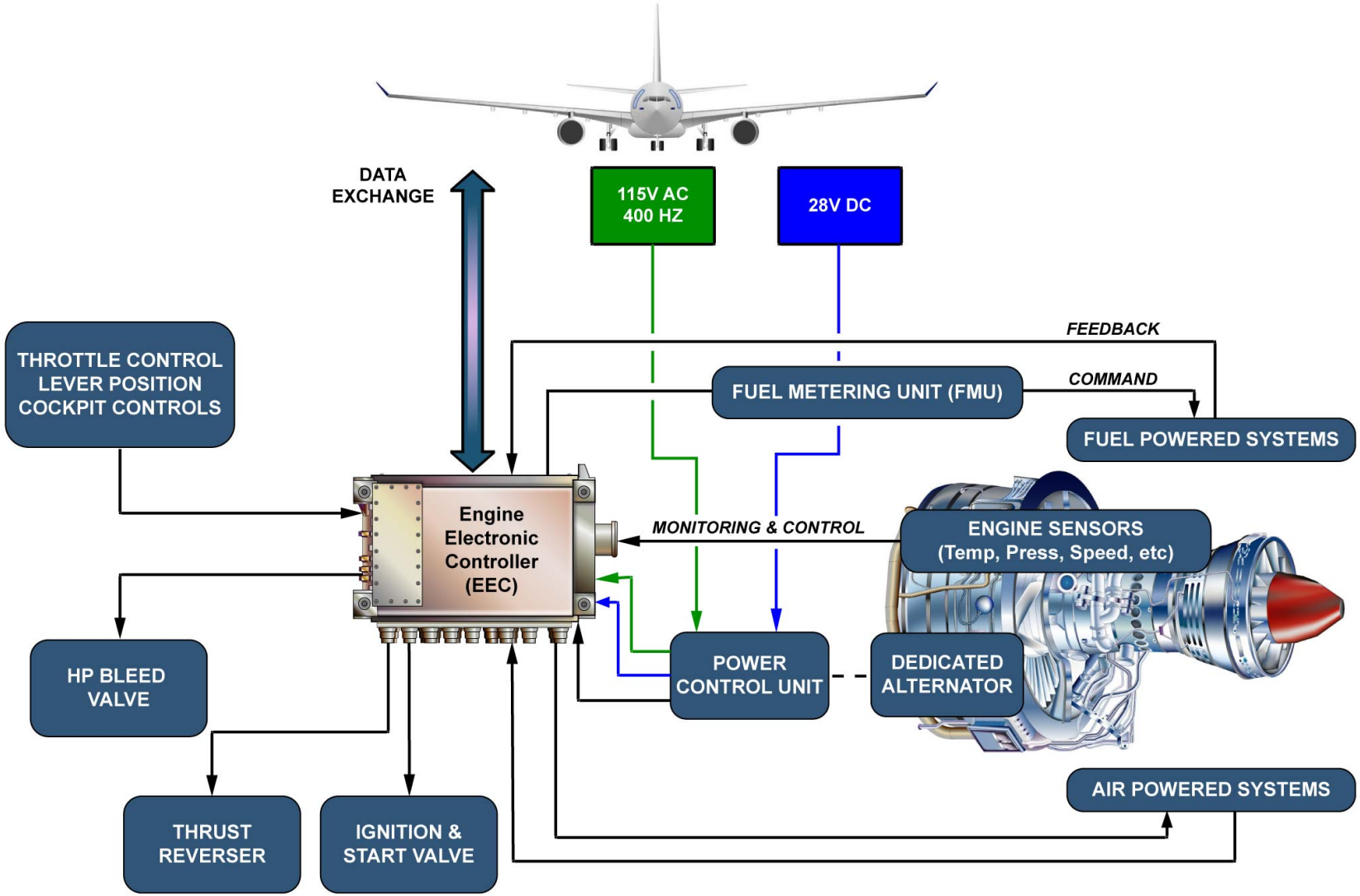

SYSTEM OVERVIEW - FADEC

G7508471 - G3NT1T0 - FM70B100000071

POWER PLANT LINE MAINTENANCE BRIEFING (2)

SERVICING

ENGINE OIL SERVICING

The procedure is as follows:
- pull FADEC C/Bs,
- open the oil servicing access panel on the RH fan cowl door,

NOTE: Make sure that the engine has been shut down for at least 10 minutes before checking the engine oil level.

- check the oil level in the oil tank sight glass.

NOTE: Note: If the oil level is low and the engine has been stopped for more than 6 hours, start the engine. Run the engine at idle for 5 minutes. Shut down the engine, wait 10 minutes and check the oil level again.

The gravity fill procedure is as follows:
- remove the oil filler cap from the oil tank and add oil until the oil reaches the correct level on the sight glass.

The pressure fill procedure is as follows:
- connect a drain hose to the overflow coupling on the oil tank,
- connect the pressure hose to the pressure coupling,
- add oil until the oil reaches the correct level on the sight glass,
- a small quantity of oil will drain from the overflow hose when the oil is at the proper level.

G7508471 - G3NT1T0 - FM70B100000071

✓ ENGINE OIL SERVICING.

CAUTION

YOU MUST WAIT A MINIMUM OF 10 MINUTES AFTER THE ENGINE HAS STOPPED BEFORE YOU CHECK THE ENGINE OIL LEVEL.

IF THE OIL LEVEL IS LOW AND THE ENGINE HAS BEEN STOPPED FOR MORE THAN 6 HOURS, START THE ENGINE:
- RUN THE ENGINE AT IDLE FOR 5 MINUTES,
- SHUT DOWN THE ENGINE, WAIT 10 MINUTES AND CHECK THE OIL LEVEL AGAIN.

OIL SERVICING ACCESS DOORS

OIL TANK

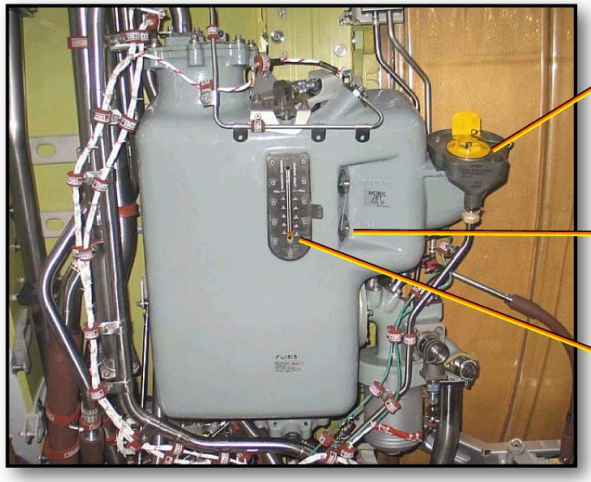

SERVICING - ENGINE OIL SERVICING

POWER PLANT LINE MAINTENANCE BRIEFING (2)

SERVICING (continued)

OPENING AND CLOSING OF THE FAN COWL DOORS

The procedure is as follows:
- release the deflection restraint on the fan cowl door,
- release the cowl latches (See AMM for the proper sequence),

WARNING: Be careful when opening the fan cowl door. Each door weighs 138 lbs. (63 kg.)
- open the cowls to get access to the hold-open rods,
- connect both hold-open rods,
- open the cowls to the middle or fully extended position on the hold-open rods,

WARNING: To prevent accidental closure and possible injury, make sure that the hold-open rods are attached correctly and locked in position.
- close fan cowl doors in the opposite sequence.

WARNING: Do not open the fan cowl doors when the wind speed is more than 60 mph (96 km/h).
Open the fan cowl doors with caution when the wind speed is more than 30 mph (48 km/h).
Do not run the engine above idle power when the fan cowl doors are open and secured with the hold-open rods.

WARNING: To prevent accidental closure and possible injury, make sure that the hold-open rods are attached correctly and locked in position.

G7508471 - G3NT1T0 - FM70B100000071

FAN COWL LATCHES

HOLD OPEN RODS

SERVICING - OPENING AND CLOSING OF THE FAN COWL DOORS

POWER PLANT LINE MAINTENANCE BRIEFING (2)

SERVICING (continued)

OPENING AND CLOSING OF THE THRUST REVERSER DOORS

The procedure is as follows:
- open the fan cowl doors,
- put the thrust reverser Isolation Control Unit (ICU) in the deactivated position,
- open the latch access and pressure relief doors at the bottom of the nacelle,

WARNING: Make sure that the take-up device of the thrust reverser half is engaged before you release the latches. If not, the latches can open quickly and cause injury or damage.

- install and operate the take-up device to take the load off the latches before opening. The take-up device is stowed on a bracket inside the reverser cowl,
- release the hook latches (Check AMM for proper sequence),
- use a 3/8" square drive to release the 2 pin latches,
- disengage the take-up device,
- connect the pump pressure hose to the opening actuator manifold quick disconnect,
- pump to open the door,
- install the FRONT and REAR hold-open rods.

To close:
- pump to open the door and to take the pressure off the hold-open rods,
- disconnect the FRONT and REAR hold-open rods,
- open the pump relief valve and let the doors close slowly,
- when the doors are fully closed, use the take-up device to pull the two halves together,
- secure the pin latches then disconnect the take-up device and stow it,
- secure the rest of the latches and close the access panel.

WARNING: Do not open the thrust reverser when the wind speed is 46 mph (73 km/h) or more. An injury and/or damage may occur if the wind moves the thrust reverser.

WARNING: Make sure that the take-up device of the thrust reverser half is engaged before you release the latches. If not, the latches can open quickly and cause injury or damage.

THRUST REVERSER LATCH ACCESS

TAKE-UP DEVICE

TAKE-UP DEVICE STOWAGE

SERVICING - OPENING AND CLOSING OF THE THRUST REVERSER DOORS

POWER PLANT LINE MAINTENANCE BRIEFING (2)

DAILY CHECKS

INLET AND EXHAUST INSPECTION

A visual inspection of the engine inlet and exhaust should be carried out prior to any engine run.

NOTE: Note: Refer to the AMM (ATA 72) for damage limits.
Inlet Inspection - Check the following areas for damage:
- inlet leading edge,
- inner acoustic liner,
- LP compressor (fan) blades, including each blade leading and trailing edge,
- annulus fillers.

Exhaust Inspection - Check the following areas for damage:
- check stage 4 LP turbine blades for damage/cracks.

NOTE: Note: Very few damage are bearable on the turbine blades. Any cracked blade causes engine removal.

INSPECT ENGINE DRAINS FOR LEAKS

The engine drain mast and pylon drains are designed to isolate fluid leaks from the different areas of the engine to get easier troubleshooting. Any leaks should be investigated. Leakage limits are based on engine running or stopped. Depending on the found leak, dispatch may be permitted.

NOTE: Note: Refer to the AMM (ATA 71) for leakage limits.

G7508471 - G3NT1T0 - FM70B100000071

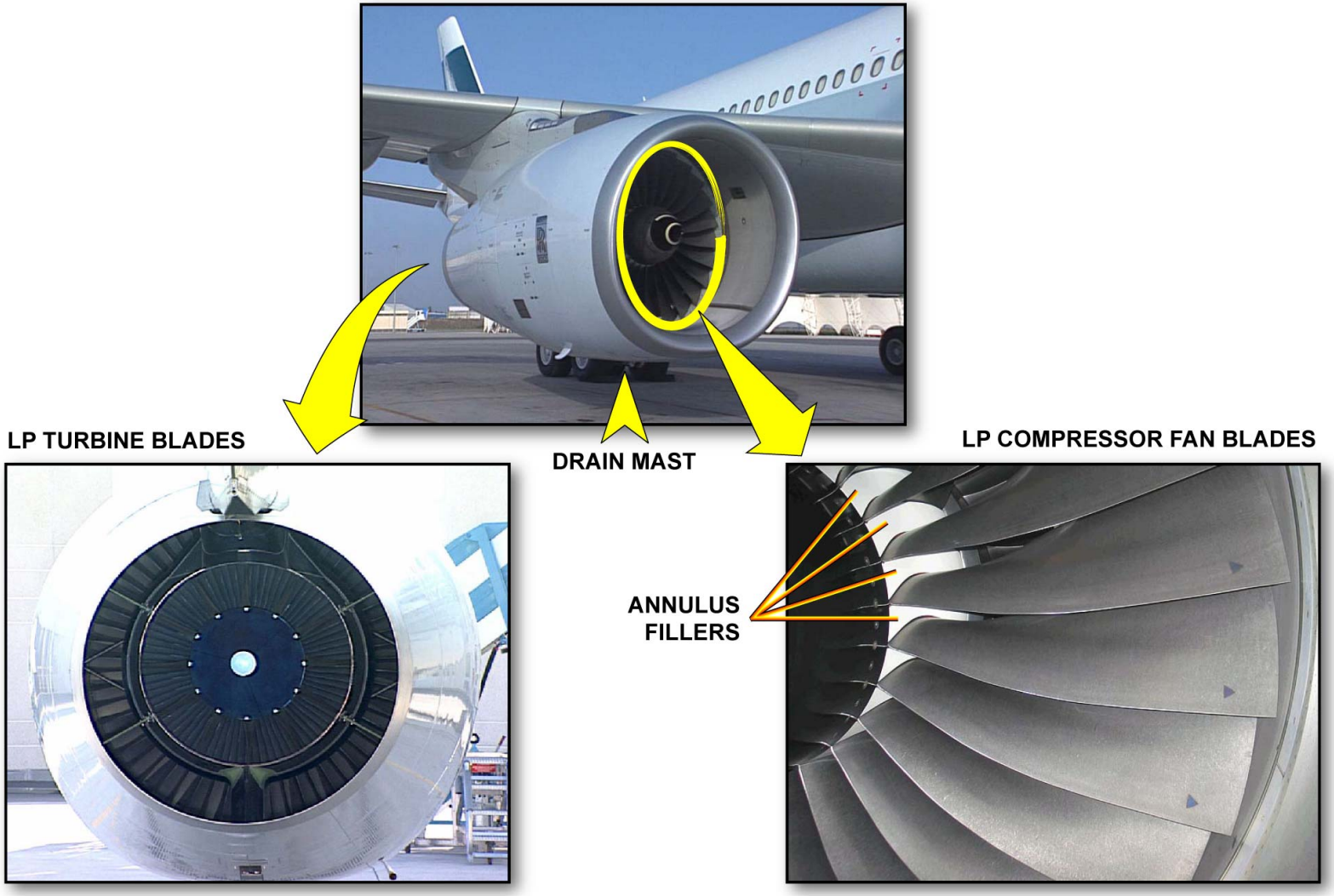

DAILY CHECKS - INLET AND EXHAUST INSPECTION & INSPECT ENGINE DRAINS FOR LEAKS

POWER PLANT LINE MAINTENANCE BRIEFING (2)

MEL/DEACTIVATION

FUEL FILTER CLOG

The aircraft may be dispatched as per the Minimum Equipment List (MEL), with the FUEL CLOG warning inoperative. The conditions for dispatch show that the fuel filter has to be replaced daily or every 15 flight hours (whichever comes first).
The procedure is as follows:
- pull the FADEC Circuit Breakers (C/Bs),
- pull LP and HP fuel shut off valve C/Bs,
- open the right hand side fan cowl door,
- drain the residual fuel from the fuel oil heat exchanger,
- remove the filter cap and filter element,
- discard old element and replace with new,
- install the filter cap and torque to the correct value.

G7508471 - G3NT1T0 - FM70B100000071

LP FUEL FILTER

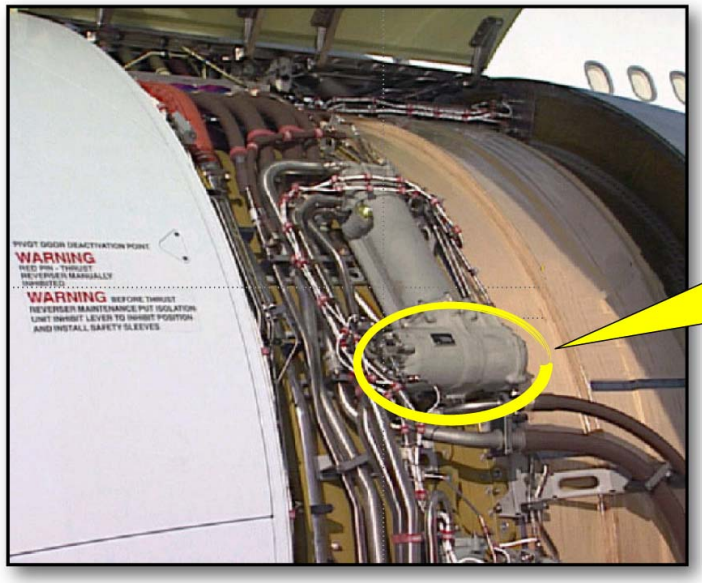

FUEL FILTER

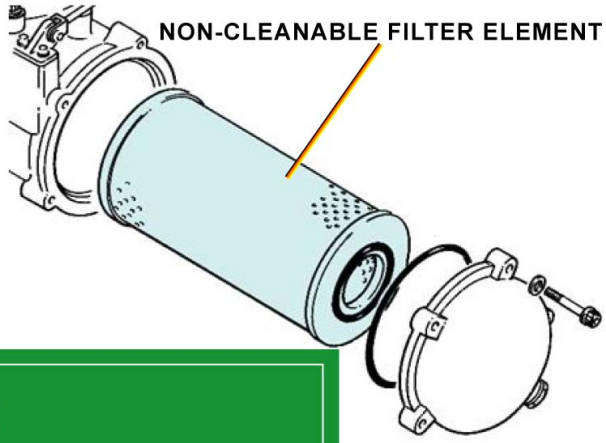

A330	MASTER MINIMUM EQUIPMENT LIST	01-73	P4
MASTER MINIMUM EQUIPMENT LIST	ENGINE FUEL AND CONTROL	SEQ 050	REV 17

1 - SYSTEM AND SEQUENCE NUMBERS		2 - RECTIFICATION INTERVAL	3 - NUMBER INSTALLED	4 - NUMBER REQUIRED FOR DISPATCH	5 - REMARKS OR EXCEPTIONS
ITEM					
30-03	Warning and caution on ECAM E/WD				
A)	ENG 1 (2) FUEL FILTER CLOG	A	2	1	(o) a) One may be displayed on ECAM E/WD for a period of time not exceeding 20 flight hours provided the associated caution was confirmed to be false by troubleshooting.
		C	2	1	(o) (m) b) One may be displayed on ECAM E/WD provided the associated filter is replaced before the first dispatch under present MMEL item and once every 30 flight hours.

AVOID FLUID SPILLAGE
USE APPROPRIATE STORAGE EQUIPMENT FOR CHEMICAL PRODUCTS

MEL/DEACTIVATION - FUEL FILTER CLOG

POWER PLANT LINE MAINTENANCE BRIEFING (2)

MEL/DEACTIVATION (continued)

DEACTIVATE THRUST REVERSER FOR FLIGHT

One or both thrust reversers may be deactivated for dispatch, as per the MEL. The reversers must be deactivated in the stowed and locked position. The procedure is as follows:
- pull FADEC C/Bs,
- pull the T/R Locking C/B (tertiary locks),
- open the fan cowl doors,
- deactivate the thrust reverser ICU,

NOTE: Note: Each pivoting door must be secured to the structure.
- remove the inhibition bolt attachment covers from each pivoting door,
- remove the inhibition bolts from their stowage brackets on the leading edge of the reverser assembly,
- install the inhibition bolts in each pivoting door and secure with the locking plates,
- install the plain covers on the stowage brackets,
- on the ECAM E/WD, make sure that the ENG1 (2) REV INHIBITED message is shown.

The film shows the procedure of the thrust reverser deactivation.

G7508471 - G3NT1T0 - FM70B100000071

1 Deactivate the thrust reverser ICU.

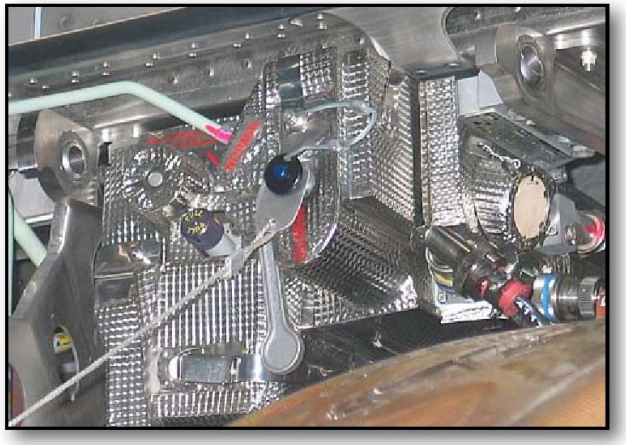

2 Remove the inhibition bolt.

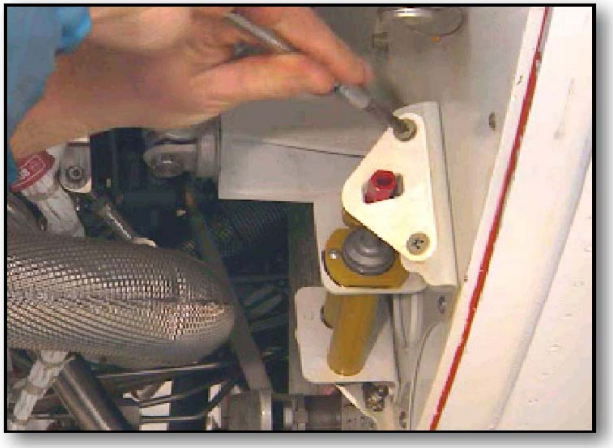

3 Install the inhibition bolt.

MEL/DEACTIVATION - DEACTIVATE THRUST REVERSER FOR FLIGHT

POWER PLANT LINE MAINTENANCE BRIEFING (2)

MEL/DEACTIVATION (continued)

AIR OIL HEATER EXCHANGER MODULATING VALVE

In case of a failure of the Air Oil Heat Exchanger (AOHE) modulating valve, the aircraft may be dispatched, as per the MEL with the valve secured in the open position. This will insure sufficient oil cooling.
The procedure is as follows:
- pull the FADEC C/Bs,
- open the RH fan cowl door,
- make sure that the valve is in the open position and lock it open.

NOTE: Note: Two different types of valves may be installed based on service bulletins.

G7508471 - G3NT1T0 - FM70B100000071

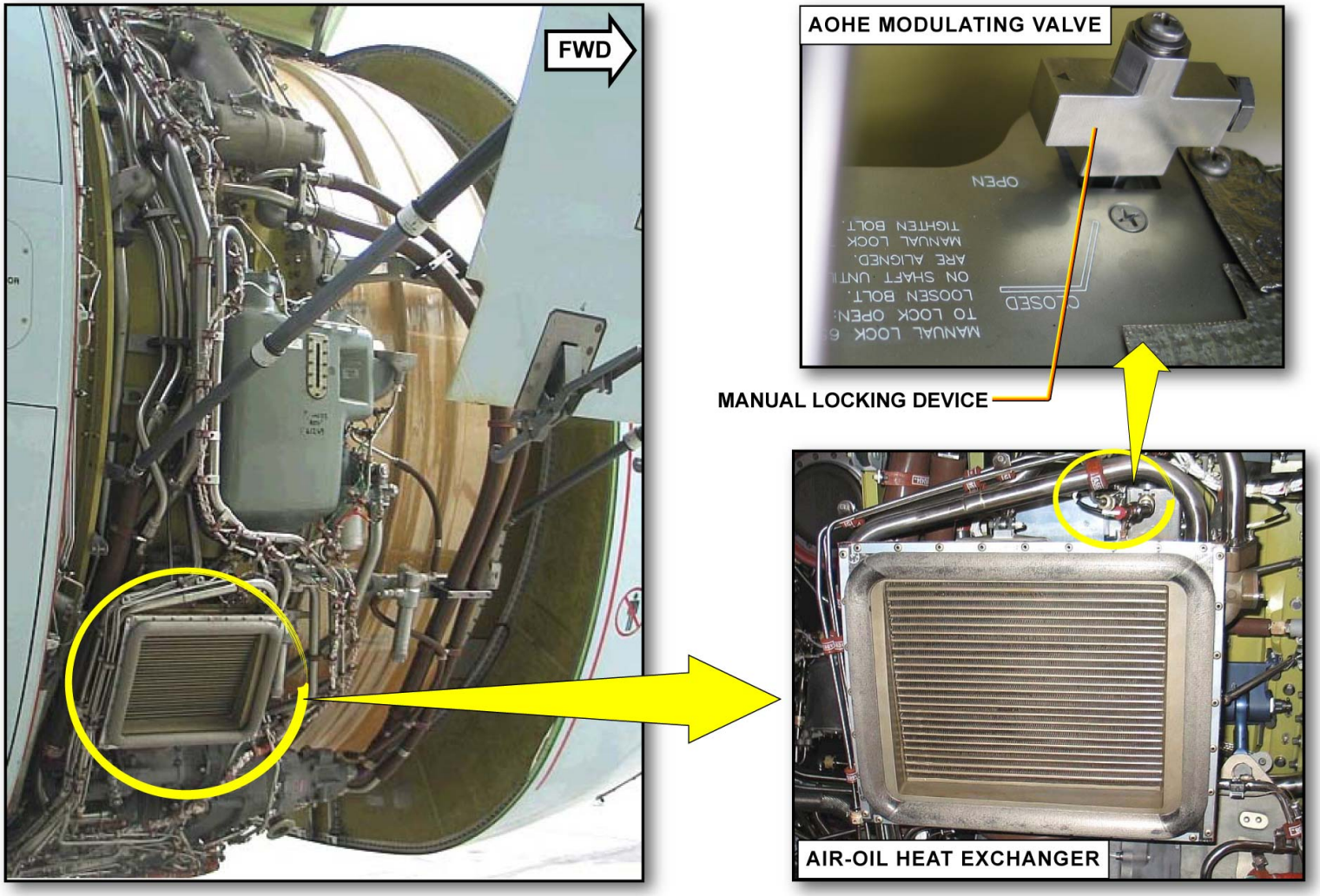

MEL/DEACTIVATION - AIR OIL HEATER EXCHANGER MODULATING VALVE

POWER PLANT LINE MAINTENANCE BRIEFING (2)

MEL/DEACTIVATION (continued)

OIL QUANTITY INDICATION

In case of a failure of the oil quantity indication, the aircraft may be dispatched, as per the MEL as long as the oil LP switch is operational and there is no evidence of abnormal consumption or leakage. Prior to each flight, the oil quantity must also be checked at the oil tank. The procedure is as follows:
- open fan cowl doors,
- open the thrust reverser cowls,
- do a visual check for oil leakage at the oil equipment, lines and connections,

NOTE: Note: If the oil level is low and the engine has been stopped for more than 6 hours, start the engine. Run the engine at idle for 2 minutes. Shut down the engine, wait 10 minutes and check the oil level again.

- check the oil level in the oil tank and service if necessary,
- on the MCDU, read the EIVMU GROUND REPORT and make sure that there are no messages related to the Oil LP switch,
- close the cowls.

G7508471 - G3NT1T0 - FM70B100000071

✓ Inspect engine for oil leaks.

A330 MASTER MINIMUM EQUIPMENT LIST	MASTER MINIMUM EQUIPMENT LIST OIL	01-79	P1
		SEQ 050	REV 19

1 - SYSTEM AND SEQUENCE NUMBERS	ITEM	2 - RECTIFICATION INTERVAL	3 - NUMBER INSTALLED	4 - NUMBER REQUIRED FOR DISPATCH	5 - REMARKS OR EXCEPTIONS
79-31	OIL QUANTITY INDICATING SYSTEM				
31-01	Indication on ECAM ENGINE page				
A) Oil Quantity		C	2	1	(m) One may be inoperative provided: 1) The oil quantity is checked before each flight, and 2) There is no evidence of abnormal oil consumption or leakage.

MEL/DEACTIVATION - OIL QUANTITY INDICATION

G7508471 - G3NT1T0 - FM70B100000071

POWER PLANT LINE MAINTENANCE BRIEFING (2)

MEL/DEACTIVATION (continued)

OIL FILTER CLOG

In case of a failure of the OIL CLOG warning on the ECAM, the aircraft may be dispatched as per the MEL. There are two conditions for dispatch. First, the oil filter must be changed daily (or every 15 FH - whichever comes first). In addition, the Master Chip Detector (MCD) must be inspected for contamination prior to each flight.
The procedure for the replacement of the oil scavenge filter is as follows:
- open the RH fan cowl door,
- drain the residual oil from the filter housing,
- remove the filter housing,
- remove the filter element from the housing,
- discard element and replace with new.

The procedure for MCD inspection is as follows:
- open MCD access door on the RH fan cowl,
- remove the MCD and inspect the probe for contamination,

NOTE: Note: Refer to the AMM (ATA 79) for types and limits of contamination.

- clean the MCD probe, replace seals and reinstall.

NOTE: Note: Refer to the AMM procedure for correct torque values.

G7508471 - G3NT1T0 - FM70B100000071

Replace oil filter elements

A330 MASTER MINIMUM EQUIPMENT LIST	MASTER MINIMUM EQUIPMENT LIST OIL	01-79	P3
		SEQ 001	REV 13

1 - SYSTEM AND SEQUENCE NUMBERS	2 - RECTIFICATION INTERVAL	3 - NUMBER INSTALLED	4 - NUMBER REQUIRED FOR DISPATCH	5 - REMARKS OR EXCEPTIONS
ITEM				
35-02 Warning and caution on ECAM E/WD				
A) ENG 1 (2) OIL FILTER CLOG	C	2	1	(m) One may be inoperative provided: 1) The associated filter is changed daily or every 15 flight hours whichever occurs first, and 2) The associated master chip detector is inspected before each flight and does not reveal the presence of chips from the engine bearings

MEL/DEACTIVATION - OIL FILTER CLOG

G7508471 - G3NT1T0 - FM70B100000071

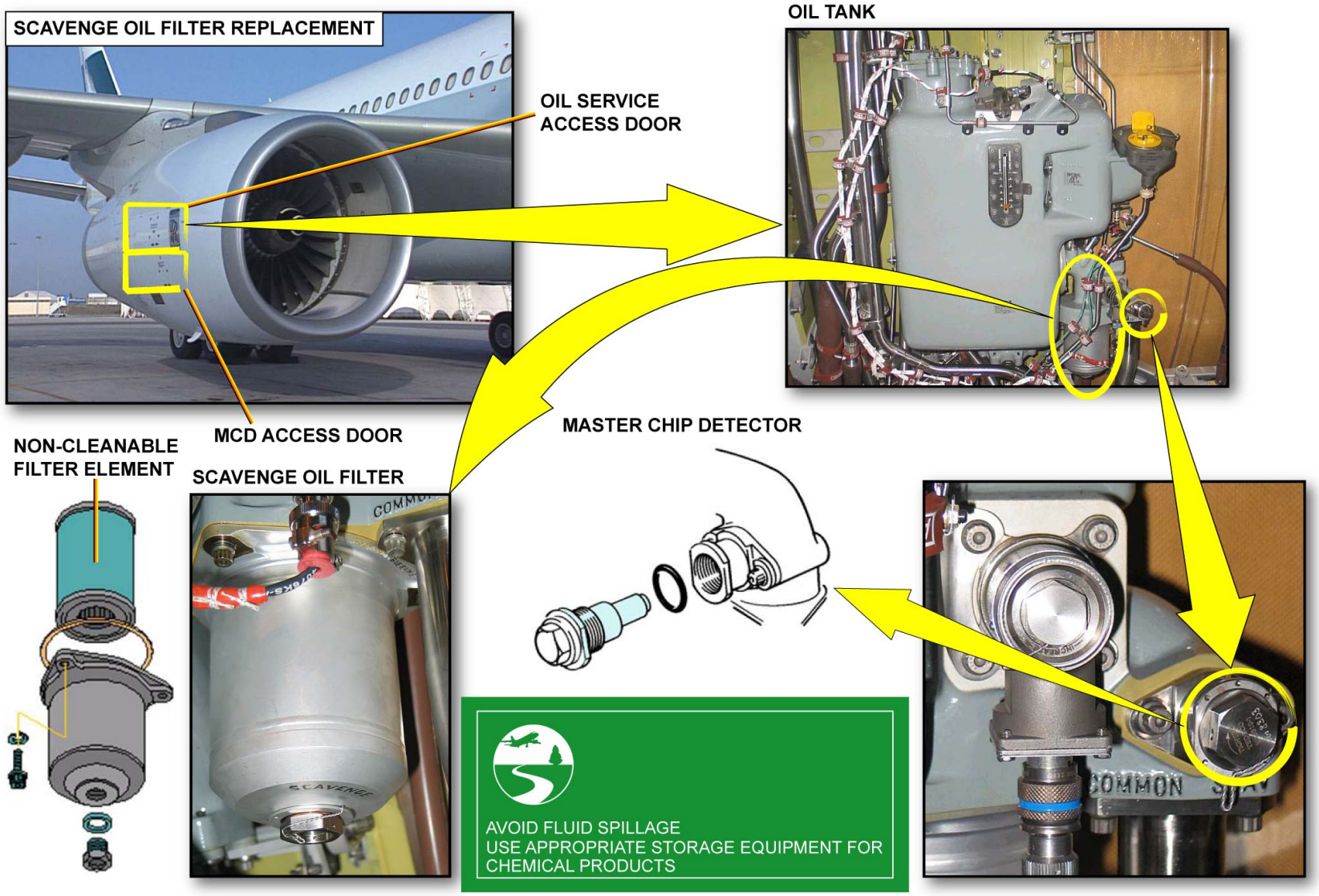

MEL/DEACTIVATION - OIL FILTER CLOG

PRESSURE FILTER

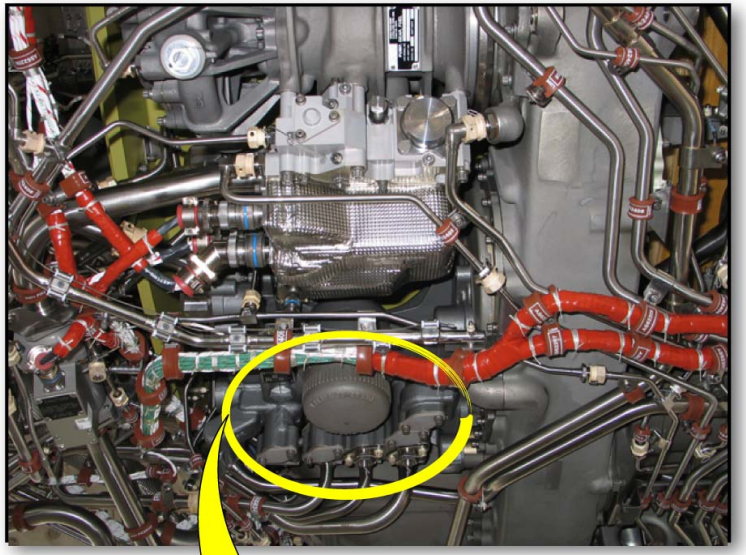

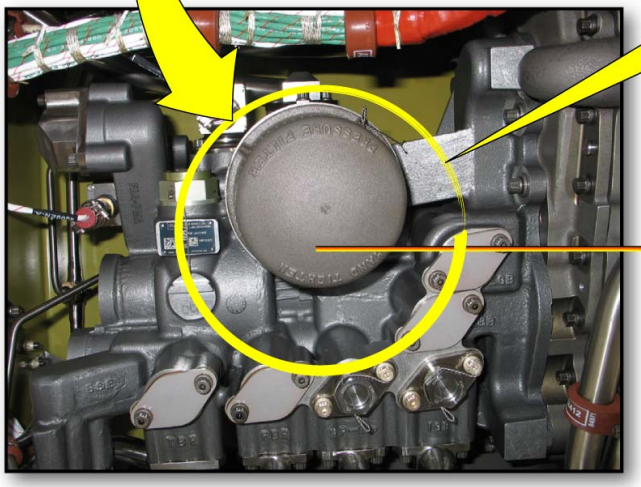

Pressure oil filter replacement

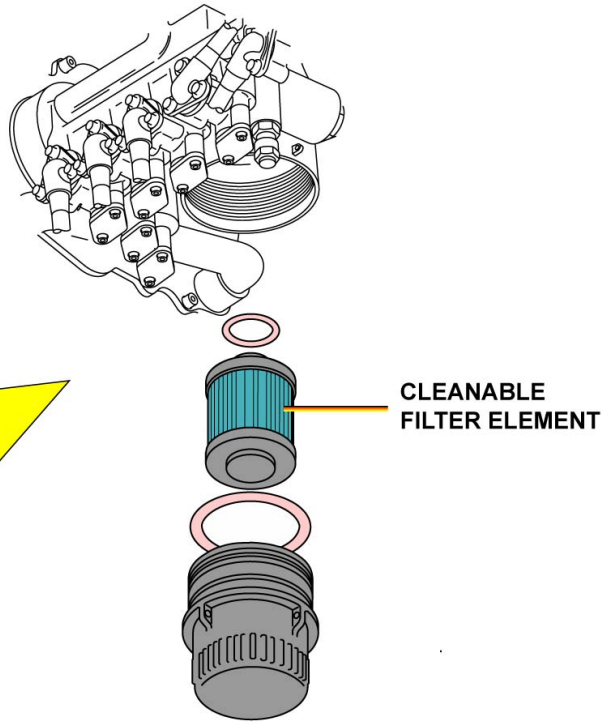

AVOID FLUID SPILLAGE
USE APPROPRIATE STORAGE EQUIPMENT FOR CHEMICAL PRODUCTS

MEL/DEACTIVATION - OIL FILTER CLOG

POWER PLANT LINE MAINTENANCE BRIEFING (2)

MEL/DEACTIVATION (continued)

START VALVE

In case of a start valve failure, as per the MEL, the aircraft may be dispatched and the engines started by manual operation of the start valve. During this operation, it is important for maintenance personnel to follow the "valve open" and "valve close" commands from the cockpit.

WARNING: During manual start valve operation, respect the inlet and exhaust danger areas. Engine inlet suction is sufficient to pull you into the engine.

The procedure is as follows:
- open the Starter Control Valve and Thrust Reverser Ground Safety Switch access door on the LH fan cowl,
- insert 3/8" square drive in the start control valve manual drive,
- on flight deck command, turn the manual drive counter-clockwise to OPEN the valve,
- on flight deck command, turn the manual drive clockwise to CLOSE the valve,
- after closing the access panel, exit the area using the entry corridor.

G7508471 - G3NT1T0 - FM70B100000071

START VALVE

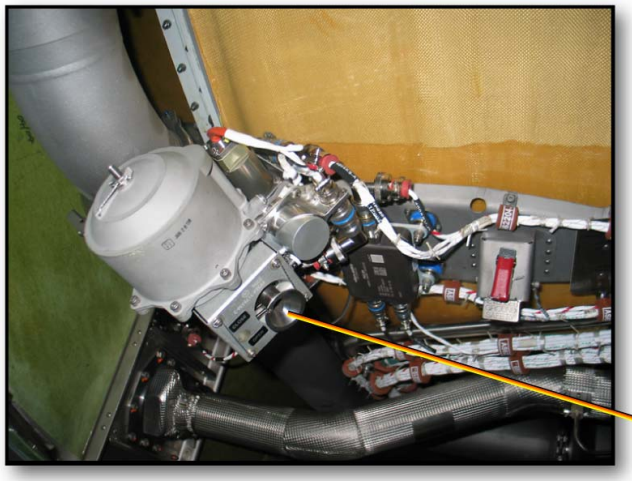

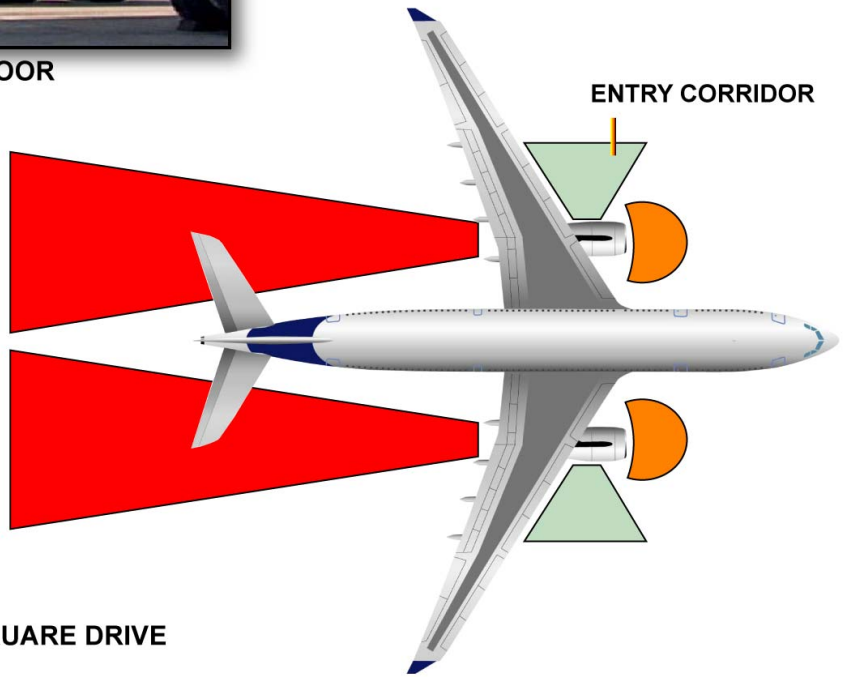

MEL/DEACTIVATION - START VALVE

G7508471 - G3NT1T0 - FM70B100000071

POWER PLANT LINE MAINTENANCE BRIEFING (2)

ENVIRONMENTAL PRECAUTIONS

Do not discharge products such as oil, fuel, solvent, lubricant either in trash bins, soil or into the water network (drains, gutters, rain water, waste water, etc...).
Sort waste fluids and use specific waste disposal containers.
Each product must be stored in an appropriate and specific cabinet or room such as a fire-resistant and sealed cupboard.

G7508471 - G3NT1T0 - FM70B100000071

STORE PRODUCTS IN APPROPRIATE CONTAINER/CUPBOARD/ROOM

SORT WASTE FLUIDS IN CONTAINERS

AVOID FLUID SPILLAGE
USE APPROPRIATE STORAGE EQUIPMENT FOR CHEMICAL PRODUCTS

FLUID SPILL CLEANUP KIT

USE SPECIFIC WASTE DISPOSAL CONTAINERS

ENVIRONMENTAL PRECAUTIONS

POWER PLANT INSTALLATION D/O (3)

BOOTSTRAP SYSTEM INSTALLATION

The removal and installation of the engine requires the installation of a bootstrap system on the aircraft pylon. The bootstrap system is composed of two elements, to be installed at the front and at the rear of the pylon. Each element is used to attach at its ends the chain pulley blocks assembly and dynamometers that are used to lower or to lift the transportation stand attached to the engine.

G7508471 - G3NT1T0 - FM70D900000071

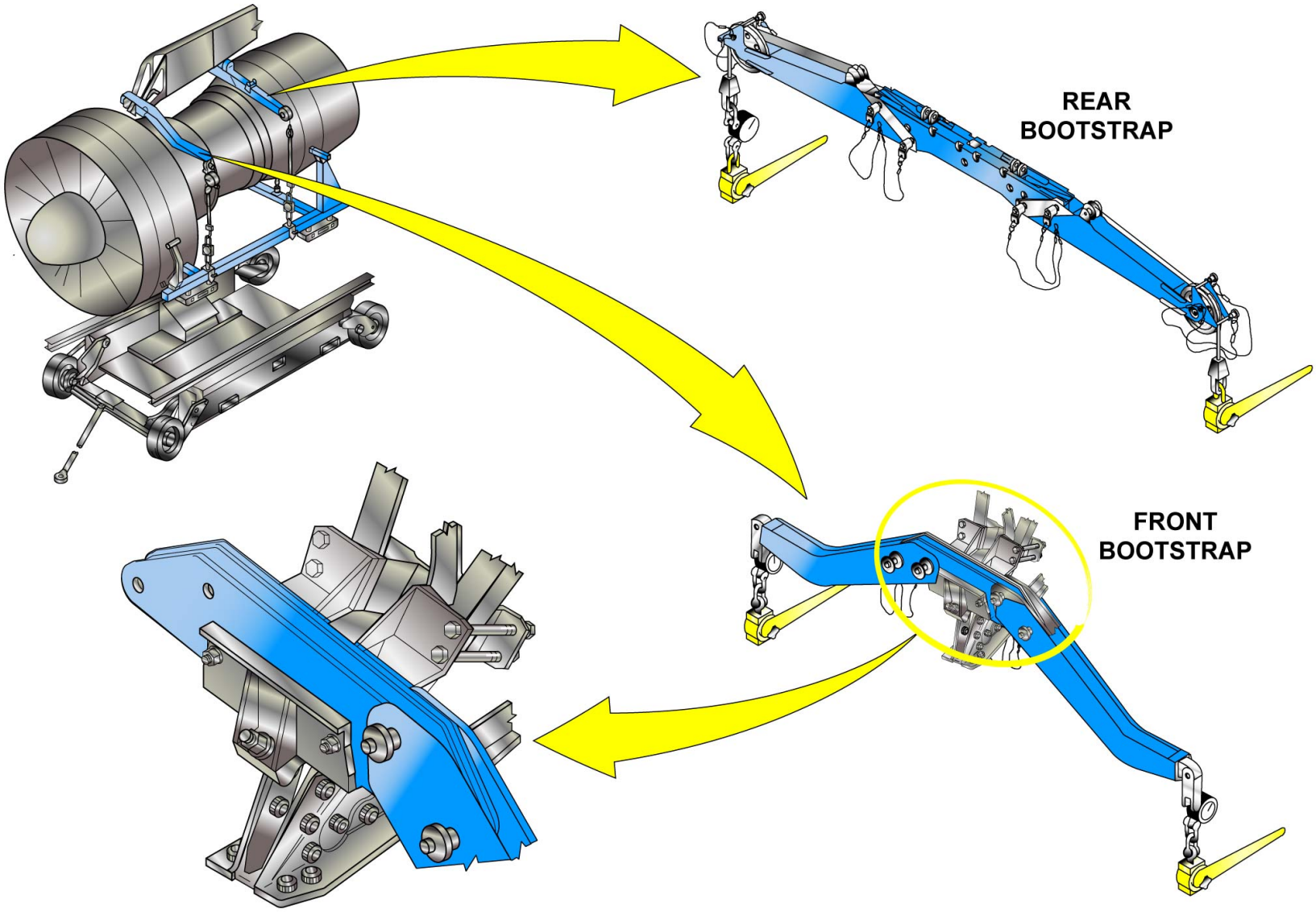

BOOTSTRAP SYSTEM INSTALLATION

G7508471 - G3NT1T0 - FM70D900000071

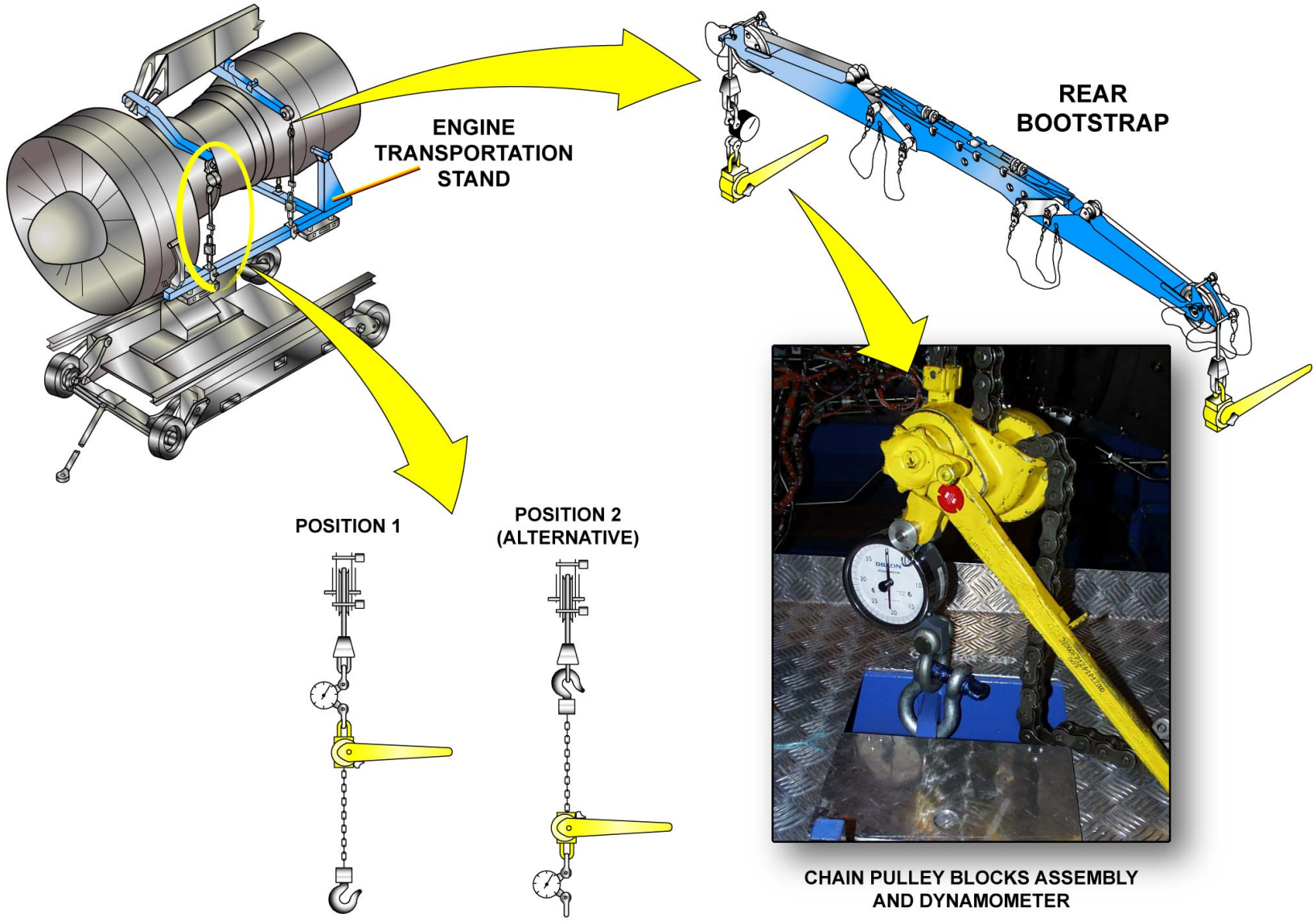

BOOTSTRAP SYSTEM INSTALLATION

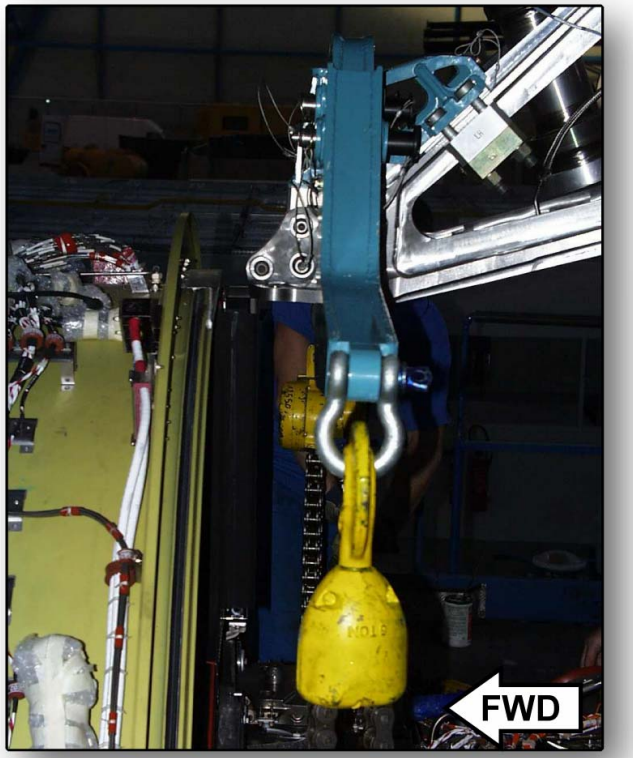

FRONT BOOTSTRAP

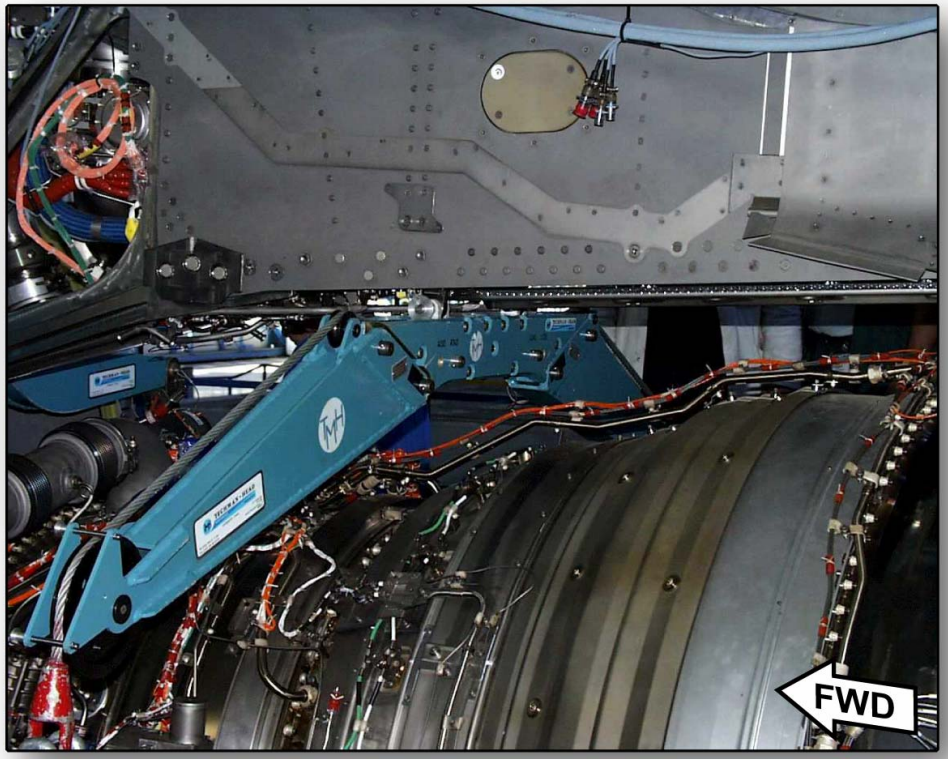

REAR BOOTSTRAP

BOOTSTRAP SYSTEM INSTALLATION

G7508471 - G3NT1T0 - FM70D900000071

POWER PLANT INSTALLATION D/O (3)

ENGINE TRANSPORTATION STAND ATTACHMENT POINTS

The engine transportation stand, which is used for engine removal and installation, can be attached to the engine by four trunnions:
- two front trunnions attached onto the intermediate case, on the LH side and RH sides,
- two rear trunnions attached onto the tail bearing housing, on the LH side and RH sides.

G7508471 - G3NT1T0 - FM70D900000071

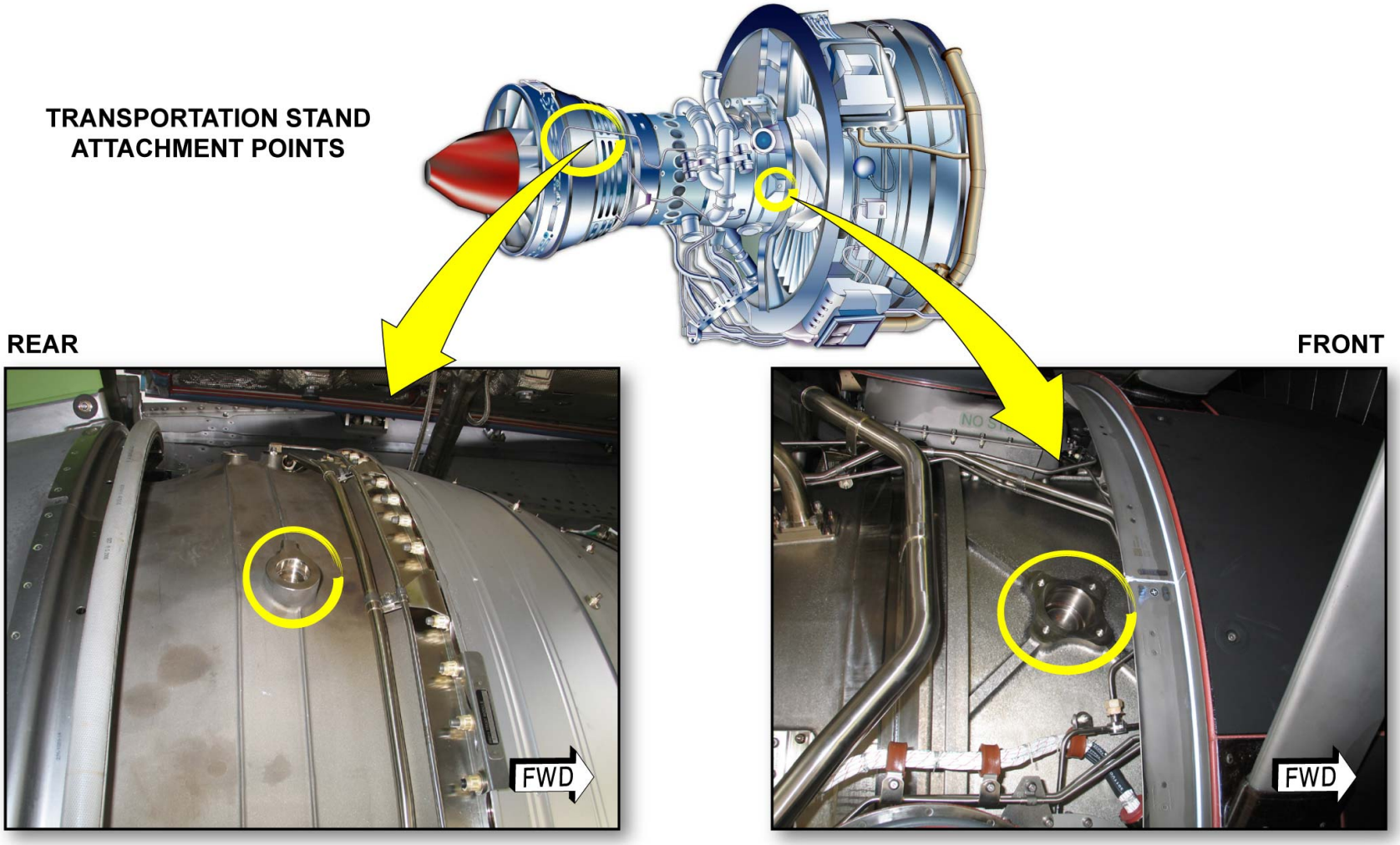

ENGINE TRANSPORTATION STAND ATTACHMENT POINTS

G7508471 - G3NT1T0 - FM70D900000071

POWER PLANT INSTALLATION D/O (3)

ENGINE MOUNTS

The engine is attached to the aircraft pylon by two mounts, which support the weight of the engine and transmit thrust loads to the aircraft structure.
The engine front mount is installed on the top of the engine intermediate case and is attached to the aircraft pylon by four tension bolts. The front mount is designed with a failsafe feature and transmits vertical, side and thrust loads to the aircraft pylon.
The engine rear mount is installed on top of the turbine exhaust case and is attached to the aircraft pylon by four tension bolts. This mount is also designed with a failsafe feature, and transmits vertical, side and torsion loads to the aircraft pylon.

G7508471 - G3NT1T0 - FM70D900000071

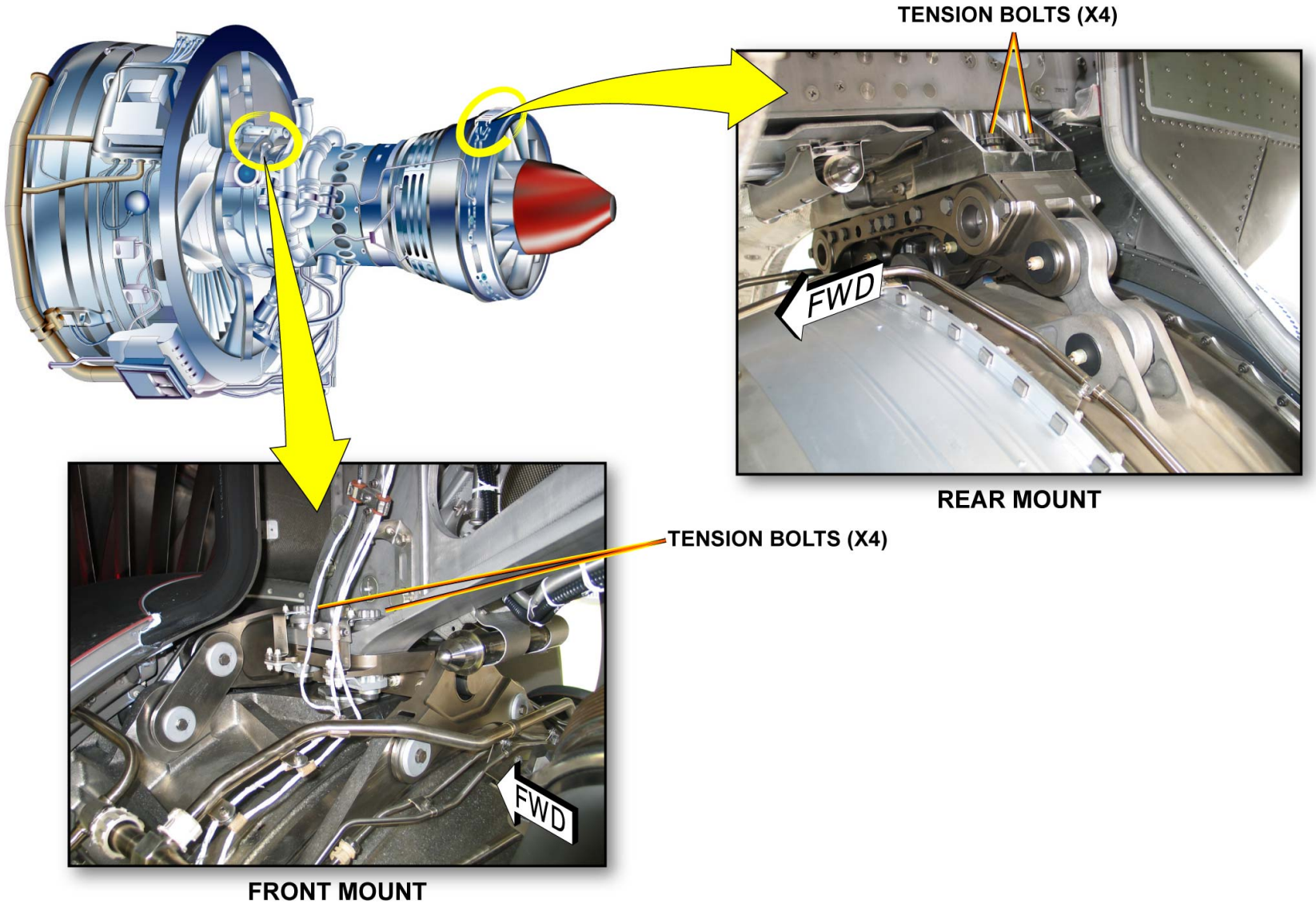

ENGINE MOUNTS

POWER PLANT INSTALLATION D/O (3)

FLUID CONNECTIONS

The fluid connections between engine and aircraft pylon are located on the RH side of the fan case. The fluid connection line for the fuel system is the LP fuel supply line. The fluid connection lines for the hydraulic system are:
- the hydraulic pressure line and suction line of the green system,
- the hydraulic pressure line and suction line of the blue or yellow system,
- the hydraulic case drain of the green system,
- the hydraulic case drain of the blue or yellow system .

G7508471 - G3NT1T0 - FM70D900000071

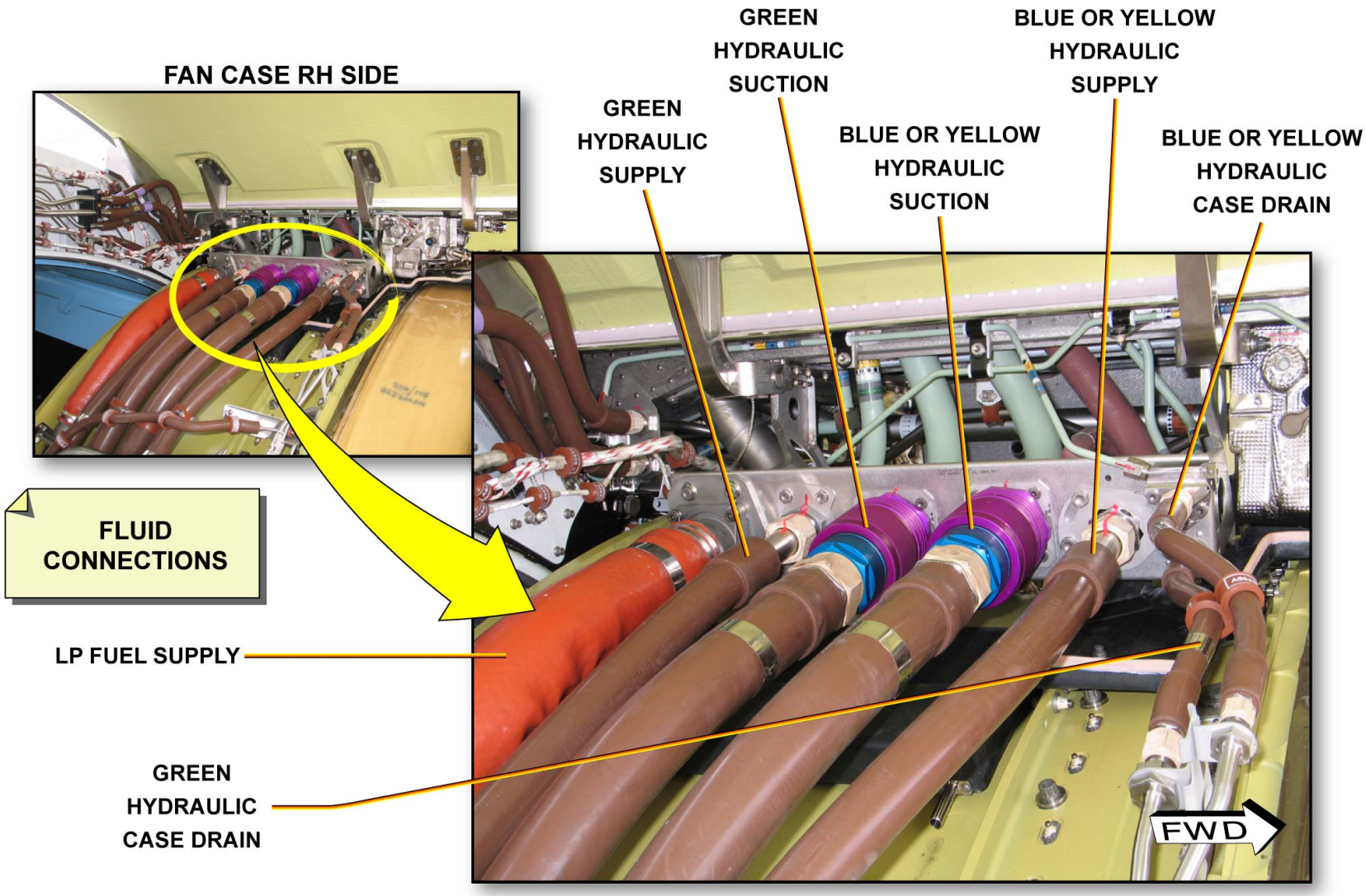

FLUID CONNECTIONS

G7508471 - G3NT1T0 - FM70D900000071

POWER PLANT INSTALLATION D/O (3)

THRUST REVERSER ISOLATION CONTROL UNIT (ICU) ELECTRICAL CONNECTION

The Isolation Control Unit (ICU) of the Thrust Reverser system receives two electrical connectors for its control and monitoring.

G7508471 - G3NT1T0 - FM70D900000071

FAN CASE RH SIDE

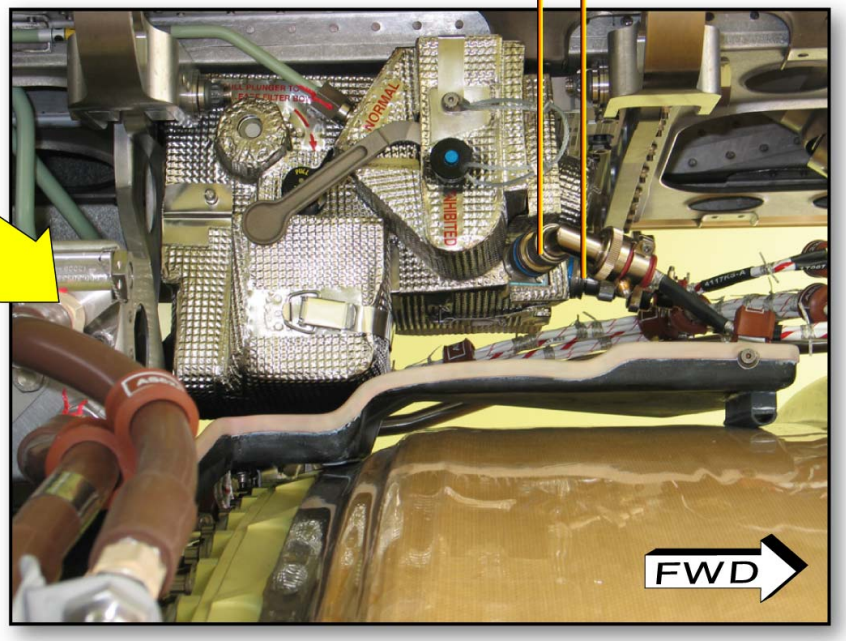

ISOLATION CONTROL UNIT (ICU)

THRUST REVERSER ISOLATION CONTROL UNIT (ICU) ELECTRICAL CONNECTION

POWER PLANT INSTALLATION D/O (3)

FAN ELECTRICAL INTERFACE PANEL

The fan electrical interface panel is used for the connections between the fan electrical harnesses and the pylon. It is installed on the LH side of the fan case upper part.

G7508471 - G3NT1T0 - FM70D900000071

FAN CASE LH SIDE

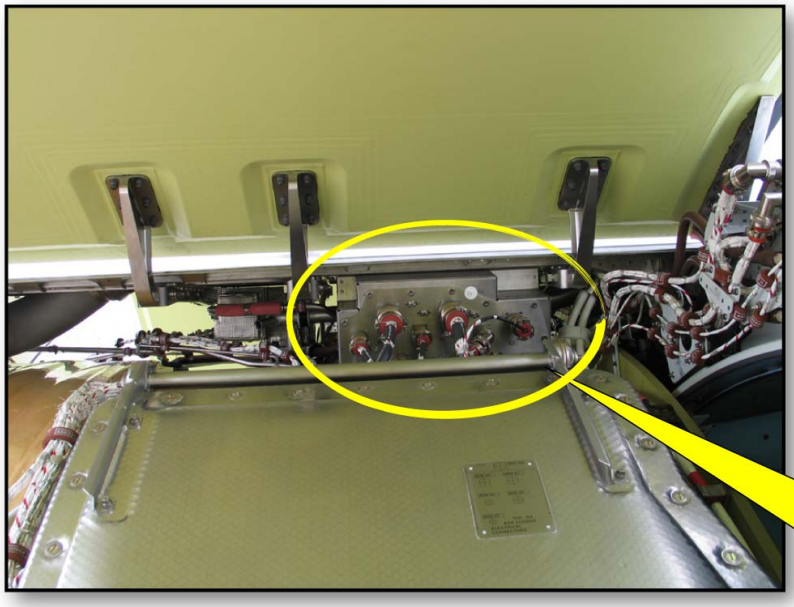

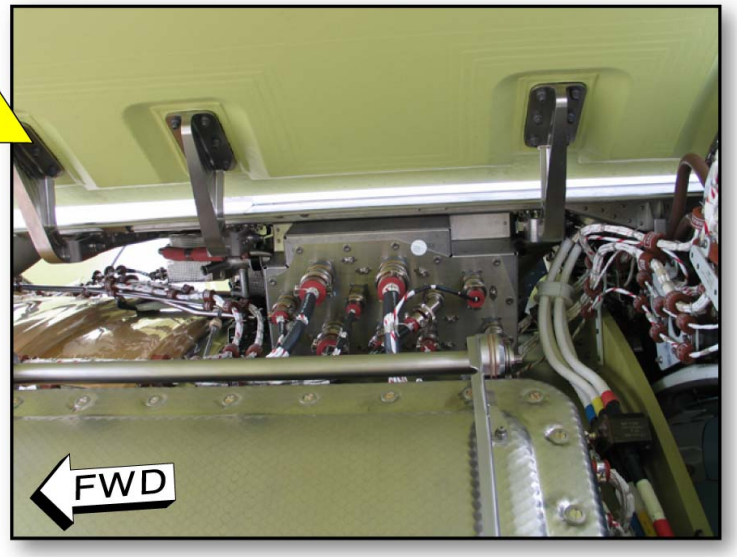

FAN ELECTRICAL INTERFACE PANEL

FAN ELECTRICAL INTERFACE PANEL

G7508471 - G3NT1T0 - FM70D900000071

POWER PLANT INSTALLATION D/O (3)

CORE ELECTRICAL INTERFACE PANEL

The core electrical interface panel is used for the connections between the core electrical harnesses and the pylon. It is installed near to the engine front mount.

G7508471 - G3NT1T0 - FM70D900000071

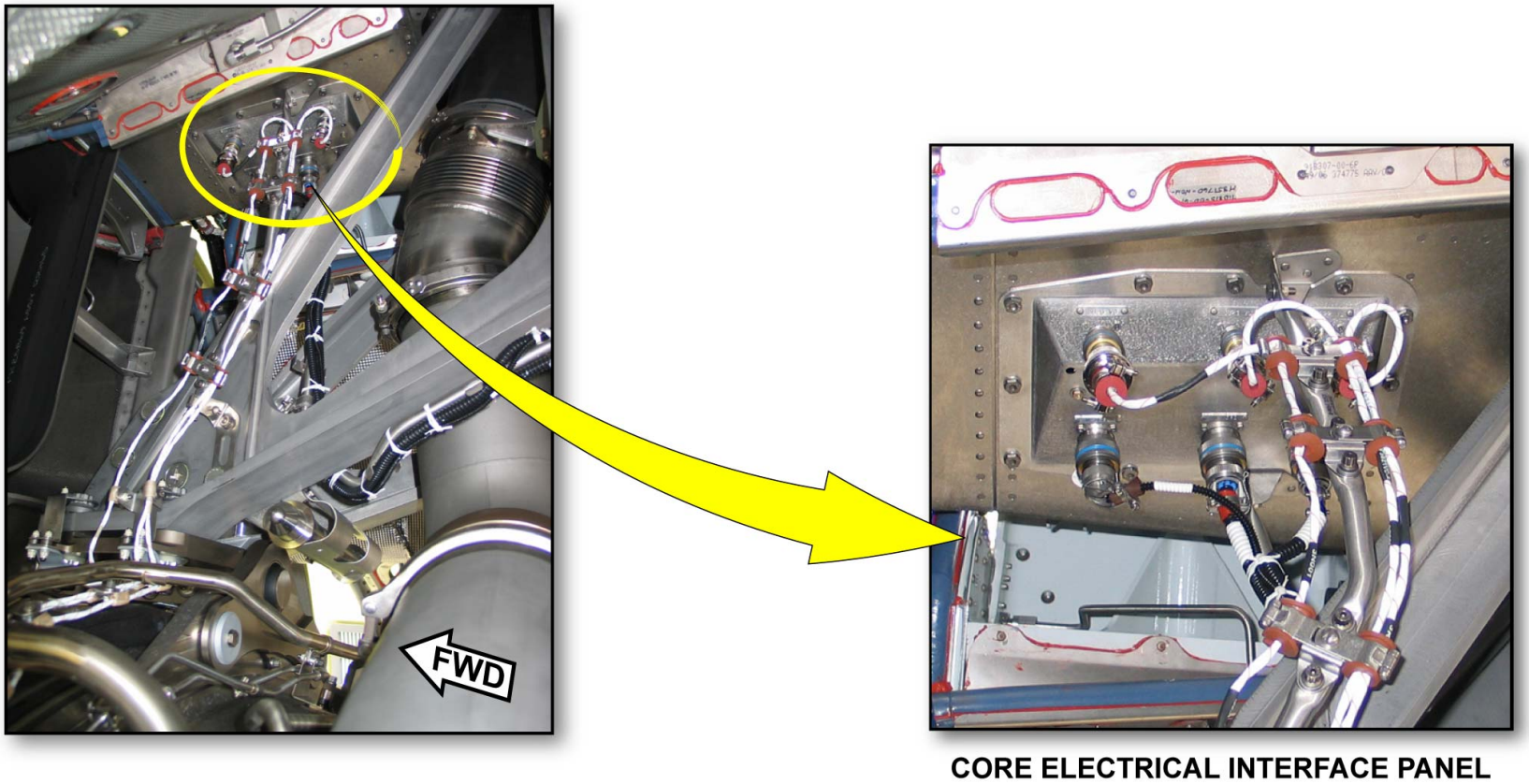

CORE ELECTRICAL INTERFACE PANEL

G7508471 - G3NT1T0 - FM70D900000071

POWER PLANT INSTALLATION D/O (3)

IDG POWER CABLES TERMINAL BLOCK

The IDG power cables are routed vertically at the rear of the LH fan case. They are connected to the aircraft cables through a terminal block located near the fan electrical interface panel.

G7508471 - G3NT1T0 - FM70D900000071

FAN CASE LH SIDE

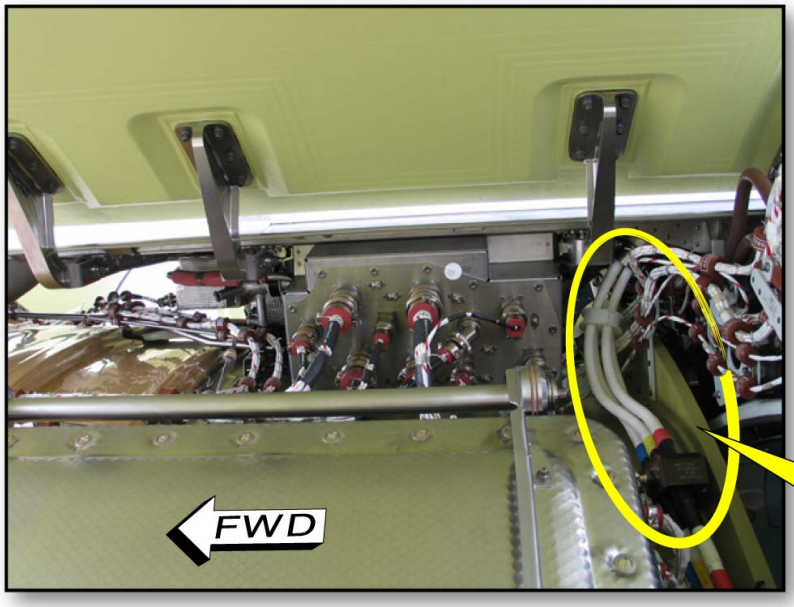

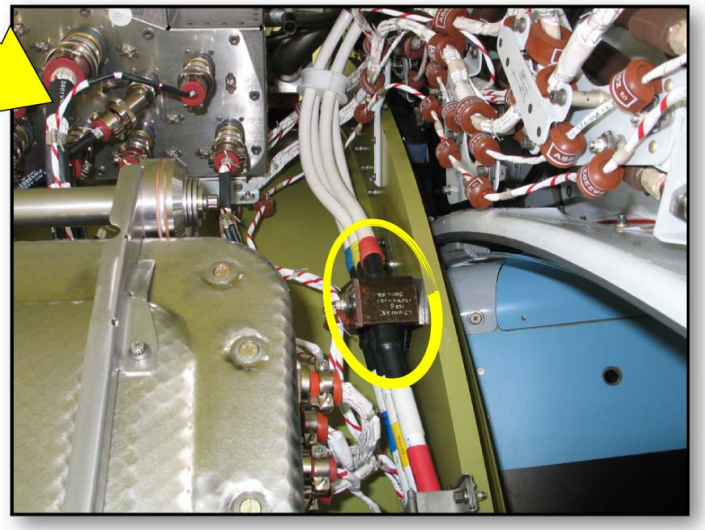

IDG POWER CABLES TERMINAL BLOCK

IDG POWER CABLES TERMINAL BLOCK

G7508471 - G3NT1T0 - FM70D900000071

POWER PLANT INSTALLATION D/O (3)

EEC PROTECTION BOX ELECTRICAL CONNECTIONS

The Engine Electronic Controller (EEC) protection box receives electrical connectors at the top RH corner to get the electrical connections to the EEC, the Overspeed Protection Unit (OPU) and the Power Control Unit (PCU).

G7508471 - G3NT1T0 - FM70D900000071

FAN CASE LH SIDE

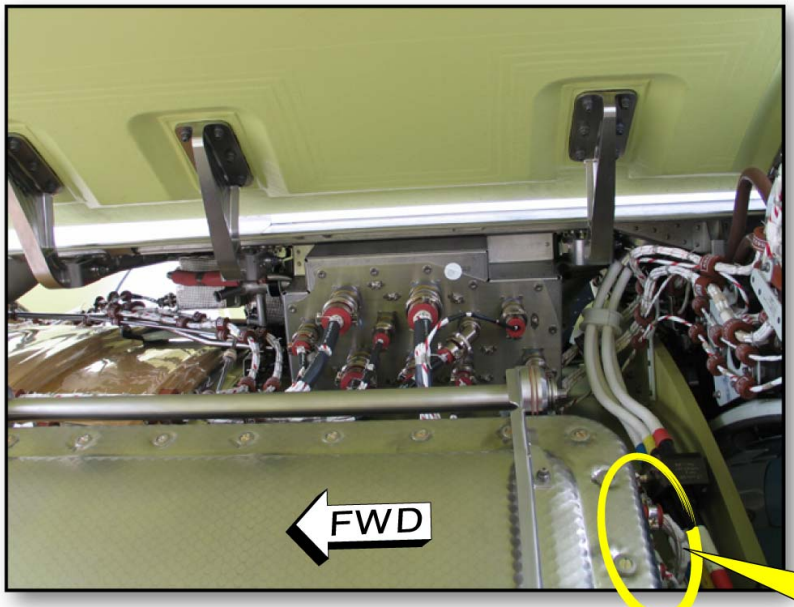

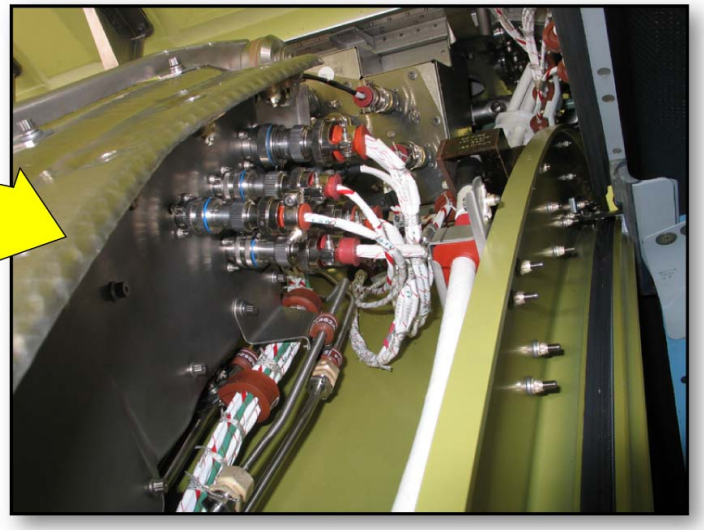

EEC PROTECTION BOX ELECTRICAL CONNECTIONS

EEC PROTECTION BOX ELECTRICAL CONNECTIONS

POWER PLANT INSTALLATION D/O (3)

PNEUMATIC DUCTS CONNECTION

The starter air duct is installed at the front of the LH fan case. It is connected to the pylon through an interface duct attached by two clamps. The connection of the engine bleed air system to the aircraft pneumatic system is done on the LH side of engine core through an interface duct attached by 2 clamps.

G7508471 - G3NT1T0 - FM70D900000071

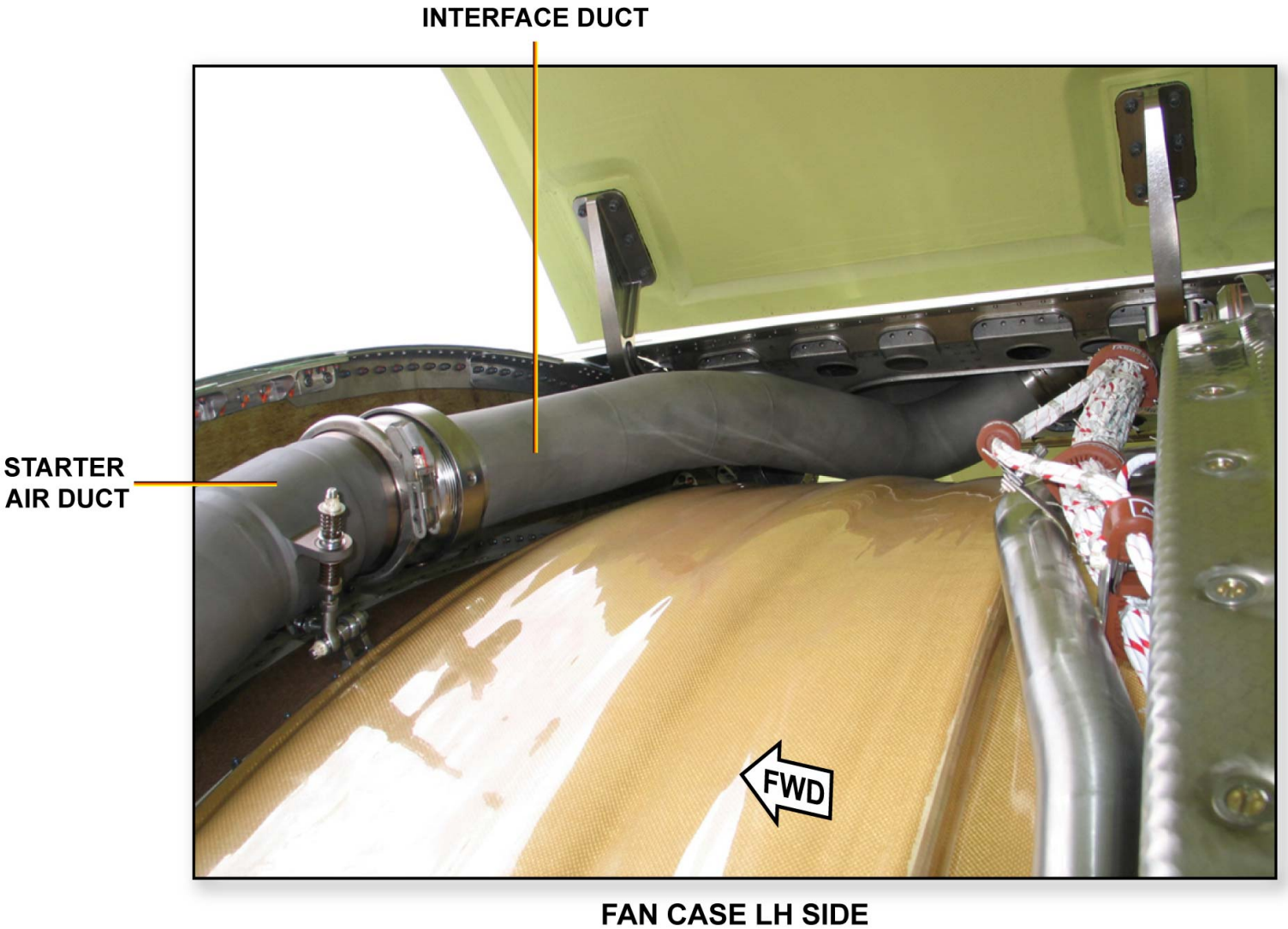

PNEUMATIC DUCTS CONNECTION

G7508471 - G3NT1T0 - FM70D900000071

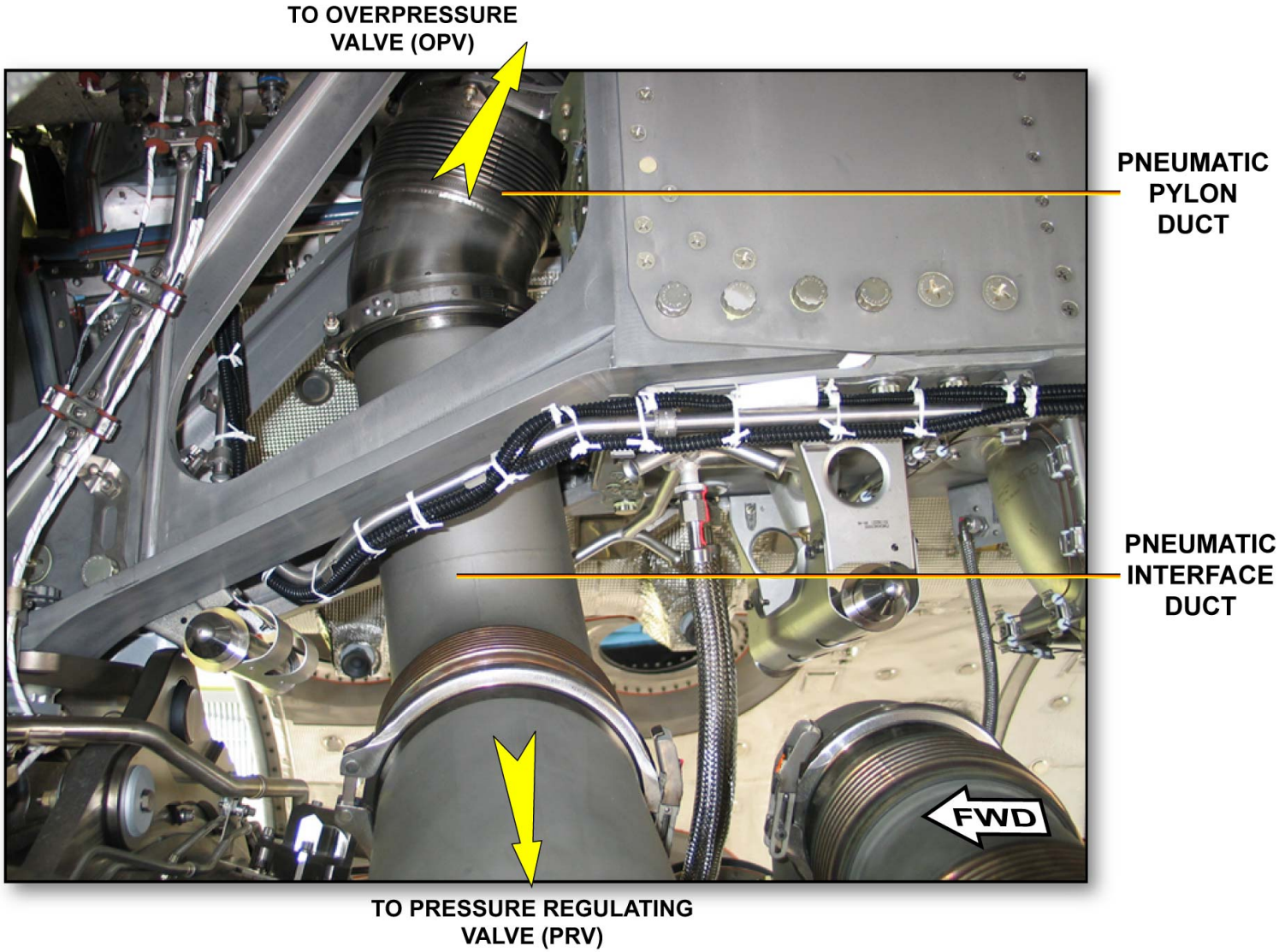

PNEUMATIC DUCTS CONNECTION

G7508471 - G3NT1T0 - FM70D900000071

This Page Intentionally Left Blank

G7508471 - G3NT1T0 - FM70D900000071

POWER PLANT INSTALLATION D/O (3)

SYSTEM PYLON INTERFACES

The following system connections are connected with the engine to the pylon interface, on the RH side:
- core zone fire extinguishing line,
- hydraulic reservoir pressurization air tube (engine 1 only),
- sense line connecting Pressure Regulating Valve (PRV) to Thermostat Solenoid (THS) of engine bleed air system.

The sense lines connecting to the bleed Regulated Pressure (Pr) transducer and the Transferred Pressure (Pt) transducer interface with the pylon on the LH side.

G7508471 - G3NT1T0 - FM70D900000071

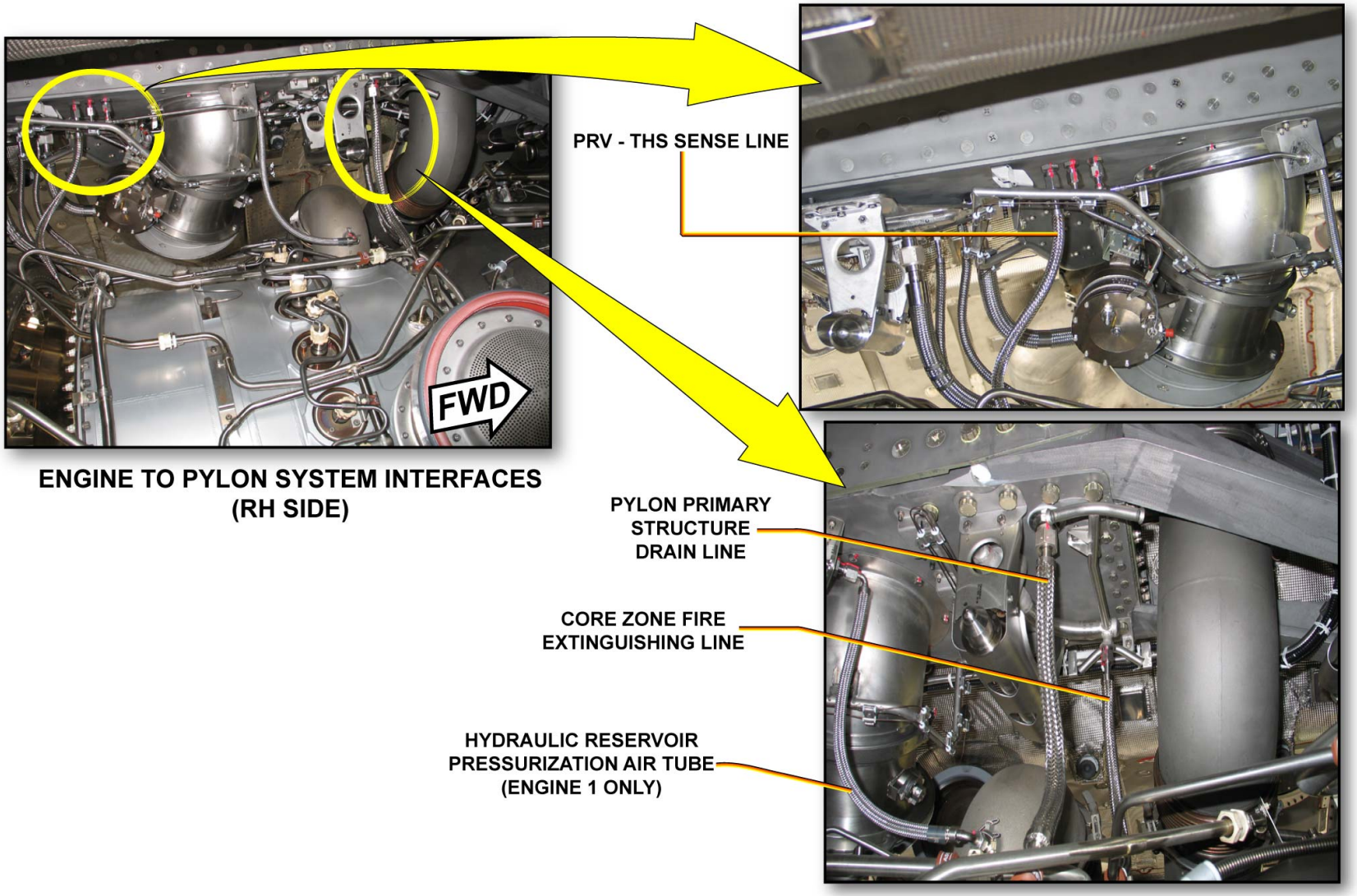

SYSTEM PYLON INTERFACES

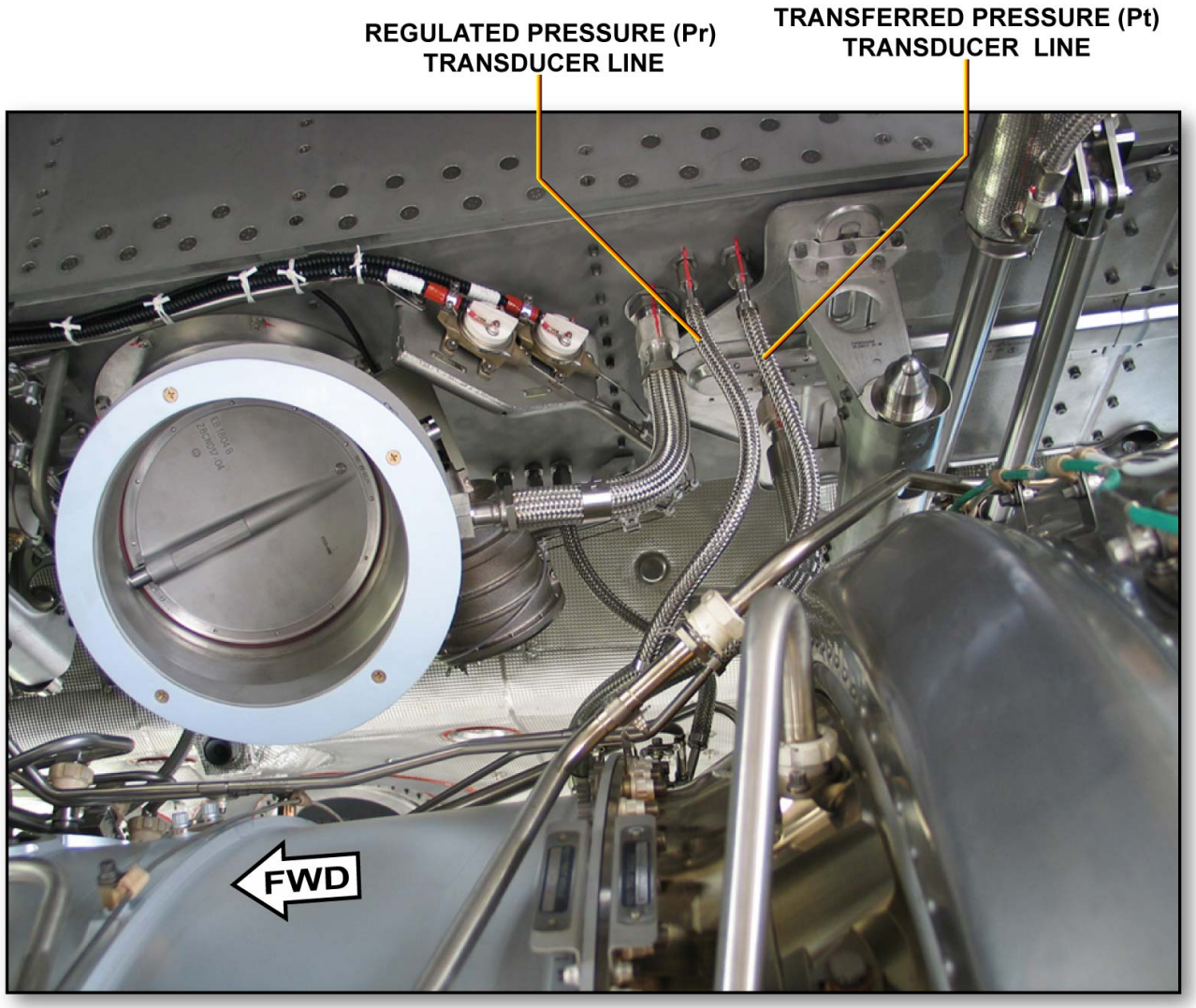

ENGINE TO PYLON SYSTEM INTERFACES (LH SIDE)

SYSTEM PYLON INTERFACES

G7508471 - G3NT1T0 - FM70D900000071

This Page Intentionally Left Blank

G7508471 - G3NT1T0 - FM70D900000071

NACELLE D/O (3)

INLET COWL

The inlet cowl is attached to the forward flange of the LP compressor case (fan case) and is de-iced.
The air inlet cowl assembly is composed of:
- an inner and outer barrel,
- a rear bulkhead and,
- an intake cowl leading edge (lip) assembly which contains the forward bulkhead.

The assembly also has:
- a thermal anti ice air outlet,
- a P20/T20 probe and access panel,
- a zone 1 cooling air inlet,
- a maintenance interphone jack,
- electronic unit protection box cooling ducts,
- and four hoisting points.

G7508471 - G3NT1T0 - FM70D800000071

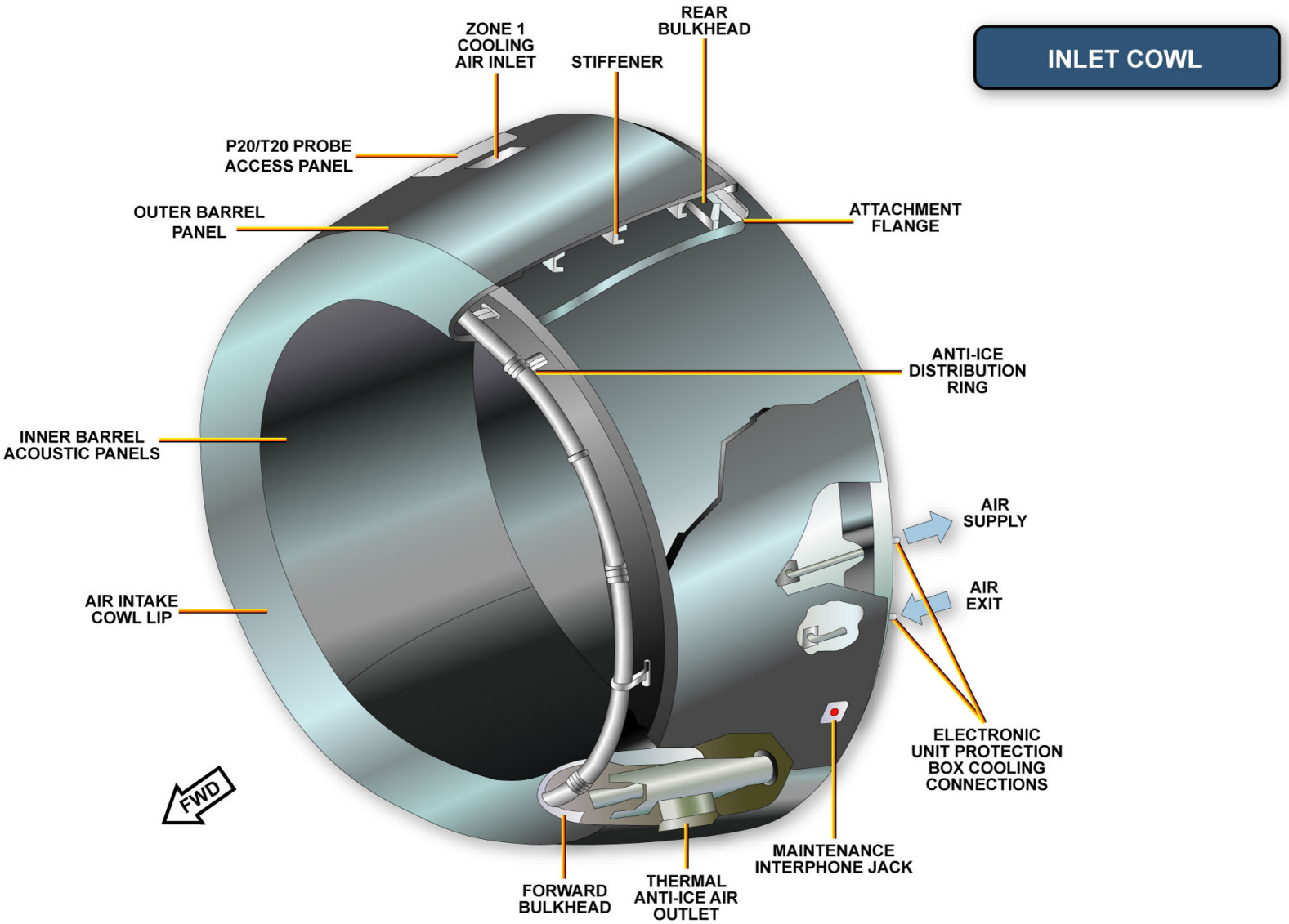

INLET COWL

G7508471 - G3NT1T0 - FM70D800000071

NACELLE D/O (3)

FAN COWL DOORS

The fan cowls are attached by four hinges and secured together by four latches at the bottom to close around the LP compressor case. Two deflection restraints make sure that the front lower corners cannot droop below the nose cowl line. They can be opened during ground maintenance to give access to the components installed on the case and on the gearbox, and let the thrust reverser halves (C-Duct) be opened.
Each fan cowl door is maintained open by means of two telescopic hold open rods.
There are two hold open positions, 55 degrees and 44 degrees. The 55 degrees maximum open position gives the access to the pylon interfaces and upper accessories. The 44 degrees position gives access to other features.
Each fan cowl door has various access doors and outlets.

LEFT FAN COWL

The left fan cowl has:
- the starter control valve, thrust reverser ground safety switch and anti ice valve access door,
- the Integrated Drive Generator (IDG) oil fill-sight glass and reset lever access door,
- and the IDG oil cooler air outlet.

RIGHT FAN COWL

The right fan cowl has:
- the oil fill sight-glass access door,
- a hydraulic filter contamination indicator and master Magnetic Chip Detector (MCD) access door,
- the Air Oil Heat Exchanger (AOHE) air outlet,
- the zone 1 airflow outlet,
- and the breather outlet mast.

G7508471 - G3NT1T0 - FM70D800000071

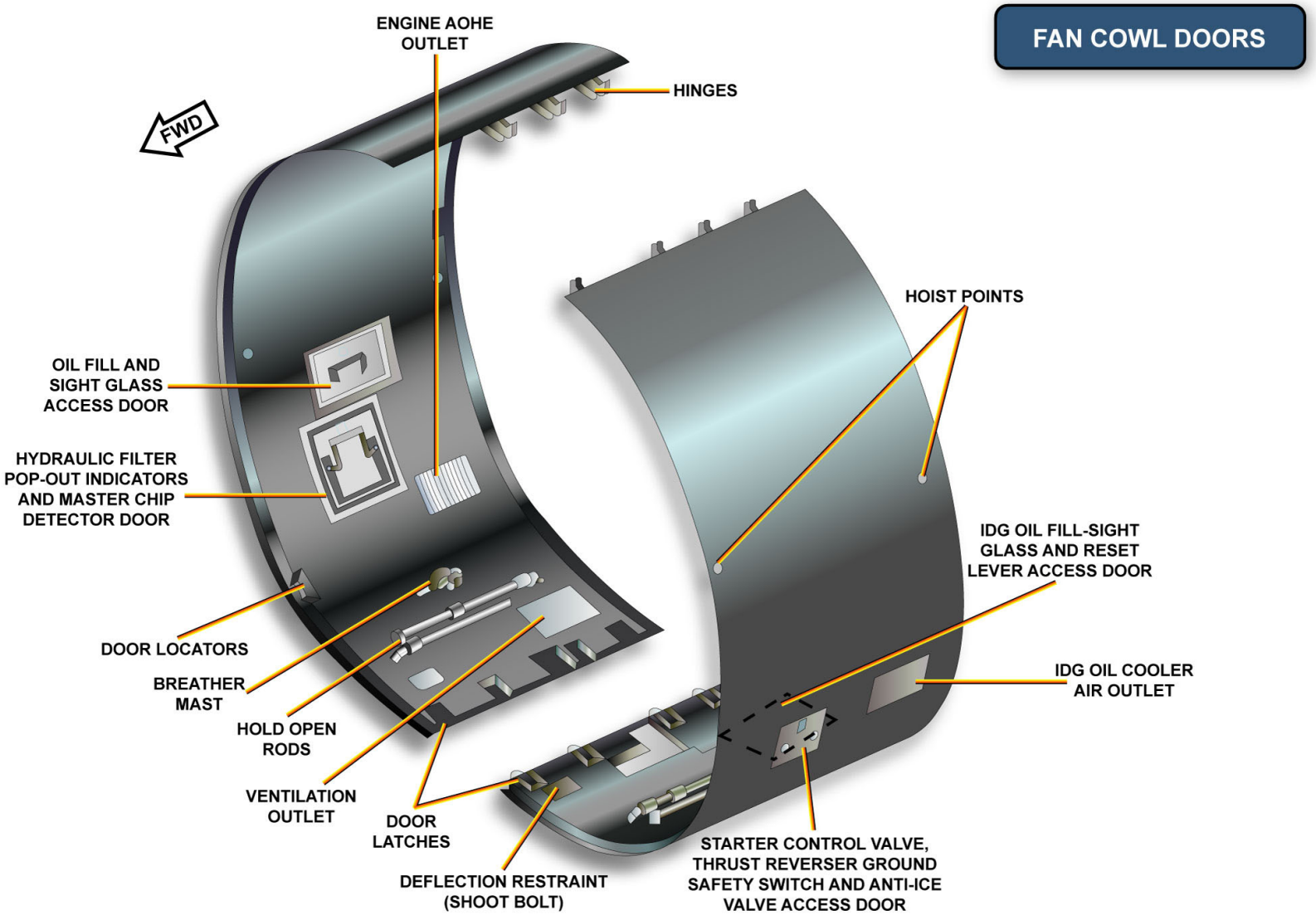

FAN COWL DOORS - LEFT FAN COWL & RIGHT FAN COWL

G7508471 - G3NT1T0 - FM70D800000071

NACELLE D/O (3)

FAN COWL DOORS (continued)

FAN COWL LATCHES

The fan cowls are latched together along the bottom centerline by four latches. The RH fan cowl has four hook type latches that adjust in four keepers on the LH fan cowl.
The keepers and the latches are installed into housings. Each keeper housing has one spigot and one bolt to be in contact with its related latch housing.
The latch handles are visible when they are not properly engaged. They are flushing when they are correctly engaged.

NOTE: Note: You must not open the fan cowls if wind speed is 60 MPH (96 KMH) or more.

The fan cowl latches must be operated in the following sequence 1, 3, 2, 4 (numbered from the front to the rear) for locking and unlocking.

G7508471 - G3NT1T0 - FM70D800000071

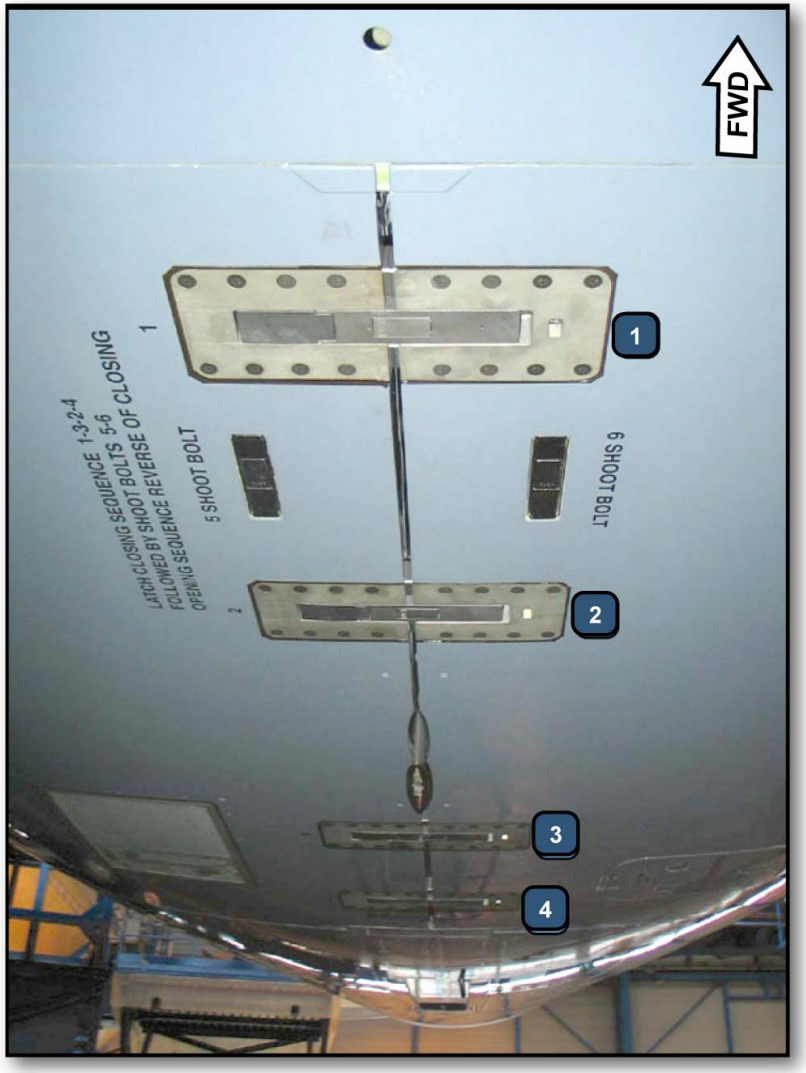

SEQUENCE FOR LOCKING AND UNLOCKING FAN COWL LATCHES

FAN COWL DOORS - FAN COWL LATCHES

NACELLE D/O (3)

THRUST REVERSER ASSEMBLY

The thrust reverser assembly has two halves (also called C-ducts) attached to the aircraft pylon with 5 hinges each and are latched together by means of 7 latches.
When the C-ducts are closed, they make a cover over the core engine and form a smooth bypass duct from the LP compressor (fan) into the Common Nozzle Assembly (CNA).
The thrust reverser assembly contains the mechanism for reversing the fan airflow during aircraft landing.
Each thrust reverser half opens hydraulically by means of an actuator located underneath the engine pylon and is secured open with two hold open rods. Operation of the actuators requires a hand operated hydraulic pump.
Each C-duct includes:
- a front frame,
- an inner fixed structure,
- an outer fixed structure,
- two pivoting doors.

G7508471 - G3NT1T0 - FM70D800000071

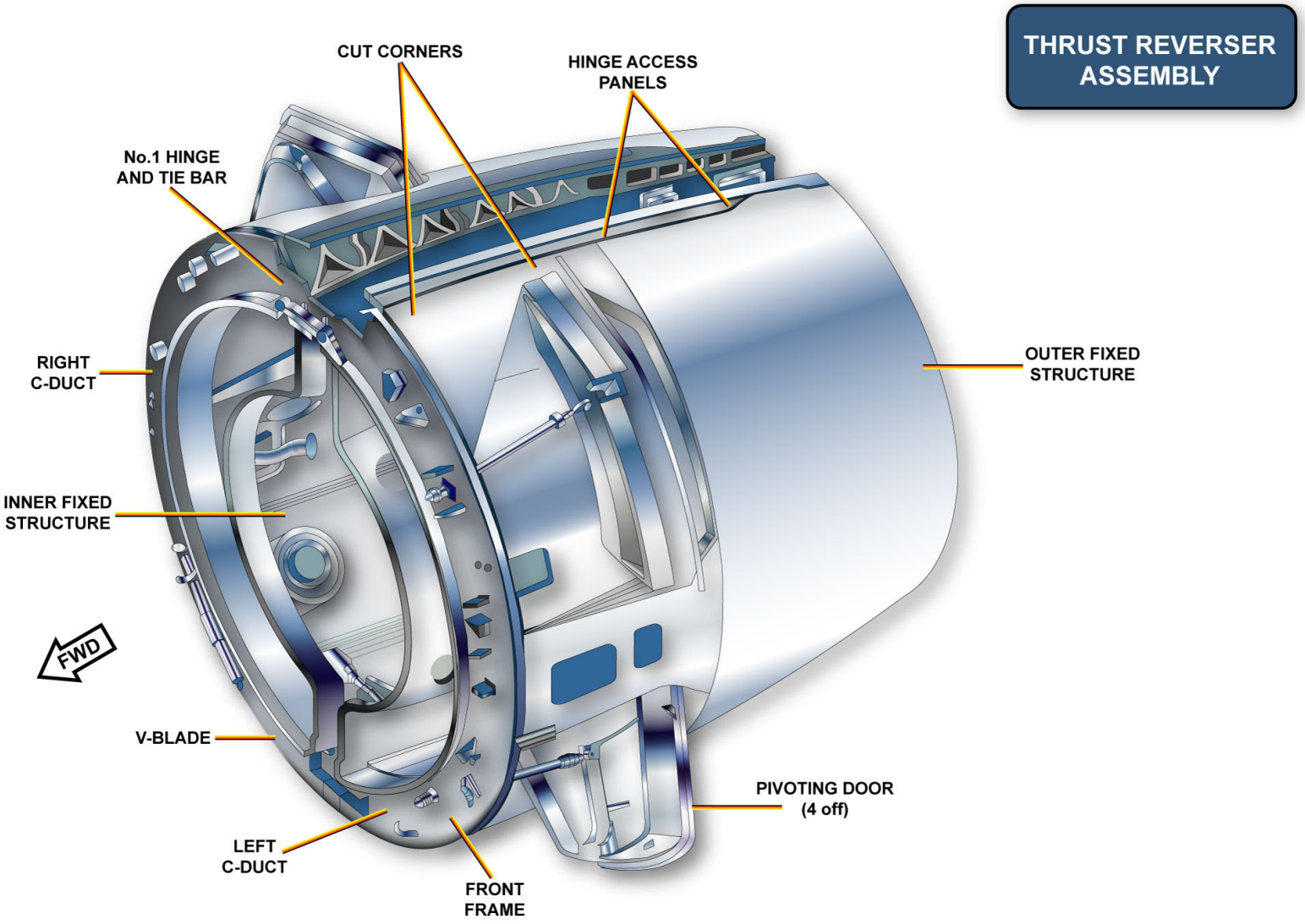

THRUST REVERSER ASSEMBLY

G7508471 - G3NT1T0 - FM70D800000071

NACELLE D/O (3)

THRUST REVERSER ASSEMBLY (continued)

THRUST REVERSER ASSEMBLY LATCHES

The C-ducts are latched together with seven latches:
- The number 1 latch is mounted on the front frame and is operated by a remote lever.
- The number 2 to 7 latches are mounted on the 6 o'clock beam.

Latches 3 and 4 are the shear-pin type and are accessible through the latch access and overpressure relief doors. The latches 1, 2, 5, 6 and 7 are of hook type.
A take-up device is installed between latches 3 and 4 that is used to pull the thrust reverser cowl doors together until you can fasten the latches easily.

NOTE: Note:
- You must not open the C-ducts if wind speed is 46 MPH (73 KMH) or more.
- Before opening the C-ducts the thrust reverser must be deactivated.
- The take-up device must be operated before to release the latches.
- The opening sequence is latches number 2, 5, 6, 7, 1, 3, 4.
- The closing sequence is latches number 3, 4, 1, 7, 6, 5, 2.

G7508471 - G3NT1T0 - FM70D800000071

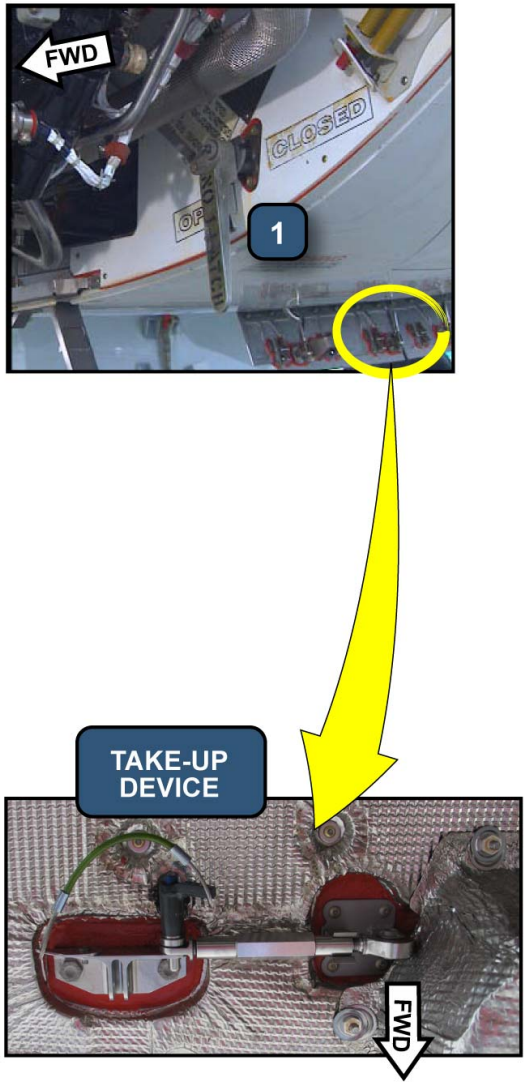

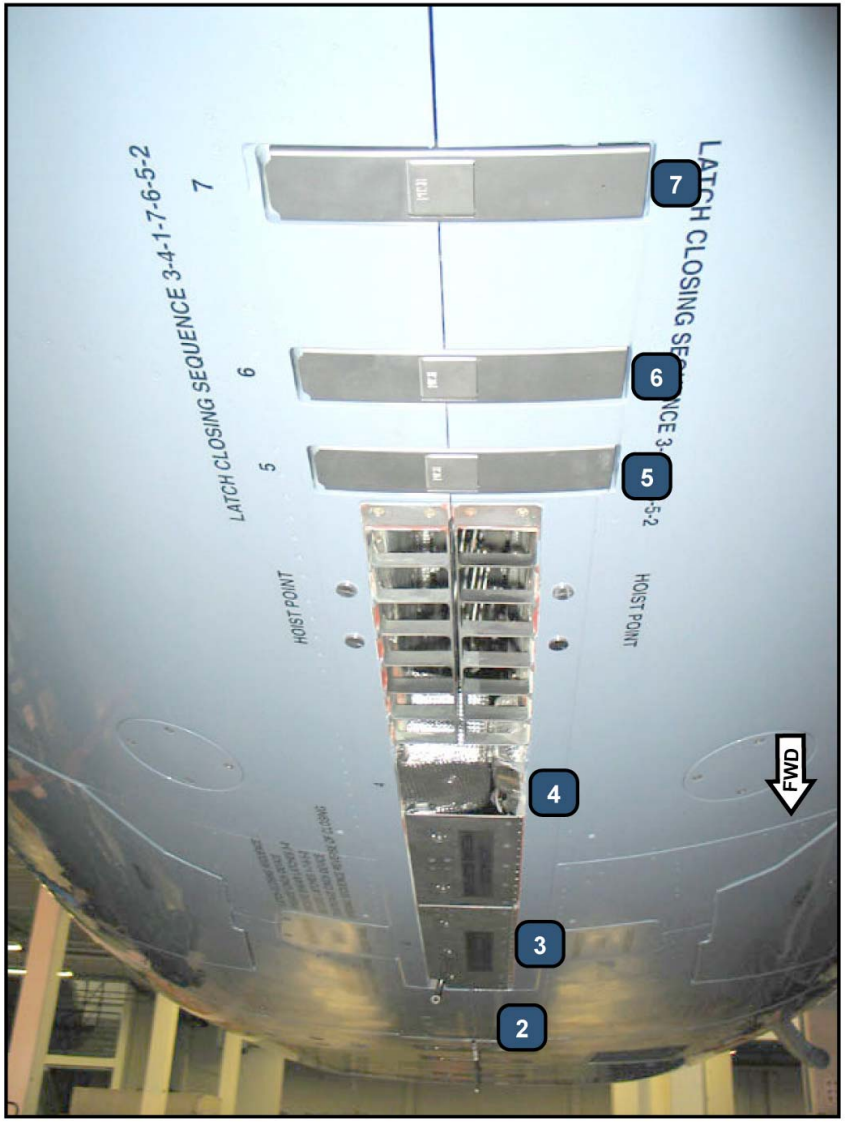

THRUST REVERSER ASSEMBLY - THRUST REVERSER ASSEMBLY LATCHES

NACELLE D/O (3)

COMMON NOZZLE ASSEMBLY

The function of the Common Nozzle Assembly (CNA) is to mix the core engine exhaust with the LP compressor (fan) air. The CNA has the shape of a convergent duct which increases the velocity of the mixed gas and thus gives added thrust.
The CNA is attached directly onto the LP turbine module of the engine.
The CNA is an interchangeable assembly that has an inner and an outer duct assembly. The inner duct assembly is annular and is the primary exhaust nozzle around the core engine exhaust. The outer duct assembly is held by six aerodynamic struts attached to the inner duct assembly.
If the CNA is replaced by an other CNA, which doesn't have the same nozzle EPR number, you can enter the new number with the Data Entry Plug (DEP).

G7508471 - G3NT1T0 - FM70D800000071

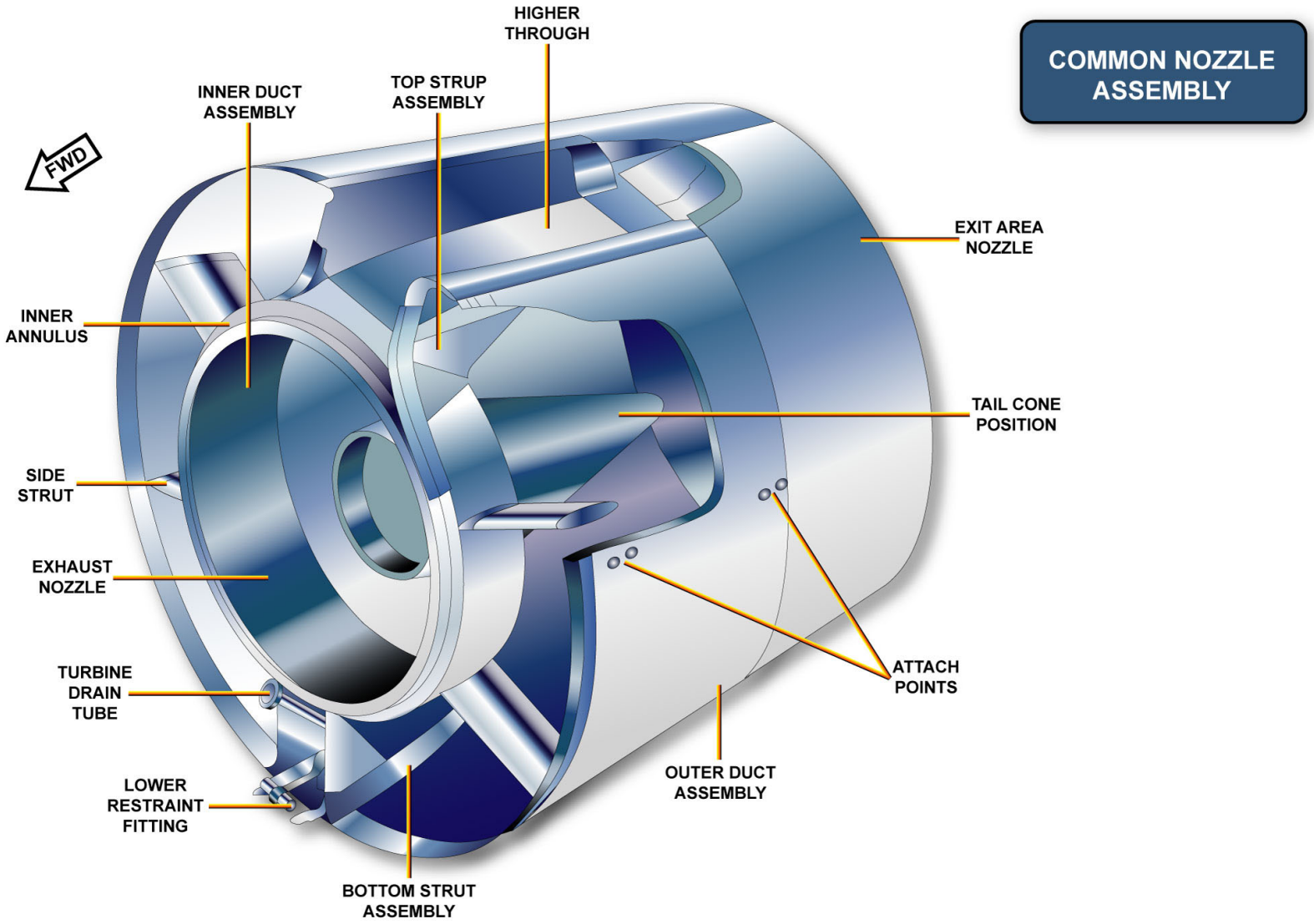

COMMON NOZZLE ASSEMBLY

G7508471 - G3NT1T0 - FM70D800000071

COMMON NOZZLE ASSEMBLY

This Page Intentionally Left Blank

G7508471 - G3NT1T0 - FM70D800000071

NACELLE D/O (3)

NACELLE ACCESS DOORS

Various access doors and panels around the engine give access to maintenance and servicing purposes.
These doors and panels are:
- P20/T20 probe access panel,
- hydraulic filter contamination indicator and master MCD access door,
- oil fill and sight glass access door,
- starter control valve and thrust reverser ground safety switch access door,
- IDG oil fill-sight glass and reset lever access door,
- pivot access panels,
- thrust reverser Rotational Variable Transducer (RVT) access panels,
- number 4 latch access panels.

G7508471 - G3NT1T0 - FM70D800000071

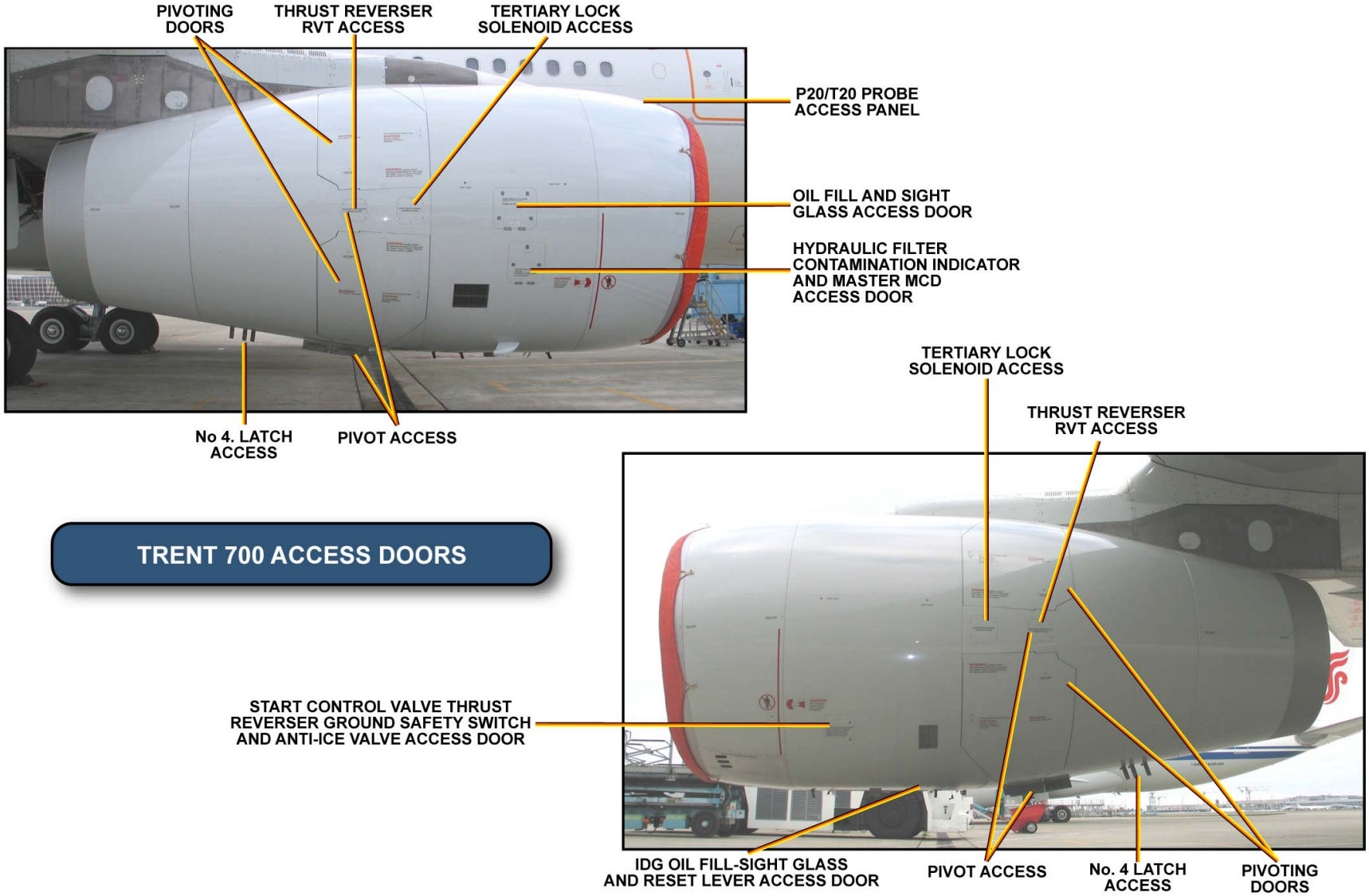

NACELLE ACCESS DOORS

G7508471 - G3NT1T0 - FM70D800000071

NACELLE D/O (3)

C-DUCT OPERATION

The opening mechanism is designed to hydraulically open and close the thrust reverser cowls.
The thrust reverser opening mechanism is composed of:
- one actuator for each C-duct,
- two hold open rods for each C-duct.

The pressure is supplied by the hydraulic hand pump to extend the actuator.
Actuators are operated until the C-duct is fully open. Once the C-duct is fully open, the hold open rods are installed and the pressure is released. The hold open rods lock automatically and keep the C-ducts open.

NOTE: Note: You must not open the thrust reverser cowls if wind speed is 46 MPH (73 KMH) or more.

G7508471 - G3NT1T0 - FM70D800000071

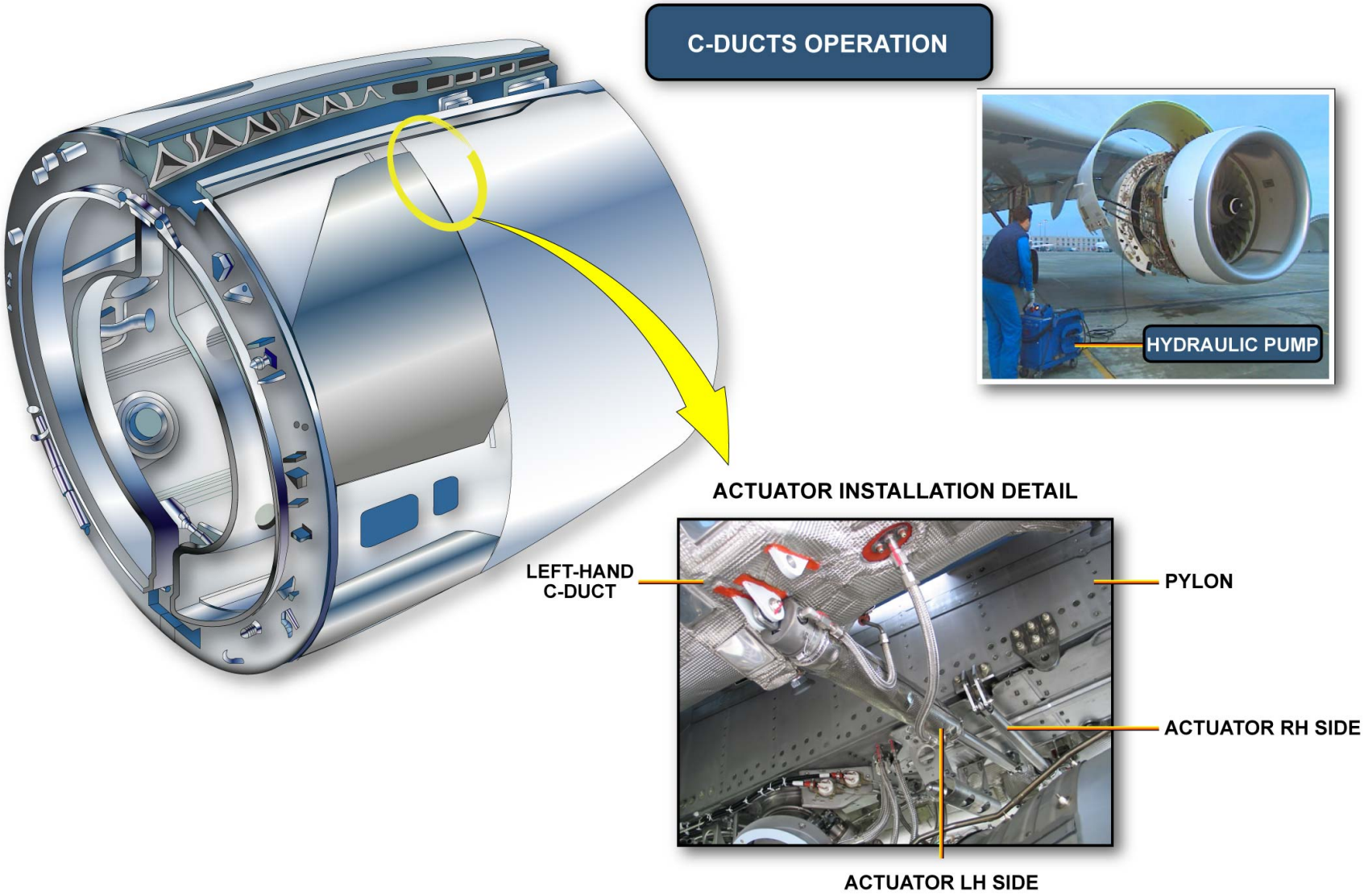

C-DUCT OPERATION

G7508471 - G3NT1T0 - FM70D800000071

ENGINE D/O (3)

GENERAL

The bare engine is an assembly of primary units, which are identified as modules. These modules can be independently replaced in shop and are specified as follows:
- Low Pressure (LP) compressor rotor,
- Intermediate Pressure (IP) compressor,
- intermediate case,
- High Pressure (HP) system (this includes the HP compressor, the combustion system and the HP turbine),
- IP turbine,
- external gearbox,
- LP compressor case,
- LP turbine.

The engine direction of rotation is counterclockwise, the pressure ratio is 37.42:1 and the bypass ratio is 4.66:1.
The weight of the dressed basic engine is 5107 kg (11259 lb) approximately. The engine has different thrust ratings according to different engine version.
The engine hardware is the same and the thrust rating is defined through the Data Entry Plug (DEP).
The DEP is installed and plugged into the Engine Electronic Controller (EEC).

G7508471 - G3NT1T0 - FM70D100000071

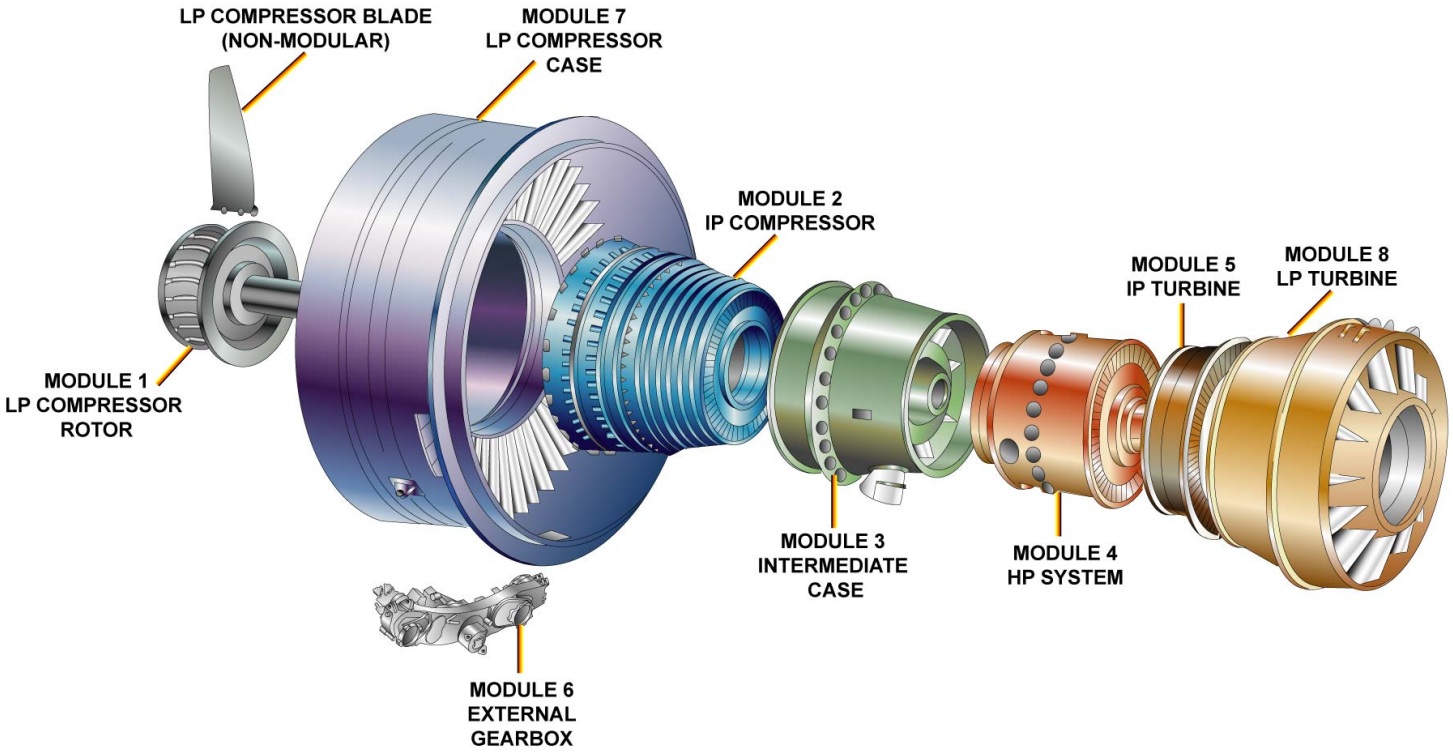

GENERAL

G7508471 - G3NT1T0 - FM70D100000071

ENGINE D/O (3)

ENGINE ROTORS AND MODULES

The three rotating assemblies include:
- the LP Compressor (fan) connected by a shaft to the LP turbine,
- the IP compressor connected by a shaft to the IP turbine,
- the HP compressor connected by a shaft to the HP turbine.

Shafts are supported by ball and roller bearings.

G7508471 - G3NT1T0 - FM70D100000071

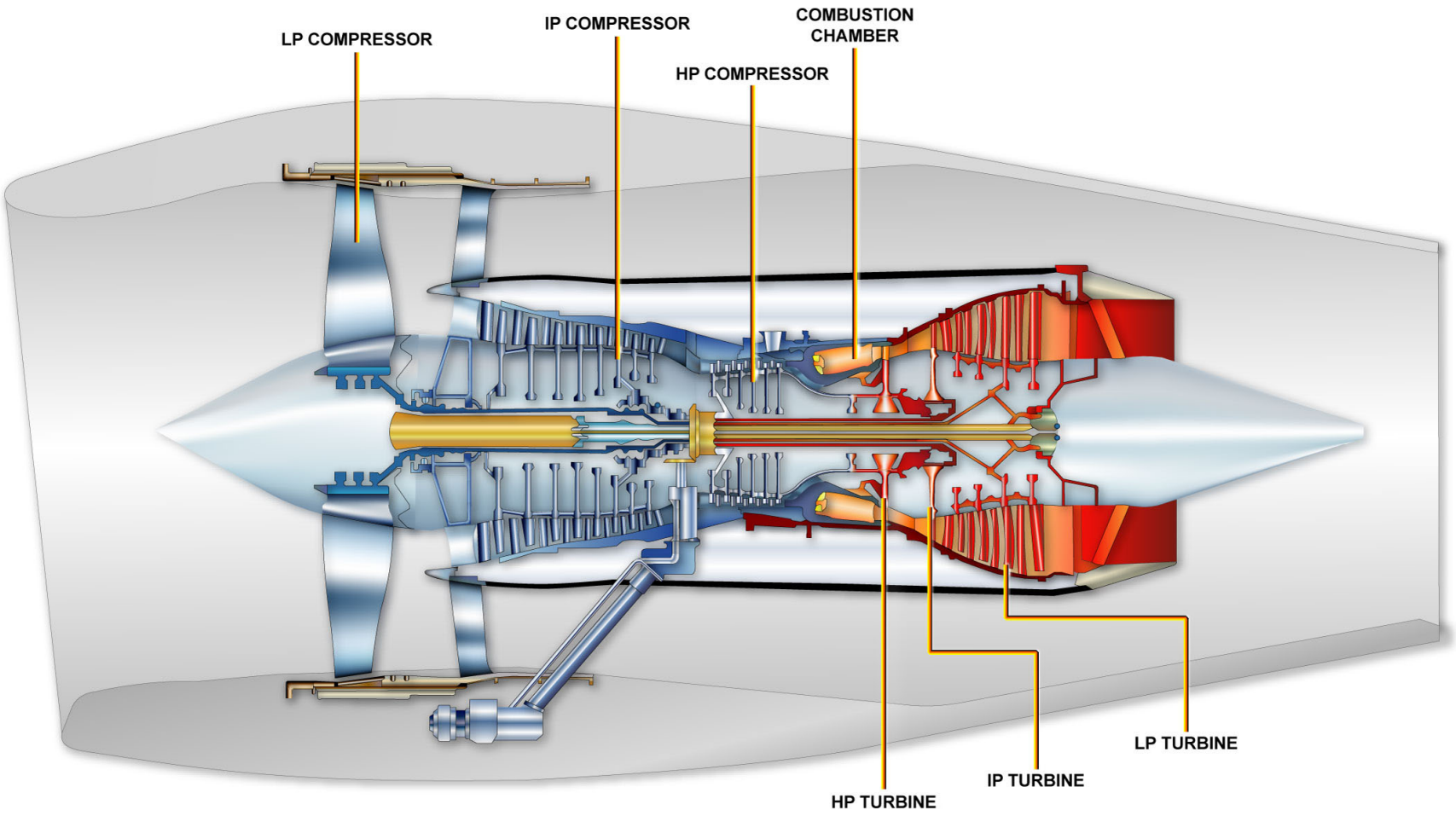

ENGINE ROTORS AND MODULES

G7508471 - G3NT1T0 - FM70D100000071

ENGINE D/O (3)

ENGINE ROTORS AND MODULES (continued)

LOW PRESSURE COMPRESSOR AND TURBINE

The one stage LP compressor (fan) has 26 wide-chord type blades which are engaged in axial dovetail slots. Each fan blade is held in the disk by two shear keys.
The LP compressor is located in the fan case. The fan case is made of two cylindrical cases, which are connected together with nuts and bolts.
The front part of this assembly contains the LP compressor rotor and the rear part includes the Outlets Guide Vanes (OGVs).
Attached to the outside of the rear part there are many system components, electrical harness and tubes.
The LP compressor shaft connects the fan disk through a curvic coupling that gives the accurate location.
The LP turbine has four disks which are bolted together to make a drum.
The stage 3 disk acts as the drive arm and is attached to the turbine shaft with a curvic coupling.
The LP turbine case supports the rear engine mount.

G7508471 - G3NT1T0 - FM70D100000071

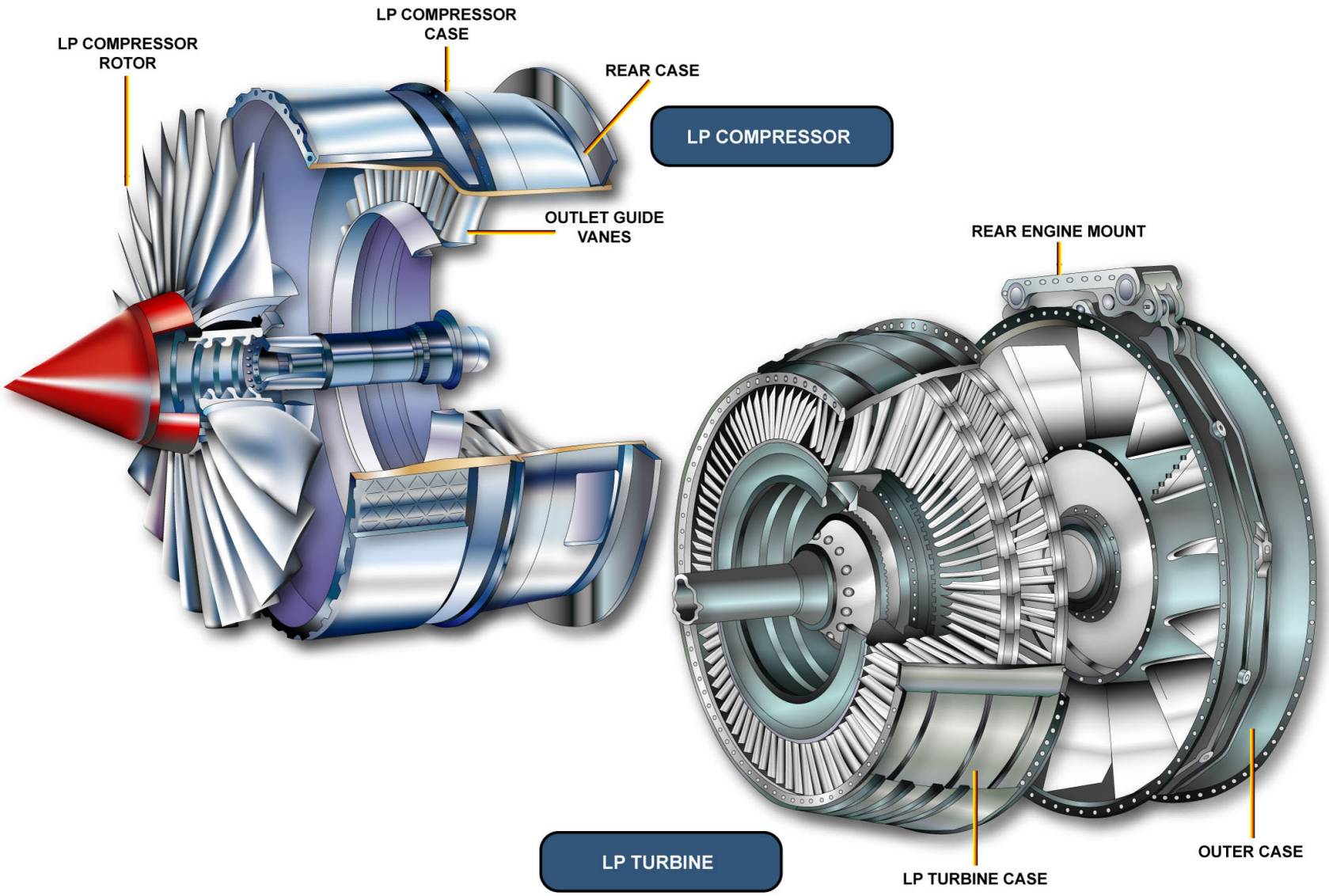

ENGINE ROTORS AND MODULES - LOW PRESSURE COMPRESSOR AND TURBINE

G7508471 - G3NT1T0 - FM70D100000071

ENGINE D/O (3)

ENGINE ROTORS AND MODULES (continued)

INTERMEDIATE PRESSURE COMPRESSOR AND TURBINE

The IP compressor rotor is an assembly of 8 titanium rotor disks welded together as one drum.
The disks at stages 1 to 6 have axial dovetail slots into which the rotor blades are installed. At stages 7 and 8, the blades are installed in circumferential dovetail slots.
The IP compressor case is divided into two semicircular half cases. The front part contains the Variable Inlet Guide Vanes (VIGVs), the two stages of Variable Stator Vanes (VSVs) and the associated actuating rings. The rear part contains stages 3 to 8 of the compressor stator vanes.
The intermediate case is made from two cylindrical titanium casings welded together.
The front part is installed around the rear part of the IP compressor case and the rear part around the front part of the HP compressor. The front part includes the engine front mount and the rear part includes ten structural vanes to which the internal gearbox housing is connected.
The IP turbine is a single stage turbine assembly. At the hub of the disk a drive arm extends rearwards, and connects the IP turbine shaft and stub shaft by using taper bolts.
The IP turbine shaft runs forward and is connected to the IP compressor stub shaft with helical splines.
In front of the IP turbine there are 26 Nozzle Guide Vanes (NGVs) which are radially installed around the turbine case.
Adjacent to the casing rear flange is a Turbine Case Cooling (TCC) air manifold and the location bosses for 11 thermocouples.

G7508471 - G3NT1T0 - FM70D100000071

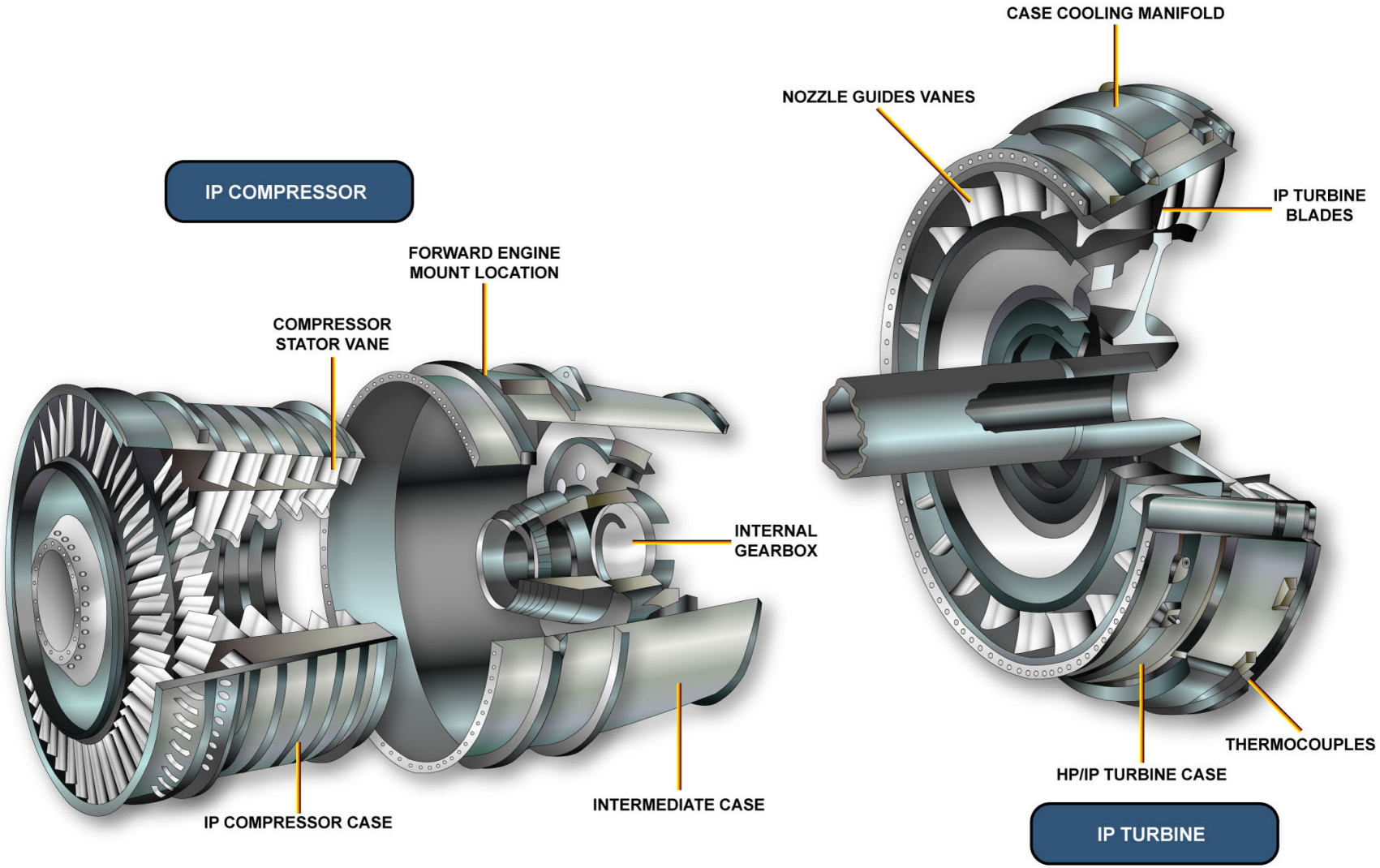

ENGINE ROTORS AND MODULES - INTERMEDIATE PRESSURE COMPRESSOR AND TURBINE

G7508471 - G3NT1T0 - FM70D100000071

ENGINE D/O (3)

ENGINE ROTORS AND MODULES (continued)

HIGH PRESSURE COMPRESSOR, COMBUSTION CHAMBER AND TURBINE

The HP system includes:
- the HP compressor,
- the combustion chamber,
- the HP turbine.

The HP compressor rotor is a six-stage assembly of titanium disks welded together to make a drum. The first stage blades are installed in axial dovetail slots and are locked with retaining plates. Stage 2 to 6 are installed in circumferential dovetail slots and locked with special nut and screw assemblies.

The HP compressor case is an assembly of 5 flanged cylindrical casings bolted together.

The combustion chamber is fully annular and includes an inner and an outer combustion liners.

24 locations are provided to receive the fuel spray nozzles. There are also 2 igniter plugs installed through bosses in the combustion chamber outer case.

There are 40 NGVs installed at the combustion chamber outlet which are held by a support ring and attached with bolts to the combustion inner case.

The HP turbine is a single stage disk which is attached to the rear of the compressor drum with bolts. On the rear of the disk there is a flange that is attached to a stubshaft. The disk has firtree roots into which fit the turbine blades.

G7508471 - G3NT1T0 - FM70D100000071

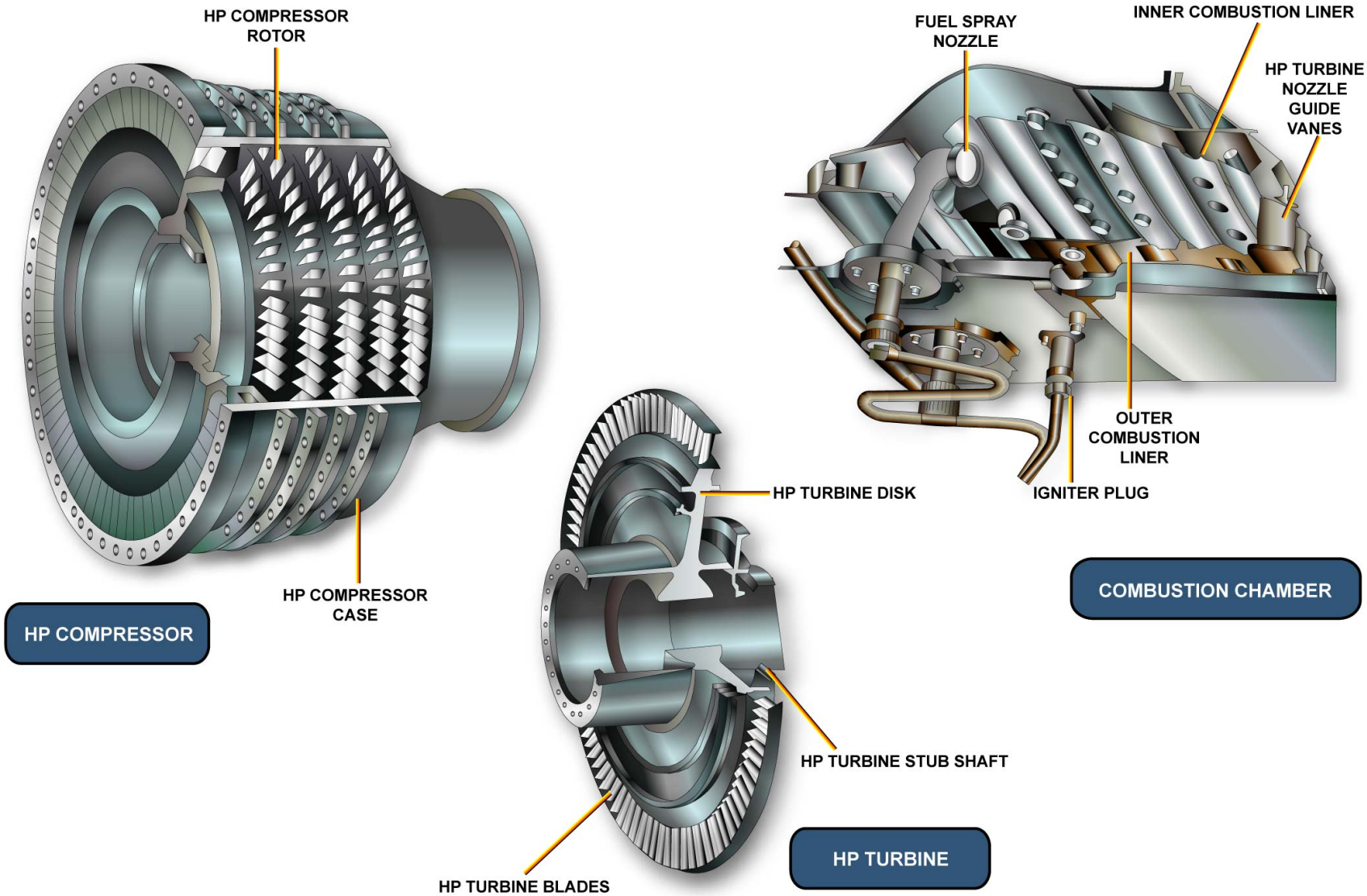

ENGINE ROTORS AND MODULES - HIGH PRESSURE COMPRESSOR, COMBUSTION CHAMBER AND TURBINE

G7508471 - G3NT1T0 - FM70D100000071

ENGINE D/O (3)

ENGINE ROTORS AND MODULES (continued)

ENGINE BEARINGS

Two types of bearings are used in this engine:
- roller bearings keep the shafts in the correct radial position,
- location thrust ball bearings for all three shafts are positioned in the internal gearbox.

The LP and IP rotor assemblies are each supported by three bearings.
The HP rotor is supported by two bearings.
There are 4 bearing chambers:
- the front bearing chamber includes the LP and the IP roller bearings,
- internal gearbox bearing chamber includes the LP, IP and HP location bearings,
- HP/IP turbine bearing chamber includes the HP and IP turbine roller bearings,
- LP turbine bearing chamber includes the LP turbine roller bearing and the LP turbine spring pack bearing.

Bearing chambers are sealed using IP and HP air and are isolated from other engine parts by labyrinth seals.

G7508471 - G3NT1T0 - FM70D100000071

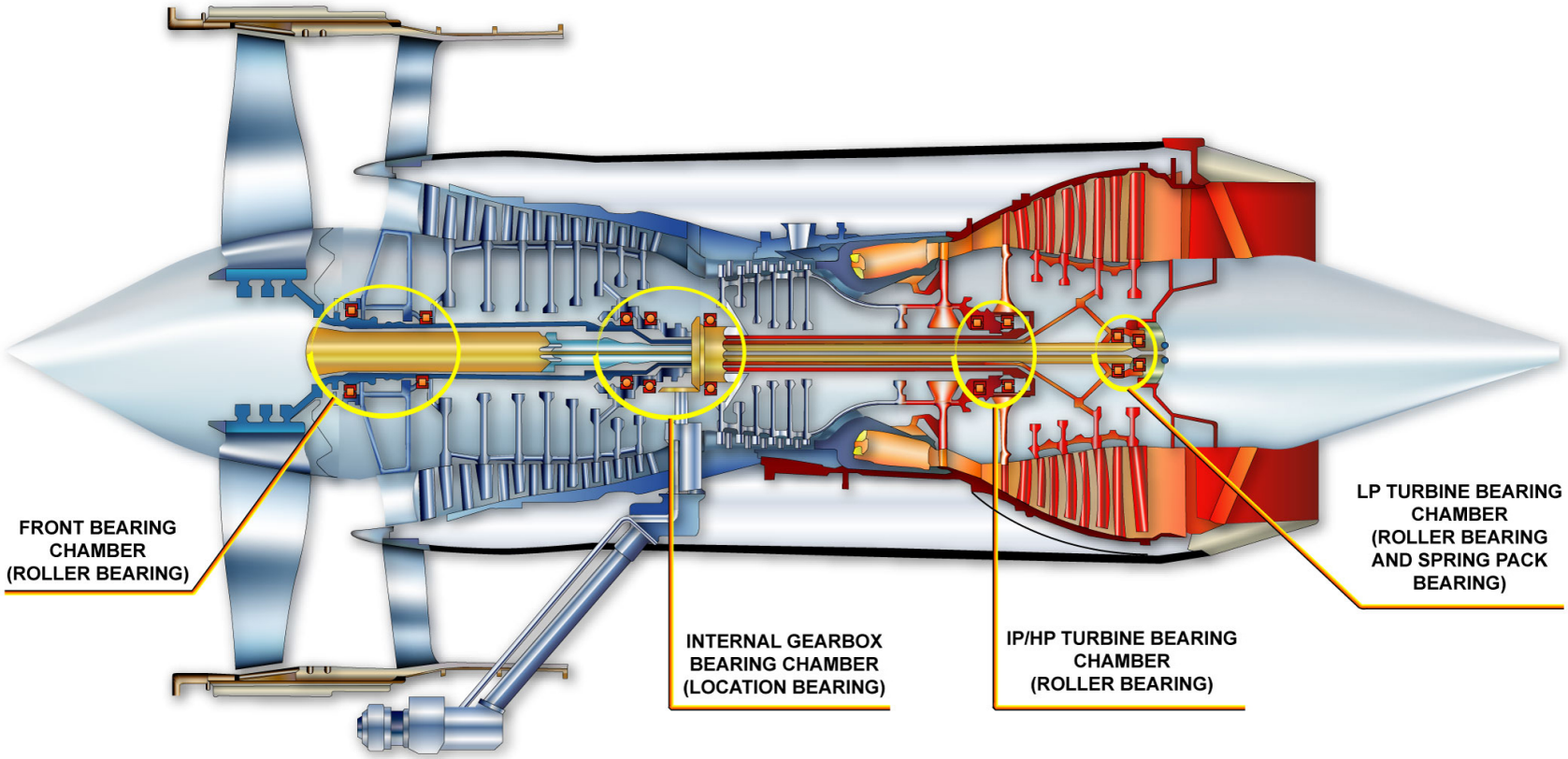

ENGINE ROTORS AND MODULES - ENGINE BEARINGS

ENGINE D/O (3)

ACCESORY DRIVE SECTION

The accessory drive section transmits mechanical power from the HP rotor to the accessory units installed on the external gearbox. The drive section is equipped with the following assemblies:
- an internal gearbox,
- an intermediate gearbox,
- an external gearbox drive shaft,
- an external gearbox module.

G7508471 - G3NT1T0 - FM70D100000071

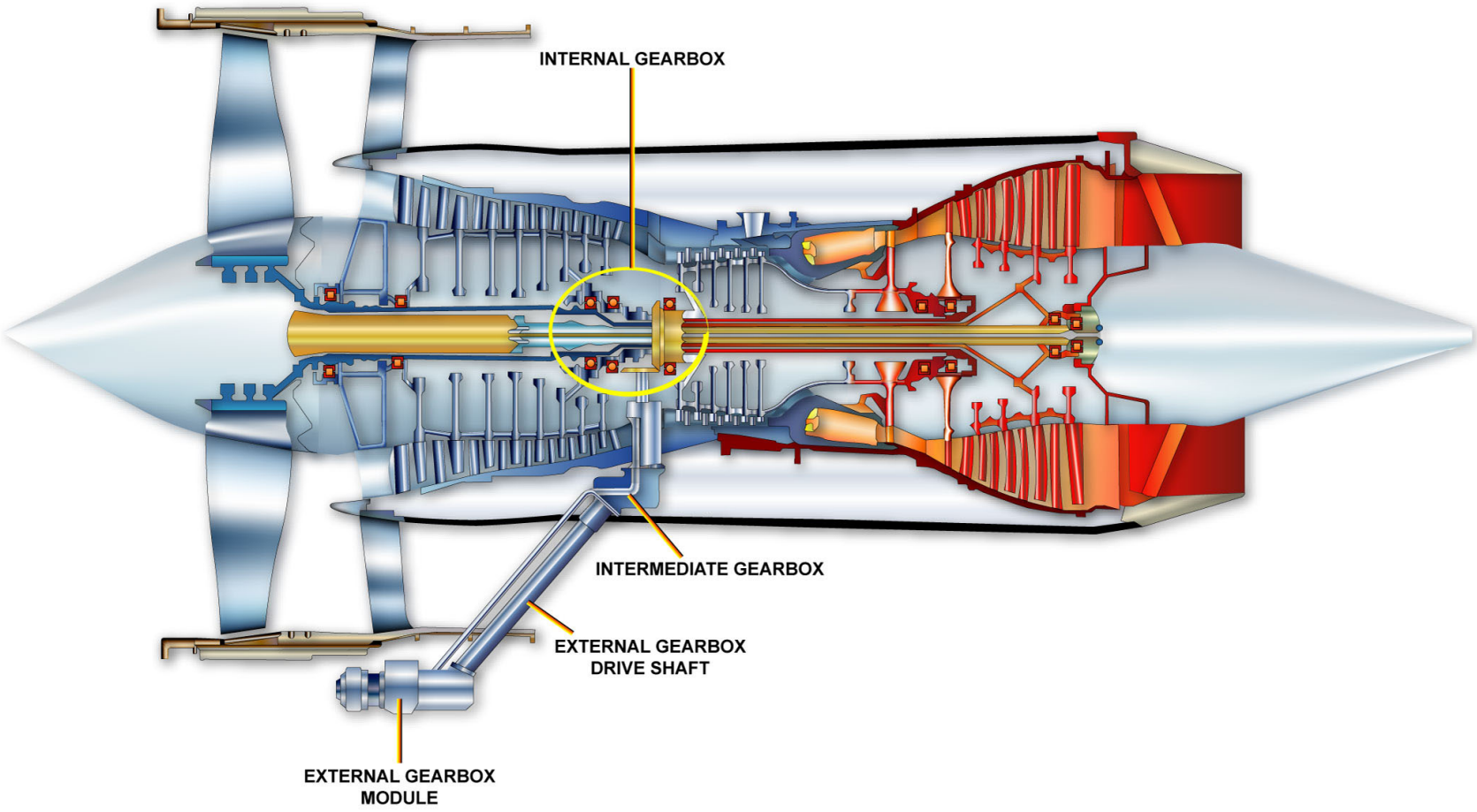

ACCESORY DRIVE SECTION

G7508471 - G3NT1T0 - FM70D100000071

ENGINE D/O (3)

ACCESORY DRIVE SECTION (continued)

EXTERNAL GEARBOX MODULE

The external gearbox module is an aluminum alloy casting. It is installed below the LP compressor case.
The gearbox transmits power from the engine to drive the accessories mounted on the gearbox front and rear faces.
During starting, the gearbox also transmits power from the air starter motor to the engine.
The components installed on the forward face are:
- pneumatic starter,
- EEC dedicated alternator,
- centrifugal breather assembly,
- hydraulic pump number 1.

The components installed on the rear face are:
- Integrated Drive Generator (IDG),
- input drive bevel gears,
- oil pump,
- fuel pump,
- hydraulic pump number 2.

NOTE: Note: for maintenance purposes, hand turning of the HP rotor system is achieved through the centrifugal breather assembly.

G7508471 - G3NT1T0 - FM70D100000071

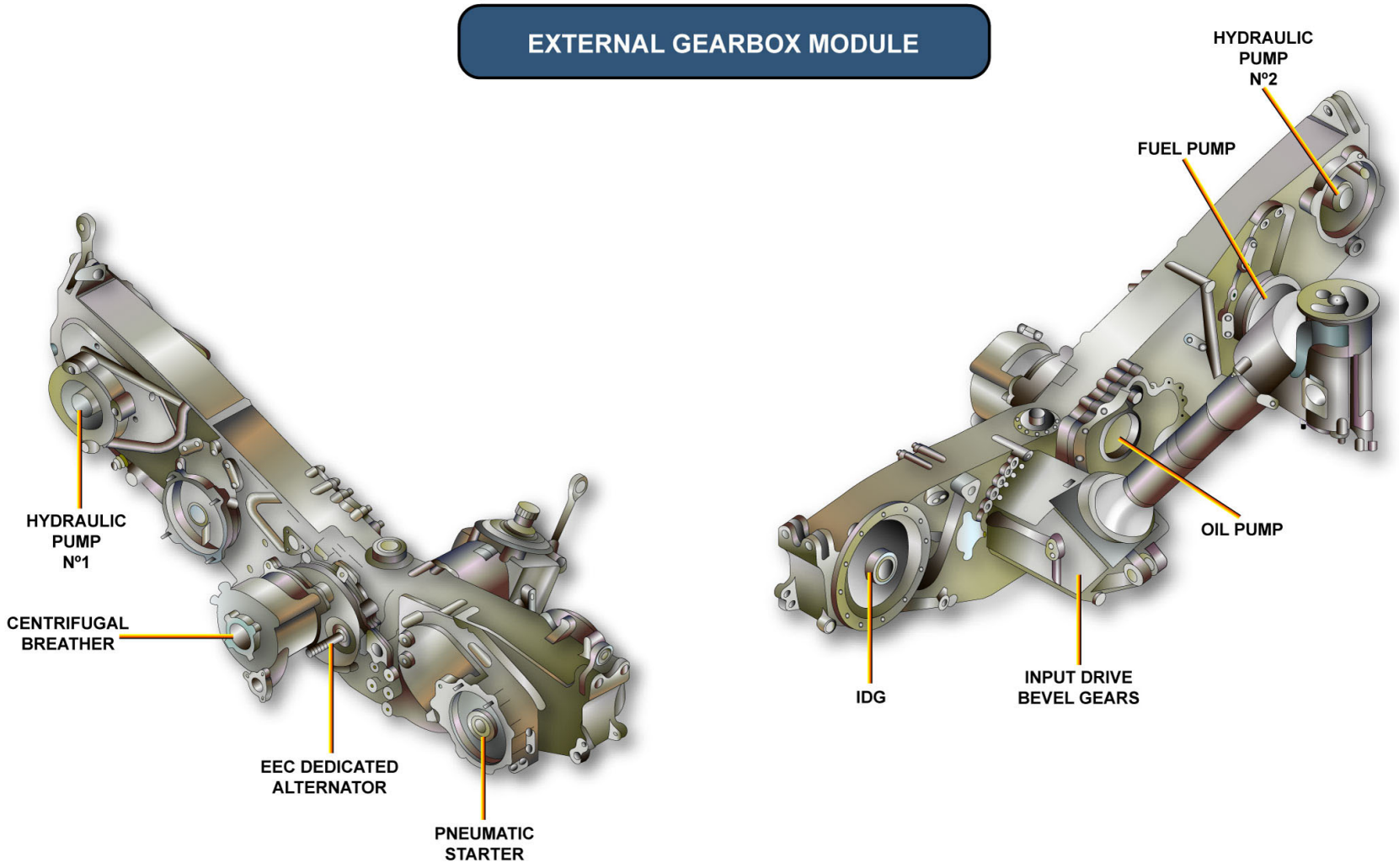

ACCESORY DRIVE SECTION - EXTERNAL GEARBOX MODULE

G7508471 - G3NT1T0 - FM70D100000071

ENGINE D/O (3)

DRAINS SYSTEM

The drains system has the following functions:
- To remove and discard fuel and/or oil if a leak occurs from an internal seal in specified primary components. The drains system can be used to monitor the condition of these seals.
- To remove and discard all unwanted liquids collected in the pylon, cowls and fairings.
- To collect unburned fuel from the combustion chamber following an engine shut down or a start procedure not completed.

Leaks from the accessories are drained overboard via a drains mast.
The items that are connected to the drains mast are:
- the Air Oil Heat Exchanger (AOHE),
- the hydraulic pump number 1,
- the hydraulic pump number 2,
- the LP/HP fuel pumps,
- the Fuel Metering Unit (FMU),
- the pneumatic starter,
- the IDG,
- the VSV actuators,
- the drain collector tank, and
- the oil tank.

NOTE: Note: the two VSV actuators, the AOHE and the FMU are connected to the same drain outlet at the drains mast, as well as the IDG and the starter. But the drain tube from each actuator, the AOHE and the IDG have a sump for better source leak detection.

Other tubes in the drains system remove unwanted fluids from the pylon primary structure, from the area behind the core fairings and from the LP turbine area.

G7508471 - G3NT1T0 - FM70D100000071

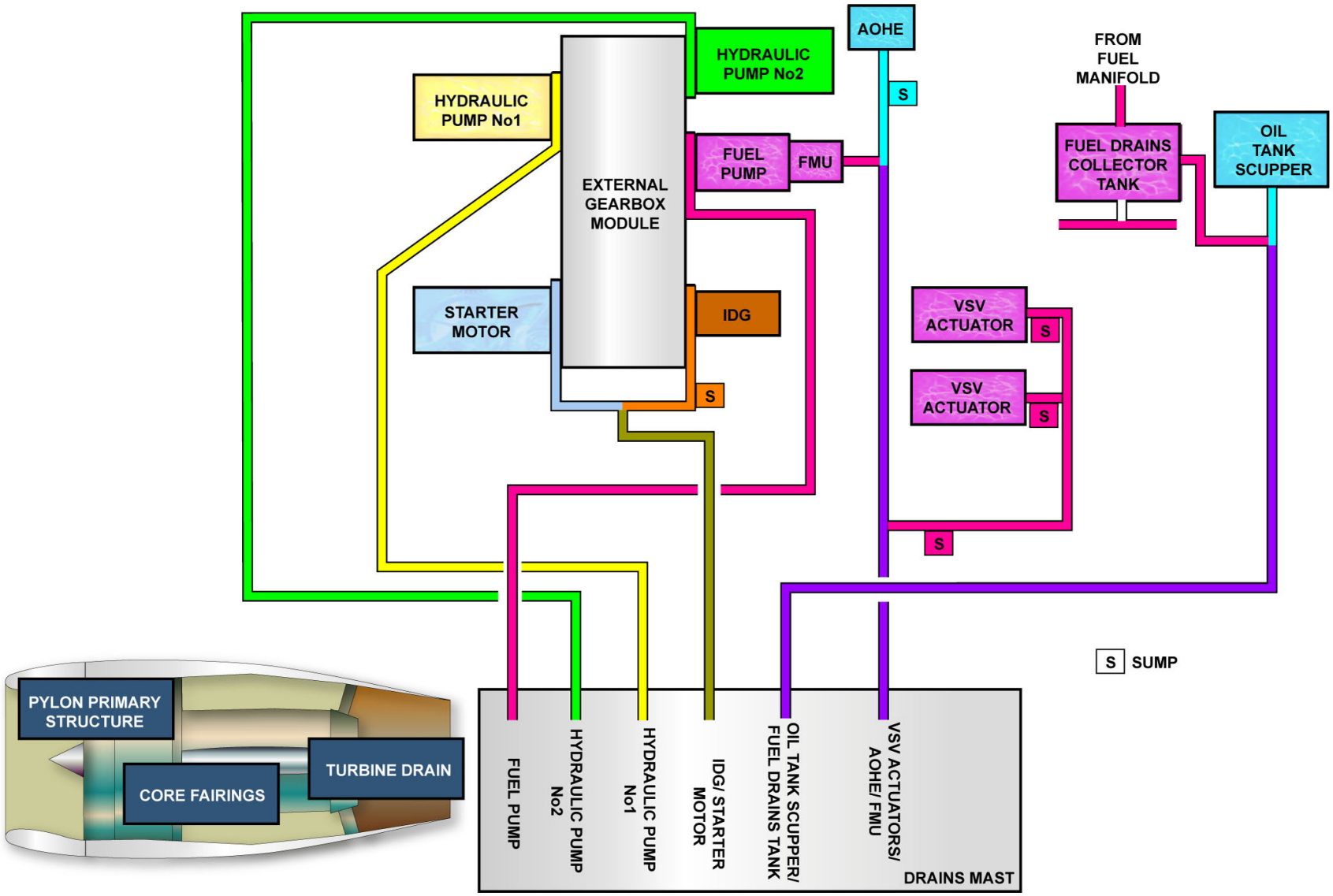

DRAINS SYSTEM

G7508471 - G3NT1T0 - FM70D100000071

ENGINE D/O (3)

DRAINS SYSTEM (continued)

DRAINS MAST

The drains mast has six outlets for the routing of drained fluids overboard and is installed on the forward face of the external gearbox module adjacent to the collector tank.
The related components from each drain outlet are identified on the side of the drains mast.

G7508471 - G3NT1T0 - FM70D100000071

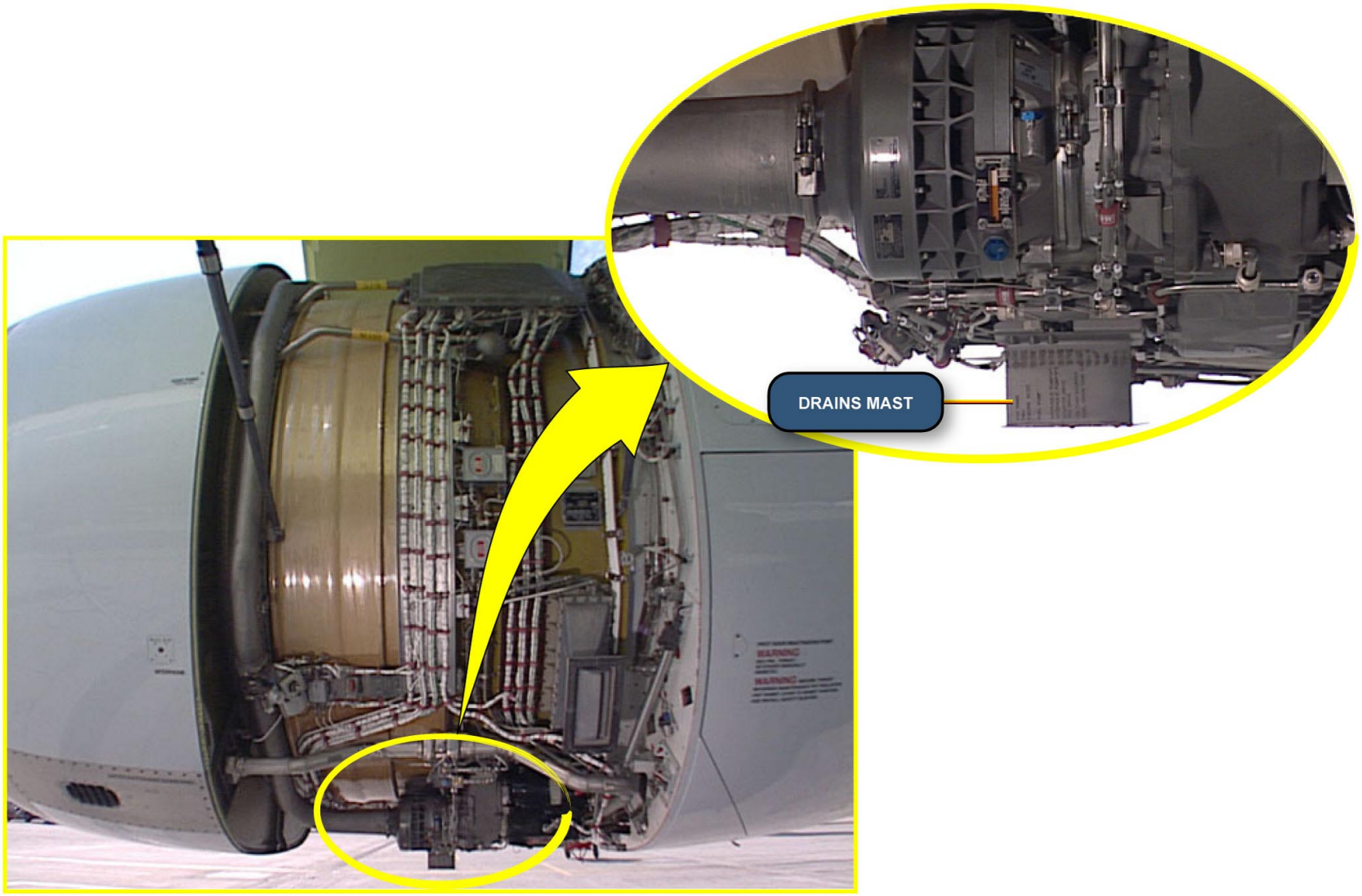

DRAINS SYSTEM - DRAINS MAST

ENGINE D/O (3)

DRAINS SYSTEM (continued)

DRAINS COLLECTOR TANK

The drain system has also a drains collector tank / ejector assembly which is installed on the forward face of the external gearbox module and connected to the drains mast too.
The tank collects excessive and unused fuel that drains from the fuel manifold when the engine is shut-down or after an engine start abort.
The ejector sends the fuel back to the LP fuel system during engine start.
If the tank is full, the fuel is discarded overboard via the drains mast.

G7508471 - G3NT1T0 - FM70D100000071

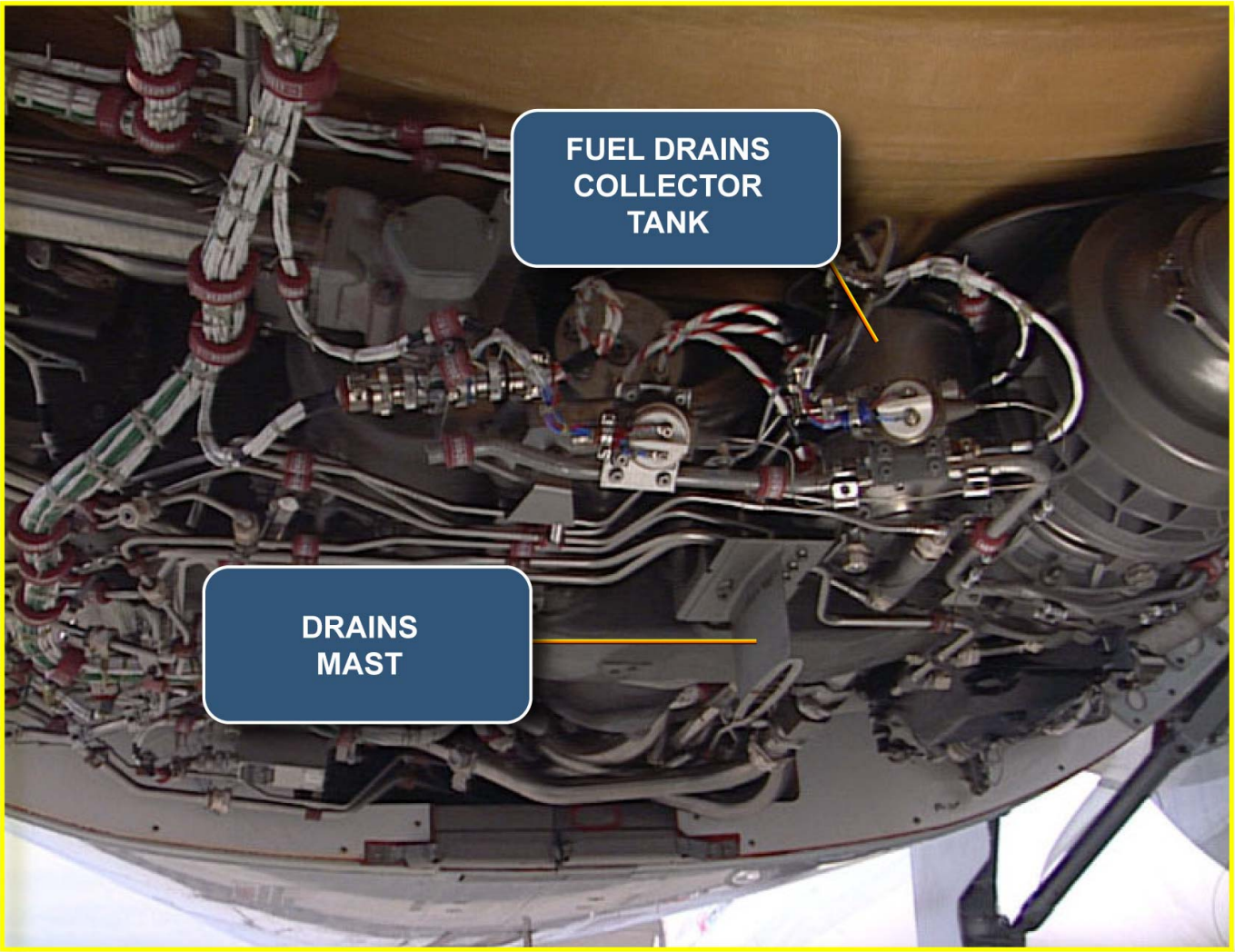

DRAINS SYSTEM - DRAINS COLLECTOR TANK

G7508471 - G3NT1T0 - FM70D100000071

ENGINE D/O (3)

AERODYNAMIC STATIONS

Engine parameters are measured at various stations throughout the engine.
The stations can be described as follows:
- 0 In front of intake lip (atmospheric),
- 20 Inlet to LP compressor (fan) (P20/T20),
- 24 Inlet to IP compressor,
- 25 Inlet to HP compressor (P25*/T25),
- 30 Exit from HP compressor (P30/T30),
- 40 Exit from combustion chamber,
- 50 Exit from LP turbine (P50),
- 160 Fan stream (by-pass) (P160*).

The Exhaust Gas Temperature (EGT) is measured at the inlet to the LP turbine, which corresponds to station 49.5. Eleven thermocouples are installed approximately equally around the engine within the LP1 turbine nozzle guide vanes and transmits EGT signal to the EEC..

G7508471 - G3NT1T0 - FM70D100000071

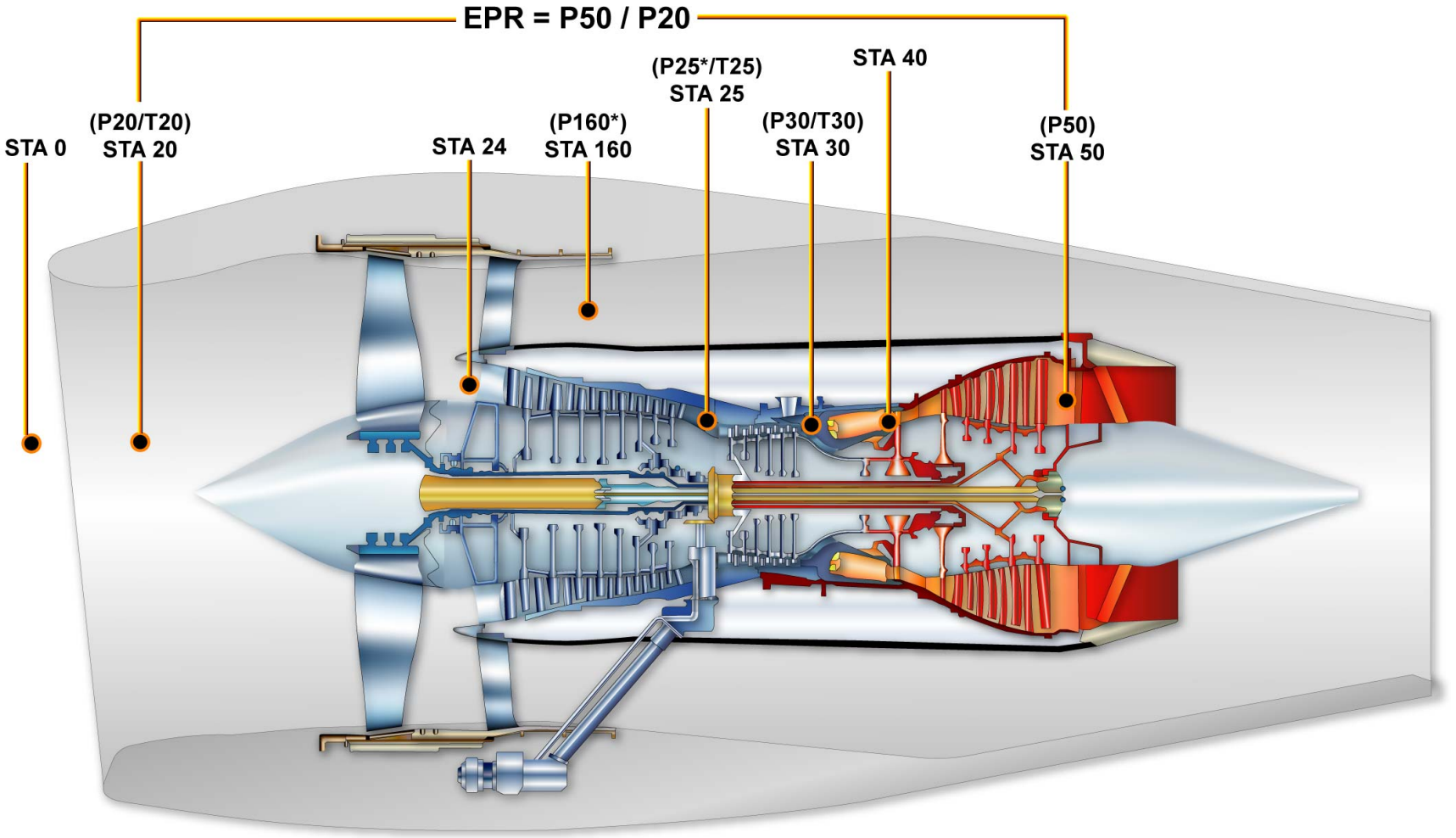

* OPTIONAL IF ENGINE CONDITIONING AND MONITORING SYSTEM IS INSTALLED

AERODYNAMIC STATIONS

G7508471 - G3NT1T0 - FM70D100000071

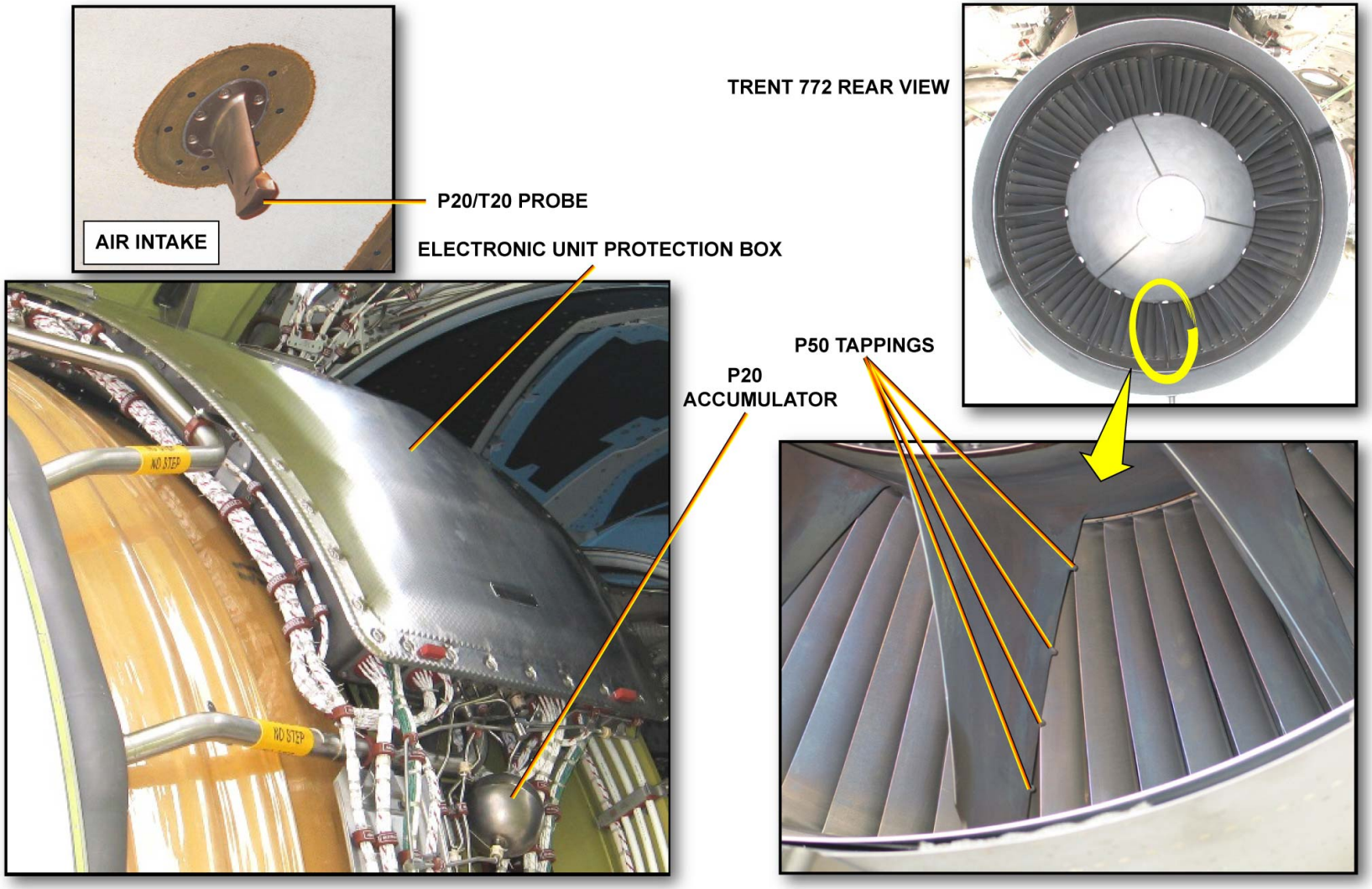

AERODYNAMIC STATIONS

G7508471 - G3NT1T0 - FM70D100000071

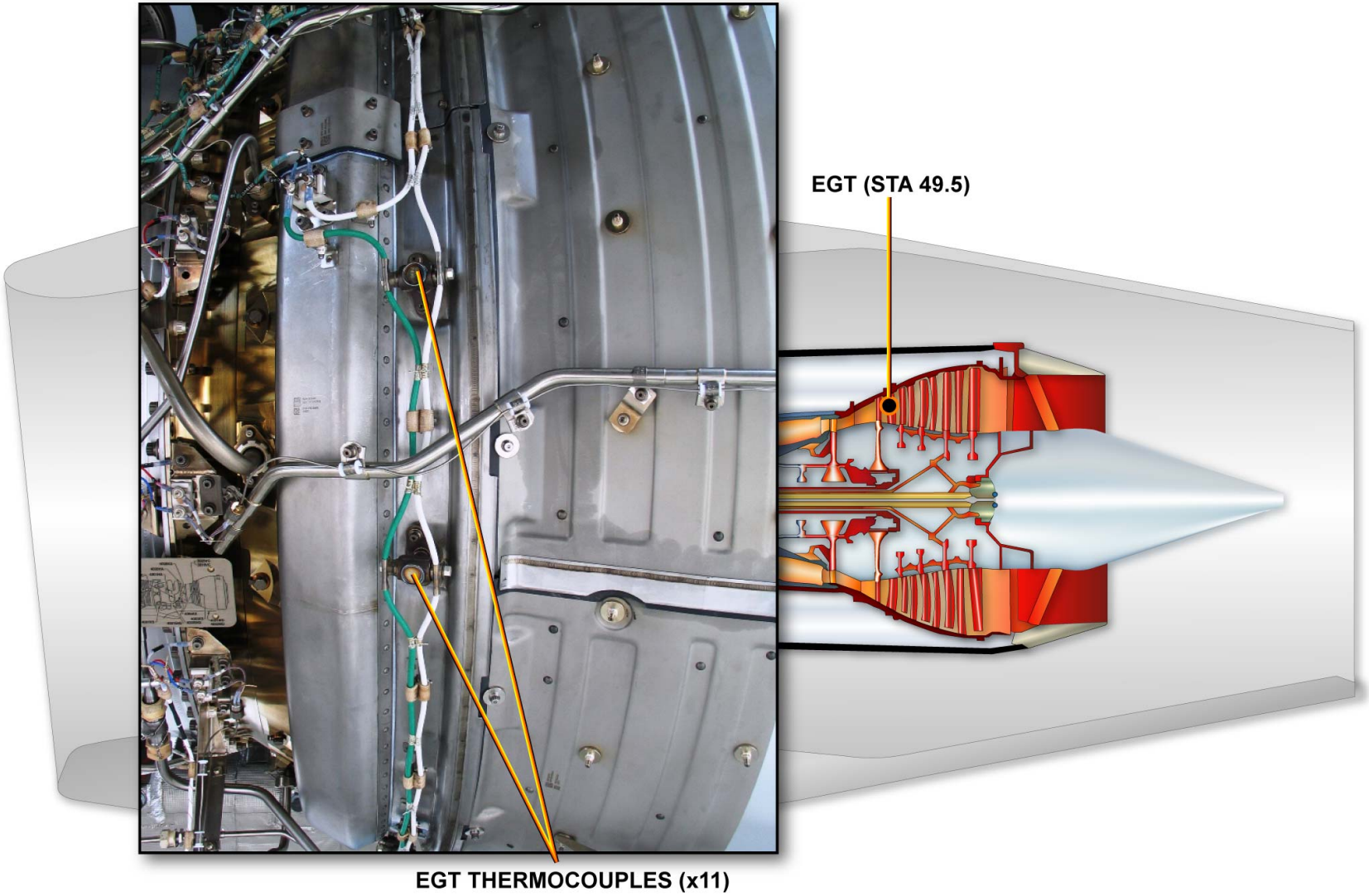

AERODYNAMIC STATIONS

G7508471 - G3NT1T0 - FM70D100000071

ENGINE D/O (3)

BORESCOPE ACCESS PORTS

It is possible to visually examine the engine at different positions by the use of borescope equipment.
There are 4 borescope access ports on the IP compressor case. They are located on the right side with access via the right thrust reverser half and right bottom gas generator fairing.
The HP compressor has 4 borescope access ports.
They are located on the compressor case, on the lower right hand side, with access via the right thrust half reverser.
There are 8 combustion chamber access ports located radially around the combustion outer case. Three of these access ports are occupied by T30 thermocouples. The 2 igniter ports could be used as borescope ports.
There are 2 access ports to view the HP turbine.
They are both located on the lower right hand side of the core, one on the HP turbine case, the other on the IP turbine case.
There are 2 access ports to view the IP turbine located on the lower right hand side of the core.
The one on the IP turbine case lets the IP turbine blade leading edge be seen.
The front access port on the LP turbine lets the IP turbine trailing edge be seen.
There are 4 access ports on the LP turbine case, lower right hand side to view the LP turbine assembly.

G7508471 - G3NT1T0 - FM70D100000071

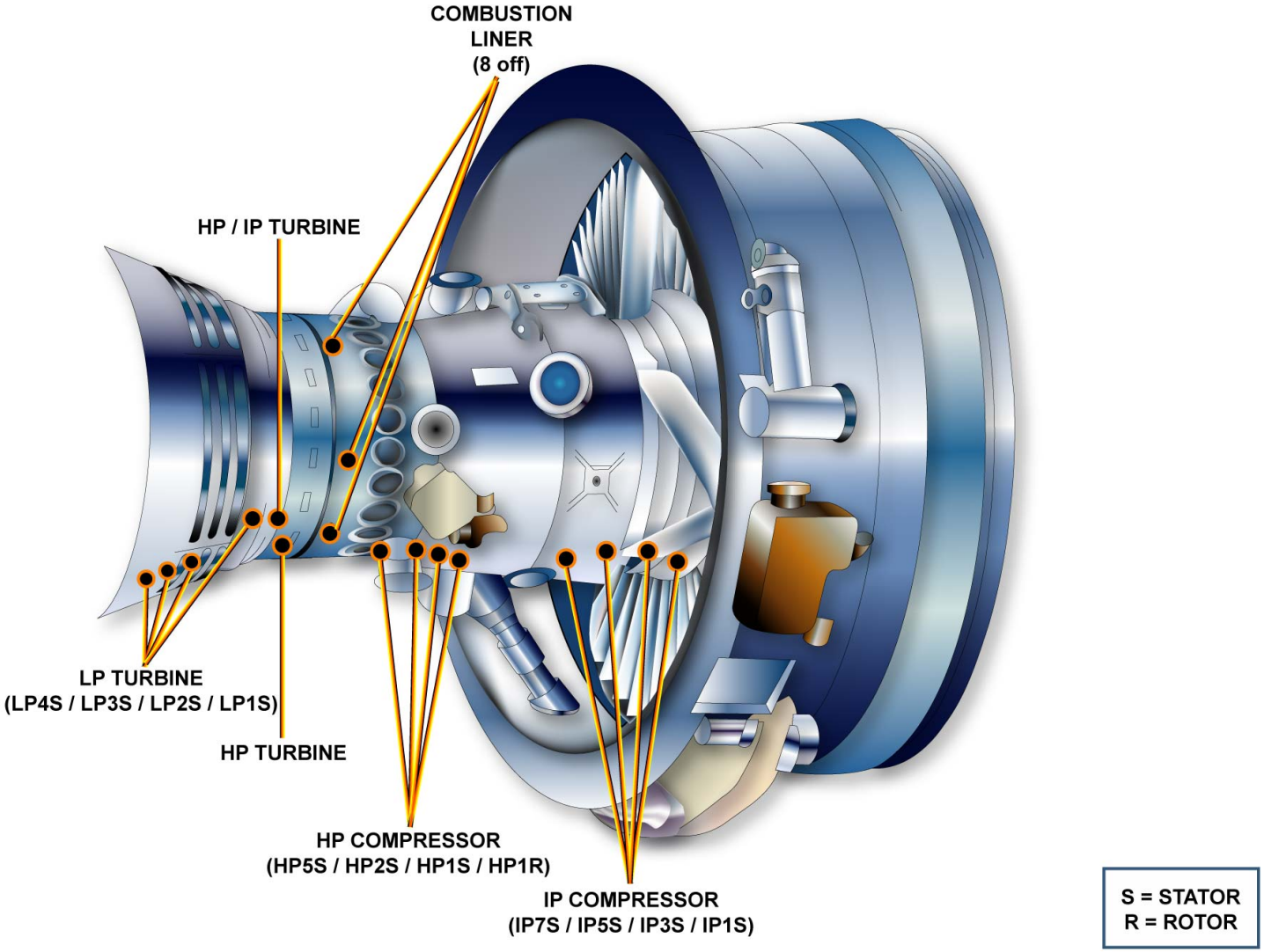

BORESCOPE ACCESS PORTS

G7508471 - G3NT1T0 - FM70D100000071

ENGINE FUEL SYSTEM D/O (3)

GENERAL

The engine fuel system is designed to supply metered fuel to the combustion chamber according to the engine power demand. The fuel system is also used to cool the engine oil and supply servo pressure to operate valves and actuators.
The Engine Electronic Controller (EEC) controls the operation of the engine fuel system. The EEC also monitors the system for normal operation and ECAM fuel flow indication.

G7508471 - G3NT1T0 - FM70D300000071

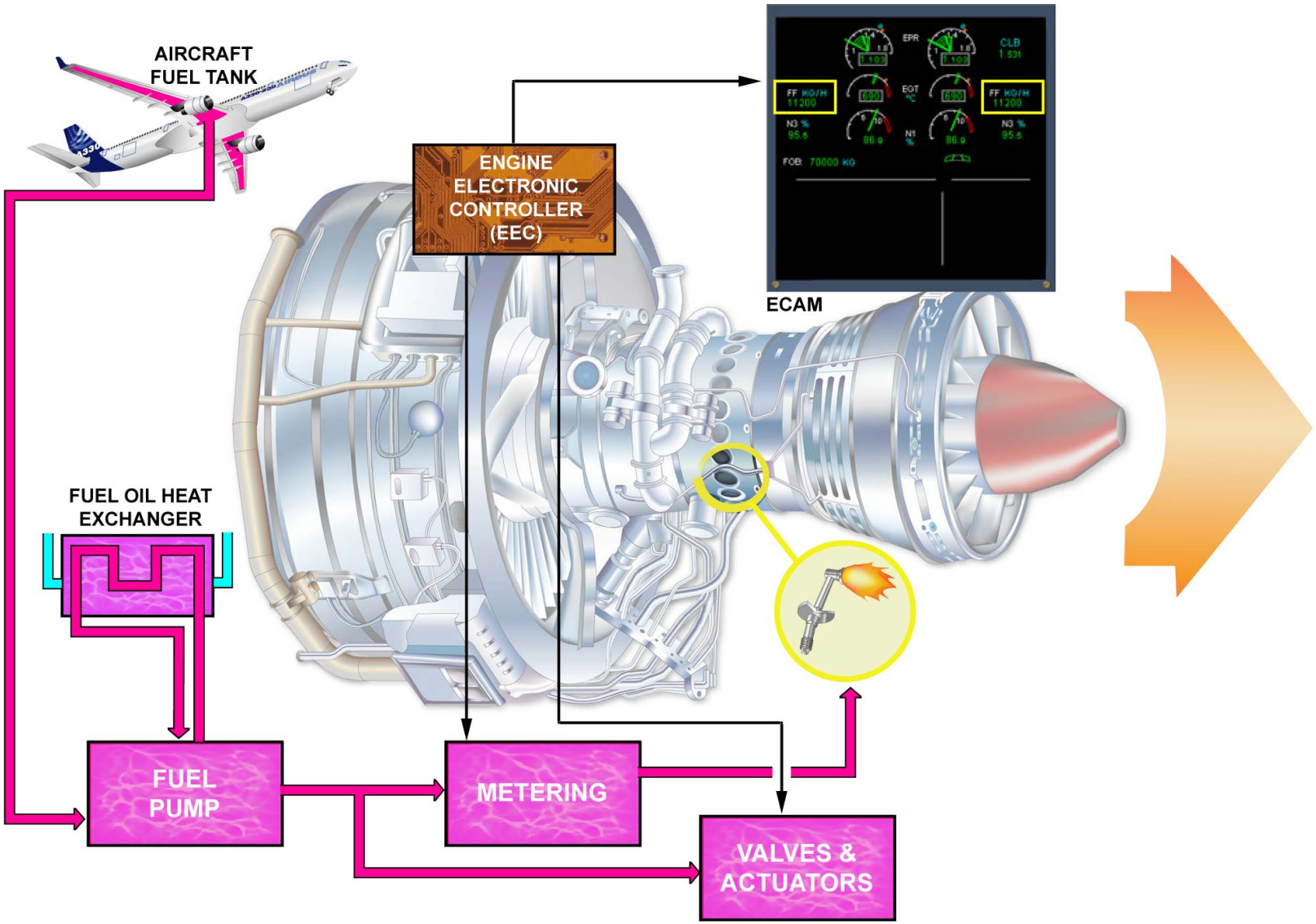
AIRCRAFT
FUEL TANK
ENGINE
ELECTRONIC
CONTROLLER
(EEC)
ECAM
FUEL OIL HEAT
EXCHANGER
FUEL
PUMP
METERING
VALVES &
ACTUATORS

GENERAL

ENGINE FUEL SYSTEM D/O (3)

GENERAL (continued)

LOW PRESSURE FUEL

The low pressure (LP) valve controls the fuel supply from the aircraft tanks to the engine fuel pump. The engine fuel pump includes an LP pump and an HP pump. Fuel from the tanks is initially supplied to the LP pump.
From the LP fuel pump fuel is supplied to the Fuel Oil Heat Exchanger (FOHE) for fuel heating and oil cooling.
Then the fuel goes through the LP fuel filter.

HIGH PRESSURE FUEL

The filtered LP fuel is returned to the high pressure (HP) fuel pump. The HP fuel pump pressurizes the fuel and supplies the Fuel Metering Unit (FMU), the Variable Stator Vane (VSV) actuators and the Air Oil Heat Exchanger (AOHE) modulating valve. The FMU, which contains servo valves, is mounted below the fuel pump assembly.
A metering valve in the FMU adjusts the fuel flow delivered to the combustion chamber. This fuel flow, from the FMU, successively goes through the fuel flow transmitter and the HP fuel filter before supplying the fuel manifolds and Fuel Spray Nozzles (FSNs).
A Pressure Raising and Shut-Off Valve (PRSOV), located inside the FMU downstream of the metering valve, starts or stops the fuel flow and maintains the fuel at a satisfactory pressure.
An overspeed valve in the FMU can close the PRSOV in case of N1, N2 or LP turbine overspeed.

CONTROL

Before engine start, the MASTER switch is OFF, the LP valve and the PRSOV are closed.
When the MASTER switch is set to ON, the LP valve opens and the PRSOV is controlled to open by the EEC.
The EEC controls the fuel flow through the metering valve in response to the throttle control lever demand or to the auto thrust system command.
Engine normal shut down is performed by setting the MASTER switch OFF which closes the LP valve and the PRSOV directly. The EEC can also close the PRSOV automatically in case of automatic start abort on ground.

MONITORING

For fuel system monitoring and ECAM indication, the EEC uses the following sensors:
- the fuel flow transmitter for fuel flow and fuel used indications,
- the LP fuel filter differential pressure switch for filter clogging indication,
- the fuel low pressure switch for fuel pressure monitoring.

To monitor the metering valve and the PRSOV positions, the EEC uses sensors inside the FMU.

G7508471 - G3NT1T0 - FM70D300000071

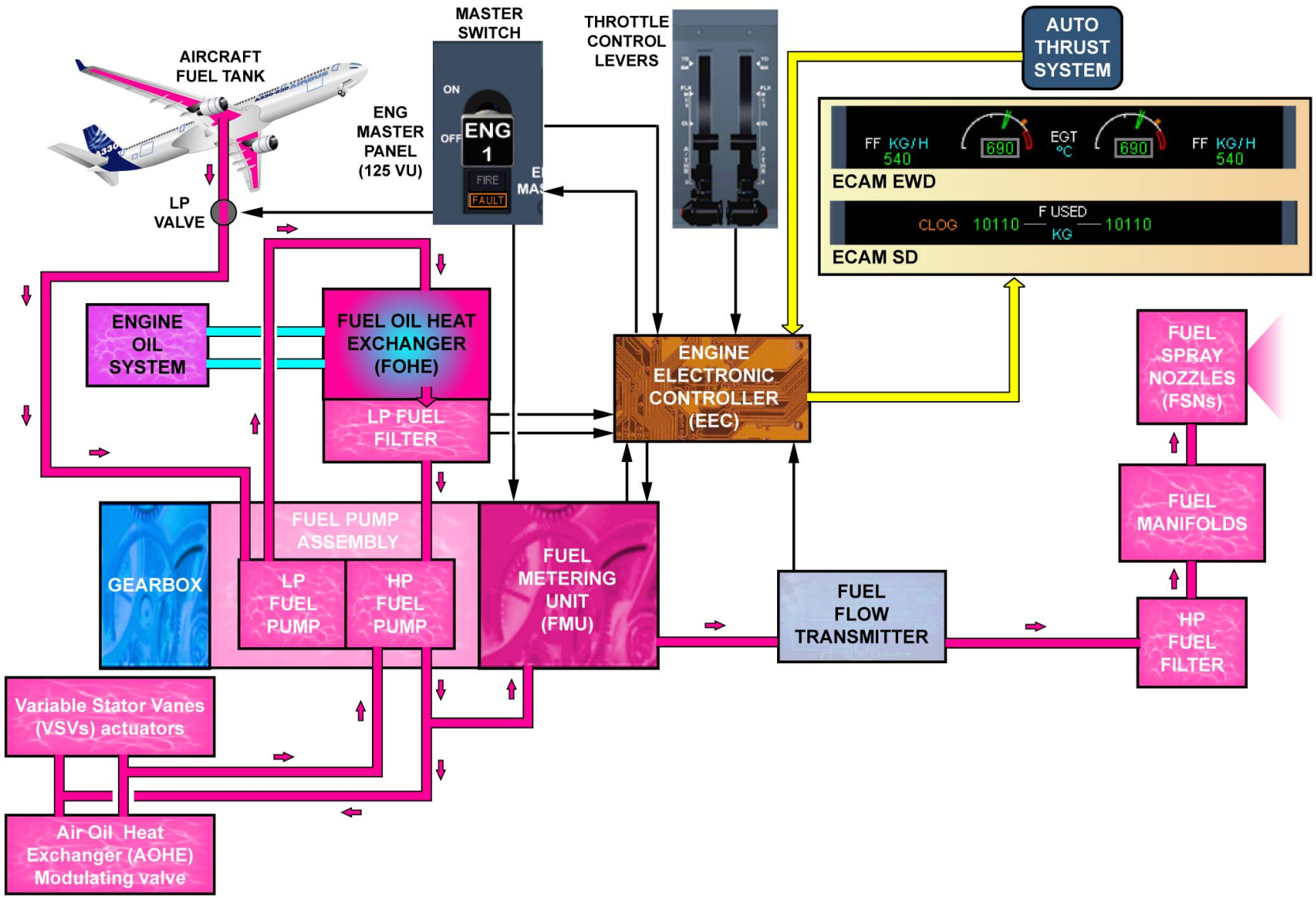

GENERAL - LOW PRESSURE FUEL ... MONITORING

G7508471 - G3NT1T0 - FM70D300000071

ENGINE FUEL SYSTEM D/O (3)

SYSTEM DESCRIPTION - FUEL PUMP ASSEMBLY

The engine fuel pump assembly is driven from the external gearbox and is mounted on the gearbox rear face at the RH side. This assembly includes an LP pump, an HP pump and an HP pump relief valve.

G7508471 - G3NT1T0 - FM70D300000071

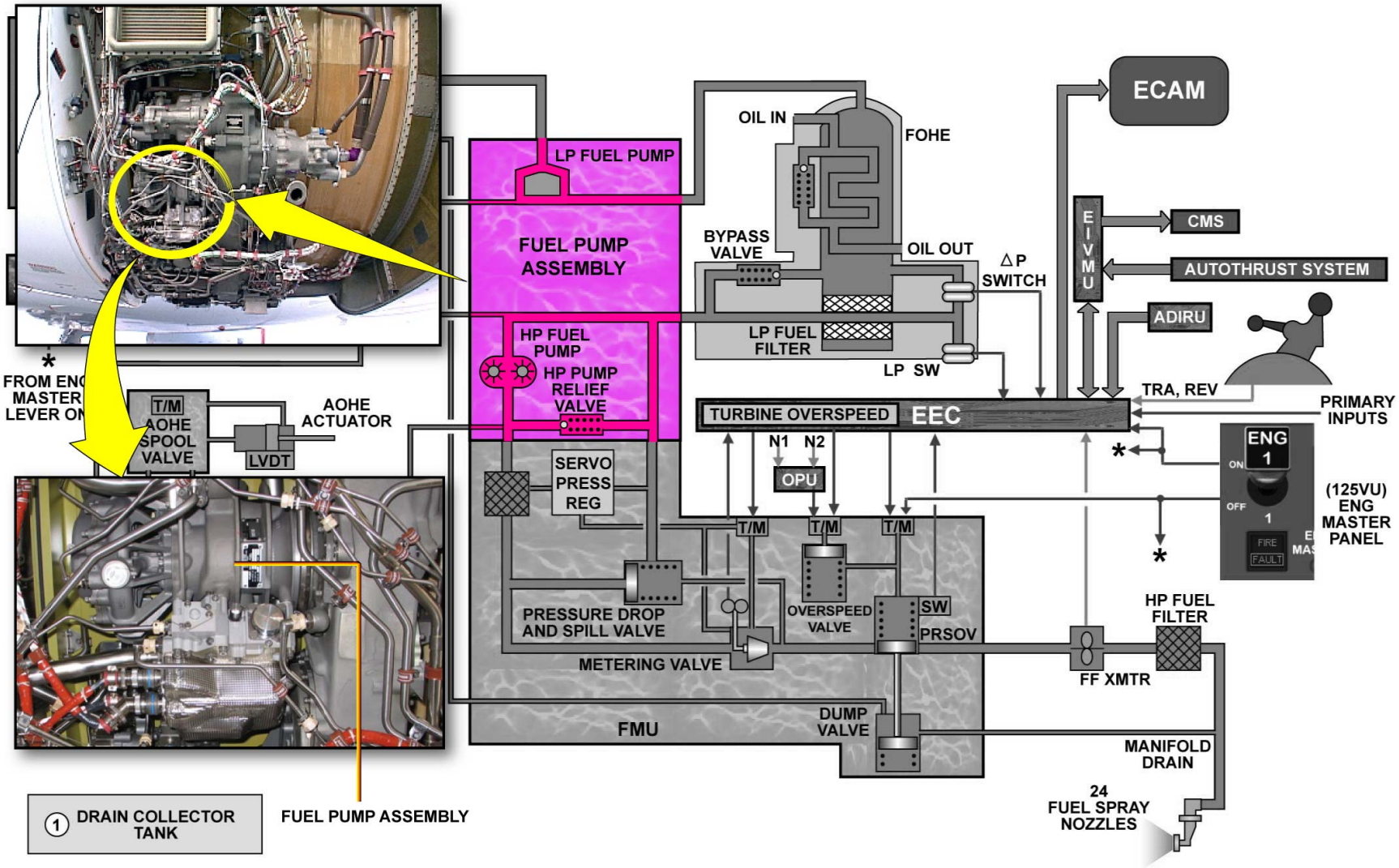

SYSTEM DESCRIPTION - FUEL PUMP ASSEMBLY

G7508471 - G3NT1T0 - FM70D300000071

ENGINE FUEL SYSTEM D/O (3)

SYSTEM DESCRIPTION - LOW PRESSURE FUEL FLOW

LP PUMP

The LP pump has a single-stage centrifugal impeller with an axial inducer. The fuel from the tanks is delivered to the LP pump under aircraft boost pump pressure and the LP pump increases that pressure before supplying fuel to the HP pump. The LP pump acts as a suction pump in case of a "gravity feed" situation (boost pumps failed).

FOHE

The FOHE and the LP fuel filter are included in the same assembly and are installed on the RH side of the LP compressor case.
The FOHE is installed in the upper part of the assembly. Its purpose is to both reduce the engine oil temperature and to prevent the icing of the moisture in the fuel.
The fuel enters the FOHE at the upper part, flows through the inner core via a cluster of tubes, then directly supplies the LP fuel filter.
The engine oil flows through the inner core via a stack of baffle plates.

LP FUEL FILTER

The LP fuel filter is installed in the lower part of the assembly. It is the primary filter in the distribution system. The filter element is disposable. A fuel drain plug is installed in the cap so that the case can be drained of fuel when the access to the filter is necessary.
The LP fuel filter includes a fuel by-pass valve, a differential pressure (P) switch and a fuel LP switch located downstream of the filter.

G7508471 - G3NT1T0 - FM70D300000071

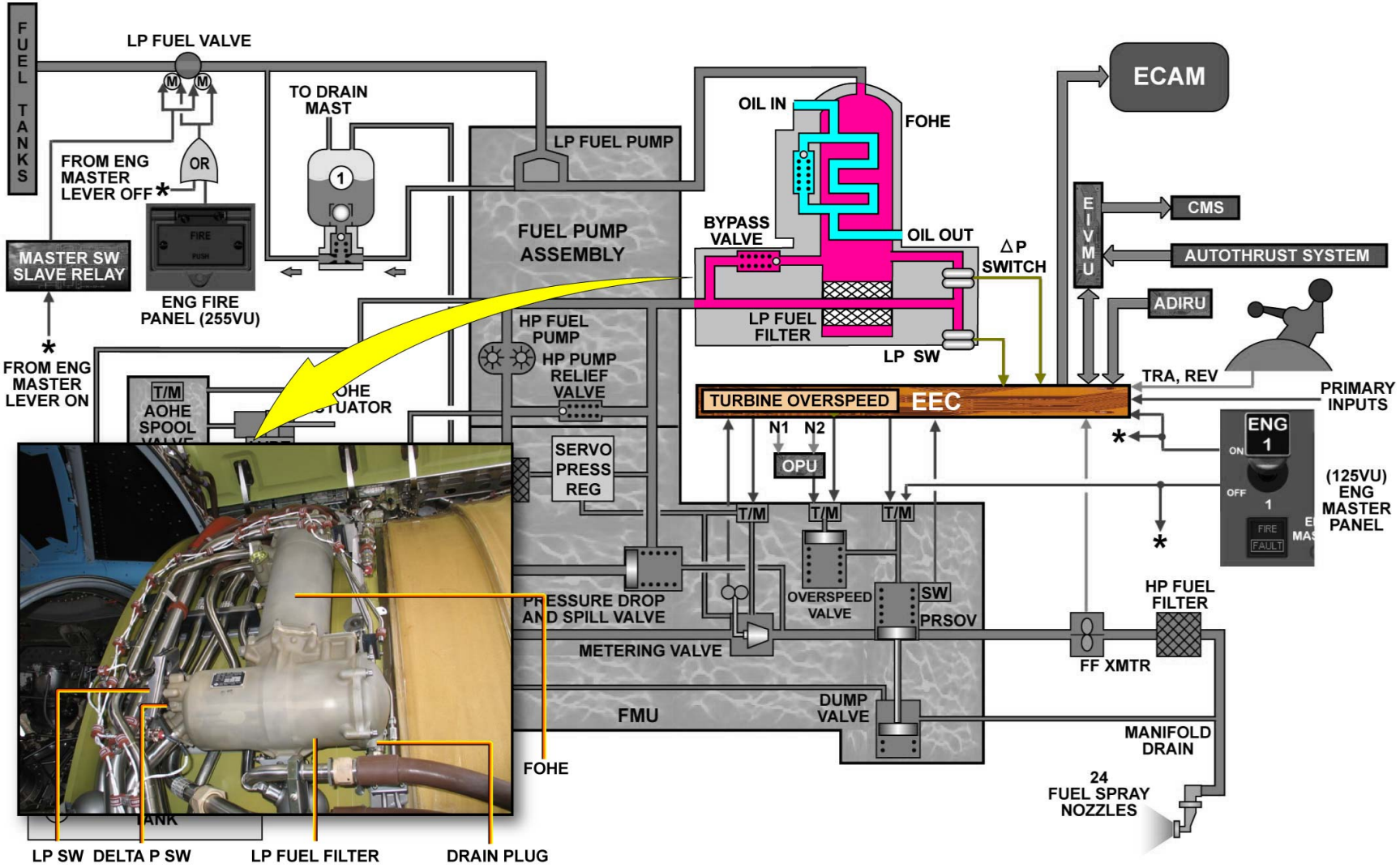

SYSTEM DESCRIPTION - LOW PRESSURE FUEL FLOW - LP PUMP ... LP FUEL FILTER

G7508471 - G3NT1T0 - FM70D300000071

ENGINE FUEL SYSTEM D/O (3)

SYSTEM DESCRIPTION - HIGH PRESSURE FUEL

HP PUMP

The HP pump is a gear-type pump and is protected against overpressure by a relief valve. The fuel from the FOHE and the LP fuel filter, is supplied to the HP pump.
The HP pump supplies the FMU with high pressure fuel. The HP pump also re-circulates the excess spill flow from the metering valve.

FUEL METERING UNIT - FMU

The FMU is attached to the lower surface of the fuel pump assembly and has two internal fuel connections, one for the HP supply and the other for fuel spill. The main function of the FMU is to supply metered fuel to the nozzles for combustion. The FMU is the Line Replaceable Unit but it contains several different components.
The FMU contains these components:
- the metering valve Torque Motor (TM),
- the fuel shut-off TM,
- the overspeed TM,
- the servo pressure regulator,
- fuel metering valve,
- PRSOV,
- the spill valve,
- the dump valve,
- the overspeed valve,
- PRSOV position microswitches,
- a metering valve position resolver.

The servo pressure regulator keeps the servo fuel pressure to the metering valve at a constant value more than LP return pressure. This is necessary for accurate control of the metering valve.

The metering valve controls the rate of fuel flow (FF) for all operating conditions. The metering valve is hydraulically actuated and controlled by the metering valve TM. Metering valve position feedback for the control loop is sent to both channels of the EEC by a position resolver.

The pressure drop and spill valve keeps a constant pressure difference across the metering valve. So it 'spills' excess HP supply to the inlet of the HP fuel pump. PRSOV is downstream of the metering valve.

The PRSOV is downstream of the metering valve. It maintains the metered fuel at a suitable pressure for operation, stops the fuel flow for engine shutdown and operates the dump valve.
The PRSOV is opened by fuel pressure from the metering valve when the shut-off TM is de-energized. The shut-off TM is controlled by the ENGINE MASTER switch. The shut-off TM is energized when the Master Switch is selected OFF. It may also be energized by the EEC in case of automatic start abort on the ground.

The dump valve lets most of the fuel in the fuel manifold drain into the drain collector tank at engine shutdown.

It is closed during engine operation and opens as the PRSOV closes.
The Overspeed Protection Unit (OPU) protects against N1 or N2 overspeed. If an overspeed condition is sensed, the OPU sends a signal to energize the overspeed TM. The overspeed valve then causes the PRSOV to close and shut down the engine.

G7508471 - G3NT1T0 - FM70D300000071

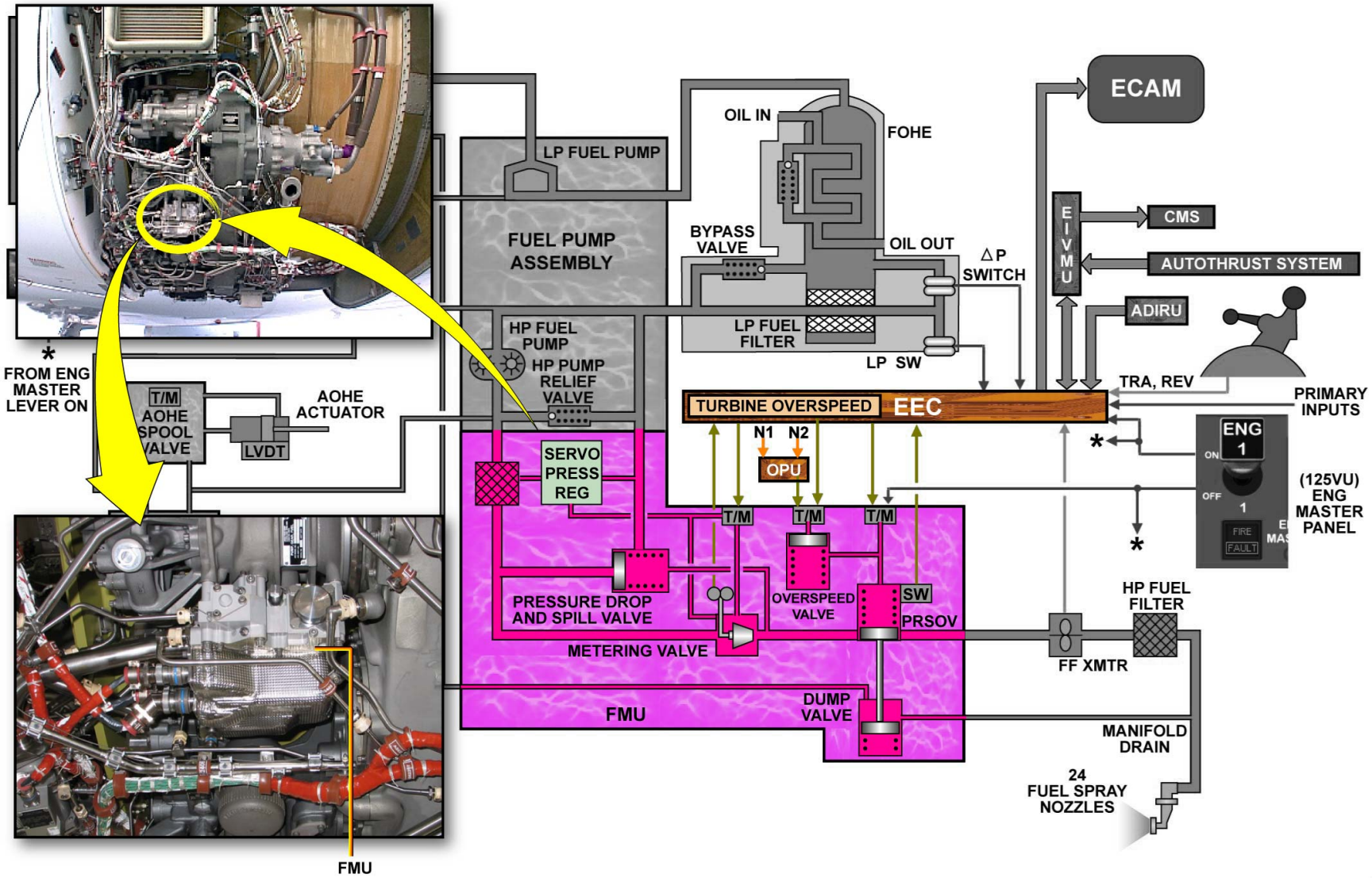

SYSTEM DESCRIPTION - HIGH PRESSURE FUEL - HP PUMP & FUEL METERING UNIT - FMU

G7508471 - G3NT1T0 - FM70D300000071

ENGINE FUEL SYSTEM D/O (3)

SYSTEM DESCRIPTION - METERED FUEL FLOW

After the FMU, the metered fuel flows through the fuel flow transmitter (FF XMTR) and the HP fuel filter before supplying the fuel manifold and 24 fuel spray nozzles.

FUEL FLOW TRANSMITTER

The fuel flow transmitter (FF XMTR) is installed on the rear LP compressor case at the bottom. It supplies electrical signals to the EEC which are in proportion to the FF supplied to the combustion system.
The EEC uses these signals to compute the fuel flow and the fuel used. The FF is shown on the EWD and the fuel used on the SD ENGINE and CRUISE pages.

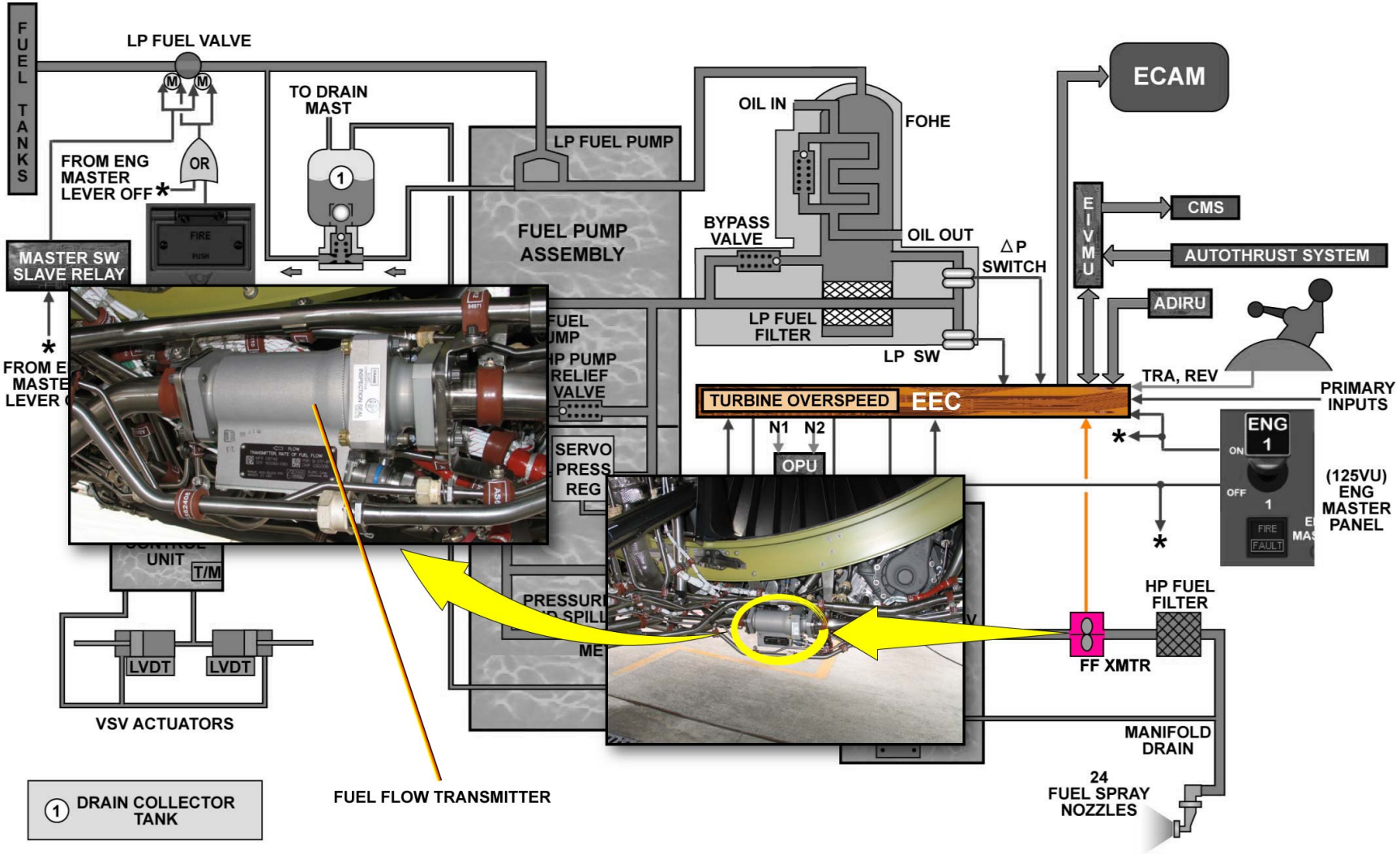

SYSTEM DESCRIPTION - METERED FUEL FLOW - FUEL FLOW TRANSMITTER

G7508471 - G3NT1T0 - FM70D300000071

ENGINE FUEL SYSTEM D/O (3)

SYSTEM DESCRIPTION - METERED FUEL FLOW (continued)

HP FUEL FILTER

The HP fuel filter element can be cleaned of contamination and, if serviceable, can be used again.

G7508471 - G3NT1T0 - FM70D300000071

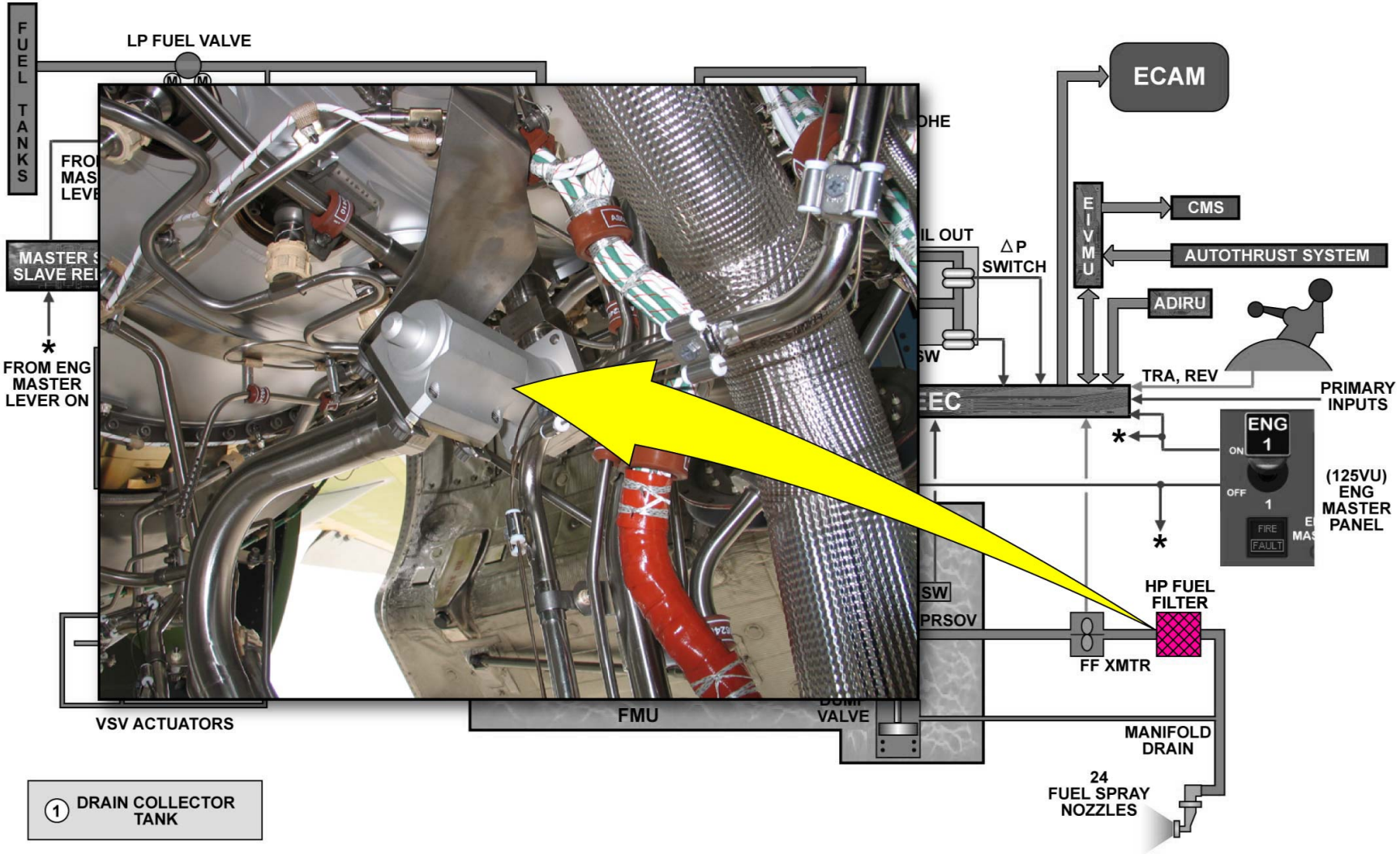

SYSTEM DESCRIPTION - METERED FUEL FLOW - HP FUEL FILTER

ENGINE FUEL SYSTEM D/O (3)

SYSTEM DESCRIPTION - METERED FUEL FLOW (continued)

FUEL MANIFOLD

The fuel manifold assembly equally supplies all 24 fuel spray nozzles. The manifold is split into 2 halves, each feeding 6 supply tubes. The 2 halves can be disconnected near the top and the bottom of the engine. Each supply tube is connected to an adjacent pair of fuel spray nozzles.

G7508471 - G3NT1T0 - FM70D300000071

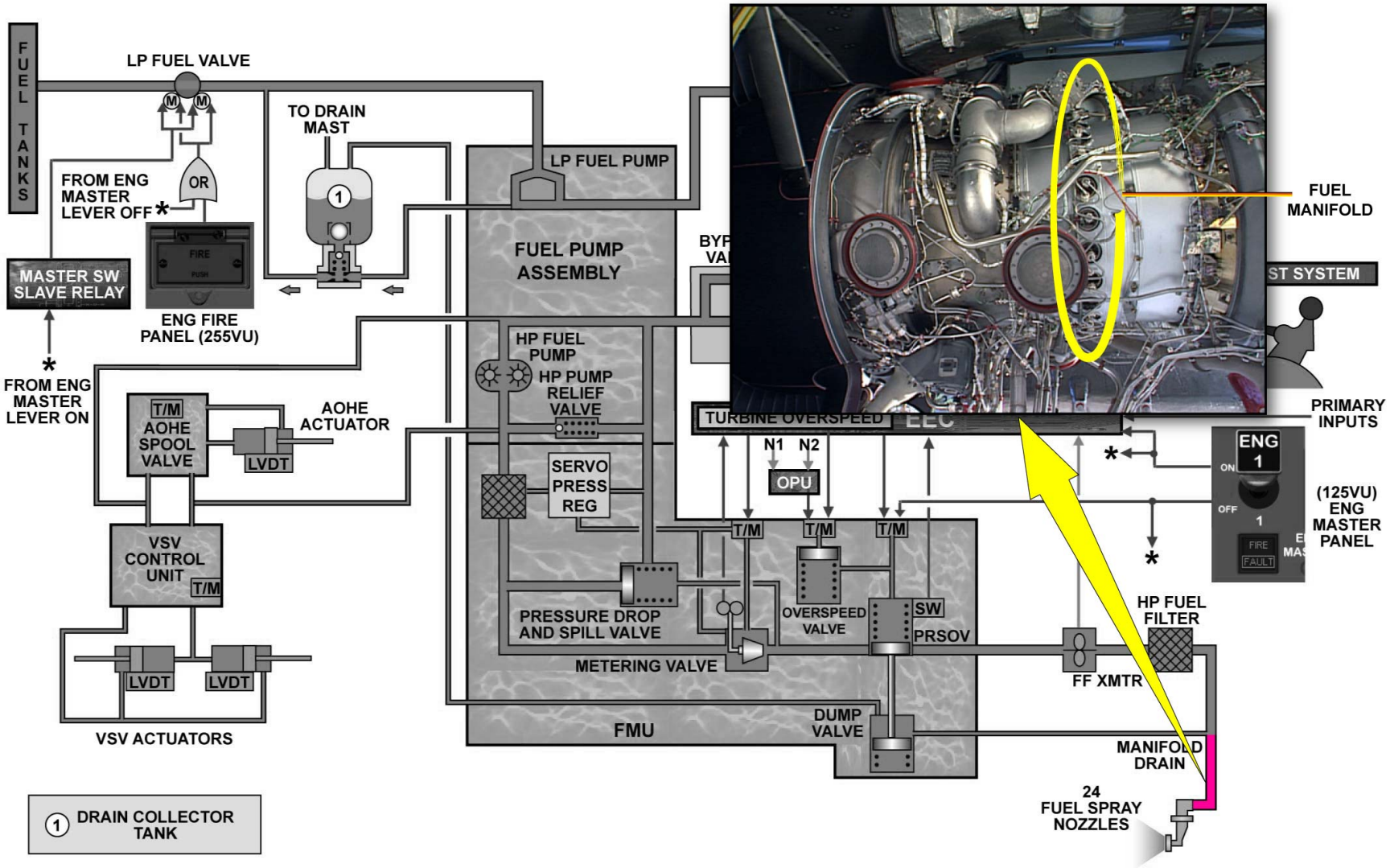

SYSTEM DESCRIPTION - METERED FUEL FLOW - FUEL MANIFOLD

G7508471 - G3NT1T0 - FM70D300000071

ENGINE FUEL SYSTEM D/O (3)

SYSTEM DESCRIPTION - METERED FUEL FLOW (continued)

FUEL SPRAY NOZZLES

The 24 fuel spray nozzles are installed at equal distance around the combustion outer case. There are 12 LH and 12 RH nozzles grouped in adjacent pairs to suit the supply tubes.
The fuel spray nozzles are air-spray type. Each one has a distributor weight assembly to equalize the fuel flow at each nozzle during low flow rates.

G7508471 - G3NT1T0 - FM70D300000071

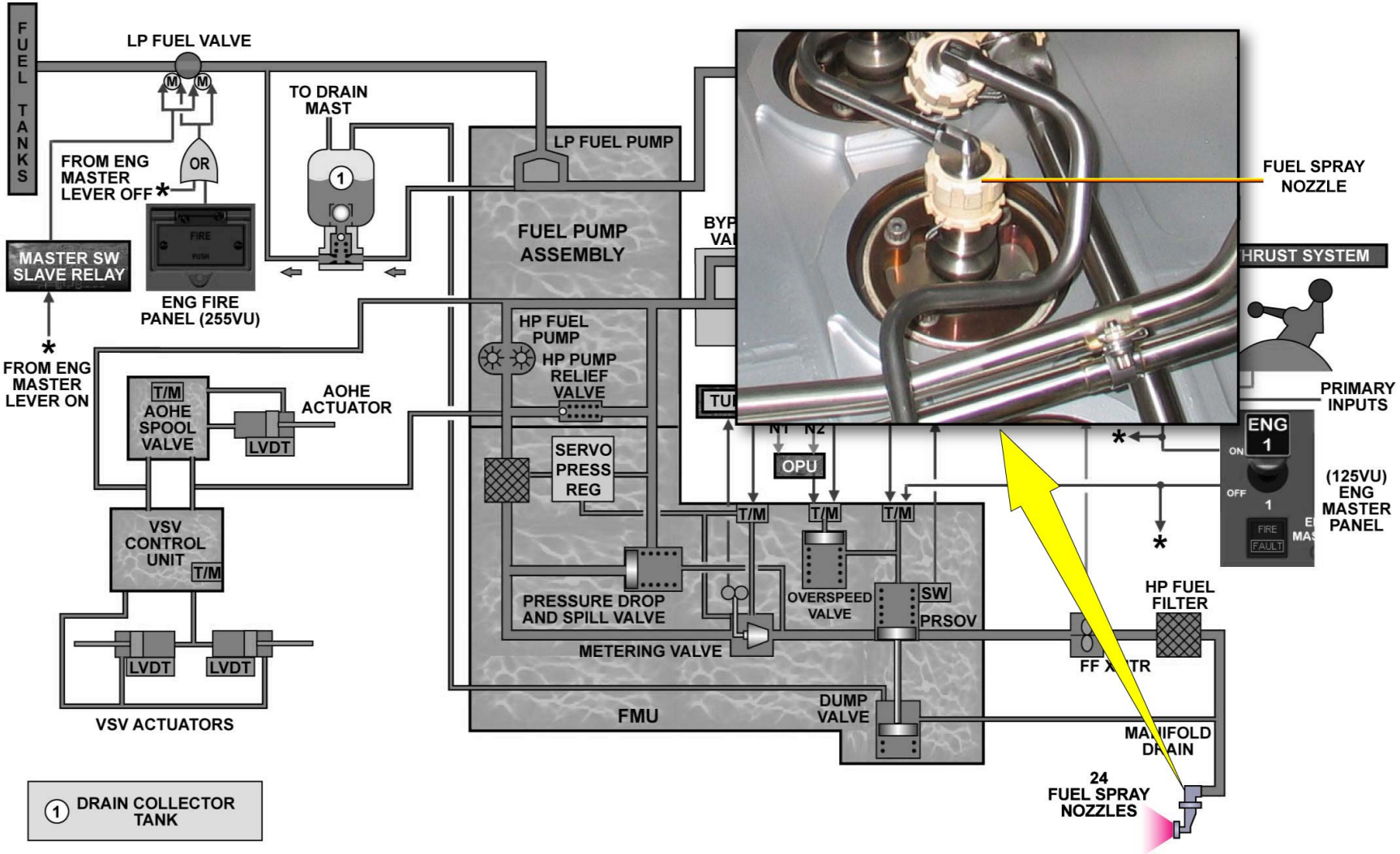

SYSTEM DESCRIPTION - METERED FUEL FLOW - FUEL SPRAY NOZZLES

G7508471 - G3NT1T0 - FM70D300000071

ENGINE FUEL SYSTEM D/O (3)

SYSTEM DESCRIPTION - METERED FUEL FLOW (continued)

DRAIN TANK

When the engine is shut down or after a failure to start, the fuel is drained from the manifold to the drain tank via the dump valve in the FMU. If, after a number of failed starts, the drain tank becomes full, the excess fuel is discharged through the drain mast.
At engine start the LP fuel flows through the drain tank ejector pump, this causes a suction which opens the non-return valve and drains the fuel from the drain tank. It then becomes part of the supply to the LP pump inlet.

G7508471 - G3NT1T0 - FM70D300000071

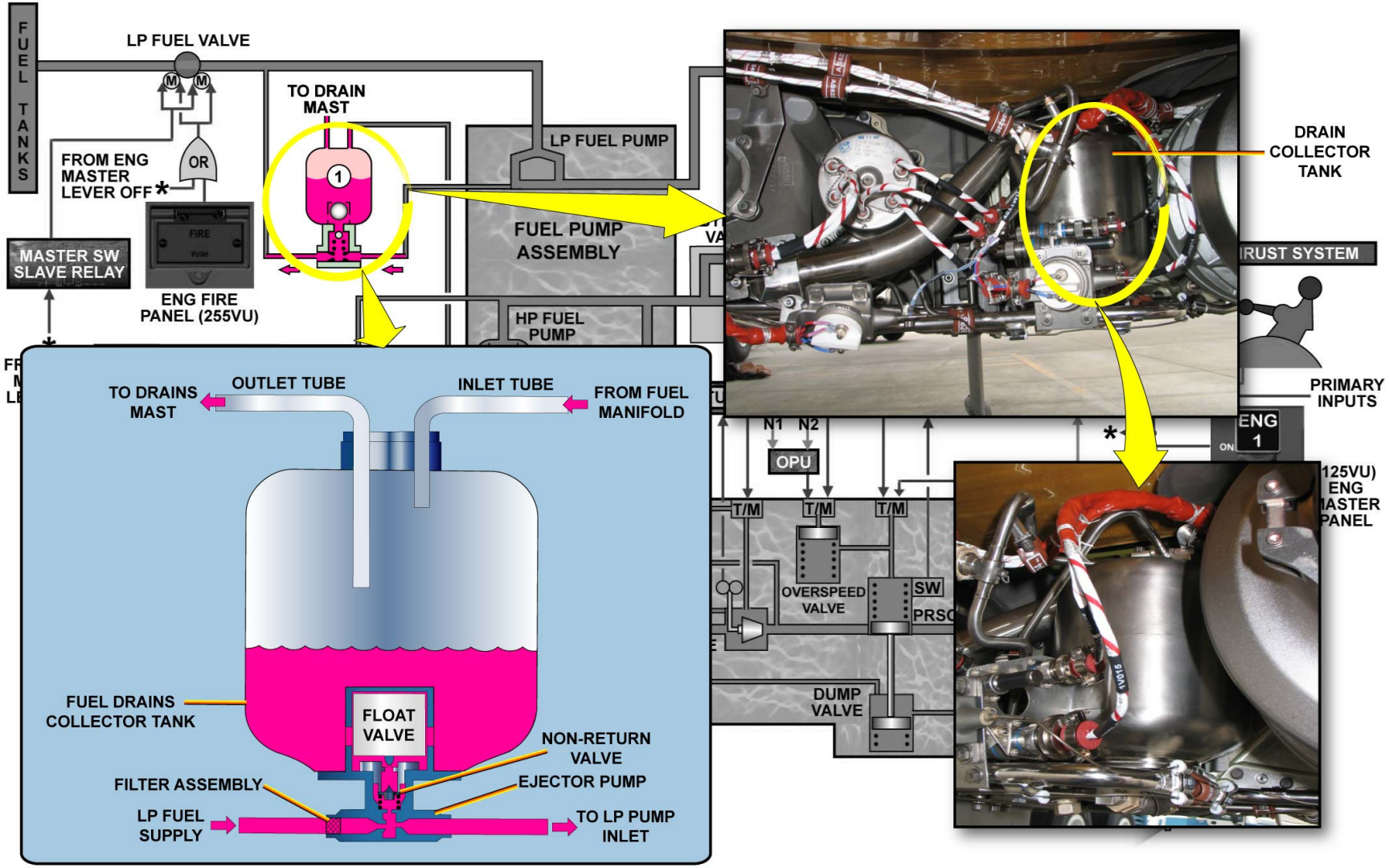

SYSTEM DESCRIPTION - METERED FUEL FLOW - DRAIN TANK

ENGINE FUEL SYSTEM D/O (3)

GENERAL OPERATION

STARTING AND THRUST CONTROL

During engine start, when the ENGine MASTER switch is selected ON, the LP fuel valve is commanded open via the master switch slave relay. At this time, the springs and shut-off valve servo pressure keep the PRSOV closed.

The EEC manages the engine thrust by controlling the metering valve position via the electrical current supplied to the metering valve TM. The metering valve position is a function of the throttle control lever position or Throttle Resolver Angle (TRA) in manual thrust or a thrust command from the Autothrust System in automatic thrust control.

The thrust command signal is routed through the Engine Interface and Vibration Monitoring Unit (EIVMU).

As the metering valve opens, the metered fuel pressure increases and becomes greater than the PRSOV spring tension and opens the valve. Metered fuel is then supplied to the fuel spray nozzles through the fuel flow transmitter and the HP fuel filter.

Two microswitches give the position of the PRSOV to the EEC.

G7508471 - G3NT1T0 - FM70D300000071

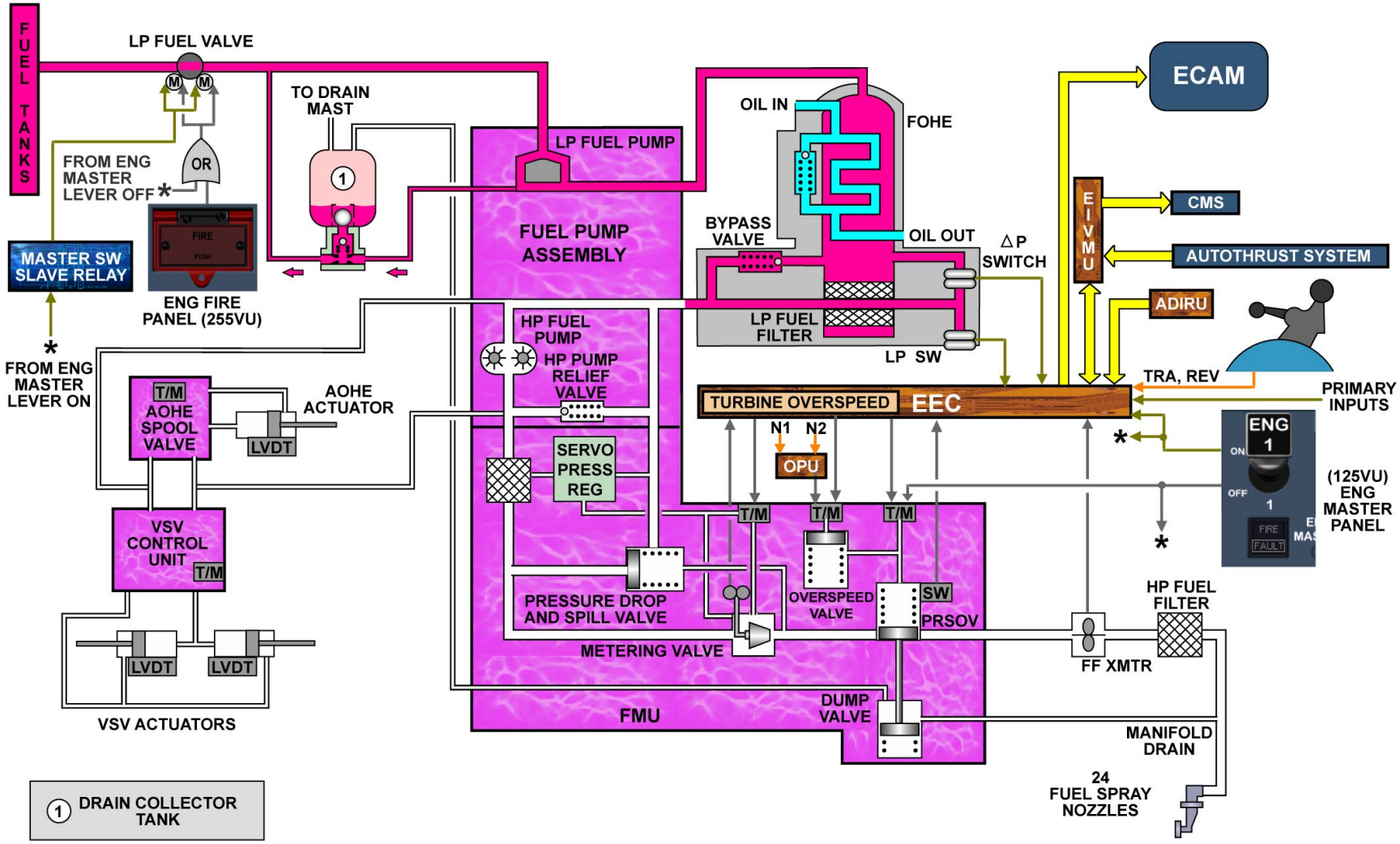

GENERAL OPERATION - STARTING AND THRUST CONTROL

G7508471 - G3NT1T0 - FM70D300000071

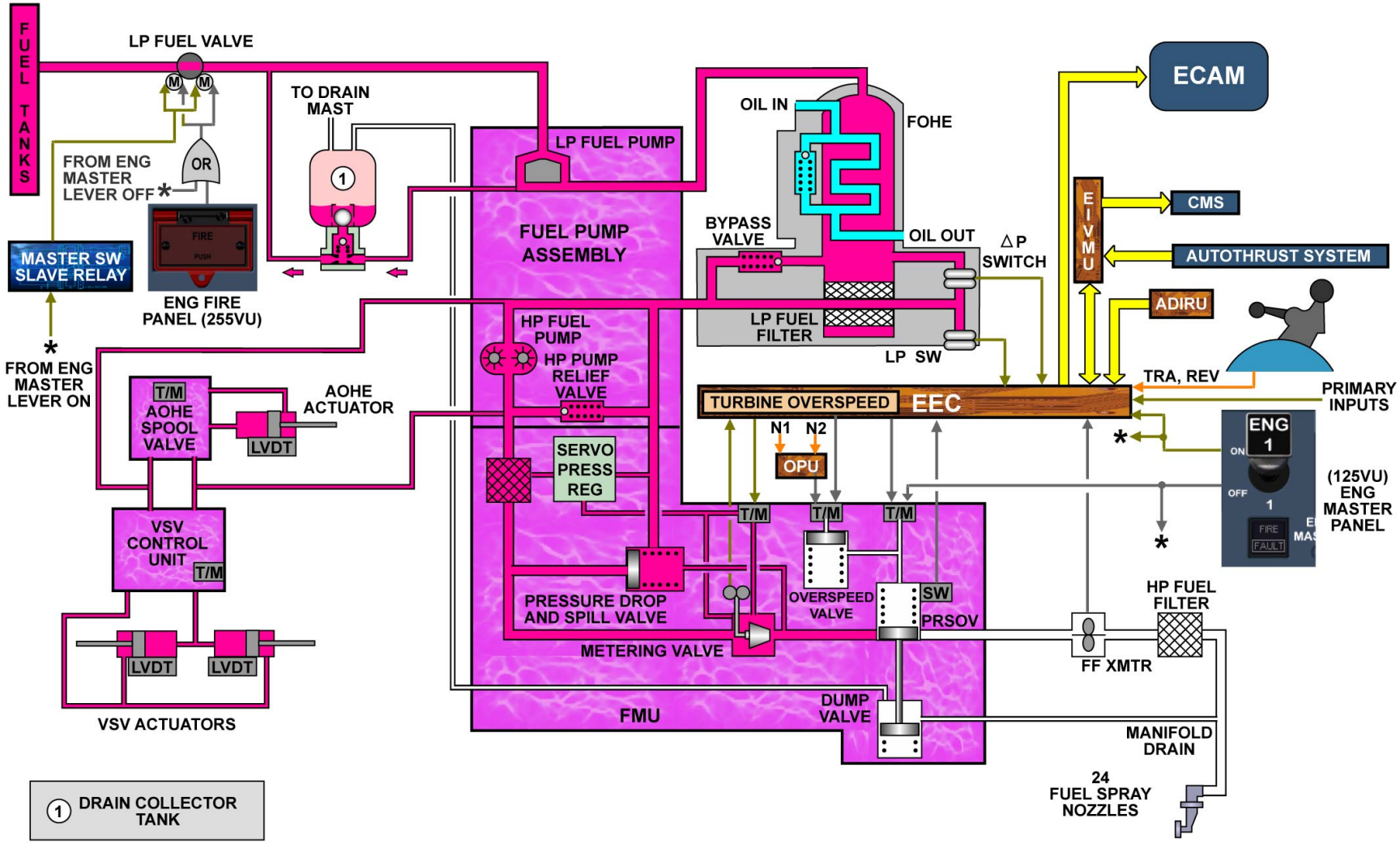

GENERAL OPERATION - STARTING AND THRUST CONTROL

G7508471 - G3NT1T0 - FM70D300000071

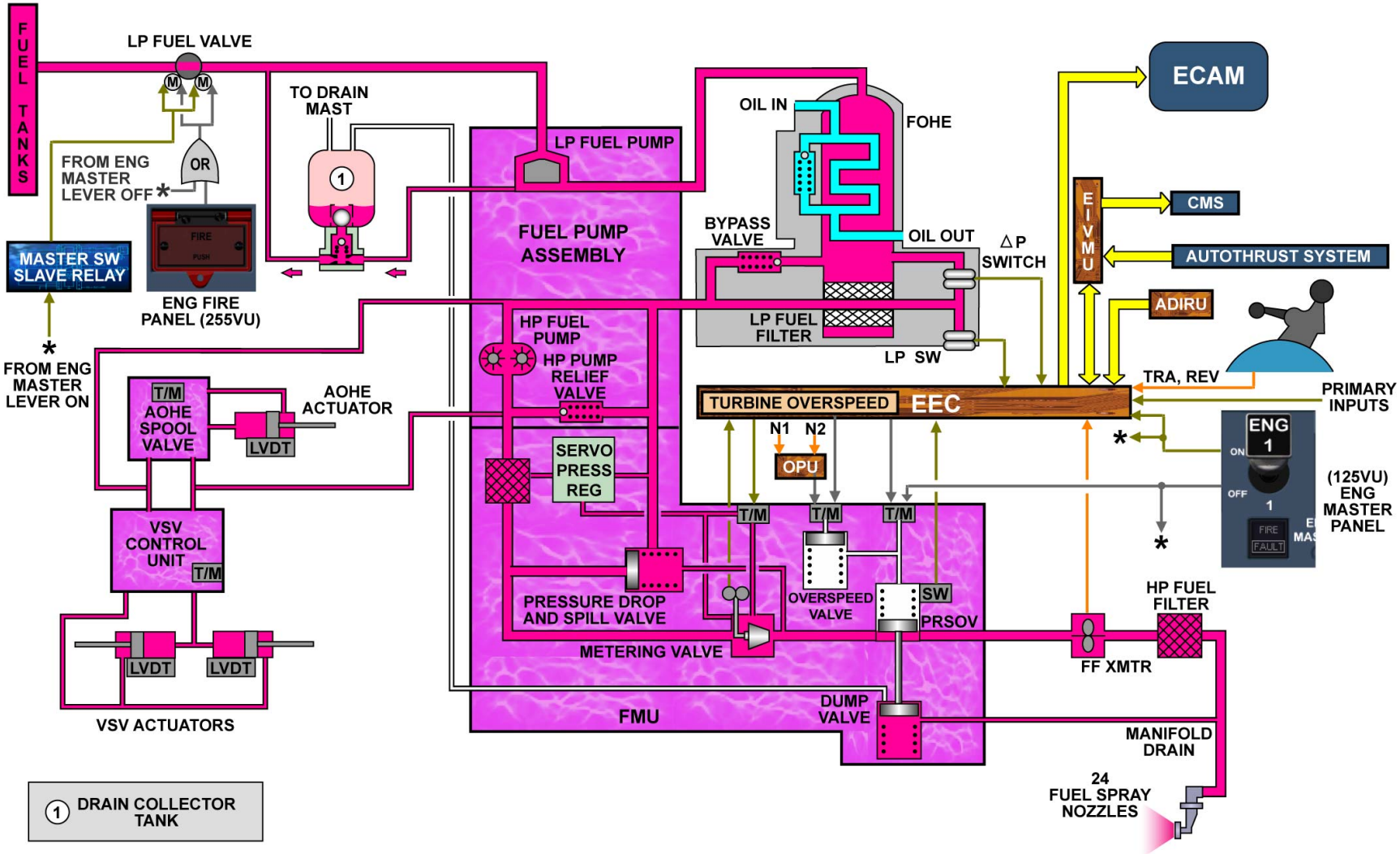

GENERAL OPERATION - STARTING AND THRUST CONTROL

G7508471 - G3NT1T0 - FM70D300000071

ENGINE FUEL SYSTEM D/O (3)

GENERAL OPERATION (continued)

SHUTDOWN

During a normal engine shut down, when the ENGine MASTER switch is selected OFF, the fuel shut-off TM is directly controlled to close the PRSOV. This command overrides any EEC command to make sure that the operator always has the option to shut down the engine for any reason. The LP fuel valve also closes when the Master switch is selected OFF. The PRSOV is closed hydraulically by the shut-off servo pressure assisted by the spring force. When the PRSOV closes, the dump valve opens and the fuel is drained to the drain tank. The ENGine FIRE P/B also controls the LP fuel valve to the closed position in order to isolate the engine from the fuel tanks.
The EEC receives a closed position signal from the PRSOV microswitches.

G7508471 - G3NT1T0 - FM70D300000071

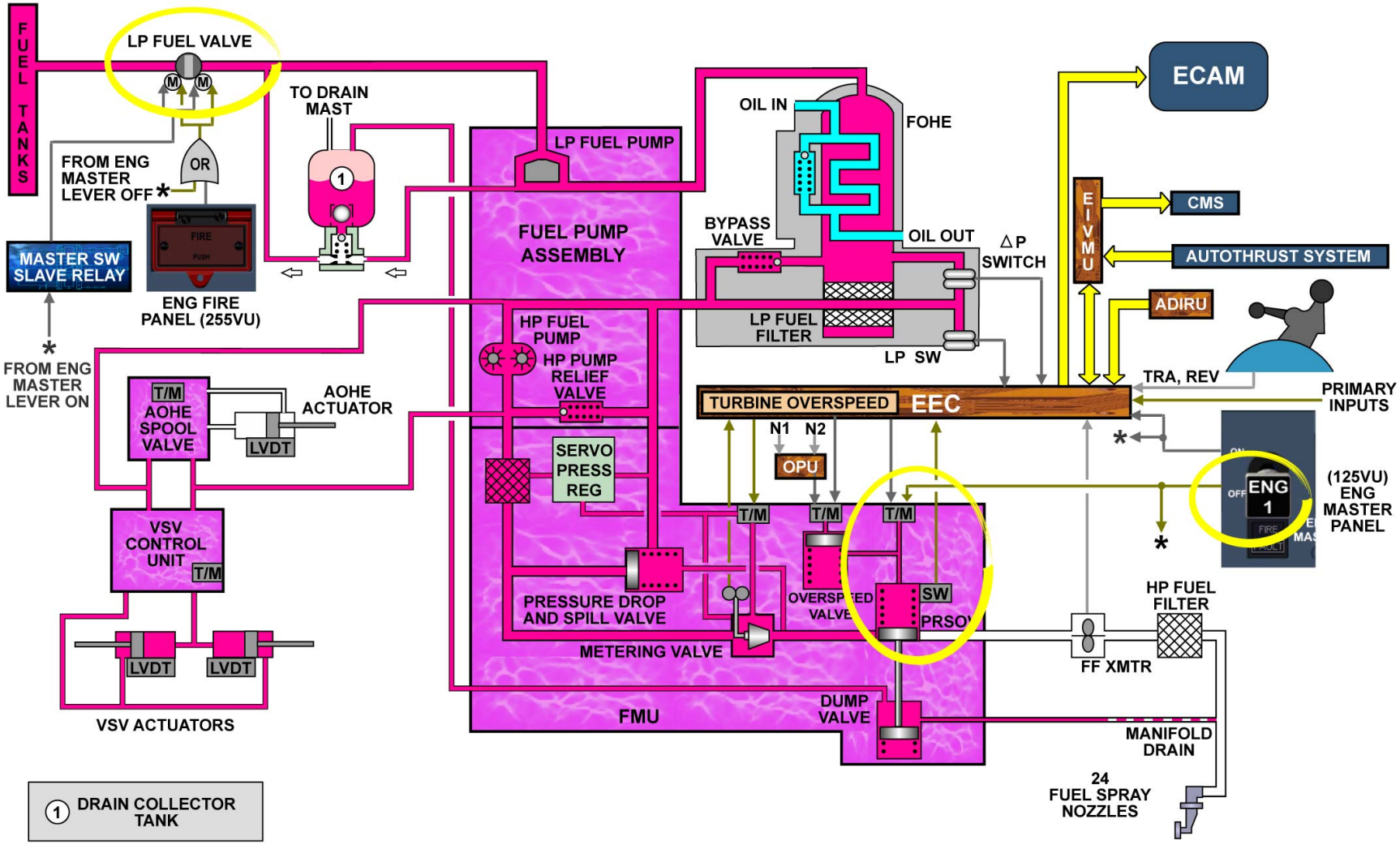

GENERAL OPERATION - SHUTDOWN

G7508471 - G3NT1T0 - FM70D300000071

ENGINE FUEL SYSTEM D/O (3)

GENERAL OPERATION (continued)

MONITORING

Impending fuel filter clogging is detected by the fuel filter differential pressure switch (P) which sends a signal to the EEC. In the cockpit, an ECAM warning "ENG FUEL FILTER CLOG" is shown on the EWD and an amber "CLOG" indication appears close to the FUEL USED indication on the SD ENGINE page.
A fuel low pressure switch monitors the fuel pressure downstream of the LP fuel filter. The switch detects low fuel pressure and sends a signal to the EEC that will trigger corresponding class 2 fault message.
. The oil temperature is used by the EEC as primary control parameter to control the AOHE Modulating Valve.

G7508471 - G3NT1T0 - FM70D300000071

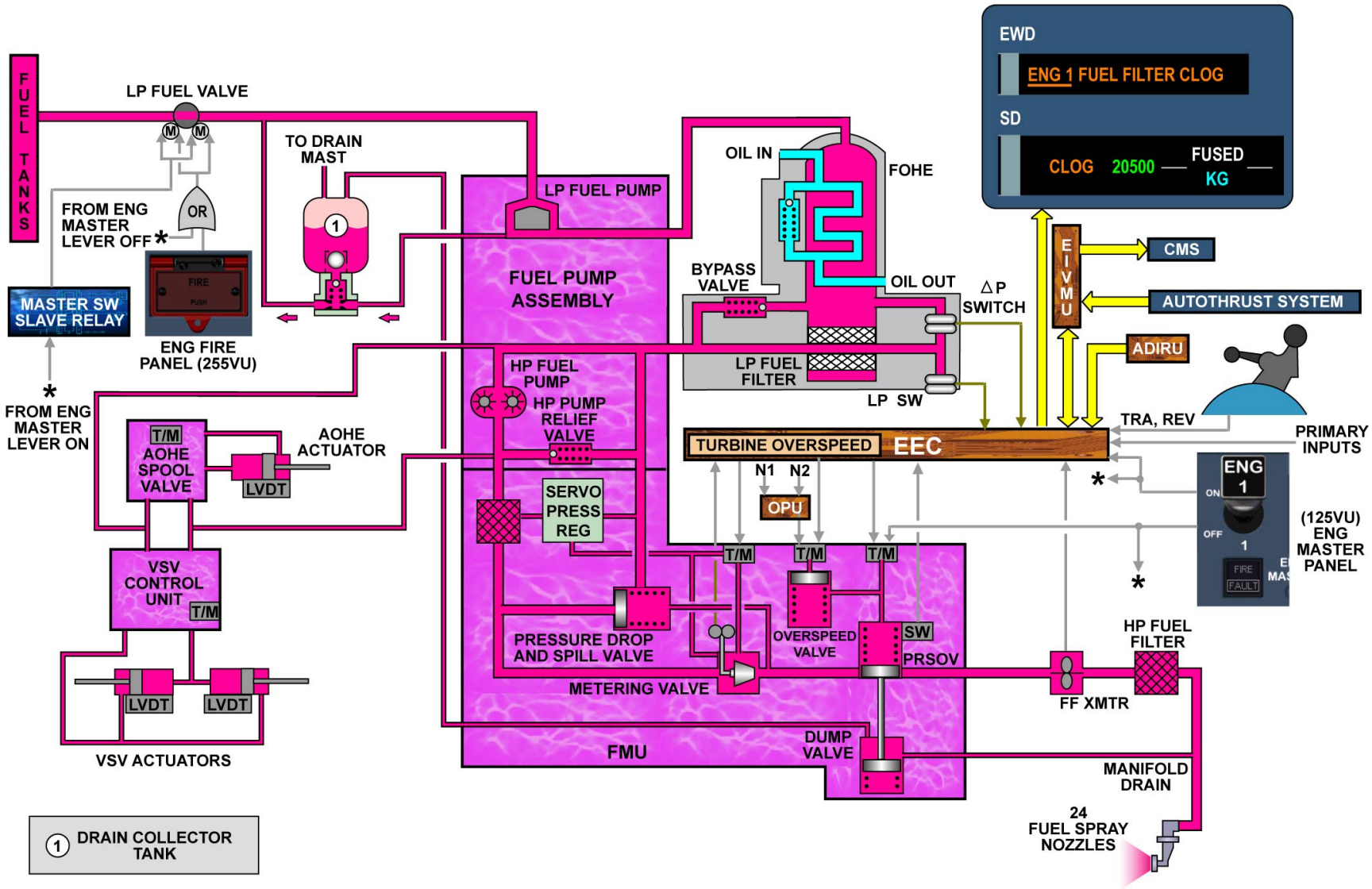

GENERAL OPERATION - MONITORING

G7508471 - G3NT1T0 - FM70D300000071

ENGINE LIMIT PROTECTION D/O (3)

GENERAL

Based on engine parameters, the Engine Electronic Controller (EEC) ensures limit protection for:
- N1, N2 and N3 shaft speeds,
- Exhaust Gas Temperature (EGT) during ground automatic start sequence.

In the event of severe LP or IP shaft overspeed, resulting from an EEC malscheduling of the fuel flow and/or Variable Stator Vanes (VSVs), the Rotor Overspeed protection System (ROS) is designed to automatically shut down the engine. The ROS is an independent system to EEC.
In the unlikely event of a LP turbine shaft breakage, the LP Turbine Overspeed protection System (LPTOS) is designed to automatically shut down the engine. The LPTOS is an independent system to EEC, even if physically located in EEC (channel A part).
The IP turbine is protected against overspeed and overheat by monitoring of the turbine cooling air temperature.

G7508471 - G3NT1T0 - FM70DB000000071

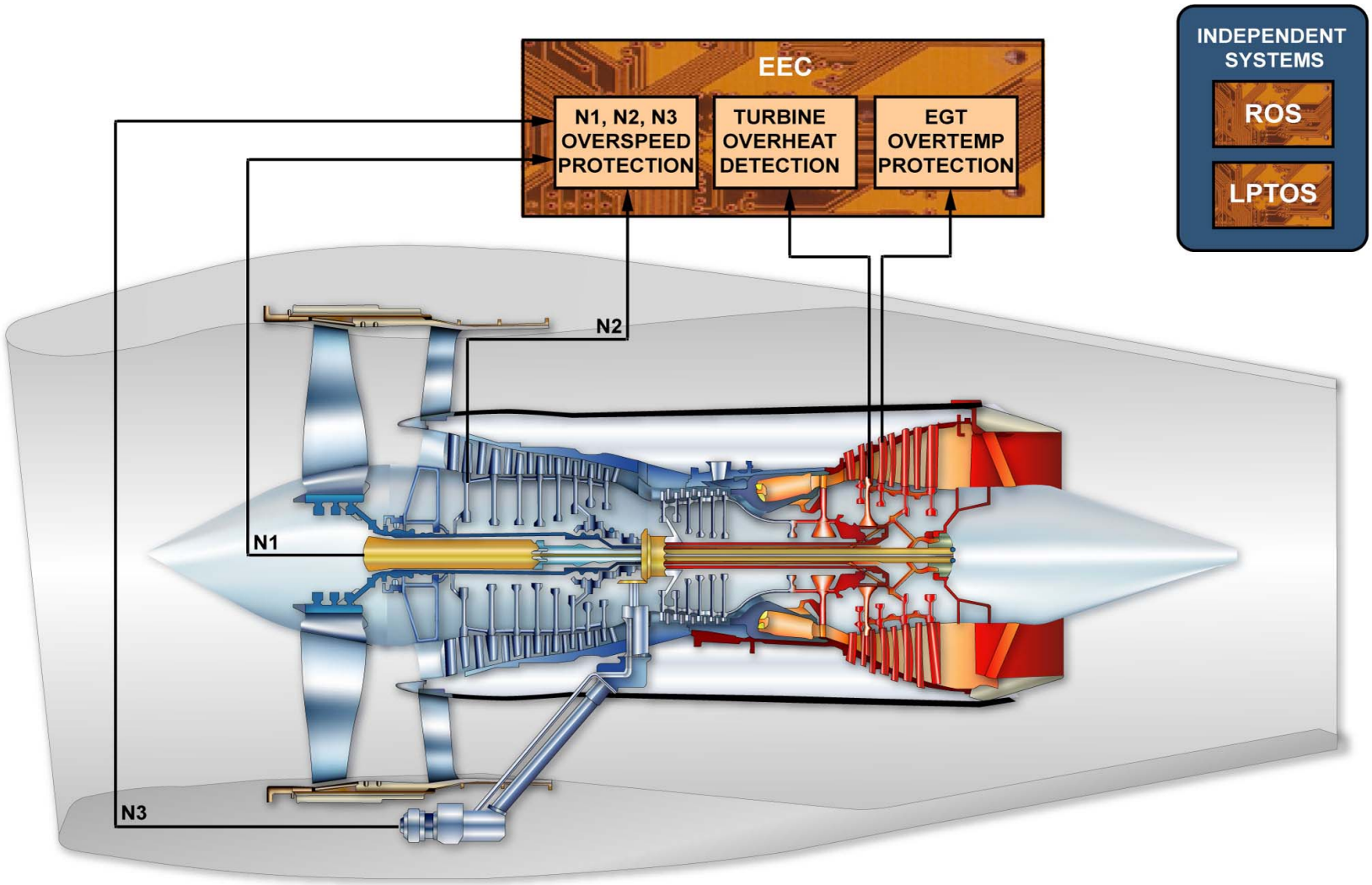
EEC
N1, N2, N3 OVERSPEED PROTECTION
TURBINE OVERHEAT DETECTION
EGT OVERTEMP PROTECTION
INDEPENDENT SYSTEMS
ROS
LPTOS
N2
N1
N3

GENERAL

ENGINE LIMIT PROTECTION D/O (3)

OVERSPEED PROTECTION SYSTEM

The Overspeed Protection System (OPS) protects the ROS and LPTOS.
The ROS protection is done by the Overspeed Protection Unit (OPU), which also ensures the selection of the corresponding compressor speed probes.
The LPTOS protection is done by a dedicated circuit board located in the EEC channel A part.

SPEED PROBE INSTALLATION

There are three measuring stations corresponding to the measurement of:
- the LP Compressor speed, or N1C,
- the IP Compressor speed, or N2,
- the LP Turbine speed, or N1T.

The measuring stations dedicated to N1C and N2 are installed in the front bearing housing. The measuring station dedicated to N1T is installed in the tail bearing housing.
Each measuring station is composed of a phonic wheel and three inductive speed probes.
The LP compressor and IP compressor speed probes outputs (N1C and N2) are sent to the OPU.
The LP turbine speed probes outputs are sent to the independent LPTOS circuit board of the EEC.

COMPRESSOR SPEED PROBE SELECTION

The OPU has two channels:
- a N1 function channel which receives inputs from three N1C speed probes,
- a N2 function channel which receives inputs from three N2 speed probes.

Each OPU channel selects two valid signals out of the three signals received from N1C or N2 speed probes. The N1C and N2 speed signals are then sent to both EEC channels for N1 and N2 monitoring and indicating.
The third speed signal is only selected, as a spare signal, if a fault is detected with one of the speed probe signals initially selected.
The N1C signals are also used by the LPTOS circuit board of the EEC for turbine overspeed detection.

ROTOR OVERSPEED DETECTION

In each OPU channel, the N1C or N2 selected signals are used for overspeed detection logics.
Each OPU channel changes its N1C or N2 analog signal inputs to digital signals. These signals are then monitored by the overspeed detection logic circuit.
In case of N1 or N2 severe overspeed detection, the corresponding OPU channel sends an electrical signal to the Overspeed Valve Torque Motor (TM) in the Fuel Metering Unit (FMU). The Overspeed Valve then closes the Pressure Raising and Shut Off Valve (PRSOV) to cut off the fuel supply from the FMU and thus to shut down the engine, independently of the normal shutdown control.

LP TURBINE OVERSPEED DETECTION

The independent LPTOS circuit board is installed in EEC channel A part. This circuit board has two overspeed logic circuits for LP turbine overspeed detection.
The LPTOS circuit board receives the N1C signals from the OPU. One N1C signal is supplied to each logic circuit of the LPTOS.
Three N1T signals are sent to the LPTOS circuit board directly from the corresponding speed probes. Each logic circuit of the LPTOS is supplied with one N1T signal. The third signal is only selected, as a spare signal, if a fault is detected with one of the speed probe signals initially selected.
Each logic circuit continuously compares its LP turbine speed input with its LP compressor speed input.

G7508471 - G3NT1T0 - FM70DB00000071

If the two logic circuits detect a specified speed difference between the LP turbine and LP compressor (in a specified time limit), a LP shaft breakage is diagnosed. In that case, the system immediately sends an electrical signal to the Overspeed Valve TM in the FMU. The Overspeed Valve then closes the PRSOV to cut off the fuel supply from the FMU and thus to shut down the engine, independently of the normal shutdown control.
If one logic circuit (A or B) becomes defective, the LPTOS circuits are disarmed to prevent any incorrect operation of the system.

OVERSPEED SYSTEM AUTO TEST

The EEC does an automatic test of the LPTOS protection during every ground engine start (before light up). Test signal is cancelled almost immediately in order not to impact the starting sequence.
The EEC receives PRSOV closure feedback from its two position switches.

G7508471 - G3NT1T0 - FM70DB000000071

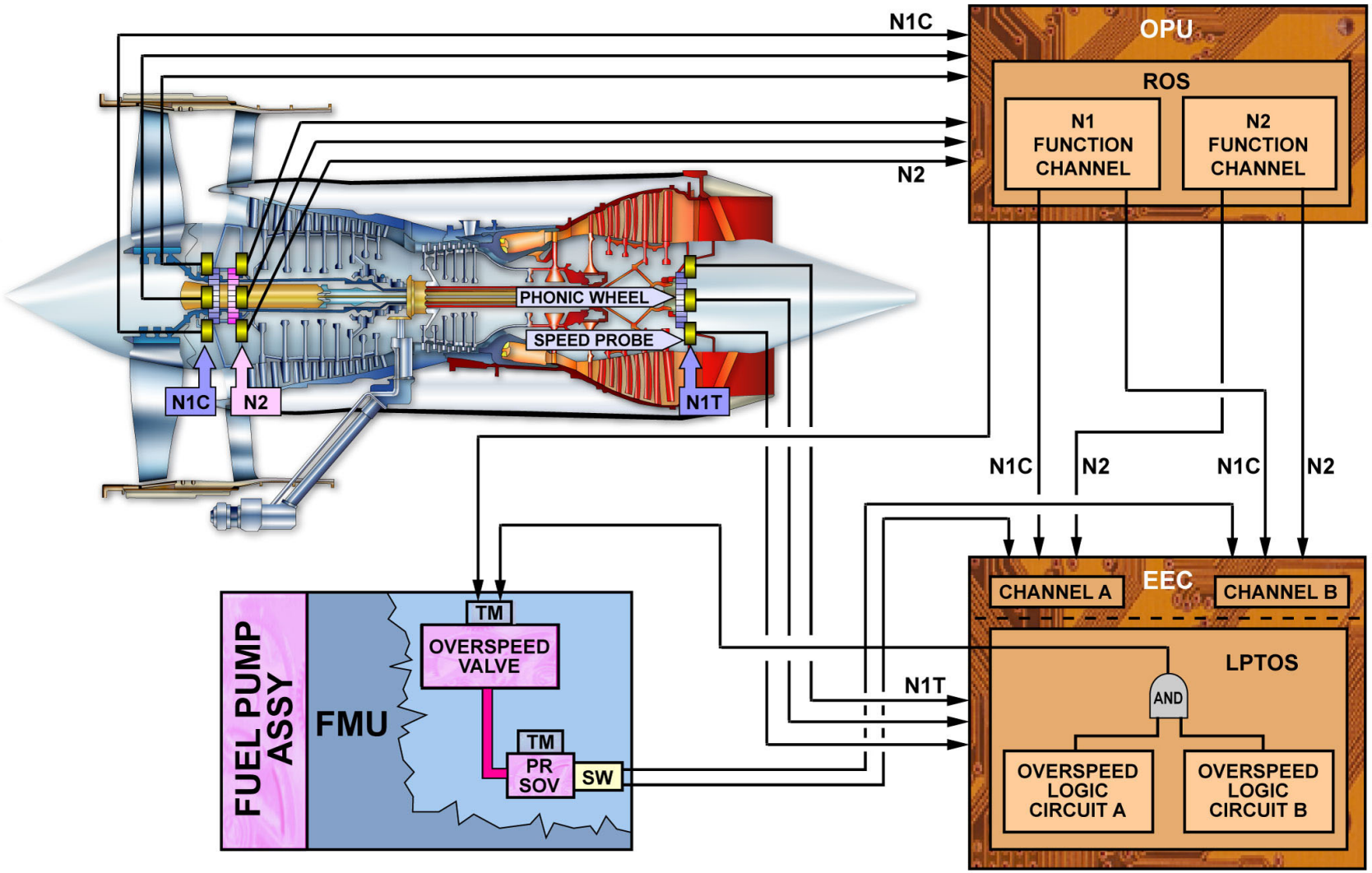

OVERSPEED PROTECTION SYSTEM - SPEED PROBE INSTALLATION ... OVERSPEED SYSTEM AUTO TEST

G7508471 - G3NT1T0 - FM70DB00000071

This Page Intentionally Left Blank

G7508471 - G3NT1T0 - FM70DB000000071

ENGINE LIMIT PROTECTION D/O (3)

TURBINE OVERSPEED & OVERHEAT DETECTION SYSTEM

The turbine overspeed & overheat detection system measures the temperature of the IP turbine disk cooling air, at both sides of the turbine disk.
If the temperature at the front or the rear of the IP turbine rises above the specified limit, the EEC will reduce the engine thrust and trigger corresponding warning.

DESCRIPTION

The turbine overheat detection system includes 2 detector assemblies of the dual thermocouple type attached to the High Pressure (HP)/IP turbine case.
There is one detector assembly located at the front of the IP turbine disk and one at the rear.
The rear turbine overheat detector is installed through one of the LP stage 1 (LP1) nozzle guide vanes,
the front turbine overheat detector is installed through one of the IP turbine nozzle guide vanes.
Each detector assembly has two thermocouple elements: one sends a signal to channel A of the EEC, the other sends a signal to channel B. The voltage of each signal is proportional to the temperature sensed by its related thermocouple.

OPERATION

An overspeed and/or overheat condition is detected, if:
- both thermocouple elements in the same detector sense the overheat limit.
- one element senses an overheat limit and the other element in the same detector is faulty.
If the temperature of the IP turbine disk cooling air reaches a specified limi, first the EEC automatically limits the engine thrust up to 55% of the maximum available thrust, and triggers the "ENG1(2) THRUST LIMITED" level 2 warning.
If the temperature is still above the specified limit despite the power reduction, after five seconds the EEC will trigger the "EN1(2) TURBINE OVHT" level 3 warning, requesting the pilot to set the affected engine at idle power. Then if the warning persists, the engine must be shut down.

G7508471 - G3NT1T0 - FM70DB000000071

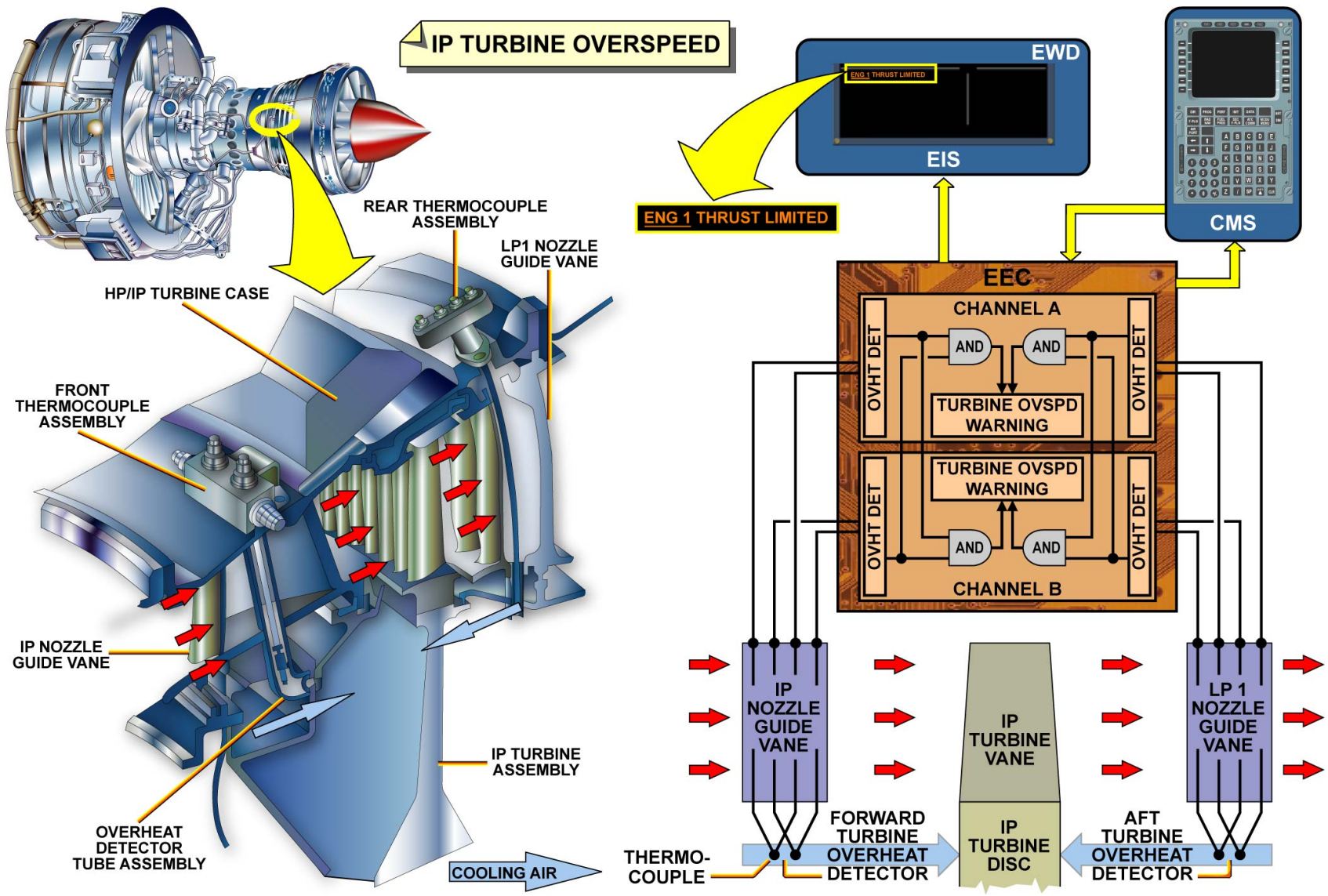

TURBINE OVERSPEED & OVERHEAT DETECTION SYSTEM - DESCRIPTION & OPERATION

G7508471 - G3NT1T0 - FM70DB00000071

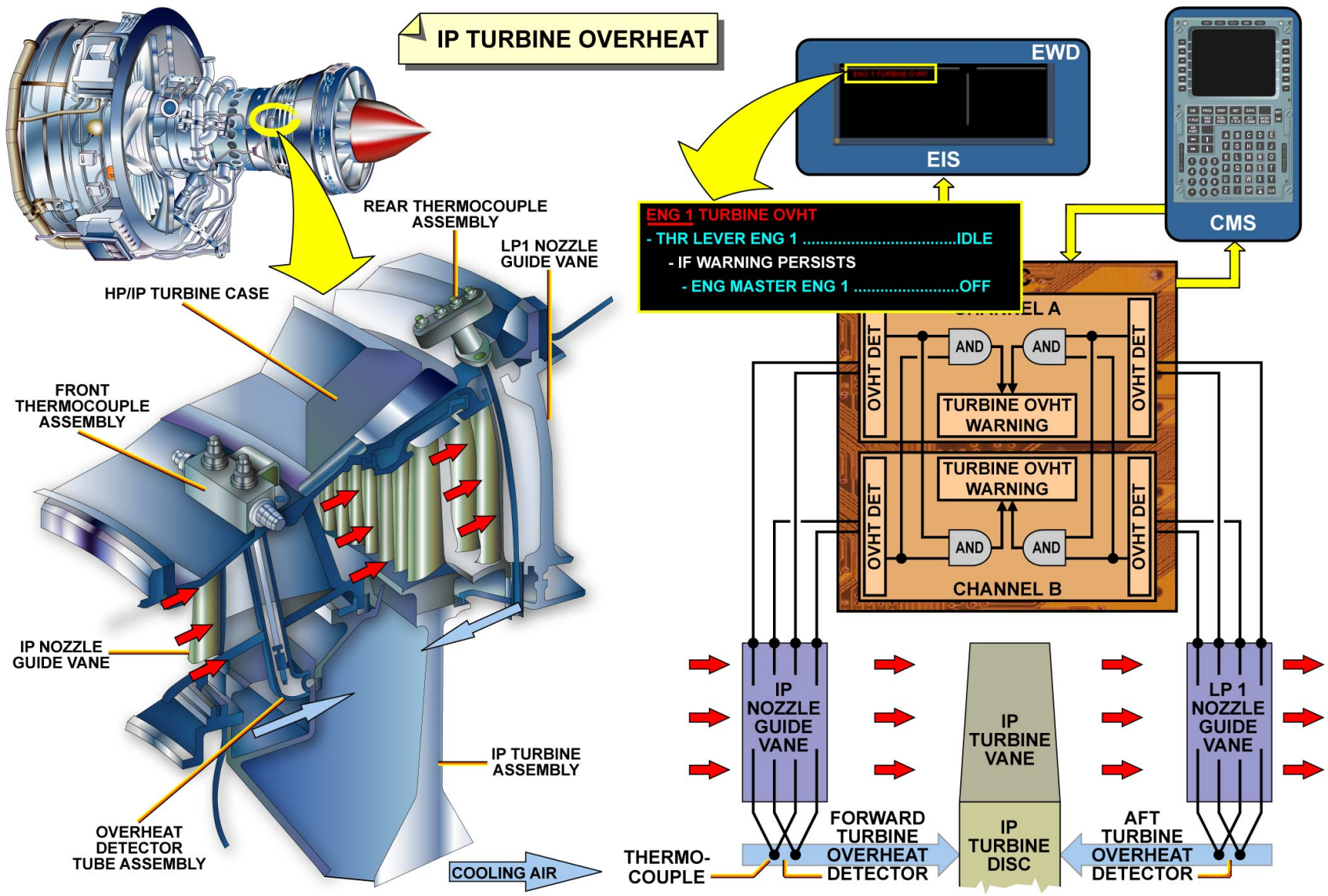

TURBINE OVERSPEED & OVERHEAT DETECTION SYSTEM - DESCRIPTION & OPERATION

G7508471 - G3NT1T0 - FM70DB00000071

This Page Intentionally Left Blank

G7508471 - G3NT1T0 - FM70DB000000071

FADEC PRINCIPLE (3)

GENERAL

The Full Authority Digital Engine Control (FADEC) controls and monitors the engine and engine subsystems. It includes the Engine Electronic Controller (EEC), which is a dual channel computer, a Power Control Unit (PCU), an Overspeed Protection Unit (OPU) and a set of peripherals (control components, sensors) directly connected to it. The EEC, PCU and OPU are installed into a ventilated electronic-unit-protection box located on the fan case LH side. The EEC controls the engine thrust based on manual or automatic thrust demands and uses information from A/C systems, some centralized by an interface computer called the Engine Interface and Vibration Monitoring Unit (EIVMU), to optimize engine operation.

G7508471 - G3NT1T0 - FM70DJ000000071

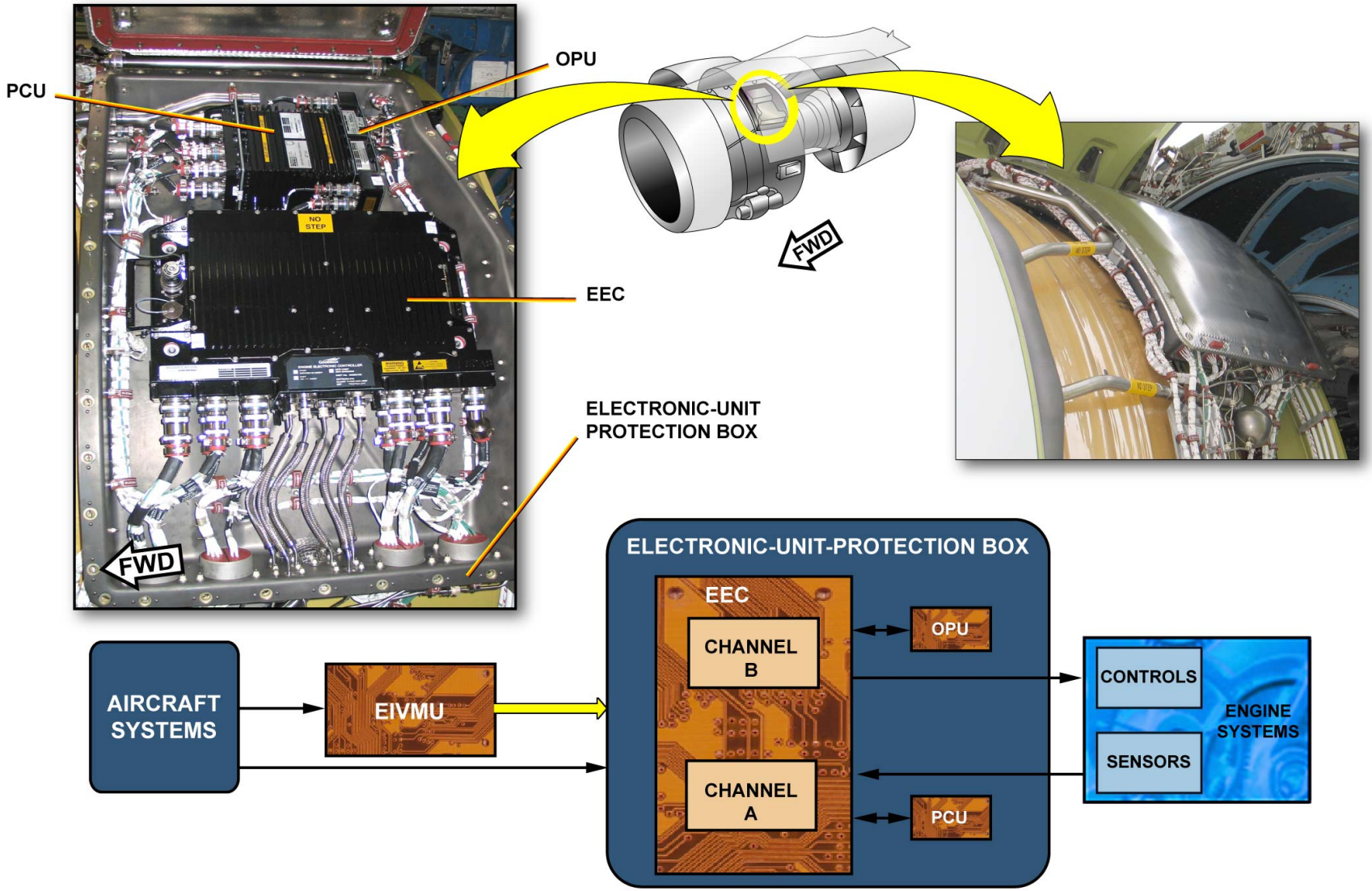
PCU
OPU
EEC
ELECTRONIC-UNIT
PROTECTION BOX
FWD
FWD
ELECTRONIC-UNIT-PROTECTION BOX
EEC
CHANNEL
B
CHANNEL
A
OPU
PCU
AIRCRAFT
SYSTEMS
EIVMU
CONTROLS
SENSORS
ENGINE
SYSTEMS

GENERAL

FADEC PRINCIPLE (3)

FADEC DESIGN - ARCHITECTURE

The EEC is a digital unit made of two independent and similar channels of operation. The two channels are identified as channel A and channel B. Each channel communicates with the other one. All the hardware is mounted in the same housing.
Each channel receives inputs from the aircraft and from engine subsystem sensors, probes and switches. The signals from these devices are known as feedback signals. They are generally duplicated for channel A and B and "close the loop" on the EEC control functions. Each EEC channel is able to control engine subsystem torque motors and solenoids. Each channel also sends outputs to the aircraft.

G7508471 - G3NT1T0 - FM70DJ000000071

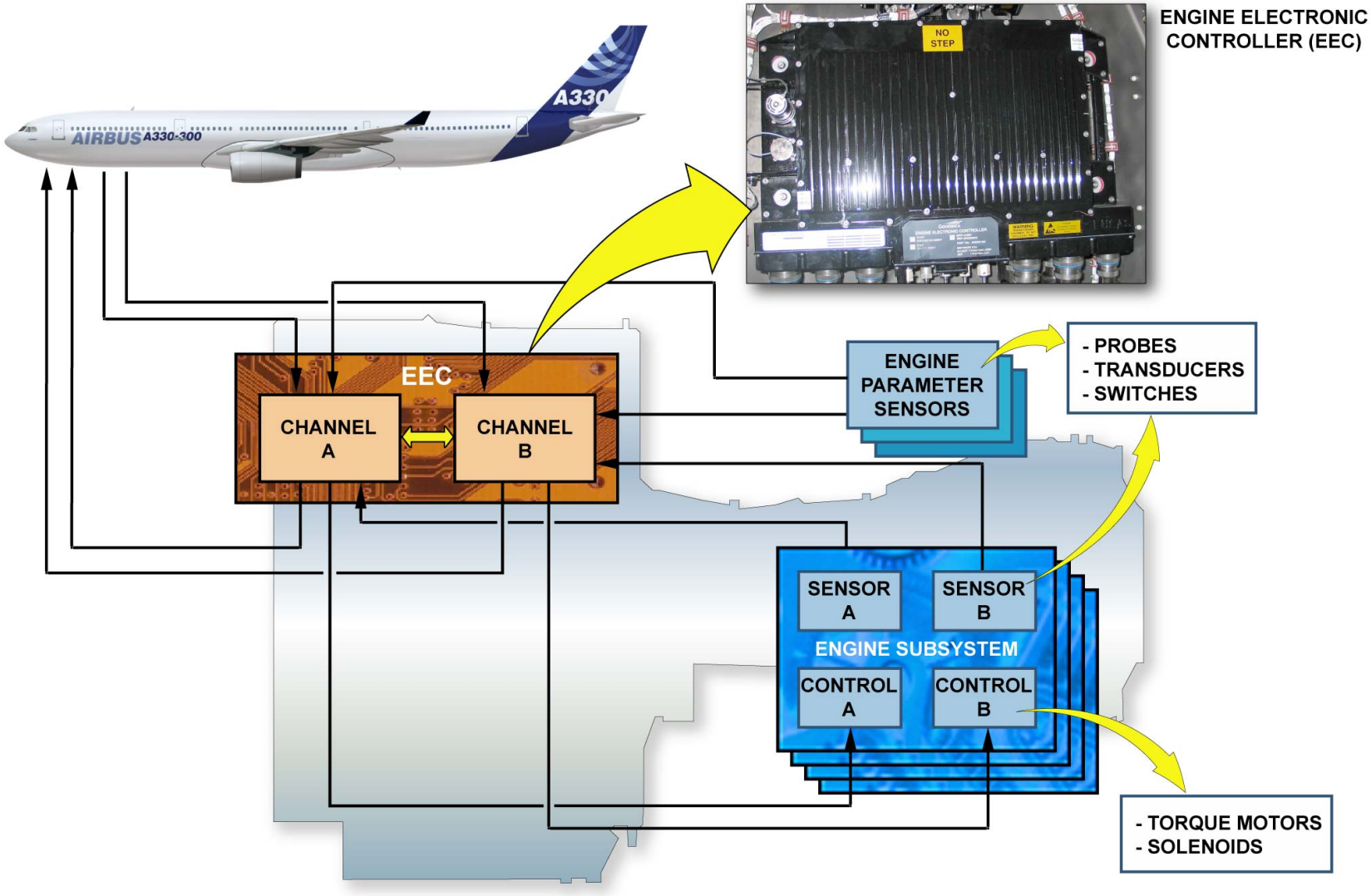

FADEC DESIGN - ARCHITECTURE

FADEC PRINCIPLE (3)

FADEC DESIGN - PROCESS

Most FADEC operations are based on the same principle: as a response to a demand from the aircraft or from the EEC internal schedules. Taking into account input parameters from the aircraft and the engine parameter sensors, the EEC generates a command signal sent to an engine subsystem. The EEC makes sure that its command has been followed by monitoring the feedback from the engine subsystem sensors. The EEC also sends data to the aircraft.
One channel controls (Active) while the other channel monitors (Standby). In case of an input failure, the control channel can access the inputs of the monitor channel through the inter-channel bus. This design keeps the active channel serviceable as long as possible.
In case of failure of a control channel circuit, the control is given to the standby channel. Normally the EEC changes over the control between channel A and channel B at each power up.

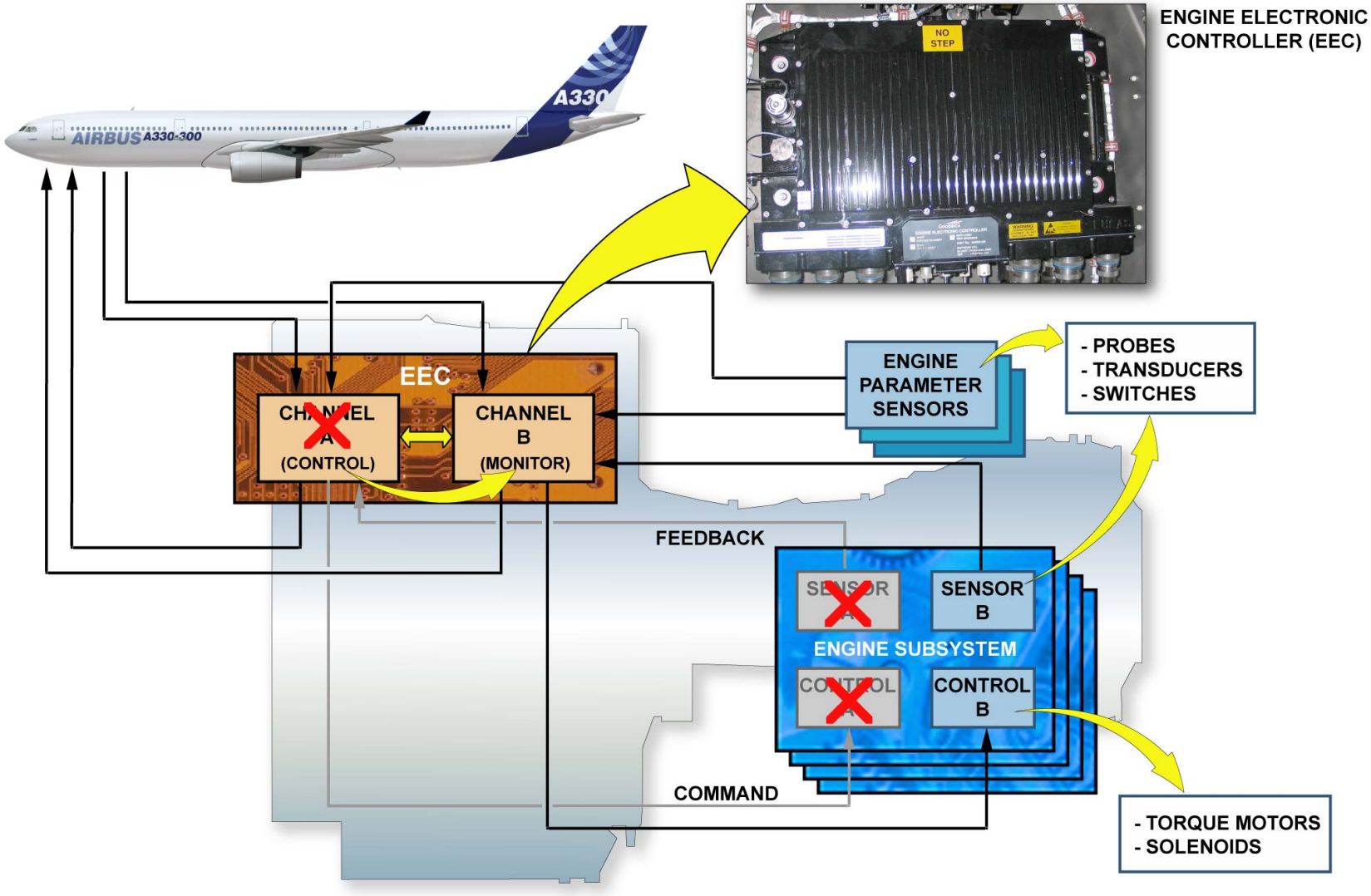

FADEC DESIGN - PROCESS

FADEC PRINCIPLE (3)

FADEC SUBSYSTEMS

The FADEC incorporates three main subsystems:
- engine control,
- overspeed protection,
- power supply.

NOTE: The subsystems are physically independent.

ENGINE CONTROL

The EEC controls and monitors various engine systems.
The most important control function of the EEC is to control engine thrust. Based on manual or automatic thrust demand, the EEC controls fuel flow through the metering valve in the Fuel Metering Unit (FMU).
The EEC controls the engine during the start sequence. The active channel controls the starter control valve and the PCU. The PCU controls the power supply for ignition. The EEC controls the airflow through the IP and HP compressors by means of the Variable Stator Vanes (VSVs) and the compressor handling bleed valves, in order to avoid surge and stall conditions.
The EEC controls the Turbine Impingement Cooling (TIC) system, which is used to cool the turbine case and optimize the clearance between the turbine blade tips and the case to improve the turbine efficiency. The EEC keeps the oil temperature within limits by controlling the air modulating valve of the Air Oil Heat Exchanger (AOHE).
The EEC controls the thrust reverser system operation through the use of the Isolation Control Unit (ICU) and the Direction Control Unit (DCU).
The High Pressure Valve (HPV), supplying the aircraft pneumatic system, is electrically controlled to the closed position by the EEC following certain engine operating conditions.

Several types of feedback components, such as sensors, switches, thermocouples, etc. are used by the EEC to monitor engine operation and to provide indications in the cockpit.

OVERSPEED PROTECTION

The OPU is designed to initiate an immediate engine shut down in case of Rotor OverSpeed (ROS) and/or Low Pressure Turbine OverSpeed (LP TOS) detection.
The OPU monitors the N1 and N2 rotor speed. If either speed exceeds the ROS limit, the OPU cuts off the fuel supply through the FMU.
The LP TOS protection is the function of an independent dedicated circuit board, installed in the EEC channel A. It compares the LP compressor speed with the LP turbine speed. In the unlikely event of an LP shaft breakage, the speed difference between the LP compressor and LP turbine is detected by the LP TOS protection circuit which cuts off the fuel supply through the FMU.

POWER SUPPLY

The electrical power supply to the EEC is controlled by the dual channel PCU. Each PCU channel independently supplies one EEC channel.
When the engine is running, a dedicated alternator installed on and driven by the external gearbox, supplies electrical power to the EEC through the PCU. The dedicated alternator also supplies the OPU. However, for ground maintenance, engine starting or in case of loss of dedicated alternator power, an alternate stand-by power source is supplied to the EEC from the aircraft 115 VAC network.

G7508471 - G3NT1T0 - FM70DJ000000071

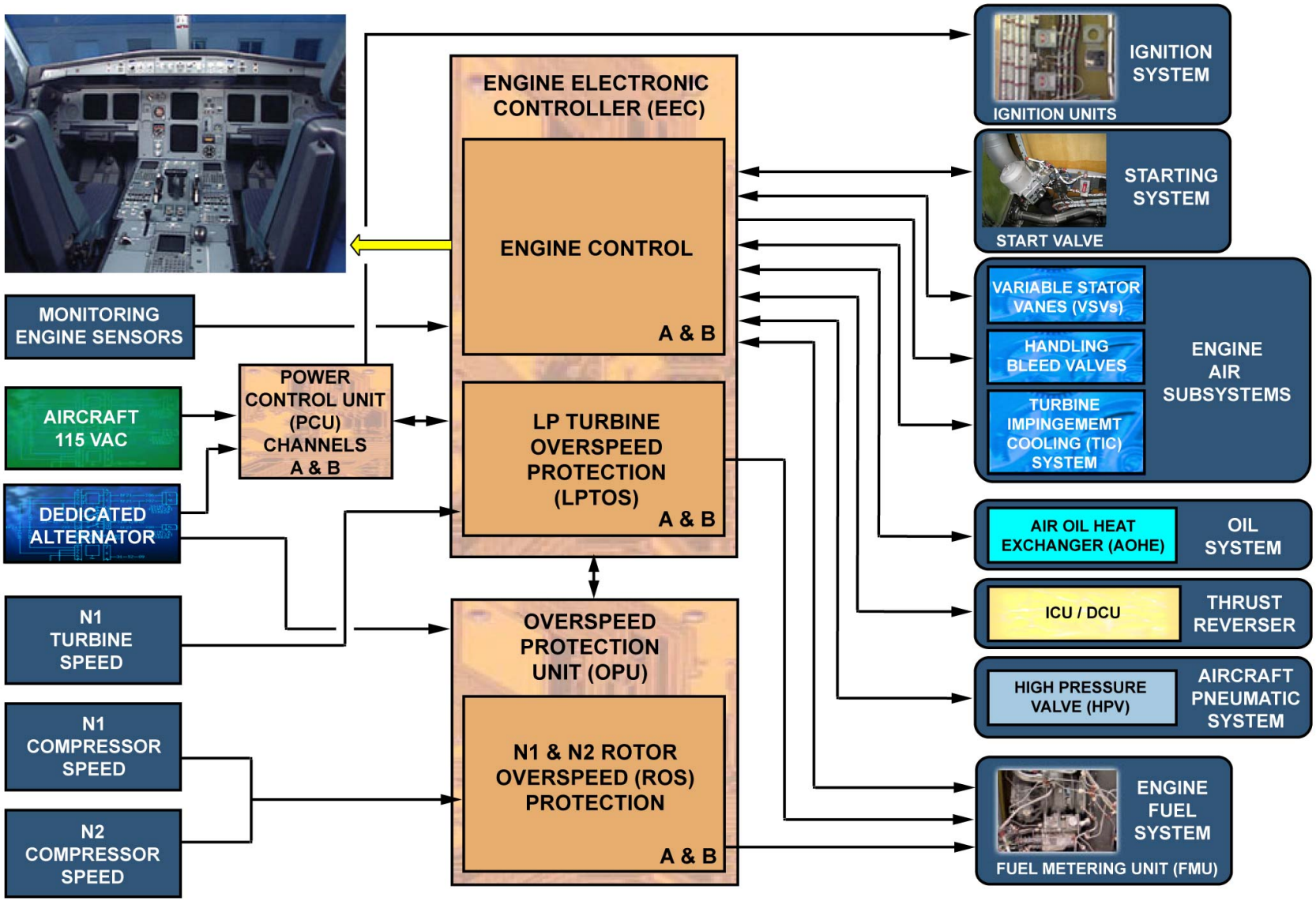

FADEC SUBSYSTEMS - ENGINE CONTROL ... POWER SUPPLY

G7508471 - G3NT1T0 - FM70DJ00000071

FADEC D/O (3)

FADEC OPERATION

The EEC is the primary component of the FADEC system. As such, the EEC is the interface between the aircraft and the engine. Aircraft computers and systems exchange data (control and monitoring signals) with both EEC channels. During engine operation, both channels exchange control and monitoring signals with the FMU and engine sub-systems. This module will detail the various EEC inputs and outputs on both the aircraft and engine sides.

G7508471 - G3NT1T0 - FM70DA000000071

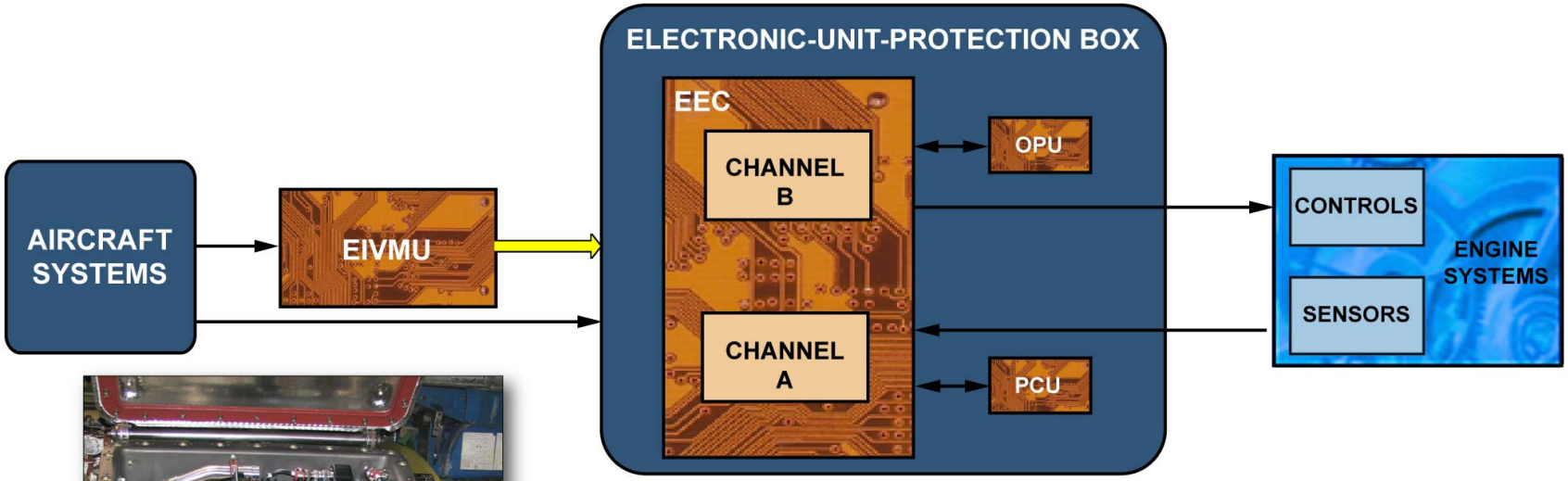

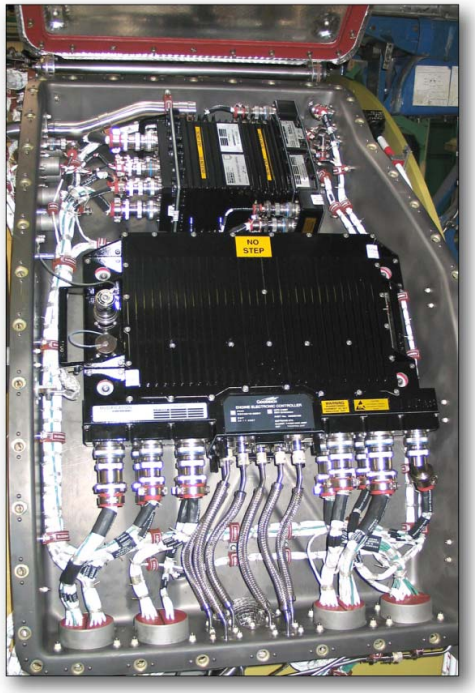

ELECTRONIC UNIT PROTECTION BOX

FADEC OPERATION

FADEC D/O (3)

EEC - ENGINE INTERFACE

The EEC controls the engine thrust and several engine sub-systems for normal operation and for engine efficiency. Only one channel of the EEC is in control but either channel can control all the systems. Similarly, all of the feedback signals for sub-system control and monitoring are dual signals sent to both EEC channels.

FUEL SYSTEM

The EEC controls three Fuel Metering Unit (FMU) torque motors.
These torque motors (TM) operate three internal FMU servo-valves:
- a fuel metering valve, which controls the rate of fuel flow delivered to the combustion chamber,
- a Pressure Raising and Shut-Off Valve (PRSOV) which starts and stops the fuel flow,
- an overspeed valve which closes the PRSOV, in case of an overspeed condition, to shut down the engine.

Both EEC channels receive position feedback:
- two resolvers monitor the metering valve position,
- two microswitches monitor the PRSOV position.

G7508471 - G3NT1T0 - FM70DA000000071

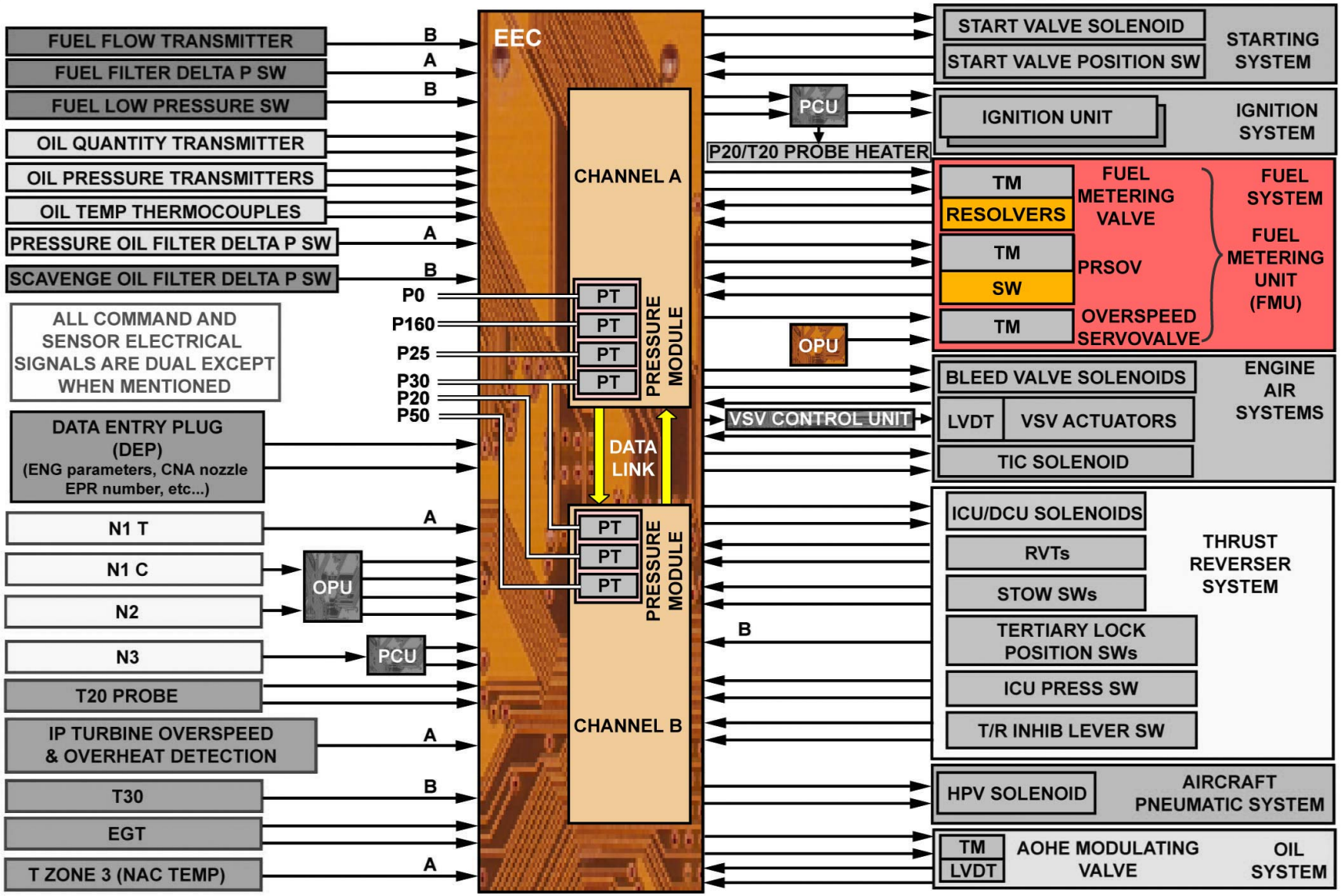

EEC - ENGINE INTERFACE - FUEL SYSTEM

G7508471 - G3NT1T0 - FM70DA000000071

FADEC D/O (3)

EEC - ENGINE INTERFACE (continued)

ENGINE AIR SYSTEM

Compressor bleed valves are located around the compressor. The valves are used to unload the compressors during start and transient operations to prevent surges and stalls. The EEC controls the operation of four IP bleed valves, and three HP bleed valves through the bleed valve controller. The controller is supplied with HP3 air (high pressure compressor stage 3) and contains the IP and HP bleed valve solenoids, When a solenoid is energized by the EEC channel A or B, HP3 air is supplied to the related bleed valve.

Variable inlet guide vanes and the first 2 stages of stator vanes adjust the airflow through the IP compressor. The EEC controls the angular position of the variable vanes through the VSV control unit. A torque motor controlled servo-valve in the controller supplies high-pressured fuel to the VIGV/VSV actuators. The EEC receives feedback from LVDTs integrated in the actuators.

The EEC controls the operation of the Turbine Impingement Cooling (TIC) valve by the TIC solenoid valve. There is no feedback of the TIC valve position.

G7508471 - G3NT1T0 - FM70DA000000071

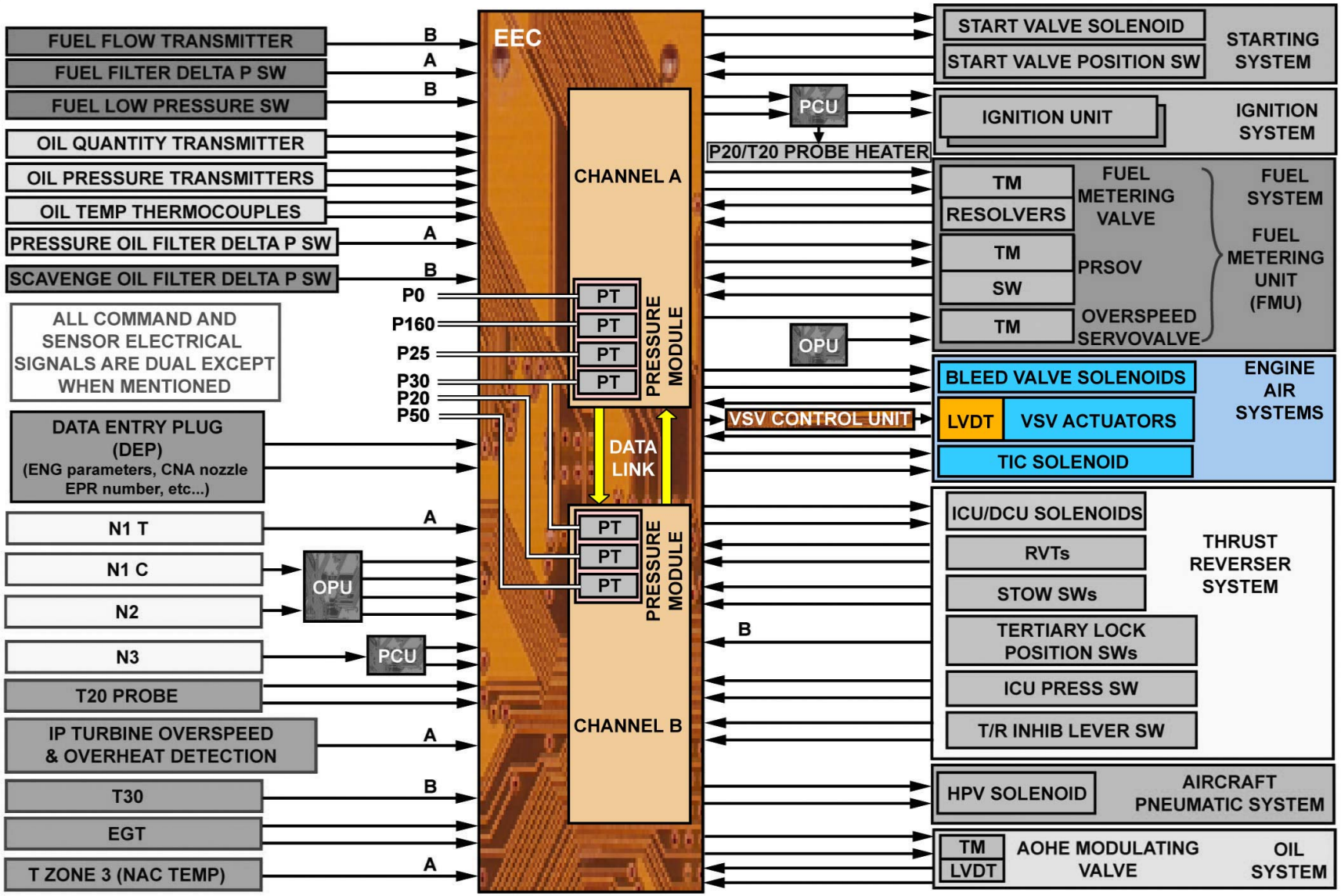

EEC - ENGINE INTERFACE - ENGINE AIR SYSTEM

G7508471 - G3NT1T0 - FM70DA000000071

FADEC D/O (3)

EEC - ENGINE INTERFACE (continued)

THRUST REVERSER SYSTEM

The EEC controls the hydraulic operation of the thrust reverser pivoting doors. To operate the thrust reverser, the EEC sends command signals to the Isolation Control Unit (ICU) and the Direction Control Unit (DCU). The ICU and DCU direct hydraulic pressure to unlock, deploy and stow the thrust reversers.
The EEC receives feedback signals for control and monitoring from:
- the 4 Rotational Variable Transducers (RVTs),
- the 4 stow switches,
- the 4 tertiary lock position microswitches,
- the ICU pressure switch,
- the thrust reverser inhibit lever switch.

G7508471 - G3NT1T0 - FM70DA000000071

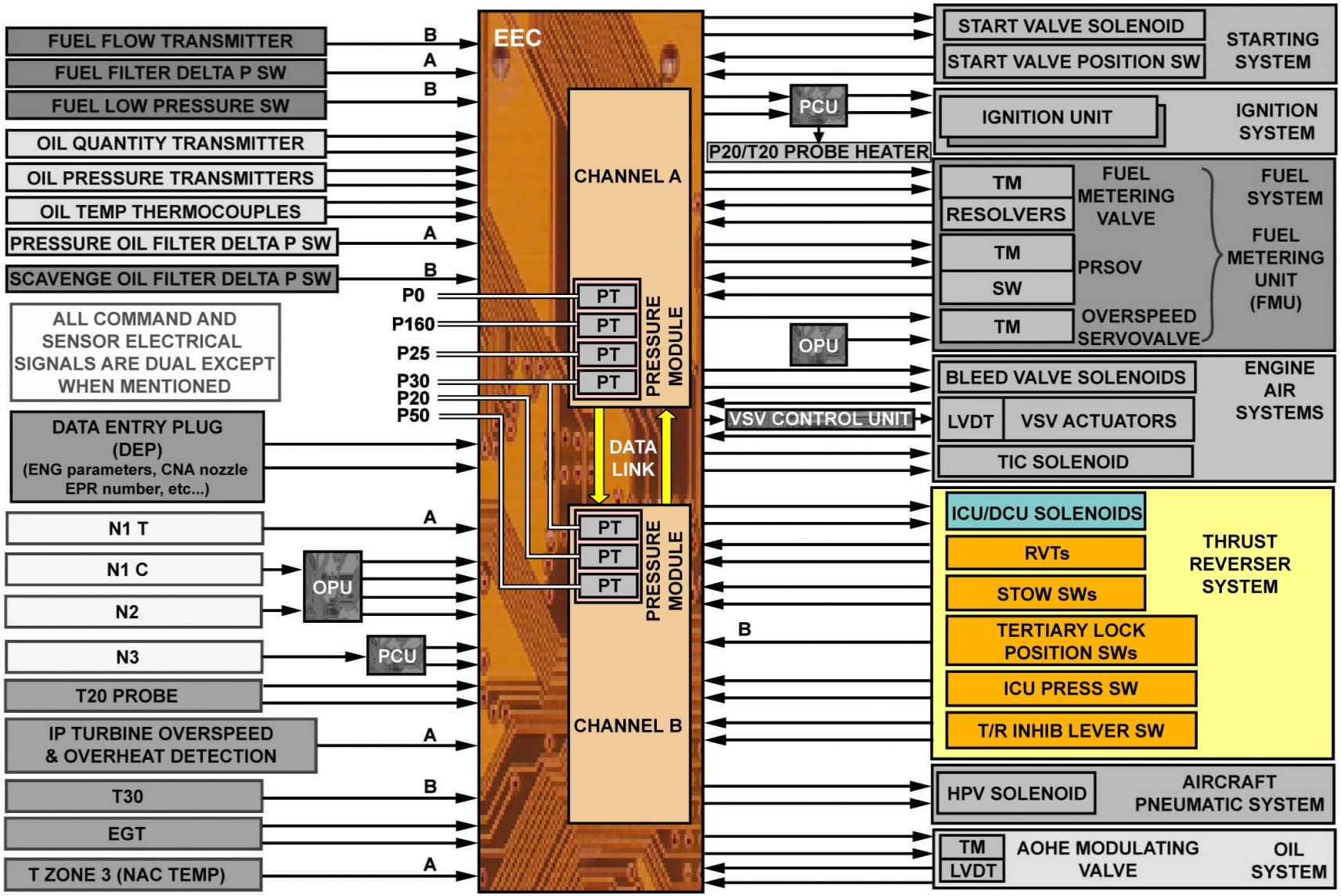

EEC - ENGINE INTERFACE - THRUST REVERSER SYSTEM

G7508471 - G3NT1T0 - FM70DA000000071

FADEC D/O (3)

EEC - ENGINE INTERFACE (continued)

AIRCRAFT PNEUMATIC SYSTEM

In some operating conditions, the EEC controls the High Pressure Valve (HPV) closed by energizing the HPV dual-coil solenoid (Channel A or B control).

G7508471 - G3NT1T0 - FM70DA000000071

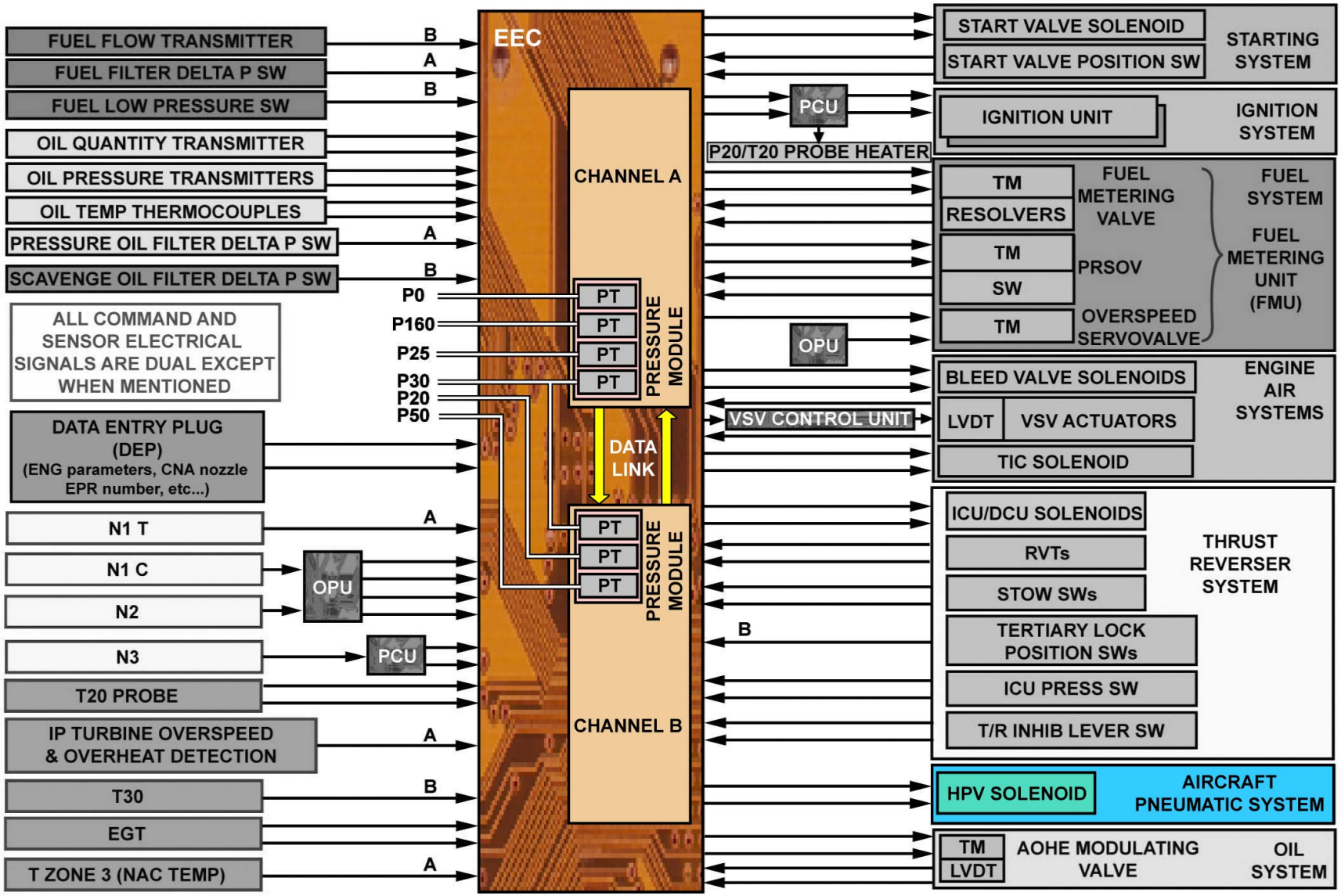

EEC - ENGINE INTERFACE - AIRCRAFT PNEUMATIC SYSTEM

G7508471 - G3NT1T0 - FM70DA00000071

FADEC D/O (3)

EEC - ENGINE INTERFACE (continued)

OIL SYSTEM

As part of the engine heat management control, the EEC controls the operation of the Air Oil Heat Exchanger (AOHE) air modulating valve. A torque motor in the valve supplies servo fuel pressure to operate the valve. When the valve opens, LP air is ducted across the heat exchanger to decrease the oil temperature. The valve also has an LVDT for position feedback to the EEC.

G7508471 - G3NT1T0 - FM70DA000000071

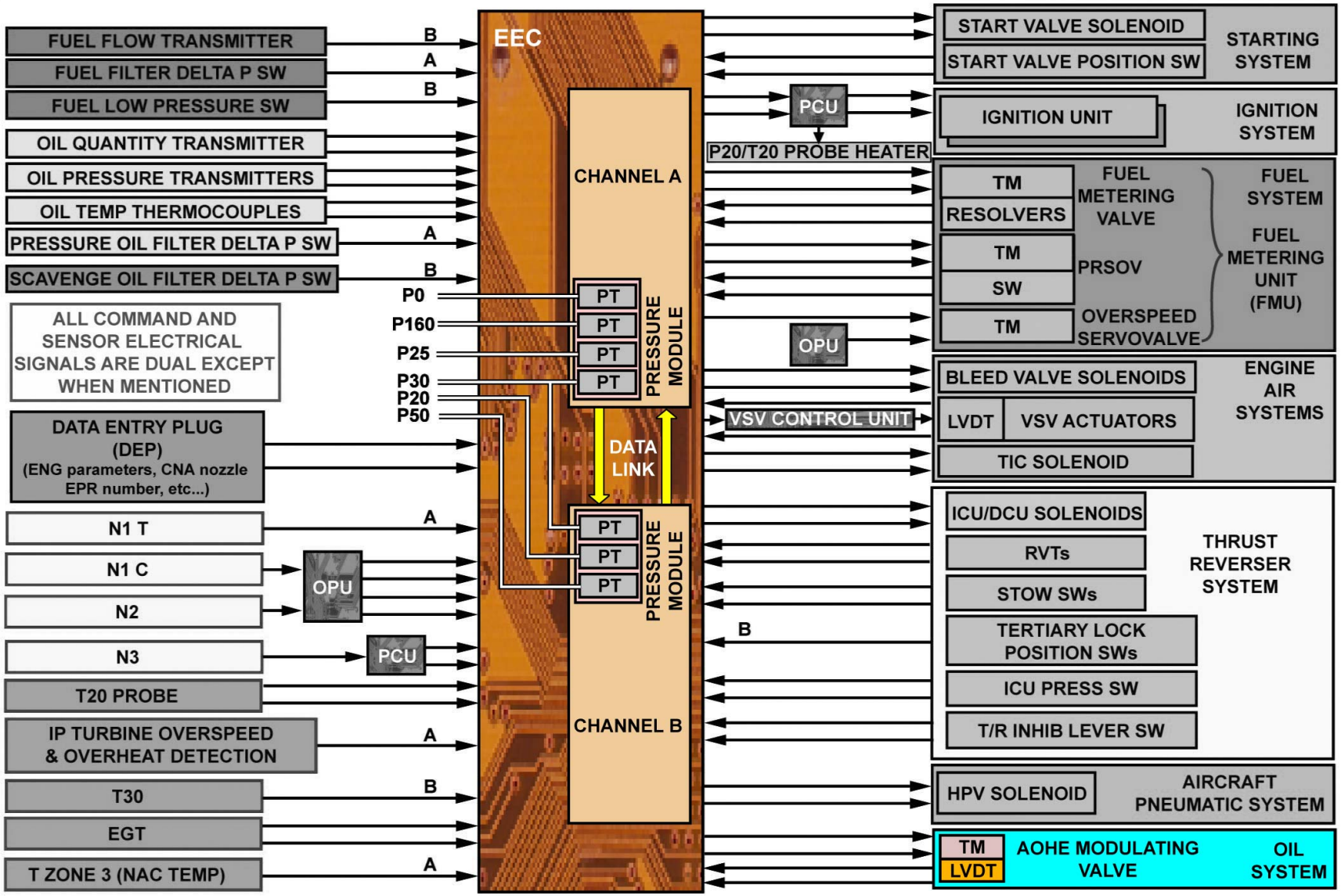

EEC - ENGINE INTERFACE - OIL SYSTEM

G7508471 - G3NT1T0 - FM70DA000000071

FADEC D/O (3)

EEC - ENGINE INTERFACE (continued)

STARTING SYSTEM INPUTS/OUTPUTS

The EEC electrically controls the operation of the starter control valve for automatic engine start, and manual engine start engine motoring. The EEC energizes the starter control valve solenoid and receives feedback on valve position from a position switch.

G7508471 - G3NT1T0 - FM70DA000000071

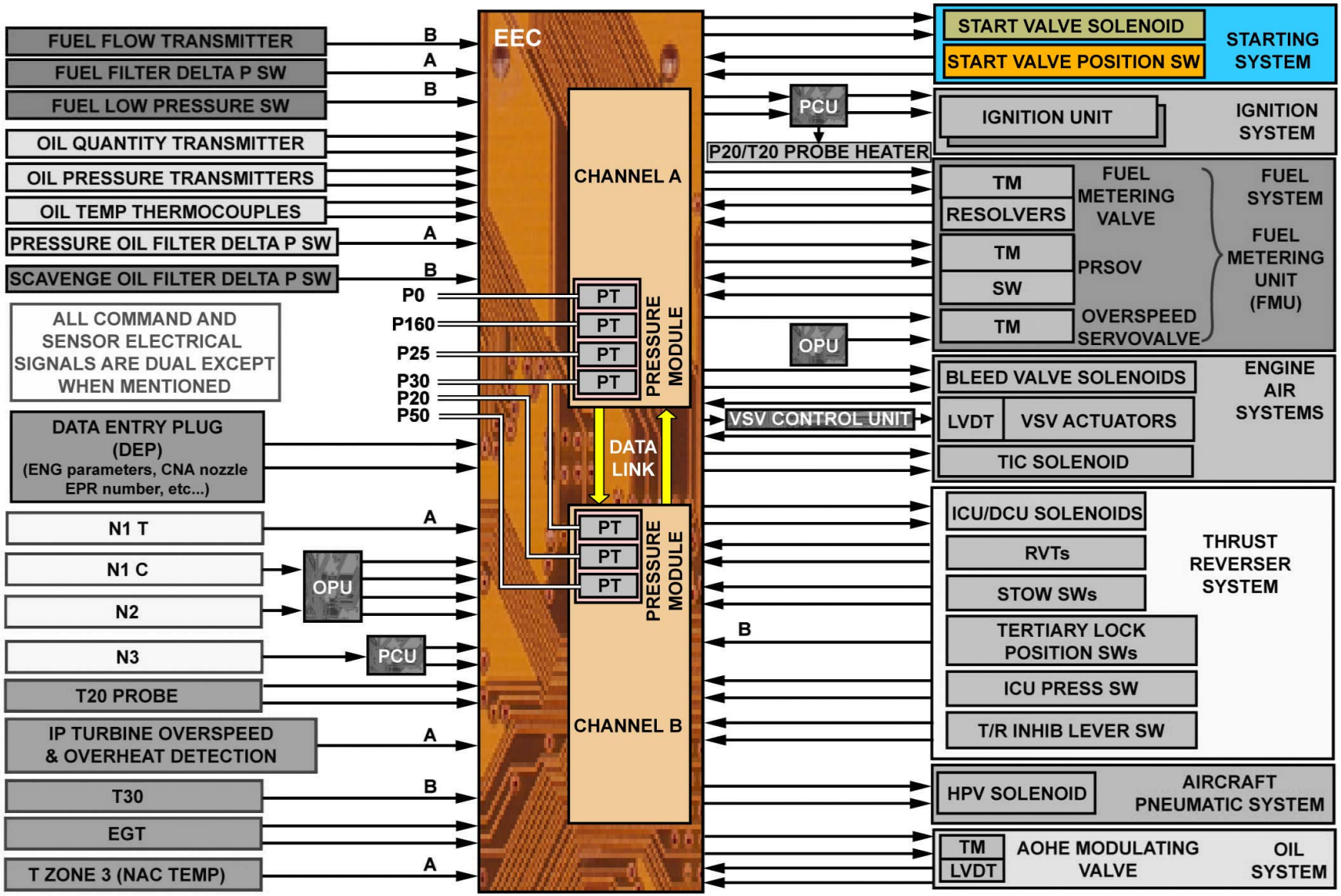

EEC - ENGINE INTERFACE - STARTING SYSTEM INPUTS/OUTPUTS

G7508471 - G3NT1T0 - FM70DA00000071

FADEC D/O (3)

EEC - ENGINE INTERFACE (continued)

IGNITION SYSTEM INPUT

The EEC controls the two ignition systems. The EEC channel A controls one ignition system and the EEC channel B controls the other system. The PCU channels A and B supply each system independently.

G7508471 - G3NT1T0 - FM70DA00000071

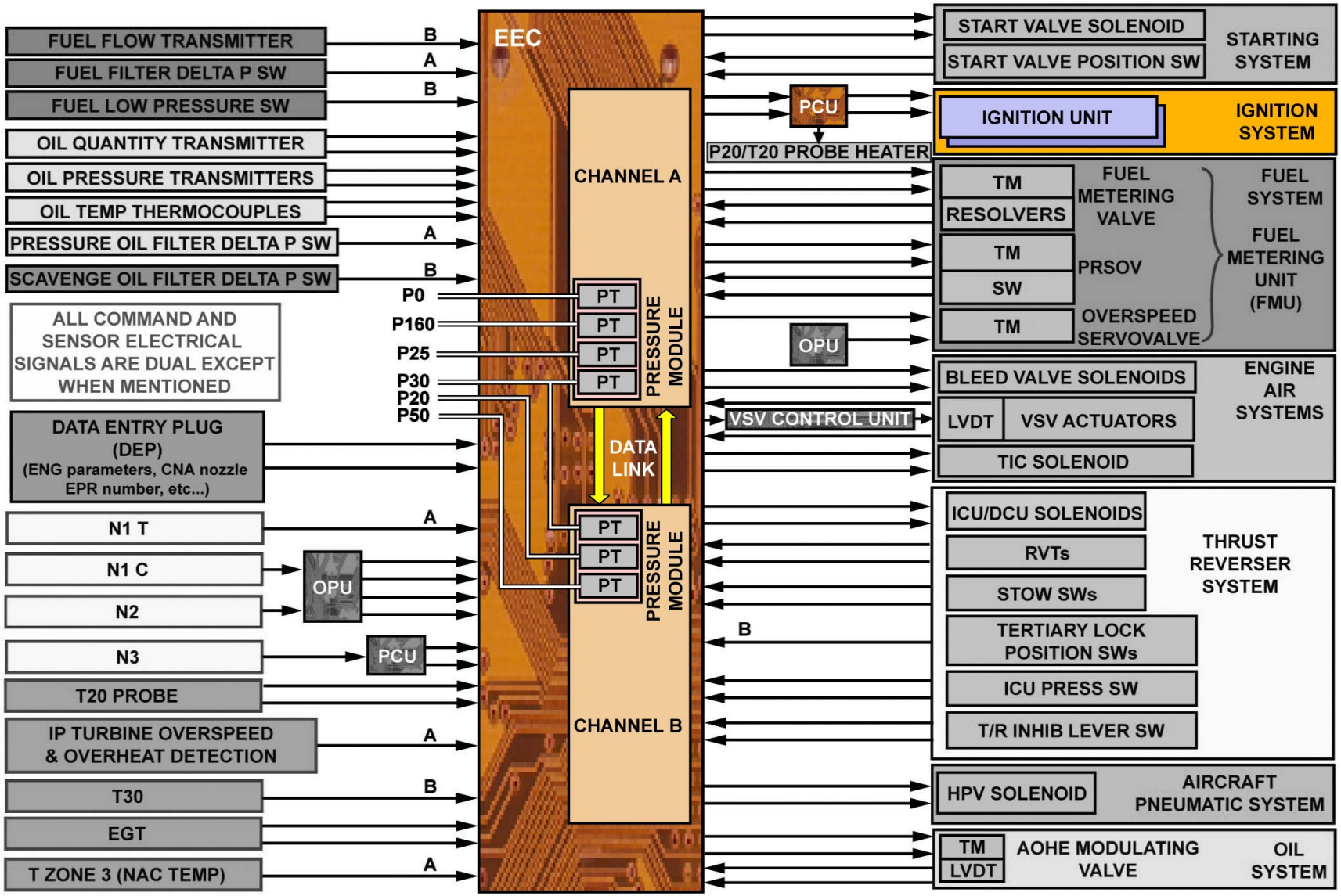

EEC - ENGINE INTERFACE - IGNITION SYSTEM INPUT

G7508471 - G3NT1T0 - FM70DA00000071

FADEC D/O (3)

EEC - ENGINE INTERFACE (continued)

P20/T20 PROBE HEATING

Since the P20/T20 probe is installed in the inlet, heating elements are necessary to prevent icing and make sure that accurate data is sent to the EEC for engine control. These heating elements are supplied with 115 VAC through the PCU.

G7508471 - G3NT1T0 - FM70DA000000071

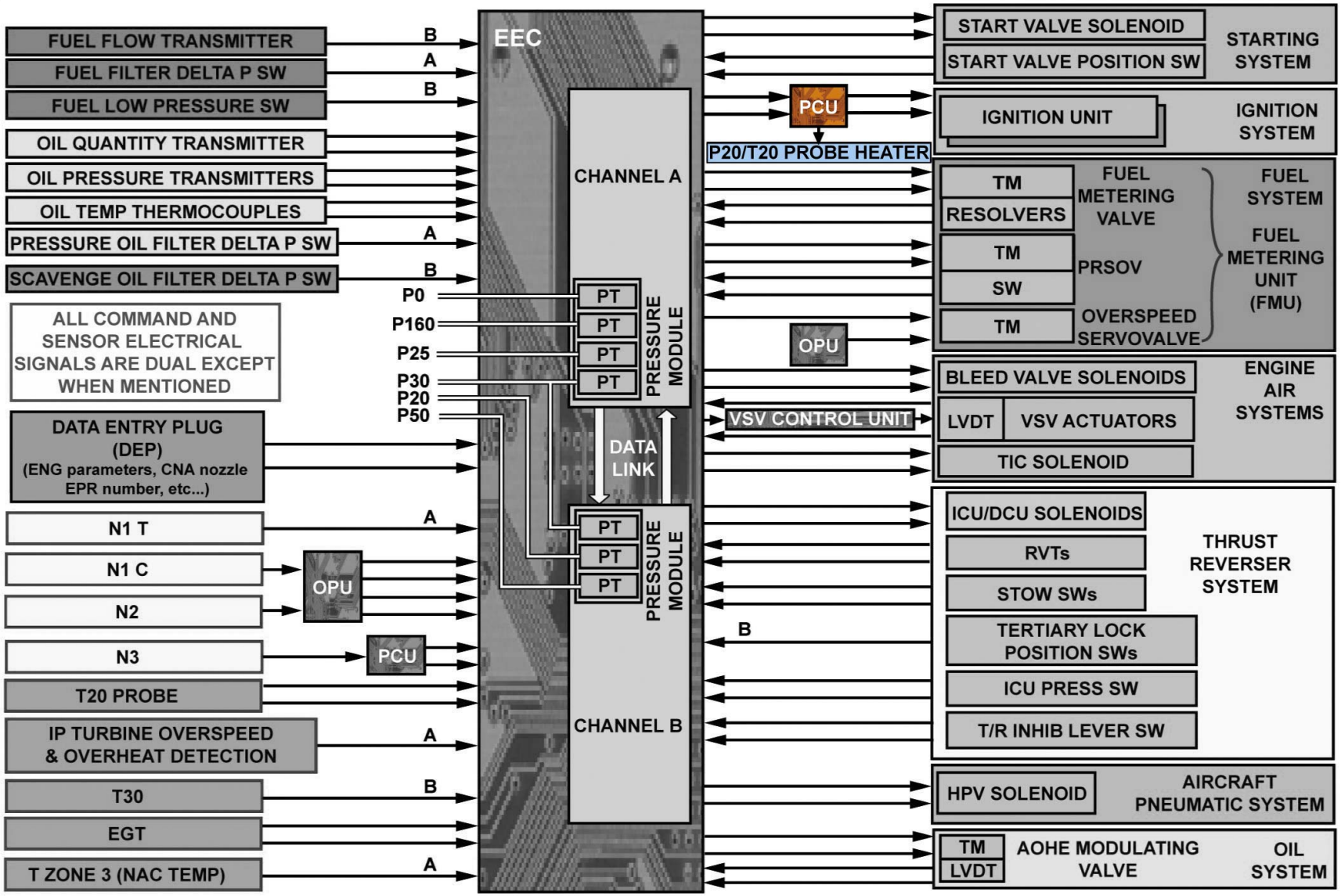

EEC - ENGINE INTERFACE - P20/T20 PROBE HEATING

G7508471 - G3NT1T0 - FM70DA00000071

FADEC D/O (3)

EEC - ENGINE INTERFACE (continued)

ENGINE PARAMETER INPUTS FOR CONTROL, MONITORING AND INDICATION

A fuel flow transmitter continuously monitors the fuel flow delivered to the fuel nozzles. It supplies electrical signals to the EEC that are in proportion to the fuel flow going through the transmitter. The EEC uses these signals to calculate the fuel flow rate and the quantity of fuel that has been used by the related engine (fuel used). The EEC then transmits this data to display on the ECAM.

A fuel filter differential pressure switch and a fuel low-pressure switch continuously monitor the condition of the LP fuel supply. In case of high differential pressure (fuel filter clogging), the P switch sends a signal to the EEC channel A. This signal is used to generate the FUEL CLOG warning on the ECAM. In case low fuel pressure downstream of the LP fuel pump, the low-pressure switch sends a signal to the EEC channel B. This signal is used to generate the related CMS fault message.

The oil quantity transmitter is installed in the top of the oil tank. The transmitter signal is sent to the EEC and is used for oil quantity indication on the ECAM. Two oil pressure transmitters (one for each EEC channel) send oil pressure signals to the EEC. This transmitter signal is used for oil pressure indication on the ECAM.

The oil temperature thermocouples are installed on the top of the scavenge oil filter housing. These thermocouples send oil temperature inputs to the EEC. This signal is used for oil temperature indication on the ECAM.

The pressure and scavenge oil filters are monitored by P switches. In case of high differential pressure (oil filter clogging), the related P switch sends a signal to the EEC. This signal is used to generate the OIL CLOG warning on the ECAM.

The oil system is also monitored by a low oil pressure switch, which IS NOT connected to the FADEC. The switch is triggered when the engine oil pressure drops below 25 psi. The low oil pressure signal is sent directly to the FWC to generate an emergency warning.

The LP (N1) shaft speed and IP (N2) shaft speed signals are given respectively by three N1 speed sensors and three N2 speed sensors. The sensors are located internally in the forward bearing compartment. The N1 and N2 speed signals are sent to both EEC channels, via the Overspeed Protection Unit (OPU) for engine control, overspeed protection and indication on ECAM.

Three LP turbine speed probes send signals directly to EEC channel A. LP turbine speed and LP compressor (N1) speed signals are compared in the EEC to detect LP shaft breakage.

The EEC dedicated alternator is used to sense HP (N3) shaft speed. The dedicated alternator is driven by the gearbox which is in turn is driven by the HP shaft. The output of the dedicated alternator is at a frequency proportional to the HP shaft speed and provides an N3 speed signal for each channel of the EEC through the PCU. The EEC sends the N3 signal to ECAM for indication.

The T20 thermocouples measure air temperature at the fan inlet. The thermocouples are part of the P20/T20 probe located at the 12 o'clock position in the inlet. The dual T20 thermocouples send the temperature signal to both EEC channels.

The EEC monitors the temperature of the air supplied to the combustion chamber (T30) with three thermocouples mounted at equal distances around the combustion chamber outer case. The thermocouples are connected in parallel and electrically connected to the EEC channel B. T30 is used as a control parameter to make sure an engine flame-out is prevented during bad weather conditions (such as heavy rain and/or hail).

Two dual-thermocouples are installed on the IP turbine case to measure the air temperature across the IP turbine disk. The FRONT and REAR thermocouples send signals to both channels of the EEC. If the

G7508471 - G3NT1T0 - FM70DA000000071

temperature becomes excessive, first the EEC automatically limits the engine thrust up to 55% of the maximum take-off thrust, to protect the integrity of the IP turbine, and a level 2 ENG THRUST LIMITED warning is generated (IPTOS function of the EEC). If the temperature is still increasing, a level 3 ENG TURBINE OVHT warning is generated with a pilot action to shut down the engine.

The Exhaust Gas Temperature (EGT) indication comes from 11 dual thermocouples. The EGT thermocouples are wired in parallel and the average temperature is sent to both EEC channels for the ECAM display and engine limit protection.

A single thermocouple located in Zone 3 (lower engine core area) sends the nacelle temperature signal to the EEC channel A for indication on the ECAM.

G7508471 - G3NT1T0 - FM70DA00000071

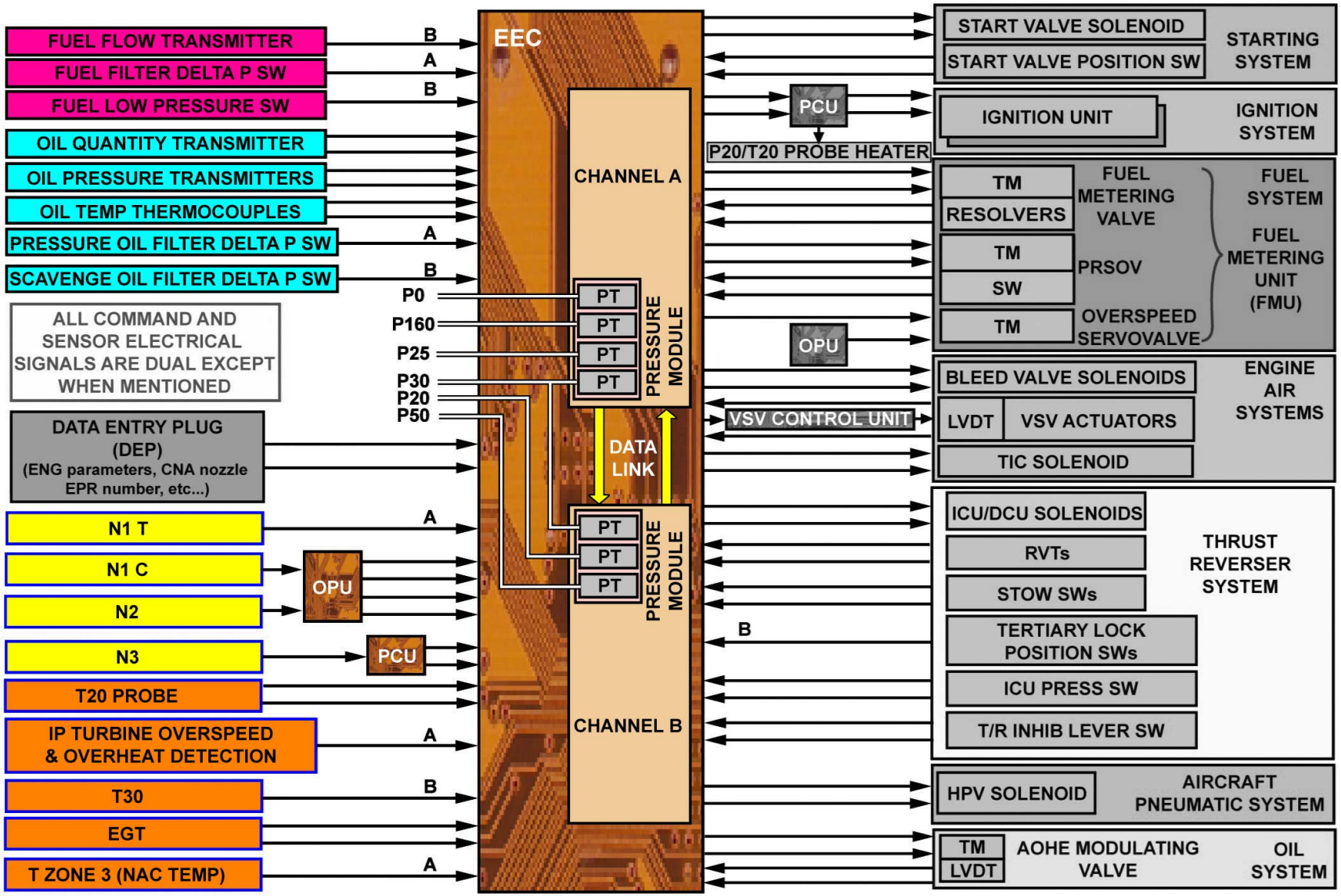

EEC - ENGINE INTERFACE - ENGINE PARAMETER INPUTS FOR CONTROL, MONITORING AND INDICATION

G7508471 - G3NT1T0 - FM70DA000000071

This Page Intentionally Left Blank

G7508471 - G3NT1T0 - FM70DA000000071

FADEC D/O (3)

EEC - ENGINE INTERFACE (continued)

PRESSURE MODULE

The pressure module is installed within the EEC and is divided into two parts, one for each channel. Pressure lines are connected to the pressure module internal pressure transducers and sent to both EEC channels internally.

The EEC uses the following pressure signals: :

- P0 - Atmospheric static pressure for engine control,
- P20 - Fan inlet pressure for EPR calculation,
- P160 - Fan outlet pressure for condition monitoring,
- P25 - HP compressor inlet pressure for condition monitoring,
- P30 - HP compressor outlet pressure for engine control,
- P50 - LP turbine outlet pressure for EPR calculation.

G7508471 - G3NT1T0 - FM70DA000000071

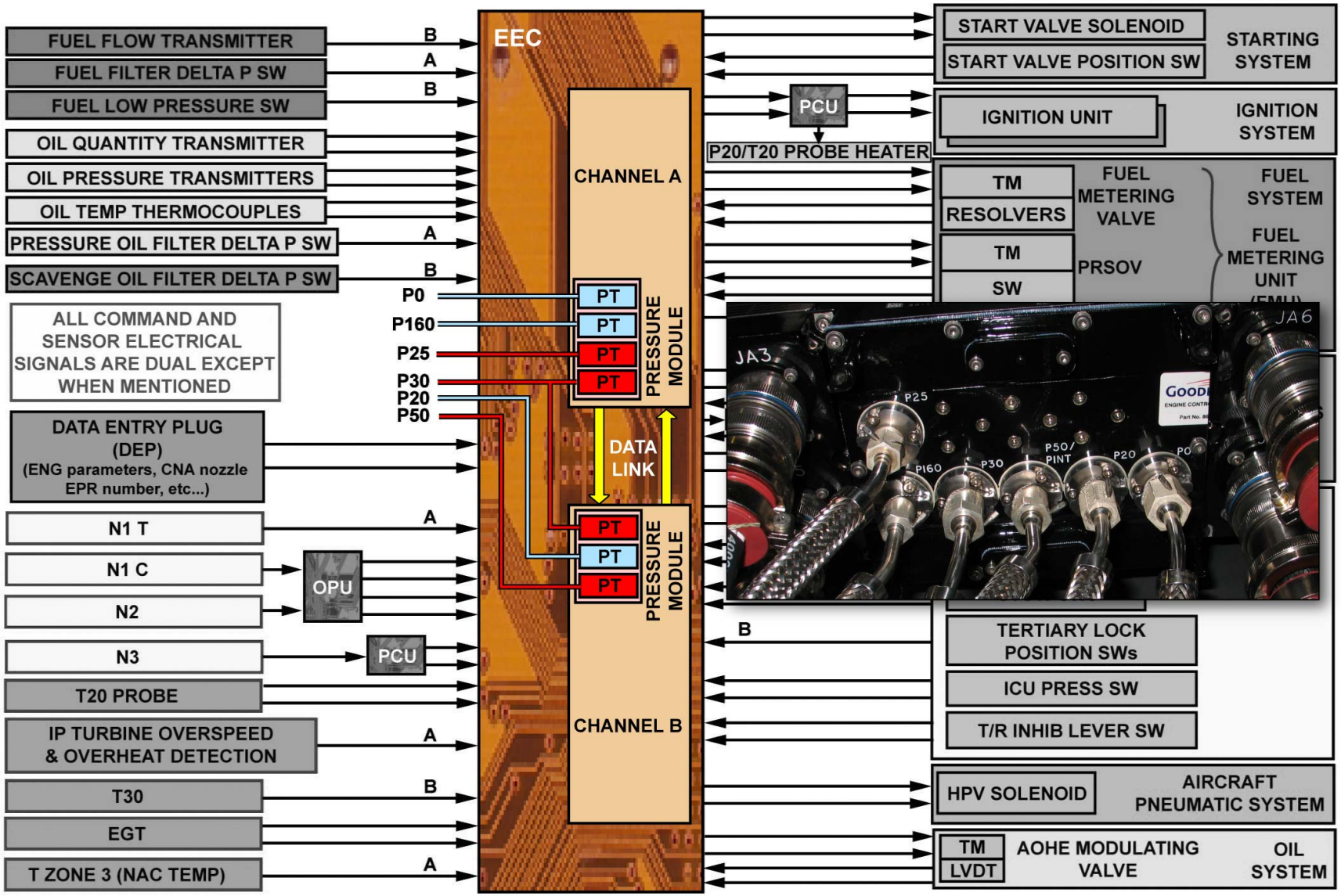

EEC - ENGINE INTERFACE - PRESSURE MODULE

G7508471 - G3NT1T0 - FM70DA00000071

FADEC D/O (3)

EEC - ENGINE INTERFACE (continued)

DATA ENTRY PLUG

The Data Entry Plug (DEP) is a dual channel serial memory device supplying storage for engine specific performance and configuration information. The DEP includes a plug and housing, which is fastened to the engine by a lanyard.
Two EEPROM (Electrically Erasable Programmable Read Only Memory) devices are located inside the plug, one EEPROM being allocated to each of the two channels of the EEC.
Both DEP EEPROMs are programmed with identical data:
- Engine serial number: The EEC needs to know which engine is mounted on,
- Ratings/Bump: All data related to the available ratings and bump are stored in the EEC and the DEP index is used only as a means of selection,
- EPR trim: The EEC trims the value of measured EPR in order to make every engine of a particular built standard appear identical to the aircraft,
- EGT trim: The actual EGT limit allowed by the certification authorities may vary over the life of an engine project due to changes of turbine entry temperature clearance and/or due to engine modifications. However to reduce pilot confusion, all Trent 500 engines will appear to have the same red line EGT on the ECAM,
- Engine standard,
- Intermix/retrofit: Enables different standards of engine to be used on the same aircraft and operates to the same rating,
- Fan stall index (provision): The EEC contains provision for software to detect, annunciate and avoid fan stall events,
Idle point trim: To enable trimming of the engine idle speeds for minimum modulated idle and approach idle requirements.

NOTE: The engine F/H and F/C data are not stored in the DEP. After engine replacement they have to be updated manually via the ACMS "SPECIAL FUNCTION/REPROGRAMMING" menu (AMM 31-36-00).

The EEC reads the DEP content during power-up test on ground and does the validation checks on the download data. The data is then compared to separate copies stored in the Non-Volatile Memory (NVM) of both EEC channels. If the DEP data differs from the NVM data, and there were no faults detected, then the EEC updates its NVM with this new data.
The programming of the DEP requires a dedicated programmer. It is also used to read or erase the contents of the DEP.

G7508471 - G3NT1T0 - FM70DA000000071

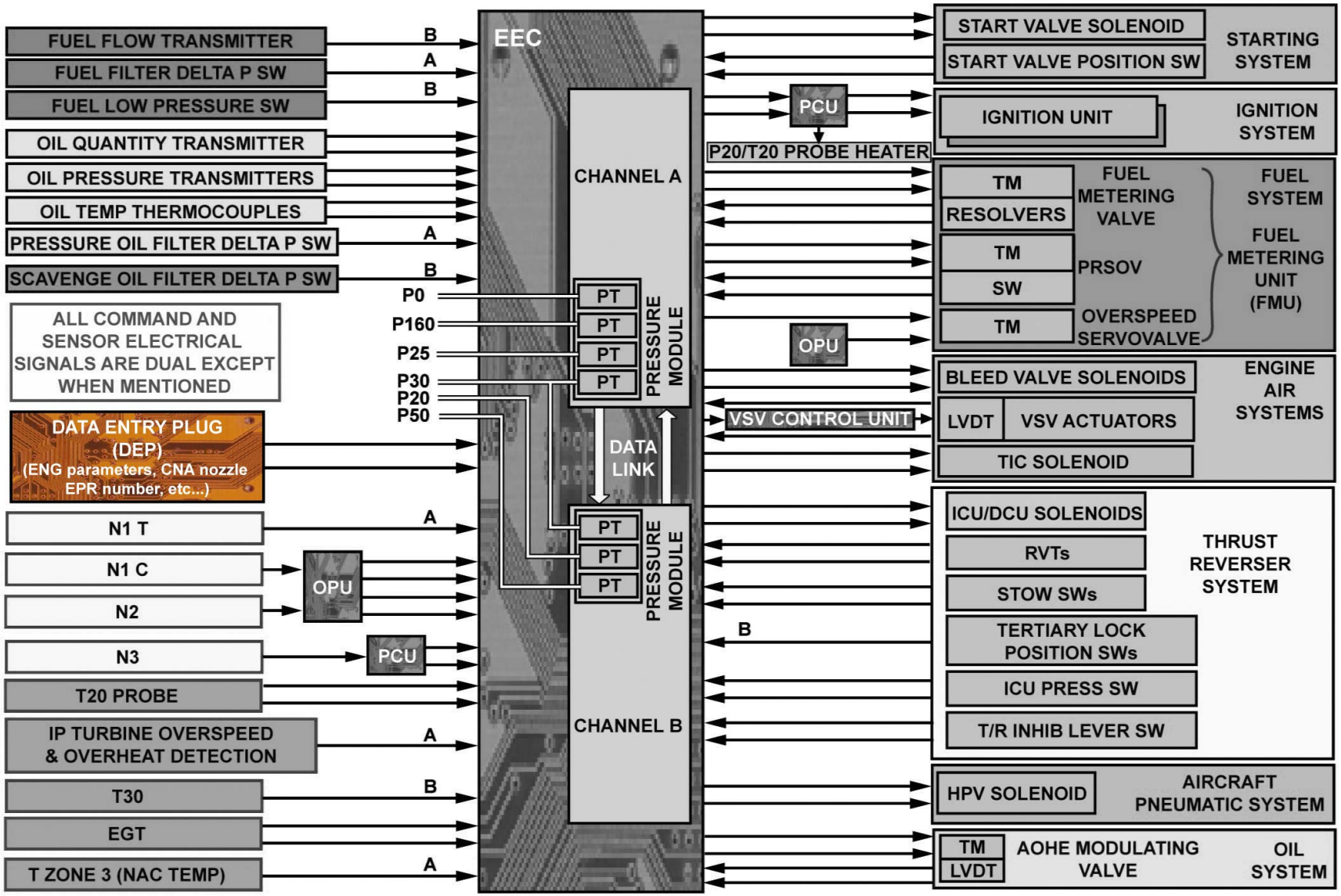

EEC - ENGINE INTERFACE - DATA ENTRY PLUG

G7508471 - G3NT1T0 - FM70DA00000071

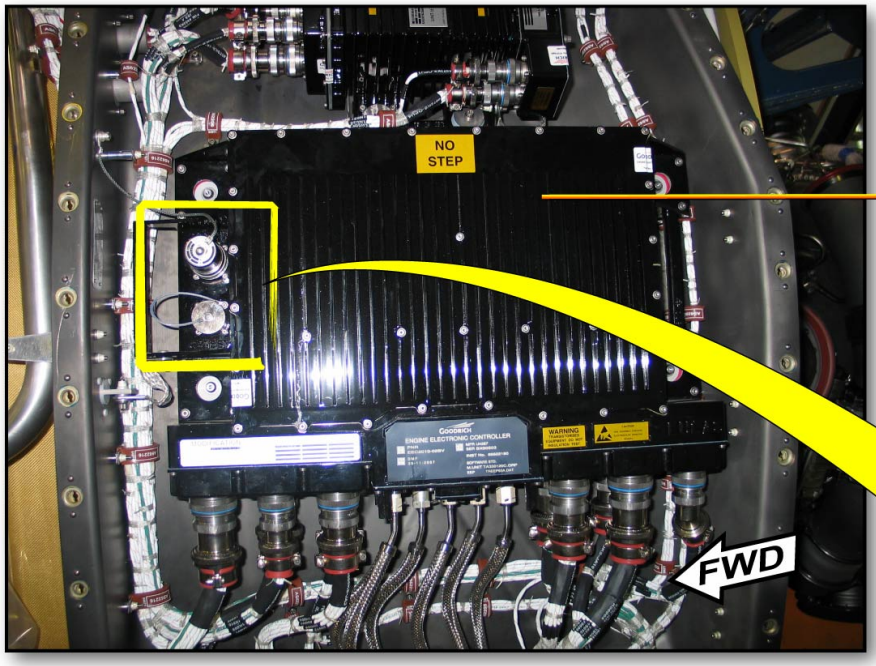

LEFT VIEW ENGINE

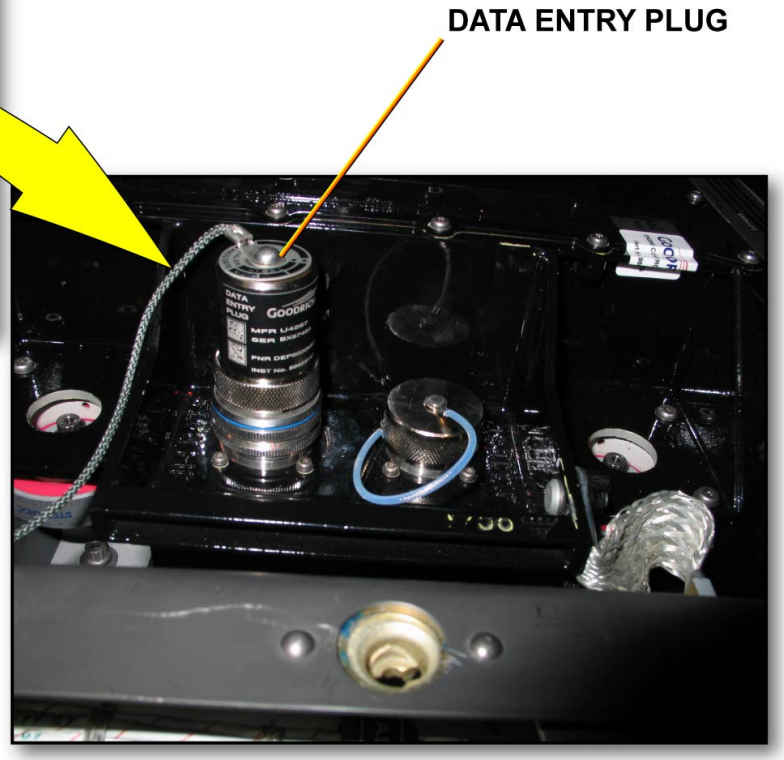

INFORMATIONS STORED IN THE DEP:
- EPR TRIM
- CNA EPR NUMBER
- ENGINE RATING SELECTION
- EGT TRIM
- ENGINE SERIAL NUMBER
- ENGINE INTERMIX
- FAN STALL INDEX
- ENGINE BUILD STANDARD
- IDLE TRIM

EEC - ENGINE INTERFACE - DATA ENTRY PLUG

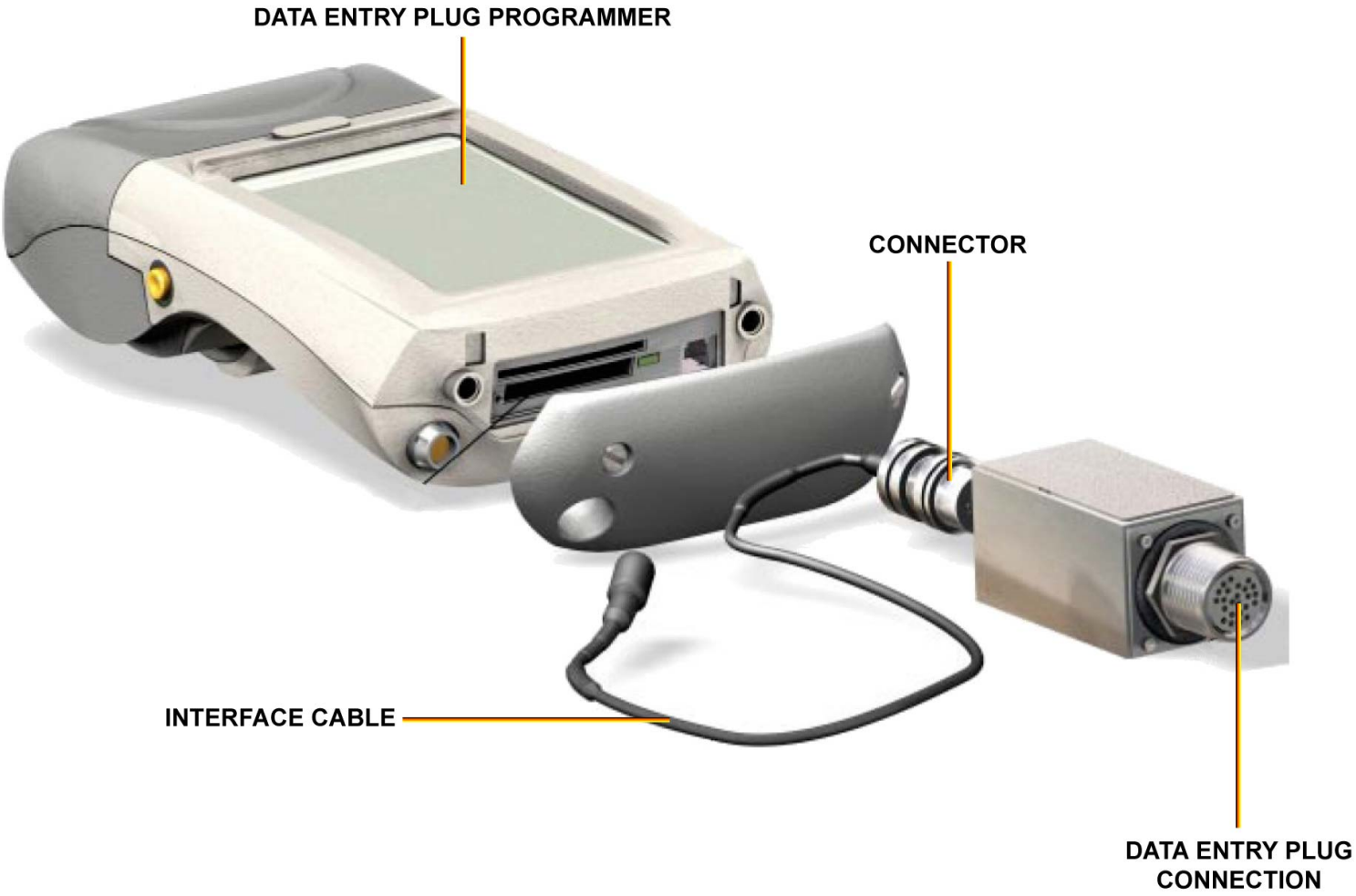

EEC - ENGINE INTERFACE - DATA ENTRY PLUG

G7508471 - G3NT1T0 - FM70DA000000071

FADEC D/O (3)

EEC - AIRCRAFT INTERFACE

The FADEC system interfaces with A/C systems and cockpit controls. The EEC receives and sends digital, discrete and analog data. There are two methods of data exchange between the FADEC (EEC) and the aircraft. Essential data exchange is DIRECT from the aircraft system to the EEC. All other data exchange is through the Engine Interface and Vibration Monitoring Unit (EIVMU). The EIVMU, installed in the avionics bay, concentrates both digital and discrete signals from the cockpit and other computers to communicate with the EEC via a digital bus.

DIRECT INPUT TO EEC

Each channel of the EEC has inputs from Air Data and Inertial Reference Units (ADIRU 1 & 2). Each ADIRU supplies data to both channels of EEC 1 and EEC 2.
Each EEC channel receives digital data buses from two ADIRUs, which supply:
- corrected static pressure signals (PS),
- total air temperature signals (TAT),
- total air pressure signals (PT).

Throttle control lever inputs are used for manual engine control. Two mechanically coupled resolvers in the Thrust Control Unit (TCU) monitor the angular position of the throttle control lever. . These signals are the Throttle Resolver Angle (TRA).
The EEC supplies the resolver excitation current and the TRA signals are directly hardwired from the resolvers to both channels of the EEC creating a closed loop system. The A/THR instinctive disconnect pushbutton switch on the throttle control levers generates a discrete signal which is also hardwired to the EEC.
The Bleed Monitoring Computer (BMC) sends the HPV closure command discrete signal to the EEC channels A & B through a relay. BMC1 signals EEC 1 and BMC2 signals EEC 2.

G7508471 - G3NT1T0 - FM70DA000000071

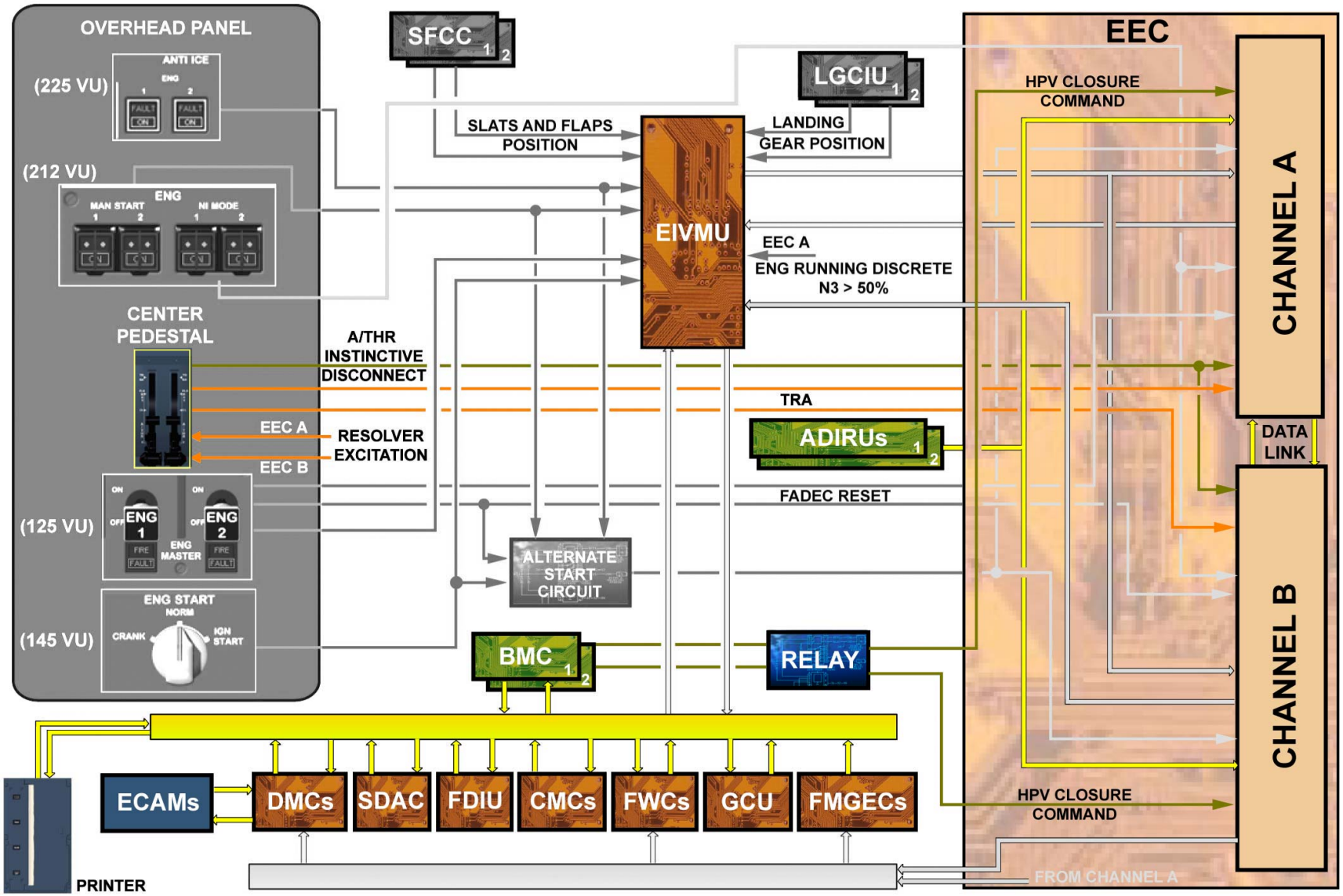

EEC - AIRCRAFT INTERFACE - DIRECT INPUT TO EEC

FADEC D/O (3)

EEC - AIRCRAFT INTERFACE (continued)

INPUT TO EEC FROM THE EIVMU

The EIVMU, installed in the avionics bay, interfaces with various A/C computers and controls and with the EEC for the following main functions:
- transmission of cockpit panel and A/C computer data to the EEC,
- internal processing of A/C status signals needed by the EEC,
- control of A/C electrical supplies to the EEC,
- engine to engine segregation,
- internal processing of engine status signals needed by A/C systems,
- engine vibration signal processing and monitoring.

The following categories of A/C data are transmitted by the EIVMU to the EEC:
- general A/C data,
- idle setting data,
- engine starting data,
- A/THR function data,
- maintenance function data.

In normal operation, the EEC uses inputs from the ENGine START, ENGine MASTER, ENGine MANual START and ANTI ICE panels to control engine starting, continuous ignition and engine shut down. These switch positions are transmitted from the cockpit to the EEC on the EIVMU digital data bus. These cockpit panels have their selectors and pushbuttons hardwired to the EIVMU. The different positions of these rotary selectors and pushbuttons are sent to the EIVMU, which sends the related signals to the EEC through an ARINC data bus connection.

The main source of ENGine MASTER switch position for the EEC is the EIVMU. In case of non-validity of the ENGine MASTER switch position information contained in the EIVMU bus, the EEC can use a hardwired discrete which is also used as a "reset" input. The EEC uses Engine Pressure Ratio (EPR) as the main engine control parameter. If the EEC is unable to calculate the EPR, the active channel selects automatically the N1 control mode. . The operator is then advised to select both engines to the N1 control mode. The ENGine N1 MODE signal is hardwired to the EEC.

To initiate the engine control functions when the EIVMU data is not available, the EEC receives a hardwired alternate start circuit discrete signal. The EEC via the EIVMU receives the SFCCs and LGCIUs signals.

The Slat/Flap Control Computers (SFCCs) send the slat and flap position to the EEC and the Landing Gear Control and Interface Units (LGCIUs) send the landing gear position signal to the EIVMU, which sends it to both channels of the EEC via a digital bus.

G7508471 - G3NT1T0 - FM70DA000000071

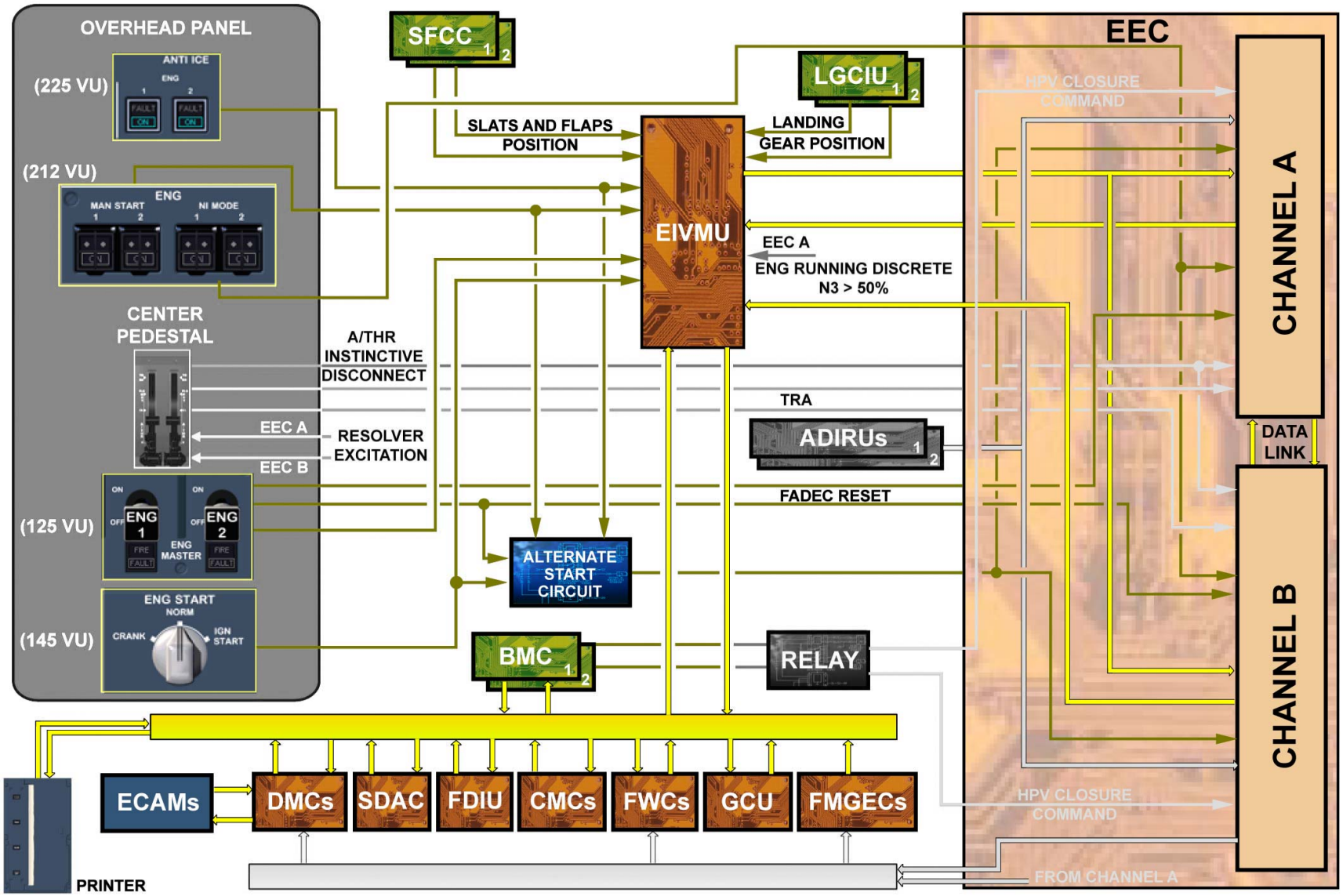

EEC - AIRCRAFT INTERFACE - INPUT TO EEC FROM THE EIVMU

FADEC D/O (3)

EEC - AIRCRAFT INTERFACE (continued)

EEC DISCRETE AND DIGITAL OUTPUT

The engine running hardwired discrete indicates to the A/C, via the EIVMU, whether or not the engine is running (N3>50%).
The EEC transmits data to the A/C systems through four high-speed digital busses. The information contained on the output busses include the following general items:
- engine rating parameter information,
- parameters used for engine control,
- FADEC system maintenance data,
- engine condition monitoring parameters,
- EEC status and fault information,
- propulsion system status and fault information.

The EEC digital outputs are received by the following A/C computers:
- EIVMU,
- Flight Warning Computers (FWCs),
- Display Management computers (DMCs),
- Flight Management Guidance and Envelope Computers (FMGECs).

G7508471 - G3NT1T0 - FM70DA000000071

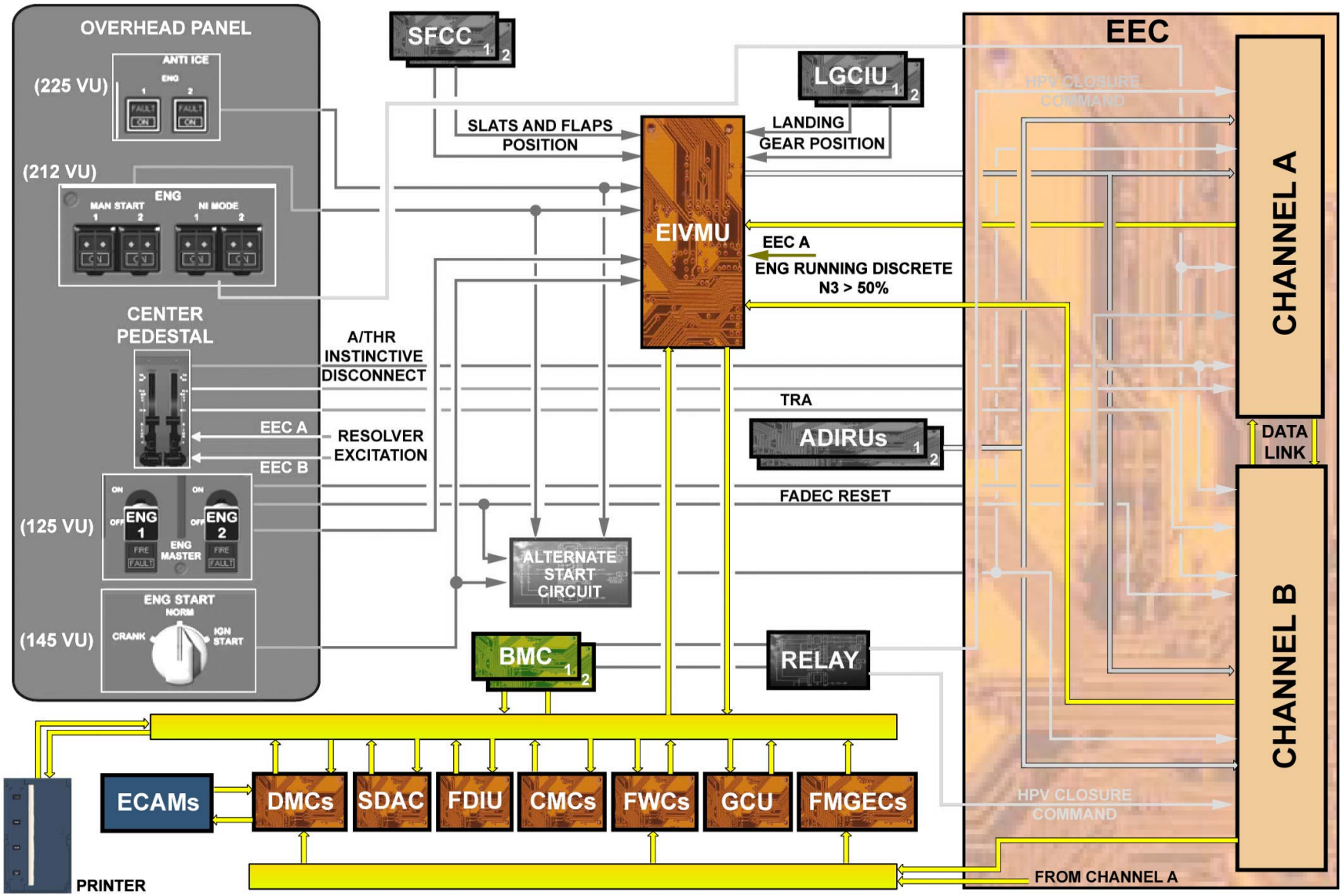

EEC - AIRCRAFT INTERFACE - EEC DISCRETE AND DIGITAL OUTPUT

EIVMU INTERFACES (3)

EEC INTERFACES

The Engine Interface and Vibration Monitoring Unit (EIVMU) is linked to the Engine Electronic Controller (EEC) by one output bus and by two identical input buses which carry exactly the same information. The EIVMU takes its information automatically from the "better" bus in case of transmission problems. The EIVMU controls the power cut-off for EEC, the ignitors and the thrust reverser Directional Control Valve (DCV). The EIVMU interfaces signals and data between aircraft computers, cockpit panels and EEC (display data, monitoring data for maintenance use).

ECS INTERFACE

The EIVMU receives one input bus from the Environmental Control System (ECS). This bus gives information from the active channel of the Zone Controller (ZC) (lane 1 or lane 2). The ECS determines the various air bleed configurations according to the demands of the air conditioning, wing anti-ice and nacelle anti-ice systems. This information is transmitted by the EIVMU to the EEC to compute the bleed air demand required at the engine customer bleed ports.

ENGINE START CONTROL

The EIVMU receives all starting ignition and cranking signals from the cockpit engine control panels and sends them to the EEC in digital format through its ARINC buses. The control panels send the following signals to the EIVMU:
- ENG START mode selector position,
- ENG MASTER switch position,
- MAN START P/B selection.

OTHER INTERFACES

The EIVMU also receives and generates signals for control and monitoring purposes from and to various aircraft systems.

DIGITAL INPUTS

The EIVMU receives digital inputs from:
- Flight Control Unit (FCU) for Auto Flight System (AFS) and A/THR signals,
- Central Maintenance Computer (CMC) for interrogation through MCDU.

DISCRETE INPUTS

The EIVMU receives discrete inputs from:
- Throttle Control Unit (TCU)(reverser condition) for deployment permission,
- Slat Flap Control Computer (SFCC) for slat/flat lever position and approach idle selection,
- Landing Gear Control and Interface Unit (LGCIU) for flight/ground logic,
- low oil pressure switch for low oil pressure on ground discrete output processing,
- engine running (N3 above 50%) signal from EEC.

ANALOG INPUTS

The EIVMU receives analog inputs from the engine bleed regulated pressure transducer.

VIBRATION PROCESSING

The EIVMU receives analog inputs for vibration processing from:
- fan trim balance probe for N1 "once per revolution" signal,
- Remote Charge Converter (RCC) for vibration transducers (dual accelerometers) signals.

G7508471 - G3NT1T0 - FM70DI000000071

DIGITAL OUTPUTS

The EIVMU sends digital outputs to:
- Bleed Monitoring Computer (BMC) for ECS interface,
- Data Management Unit (DMU) for Aircraft Condition Monitoring System (ACMS),
- Flight Data Interface Unit (FDIU) for the flight data recording system,
- System Data Acquisition Concentrator (SDAC) for the Electronic Instrument System (EIS),
- Display Management Computer (DMC) for the EIS,
- CMC.

DISCRETE OUTPUTS

The EIVMU sends discrete outputs for:
- engine running to the Radio Altimeter (RA), Weight and Balance System (WBS), electric hydraulic pump selection, Ram Air Turbine (RAT) activation, alternate start discrete, limitation flight control change speed, electrical power cut-off,
- Auxiliary Power Unit (APU) boost: to the Electronic Control Box (ECB) to obtain main engine start bleed mode,
- pack valve closure: pack flow control valve closure during engine start,
- reverser deployment authorized: the permission switch supplies the Direction Control Valve (DCV),
- Pressure Raising and Shut-Off Valve (PRSOV) closed: status sent to the ECS Zone Controller (ZC) for bleed air status processing,
- oil low pressure on ground: Avionics Equipment Ventilation Computer (AEVC), Flight Control Data Concentrator (FCDC), Probe Heat Computer (PHC), Window Heat Computer (WHC), Cabin Intercommunication Data System (CIDS), Digital Flight Data Recorder (DFDR), rain repellent, nacelle anti-ice fault-light inhibition, Cockpit Voice Recorder (CVR),
- Throttle Resolver Angle (TRA) in take-off position: signal for ECS pack ram air inlet closure and Cabin Pressure Controller (CPC) pre-pressurization sequence.

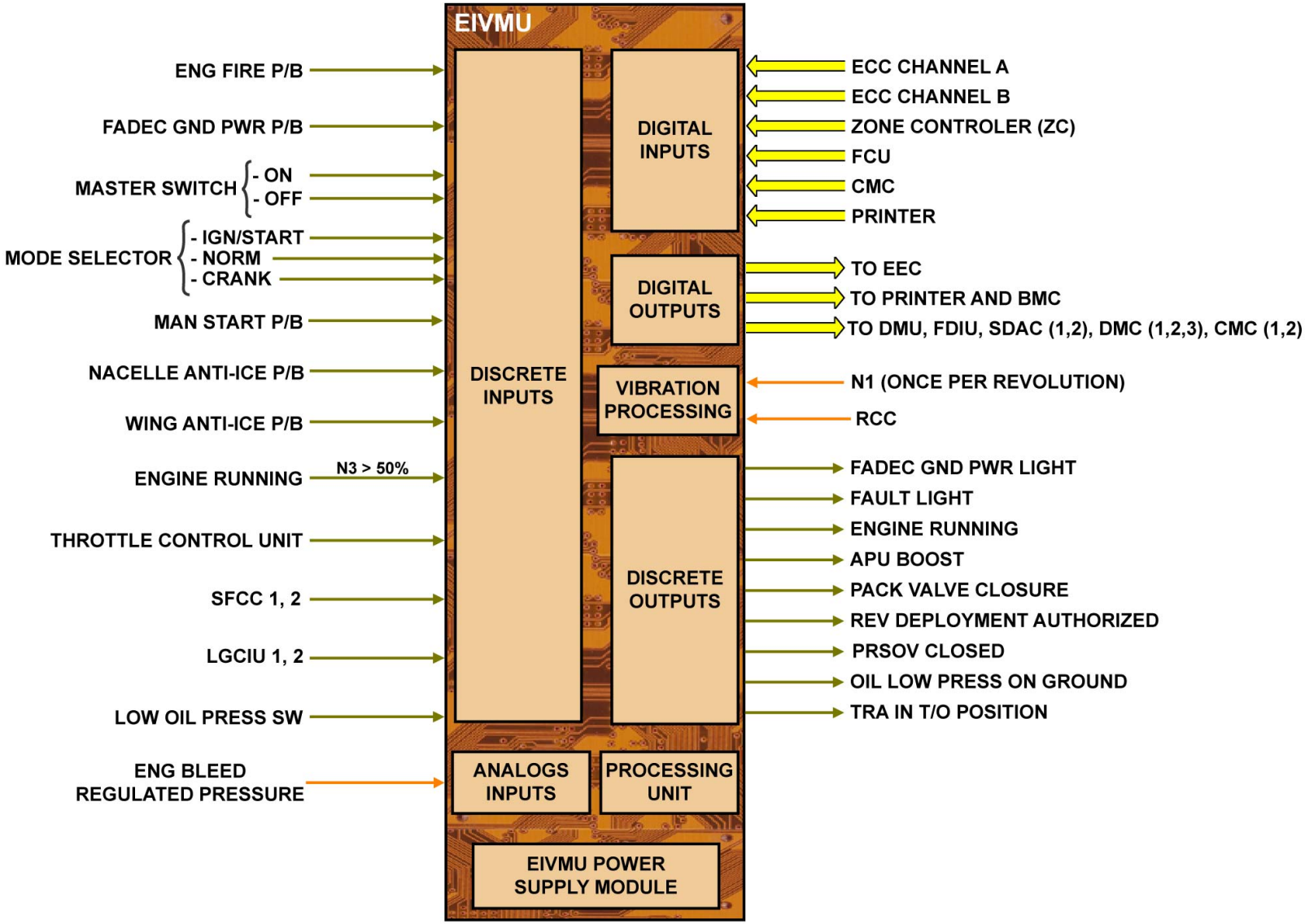

EEC INTERFACES ... OTHER INTERFACES

G7508471 - G3NT1T0 - FM70DI000000071

This Page Intentionally Left Blank

G7508471 - G3NT1T0 - FM70DI000000071

EIVMU INTERFACES (3)

CMS INTERFACE

The EEC interfaces with the CMCs through the EIVMU for all fault reporting and maintenance operations.

G7508471 - G3NT1T0 - FM70DI000000071

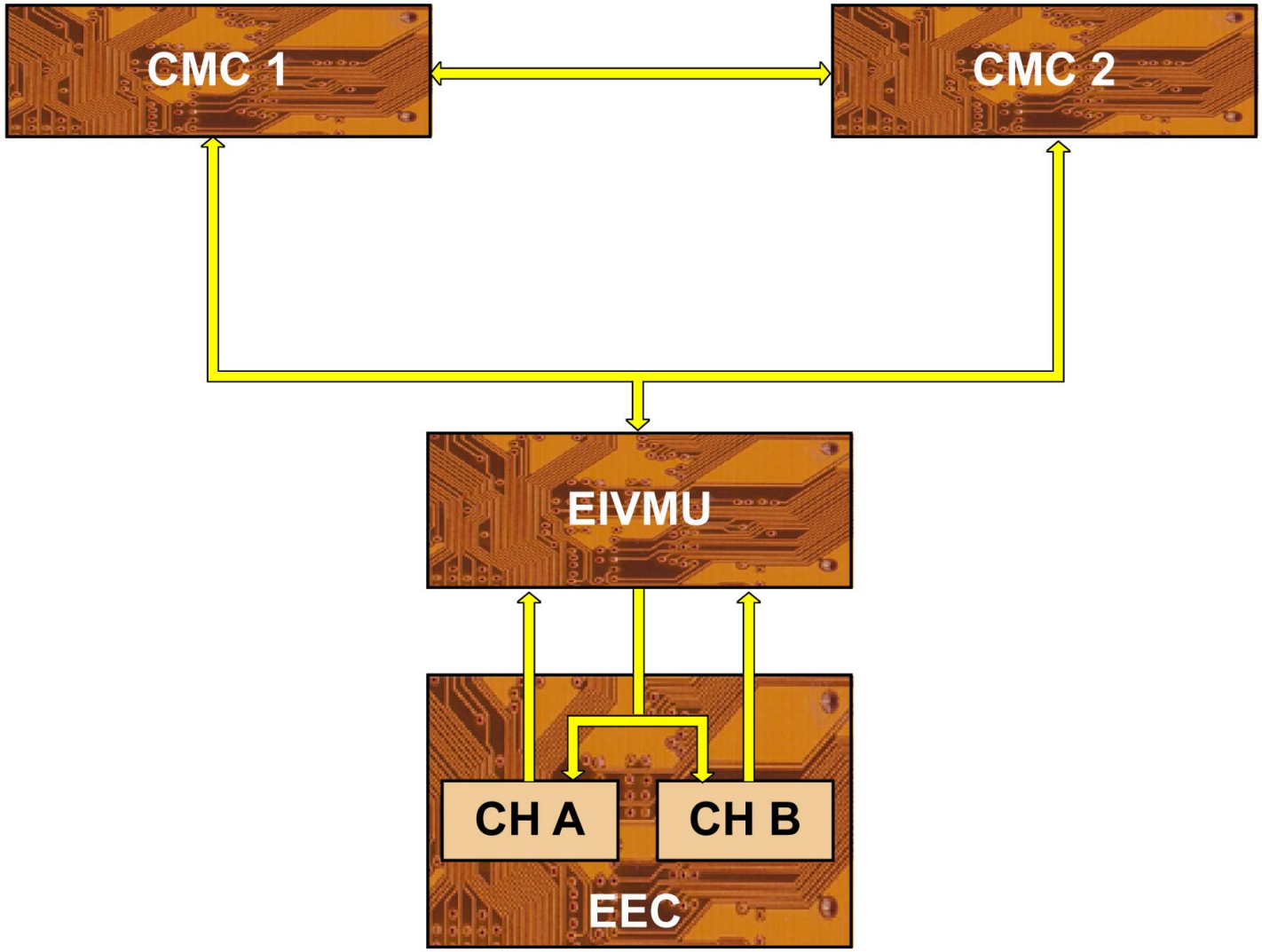

CMS INTERFACE

EIVMU INTERFACES (3)

EIVMU POWER SUPPLY MODULE

The EIVMU power supply module provides 115 VAC from A/C electrical network to the PCU for EEC and ignition system powering. The EIVMU also provides 28 VDC for the thrust reverser DCV. The power supply module is part of the EIVMU box and is still operational even if the EIVMU fails or is not powered; it contains the switching for FADEC powering and de-powering functions.

G7508471 - G3NT1T0 - FM70DI000000071

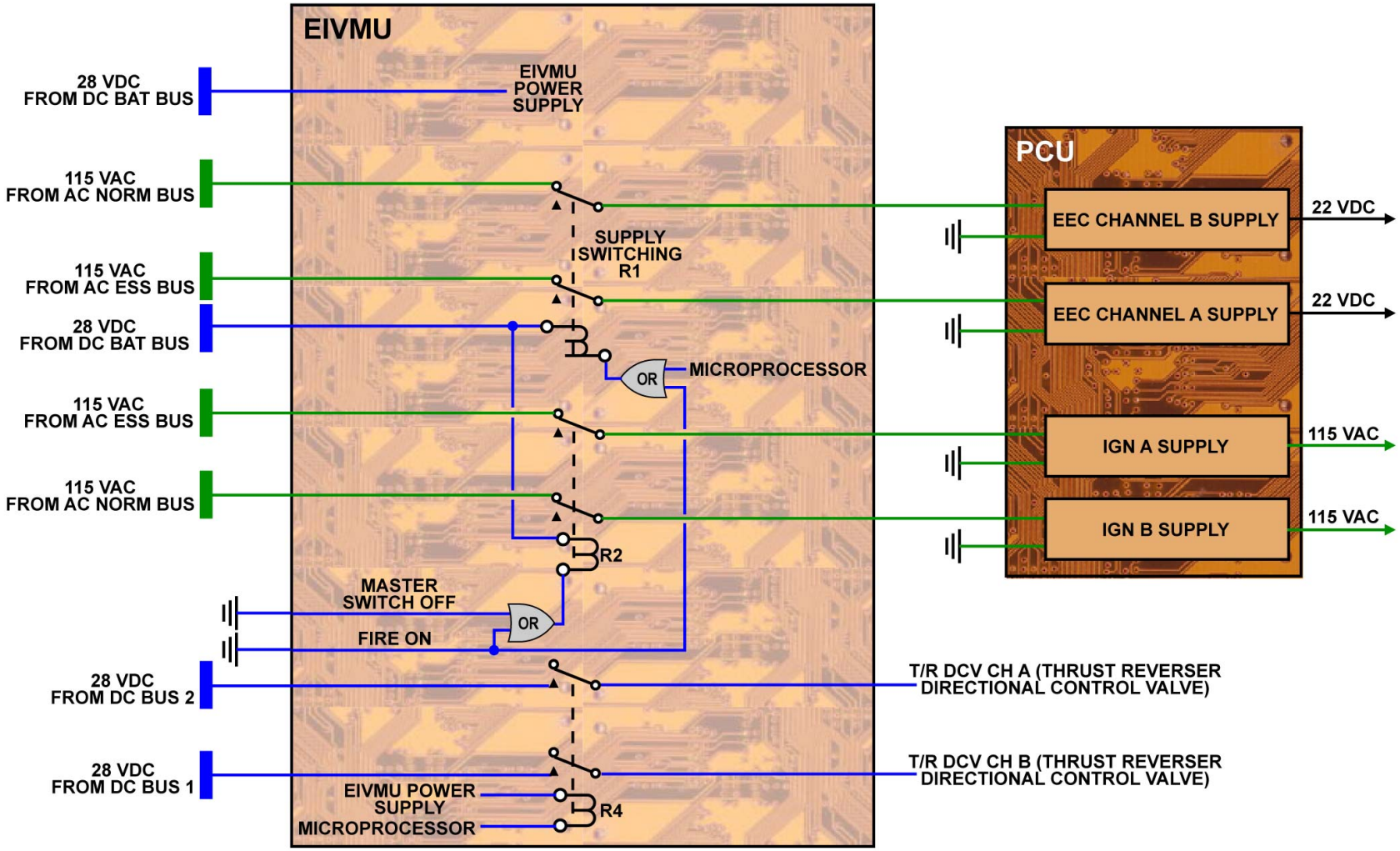

EIVMU POWER SUPPLY MODULE

G7508471 - G3NT1T0 - FM70DI000000071

EIVMU INTERFACES (3)

EIVMU FAILURE

An EIVMU failure is identified by the "ENG 1 (2) EIU FAULT" level 2 ECAM warning. The consequences of this failure are shown in the screen.

G7508471 - G3NT1T0 - FM70DI000000071

IMPACTED SYSTEM OR SUB-SYSTEM	COCKPIT EFFECT	MAINTENANCE IMPACT
	ENG1(2) EIU FAULT T.O THR: TOGA ONLY HI IDLE	A/C DISPATCH ALLOWED WITH ONE EIVMU INOP PROVIDED NO OPERATION IS PREDICTED ON THRUST REVERSER USE
NO WET MOTORING		ONLY DRY MOTORING POSSIBLE
NO EEC INTERROGATION THROUGH MCDU ENG MENU		NO PROMPT AVAILABLE IN FRONT OF EEC 1(2) CHANNEL A AND CHANNEL B
FADEC PERMANENTLY POWERED (RISK OF EEC OVERHEAT)	PERMANENT DISPLAY OF ENG1(2) PRIMARY PARAMETERS	PULL FADEC CHANNEL A AND CHANNEL B C/Bs
AUTO-THRUST INOP	A/THR	
IDLE POWER SET TO "APPROACH IDLE"	ENG1(2) HI IDLE	
NO FLEX T/O, NO DERATED T/O	T.O THR: TOGA ONLY	
NO MANUAL START	ENG1(2) AUTOSTART ONLY	
NO VIBRATION DISPLAY	XX	
THRUST REVERSER INOP	REV 1(2)	NO DEACTIVATION REQUIRED !!
NO PACK RAM AIR INLET CLOSURE + NO LOW FLOW SELECTION AT TOGA	BEFORE T.O PACK 1 OFF PACK 2 OFF BOTH PACKS AVAIL IN FLT	

EIVMU FAILURE

G7508471 - G3NT1T0 - FM70DI000000071

FADEC POWER SUPPLY D/O (3)

GENERAL

The primary source of Engine Electronic Controller (EEC) electrical power when the engine is in operation, is the EEC dedicated alternator. For ground maintenance, engine start or loss of dedicated alternator power, an alternative stand-by power source regulated by the Power Control Unit (PCU) is supplied from the A/C electrical network.

EEC DEDICATED ALTERNATOR

The EEC dedicated alternator has two parts. A rotor with a set of permanent magnets is driven directly by the gearbox. The stator housing is attached to the gearbox case and houses five separate windings.
The dedicated alternator supplies two separate three-phase AC outputs that are converted to DC by the PCU and sent to the EEC, one supply per channel. The dedicated alternator also supplies two separate one-phase power outputs to the Overspeed Protection Unit (OPU). One of these outputs is a spare and could be connected in place of the other winding if it fails.
The dedicated alternator is installed on the forward face of the gearbox. It is also used as the N3 speed sensor and sends N3 signals to both EEC channels.

POWER CONTROL UNIT

The primary function of the PCU is to supply each EEC channel with a stable 22 VDC regulated input. Initial power coming from:
- three-phase supply from the EEC dedicated alternator (during engine operation),
- 115 VAC supply from the A/C electrical buses (during ground maintenance, engine start or failure of the alternator).
Each channel of the dual channel PCU controls the switching of the electrical power source. During engine operation with a fully serviceable alternator, the A/C network power supply is isolated by the PCU.

If a failure of the alternator occurs, the PCU automatically switches to the A/C network power supply.

G7508471 - G3NT1T0 - FM70DE000000071

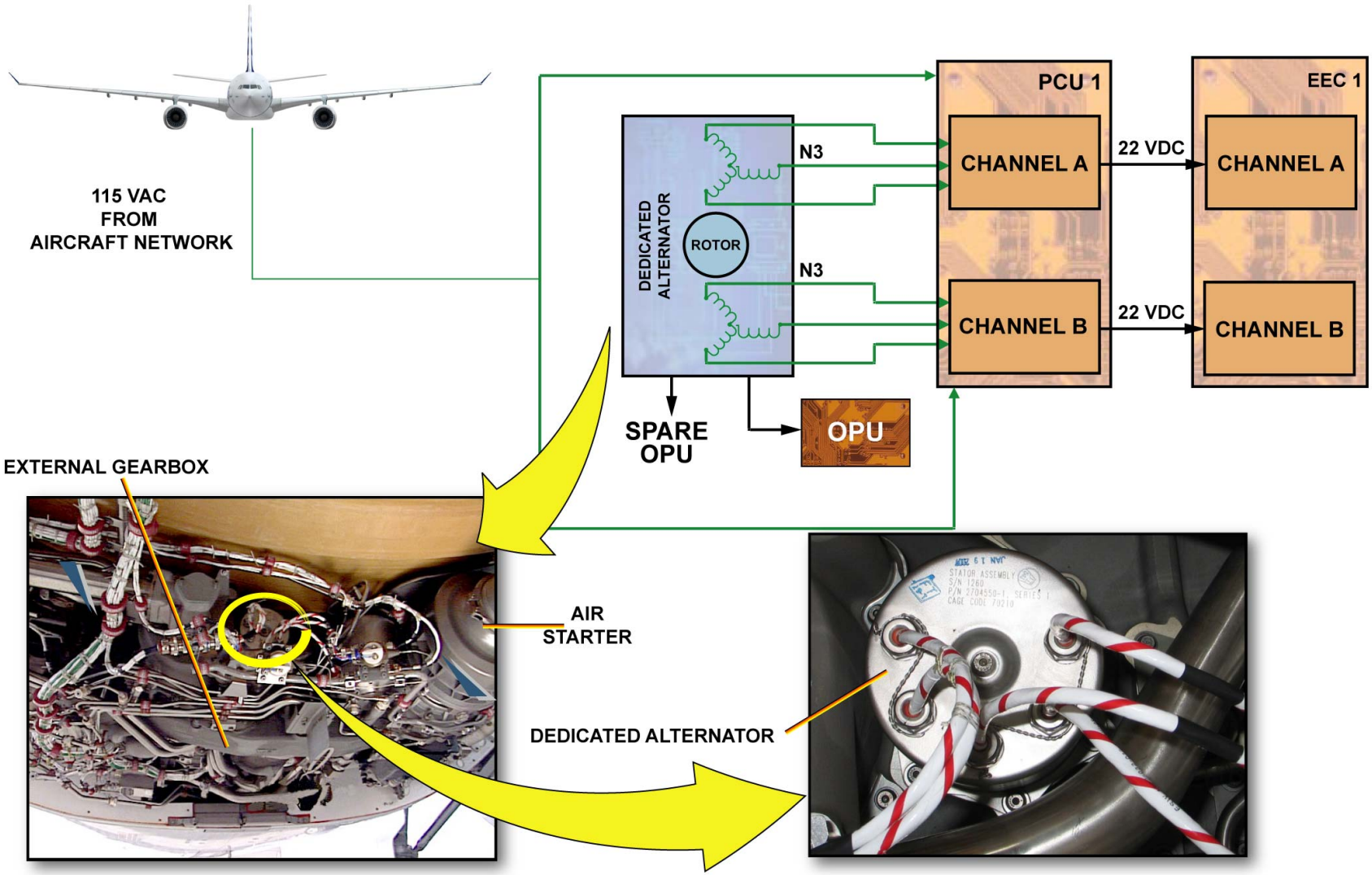

GENERAL ... POWER CONTROL UNIT

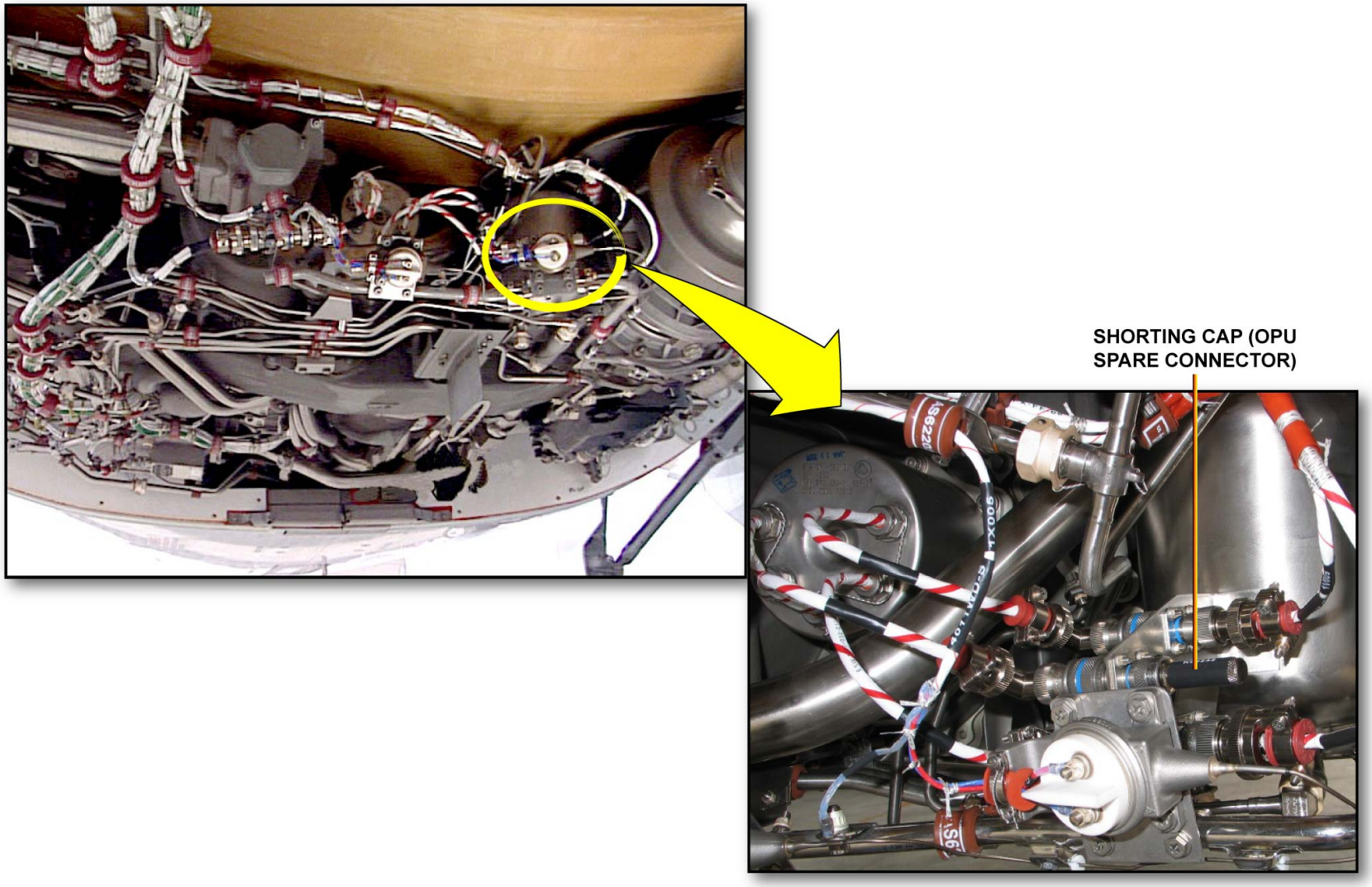

GENERAL ... POWER CONTROL UNIT

G7508471 - G3NT1T0 - FM70DE000000071

This Page Intentionally Left Blank

G7508471 - G3NT1T0 - FM70DE000000071

FADEC POWER SUPPLY D/O (3)

FADEC POWER SUPPLY SWITCHING BY THE EIVMU

The EIVMU controls the supply of 115 VAC power to the EEC. The control logic is based on the cockpit engine control inputs,

AIRCRAFT POWER-UP

At A/C power-up, both EECs are powered for 15 minutes allowing engine parameters to be checked before starting.

ENGINE MODE SELECTOR

Both EECs are powered as soon as the mode selector is in IGN START or CRANK position. Setting the mode selector back to NORM cancels the power supply to both EECs.

ENGINE MASTER SWITCH

Setting the ENG MASTER switch to ON will power the associated EEC.
Setting the ENG MASTER switch back to OFF will cut off the power to the EEC after 15 minutes.

ENGINE FADEC GROUND POWER

If the ENG FADEC GND PWR switch is selected ON, the associated EEC will be powered for 5 minutes, or will remain powered as long as the interactive FADEC menu is active on MCDU.
If the ENG FADEC GND PWR is deselected, the power to the EEC is immediately cut off.

ENGINE FIRE PUSH-BUTTON

When the ENG FIRE P/B is released out, the A/C 115 VAC power supply to the related FADEC is cut-off by the associated EIVMU.

EIVMU FAILURE

If the EIVMU fails or is de-powered, the associated FADEC remains continuously supplied from the A/C network. Internally, the EIVMU contacts relax and allow 115 VAC power to be supplied to the PCU.

EEC POWERING N3 < 8 %

When N3 speed is below 8%, each EEC channel is independently supplied by the A/C 115 VAC power through its associated Engine Interface and Vibration Monitoring Unit (EIVMU). The 115 VAC is converted into VDC within the PCU and then sent to the EEC. PCU channel A is supplied from the AC ESSENTIAL BUS and PCU channel B from the AC NORMAL BUS.

EEC POWERING N3 > 8 %

As soon as the engine is running above 8% of N3, the dedicated alternator supplies the EEC through the PCU. To make sure that this is the only source used, the A/C 115 VAC power is isolated by the PCU switching control logic.

DEDICATED ALTERNATOR FAILURE

In case of loss of power supply to the EEC channel in control, an EEC channel change over will occur.
If both alternator power supplies are lost, the FADEC will be supplied by the A/C network through the EIVMU.

G7508471 - G3NT1T0 - FM70DE000000071

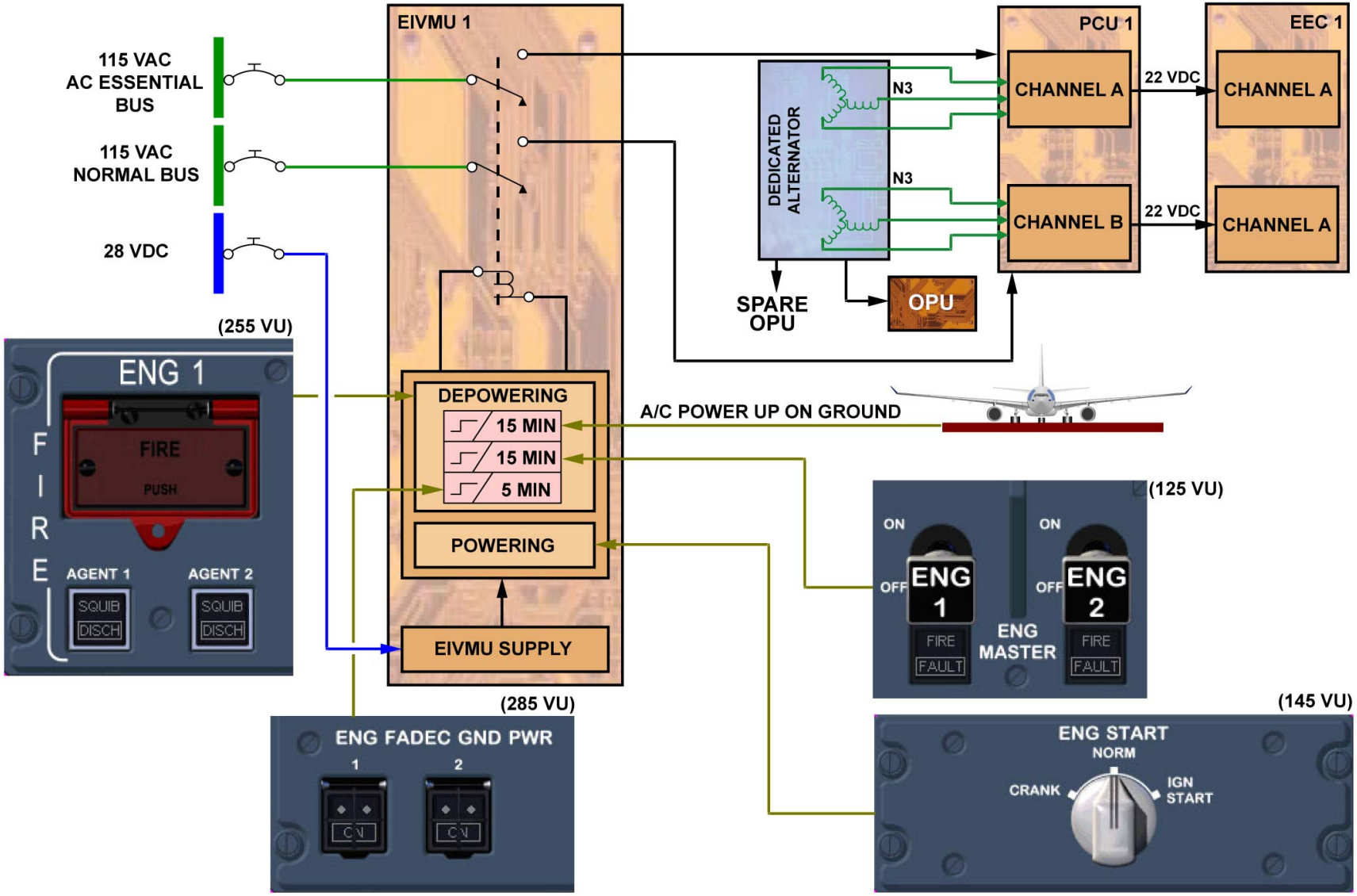

FADEC POWER SUPPLY SWITCHING BY THE EIVMU ... DEDICATED ALTERNATOR FAILURE

G7508471 - G3NT1T0 - FM70DE000000071

IGNITION AND STARTING D/O (3)

GENERAL

Engine starting, motoring and ignition sequences are selected by the Engine Electronic Controller (EEC) according to digital command inputs from the Engine Interface and Vibration Monitoring Unit (EIVMU). To achieve these functions, the following sub-systems are combined:
- starting,
- fuel,
- ignition.

G7508471 - G3NT1T0 - FM70DC000000071

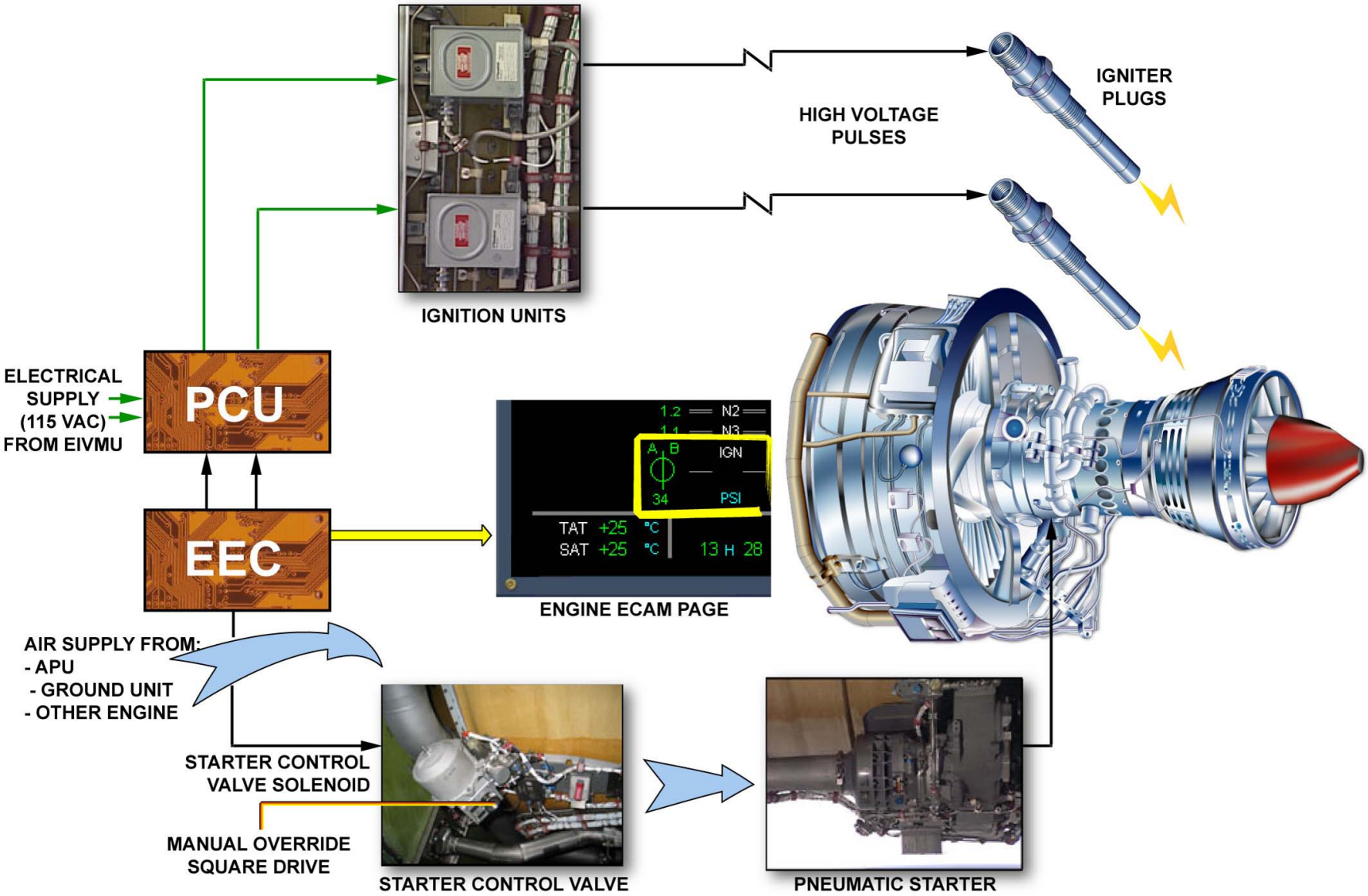

GENERAL

G7508471 - G3NT1T0 - FM70DC000000071

IGNITION AND STARTING D/O (3)

STARTING SYSTEM DESCRIPTION

The primary components of the engine pneumatic starting system are:
- the Starter Control Valve (SCV),
- the pneumatic starter.

The starting system uses air from a ground air supply, the APU or the other engine already started.

G7508471 - G3NT1T0 - FM70DC000000071

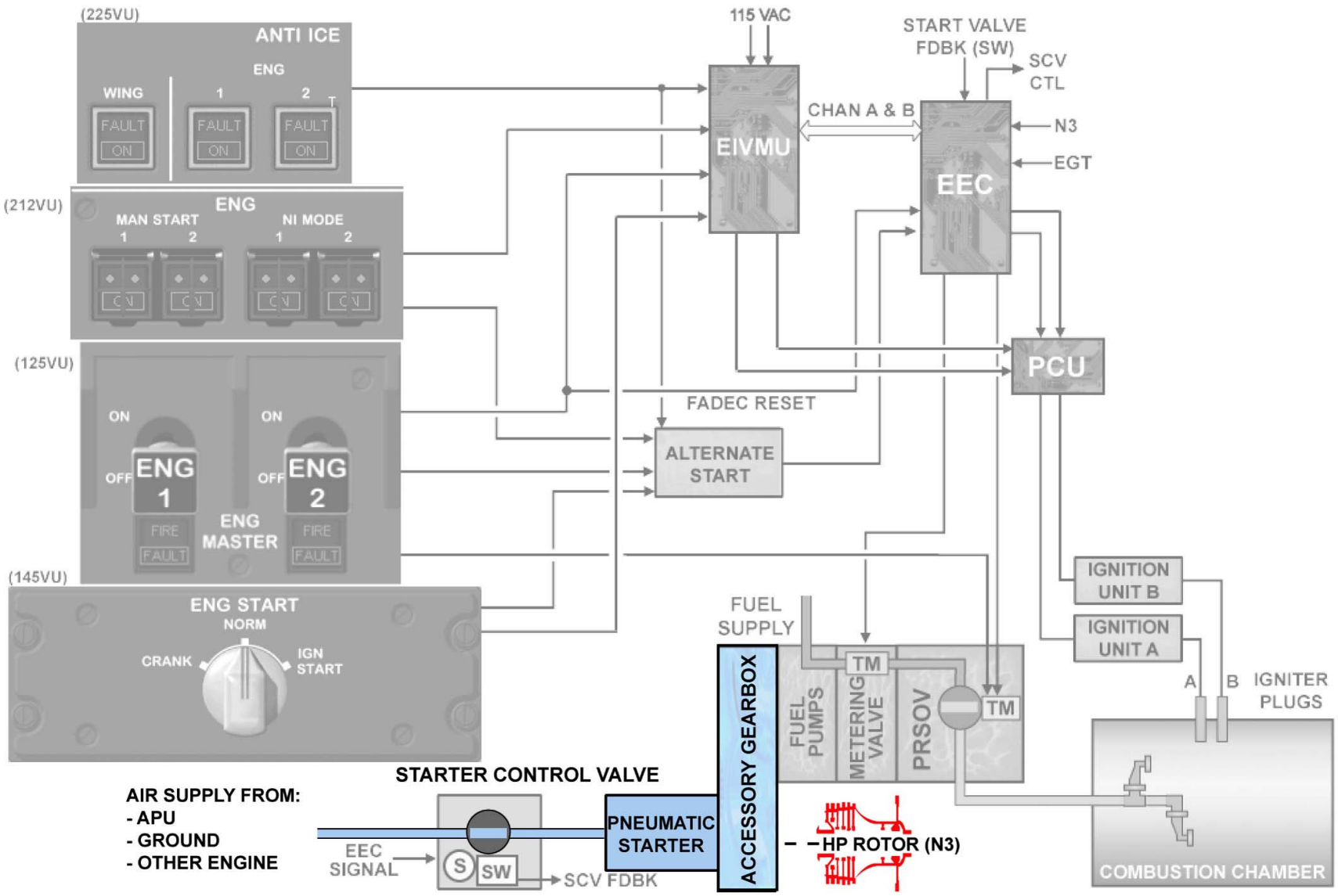

STARTING SYSTEM DESCRIPTION

G7508471 - G3NT1T0 - FM70DC000000071

IGNITION AND STARTING D/O (3)

STARTING SYSTEM DESCRIPTION (continued)

PNEUMATIC STARTER

The pneumatic starter is a pneumatically operated turbine installed on the gearbox by a Quick Attach Detach (QAD) adapter. The starter rotates the HP rotor (N3) through an external gearbox module input shaft.

An oil fill plug and an oil level overflow plug are installed on the starter case. An oil level sight glass is also installed on the starter case for oil level indication.

A drain plug with a Magnetic Chip Detector (MCD) is installed on the starter case lower surface.

The continuous operation of the pneumatic starter must be limited in accordance with the limits outlined in the AMM.

G7508471 - G3NT1T0 - FM70DC000000071

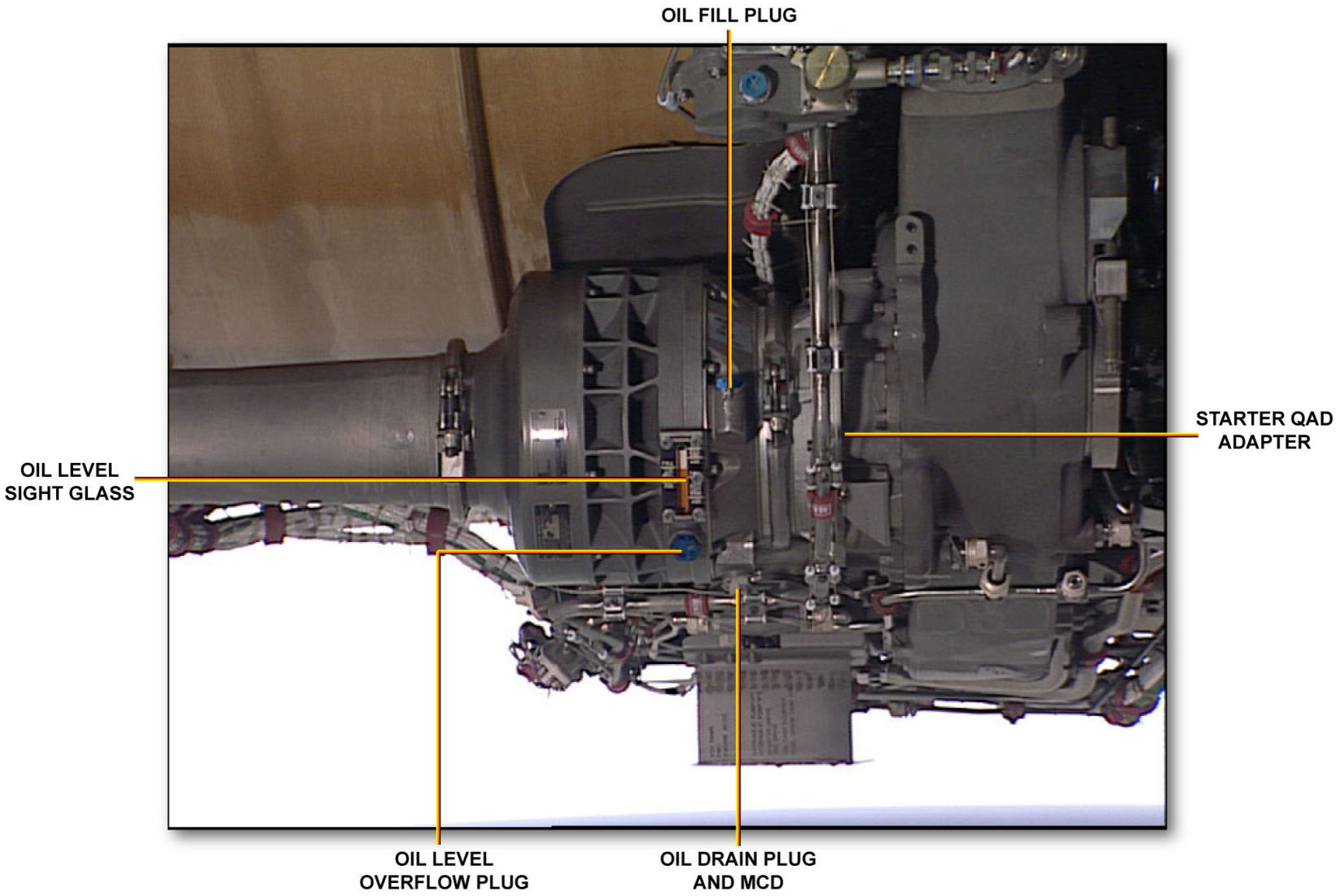

STARTING SYSTEM DESCRIPTION - PNEUMATIC STARTER

G7508471 - G3NT1T0 - FM70DC000000071

IGNITION AND STARTING D/O (3)

STARTING SYSTEM DESCRIPTION (continued)

STARTER CONTROL VALVE (SCV)

The Starter Control Valve (SCV) controls the airflow delivered to the pneumatic starter. The SCV is located on the lower LH side of the LP compressor case. The SCV is electrically controlled and monitored by the EEC and is pneumatically operated.
The primary components of the SCV are:
- a valve assembly which has a butterfly valve,
- an actuator assembly that transmits the movement to open and close the butterfly valve,
- a dual coil solenoid, controlled by electrical signals from the EEC.

The SCV has a square socket to get manual operation of the butterfly valve in case of SCV electrical control failure. It is accessible through an access door located on the left fan cowl door (it is not necessary to open the fan cowl doors). The valve position is given to the EEC by two microswitches, one for each EEC channel.

G7508471 - G3NT1T0 - FM70DC000000071

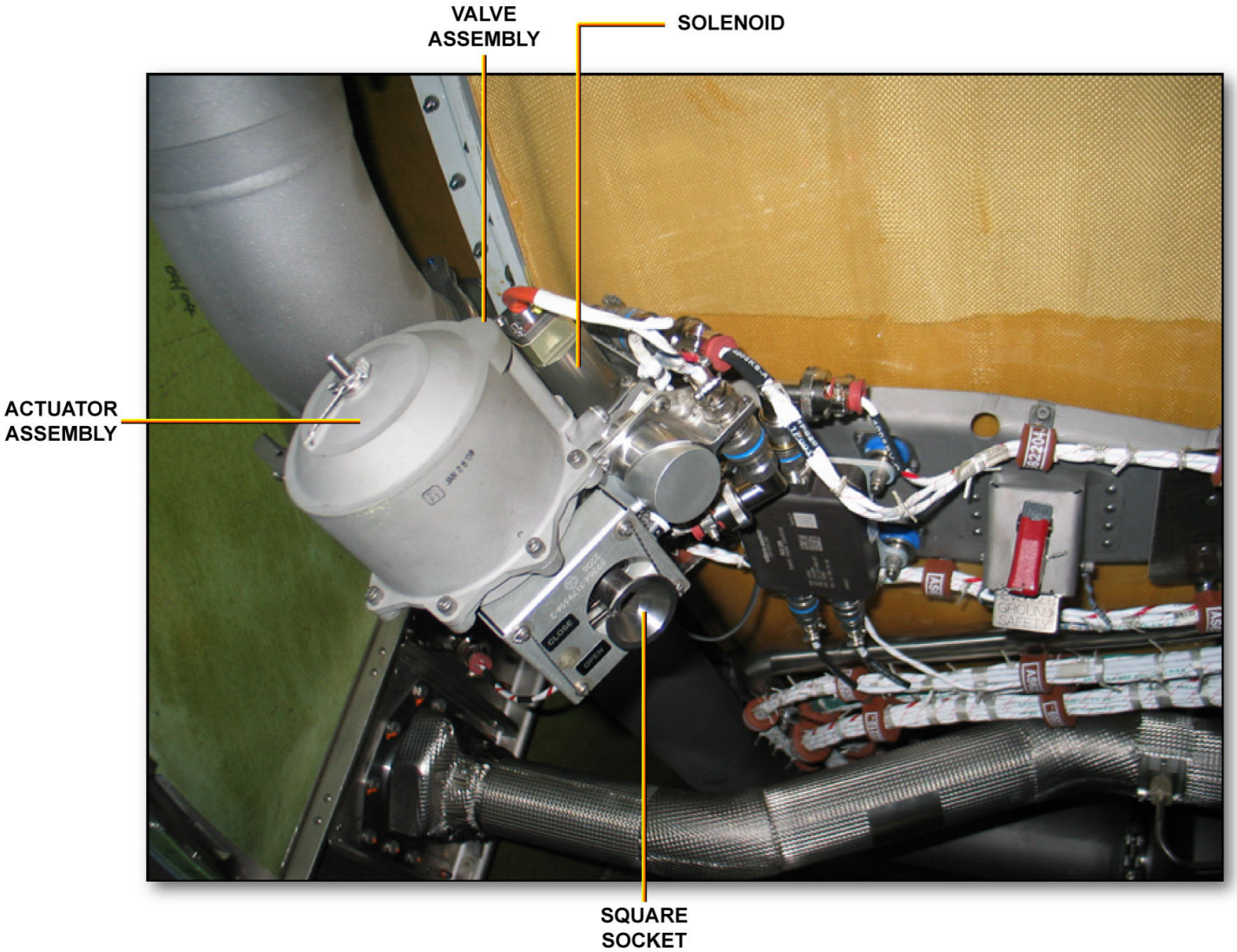

STARTING SYSTEM DESCRIPTION - STARTER CONTROL VALVE (SCV)

IGNITION AND STARTING D/O (3)

IGNITION SYSTEM DESCRIPTION

Each engine has two ignition systems, A and B. These systems are controlled by the EEC and can be operated independently or simultaneously. Each system has an ignition unit, an ignition lead and an igniter plug. Each ignition system is electrically supplied with a dedicated 115 VAC power line delivered by the aircraft electrical system through the EIVMU and transmitted to the Power Control Unit (PCU).

G7508471 - G3NT1T0 - FM70DC000000071

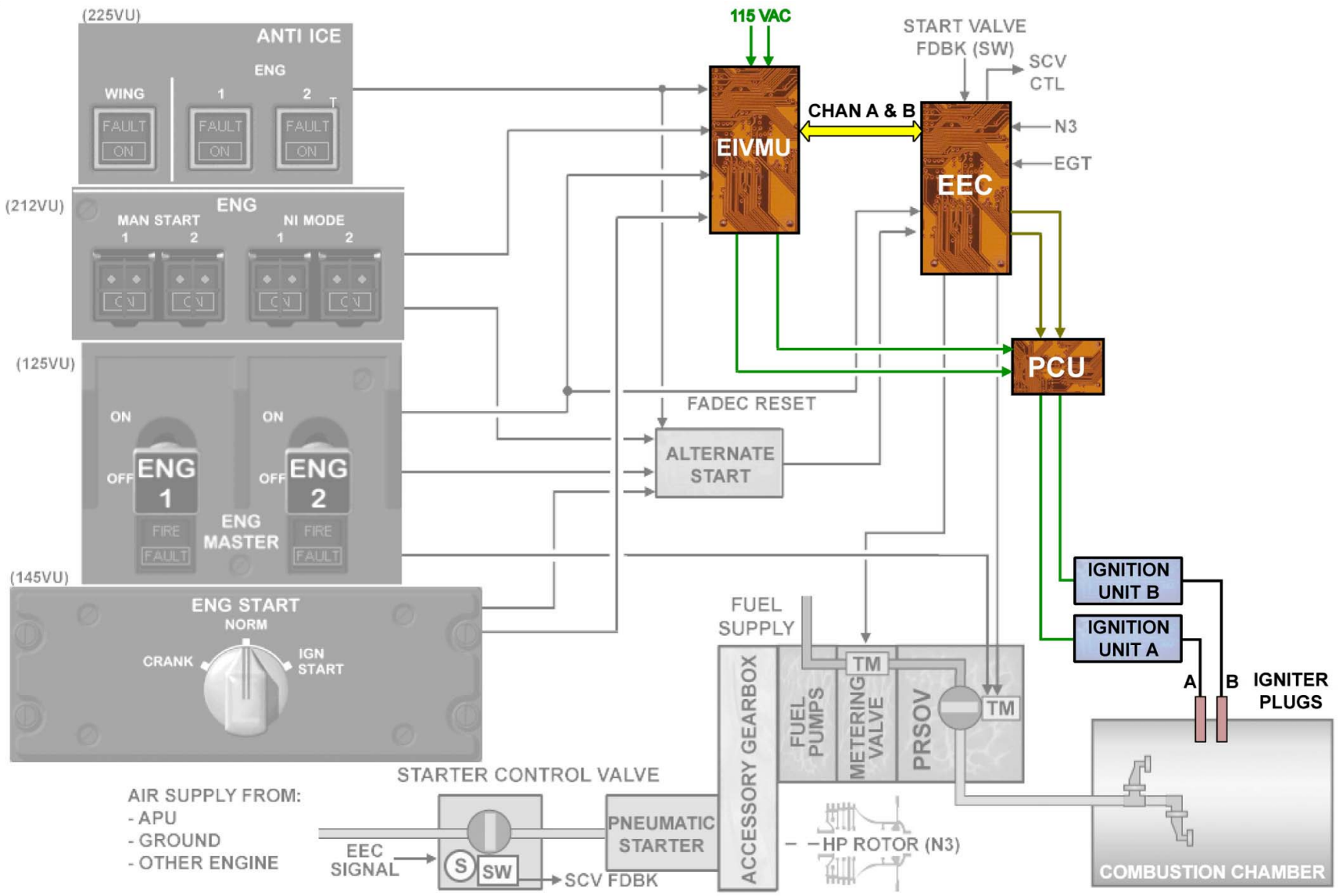

IGNITION SYSTEM DESCRIPTION

IGNITION AND STARTING D/O (3)

IGNITION SYSTEM DESCRIPTION (continued)

IGNITION UNITS

Two ignition units are installed on bracket assemblies on the lower LH side of the LP compressor case.
Each ignition unit changes electrical inputs into high voltage electrical outputs of between 2.7 and 3.0 Kvolts.
The ignition systems are of high-voltage and high-energy type.
Energy is stored in the ignition unit and is released at a rate of 60 to 135 sparks per minute.

IGNITER PLUGS AND LEADS

The igniter plugs are installed adjacent to the number 10 and number 16 fuel spray nozzles. Each igniter plug is directly supplied electrically from its associated ignition unit through an ignition lead.

G7508471 - G3NT1T0 - FM70DC000000071

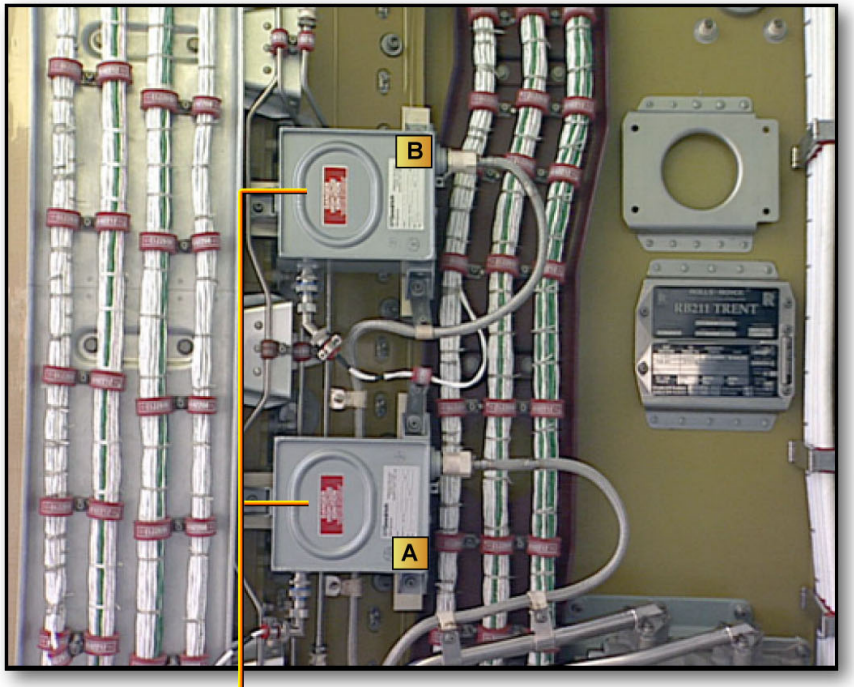

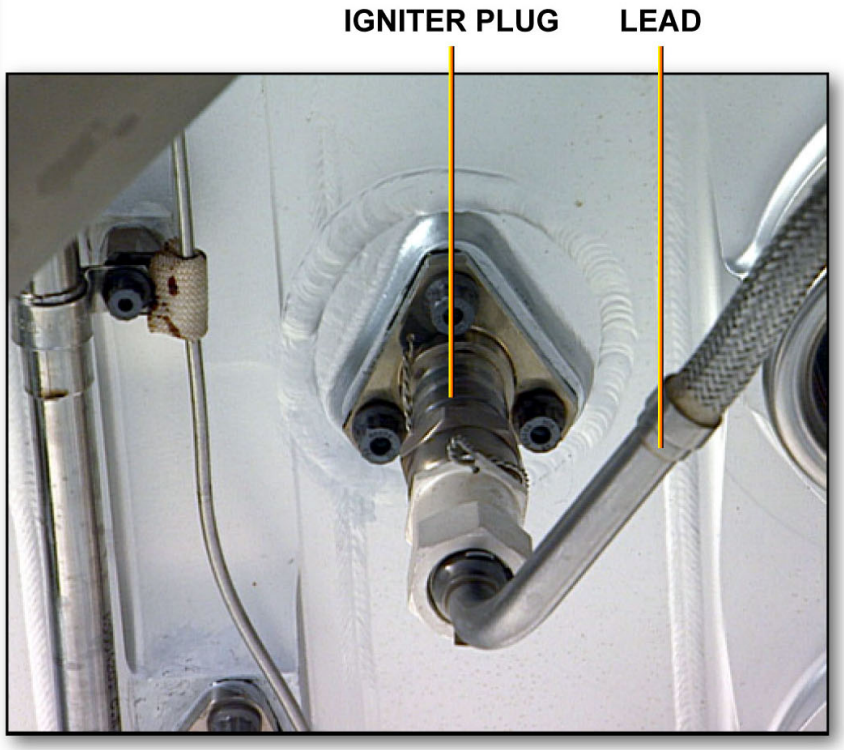

IGNITION SYSTEM DESCRIPTION - IGNITION UNITS & IGNITER PLUGS AND LEADS

IGNITION AND STARTING D/O (3)

IGNITION SYSTEM DESCRIPTION (continued)

IGNITION SYSTEM POWER SUPPLY

Two inputs of 115 Volts 400 Hz AC power are supplied by the aircraft electrical system to the PCU through the EIVMU. The PCU electrical supply remains operational even if the EIVMU fails or is not powered. The AC emergency bus is connected to two relays in PCU channel A and the AC normal bus is connected to two relays in PCU channel B. The four relays of the PCU are controlled by the EEC to supply the ignition system A or system B, or both, with either emergency or normal aircraft 115 VAC power supply. The EEC thus cycles through the possible combinations of ignition systems and aircraft power supplies during successive engine starts.

The EEC automatic start logic selects a different ignition system from the previous start in order to identify any potential ignition system failure as soon as possible.

A functional test of the ignition system can be done through the EEC MCDU page, to check correct operation of any of the power supply and ignition unit combination.

G7508471 - G3NT1T0 - FM70DC000000071

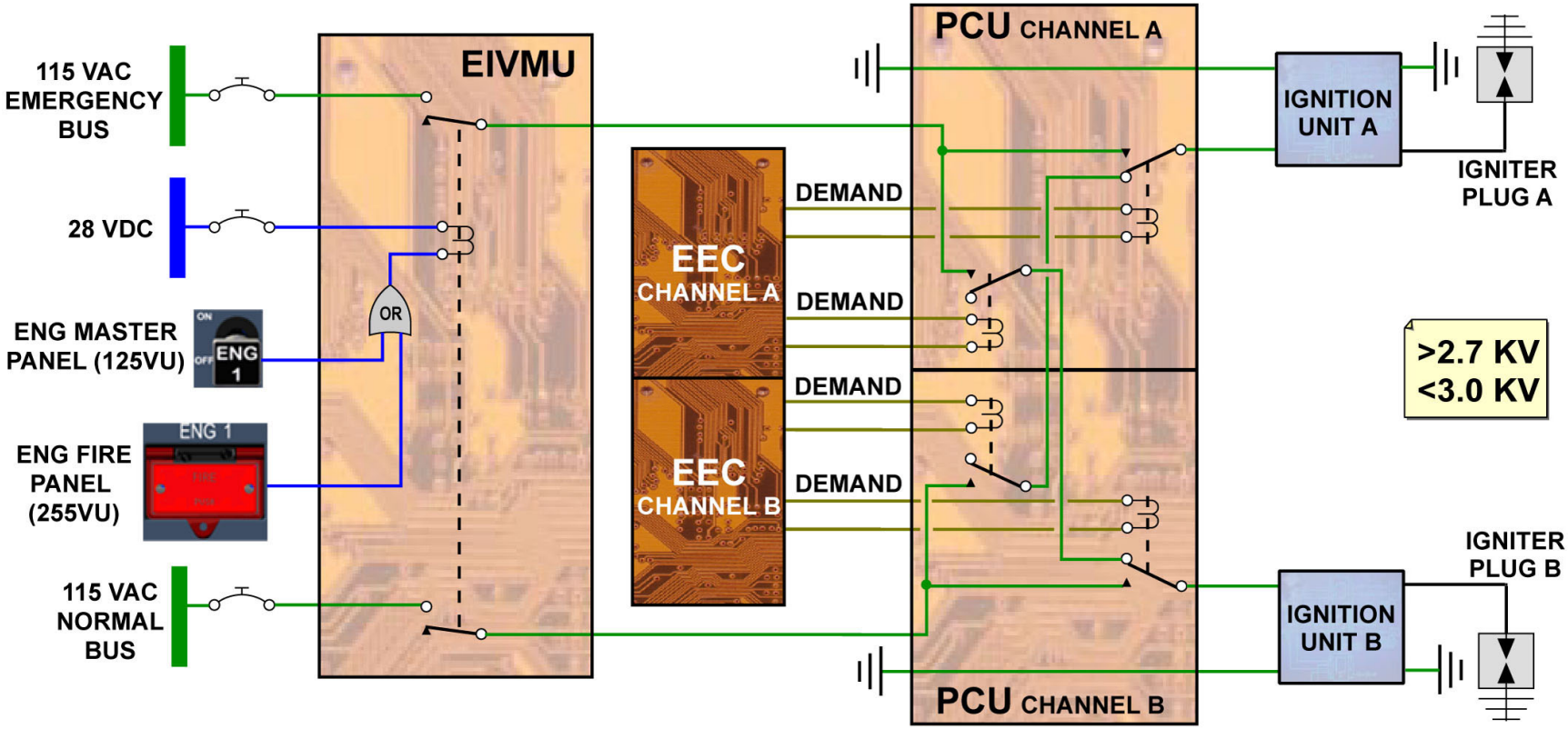

IGNITION SYSTEM DESCRIPTION - IGNITION SYSTEM POWER SUPPLY

G7508471 - G3NT1T0 - FM70DC000000071

IGNITION AND STARTING D/O (3)

STARTING OPERATION

The Full Authority Digital Engine Control (FADEC) system gives two modes of engine start: automatic start and manual start. The EEC selects the start mode according to digital inputs from the EIVMU reflecting the cockpit settings.
The automatic starting sequence can be selected with valid EIVMU data or using an alternate start discrete if the EIVMU data is invalid. Manual start mode can only be selected with valid EIVMU data.

AUTOMATIC START ON GROUND

In automatic start mode, the igniters, fuel, and SCV are under full authority of the EEC.
The engine start initial configuration is:
- the ENG MASTER switch on the ENG MASTER panel in the OFF position,
- the selector on the ENG START panel in the NORM position,
- air pressure available and above 30 psi,
- electrical power available,
- engine fuel supply available.

To initiate the automatic start sequence, first the ENG START selector must be set to IGN/START position. The FADECs are then powered and the ENGINE system page comes up automatically on the ECAM SD. Start valve position and engine bleed pressure are shown on this page in place of nacelle temperature indication.
When an ENG MASTER switch is set to ON, the corresponding fuel LP valve opens and the associated EEC controls the SCV to the open position by energizing its solenoid. Air pressure is delivered to the pneumatic starter, which starts to rotate the N3 rotor. The FADEC continuously monitors N3 and Exhaust Gas Temperature (EGT) during the starting sequence.
When N3 reaches 25%, and EGT is below 150 degrees Celsius, the EEC commands the fuel supply by opening the fuel metering valve and the Pressure Raising and Shut Off Valve (PRSOV), and selects one ignition system on (A or B). The active ignition system is indicated on ECAM. The fuel flow starts to increase.
When N3 reaches 50%, the EEC closes the SCV and de-energizes the active igniter. The ECAM indication of the active igniter disappears.
The EEC continues to monitor the starting sequence until minimum idle is reached.
At the end of the sequence, the ENG START selector must be set back to NORM.

G7508471 - G3NT1T0 - FM70DC000000071

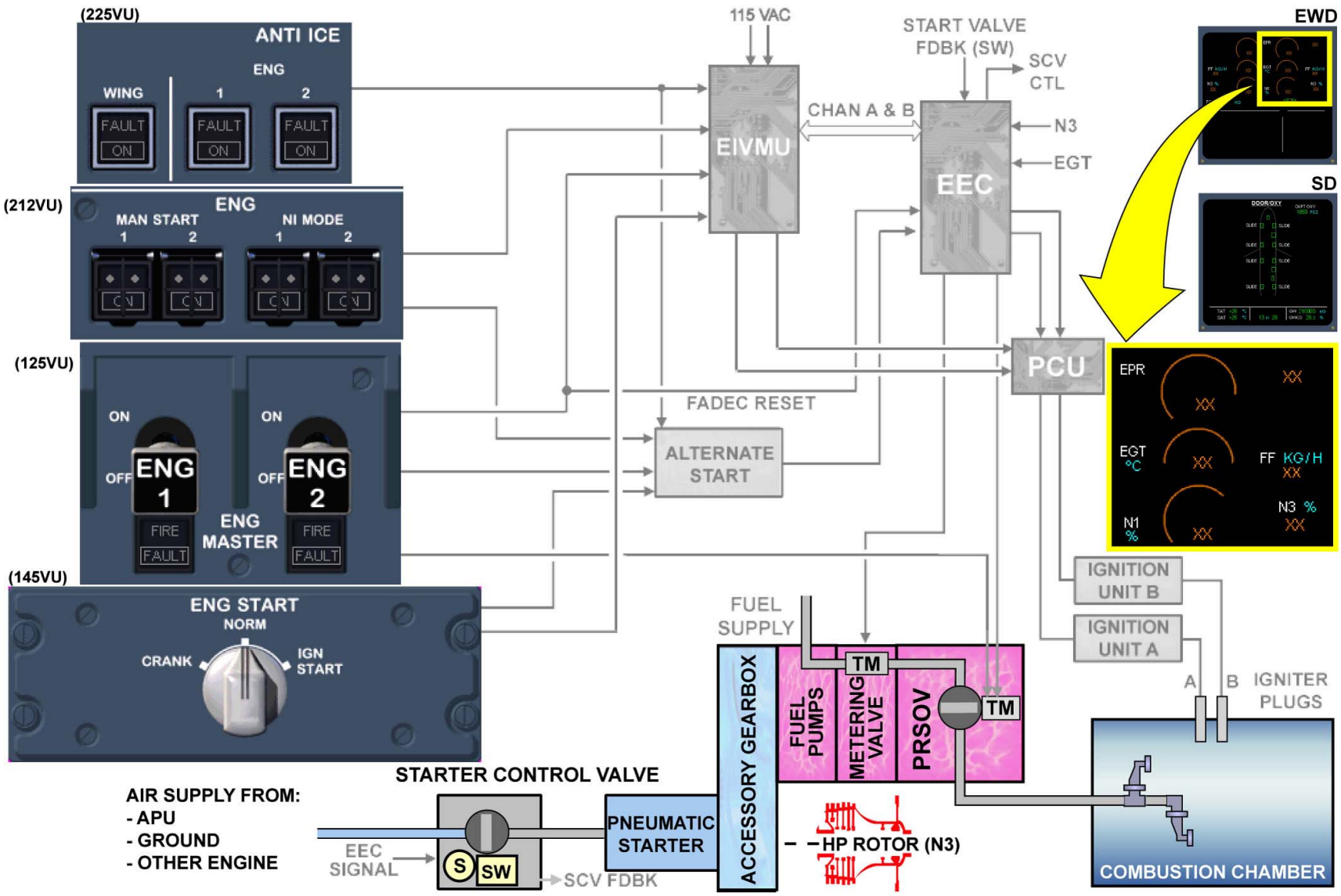

STARTING OPERATION - AUTOMATIC START ON GROUND

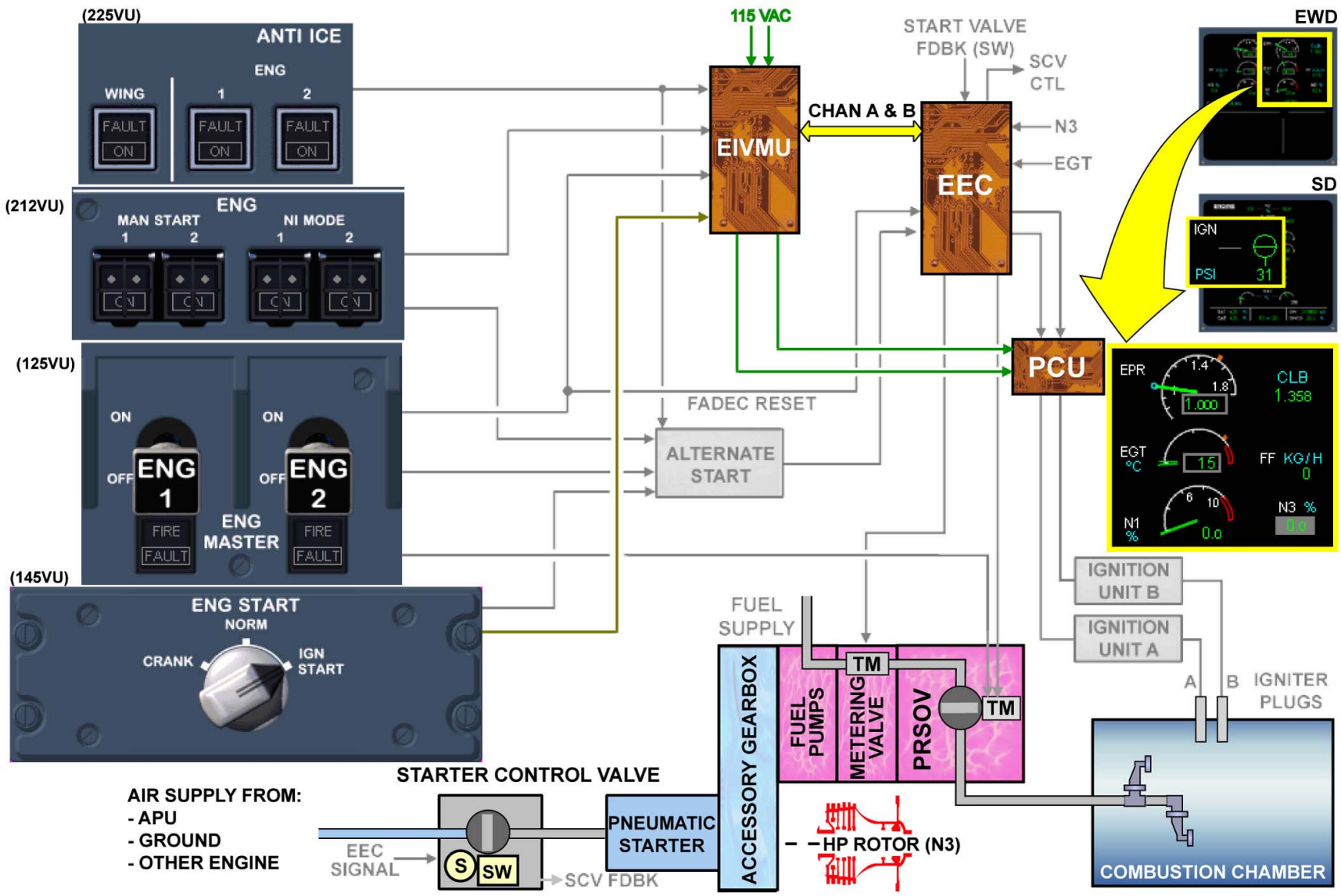

STARTING OPERATION - AUTOMATIC START ON GROUND

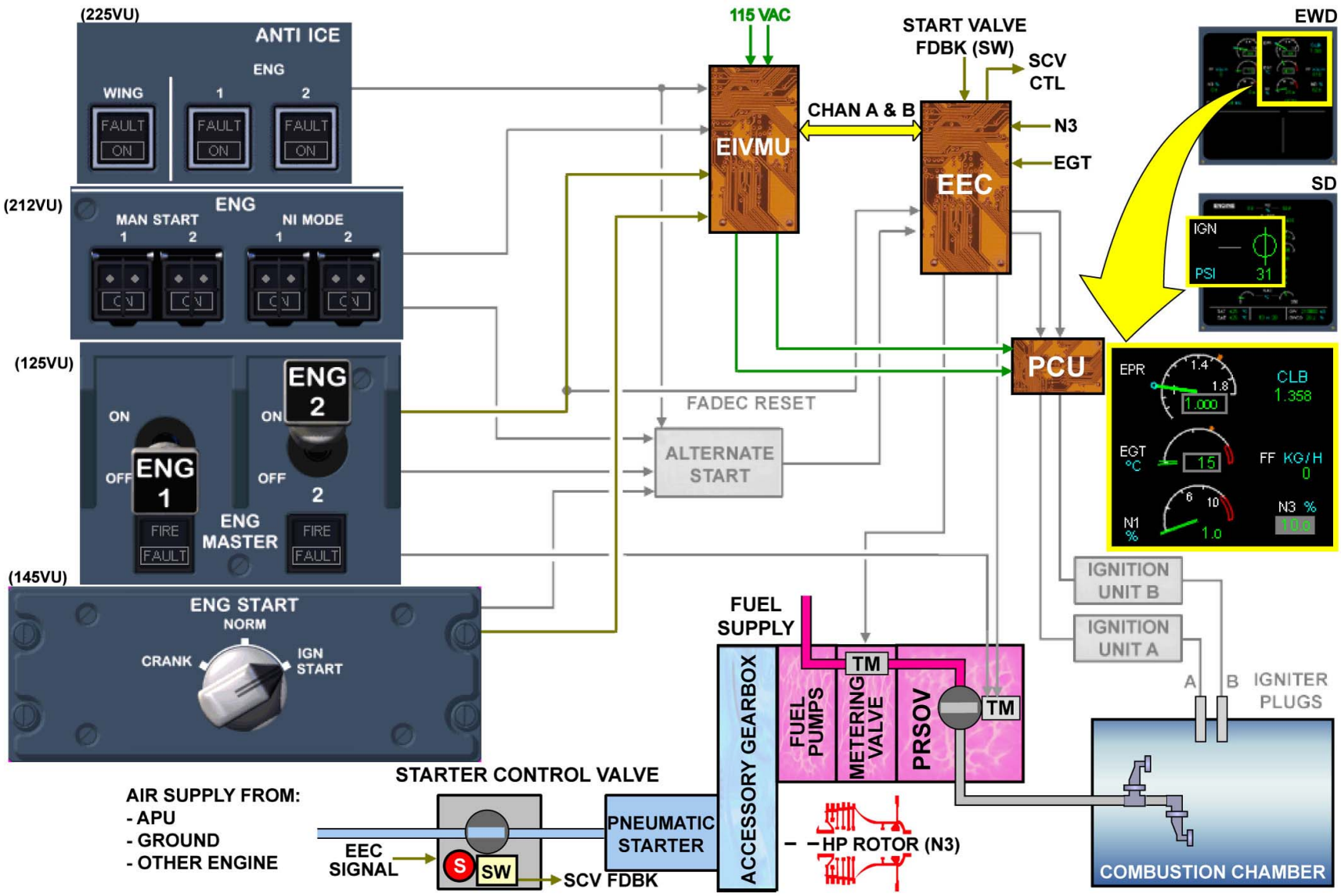

STARTING OPERATION - AUTOMATIC START ON GROUND

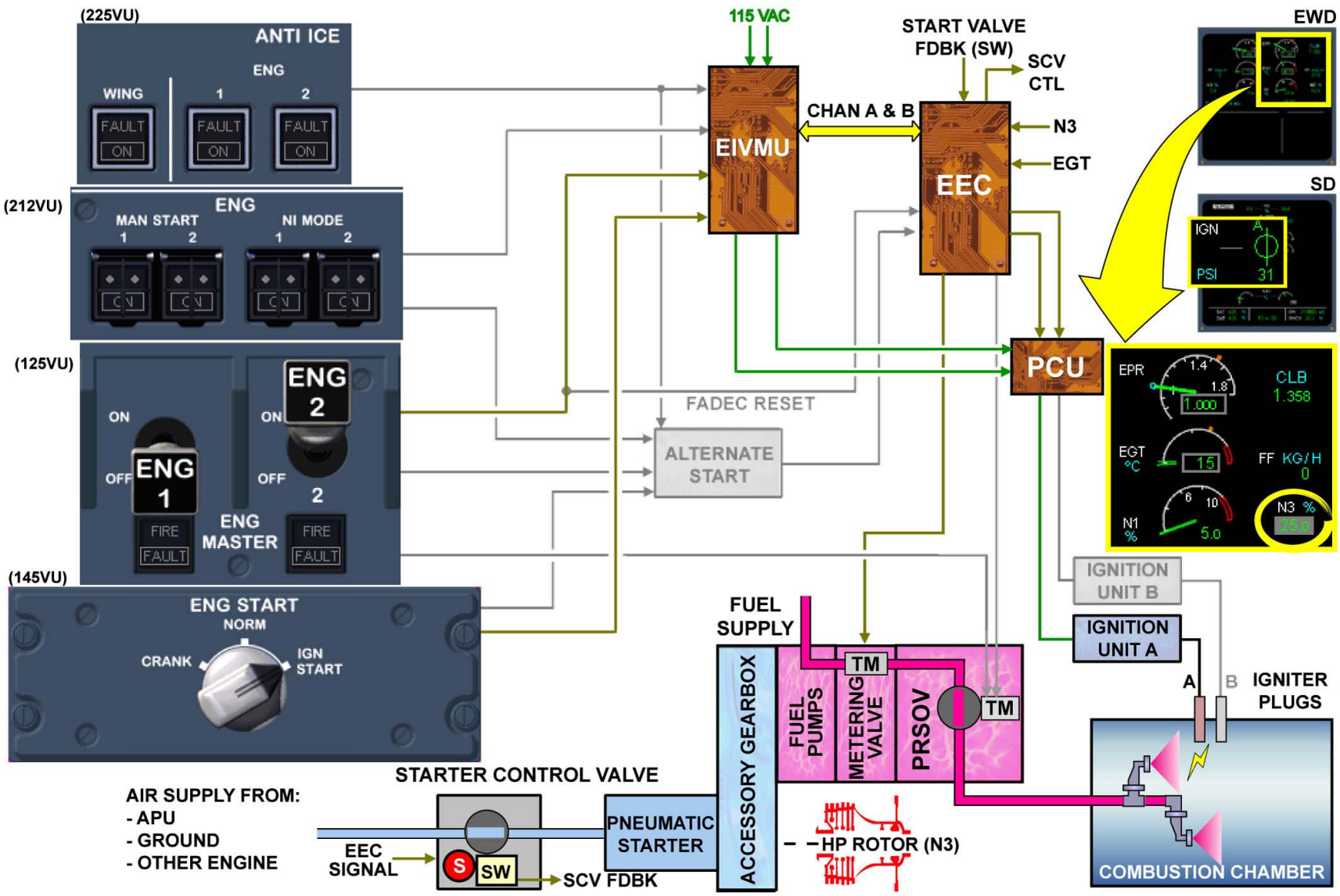

STARTING OPERATION - AUTOMATIC START ON GROUND

G7508471 - G3NT1T0 - FM70DC00000071

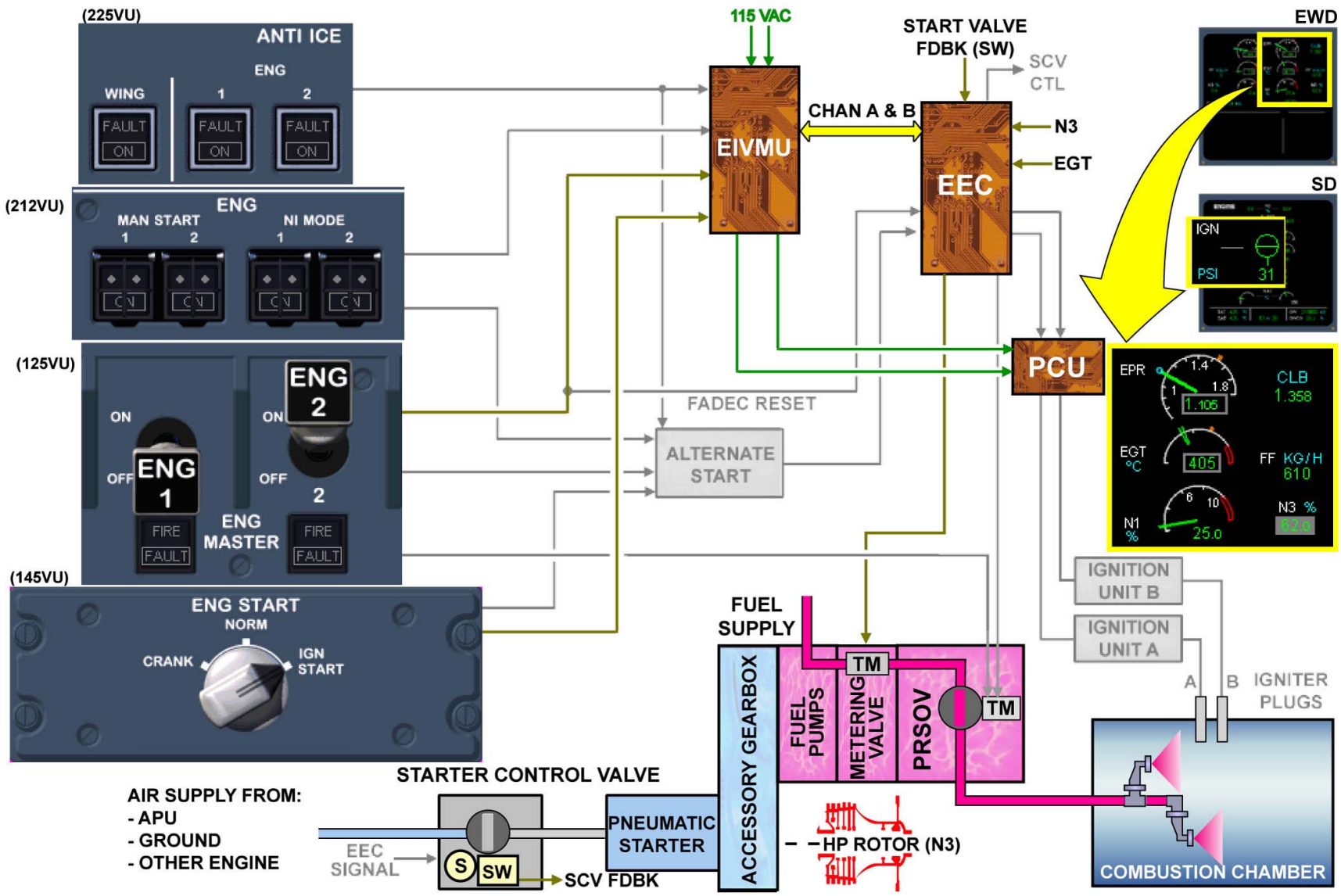

STARTING OPERATION - AUTOMATIC START ON GROUND

G7508471 - G3NT1T0 - FM70DC000000071

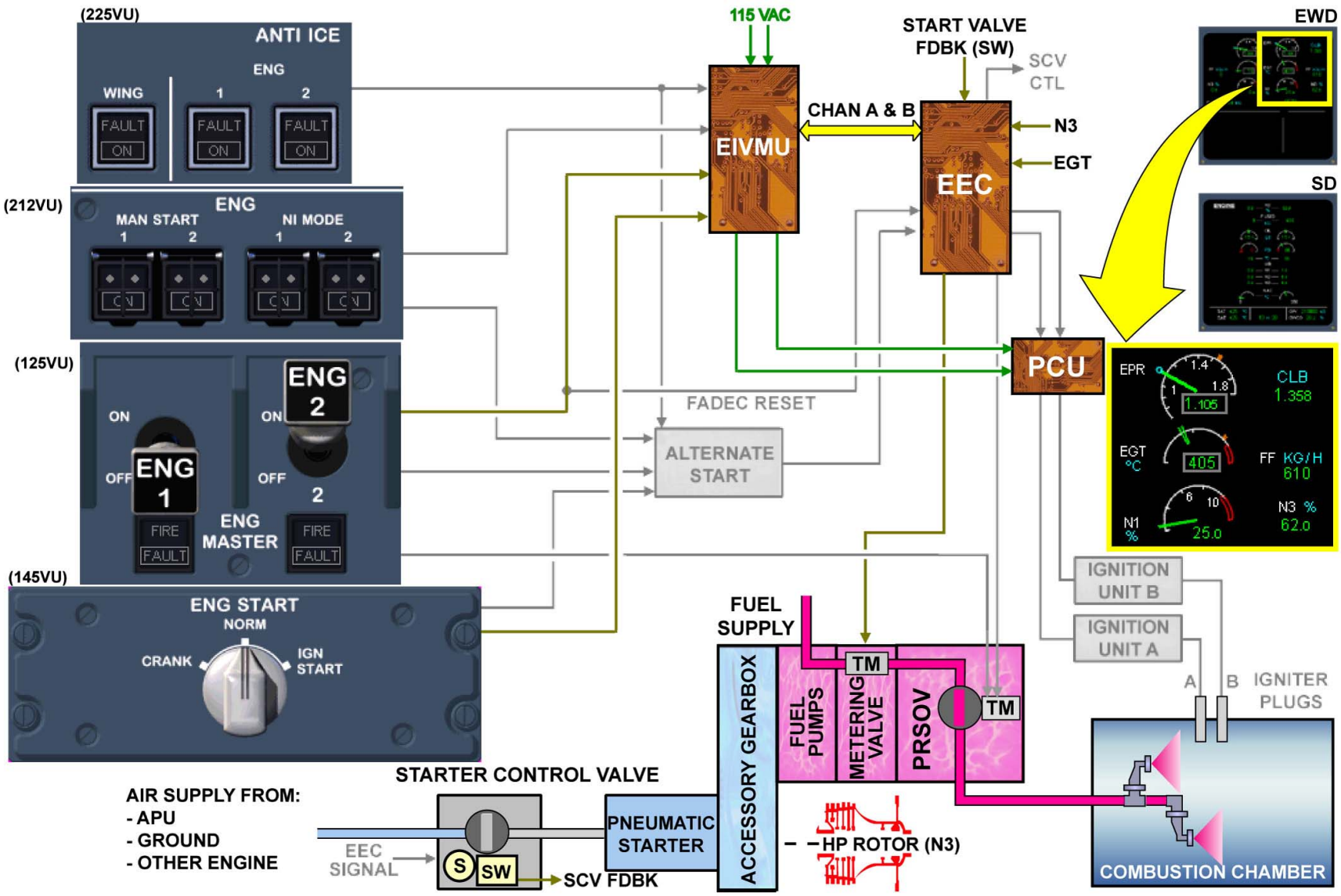

STARTING OPERATION - AUTOMATIC START ON GROUND

This Page Intentionally Left Blank

G7508471 - G3NT1T0 - FM70DC000000071

IGNITION AND STARTING D/O (3)

STARTING OPERATION (continued)

MANUAL START ON GROUND

A manual start procedure is recommended at high altitude airports, during hot weather conditions, or any time the pneumatic pressure delivered to SCV is low.

In manual start mode, starting control is under limited authority of the EEC. The SCV, fuel supply and igniters are controlled by the crew using a conventional procedure. The initial conditions to start the engine in manual mode are identical to those of the automatic start.

To initiate a manual start sequence, the ENG START selector must be set to IGN/START position. Both EECs are then powered and the ENGINE system page comes up automatically on the ECAM SD. The EEC ensures only a passive monitoring of the manual start sequence.

The associated ENGine MANual START P/B is set to ON position and the EEC opens the SCV, allowing the pneumatic starter to rotate the N3 rotor.

When N3 reaches its maximum motoring speed and at least 25%, the associated ENG MASTER switch has to be selected ON.

Then, the EEC commands the fuel supply by opening the metering valve and the PRSOV and selects both ignition systems on. The fuel flow starts to increase. The EEC monitors the N3.

When N3 reaches 50%, the EEC closes the SCV and de-energizes both ignition systems.

Once the start sequence is completed, the ENG START selector is set back to NORM position and the ENG MAN START P/B is set back to OFF.

G7508471 - G3NT1T0 - FM70DC000000071

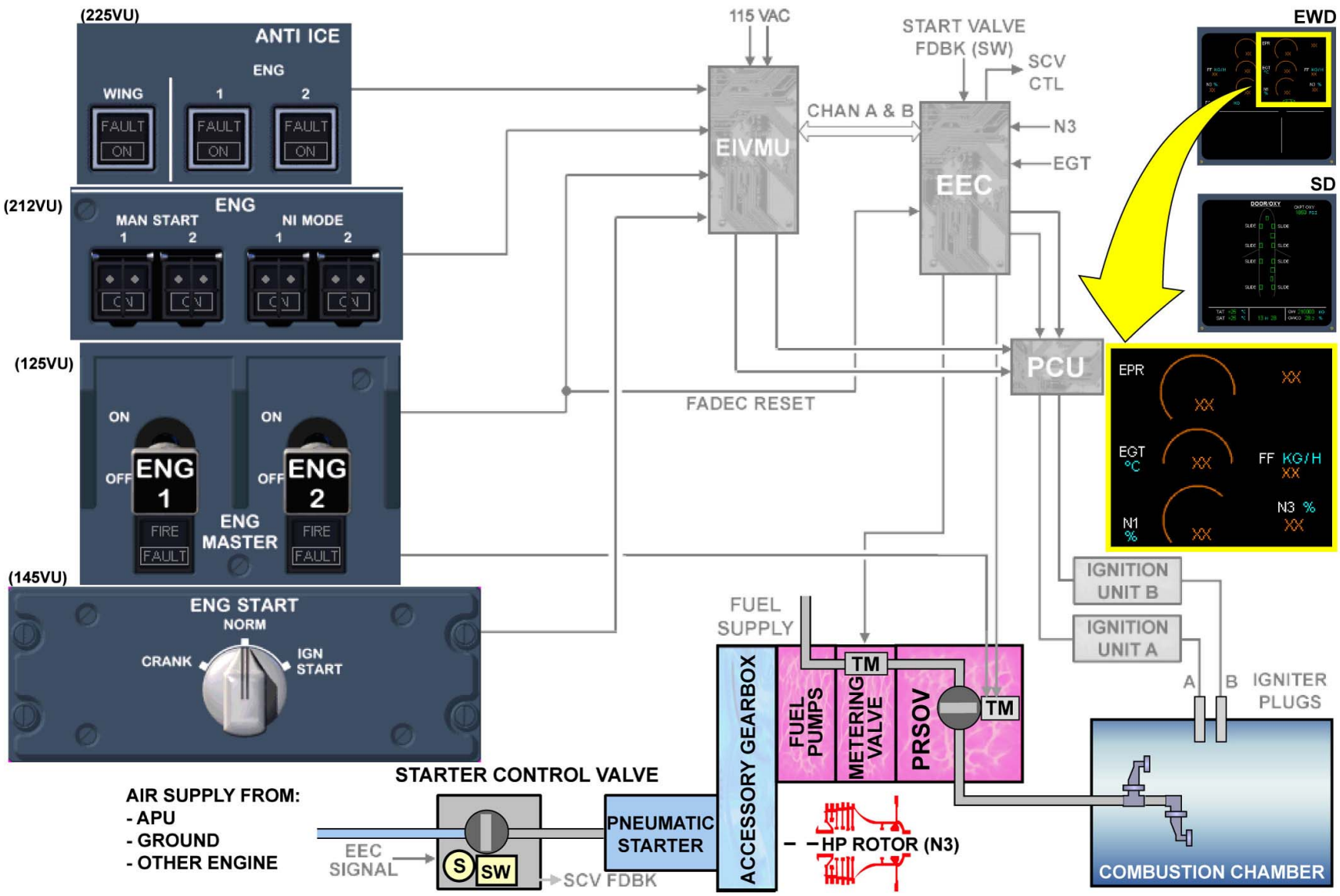

STARTING OPERATION - MANUAL START ON GROUND

G7508471 - G3NT1T0 - FM70DC000000071

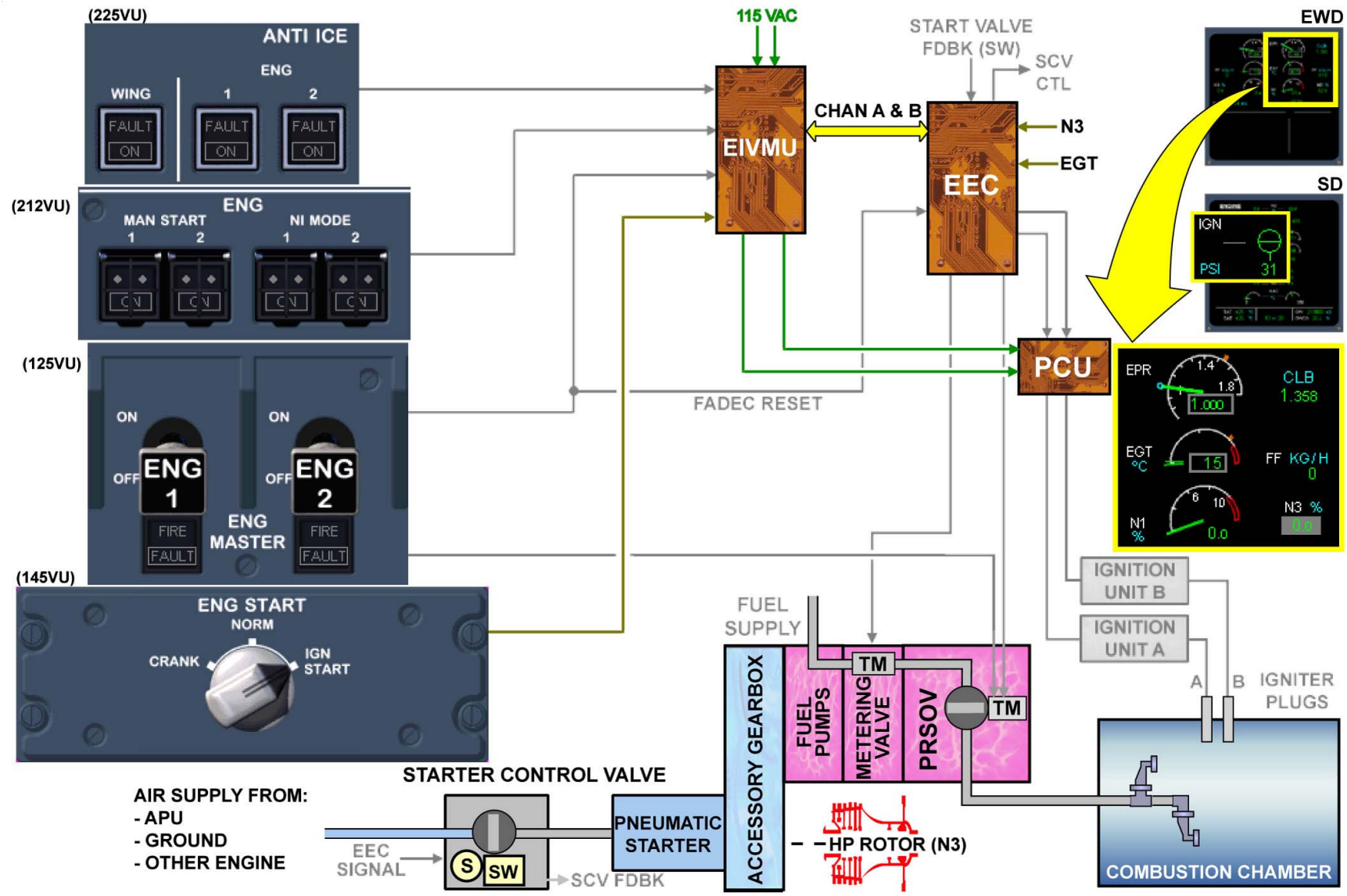

STARTING OPERATION - MANUAL START ON GROUND

G7508471 - G3NT1T0 - FM70DC00000071

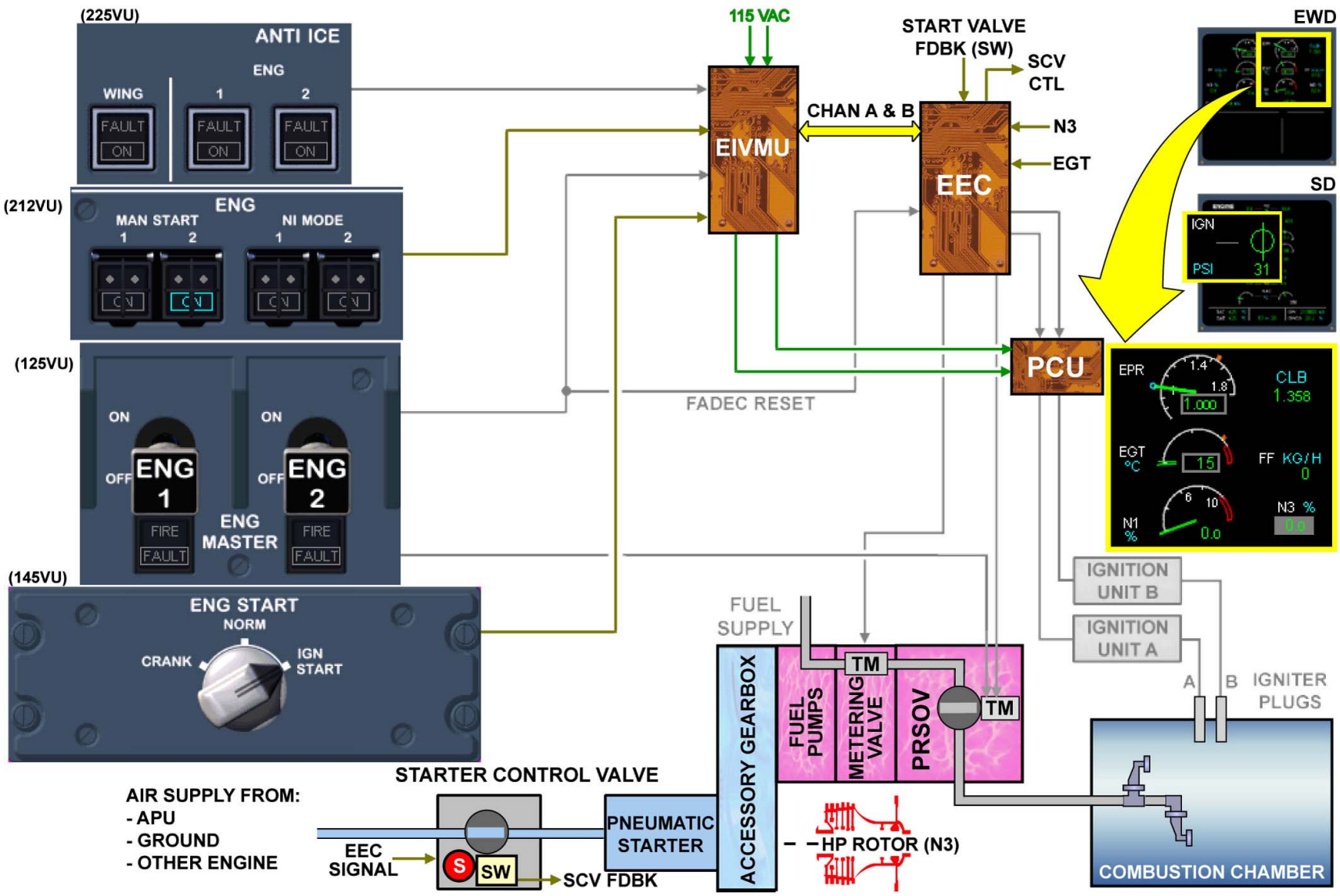

STARTING OPERATION - MANUAL START ON GROUND

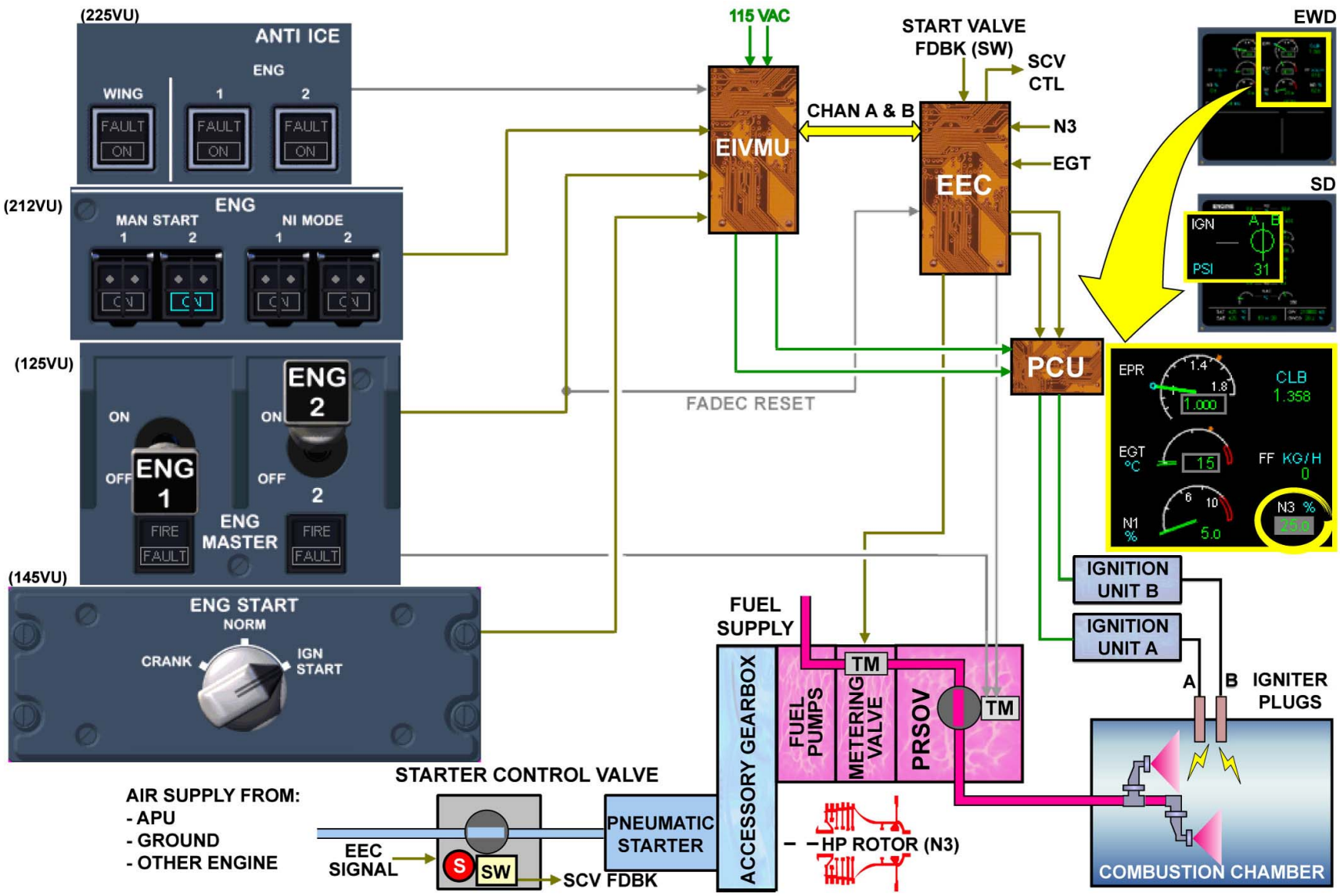

STARTING OPERATION - MANUAL START ON GROUND

G7508471 - G3NT1T0 - FM70DC00000071

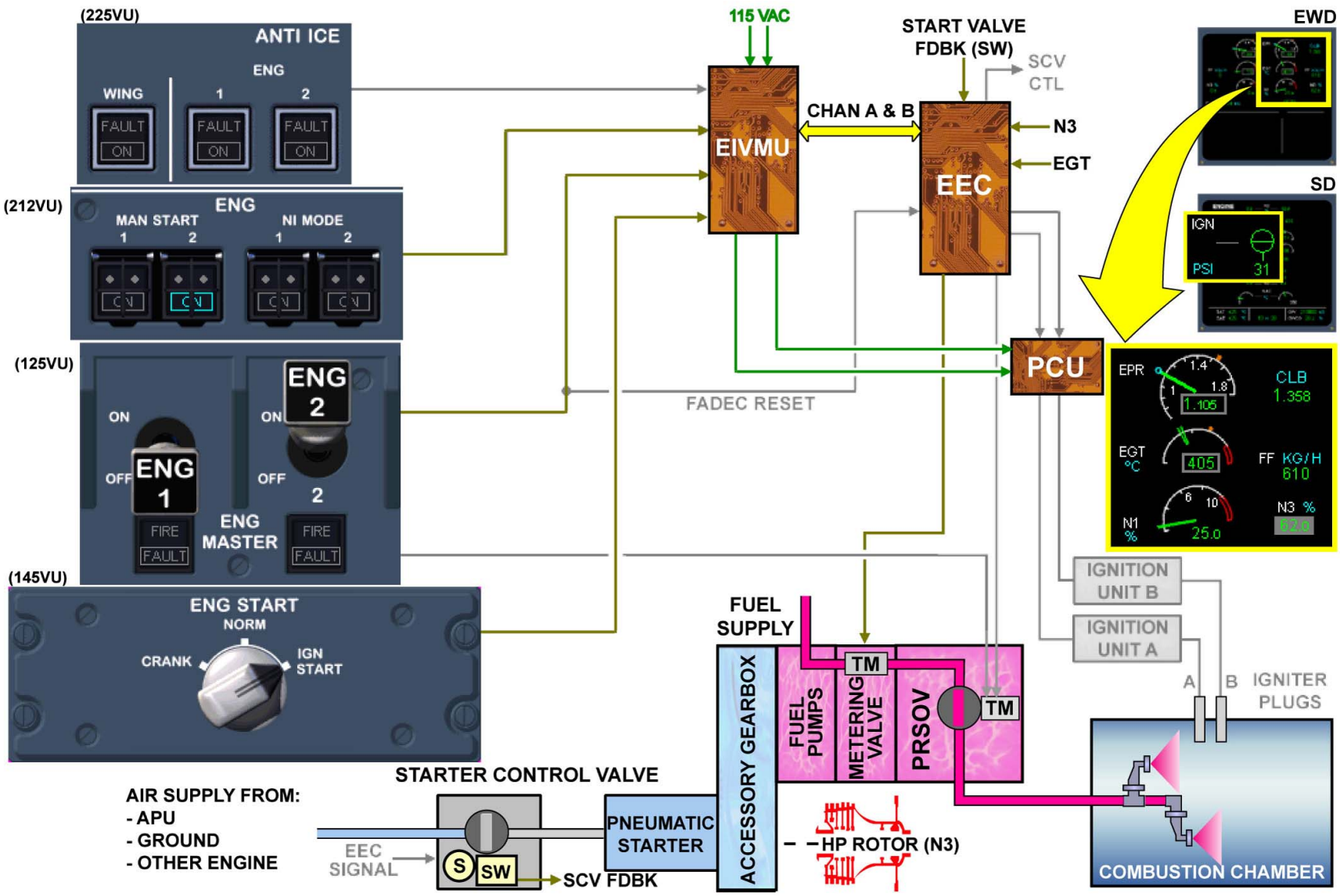

STARTING OPERATION - MANUAL START ON GROUND

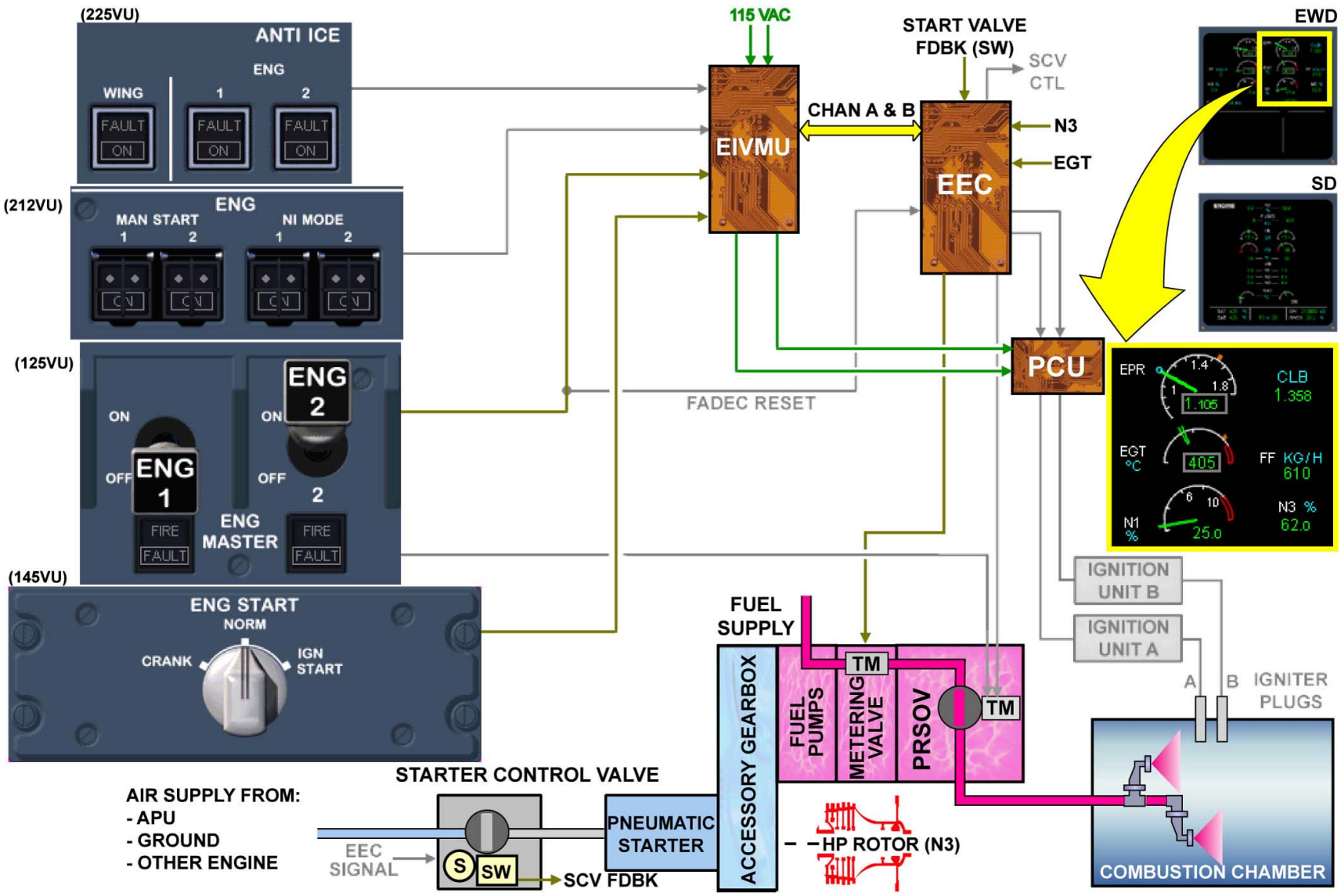

STARTING OPERATION - MANUAL START ON GROUND

This Page Intentionally Left Blank

G7508471 - G3NT1T0 - FM70DC000000071

IGNITION AND STARTING D/O (3)

STARTING OPERATION (continued)

APU BOOST

During an automatic or manual start using APU bleed, when the ENG START selector is set to IGN/START position, the APU Electronic Control Box (ECB) receives a Main Engine Start (MES) input signal via the EIVMU to boost the APU bleed airflow.
When N3 reaches 50%, the ECB sets the bleed airflow back to normal.

G7508471 - G3NT1T0 - FM70DC000000071

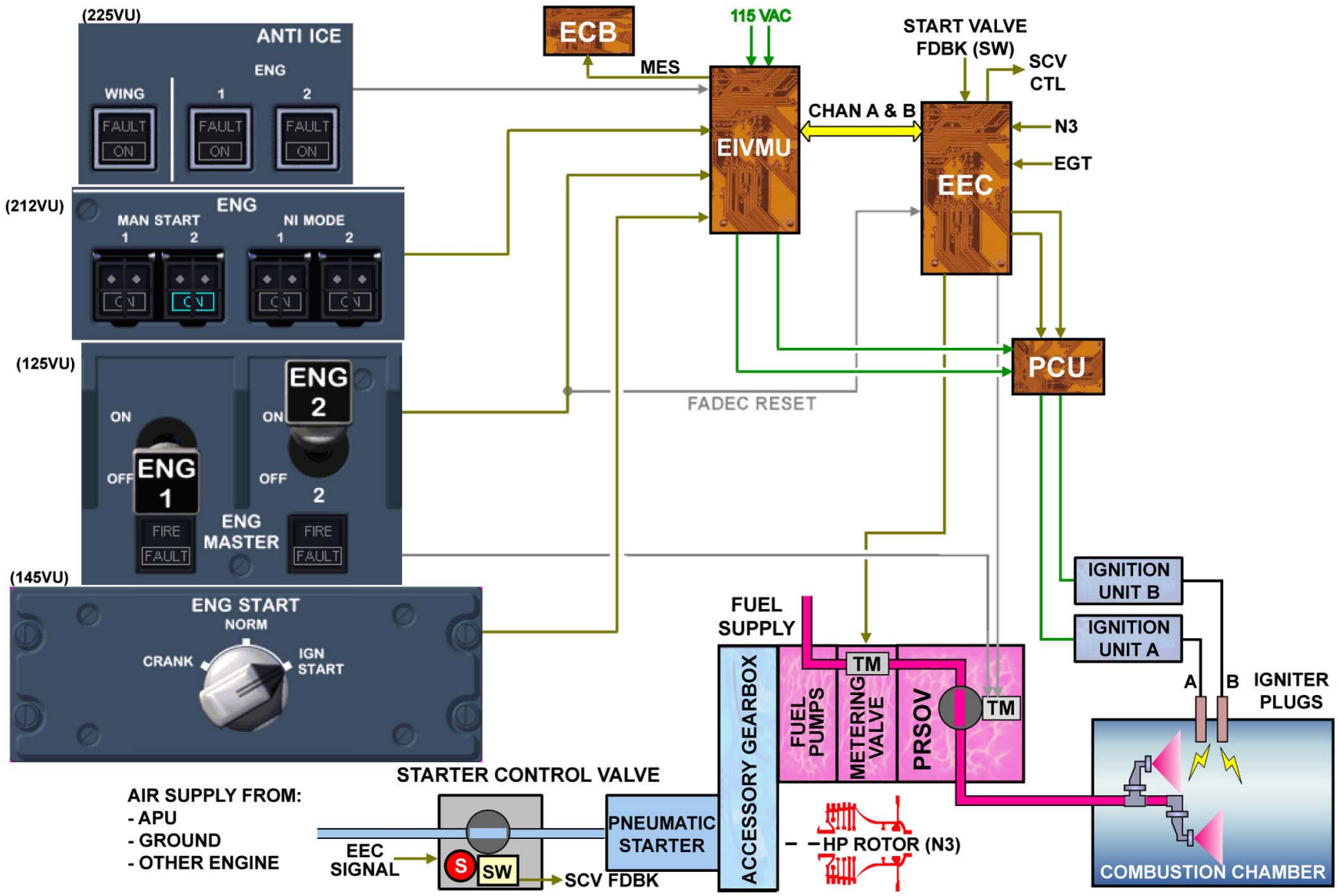

STARTING OPERATION - APU BOOST

IGNITION AND STARTING D/O (3)

STARTING OPERATION (continued)

ALTERNATE START DISCRETE LOGIC

In normal operation, engine starting/shutdown/ignition control is initiated by the EEC based on the position of switches on the engine control panels. The discrete signals from these switches are sent to the EIVMU, converted into digital data and transmitted to the EEC. So that an EIVMU failure should not prevent the aircraft dispatch, an alternate start discrete logic has been designed to allow the main starting functions to be maintained.
When EIVMU data are not available, the alternate start discrete logic lets the EEC peform an automatic start, dry motoring or selection of continuous ignition. The alternate start discrete logic integrates the position of the following controls:
- the ENG START rotary selector,
- the ENG MASTER switch,
- the ENG MANual START P/B,
- the ENG ANTI ICE P/B and,
- the engine running discrete (N3>50%).

When IGN START is selected and the ENG MASTER switch is set to ON the EEC initiates an automatic start.
When CRANK is selected and the MAN START P/B is pressed in the EEC initiates the dry motoring procedure.
When IGN START is selected and the engine is running, the EEC selects continuous ignition.
When ENG ANTI ICE is selected while the engine is running, the EEC selects continuous ignition.

G7508471 - G3NT1T0 - FM70DC000000071

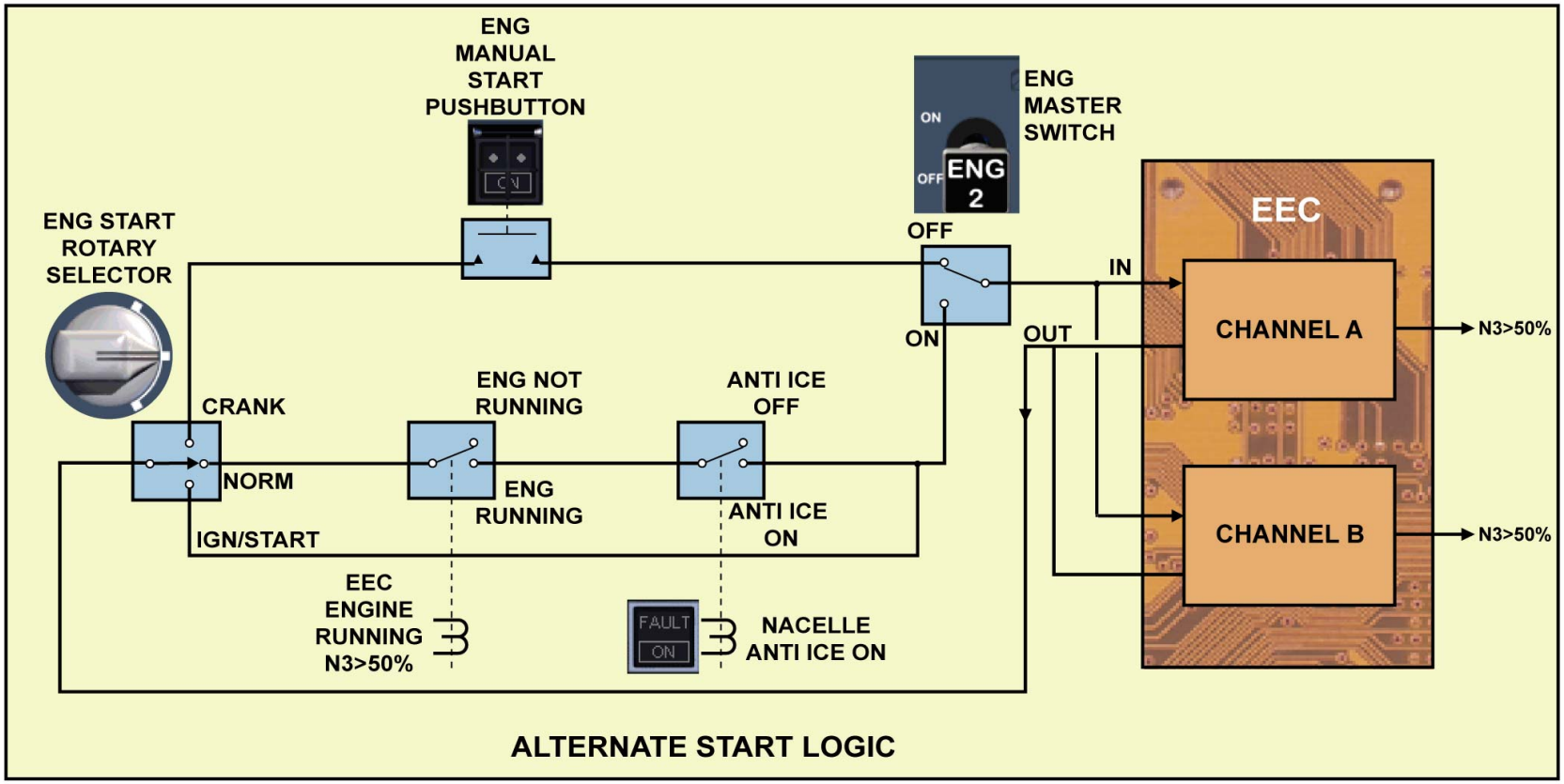

STARTING OPERATION - ALTERNATE START DISCRETE LOGIC

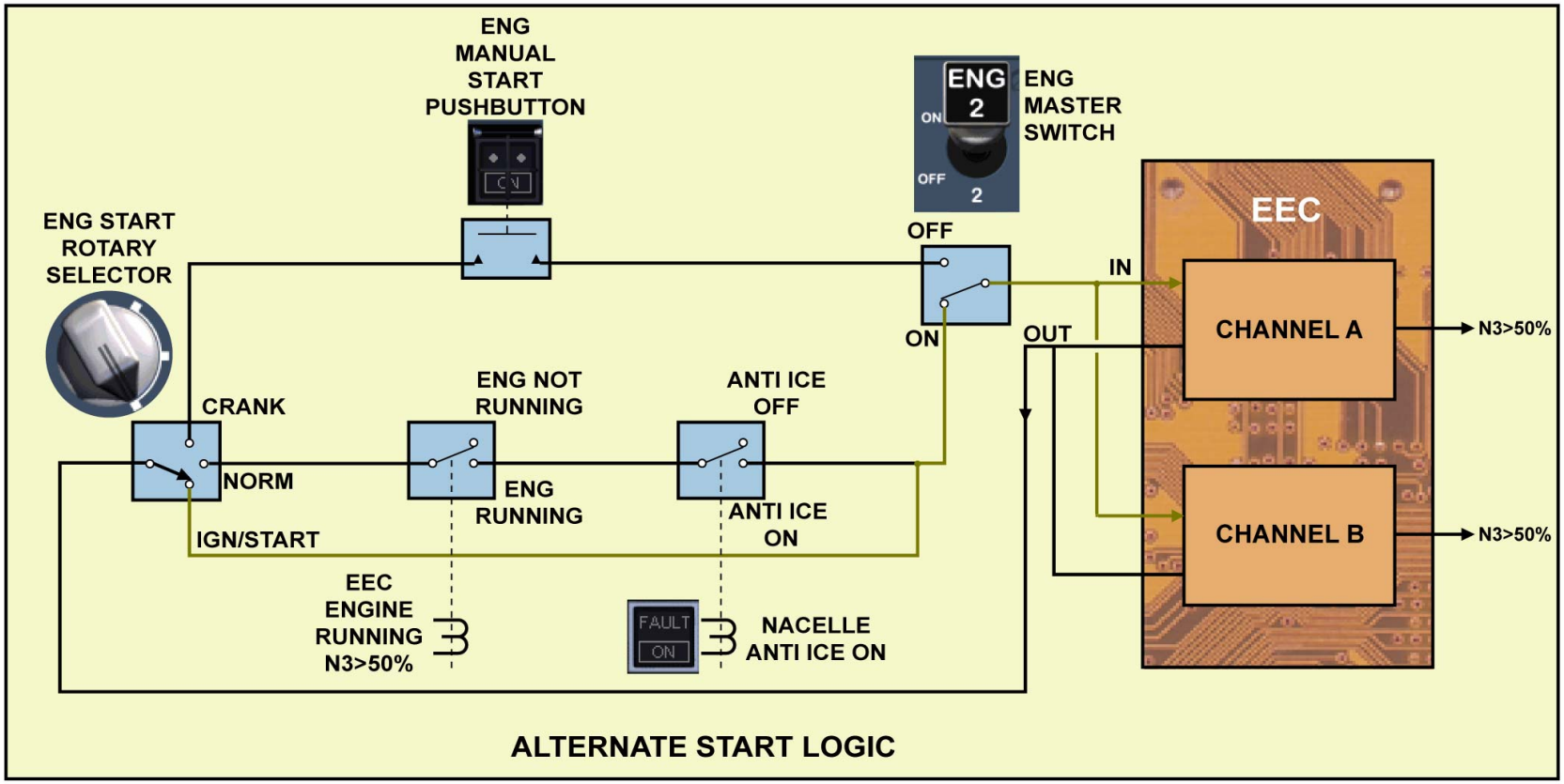

STARTING OPERATION - ALTERNATE START DISCRETE LOGIC

DRY MOTORING

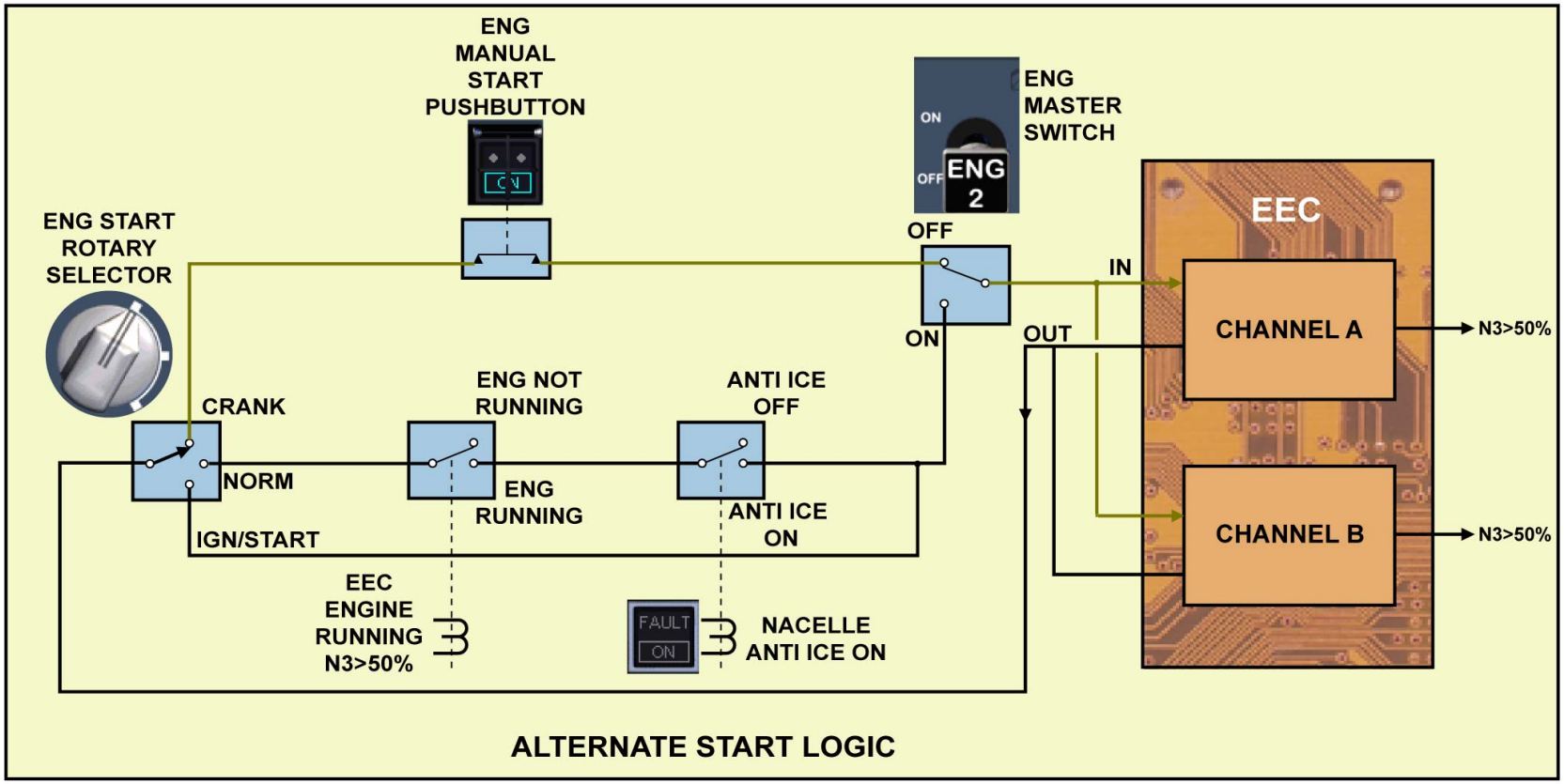

STARTING OPERATION - ALTERNATE START DISCRETE LOGIC

CONTINUOUS IGNITION

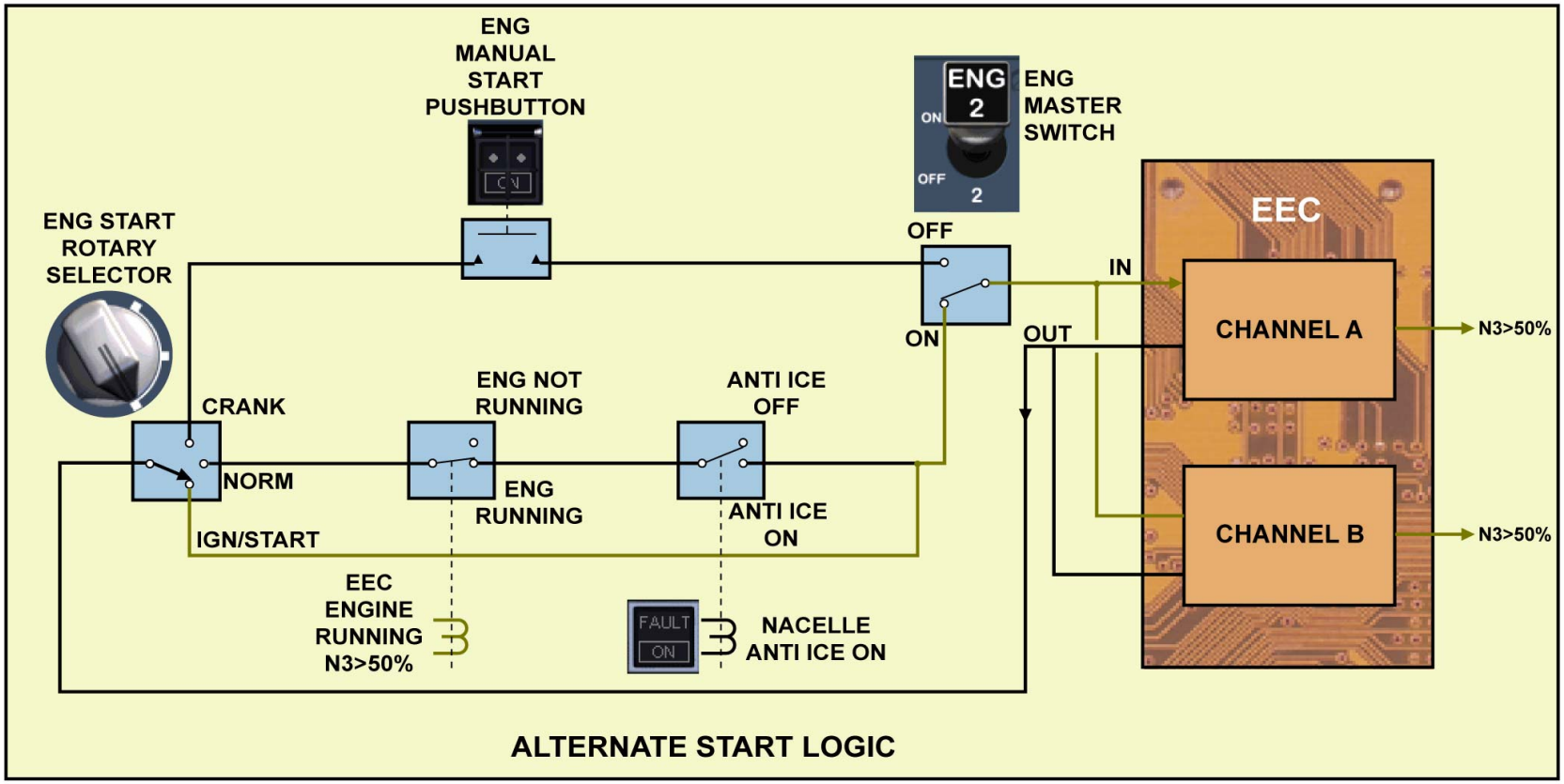

STARTING OPERATION - ALTERNATE START DISCRETE LOGIC

CONTINUOUS IGNITION

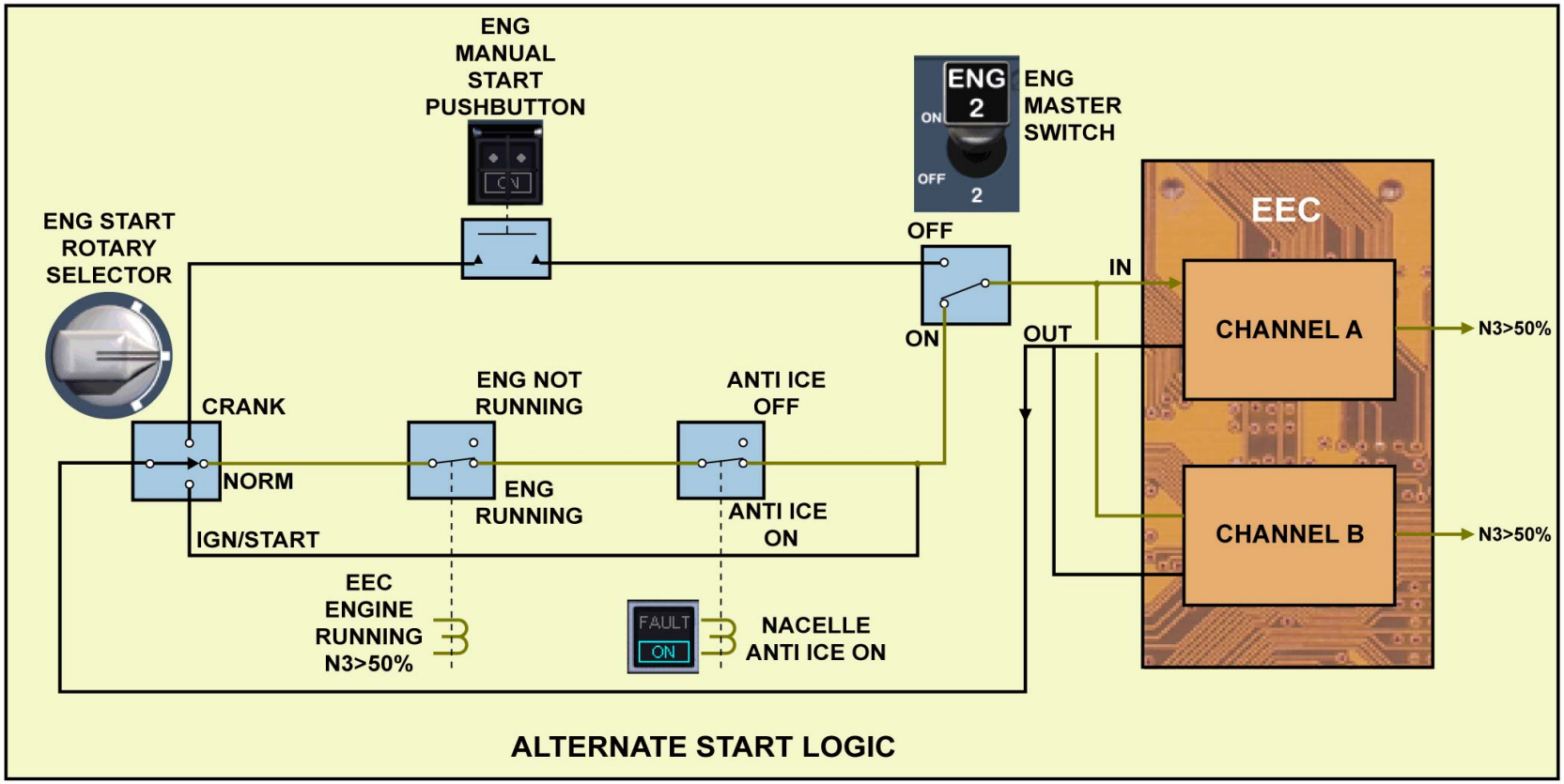

STARTING OPERATION - ALTERNATE START DISCRETE LOGIC

IGNITION AND STARTING D/O (3)

STARTING OPERATION (continued)

AUTOMATIC AND MANUAL START ABORT

The automatic and manual start sequence can be interrupted by placing the ENG MASTER switch back to the OFF position. This causes:
- closure of the PRSOV directly,
- closure of the SCV,
- de-energization of the igniters.

Turning the ENG START selector switch to NORM or CRANK while the automatic start sequence is already initiated has no effect.
In manual start mode, if the ENGine MANual START P/B is released out before the ENG MASTER switch is set to ON, the SCV will close and abort the manual starting sequence.
On ground only, the EEC can abort an automatic start sequence for the following conditions:
- hot start (EGT overlimit),
- hung start (no acceleration),
- no light up (no ignition),
- stall,
- locked N1 rotor.

In case of hot start, stall or no light up, the EEC cuts off the fuel supply and ignition, does an automatic dry cranking and initiates a second start attempt when the EGT is below 150 degrees Celsius. If the second start attempt is not successful, the starting sequence is aborted. A warning is displayed on ECAM and the FAULT light illuminates on the ENG MASTER panel.

G7508471 - G3NT1T0 - FM70DC000000071

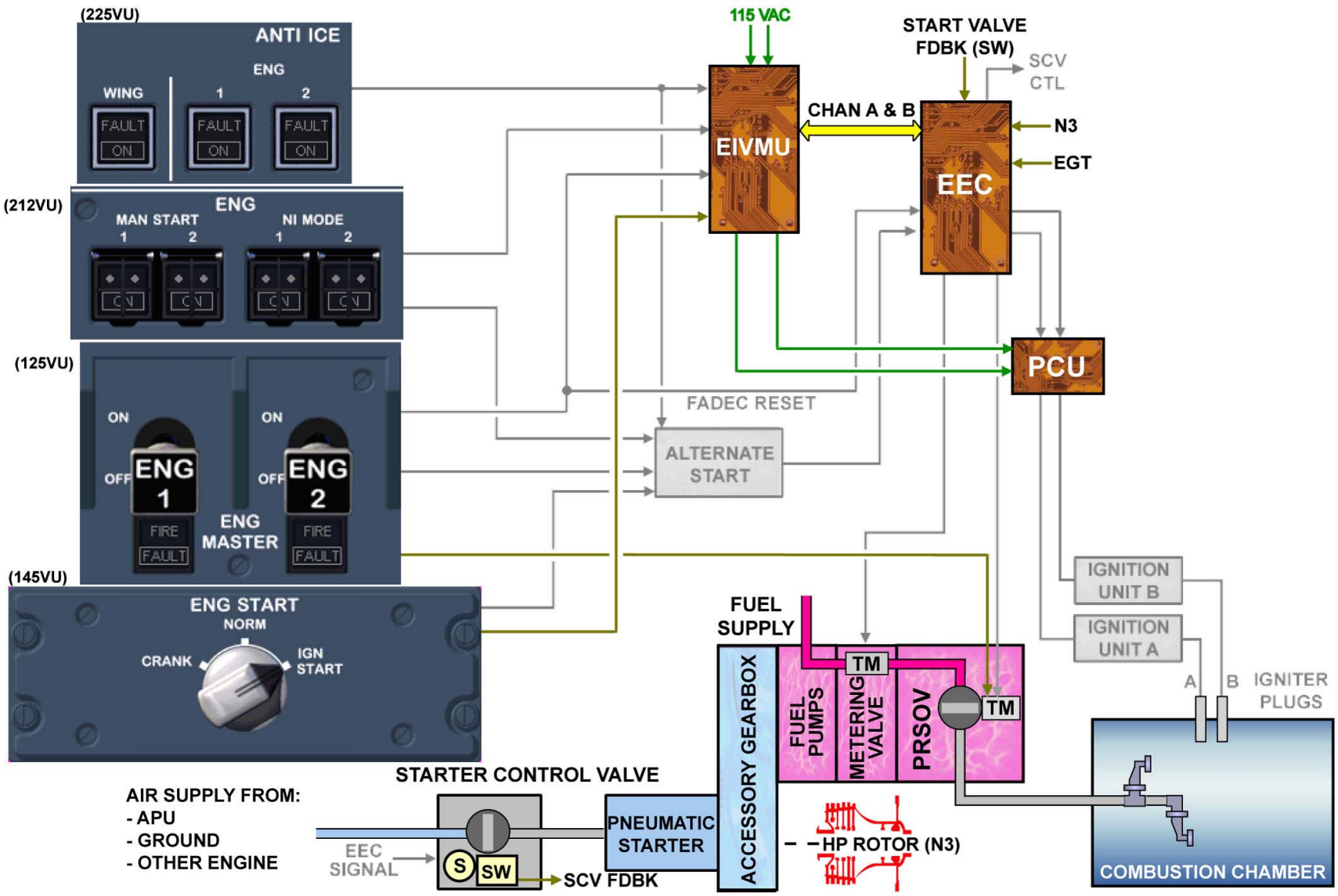

STARTING OPERATION - AUTOMATIC AND MANUAL START ABORT

G7508471 - G3NT1T0 - FM70DC000000071

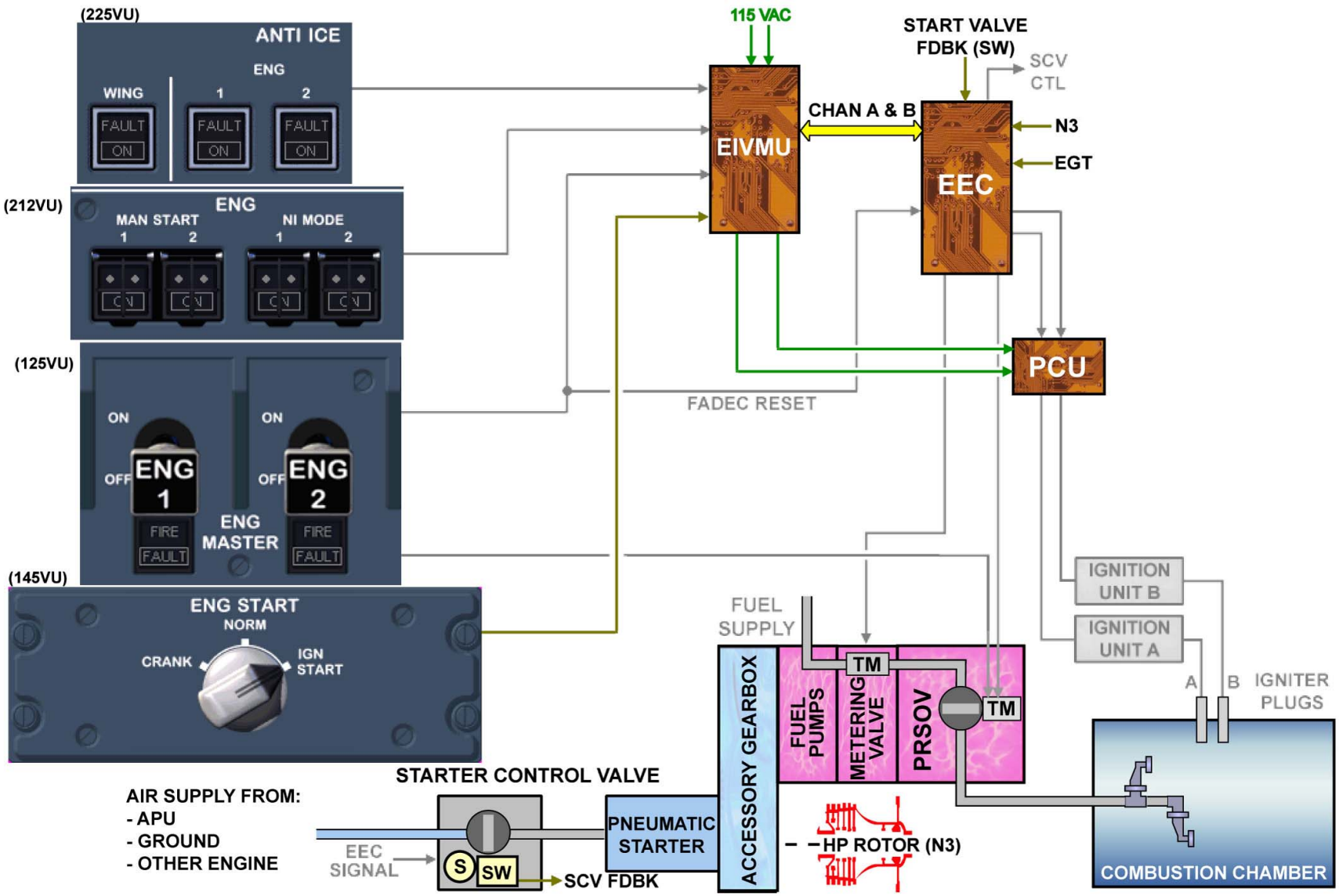

STARTING OPERATION - AUTOMATIC AND MANUAL START ABORT

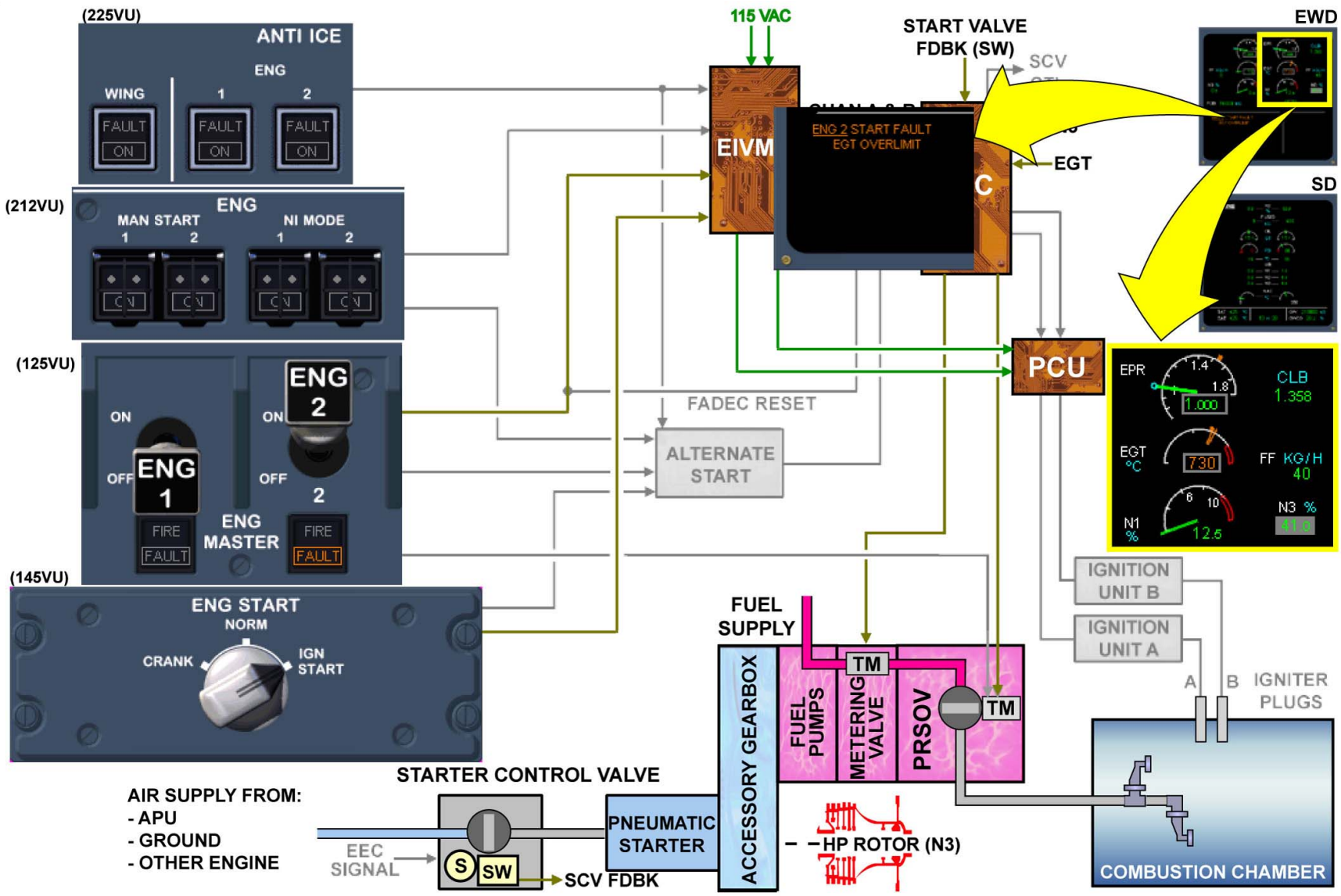

STARTING OPERATION - AUTOMATIC AND MANUAL START ABORT

G7508471 - G3NT1T0 - FM70DC000000071

IGNITION AND STARTING D/O (3)

CONTINUOUS IGNITION OPERATION

Besides the normal automatic or manual start modes, the EEC is able to control continuous ignition depending on cockpit selections, or on an abnormal engine condition detection. In each case, the purpose of the continuous ignition selection is to maintain or recover normal engine operation. Both igniter plugs are energized in the continuous ignition mode and "IGNITION" indication is shown on the ECAM memo display.

MANUAL SELECTION OF CONTINUOUS IGNITION

Continuous ignition may be manually selected when the engine is running by moving the ENG START rotary selector to IGN/START position.

AUTOMATIC SELECTION OF CONTINUOUS IGNITION

Continuous ignition is set by the EEC while the engine is running if the ENG ANTI ICE P/B is selected ON.
The EEC AUTOMATIC RELIGHT function energizes both igniters to give protection from an engine flame-out condition at idle. The automatic relight function is armed when the ENG MASTER switch is ON and the engine has started normally. The EEC then monitors the rate of change of N3 rotor speed at idle and compares it to a minimum datum calculated from the burner pressure (P30). If a flame-out condition is detected, both igniters are continuously energized until 10 seconds after normal engine operation is recovered.
The flight crew can initiate an engine QUICK RELIGHT in flight in order to quickly re-start the engine without any action on the ENG START rotary selector. This is done when the ENG MASTER switch is moved from OFF to ON within 30 seconds, and with N3 higher than 10%.
For the quick relight function, the EEC ignores the usual automatic start checks and the position of the ENG START rotary selector. It immediately opens the fuel metering valve and PRSOV and energizes both igniter plugs.

AUTOMATIC PROTECTION IN CASE OF RAIN/HAIL INGESTION

During bad weather conditions, the ingestion of large quantity of water and/or hail in the core engine can cause a sudden decrease of the burner temperature (T30), inducing a risk of engine flame-out. In such conditions, to prevent engine flame-out, the EEC energizes both igniter plugs to get continuous ignition.

NOTE: Note: that in addition, the EEC increases the N3 rotor speed in relation to T30 value and opens the core engine bleed valves to send the water into the by-pass casing.
Note: the rain/hail ingestion logic is not active on ground to avoid unwanted thrust increase while the aircraft is taxiing.

G7508471 - G3NT1T0 - FM70DC000000071

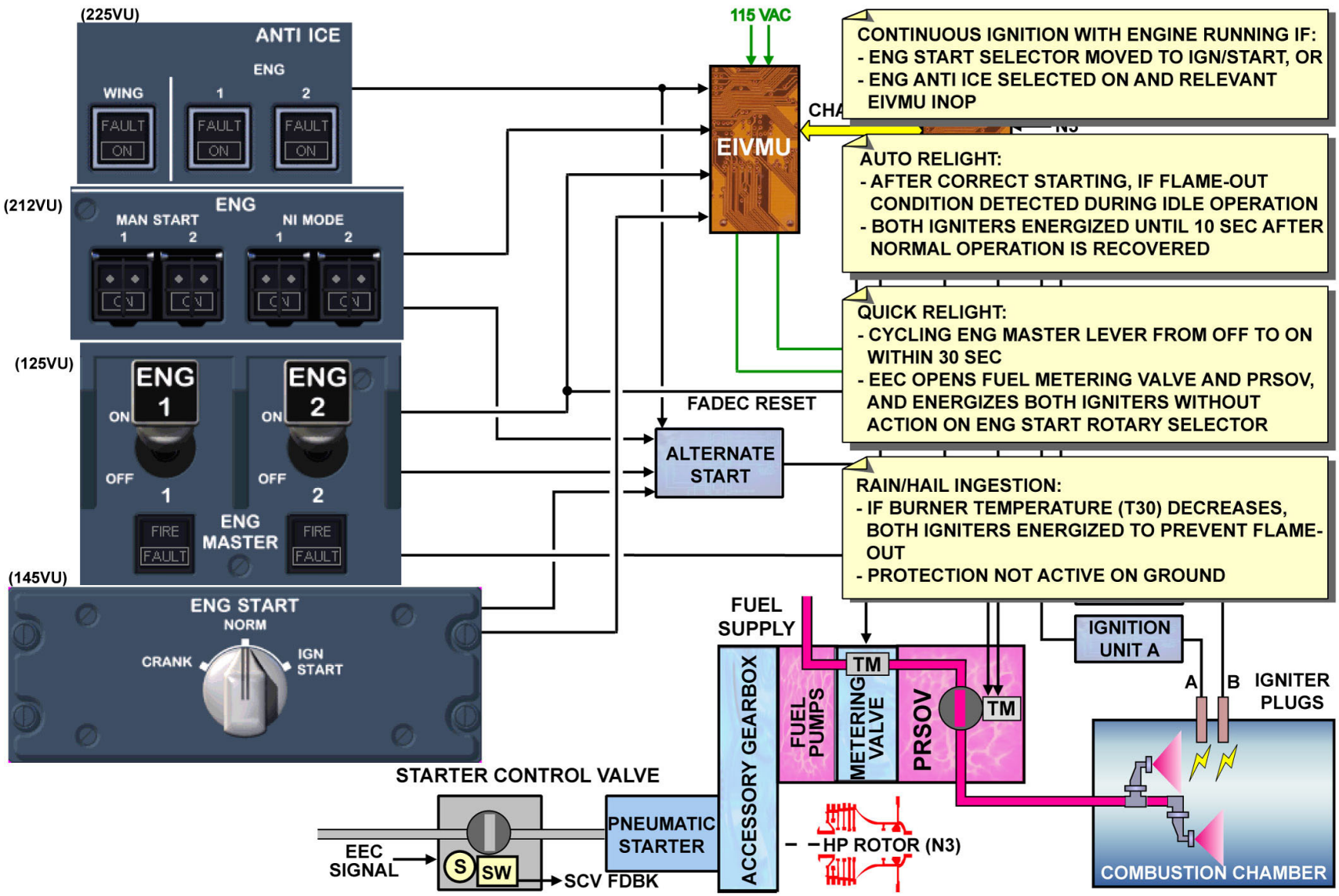

CONTINUOUS IGNITION OPERATION - MANUAL SELECTION OF CONTINUOUS IGNITION ... AUTOMATIC PROTECTION IN CASE OF RAIN/HAIL INGESTION

G7508471 - G3NT1T0 - FM70DC000000071

IGNITION AND STARTING D/O (3)

ENGINE MOTORING

The FADEC gives two modes of engine motoring: dry and wet. Mode selection is done by the EEC according to the EIVMU digital input which reflects cockpit settings.
A dry motoring sequence can be initiated with valid EIVMU data or via the alternate start logic circuit when the EIVMU data is invalid.
Wet motoring can only be initiated with valid EIVMU data.

DRY MOTORING

The engine dry motoring initial configuration is:
- ENG MASTER switch set to OFF position,
- ENG START rotary selector set to NORM position,
- electrical power available,
- air pressure available and above 30 psi.

To initiate dry motoring, set the ENG START rotary selector to the CRANK position. The EECs are then powered and the ENGINE system page comes up automatically on the ECAM SD, showing the SCV position and the bleed pressure available to the SCV.
When the ENG MAN START P/B is set to the ON position, the associated EEC controls the SCV to open by energizing its solenoid.
The pneumatic starter rotates the N3 rotor.
Continuous operation of the pneumatic starter is limited; the starter cycle must not exceed 5 minutes.
It is possible to interrupt the dry motoring procedure at any time by releasing out the ENG MAN START P/B.

G7508471 - G3NT1T0 - FM70DC000000071

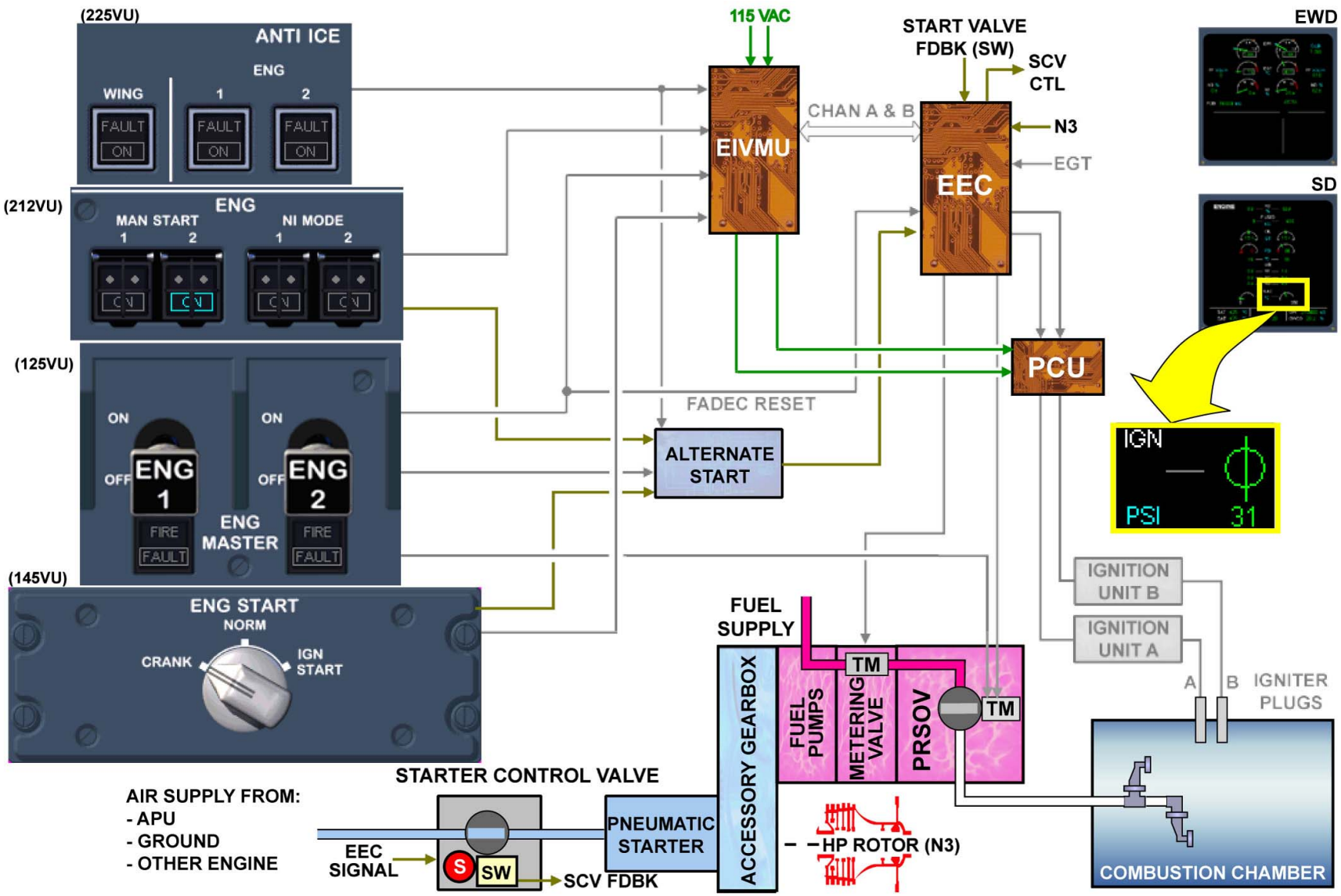

ENGINE MOTORING - DRY MOTORING

IGNITION AND STARTING D/O (3)

ENGINE MOTORING (continued)

WET MOTORING

The engine wet motoring initial configuration is the same as for the dry motoring initial configuration, but with engine fuel supply available and the engine ignition C/Bs pulled for safety.
To initiate wet motoring, set the ENG START rotary selector to the CRANK position. The EECs are then powered and the ENGINE system page comes up automatically on the ECAM SD, showing the SCV position and the bleed pressure available to the SCV.
When the ENG MAN START P/B is set to ON position, the associated EEC controls the SCV to open by energizing its solenoid. The pneumatic starter rotates the N3 rotor.
When N3 reaches at least 20%, the associated ENG MASTER switch has to be selected ON. Then, the EEC commands the fuel supply by opening the metering valve and the PRSOV.
After fuel flow confirmation, selecting the ENG MASTER switch to OFF stops the fuel flow and initiates a dry motoring procedure. The engine continues to motor without fuel supply to allow the combustion chamber to dry out. The wet motoring sequence can be aborted by placing the ENG MANual START P/B switch in the OFF position or by moving the ENG START rotary selector back to the NORM position.

G7508471 - G3NT1T0 - FM70DC000000071

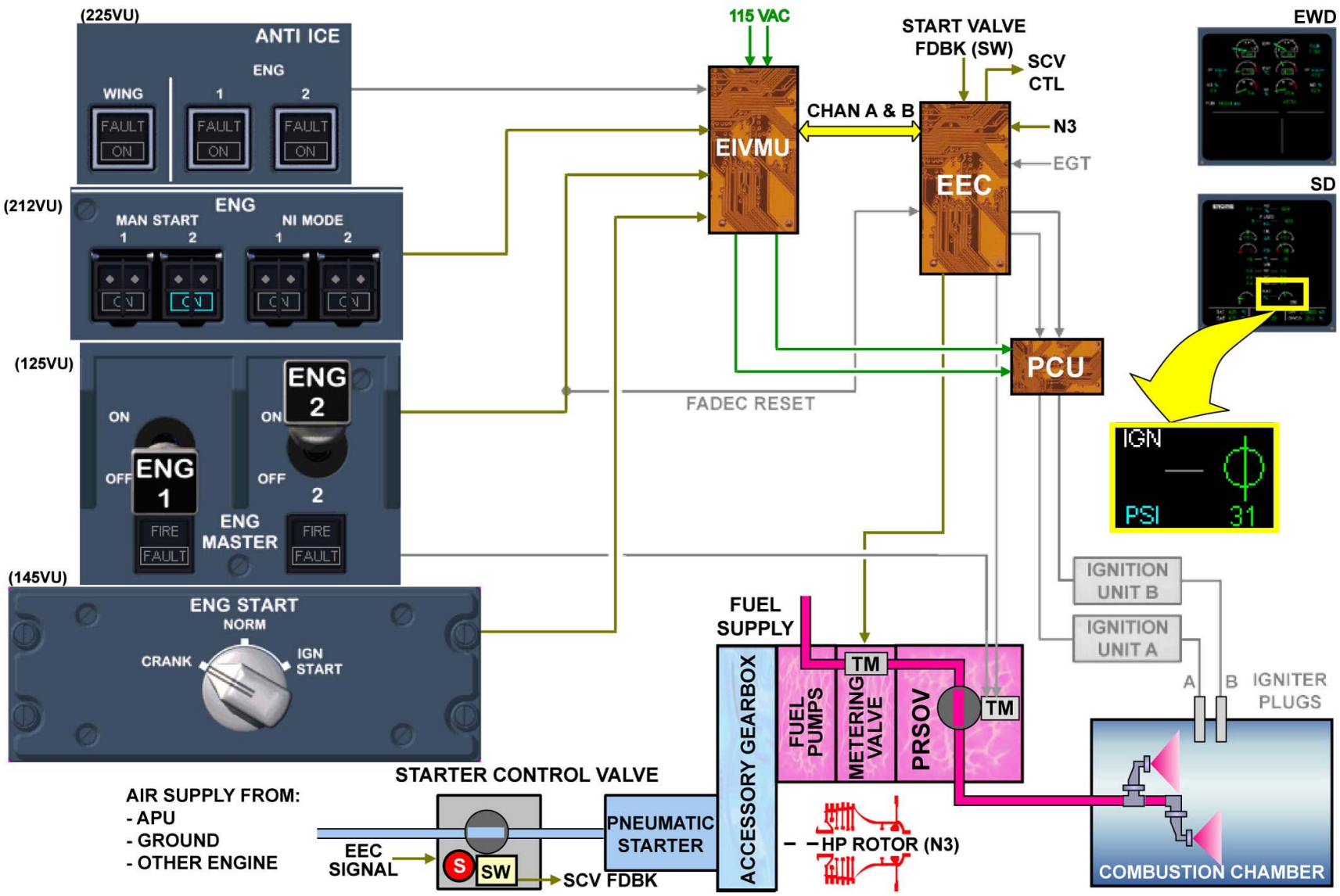

ENGINE MOTORING - WET MOTORING

AIRFLOW CONTROL SYSTEM D/O (3)

GENERAL

The function of the airflow control system is to fulfill a stable airflow through the Intermediate Pressure (IP) and High Pressure (HP) compressors at any thrust ranges to avoid engine stall or surge. It also controls the volume of airflow through the IP and HP compressors.
To control the airflow, the system uses:
- Variable Inlet Guide Vanes (VIGVs) and two stages of IP compressor Variable Stator Vanes (VSVs),
- four IP bleed valves in line with stage 8 of the IP compressor,
- three HP bleed valves in line with stage 3 of the HP compressor.

The airflow control system is controlled by the Engine Electronic Controller (EEC).

G7508471 - G3NT1T0 - FM70D400000071

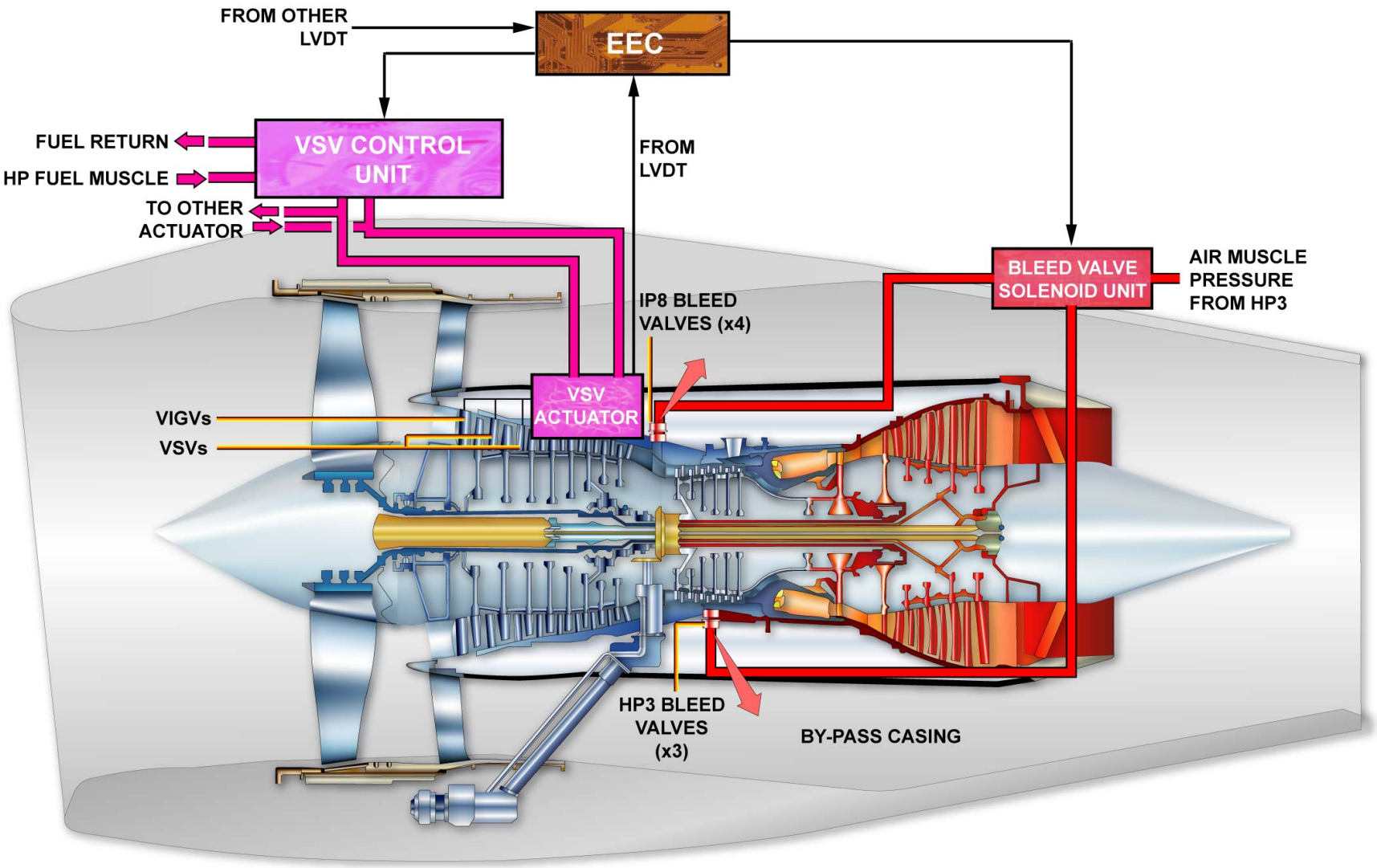
FROM OTHER LVDT
EEC
FUEL RETURN
HP FUEL MUSCLE
VSV CONTROL UNIT
TO OTHER ACTUATOR
FROM LVDT
BLEED VALVE SOLENOID UNIT
AIR MUSCLE PRESSURE FROM HP3
IP8 BLEED VALVES (x4)
VSV ACTUATOR
VIGVs
VSVs
HP3 BLEED VALVES (x3)
BY-PASS CASING

GENERAL

AIRFLOW CONTROL SYSTEM D/O (3)

VIGV/VSV DESCRIPTION

The IP compressor VIGV/VSV system includes:
- one VSV control unit,
- two VSV actuators,
- VIGV/VSV actuating mechanism.

VSV CONTROL UNIT

The VSV control unit is used to control the VSV actuators position using fuel servo pressure. It is installed on the lower left side of the compressor intermediate case.
The VSV control unit mainly has a torque motor and a control servo valve which control the flow of servo fuel to and from the VSV actuators.

VSV ACTUATORS

Two VSV actuators are installed 180 degrees apart on each side of the engine horizontal center line. Each actuator controls the movement of the VIGVs and VSVs through the VIGV/VSV actuating mechanism.
They are actuated by servo fuel pressure from the VSV control unit.
When the actuator retracts, the VSVs open and when it extends, the VSVs close.
Each actuator has a Linear Variable Differential Transducer (LVDT) for position feedback.
The LH actuator sends the LVDT information to EEC channel A and, respectively, the RH actuator sends the LVDT information to EEC channel B.
Each actuator also has a fuel drain tube.

VIGV/VSV ACTUATING MECHANISM

The VIGV/VSV actuating mechanism is installed around the LP/IP bearing support assembly and the IP compressor case.
It changes the linear movement of the actuator to the angular movement of the VIGVs and VSVs.

This actuating system includes rods, bellcranks and unison rings.

VIGV/VSV OPERATION

The VIGVs and VSVs are adjusted during starting, acceleration, deceleration and surge conditions to maintain the correct operation of the IP and the HP compressors.
The EEC uses IP compressor shaft speed (N2) and the IP compressor inlet temperature (T24) signals to control the angular position of the VIGVs and VSVs. If these signals are not available the EEC uses signals based on a pressure ratio to control the VIGVs and VSVs.
Each LVDT sends its actuator position feedback to a different EEC channel.
If a failure of the electrical supply occurs, the VIGVs and VSVs are moved to their failsafe position (closed position), corresponding to a low speed position.

G7508471 - G3NT1T0 - FM70D400000071

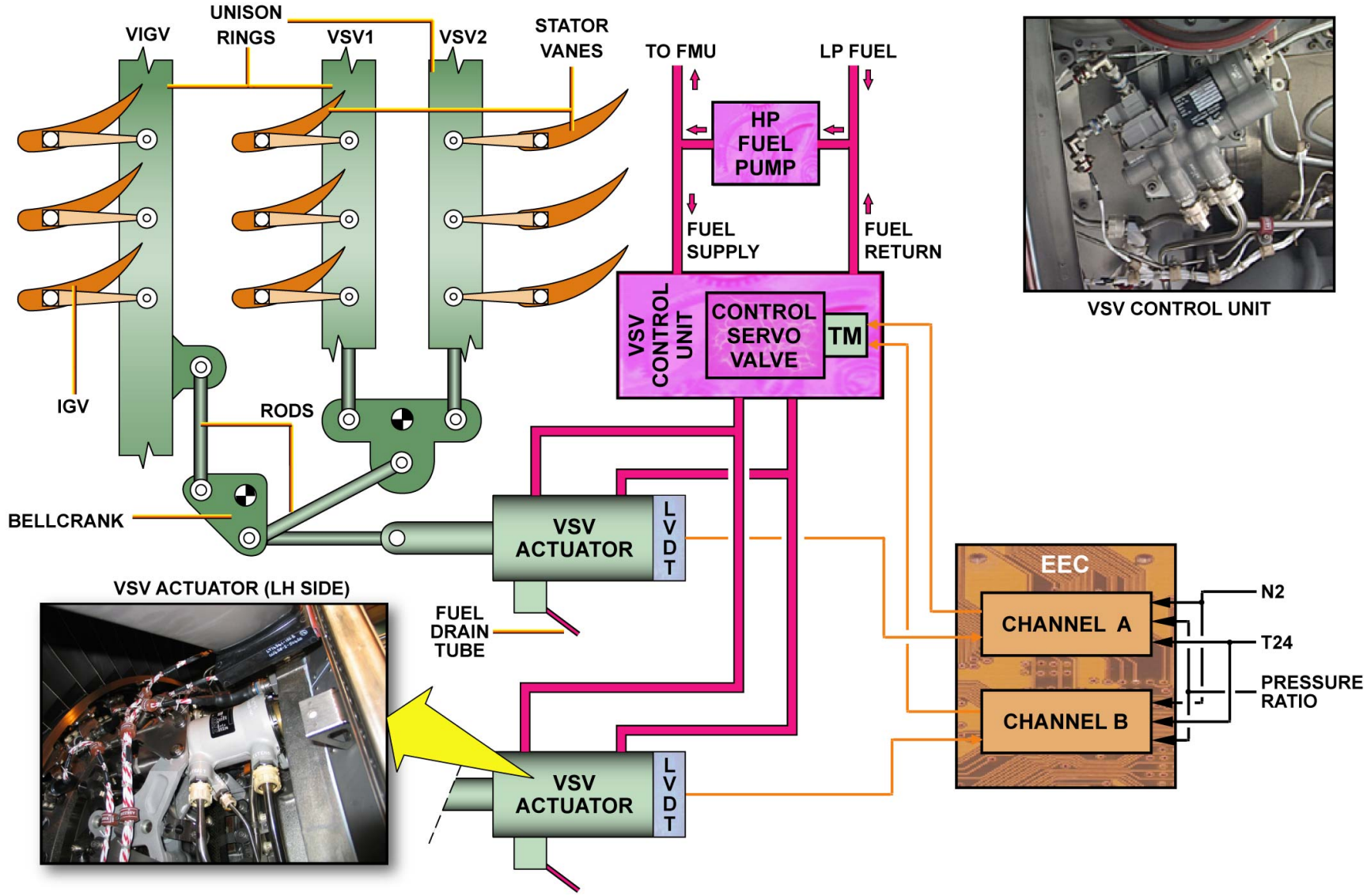

VIGV/VSV DESCRIPTION & VIGV/VSV OPERATION

AIRFLOW CONTROL SYSTEM D/O (3)

IP & HP BLEED VALVES DESCRIPTION

Seven bleed valves are installed around the IP and HP compressor. These valves are controlled via a bleed valve solenoid unit.

IP & HP BLEED VALVES

Four IP bleed valves are installed on and around the compressor intermediate case and aligned with stage 8 of the IP compressor.
Three HP bleed valves are installed near the front of the combustion outer case and aligned with stage 3 of the HP compressor.
Two HP bleed valves, HP3.3 and HP3.2, are installed at the top right and bottom right of the case.
The third one, HP3.1, is located at the bottom left of the case.
Each IP/HP bleed valve has a perforated silencer/seal assembly that seals the valve against the flat inner surface of the thrust reverser cowl.
The silencer goes through an opening in the thrust reverser cowl to discharge the compressor air in the fan stream.
The valves have internal chambers and springs for operation and are supplied with HP3 air muscle pressure from the bleed valve solenoid unit through its solenoid valves.

BLEED VALVE SOLENOID UNIT

The bleed valve solenoid unit is composed of five solenoid valves attached together to make one unit and it is installed on RH side in front of the compressor intermediate case.
Access is gained by opening the thrust reverser cowls and removing the right center gas generator fairing.
The four IP bleed valves are operated in pairs by two of the solenoid valves. The three HP bleed valves are operated by the remaining three solenoid valves.
The bleed valve solenoid unit has a pneumatic connector for HP3 air supply with two electrical connectors for EEC channel A and B electrical control.

Each solenoid valve has two coils: one linked to EEC channel A and the other to channel B. It can supply or stop HP3 servo air to open or close a bleed valve.

G7508471 - G3NT1T0 - FM70D400000071

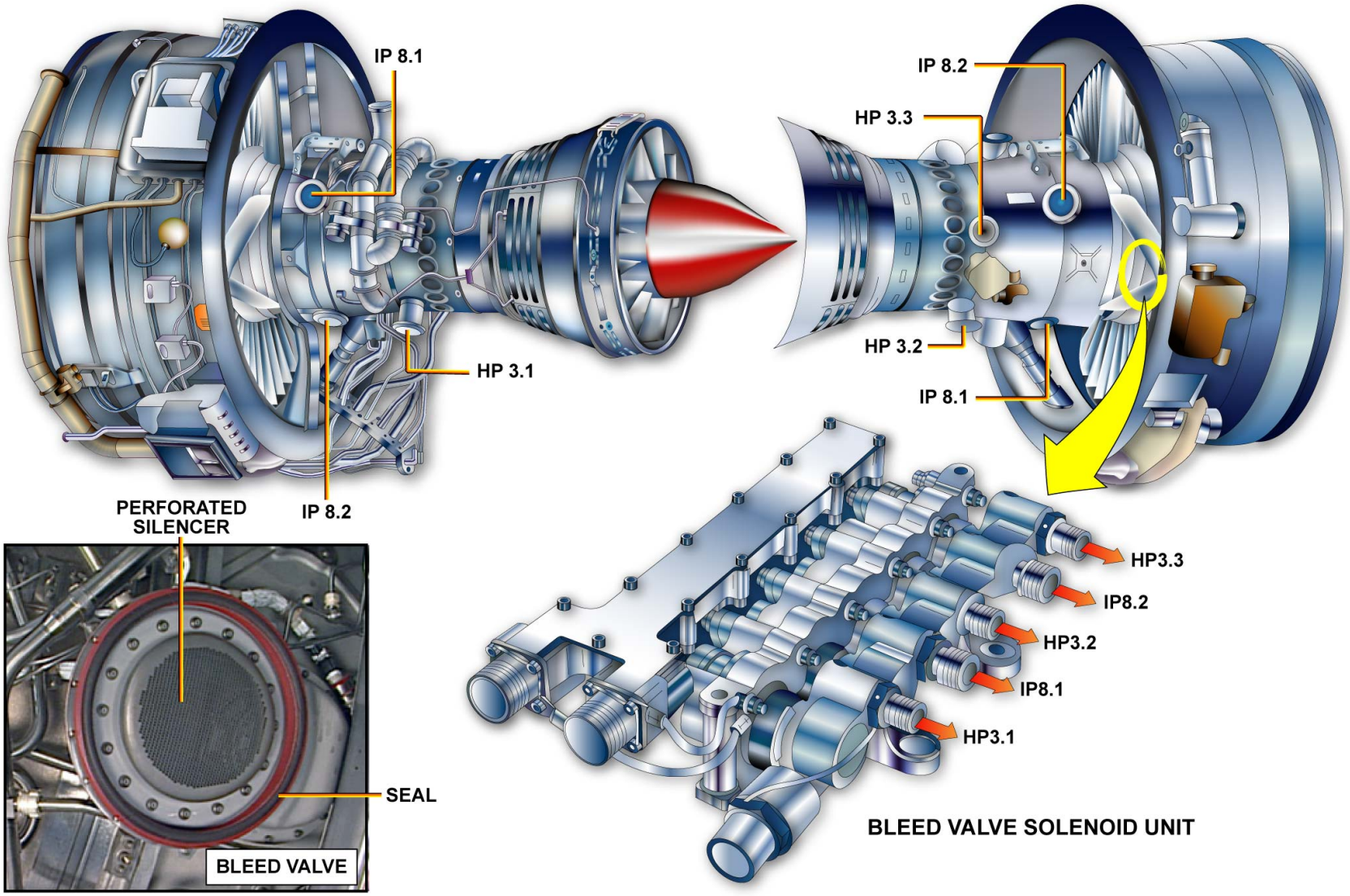

IP & HP BLEED VALVES DESCRIPTION - IP & HP BLEED VALVES & BLEED VALVE SOLENOID UNIT

AIRFLOW CONTROL SYSTEM D/O (3)

IP & HP BLEED VALVES OPERATION

IP and HP bleed valves are controlled to open during engine starting, at low engine speed and during specific conditions.
They are used to discharge a proportion of IP or HP compressor air into the engine by-pass casing.
The scheduling of the bleed valves is computed by the EEC and controlled through the bleed valve solenoid unit.
Each solenoid valve is connected to both channels of the EEC.
Each valve is independently operated as a function of N2 and IP compressor inlet temperature (T24) for the IP bleed valves, and as a function of N3 and T24 for the HP bleed valves. If these signals are not available the EEC uses signals based on a pressure ratio.
The EEC can also use signals from the Throttle Resolver Angle (TRA) to set each bleed valve.
When one HP/IP bleed valve solenoid is de-energized, HP3 air muscle pressure forces the corresponding valve to open in addition to the spring load.
When the solenoid is energized, HP3 air from the servo chamber is released through the solenoid valve. This lets the compressor air pressure close the bleed valves.
With no electrical control signal, the bleed valves are maintained in the open position by spring load.

G7508471 - G3NT1T0 - FM70D400000071

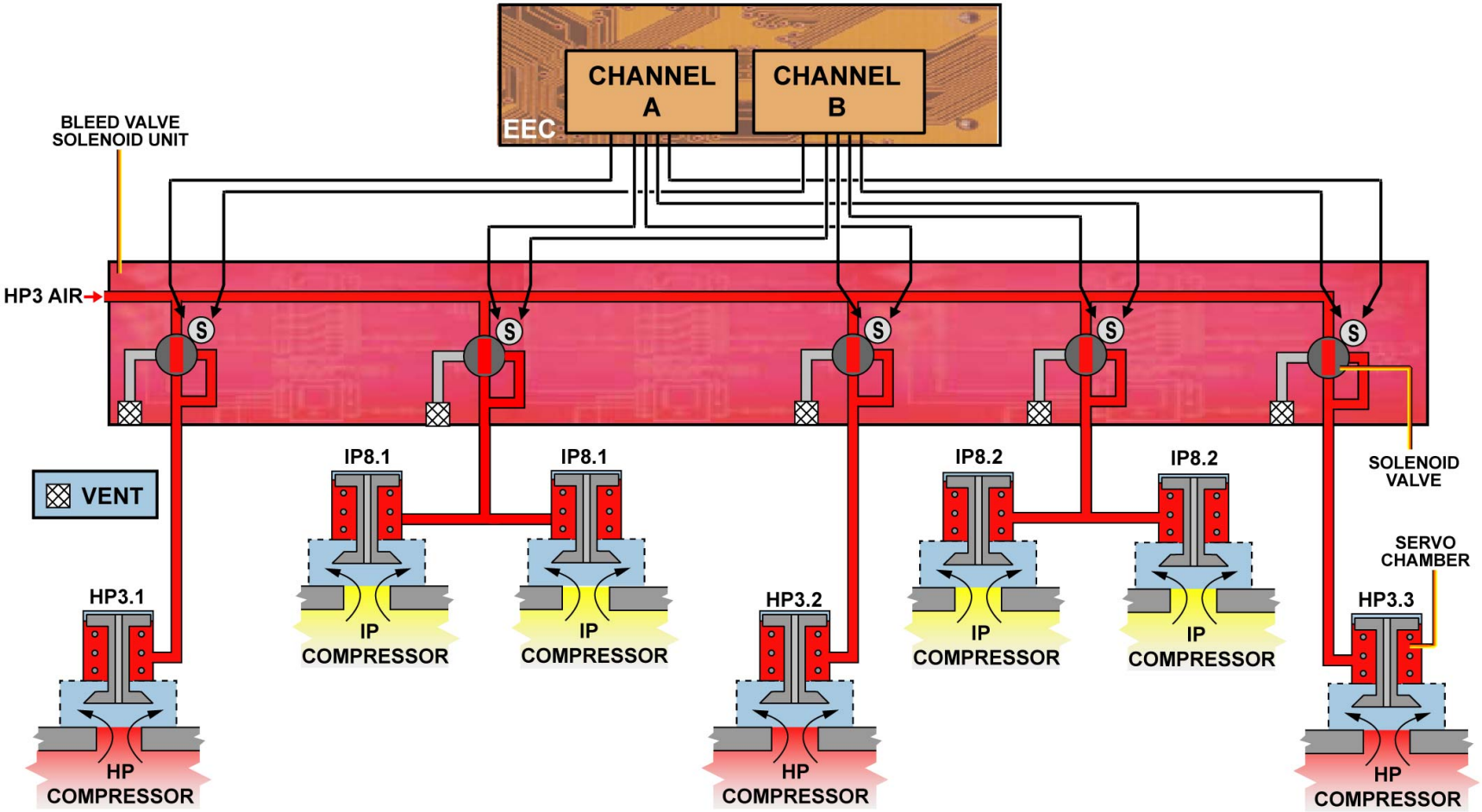

IP & HP BLEED VALVES OPERATION

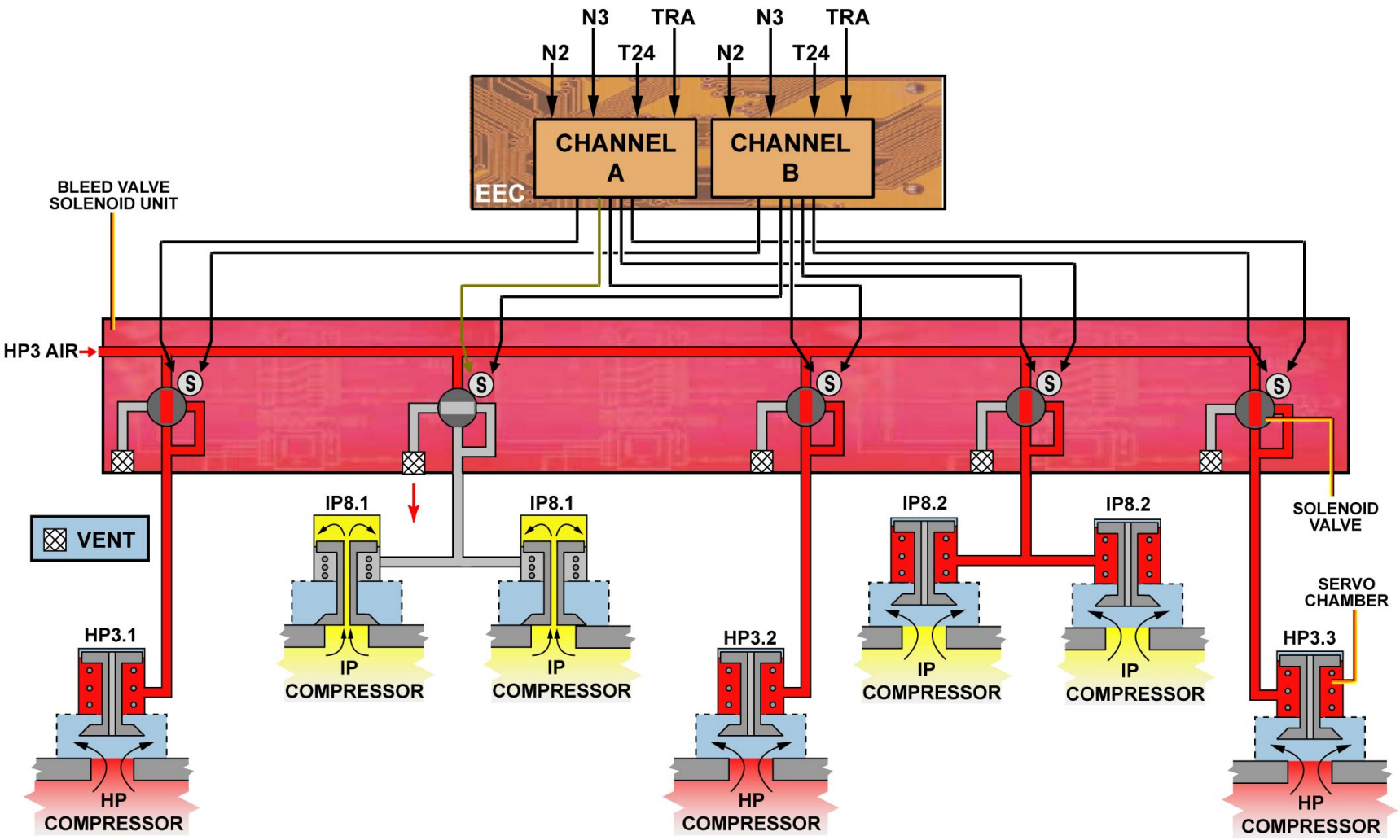

IP & HP BLEED VALVES OPERATION

G7508471 - G3NT1T0 - FM70D400000071

This Page Intentionally Left Blank

G7508471 - G3NT1T0 - FM70D400000071

ENGINE COOLING SYSTEM D/O (3)

GENERAL

Air is supplied from different sources to decrease the engine temperature through internal and external cooling. The air used to cool and pressurize the different engine compartments is supplied through external tubes and through internal passages. Internal compartments that are at different pressures are isolated from each other by labyrinth seals. For cooling, the nacelle is divided into 3 different zones. Cooling airflow is also provided for the Full Authority Digital Engine Control (FADEC) electronic units, located in the electronic unit protection box.
The Turbine Impingement Cooling (TIC) system supplies cooling air to the turbine cases maximize the turbine efficiency.

G7508471 - G3NT1T0 - FM70D500000071

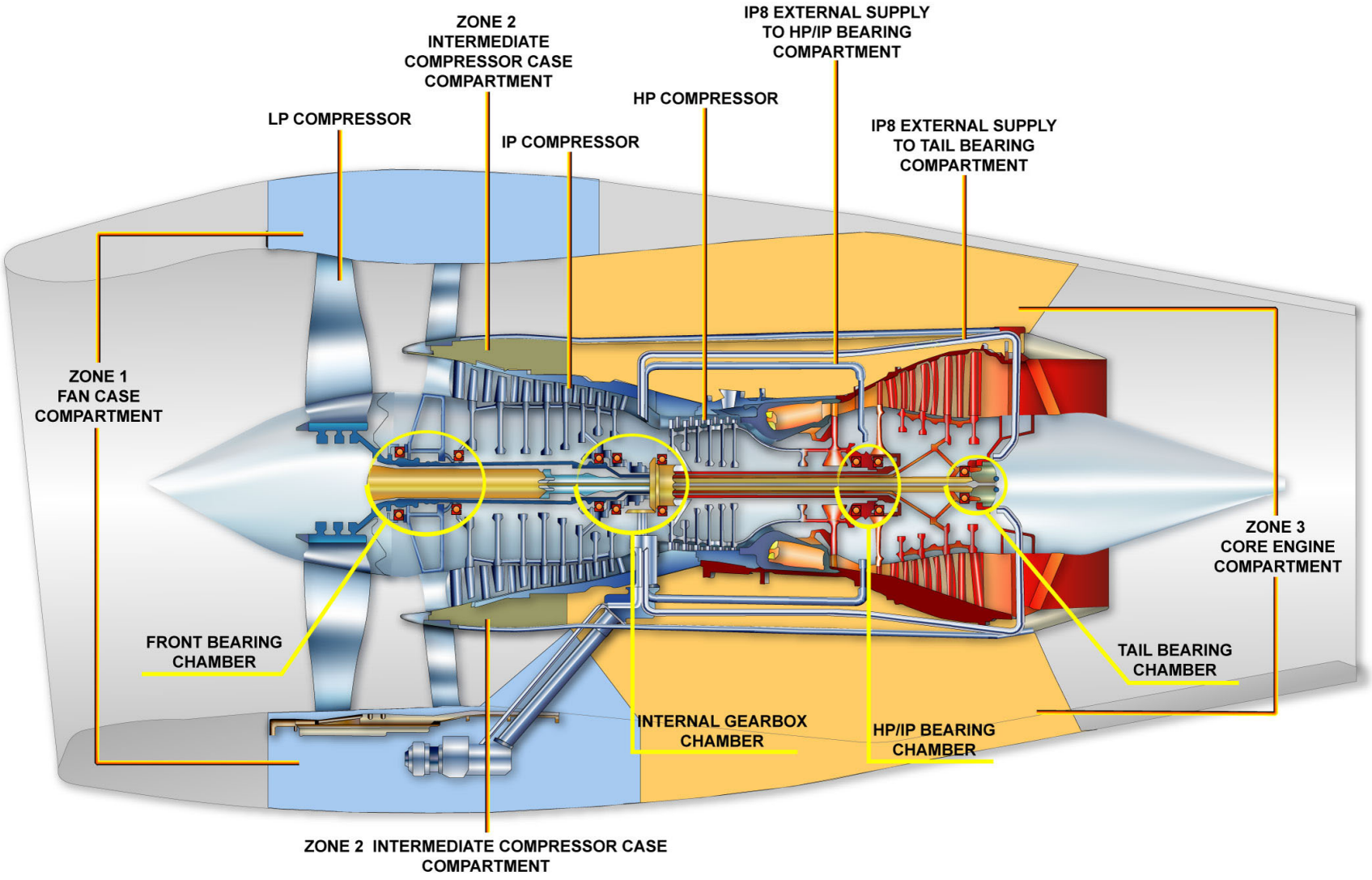

GENERAL

G7508471 - G3NT1T0 - FM70D500000071

ENGINE COOLING SYSTEM D/O (3)

NACELLE COOLING D/O

The powerplant is divided into three primary fire-resistant zones isolated from each other by fireproof bulkheads and seals. These zones are supplied with cooling airflow in order to:
- keep the temperature in the cowls at a satisfactory level,
- decrease the temperature of the main fuel and oil accessory units,
- prevent the accumulation of hazardous vapours.

Zone 1 - Fan Case Compartment:
The zone 1 is ventilated by ram air ducted through an opening on top of the air intake cowl, The ventilation air is exhausted through an opening in the lower part of the right hand fan cowl door.
Zone 2 - Intermediate Compressor Case Compartment:
The zone 2 is ventilated by air from the LP compressor that enters through two holes at the top rear of the zone and then flows around the zone. The ventilation air is exhausted at the bottom of the zone into the by-pass casing through two holes in the front of the engine core fairings.
Zone 3 - Core Engine Compartment:
The zone 3 is ventilated by air from the LP compressor that enters through ducts in the inner fixed structure of the 'C' ducts. The ventilation air is exhausted through an exit located at the bottom of the 'C' duct longitudinal beam.
A separate fire-resistant and cooling zone is the electronic unit protection box located on the left fan case. The FADEC electronic boxes are located in the protection box:
- the Engine Electronic Controller (EEC),
- the Power Control Unit (PCU),
- the Overspeed Protection Unit (OPU).The ventilation and cooling of the protection box is done by using external air from the air intake cowl that is ducted across the LP compressor case to the protection box. The cooling air flows out from the protection box and is ducted to the inlet of the LP compressor.

G7508471 - G3NT1T0 - FM70D500000071

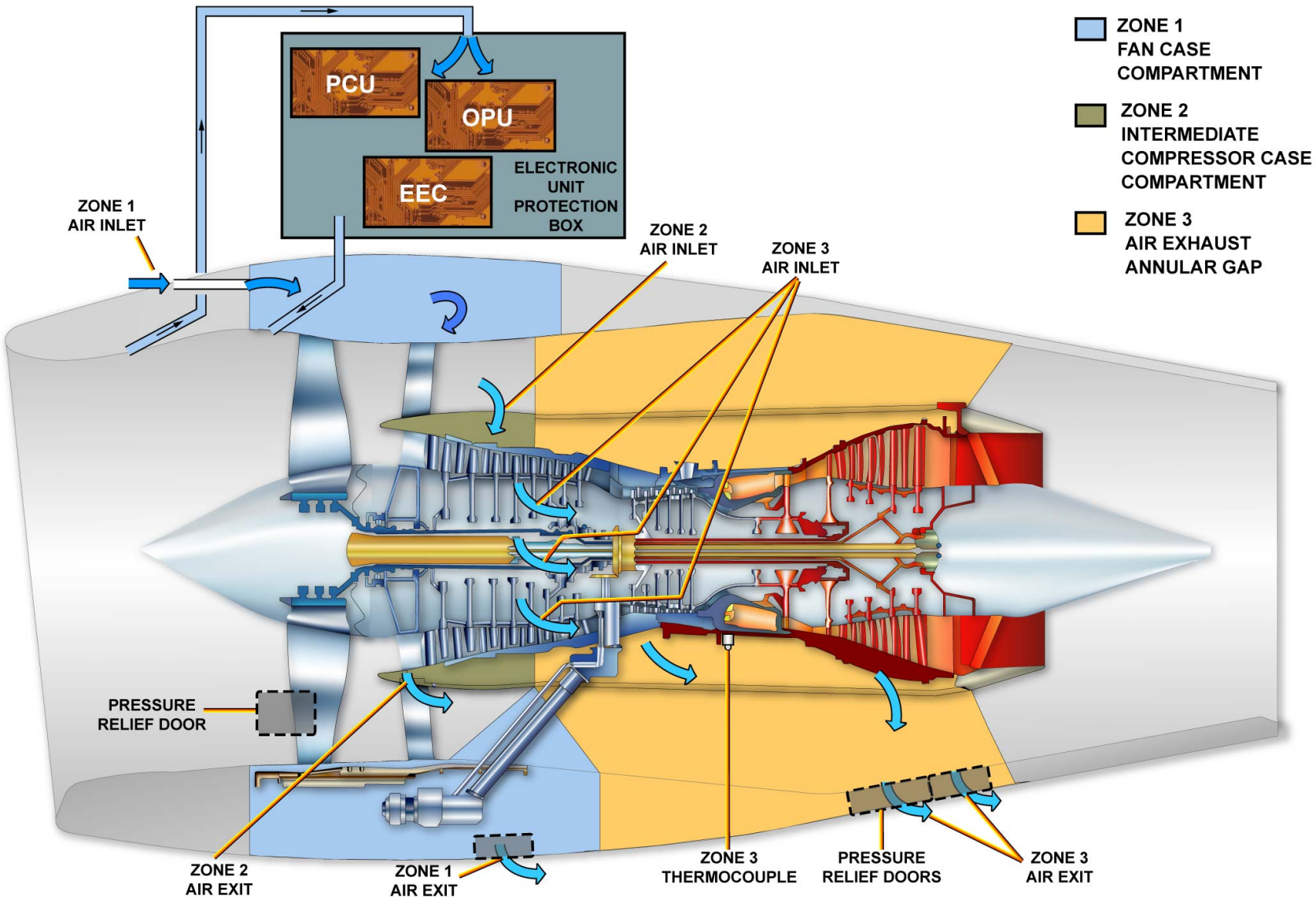

NACELLE COOLING D/O

G7508471 - G3NT1T0 - FM70D500000071

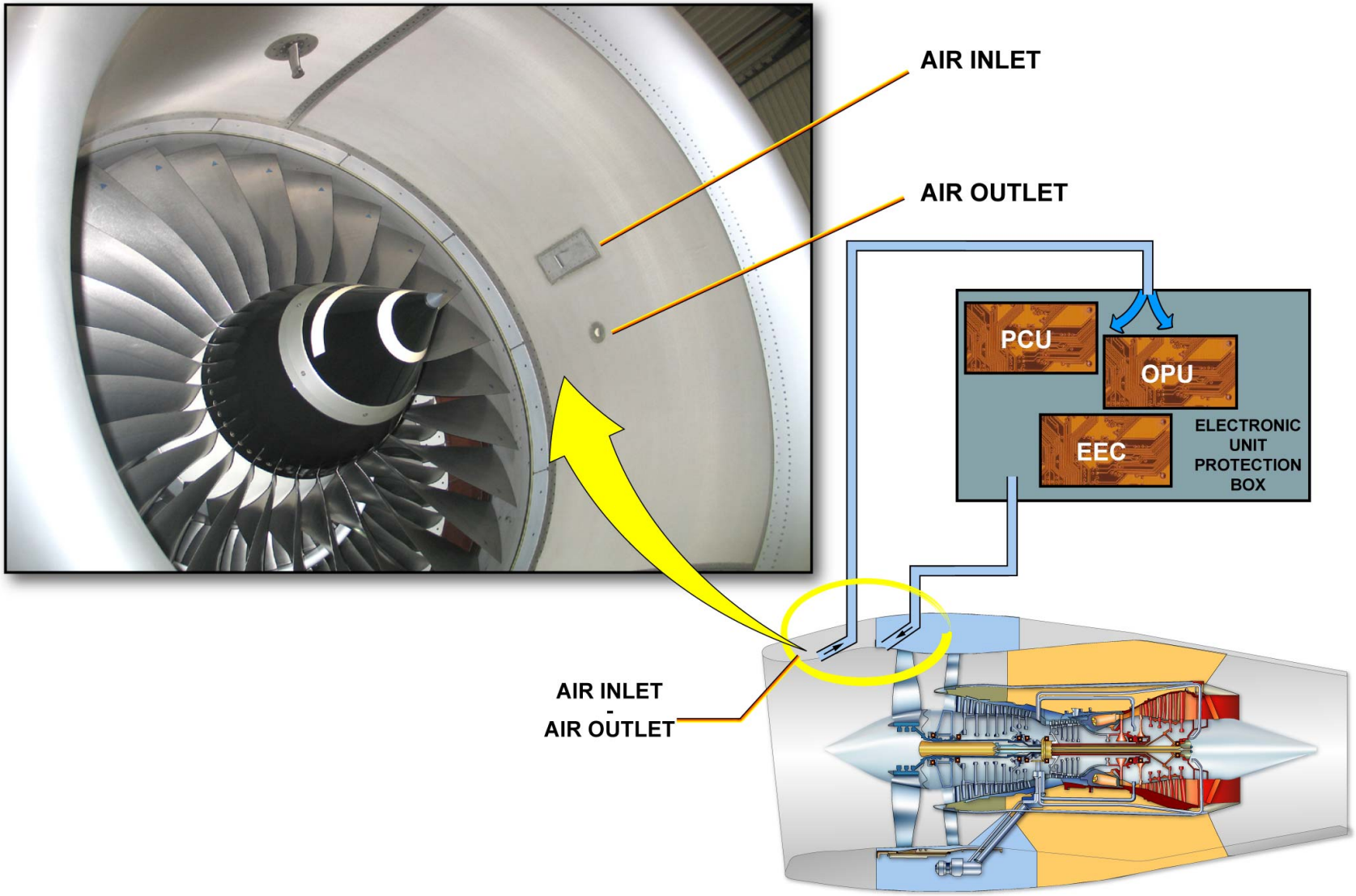

NACELLE COOLING D/O

G7508471 - G3NT1T0 - FM70D500000071

This Page Intentionally Left Blank

G7508471 - G3NT1T0 - FM70D500000071

ENGINE COOLING SYSTEM D/O (3)

TURBINE IMPINGEMENT COOLING (TIC) D/O

The TIC system is designed to maximize the turbine efficiency. During engine operation, the turbine cases heat up and expand at a higher rate than the turbine blades. This expansion increases the blade tip clearance. The TIC system supplies fan air to both the IP and LP turbine cases to control the IP turbine blade tip clearances and cool the LP case. The TIC valve is controlled by the EEC.

G7508471 - G3NT1T0 - FM70D500000071

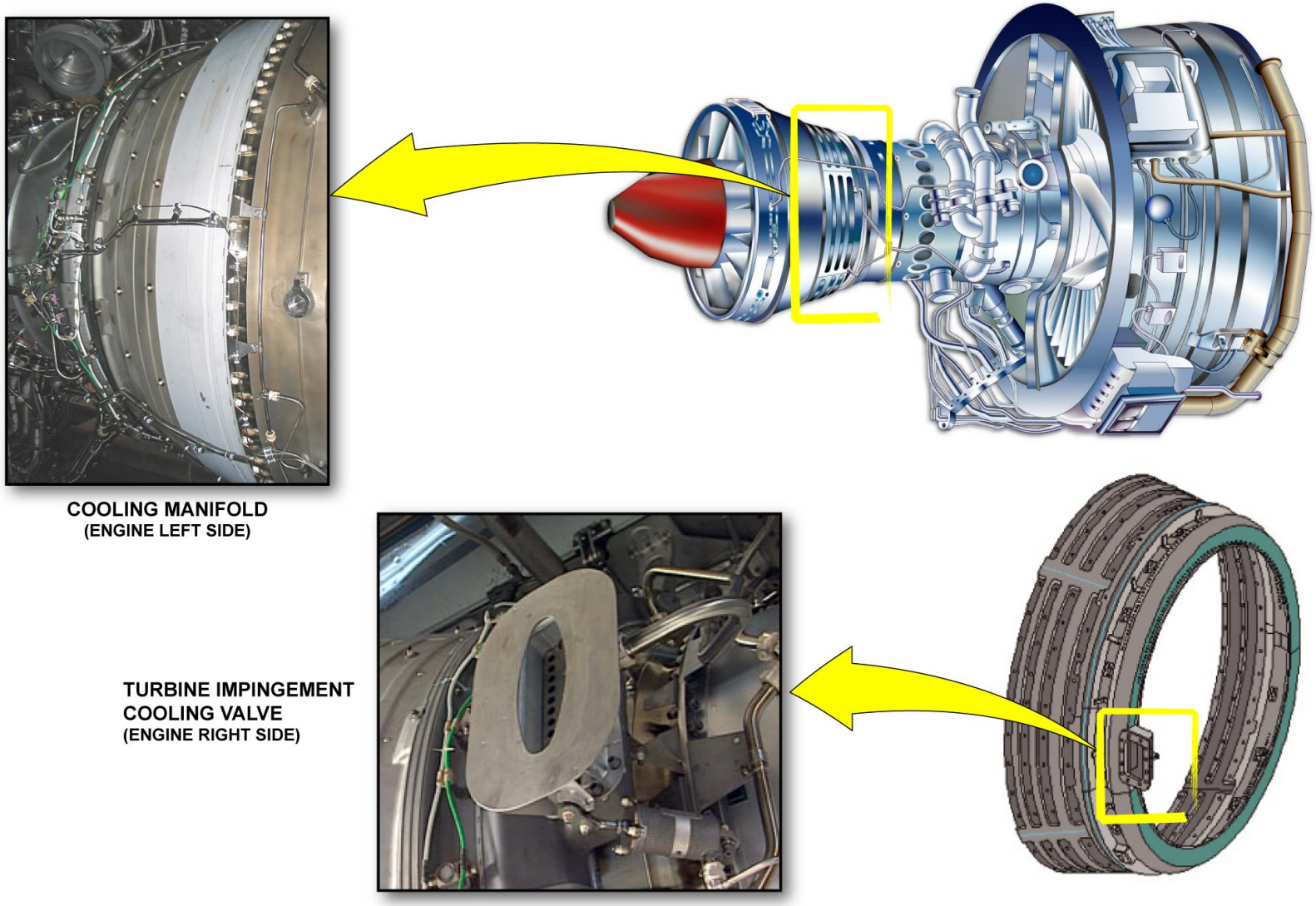

TURBINE IMPINGEMENT COOLING (TIC) D/O

ENGINE COOLING SYSTEM D/O (3)

TURBINE IMPINGEMENT COOLING (TIC) D/O (continued)

DESCRIPTION

The TIC system is composed of:
- a solenoid valve,
- an actuating ram,
- the TIC valve,
- a coolingmanifold.

OPERATION

The solenoid valve is attached to the bottom of the intermediate case. It is electrically controlled by the EEC and supplied with HP3 air. When energized, the solenoid valve sends HP3 air pressure to the actuating ram (piston). The TIC is only active during stable cruise mode and the EEC control is based on Engine Pressure Ratio (EPR) and Mach number, or N1 and A/C altitude. The actuating ram is attached to the HP/IP turbine casing and is pneumatically operated by the HP3 air pressure from the solenoid valve. The TIC valve is operated by the actuating ram, and is spring loaded closed. The valve is fully closed when the actuating ram is retracted, and it goes to the fully open position when the actuating ram is extended.
The cooling air is directed to the IP turbine casing through an air manifold with two lines of rows drilled at equal distance around its inner surface.
A liner assembly is installed around the LP turbine case to let the cooling air from the manifold flow around it.

G7508471 - G3NT1T0 - FM70D500000071

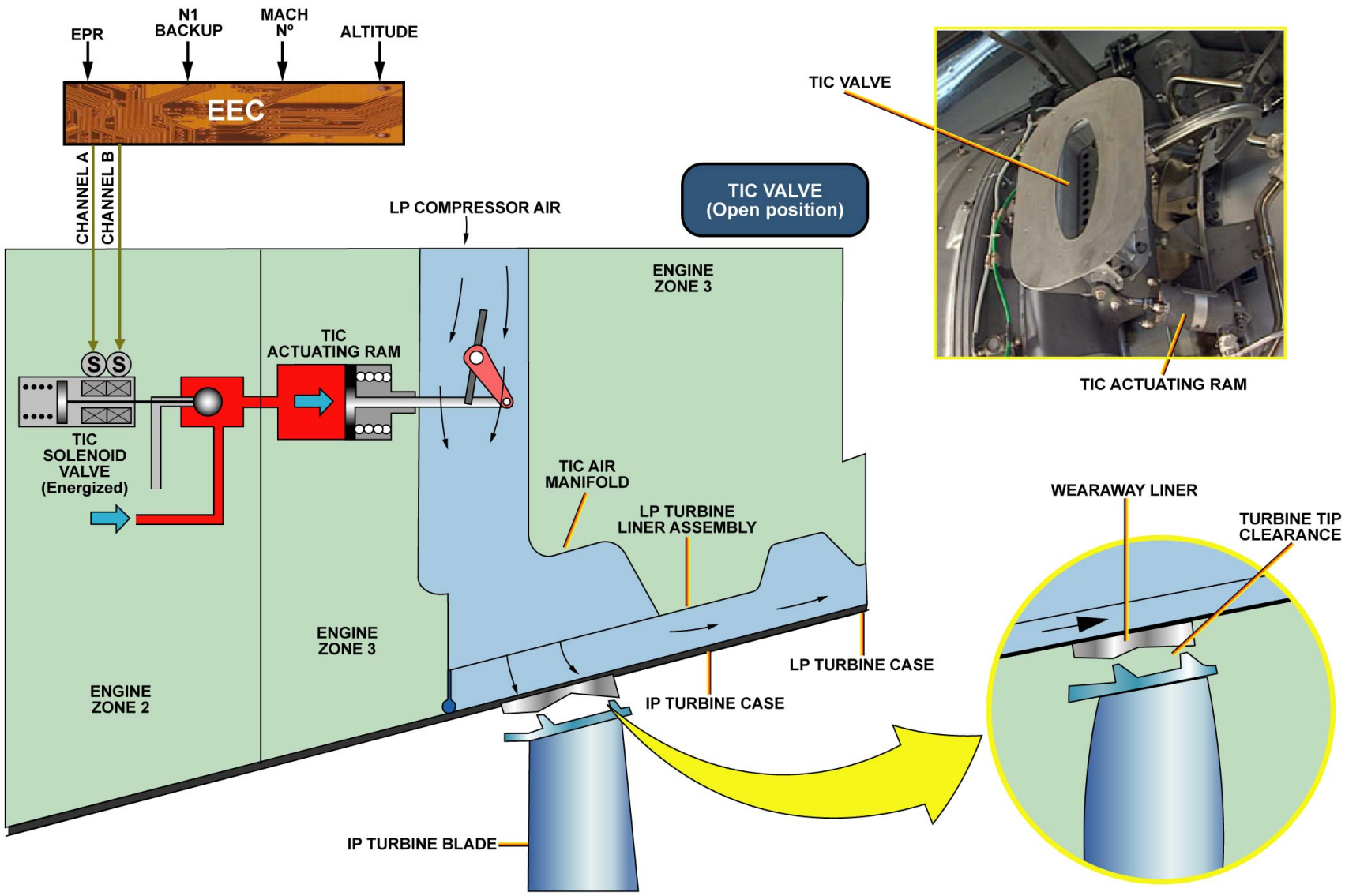

TURBINE IMPINGEMENT COOLING (TIC) D/O - DESCRIPTION & OPERATION

G7508471 - G3NT1T0 - FM70D500000071

THRUST CONTROL D/O (3)

GENERAL

The engine thrust is controlled by the Engine Electronic Controller (EEC).
The engine thrust can be set:
- Manually by the throttle control lever or,
- Automatically by the Auto Flight System (AFS).

The main thrust control parameter is the Engine Pressure Ratio (EPR).
The EPR is replaced by N1 (LP rotor) in reverse thrust or in backup mode.
The EPR is calculated by the EEC as a function of the total pressure at the engine inlet P20 and the total pressure at the core engine outlet P50.
It is expressed as a ratio: EPR = P50/P20.
The throttle control lever position is also used by the EEC to define the thrust limit mode and to compute the EPR rating limit.
The thrust limit mode and the EPR rating limit are used by the AFS in autothrust mode.
The thrust control parameters are displayed on the ECAM E/WD:
- EPR (actual),
- EPR (limit),
- Thrust Limit mode,
- N1.

G7508471 - G3NT1T0 - FM70DG00000071

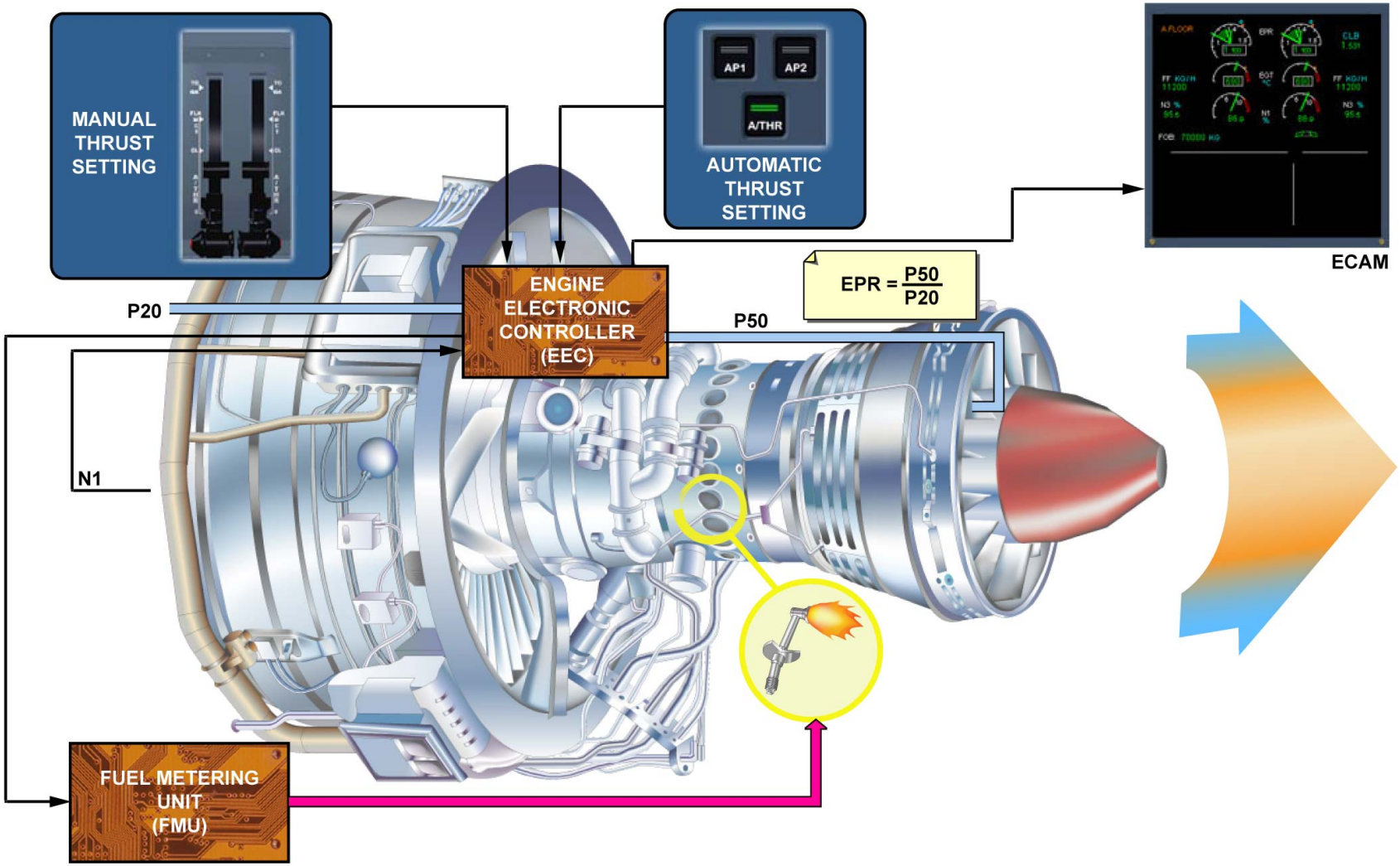
MANUAL THRUST SETTING
AP1
AP2
A/THR
AUTOMATIC THRUST SETTING
ECAM
ENGINE ELECTRONIC CONTROLLER (EEC)
EPR = P50 / P20
P20
P50
N1
FUEL METERING UNIT (FMU)

GENERAL

P20/T20 PROBE

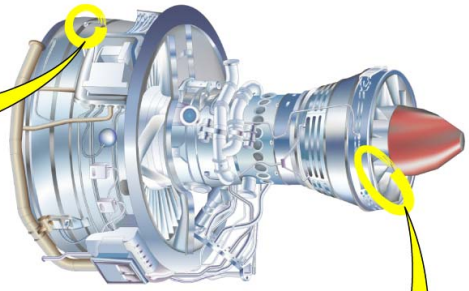

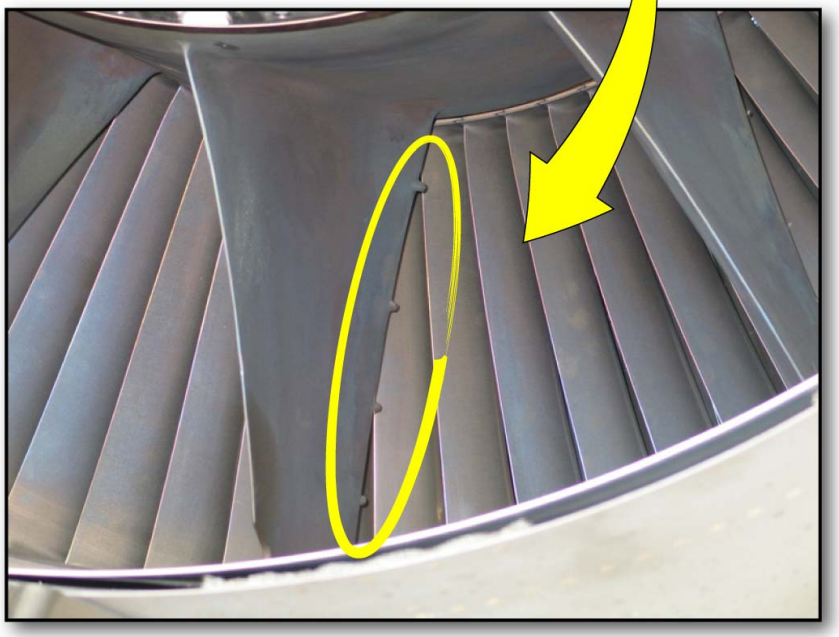

P50 TAPPING POINTS

GENERAL

G7508471 - G3NT1T0 - FM70DG00000071

This Page Intentionally Left Blank

G7508471 - G3NT1T0 - FM70DG00000071

THRUST CONTROL D/O (3)

GENERAL (continued)

MANUAL THRUST

The engines are in manual mode, provided the Autothrust (A/THR) function is not engaged, or is engaged and not active (throttle levers not in the A/THR operating range). In these conditions, each engine thrust is controlled by the position of its throttle control lever.
The thrust is controlled by moving the throttle control lever between IDLE and TOGA (Take Off Go Around) position. Each position of the throttle control lever within these limits corresponds to a predicted (or commanded) EPR. The blue circle on the EPR indicator corresponds to the predicted/commanded EPR. At the end of the thrust adjustment the actual EPR (green needle and digital indication) is aligned with the predicted/commanded EPR value. When the throttle control lever is in a detent, the related EPR is equal to the EPR rating limit computed by the EEC for this engine and displayed on the E/WD.
Between idle and max power, there are 2 detent positions:
- CL (Climb)
- FLX/MCT (Flex/Max Continuous Thrust)

During take-off the engine thrust is manually set at FLX/MCT or above (TOGA). The maximum TOGA thrust is calculated by the EEC based on ambient conditions and is displayed on the E/WD as soon as one engine is started.
In flight, the FLX/MCT detent is used for a single engine operation. Autothrust is available in this configuration.
The pilot has the option to use less than maximum thrust for takeoff based on specific conditions (altitude, temperature, A/C weight, runway length, etc.). This is known as a FLEX Takeoff. After consulting the Flight Manual (FM), the pilot enters a FLEX TEMP into the Flight Management System (FMS) through the MCDU. The throttle control lever is positioned in the FLX/MCT detent and a new lower thrust limit will be displayed on the E/WD.

G7508471 - G3NT1T0 - FM70DG00000071

Manual Thrust EPR mode or N1 mode.

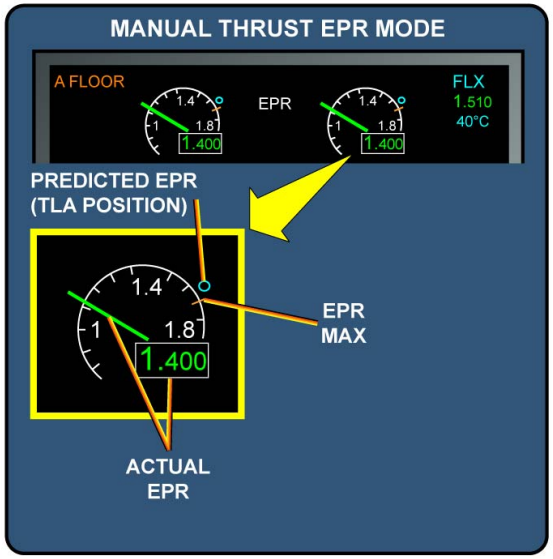

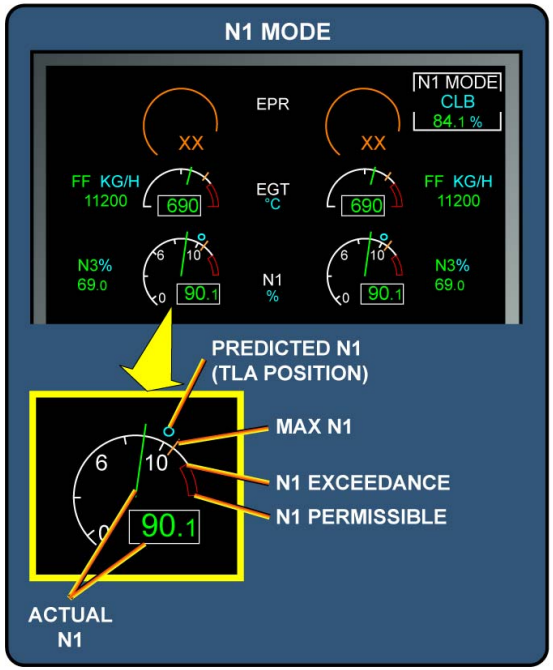

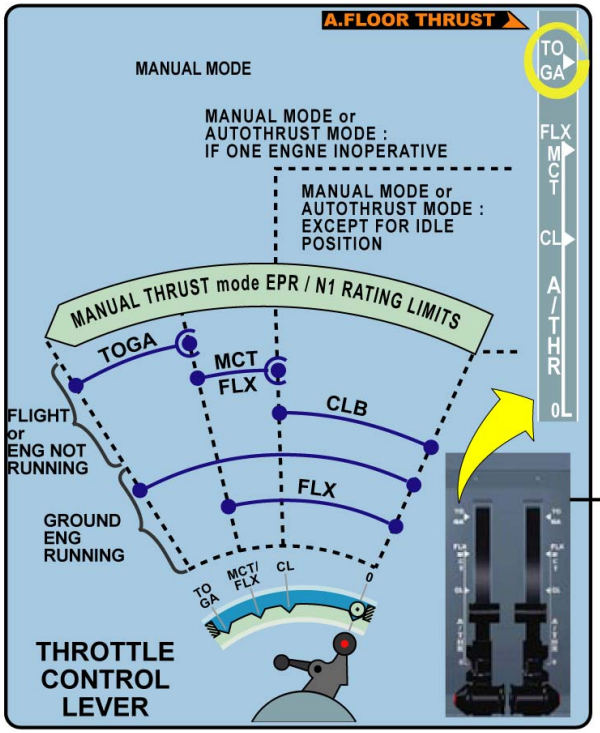

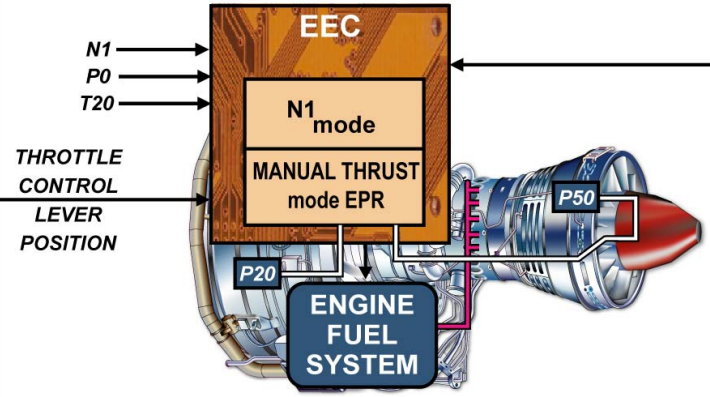

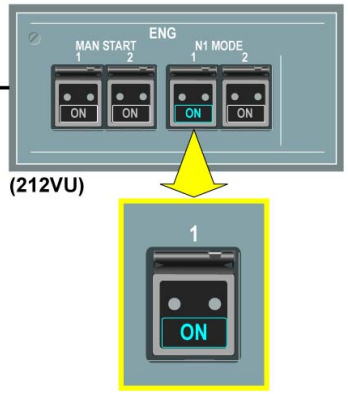

GENERAL - MANUAL THRUST

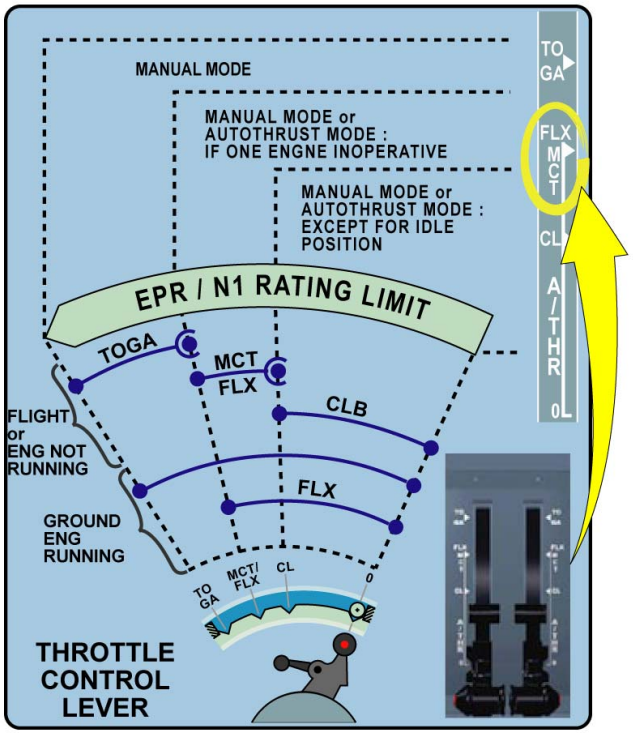

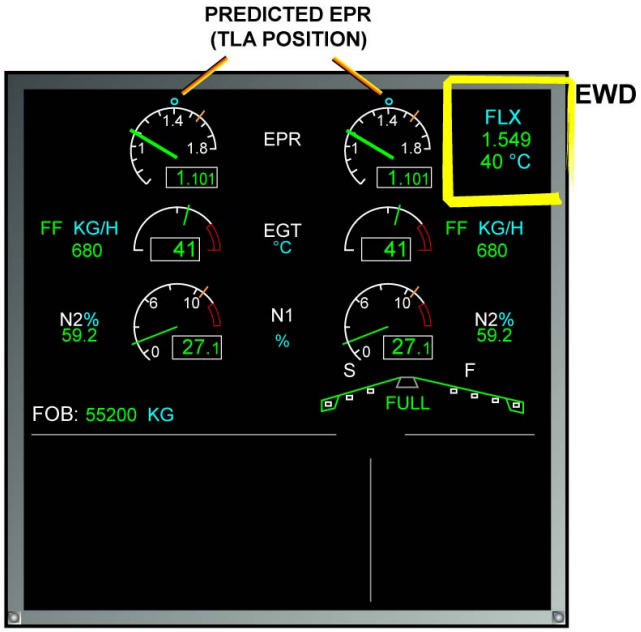

GENERAL - MANUAL THRUST

This Page Intentionally Left Blank

G7508471 - G3NT1T0 - FM70DG00000071

THRUST CONTROL D/O (3)

AUTOMATIC THRUST

A/THR is a function of the FMS. The FMS includes the Flight Management Guidance and Envelope Computers (FMGECs), the Flight Control Unit (FCU) and, the MCDUs.
The FCU is installed on the glareshield panel and the MCDUs are installed on the center pedestal. They are the interfaces between the flight crew and the FMGECs.
The FCU is equipped with an A/THR pushbutton to engage or to disengage the autothrust. When ENGAGED, the A/THR may be ACTIVE or NOT ACTIVE. The A/THR is ACTIVE when the thrust control levers are in the A/THR range (above IDLE to FLX/MCT detent), The A/THR is NOT ACTIVE when the thrust control levers are not in the A/THR range (at IDLE stop or above the FLX/MCT detent). The A/THR may also be disengaged using the Instinctive Disconnect Switch on the throttle control levers.
The MCDU is used to enter the flight plan and FLEX TAKEOFF Temperature. If equipped with the optional capability, derated take off and derated climb are also entered through the MCDU.
Alpha Floor (A.FLOOR) protection is used to prevent an aircraft stall. It is automatically activated by the FMGEC if the aircraft reaches an exccessive angle-of-attack. When activated, the maximum engine thrust (TOGA) is automatically commanded regardless of the throttle control lever position, with the autothrust engaged or not.

AUTOMATIC THRUST ENGAGEMENT

The A/THR pushbutton lets engage, or disconnect the A/THR. It comes on green when the A/THR is engaged.
The A/THR is active when it is engaged and the thrust levers are set in the A/THR operating range (between IDLE and CL).
Note that during take-off, the A/THR function is engaged but not active.

In case of reversion to N1 mode on one engine, the A/THR is deactivated.
The A/THR system can operate with or without the AP.
If the A/THR is working with the AP, the FMGEC commands the thrust according to the AP logic. The thrust is limited by the position of the throttle lever. (For example, when the throttle levers are set to CL, A/THR can command a thrust between IDLE and CL).
If the A/THR is working without the AP, the A/THR always controls the aircraft speed. The thrust is always limited by the position of the throttle lever.
In case of A/THR failure, the A.FLOOR protection is lost.

A/THR MODE DISCONNECTION

Standard disconnection, by pushing one of the instinctive disconnect Pushbuttons (P/Bs) on the throttle levers, the A/THR mode is disconnected and the thrust is set in manual mode, according to the actual throttle control lever position. If instinctive disconnect P/B is pushed and held for more than 15 seconds, all A/THR functions including A.FLOOR protection are lost for the flight in progress.
Setting all throttle levers to IDLE detent results in A/THR disconnection.
Non-standard disconnection results in activation of the thrust lock function when:
- the A/THR pushbutton is released out while A/THR is engaged or active, or
- the system looses one of the engagement conditions, or
- the throttle lever is set at CL or at MCT when one engine is inoperative.

The Thrust lock function is locked or frozen at the level set prior to the non standard disconnection. Moving the throttle levers out of CL (or MCT with one engine inoperative) cancels the thrust lock function, and the thrust reverts to manual control.

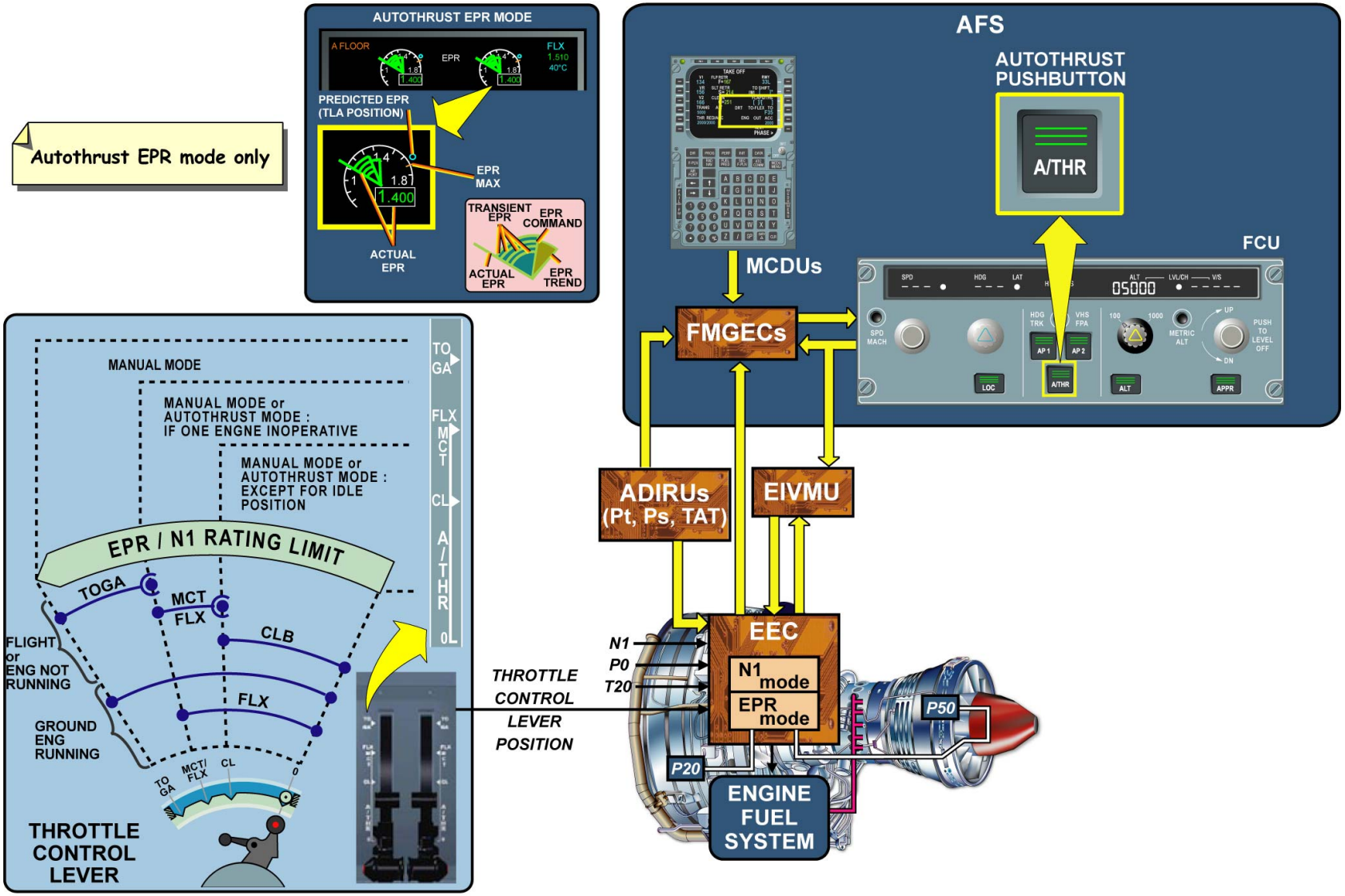

AUTOMATIC THRUST - AUTOMATIC THRUST ENGAGEMENT & A/THR MODE DISCONNECTION

THRUST CONTROL D/O (3)

EPR MODE OPERATION

EPR mode is the normal thrust control mode. The EEC computes the EPR command as a function of:
- TRA,
- altitude or static pressure (Ps or P0),
- total air pressure (Pt or P20),
- P50
- Total Air Temperature (TAT or T20),
- mach number,
- bleed demand.

The EPR rating limit is computed by the EEC, depending on the TRA, and is displayed in green on the upper ECAM. The EPR limit value displayed is the highest EPR limit value of the two engines.

N1 MODE OPERATION

If the EEC is unable to compute EPR, the engine thrust control automatically reverts to N1 mode. The N1 mode can also be commanded manually by selecting the ENG N1 MODE P/B ON. Upon automatic reversion to N1 mode, a thrust equivalent to that achieved in EPR mode is set and locked by the EEC until the operator changes the throttle control lever position. An ECAM message will be generated, requesting that the operator select BOTH engines to N1 mode keep the throttle control levers matched.
There are two N1 modes for thrust control. Depending on the failure conditions leading to EPR mode loss, the EEC will revert to either rated N1 or unrated N1 mode.

RATED N1 MODE

An automatic reversion to rated N1 mode occurs, when:
- engine P20 and / or P50 are not available,
- engine P20 is lower than Air Data/Inertial Reference Units (ADIRUs) Pt.

The EEC computes an EPR command, depending on the TLA, then converts it to an N1 command as a function of Mach number.
The displayed N1 rating limit is only computed in the N1 rated mode, according to the TRA. The Max thrust and throttle control lever position indications shift from the EPR indicator to the N1 indicator.

UNRATED N1 MODE

An automatic reversion to unrated N1 mode occurs, when:
- engine P20 and ADIRUs Pt are not available, or
- engine T20 and ADIRUs TAT are not available, or
- engine P0 and ADIRUs Ps are not available.

N1 command is defined as a function of the TLA and altitude. N1 is limited by the EEC to either the smaller of N1 max or N1 redline, depending on T20 availability. The N1 rating limit, predicted N1 (N1 TLA) and N1 MAX ECAM indications are lost. Basically, there is no engine limit protection in this mode.

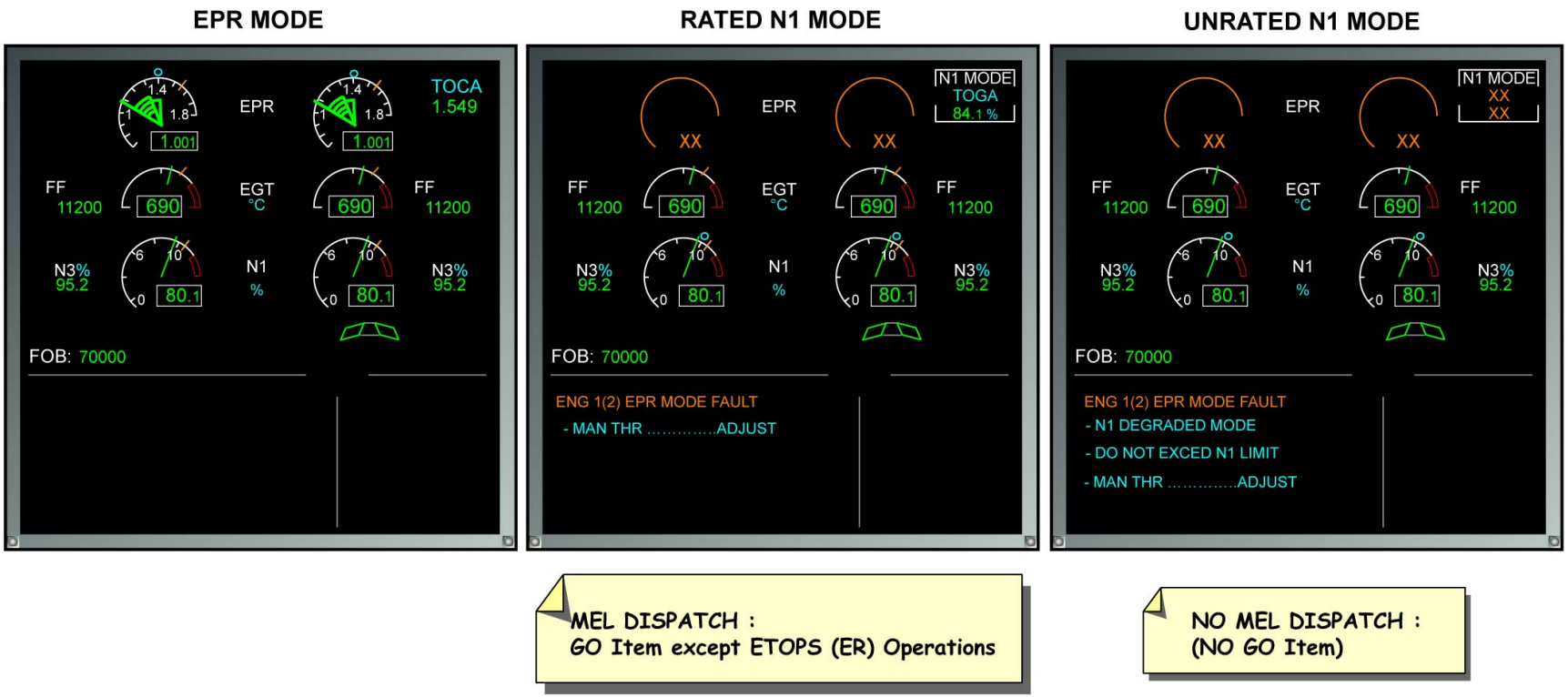

MEL DISPATCH :
GO Item except ETOPS (ER) Operations

NO MEL DISPATCH :
(NO GO Item)

EPR MODE OPERATION & N1 MODE OPERATION

THRUST CONTROL D/O (3)

THROTTLE CONTROL LEVER ASSEMBLY

Each throttle control lever mechanical assembly includes the throttle control lever connected to the artificial feel unit and a Throttle Control Unit (TCU) by adjustable rods. The throttle control lever incorporates the thrust reverse control lever and the Instinctive Disconnect P/B Switch for the A/THR.

THROTTLE CONTROL LEVERS

The throttle control lever position input to the TCU is the Throttle Lever Angle (TLA). The throttle control levers range of movement is from the IDLE stop (0° TLA) to the TOGA stop (55° TLA). There are two detents: CL and FLX/MCT.

THRUST REVERSER CONTROL LEVERS

The thrust reverser control lever position input to the TCU is the Reverser Lever Angle (RLA). The thrust reverser control levers range of movement is from the IDLE stop (0° RLA) to the MAX REVERSE stop (96° RLA). At 51.5° RLA there is a REVERSE IDLE detent point.

THROTTLE CONTROL ARTIFICIAL FEEL UNIT

The throttle control artificial feel unit is a friction system which supplies an artificial load feedback to the throttle control levers and the reverser control levers. The load may be adjusted on the unit using a specific load measuring tool.

THROTTLE CONTROL UNIT

The primary component of the TCU is the dual resolver. The resolver is a FADEC component, which receives its excitation current from the EEC and transmits the throttle control lever position signal back to the EEC. This signal is the throttle resolver angle (TRA).
The TRA signal is used to set the engine thrust in manual and reverse thrust. In automatic thrust, the TRA is used by the EEC to set the thrust limit. In other words, during normal autothrust operation, the engine thrust will likely be less than the thrust limit based on the throttle control lever position which is indicated by the cyan (blue) circle on the indicator.
The TCU also includes three potentiometers and a microswitch. The potentiometers are not part of the FADEC system but send throttle control lever position to the Flight Control Primary Computers (FCPCs) for control of the thrust reverser independent locking system tertiary locks. The microswitch sends a "thrust reverse selected" signal to the EIVMU for thrust reverser deployment control.

G7508471 - G3NT1T0 - FM70DG00000071

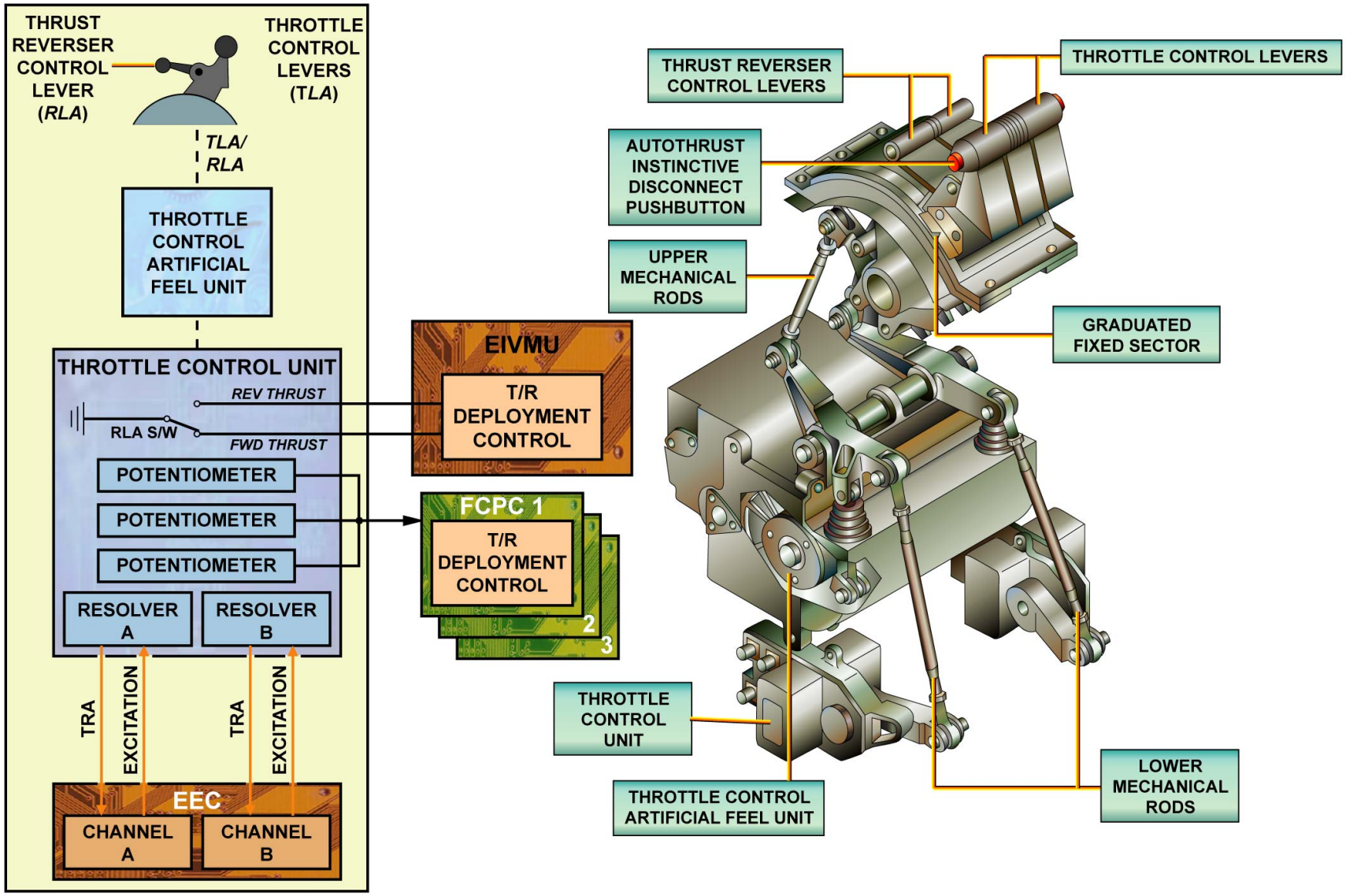

THROTTLE CONTROL LEVER ASSEMBLY - THROTTLE CONTROL LEVERS ... THROTTLE CONTROL UNIT

G7508471 - G3NT1T0 - FM70DG00000071

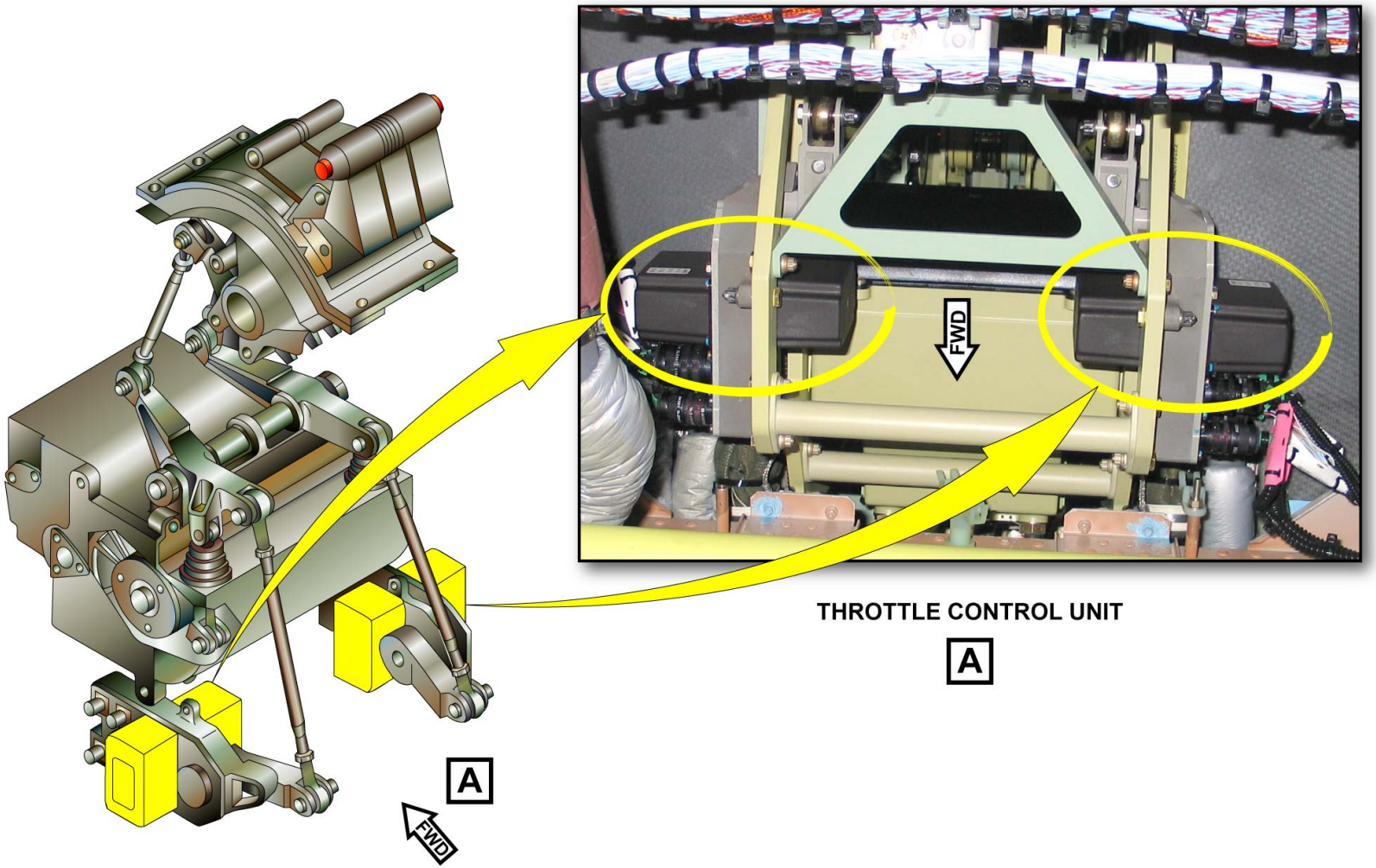

THROTTLE CONTROL LEVER ASSEMBLY - THROTTLE CONTROL LEVERS ... THROTTLE CONTROL UNIT

G7508471 - G3NT1T0 - FM70DG000000071

This Page Intentionally Left Blank

G7508471 - G3NT1T0 - FM70DG00000071

ENGINE MASTER CONTROL D/O (3)

GENERAL

The ENGine MASTER lever located on the center pedestal, interfaces with the fuel system and the FADEC system.
On the fuel system, the ENGine MASTER lever acts on the LP valve and the Pressure Raising and Shut-Off Valve (PRSOV). Note that the ENGine FIRE pushbutton also acts on the LP fuel valve.
On the FADEC system, the ENGine MASTER lever is used for selection of the starting mode and for reset of the Engine Electronic Controller (EEC) memory.

G7508471 - G3NT1T0 - FM70DH00000071

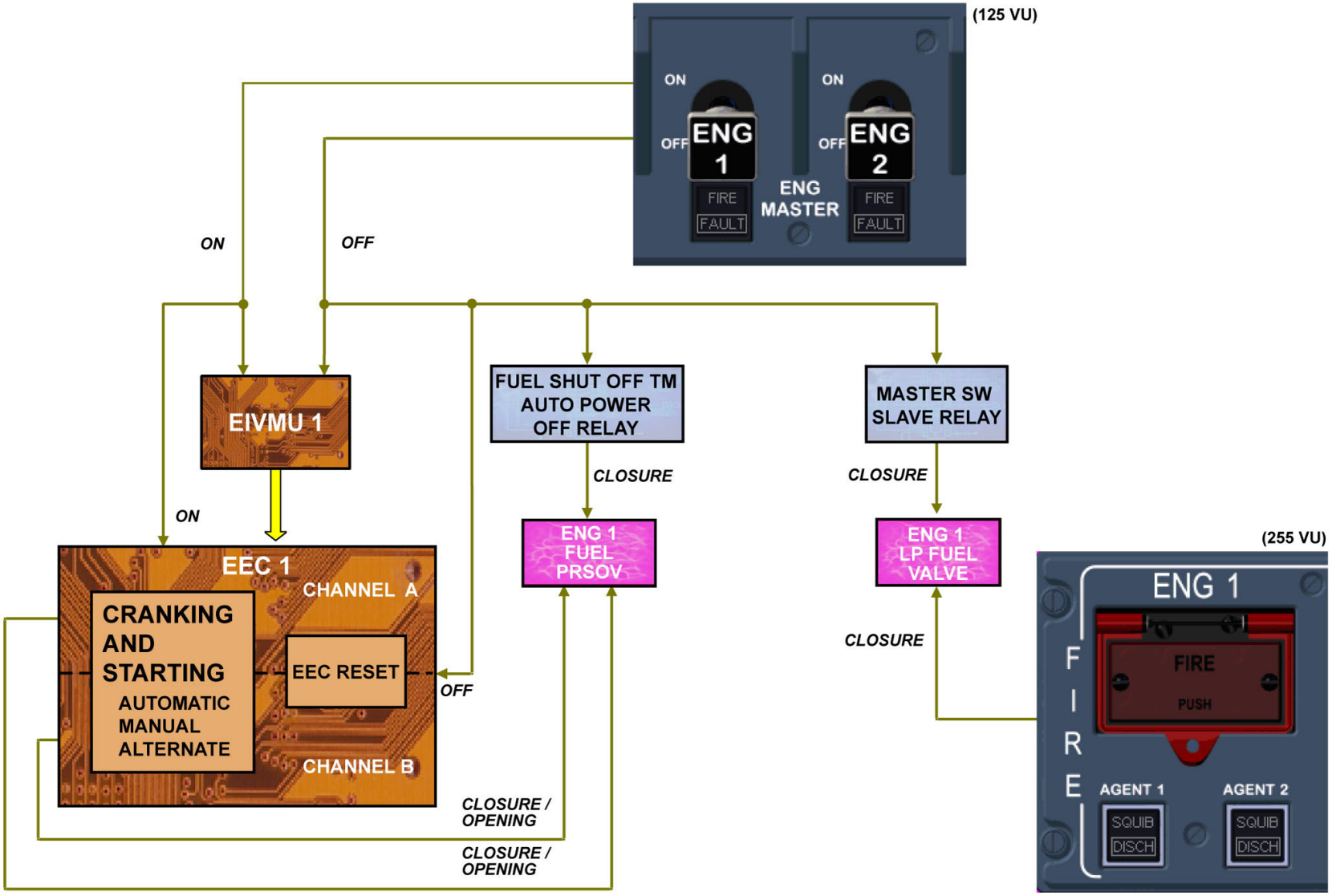

GENERAL

G7508471 - G3NT1T0 - FM70DH00000071

ENGINE MASTER CONTROL D/O (3)

FUEL LP VALVE AND PRSOV CONTROL

The ENGine MASTER lever simultaneously controls the LP fuel line and the High Pressure (HP) fuel line opening and closure.

LP VALVE AND SLAVE MASTER SWITCH RELAY

The ENGine MASTER lever controls the low pressure fuel supply from the aircraft wing through the engine master switch slave relay.
When the ENGine MASTER lever is moved to the "OFF" position, the engine master switch slave relay is energized. This supplies 28 VDC power to both LP valve actuator motors and causes the LP valve to close.
The MASTER switch slave relay takes its 28 VDC power supply from the PRSOV C/B.
One actuator motor of the LP valve is electrically supplied from the DC HOT BUS.
Pulling out the PRSOV C/B or switching off the aircraft power supply, leads to the automatic opening of the LP valve.
The LP valve fail-safe opening logic is mainly used for the engine dry motoring procedure. Pulling out the PRSOV C/B, while the ENGine MASTER lever is kept "OFF", makes the fuel feeding to the engine fuel pumps for their lubrication.
Selection of the ENGine FIRE pushbutton leads to LP valve closure, regardless of the ENGine MASTER lever position.

PRSOV AND AUTO POWER OFF RELAY

The ENGine MASTER lever is directly hardwired to the fuel shut off torque motor. It provides an independent authority to shut down the engine by cutting off the fuel supply, regardless of the EEC command.
When the ENGine MASTER switch is set to "OFF", an aircraft 28 VDC closes the auto power off time delay relay and supplies the fuel shut off torque motor, resulting in the PRSOV closure.
Two minutes later, the auto power off relay cuts off the power supply to the fuel shut off torque motor. The PRSOV is maintained in the closed position by spring load.
The PRSOV position indication signals are sent to both EEC channels by two microswitches.

ENGINE MASTER PANEL FAULT LIGHT

The amber "FAULT" light located on the ENGine MASTER panel comes on in case of:
- an aborted starting procedure during an autostart sequence,
- a PRSOV position disagree.

In case both PRSOV microswitches disagree with the MASTER lever position, the EEC sends a fault signal to the Engine Interface and Vibration Monitoring Unit (EIVMU) for "FAULT" light and corresponding ECAM message activation.

G7508471 - G3NT1T0 - FM70DH00000071

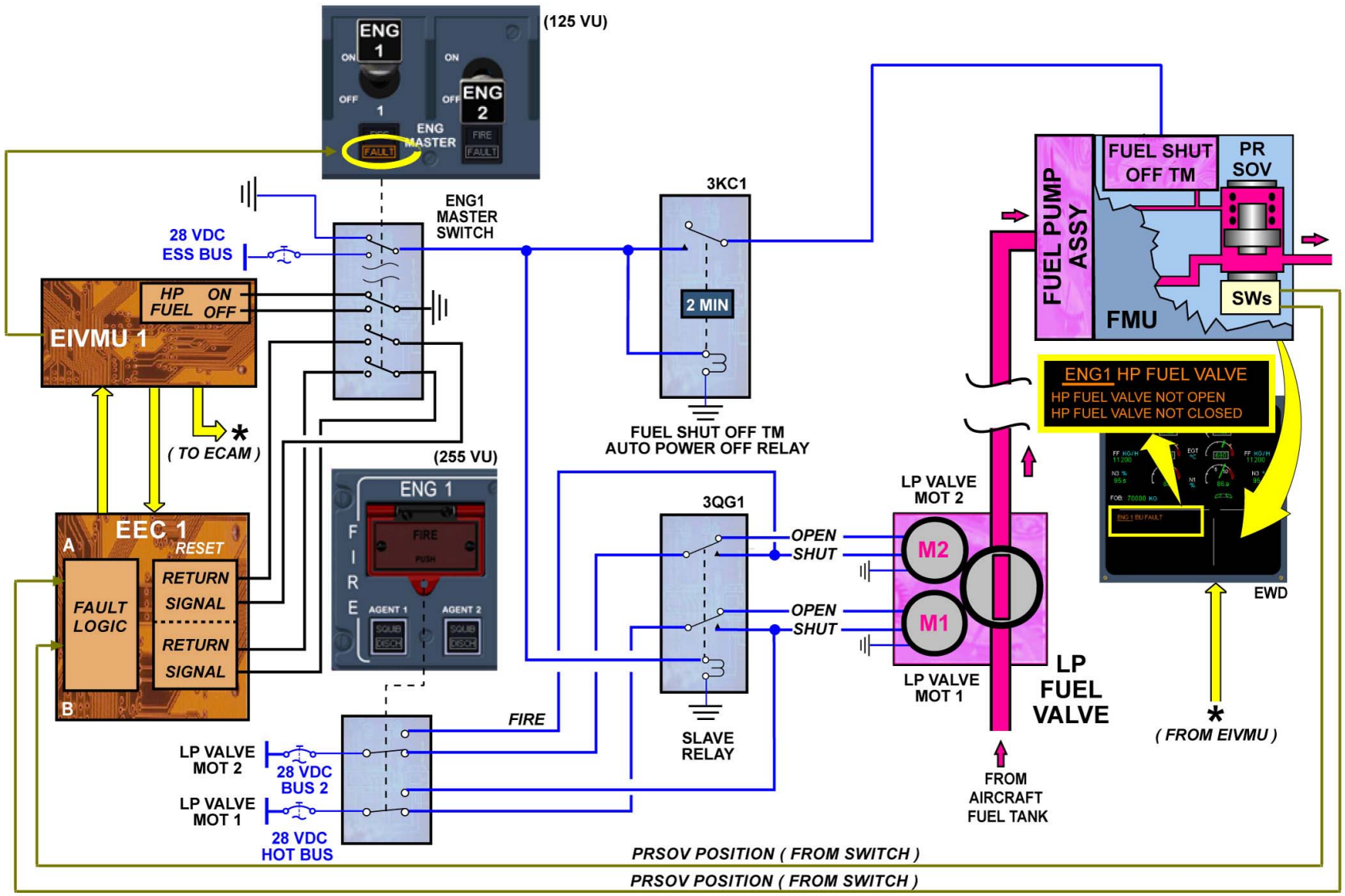

FUEL LP VALVE AND PRSOV CONTROL - LP VALVE AND SLAVE MASTER SWITCH RELAY ... ENGINE MASTER PANEL FAULT LIGHT

G7508471 - G3NT1T0 - FM70DH00000071

ENGINE MASTER CONTROL D/O (3)

MASTER LEVER STARTING AND RESET FUNCTION

The ENGine MASTER switch interfaces with the starting sequence and memory reset function of the EEC.

STARTING MODE OPERATION

During engine start, the ENGine MASTER switch command signal is sent to the EIVMU, which then transmits the information to the EEC in digital format.
In case of EIVMU failure or loss of the EIVMU output data, the EEC uses its reset hardwired discrete signals from the ENGine MASTER switch as command signal.

RESET FUNCTION

The ENGine MASTER switch is directly hardwired to the EEC to satisfy the reset function. Moving the ENGine MASTER lever from "ON" to "OFF" position closes both channel reset discrete contacts, thus resetting both EEC channels; all data stored in the EEC RAM memory will be cleared.

G7508471 - G3NT1T0 - FM70DH00000071

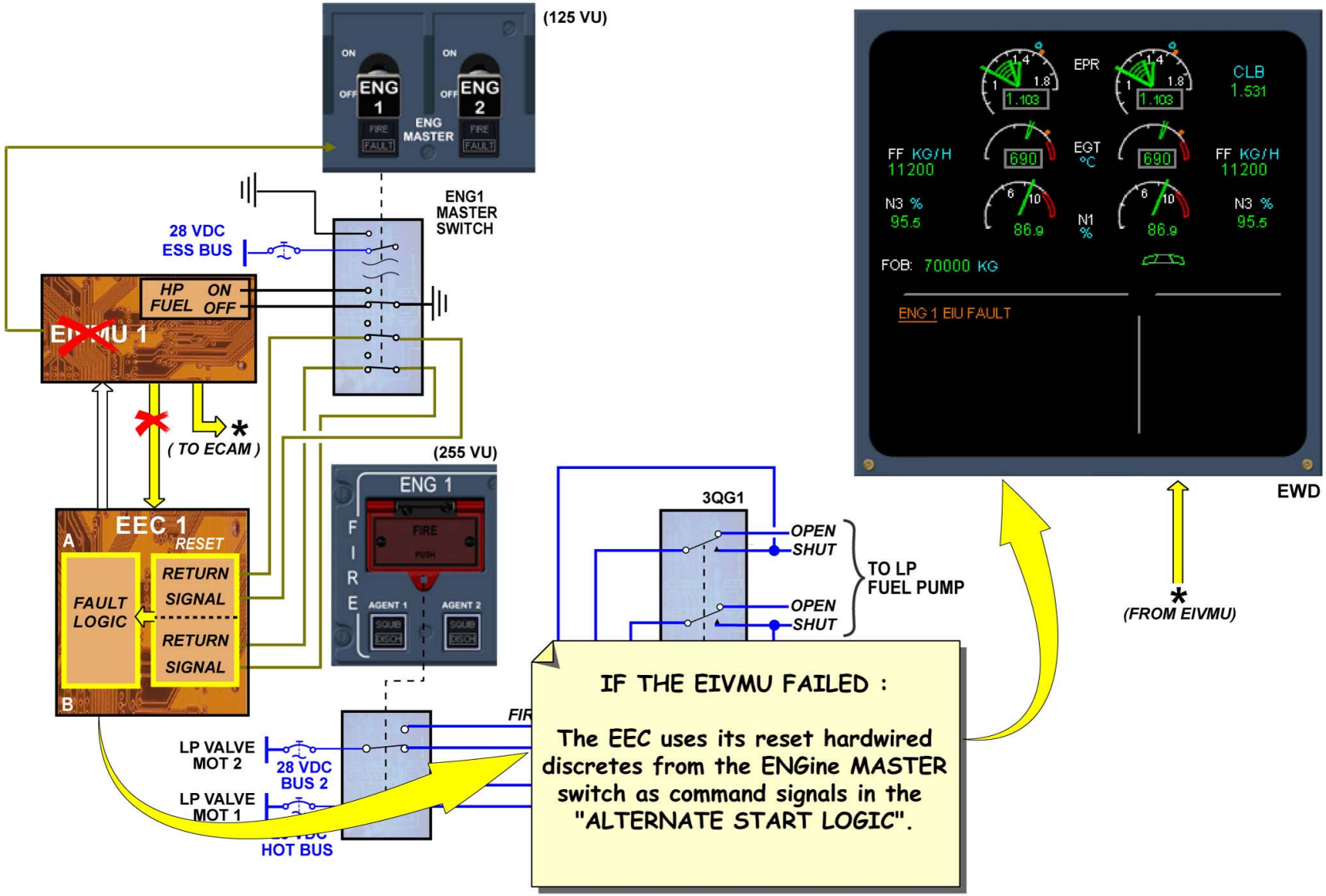

MASTER LEVER STARTING AND RESET FUNCTION - STARTING MODE OPERATION & RESET FUNCTION

G7508471 - G3NT1T0 - FM70DH000000071

VIBRATION MONITORING SYSTEM D/O (3)

GENERAL

The vibration monitoring system supplies continuous indications of the state of balance of the N1, N2 and N3 engine rotors.
This indication is available on the SD ENGINE page during all engine operating conditions.
The vibration monitoring system also helps the operators to do the maintenance operations such as fan trim balance and to monitor the engine vibration trend.

G7508471 - G3NT1T0 - FM70DD00000071

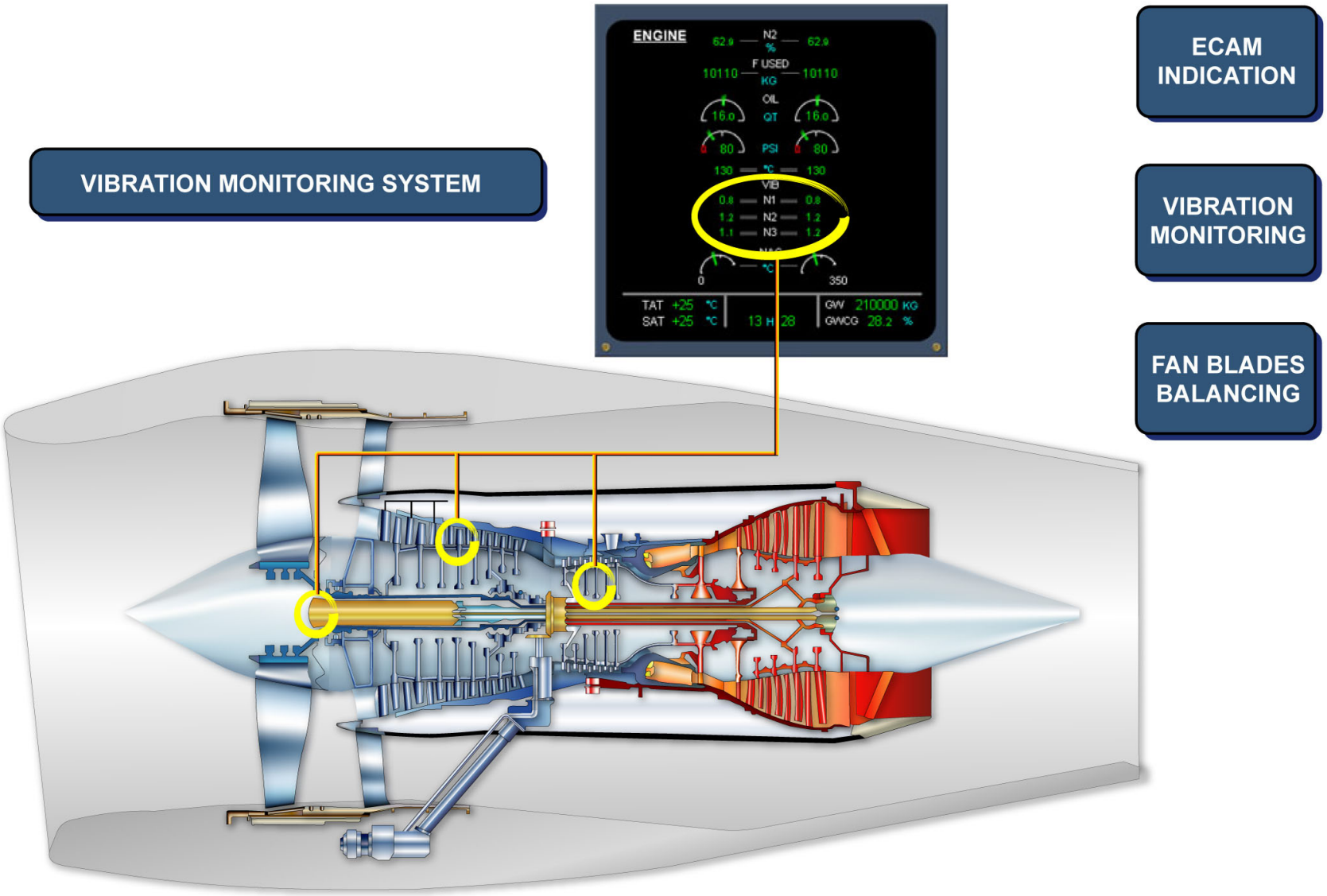
VIBRATION MONITORING SYSTEM
ECAM INDICATION
VIBRATION MONITORING
FAN BLADES BALANCING
ENGINE
N2
%
F USED
KG
OIL
QT
PSI
VIB
N1
N2
N3
TAT +25 °C
SAT +25 °C
GW 210000 KG
GWCG 28.2 %

GENERAL

VIBRATION MONITORING SYSTEM D/O (3)

VIBRATION MONITORING SYSTEM DESCRIPTION

The vibration monitoring system uses the N1, N2 and N3 speed indications processed by the Engine Electronic Controller (EEC) using signals from the engine N1, and N2 speed probes, and from the dedicated alternator (for N3 speed).
The vibration monitoring system comprises:
- the N1 trim balance probe,
- the dual vibration transducer, which is a dual output accelerometer,
- the vibration junction box,
- the Remote Charge Converter (RCC),
- the Engine Interface and Vibration Monitoring Unit (EIVMU).

ENGINE SHAFT SPEED AND TRIM BALANCE PROBE

N1 and N2 shaft speeds are measured using probes that interact with phonic wheels, which are installed in the front bearing housing.
The output from the N1 and N2 speed probes is sent to the EEC via the Overspeed Protection Unit (OPU). One of the phase windings in each three-phase circuit of the dedicated alternator supplies the EEC, via the Power Control Unit (PCU), with the N3 shaft speed.
The trim balance probe is installed in the engine front bearing housing. It sends a once-per-revolution signal for the LP compressor shaft to the EIVMU. The trim balance probe is identical to the N1 speed probes.

VIBRATION TRANSDUCER AND VIBRATION JUNCTION BOX

The vibration transducer is a dual output accelerometer installed on the RH side of the engine intermediate case. It contains two piezo-electric crystal stack elements, with a mechanical load of an electrically insulated seismic mass. Each element is connected to an electrical lead. Both leads are connected to the vibration junction box.

The vibration junction box is attached to the right engine intermediate case and is divided into two parts. Each part contains the terminals where a transducer lead and cables which go to the RCC, are connected.

REMOTE CHARGE CONVERTER (RCC)

The RCC is an electronic unit installed on the LH side of the fan case. It receives the signals from the vibration transducer via the vibration junction box.
These signals are filtered, amplified and modulated into voltage signals, to be sent to the EIVMU.

ENGINE INTERFACE AND VIBRATION MONITORING UNIT (EIVMU)

The EIVMU is installed in the aircraft avionics compartment. The EIVMU uses these data for the N1, N2, and N3 rotor vibration level determination and broadband calculation as Inch Per Second (IPS) data.
The N1, N2, and N3 rotor vibration levels are displayed on the ENGINE system page and are also available for maintenance purposes through the MCDU via the Central Maintenance Computer (CMC).

VIBRATION MONITORING SYSTEM OPERATION

To indicate engine vibration levels in the cockpit or to let operators do a fan trim balance, the EIVMU uses information from the RCC, the EEC, and from the trim balance probe.

REMOTE CHARGE CONVERTER (RCC)

The engine vibrations cause the seismic mass in the transducer to apply pressure on the piezo-electric crystal stack elements.
This causes the elements to generate electrical signals proportional to the engine vibration. The signals are then sent to the RCC which amplifies them to give output signals to the EIVMU.

ENGINE ELECTRONIC CONTROLLER (EEC)

The engine speed signals N1, N2 and N3 are sent to the EIVMU through an ARINC data bus connection, and are used for vibration retrieval and display on the MCDU through the EIVMU menu.

TRIM BALANCE PROBE

Once-per-revolution analog signal is sent by the trim balance probe to the EIVMU. It is used for determination of the N1 unbalance phase angle. This phase angle is accessible through the EIVMU menu and is used, with the vibration amplitude, for the fan trim balance procedure.

VIBRATION INDICATING AND MAINTENANCE DATA

The EIVMU maintains the interface between the engine systems and the aircraft, and sends ARINC data to the cockpit.

VIBRATION INDICATING

The vibration indication is displayed on the ECAM ENGINE and CRUISE pages. The vibration data from the EIVMU in IPS are converted in "cockpit UNITS" in a range from 0 to 10.
An ECAM advisory informs the flight crew when N1, N2 or N3 vibration level exceeds a specific value. In such a case, the vibration over limit value pulses in green.

VIBRATION MAINTENANCE DATA

The Aircraft Maintenance Manual (AMM) 71-00-00 chapter (adjustment / test) contains the information required to do the LP compressor trim balance test (test number 16) with the engine on wing, and the engine vibration survey test (test number 11).
The LP compressor trim balance test, is done through the MCDU menus to identify where the trim balance bolts have to be installed on the LP compressor make-up piece to recover nominal balance.
The engine vibration survey test (test number 11) is done to schedule the engine module replacement as a preventive maintenance operation.

G7508471 - G3NT1T0 - FM70DD00000071

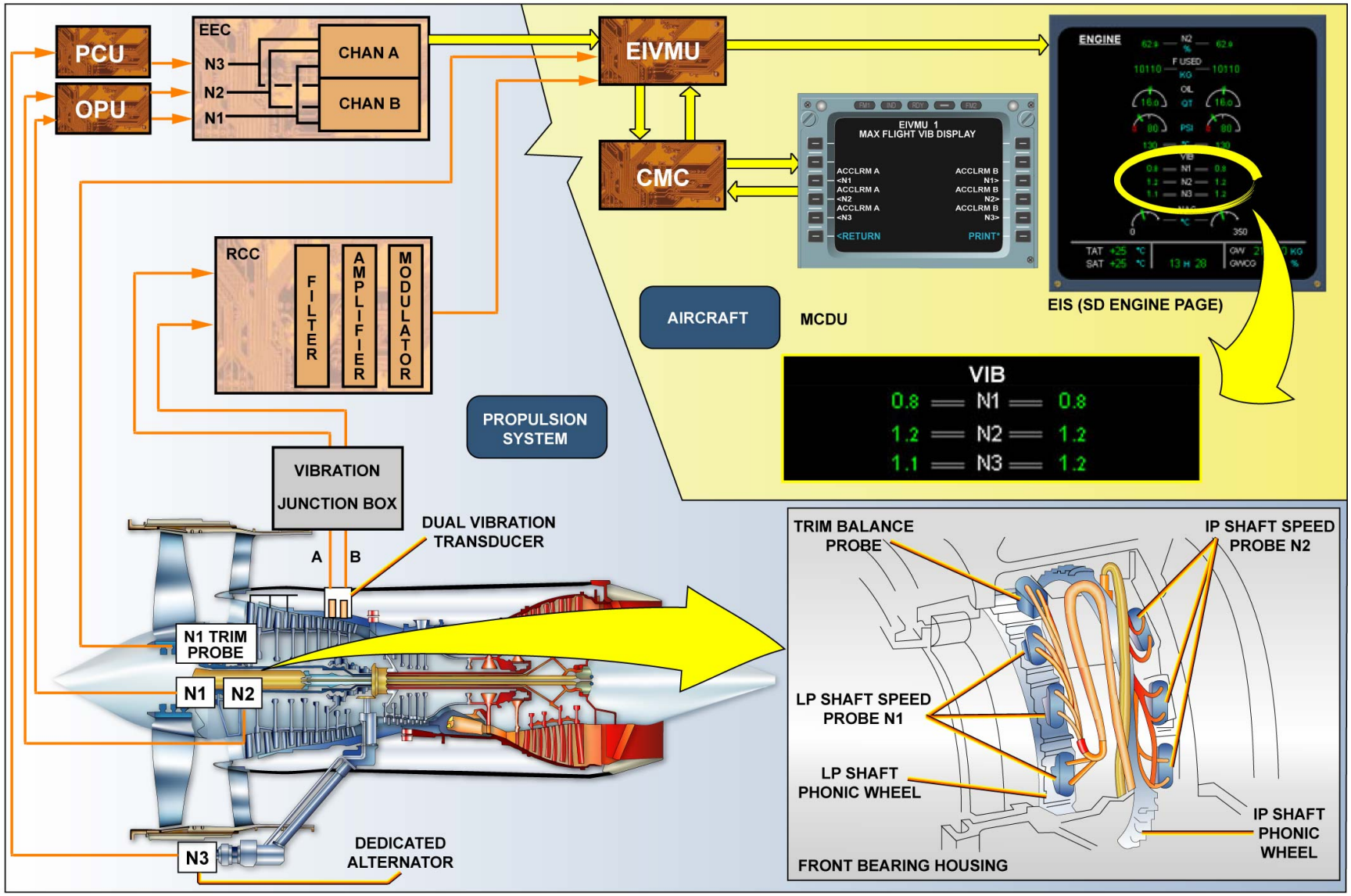

VIBRATION MONITORING SYSTEM DESCRIPTION ... VIBRATION INDICATING AND MAINTENANCE DATA

G7508471 - G3NT1T0 - FM70DD00000071

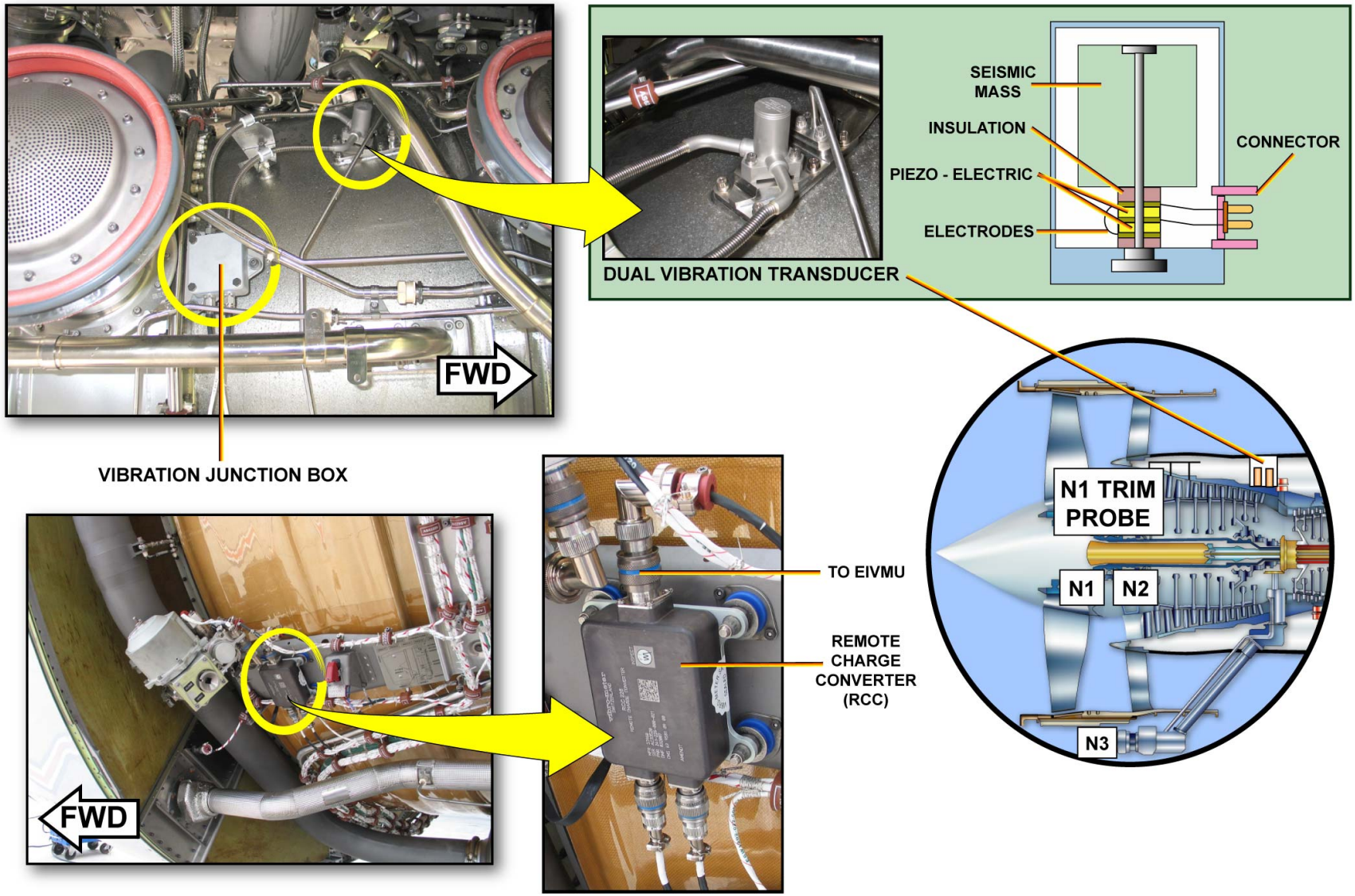

VIBRATION MONITORING SYSTEM DESCRIPTION ... VIBRATION INDICATING AND MAINTENANCE DATA

THRUST REVERSER SYSTEM D/O (3)

GENERAL

The thrust reverser system helps the wheel brakes by supplying additional deceleration forces to the aircraft.
The thrust reversers are used only on the ground to reduce aircraft roll distance for landing or in case of aborted take-off. The thrust reversers are incorporated into the left and right C-ducts. Each C-duct has 2 pivoting doors, each one operated by a hydraulic actuator.
When the pivoting doors are deployed, they stop the fan airflow to the Common Nozzle Assembly (CNA) and redirect it forward.
Thrust reverse is selected from the throttle control levers and is controlled and monitored by the Engine Electronic Controller (EEC). The pivoting door actuators are operated by the Isolation Control Unit (ICU) and the Direction Control Unit (DCU). The ICU and DCU of each engine are supplied by the engine-driven pump of that engine.

G7508471 - G3NT1T0 - FM70D600000071

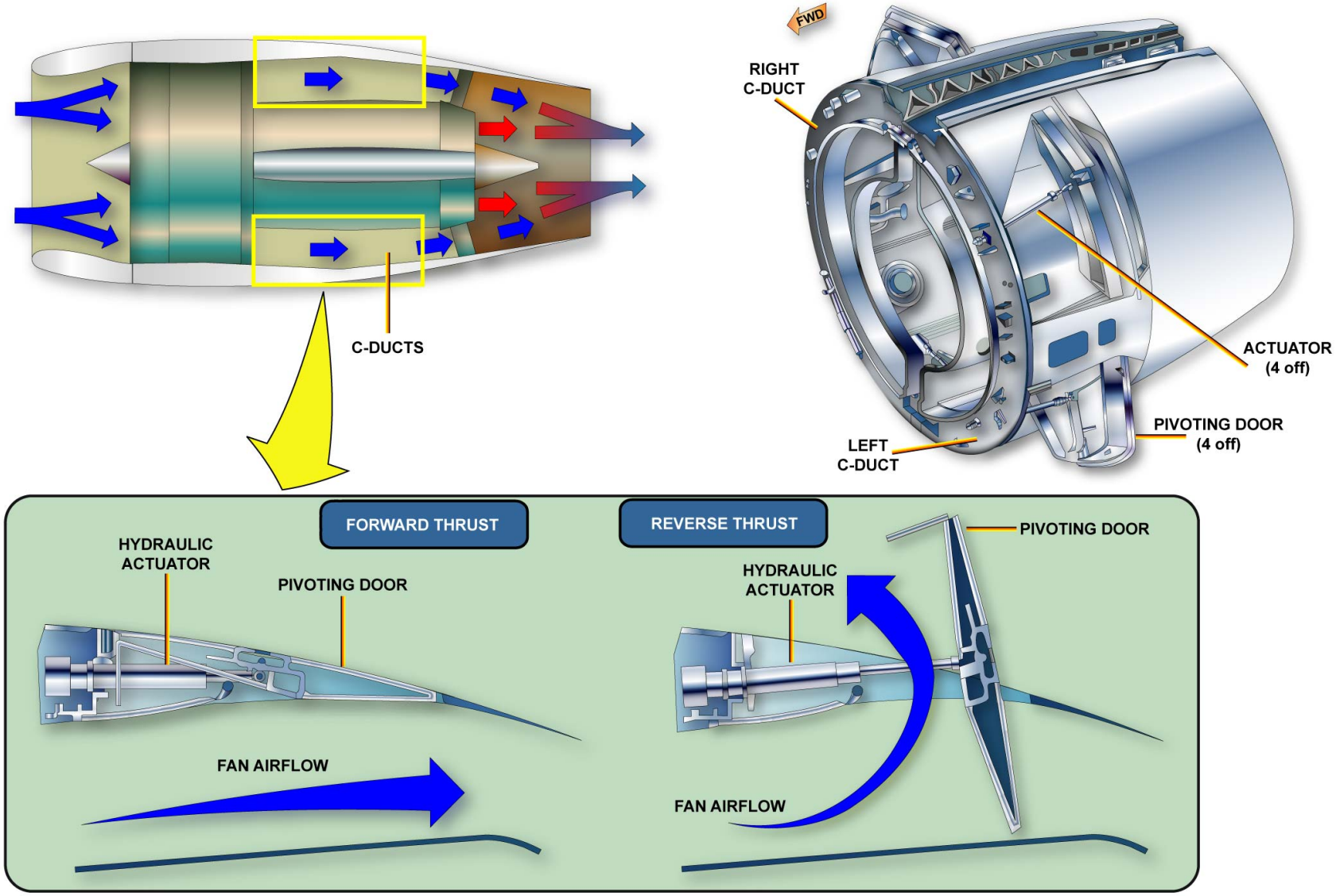
C-DUCTS
FWD
RIGHT
C-DUCT
ACTUATOR
(4 off)
PIVOTING DOOR
(4 off)
LEFT
C-DUCT
FORWARD THRUST
HYDRAULIC
ACTUATOR
PIVOTING DOOR
FAN AIRFLOW
REVERSE THRUST
PIVOTING DOOR
HYDRAULIC
ACTUATOR
FAN AIRFLOW

GENERAL

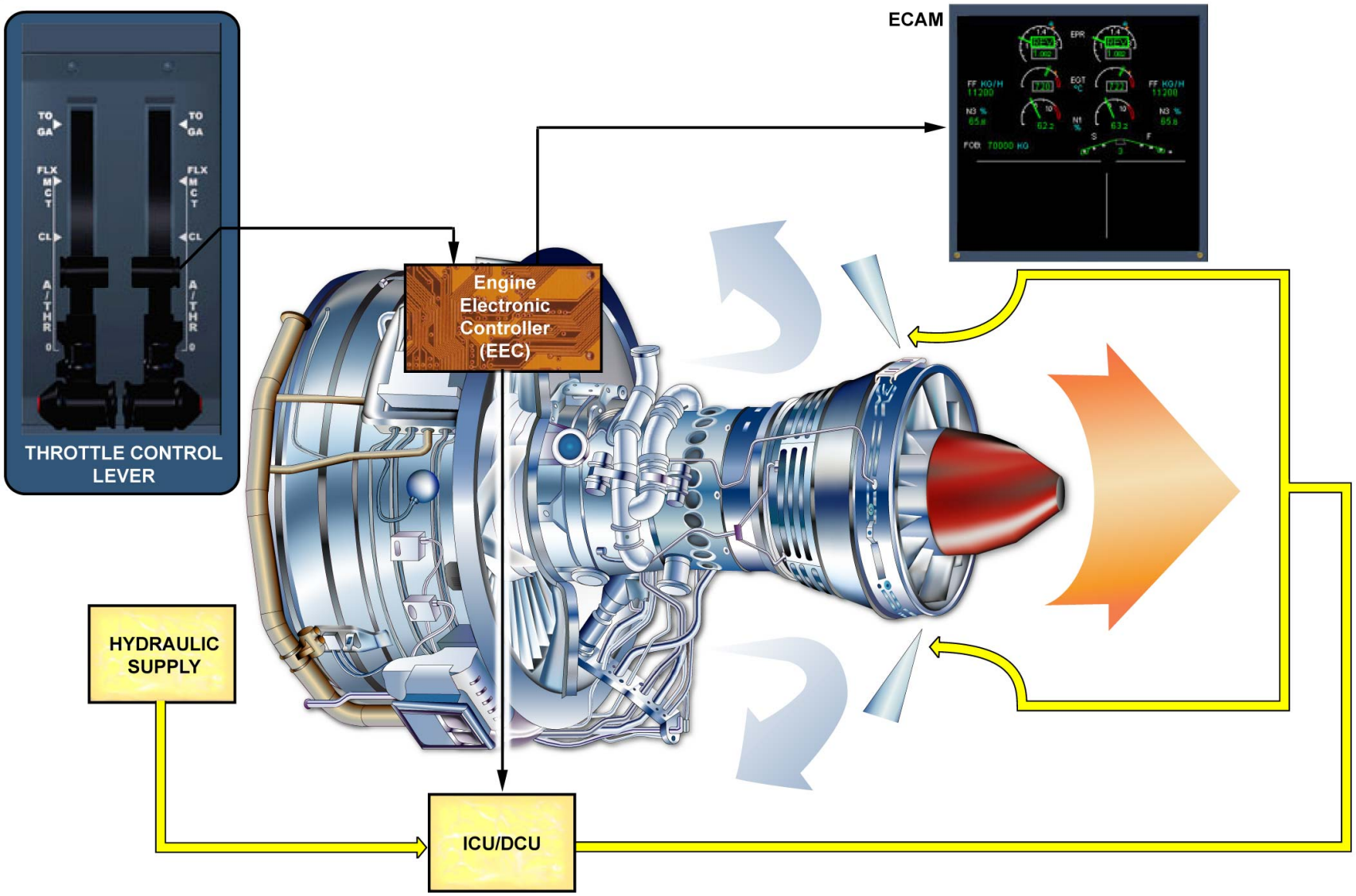

GENERAL

G7508471 - G3NT1T0 - FM70D600000071

This Page Intentionally Left Blank

G7508471 - G3NT1T0 - FM70D600000071

THRUST REVERSER SYSTEM D/O (3)

THRUST REVERSER CONTROL - GENERAL

The thrust reverser is primarily controlled by the EEC. In addition to the EEC, there is a second and third layer of protection built in to prevent inadvertent or accidental thrust reverser deployment.

EEC CONTROL

The EEC receives a DEPLOY signal from resolvers in the Thrust Control Unit (TCU) when the throttle control levers are selected to the thrust reverse position. As long as the engine is running, the EEC validates the DEPLOY command and sends a command signal to open the isolation control valve, pressurizing the system. Hydraulic pressure is then directed to the stow side of the door actuators.

EIVMU CONTROL

The DEPLOY command is also controlled by the Engine Interface and Vibration Monitoring Unit (EIVMU). The EIVMU receives the "aircraft on ground" signal from the Landing Gear Control and Interface Unit (LGCIU) and a "thrust reverse selected" signal from a dedicated switch in the TCU. The EIVMU then energizes the Permission Switch, which controls the power supply to the thrust reverser direction control unit. The ground for the relay is controlled by the EEC when the DEPLOY command is validated. Hydraulic pressure is then directed to the hydraulic latches to unlock the reversers and then to the deploy side of the actuators to open the thrust reverser pivoting doors after unlocking the internal (secondary) actuator locks.

FCPC CONTROL

Regulations also require another layer of protection, sometimes referred to as the "third line of defense". This additional protection system must be independently-controlled. In other words, it must use signals different from the EEC/EIVMU control. On the A330, this additional protection is provided by the Tertiary Locking System (TLS). The tertiary locks mechanically lock each pivoting door in the stowed position. The locks are released electrically to deploy the reverser. The TLS is independently controlled by the Flight Control Primary Computers (FCPC 1, 2, 3).
The FCPC command the tertiary locks to unlock when the following conditions are satisfied:
- "thrust reverse selected" signals from dedicated potentiometers in the TCU
- 2 of the 3 other engine throttle control levers in IDLE position
- "aircraft on ground" - Radio Altimeter (RA) signal < 6 ft.

G7508471 - G3NT1T0 - FM70D600000071

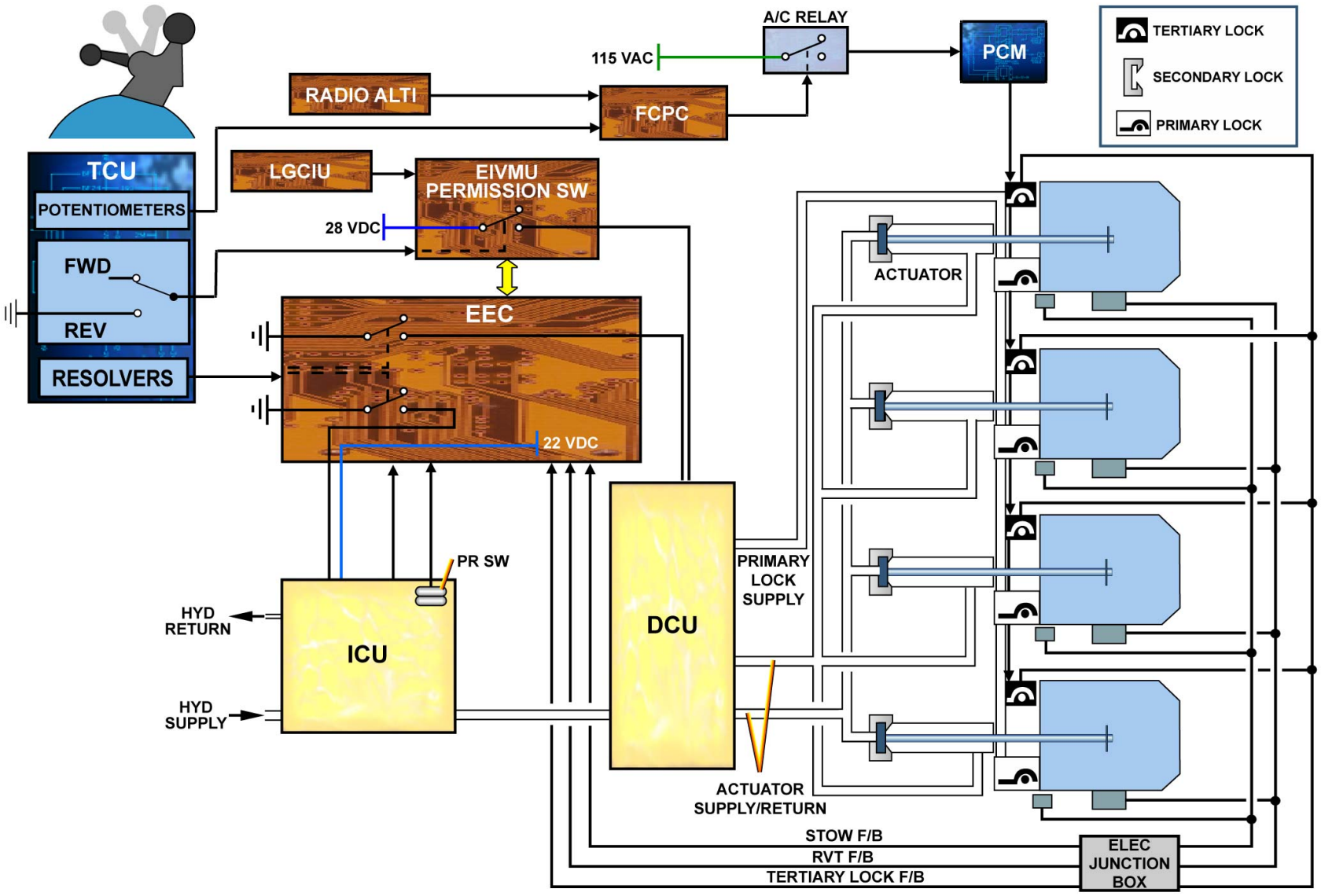

THRUST REVERSER CONTROL - GENERAL - EEC CONTROL ... FCPC CONTROL

G7508471 - G3NT1T0 - FM70D600000071

THRUST REVERSER SYSTEM D/O (3)

THRUST REVERSER SYSTEM DESCRIPTION

The thrust reverser system on each engine includes:
- four pivoting doors,
- an ICU and DCU,
- one actuator for each pivoting door,
- one primary lock for each pivoting door,
- one tertiary lock for each pivoting door,
- one Power Conditioning Module (PCM),
- one stow switch for each pivoting door,
- one Rotational Variable Transducer (RVT) for each pivoting door,
- one electrical junction box,
- a ground safety switch.

G7508471 - G3NT1T0 - FM70D600000071

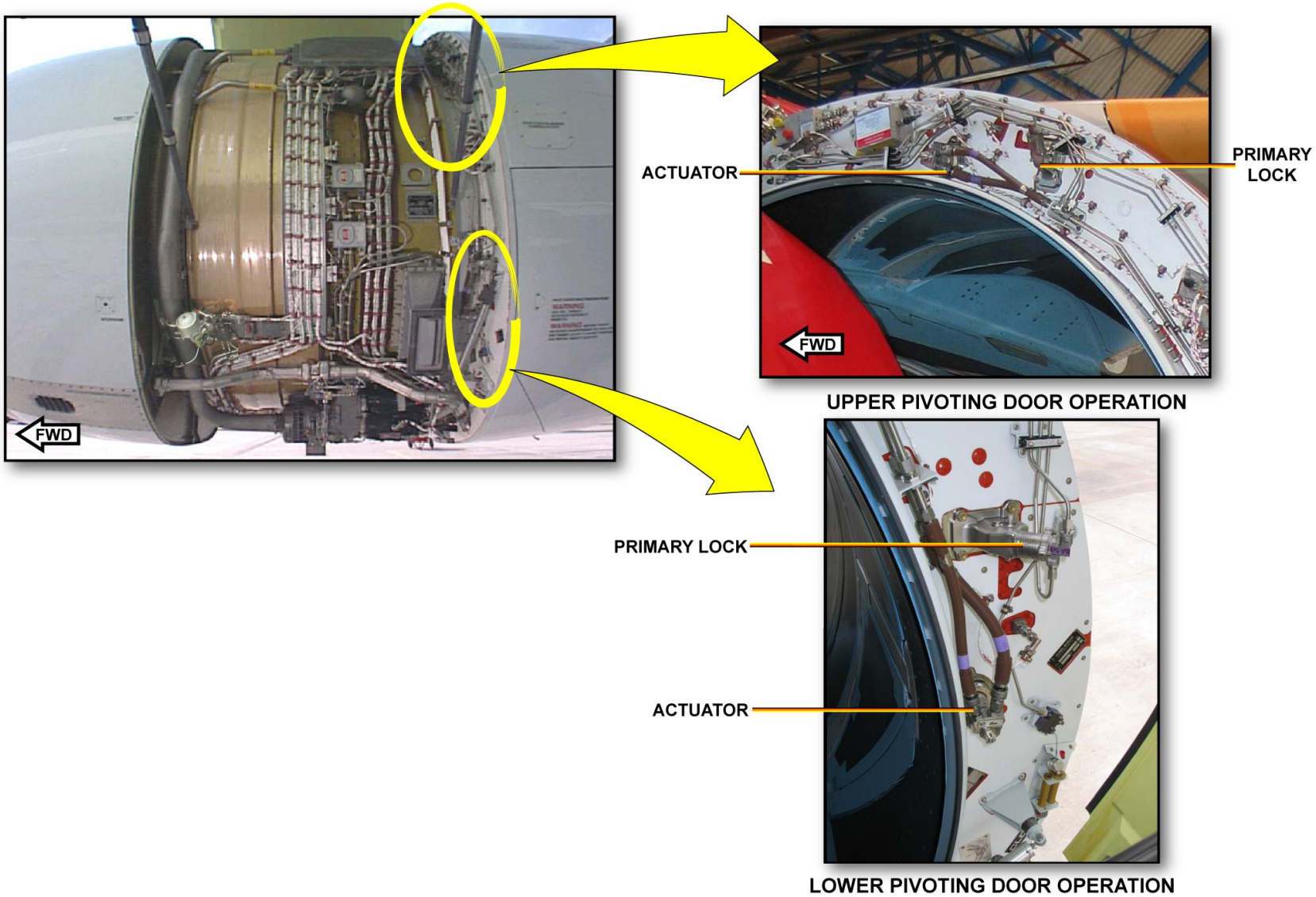

THRUST REVERSER SYSTEM DESCRIPTION

THRUST REVERSER SYSTEM D/O (3)

THRUST REVERSER HYDRAULIC SYSTEM DESCRIPTION & OPERATION

The thrust reverser is hydraulically supplied by the blue hydraulic system for engine 1, and yellow hydraulic system for engine 2. The thrust reverser hydraulic components control hydraulic fluid flow to the primary locks and pivoting door actuators. Control and feedback signals are exchanged with the engine EEC. The thrust reverser hydraulic components are:
- the ICU with built-in Pressure switch,
- the DCU.

ISOLATION CONTROL UNIT (ICU)

The ICU controls the supply of the hydraulic pressure to the thrust reversr system. When the solenoid is energized by the EEC, the isolation valve opens and supplies pressure through the DCU to the STOW side of the pivoting door actuators. The ICU isolation valve can also be locked with the MANUAL INHIBIT lever to prevent accidental operation of the thrust reverser during maintenance work. The ICU also includes a pressure switch which is pressurized when the isolation valve is open. This actuation of the pressure switch sends a signal to the EEC indicating that the isolation valve is open and that supply pressure is applied to the reverser system.

DIRECTION CONTROL UNIT (DCU)

The DCU solenoid is energized to deploy the thrust reverser. When the solenoid is energized, the DCU supplies hydraulic pressure to the pivoting door primary locks. The locks open in sequence and after the last primary lock is released, return pressure to the DCU moves the direction control valve to the deploy position. The direction control valve controls the pressure to the deploy side of the pivoting door actuators.

G7508471 - G3NT1T0 - FM70D600000071

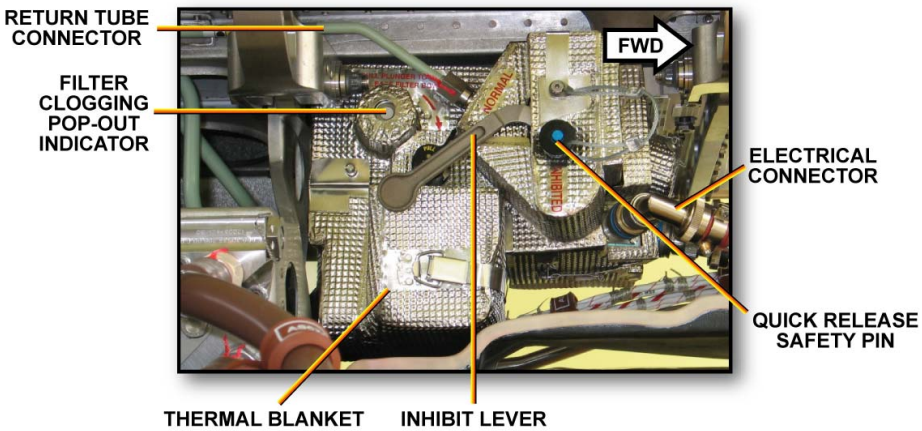

ISOLATION CONTROL UNIT

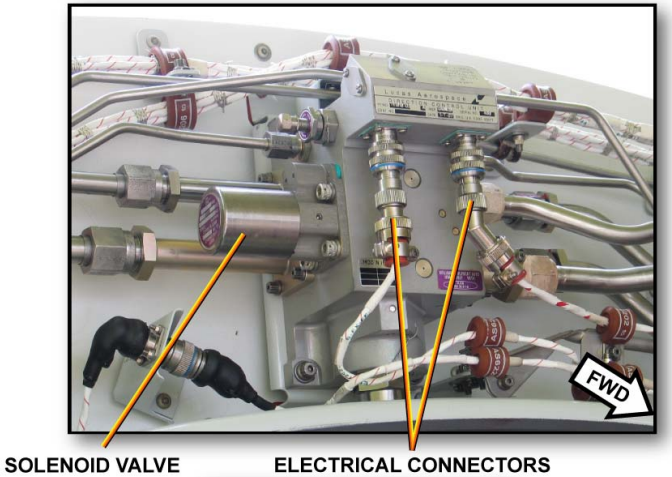

DIRECTION CONTROL UNIT

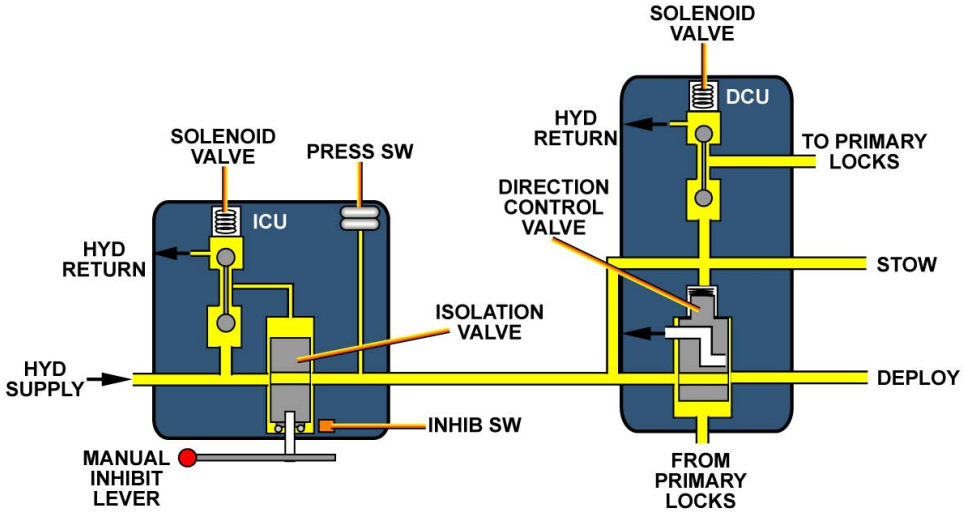

THRUST REVERSER HYDRAULIC SYSTEM DESCRIPTION & OPERATION - ISOLATION CONTROL UNIT (ICU) & DIRECTION CONTROL UNIT (DCU)

THRUST REVERSER SYSTEM D/O (3)

TLS DESCRIPTION AND OPERATION

TLS is an independent electrical locking system that is part of the three lines of defense against inadvertent thrust reverser deployment. There is one tertiary lock for each of the four pivoting doors.
Each tertiary lock is composed of:
- a solenoid assembly
- a mechanical lock assembly

The tertiary lock solenoid is electrically supplied with 115 VAC by PCM to unlock. The power to the PCM is controlled by the FCPC. When the solenoid is energized, the associated shoot bolt moves out of its housing in the hook and the spring actuator assembly moves the hook to the unlock position. Each tertiary lock incorporates a position switch, which provides the lock position signal to the EEC for monitoring purposes.

G7508471 - G3NT1T0 - FM70D600000071

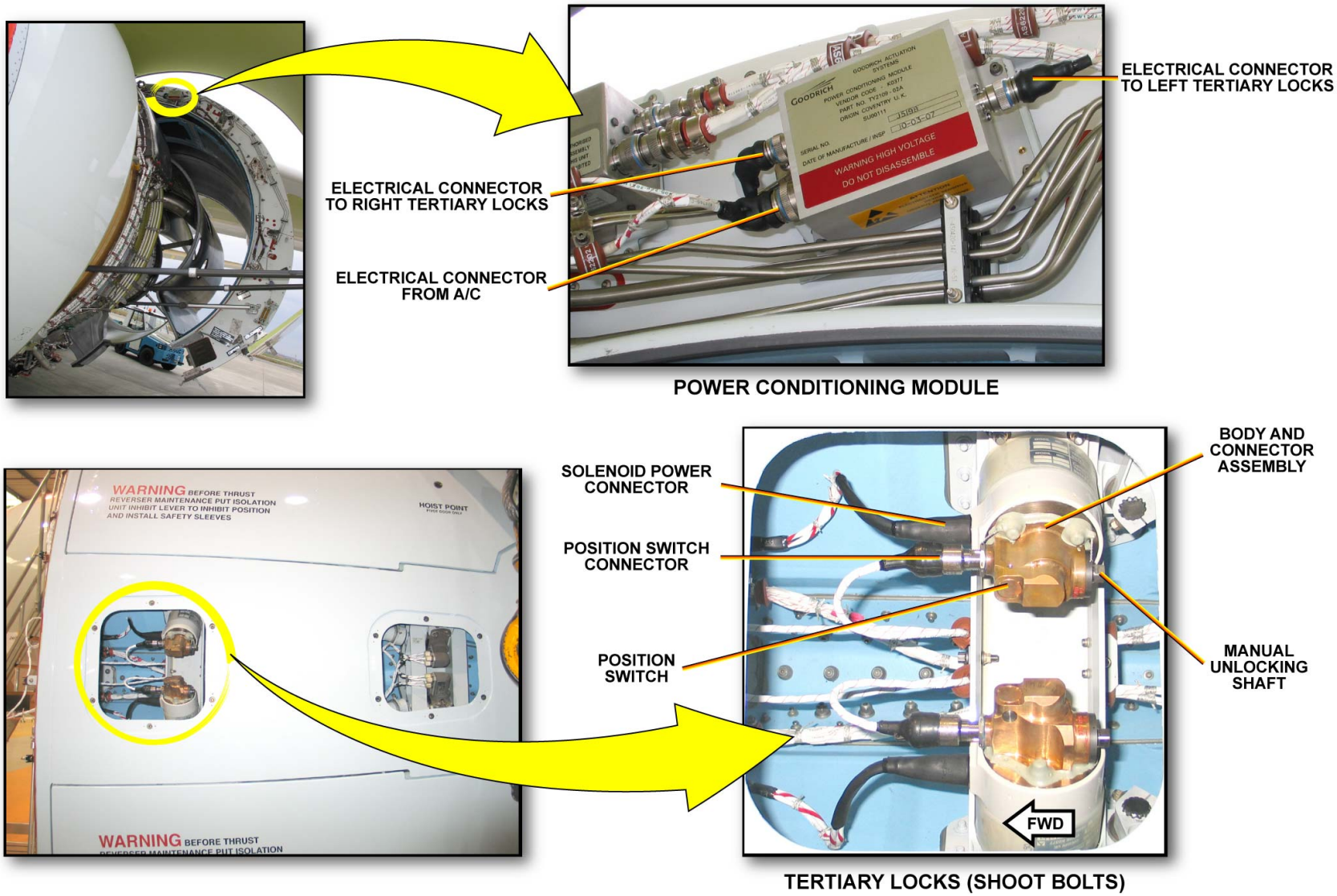

TLS DESCRIPTION AND OPERATION

THRUST REVERSER SYSTEM D/O (3)

OTHER COMPONENTS DESCRIPTION

Each pivoting door is actuated by a hydraulic actuator supplied from the DCU. There is an internal locking mechanism in each actuator, which is the secondary lock for the pivoting door.
For each pivoting door a primary lock is installed on the front frame. The primary locks are locked mechanically when the pivoting door is stowed, and unlocked hydraulically to open.
There is a stow switch and a Rotational Variable Transducer (RVT) for each pivoting door to indicate the door position to the EEC. The stow switches and RVTs send position signals to the EEC through the electrical junction box.
Four inhibition bolts are available to lock the pivoting doors in the stowed position in case of thrust reverser deactivation.
A ground safety switch is installed on the LH fan case and is accessible through an access door in the cowl. The ground safety switch is connected to the EEC and it is installed on the engine so that the maintenance technician can safely operate the thrust reverser during the operational test from the MCDU.

G7508471 - G3NT1T0 - FM70D600000071

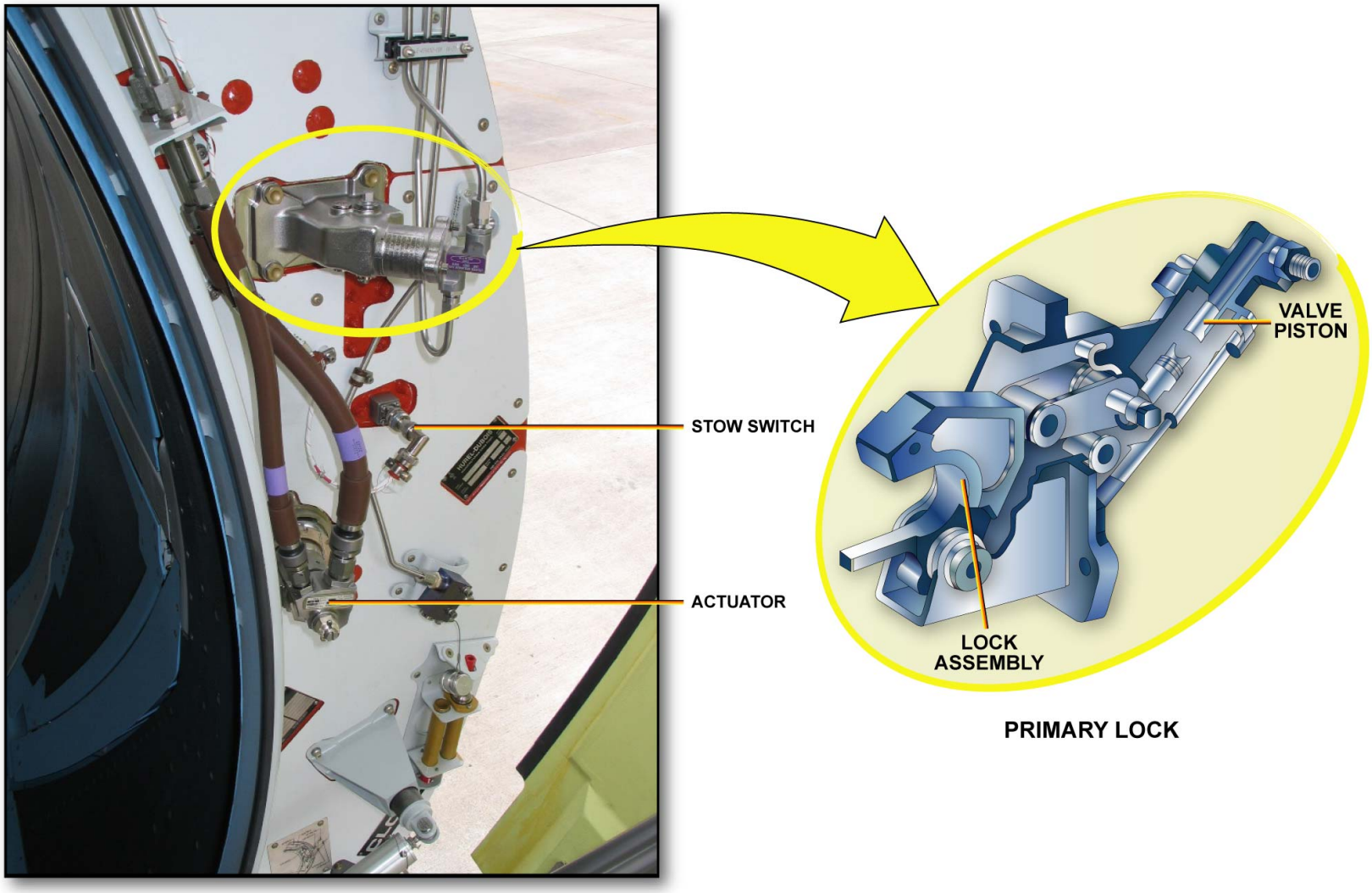

OTHER COMPONENTS DESCRIPTION

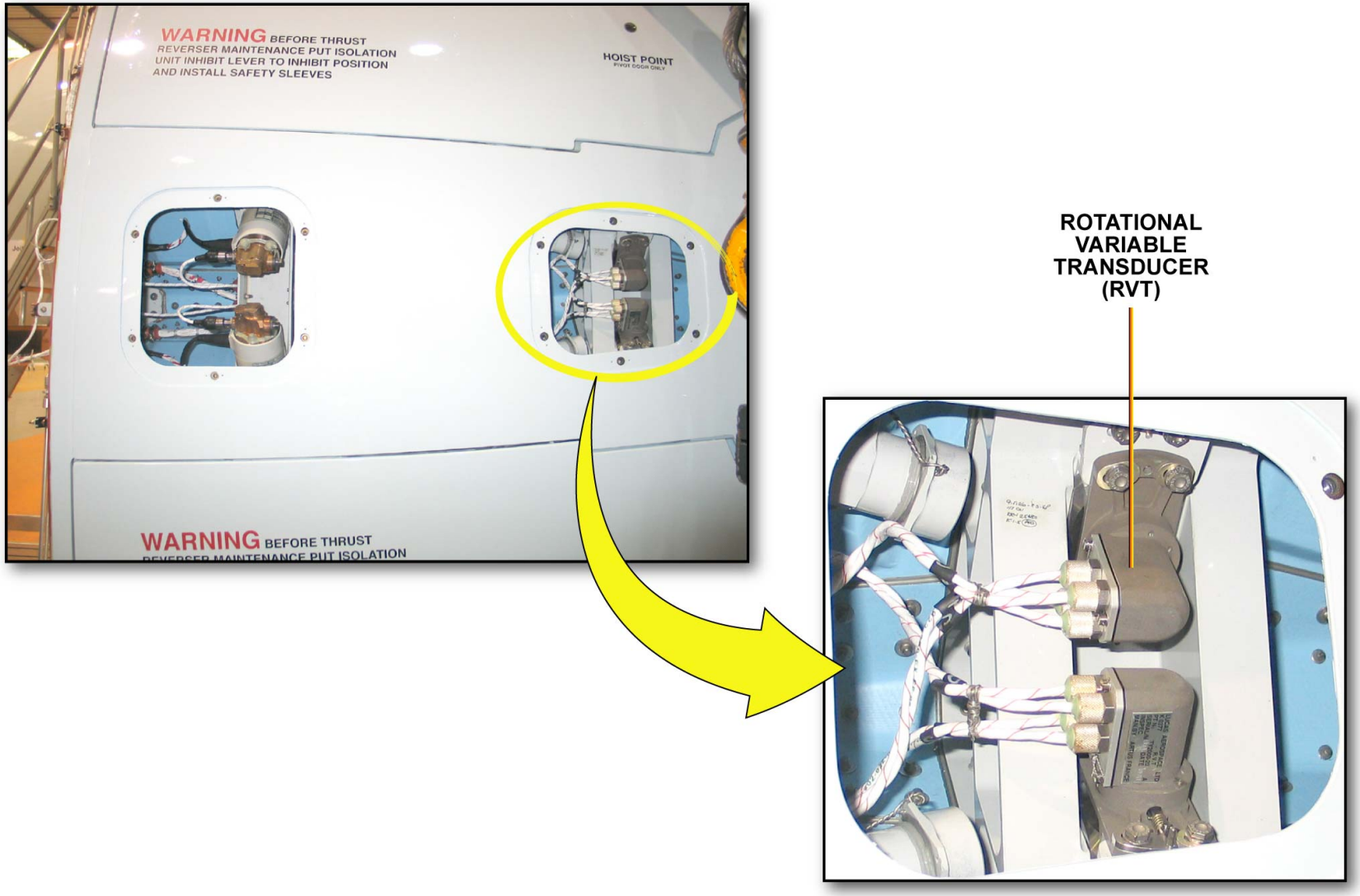

OTHER COMPONENTS DESCRIPTION

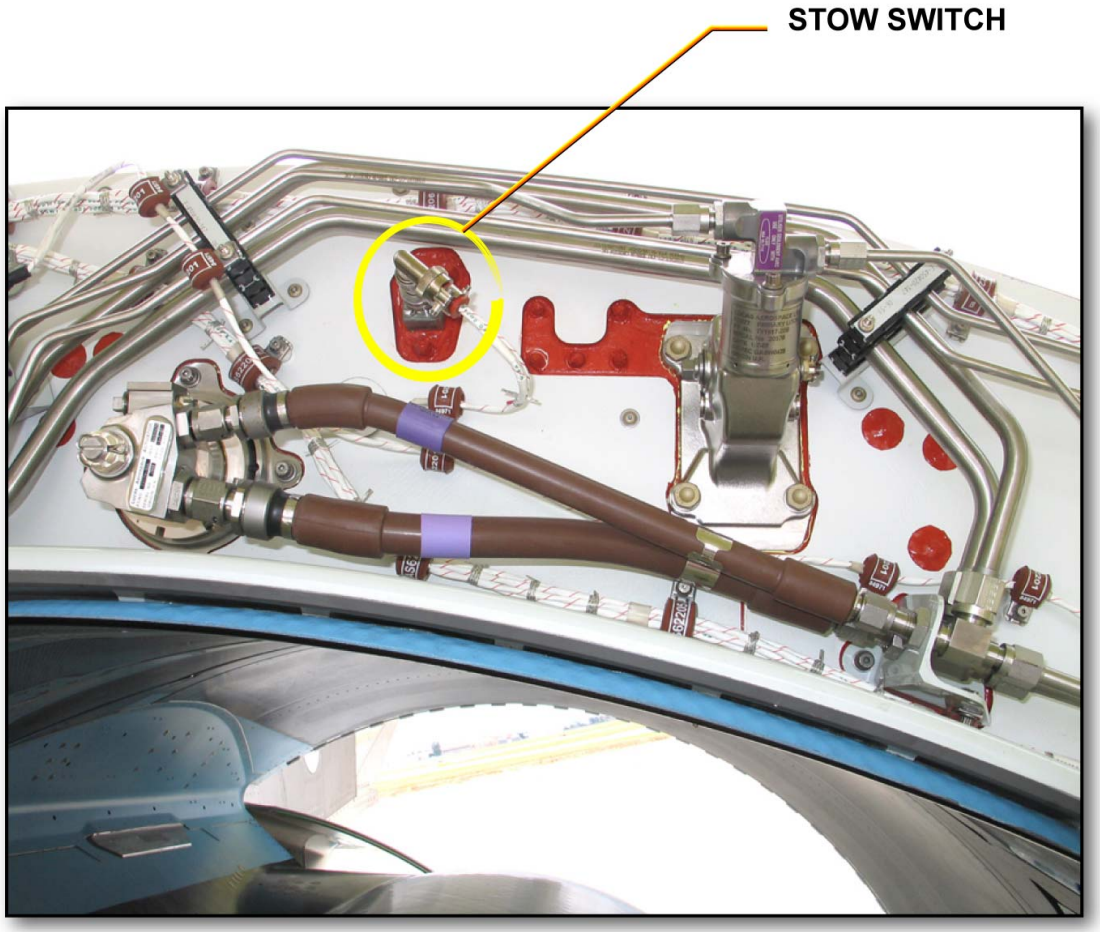

OTHER COMPONENTS DESCRIPTION

G7508471 - G3NT1T0 - FM70D600000071

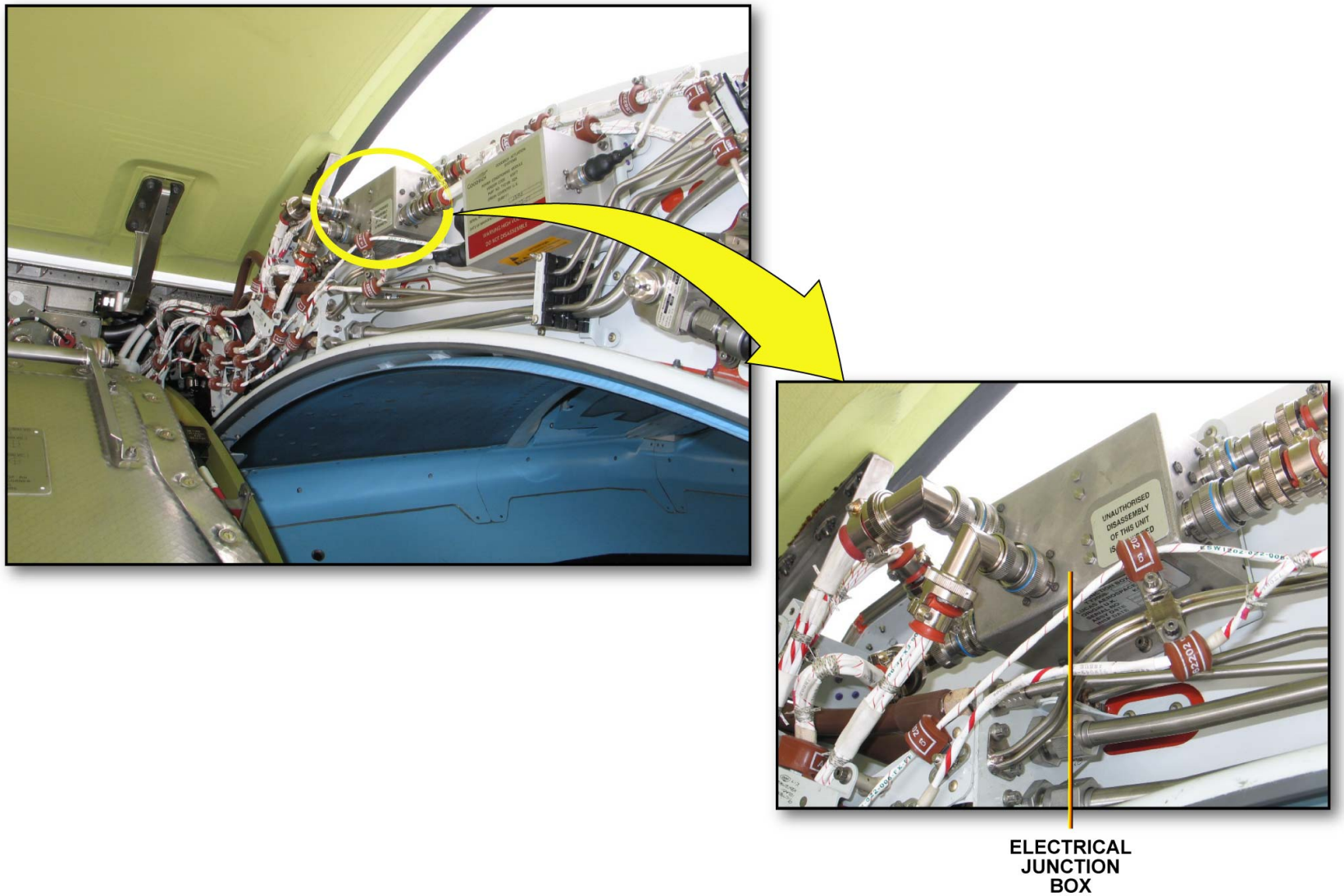

OTHER COMPONENTS DESCRIPTION

G7508471 - G3NT1T0 - FM70D600000071

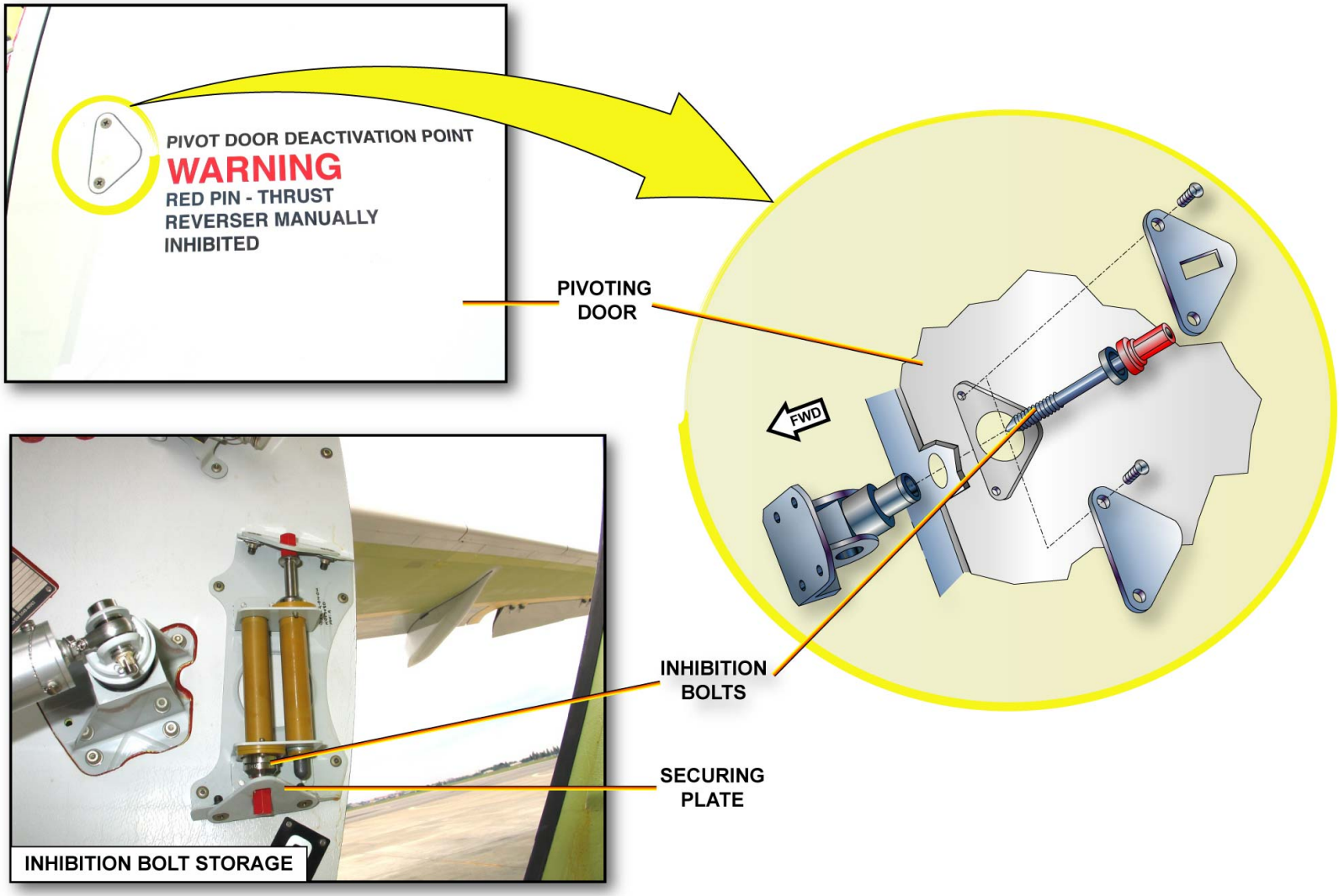

OTHER COMPONENTS DESCRIPTION

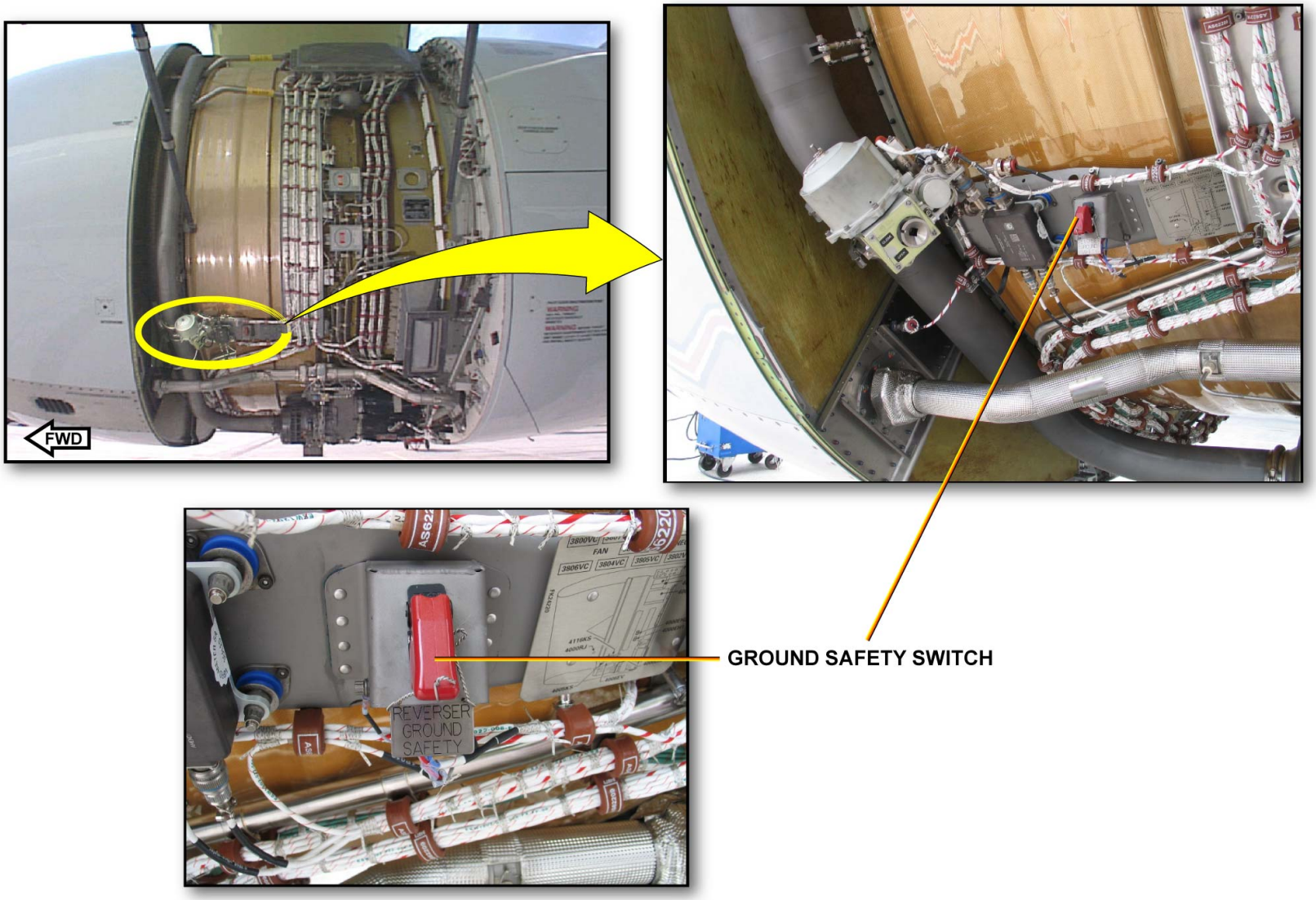

OTHER COMPONENTS DESCRIPTION

This Page Intentionally Left Blank

G7508471 - G3NT1T0 - FM70D600000071

THRUST REVERSER SYSTEM D/O (3)

THRUST REVERSER OPERATION (DEPLOY SEQUENCE)

The thrust reverser system is only operational when the aircraft is on the ground.

G7508471 - G3NT1T0 - FM70D600000071

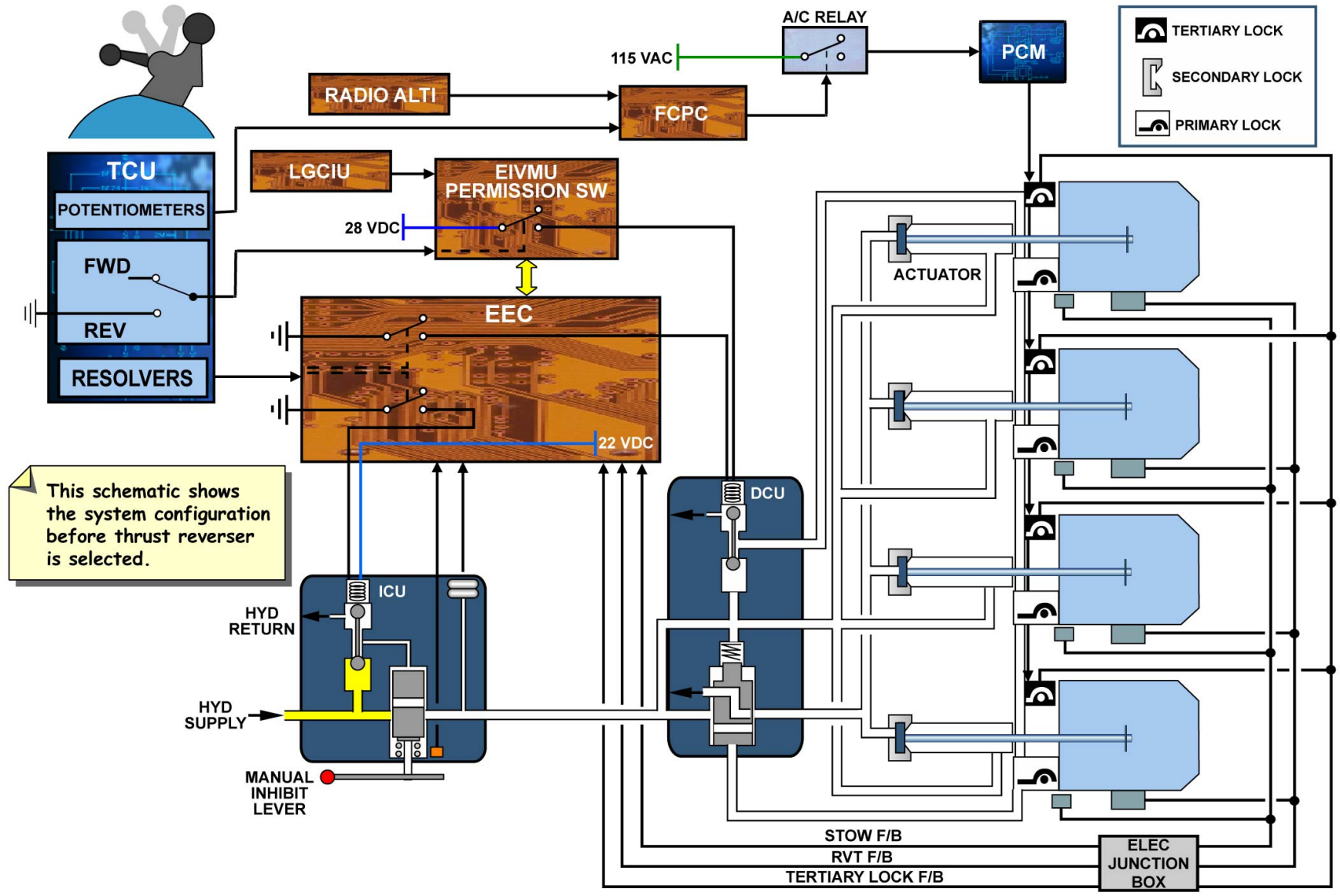

THRUST REVERSER OPERATION (DEPLOY SEQUENCE)

G7508471 - G3NT1T0 - FM70D600000071

THRUST REVERSER SYSTEM D/O (3)

THRUST REVERSER OPERATION (DEPLOY SEQUENCE) (continued)

TRANSIT MODE

When the thrust reverse lever is moved to the reverse position with a Throttle Resolver Angle (TRA) reaching -4.5°, the TCU potentiometers send a THRUST REVERSE SELECTED signal to the FCPC. When the FCPC receives the AIRCRAFT on GROUND signal (altitude < 6 feet) from the RA, the FCPC sends a signal to release the tertiary locks.

The TCU also includes a microswitch dedicated to the EIVMU. When the reverse thrust lever reaches the -7.2° position the TCU sends the THRUST REVERSE SELECTED signal to the EIVMU. When the EIVMU receives the AIRCRAFT on GROUND signal from the LGCIU, the EIVMU closes its Permission Switch, which sends 28 VDC power signal to energize the DCU solenoid.

The TCU resolvers also send the THRUST REVERSE SELECTED signal (TRA of -8.2°) to both channels of the EEC. The EEC energizes the ICU solenoid to open the isolation valve. Hydraulic pressure is thus supplied to the DCU. In addition the EEC sends a ground signal to the DCU which is now energized to send hydraulic supply to release the four primary locks in sequence. The hydraulic pressure is also directed to the stow side of the actuators in order to overstow each pivoting door in order to remove the friction on the secondary locks. The opening of the last primary lock sends pressure back to the DCU to open the Direction Control Valve (DCV). When the DCV opens, pressure is directed to the deploy side of the actuators. This pressure releases the internal secondary locks and extends the actuators. The EEC receives the reverser unlocked position signal from the stow switches and the amber "REV" indication is shown on the Engine Pressure Ratio (EPR) indicator on the EWD.

G7508471 - G3NT1T0 - FM70D600000071

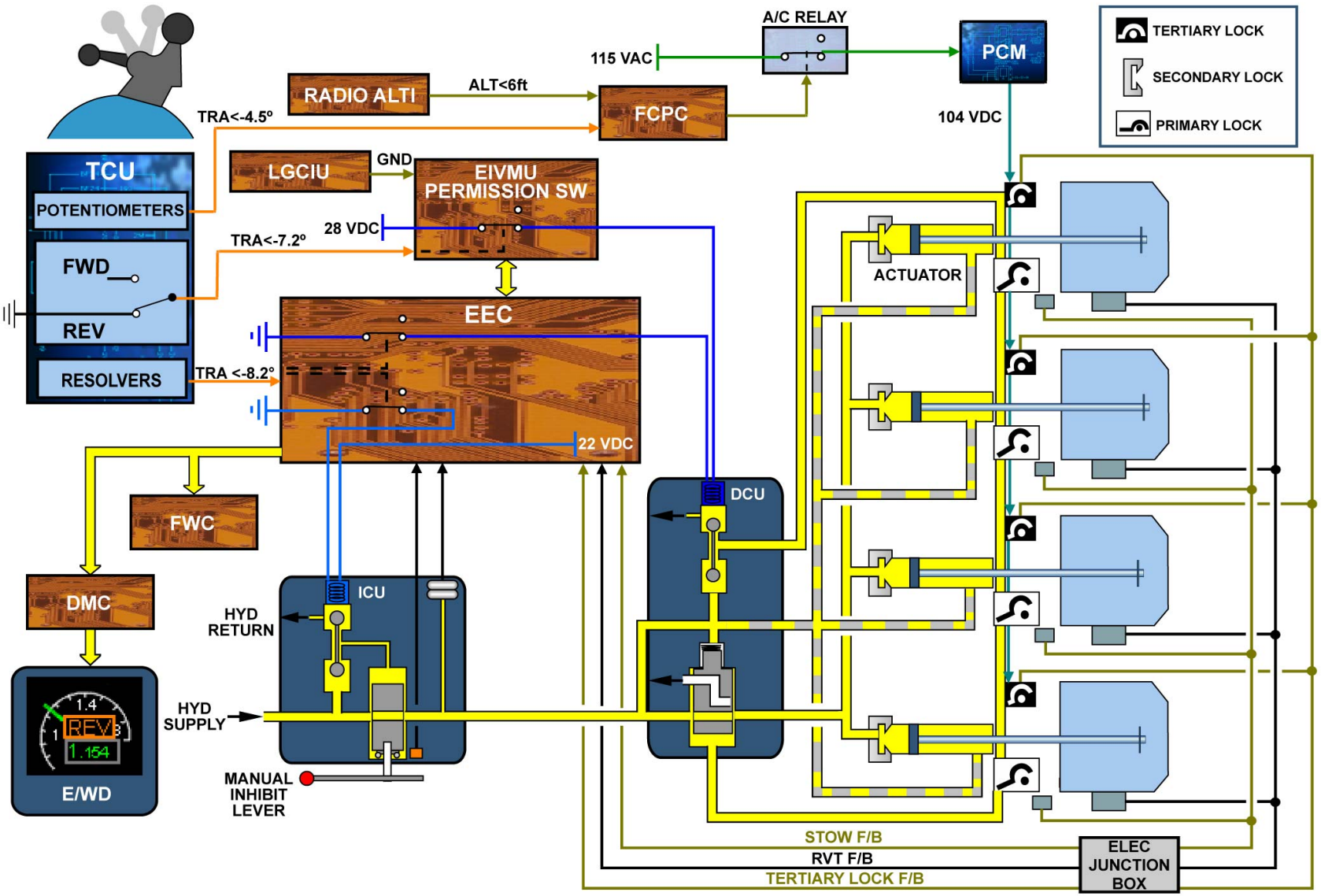

THRUST REVERSER OPERATION (DEPLOY SEQUENCE) - TRANSIT MODE

G7508471 - G3NT1T0 - FM70D600000071

THRUST REVERSER SYSTEM D/O (3)

THRUST REVERSER OPERATION (DEPLOY SEQUENCE) (continued)

FULL DEPLOYMENT

The EEC uses the RVT feedback to monitor the movement of the pivoting doors.
Increase in engine power to Max Reverse is progressively available from 70% of deployment to the fully deployed position.
The reverse thrust is managed by the EEC using N1 speed.
When the pivoting doors are at 90% of their fully deployed position, the RVTs send a signal to the EEC and the green "REV" indication replaces the amber indication on the EPR indicator.
Five seconds after the pivoting doors reach 90%, the EEC de-energizes the ICU solenoid, but the DCU solenoid remains energized until the reverse thrust lever is back in the stow position.

G7508471 - G3NT1T0 - FM70D600000071

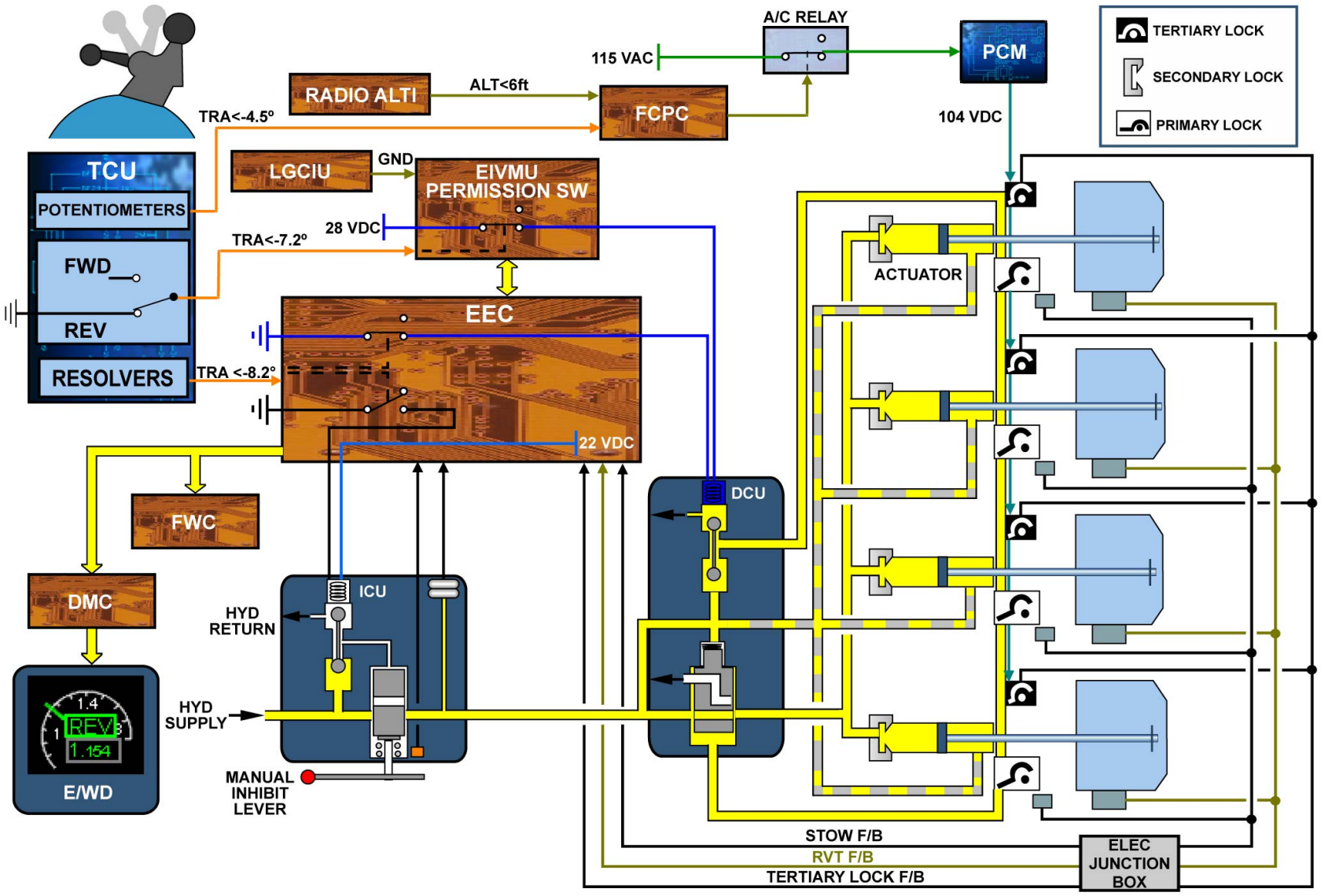

THRUST REVERSER OPERATION (DEPLOY SEQUENCE) - FULL DEPLOYMENT

G7508471 - G3NT1T0 - FM70D600000071

THRUST REVERSER SYSTEM D/O (3)

THRUST REVERSER OPERATION (STOW SEQUENCE)

When the reverse thrust levers are pushed down to the forward thrust position, the TCU sends a signal to the EEC. The EEC energizes the ICU solenoid to open the isolation valve. The DCU solenoid is de-energized so hydraulic pressure is directed to the stow side of the actuators in order to close the pivoting doors. The stow transit mode is indicated by an amber "REV" indication on the EPR indicator.

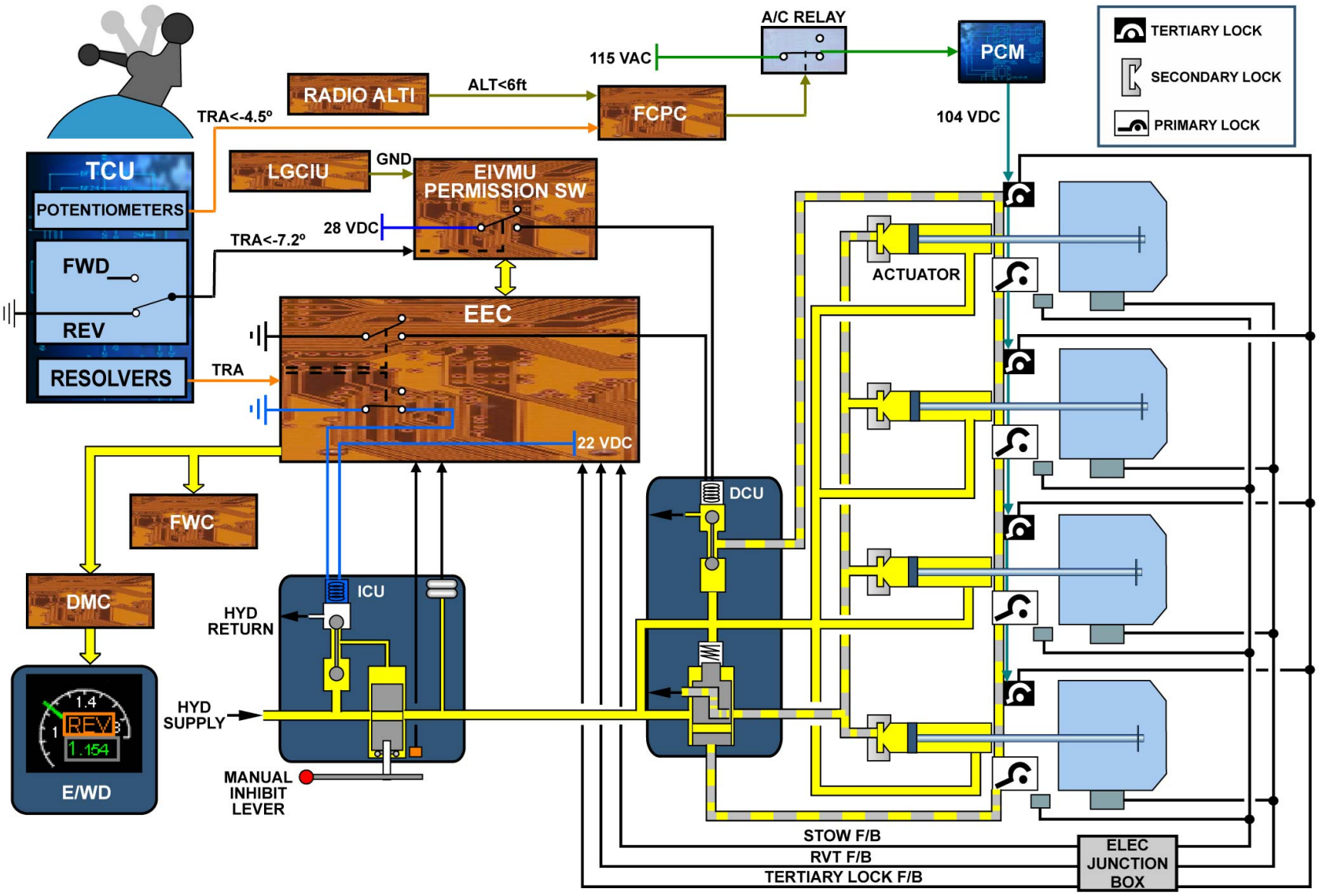

THRUST REVERSER OPERATION (STOW SEQUENCE)

G7508471 - G3NT1T0 - FM70D600000071

THRUST REVERSER SYSTEM D/O (3)

THRUST REVERSER OPERATION (STOW SEQUENCE) (continued)

STOW POSITION

The pivoting doors go to the overstow position to enable the primary, secondary and tertiary locks to engage mechanically. The doors will return to the normal stow position once the EEC has de-energized the ICU solenoid to shut off the hydraulic supply. The EEC, using feedback signals from the stow switches and RVTs, confirms the reverser stowed condition and the amber "REV" indication disappears from the EPR indicator. The ICU solenoid is de-energized when the doors are confirmed stowed for more than 5 seconds, and the tertiary locks are de-energized when the TRA > -4.5° for more than 15 seconds.

G7508471 - G3NT1T0 - FM70D600000071

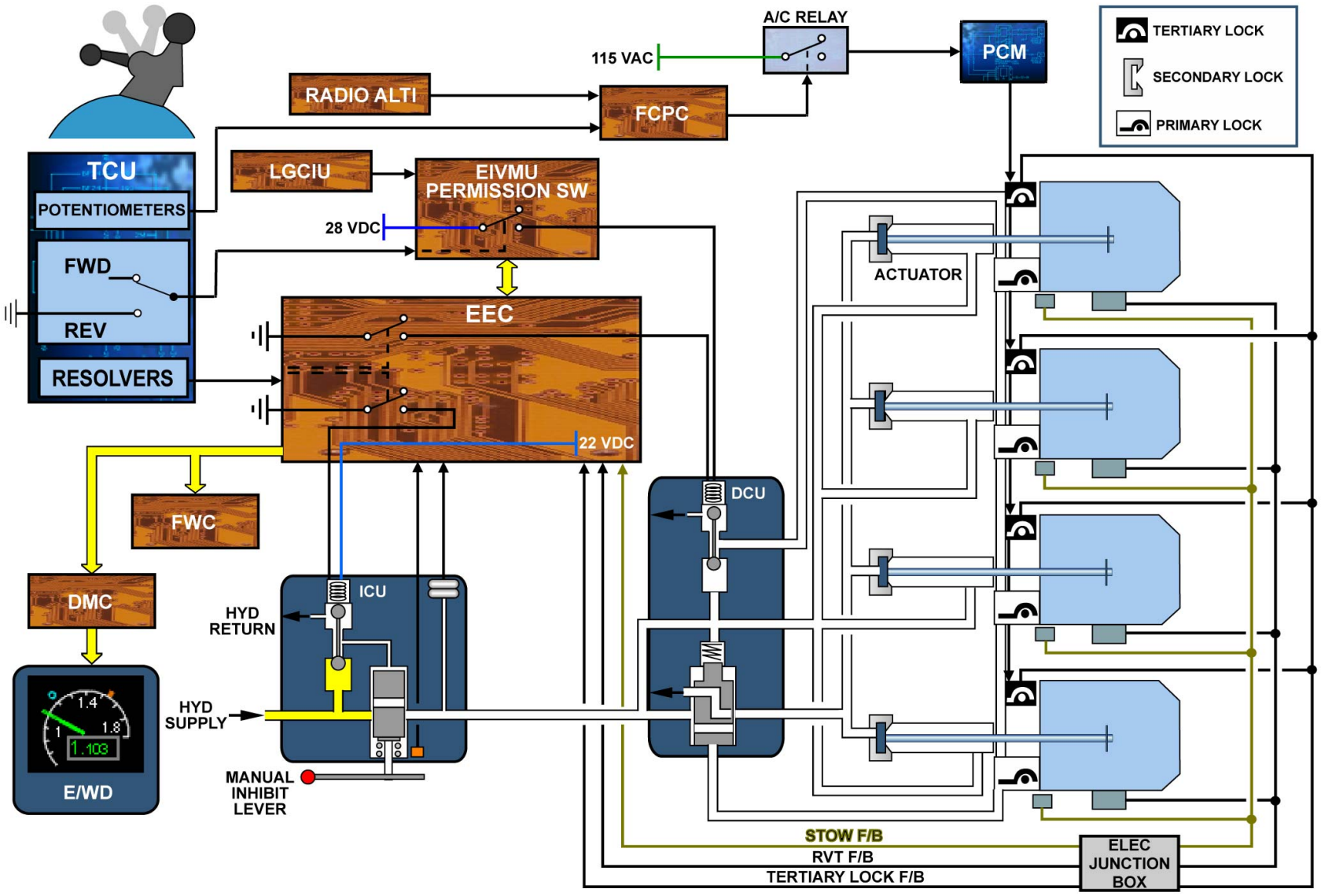

THRUST REVERSER OPERATION (STOW SEQUENCE) - STOW POSITION

G7508471 - G3NT1T0 - FM70D600000071

THRUST REVERSER SYSTEM D/O (3)

ABNORMAL OPERATIONS

In case of thrust reverser abnormal operation, various warnings are triggered on ECAM as follows:
"REV UNLOCKED" is triggered if one of the reverser pivoting doors is unlocked in the stowed position with no deploy order.
As a result the EEC limits the thrust of the affected engine to idle.
"REV FAULT" is triggered in case of:
- autorestow,
- aircraft ground/ flight information failure,
- loss of power supply on both DCU channels,
- EIVMU permission switch failed closed,
- class 1 thrust reverser fault.

As a result the EEC limits the thrust of the affected engine to idle.
"REV PRESSURIZED" is triggered if the thrust reverser system is pressurized while the reverser pivoting doors are stowed and locked with no deploy order.
As a result the EEC limits the thrust of the affected engine to idle.
"REV INHIBITED" appears if the thrust reverser system is locked in the stowed position by maintenance action.
"REV SET" appears if the reverse thrust is selected in flight.

G7508471 - G3NT1T0 - FM70D600000071

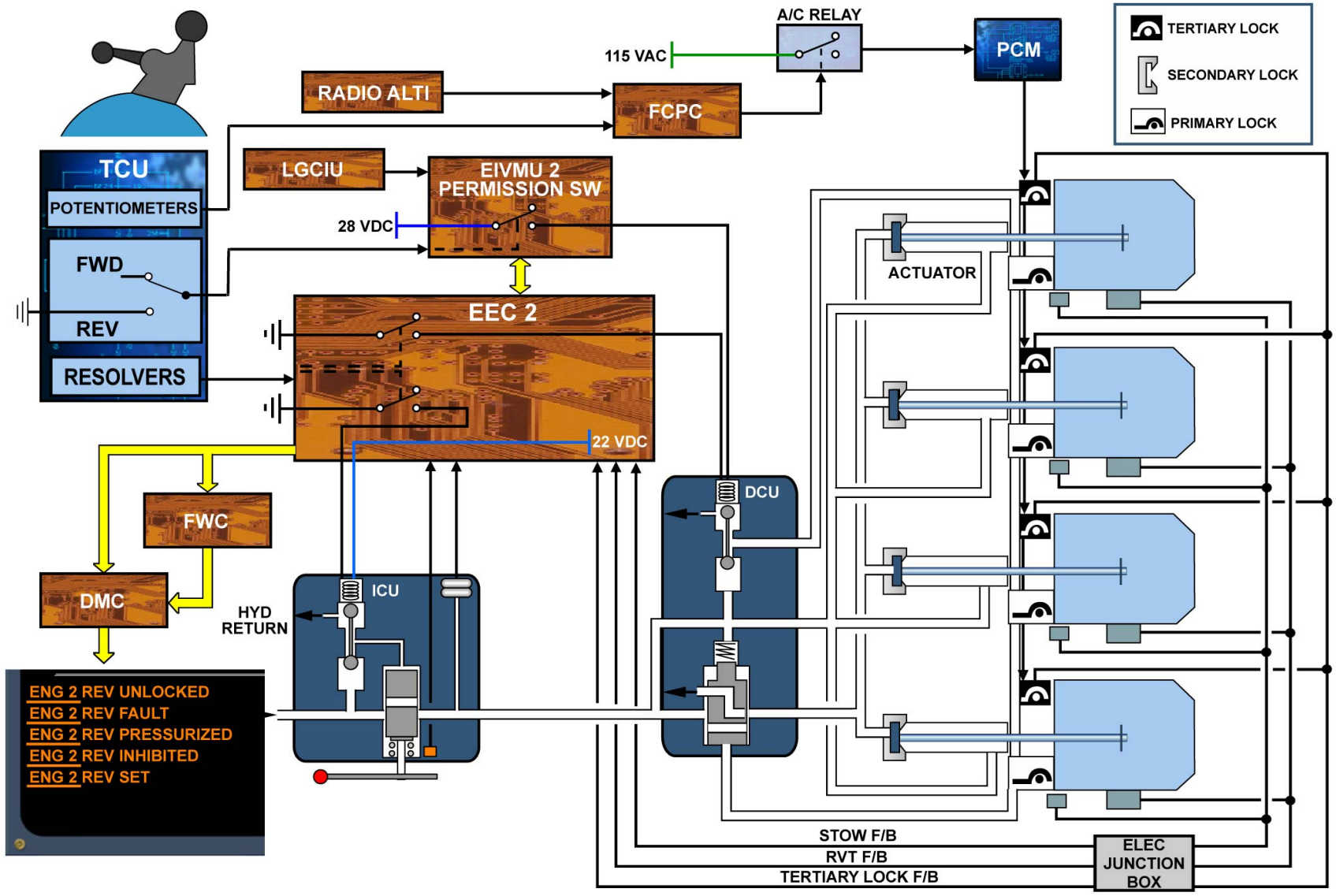

ABNORMAL OPERATIONS

G7508471 - G3NT1T0 - FM70D600000071

OIL SYSTEM D/O (3)

GENERAL

The primary function of the oil system is to supply sufficient oil at the correct temperature and pressure to the engine internal drives, gears and bearings for lubrication, to decrease temperature and keep wear to a minimum. The oil system is also designed to heat the fuel to prevent fuel icing.

G7508471 - G3NT1T0 - FM70D700000071

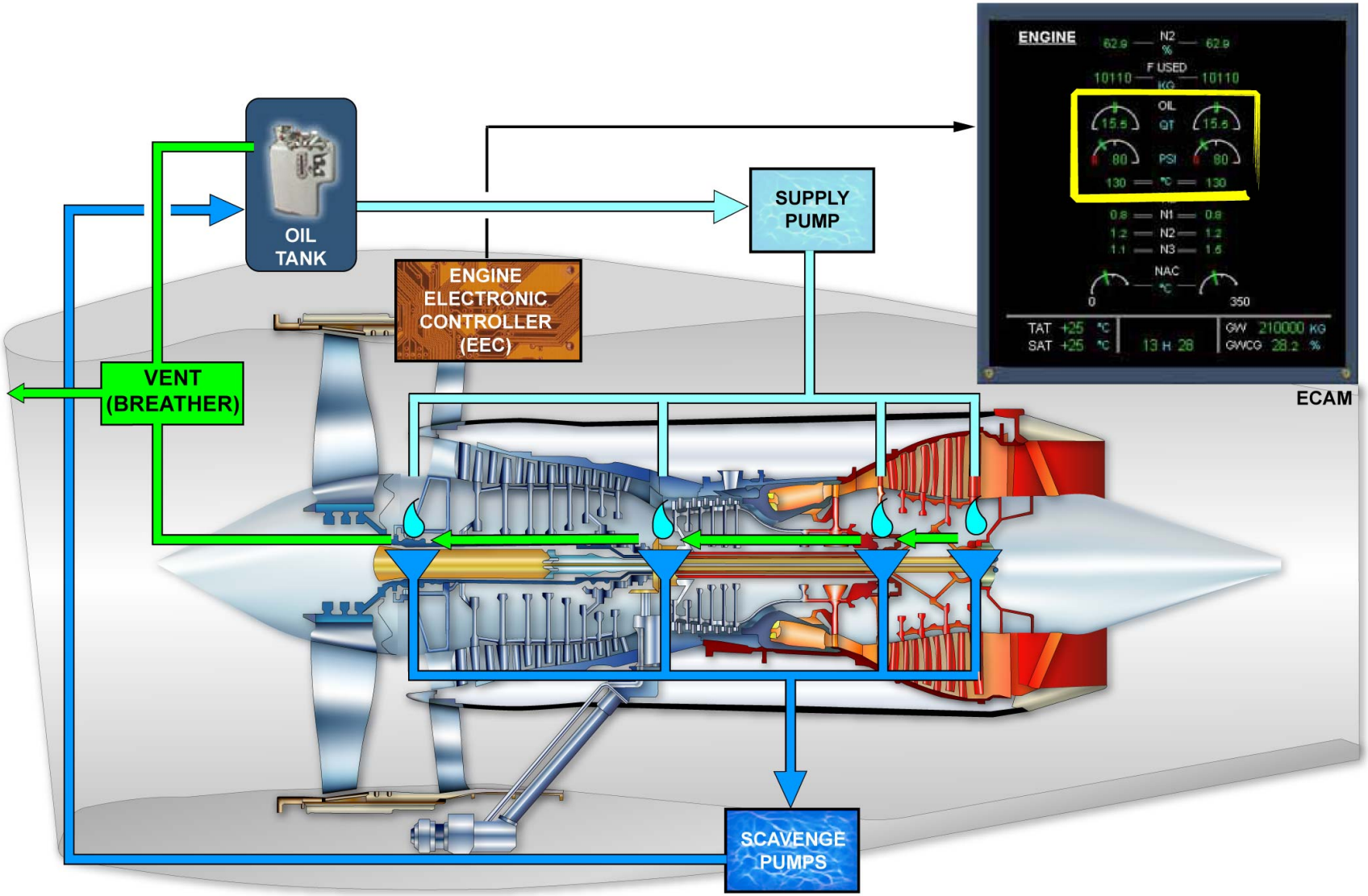
OIL TANK
SUPPLY PUMP
ENGINE ELECTRONIC CONTROLLER (EEC)
VENT (BREATHER)
SCAVENGE PUMPS
ECAM
ENGINE
N2
F USED
OIL
QT
PSI
N1
N2
N3
NAC
TAT
SAT
GW
GWCG

GENERAL

OIL SYSTEM D/O (3)

DESCRIPTION

The oil system is composed of different items.

OIL TANK

The oil tank is attached to the Low Pressure (LP) compressor case, on the right side of the engine. It stores the oil used by the engine to lubricate and cool the bearings and gears. It can be replenished by gravity from the oil filler cap and has a maximum total capacity of 23.7 litres. A sight-glass installed on the side of the oil tank gives a visual indication of the oil level.

G7508471 - G3NT1T0 - FM70D700000071

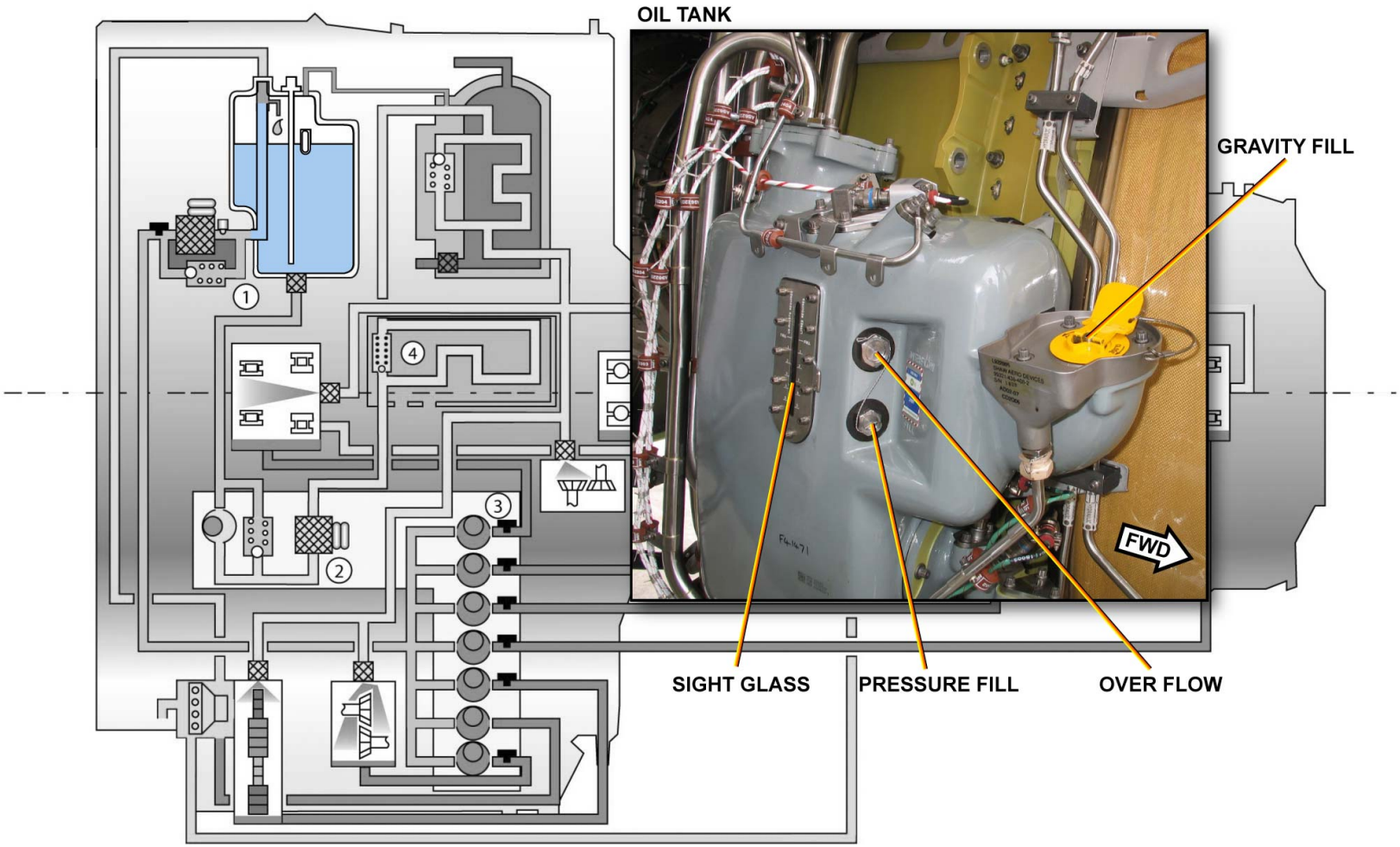

DESCRIPTION - OIL TANK

G7508471 - G3NT1T0 - FM70D700000071

OIL SYSTEM D/O (3)

DESCRIPTION (continued)

OIL QUANTITY TRANSMITTER

The oil quantity transmitter is an assembly, and includes:
- a tube with holes along its length to let the oil in the transmitter be measured,
- a Printed Circuit Board (PCB) with switches and resistors in rows attached along the length of the inner tube surface,
- a float assembly that contains two magnets.

As the float assembly moves the PCB up or down, the magnets cause the adjacent switch on the PCB to close. This changes the voltage and thus the signal sent to the Engine Electronic Controller (EEC) channel A. It is calibrated to give a value of:
- 6V DC if the tank is full.
- 0V DC if the tank is empty.

An anti-siphon device prevents oil from draining by gravity from the tank to the pump into the gearbox after engine shut down. It uses air from the tank.

G7508471 - G3NT1T0 - FM70D700000071

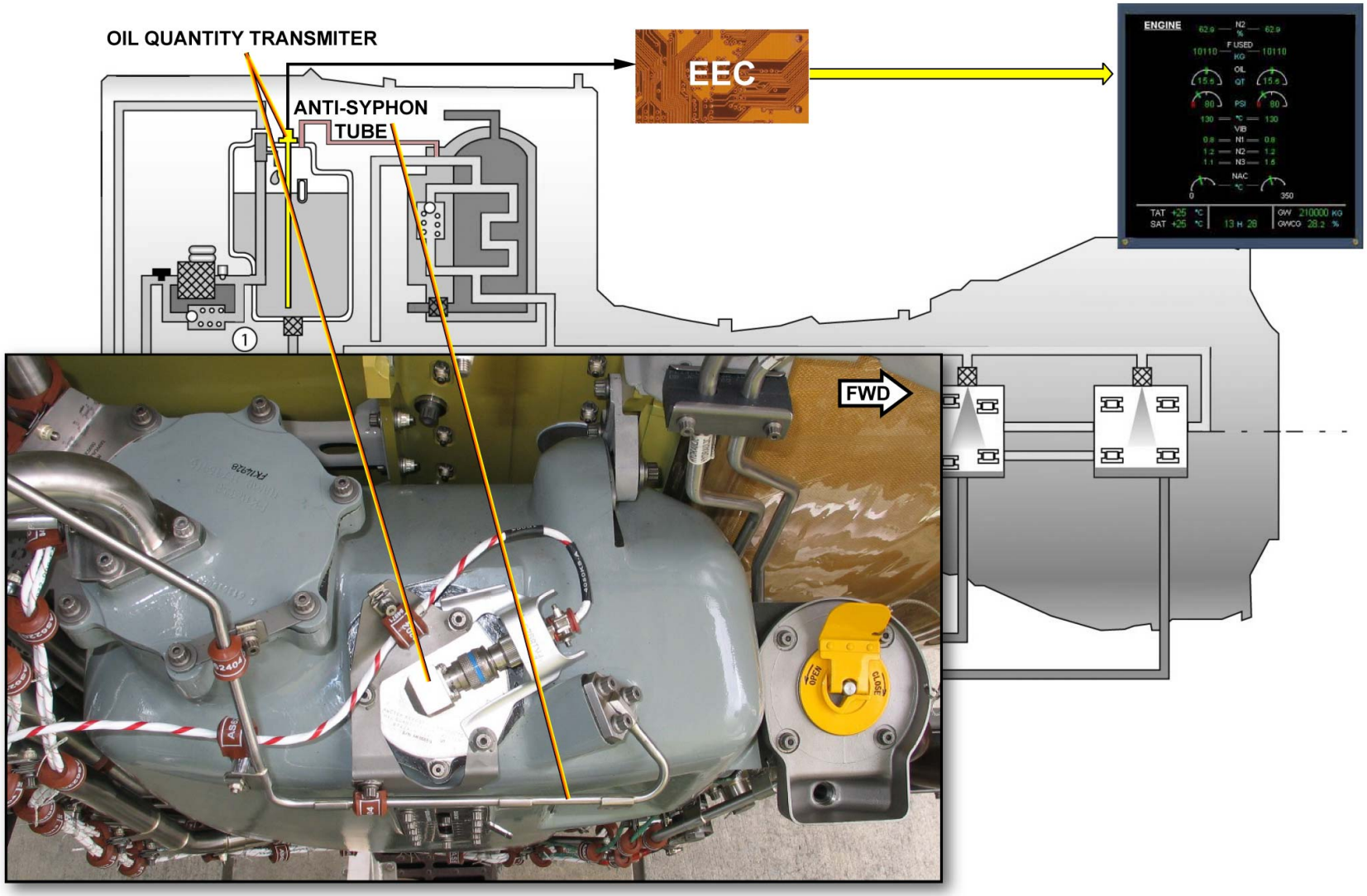

DESCRIPTION - OIL QUANTITY TRANSMITTER

OIL SYSTEM D/O (3)

DESCRIPTION (continued)

OIL PUMP ASSEMBLY

Oil pump assembly is installed on the rear face of the external gearbox. It has eight gyrotor type pumps. There is one pressure section pump unit, which raises the oil pressure to the bearings and gears. There are also seven scavenge section pump units, which scavenge oil from the various areas of the engine back to the oil tank. The pump units are assembled into a pump stack on a single drive shaft.

G7508471 - G3NT1T0 - FM70D700000071

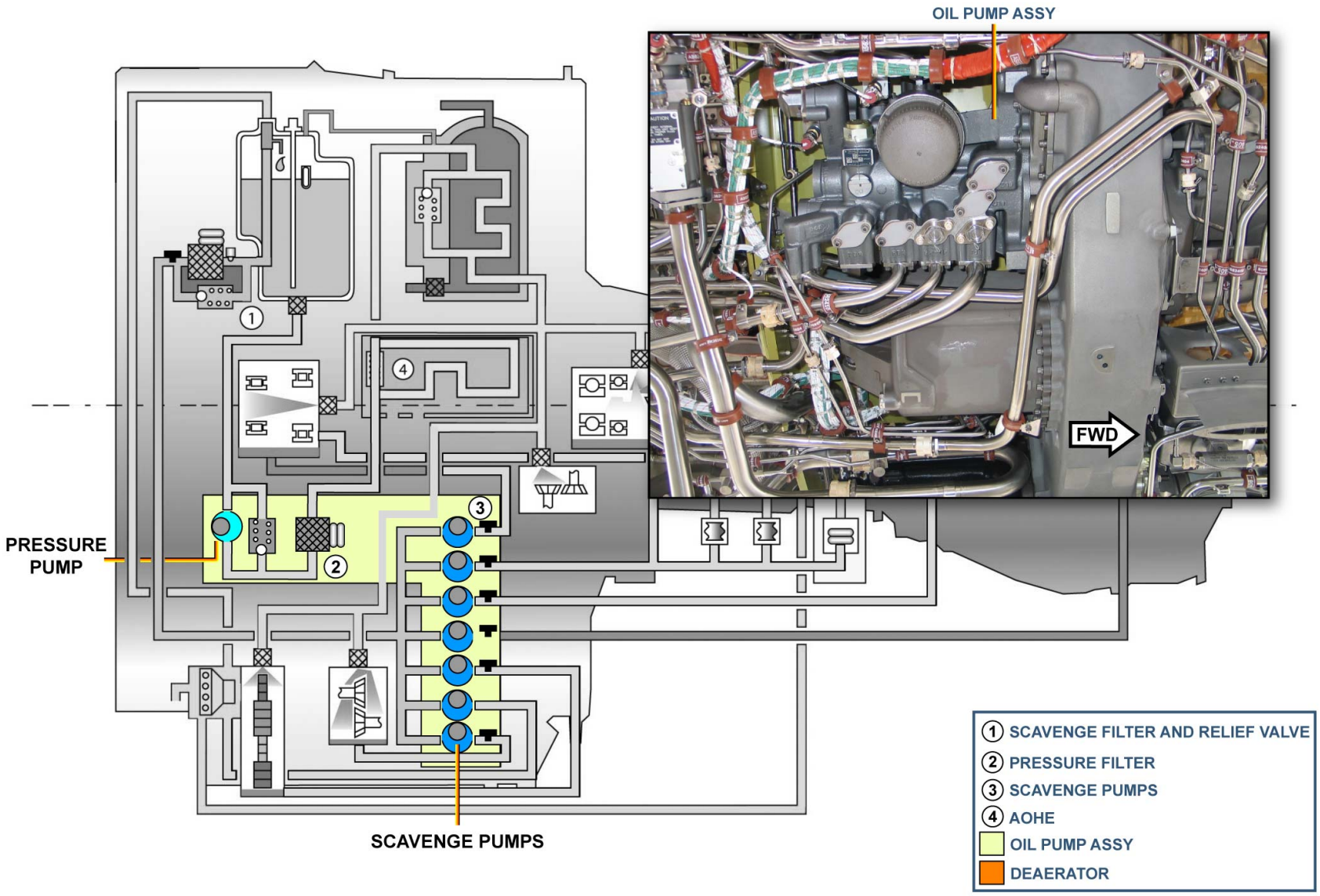

DESCRIPTION - OIL PUMP ASSEMBLY

G7508471 - G3NT1T0 - FM70D700000071

OIL SYSTEM D/O (3)

DESCRIPTION (continued)

COLD START PRESSURE RELIEF VALVE

The cold start pressure relief valve is installed downstream of the pressure pump mechanism side. It protects the oil system by relieving the pressure back to the pump inlet, when exceeding 580 PSID. The valve is normally closed during engine operation, and will only open with a cold oil condition or blockage of the system.

PRESSURE FILTER AND PRESSURE FILTER DIFFERENTIAL PRESSURE SWITCH

The pressure oil filter is installed at the bottom of the oil pump assembly in filter housing and contains a 145-micron filter element. The element is of metal type and can be removed and examined. After inspection it can be cleaned and used again providing it is not damaged. A pressure filter differential pressure switch, installed on the filter housing, contains a differential pressure sensitive mechanism, which monitors the filter condition.

G7508471 - G3NT1T0 - FM70D700000071

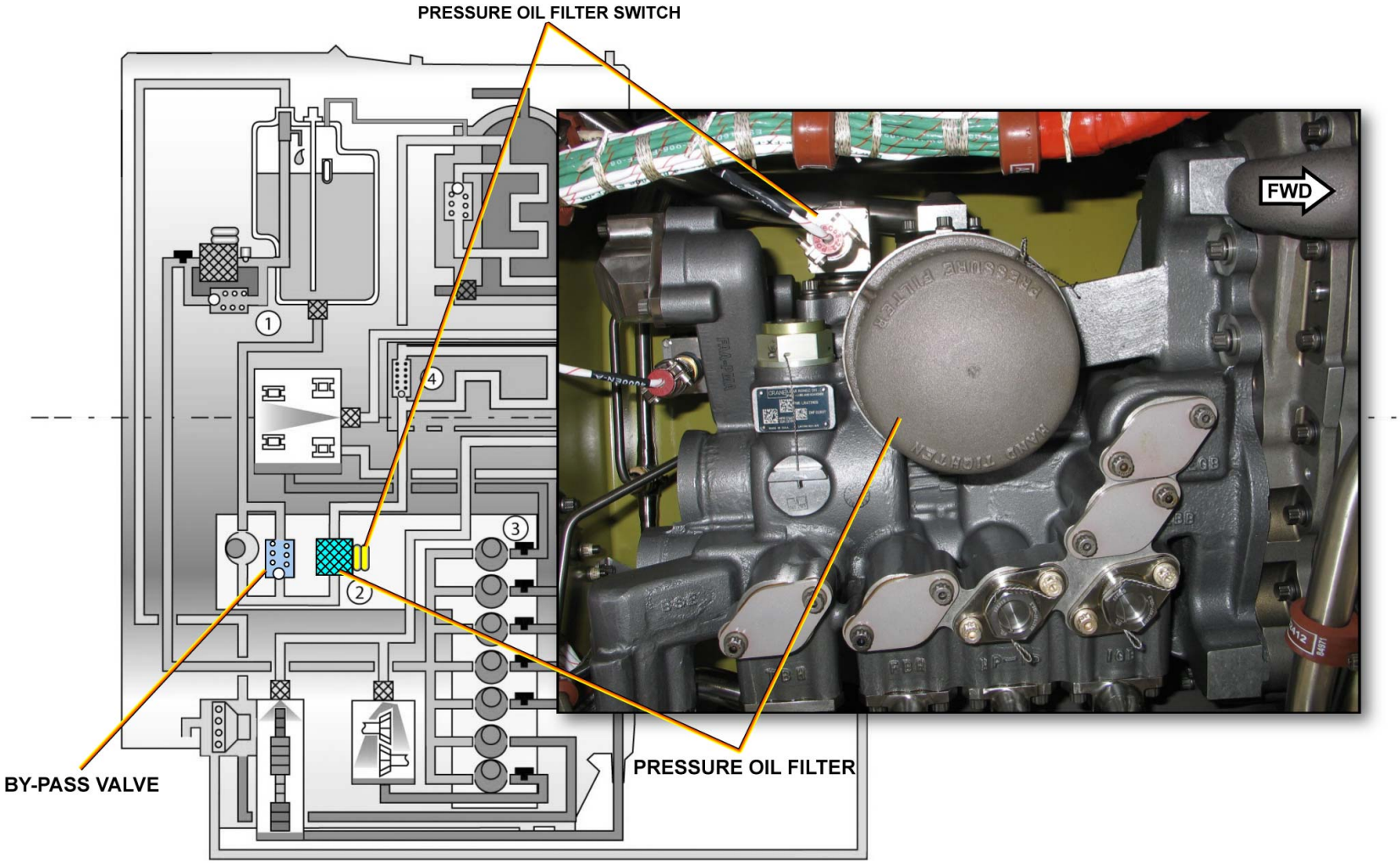

G7508471 - G3NT1T0 - FM70D700000071

DESCRIPTION - COLD START PRESSURE RELIEF VALVE & PRESSURE FILTER AND PRESSURE FILTER DIFFERENTIAL PRESSURE SWITCH

OIL SYSTEM D/O (3)

DESCRIPTION (continued)

AIR OIL HEAT EXCHANGER (AOHE)

The Air Oil Heat Exchanger (AOHE) is installed on the lower right hand side of the fan case below the oil tank. The AOHE is divided into two main parts:
- a heat exchanger assembly which keep the engine oil and fuel temperature in specified limits (to give the best engine performance), so, when necessary, LP compressor air is used to decrease the oil temperature,
- a air modulating valve assembly which adjusts the type and quantity of compressor airflow across the heat exchanger assembly.

G7508471 - G3NT1T0 - FM70D700000071

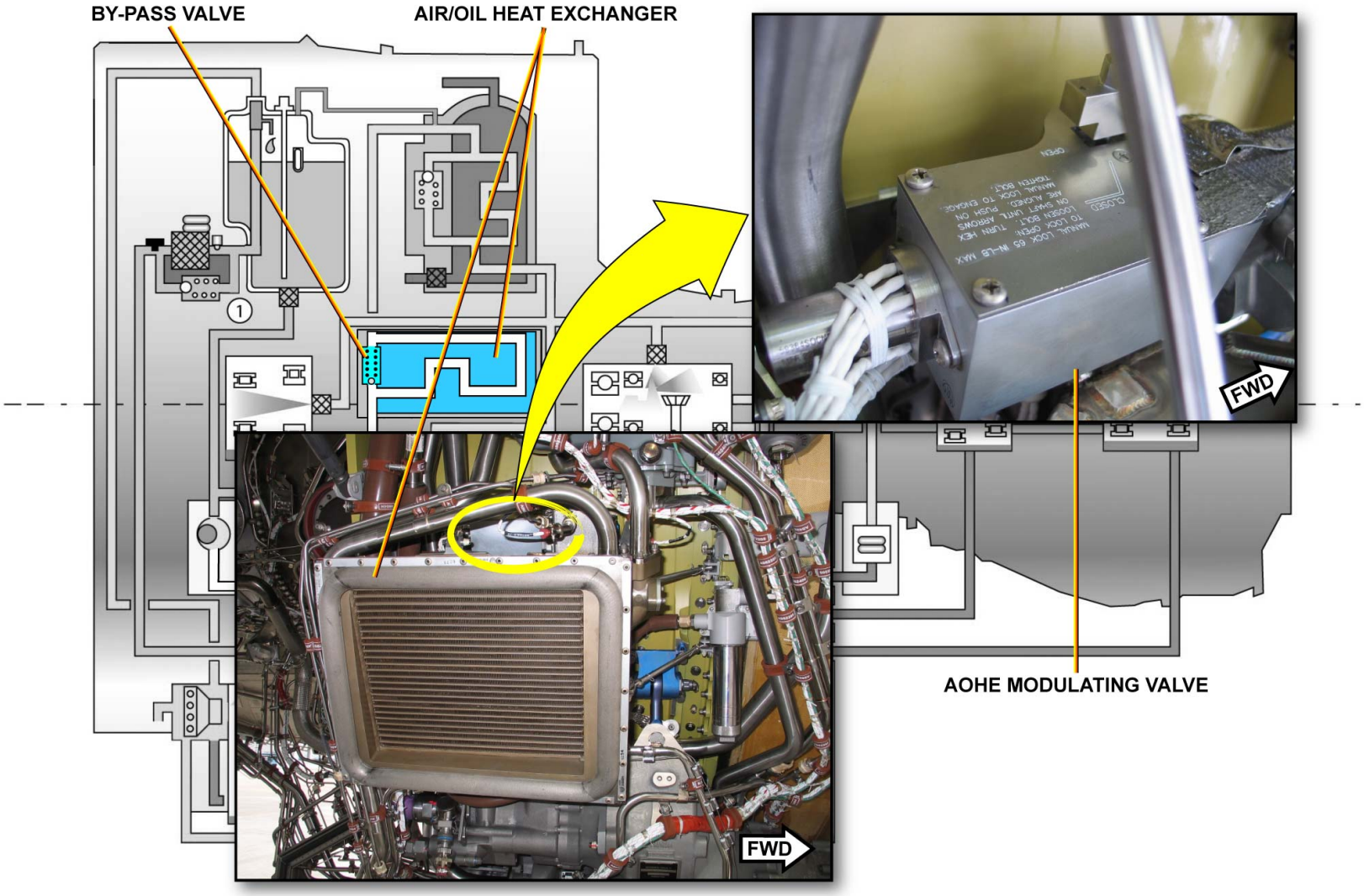

DESCRIPTION - AIR OIL HEAT EXCHANGER (AOHE)

OIL SYSTEM D/O (3)

DESCRIPTION (continued)

FUEL OIL HEAT EXCHANGER (FOHE)

The Fuel Oil Heat Exchanger (FOHE) is installed on the upper right hand side of the fan case above the oil tank. The FOHE is divided into two main parts:
- a heat exchanger assembly,
- a fuel filter housing assembly.

The heat exchanger assembly has a core with fuel tubes attached to baffle and end plates. The oil cools as it flows around the tubes and plates. A bypass valve makes sure that the core is protected in case of oil abnormal pressure. There is an oil drain plug at the bottom of the core for servicing purposes.

G7508471 - G3NT1T0 - FM70D700000071

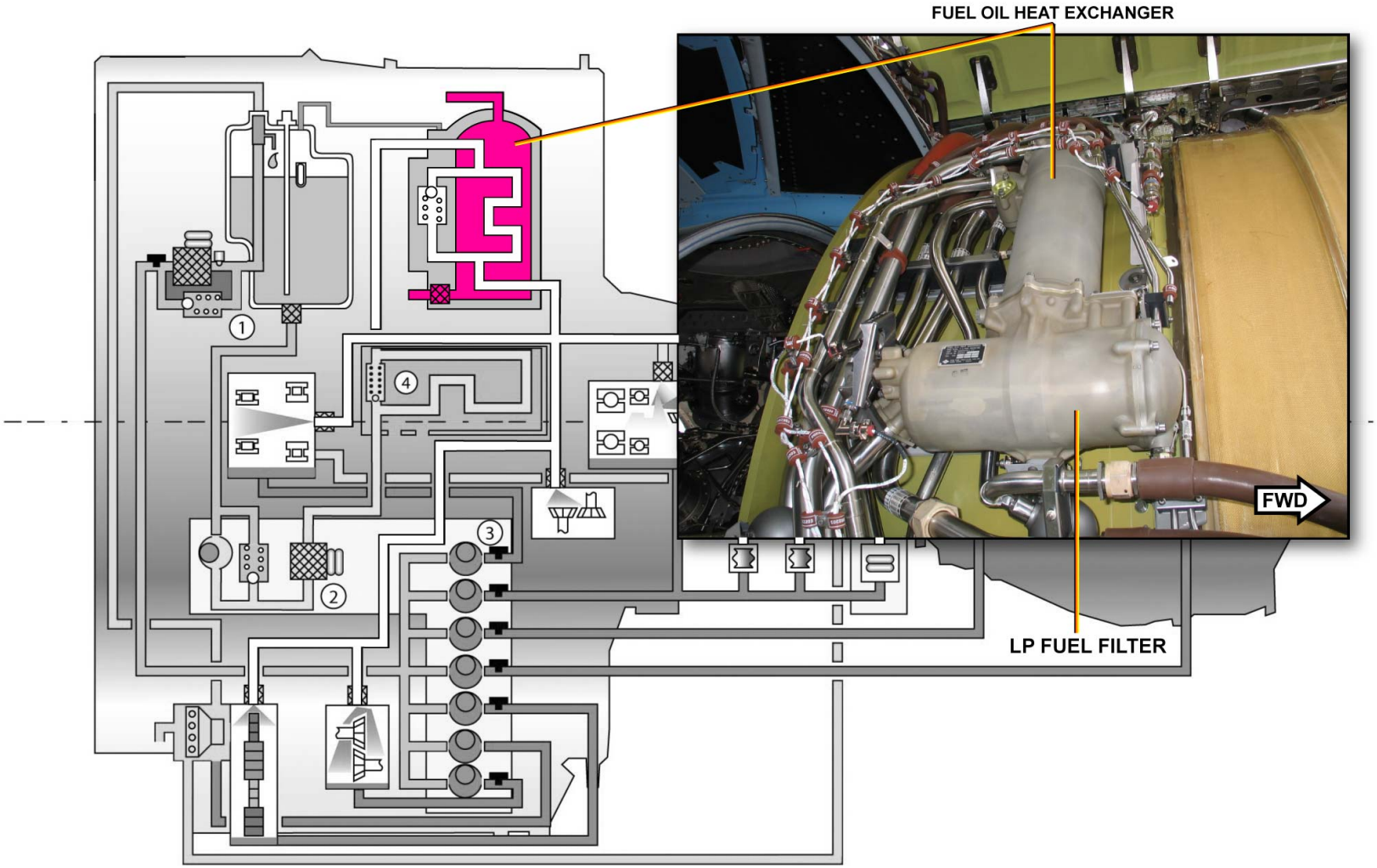

DESCRIPTION - FUEL OIL HEAT EXCHANGER (FOHE)

G7508471 - G3NT1T0 - FM70D700000071

OIL SYSTEM D/O (3)

DESCRIPTION (continued)

PRESSURE TRANSMITTERS

Two oil pressure transmitters are installed on the engine LH side, near the Air/Oil Heat Exchanger (AOHE). Each transmitter is electrically connected to an EEC channel. The difference of the two oil pressures will cause a voltage output signal.

G7508471 - G3NT1T0 - FM70D700000071

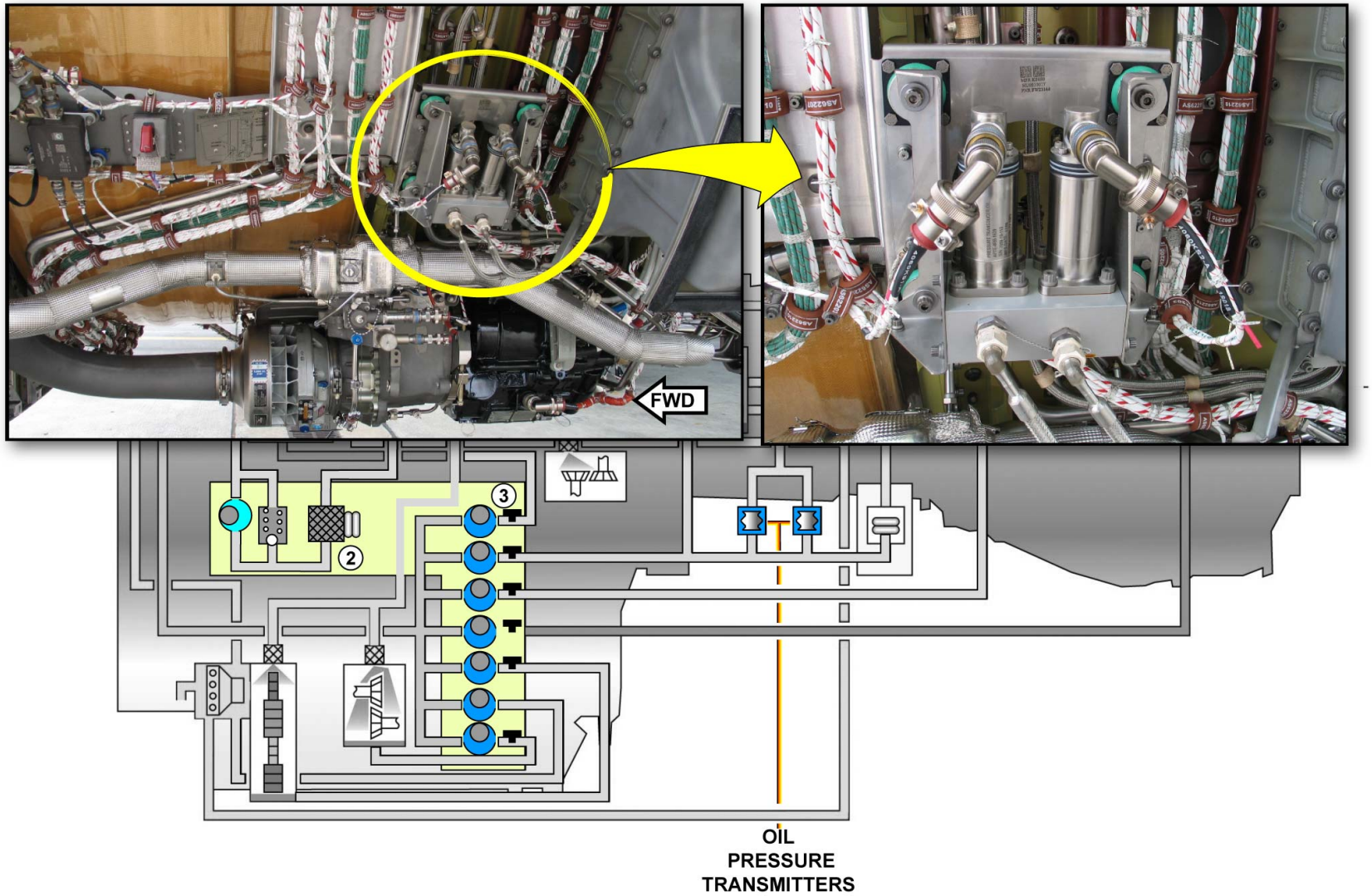

DESCRIPTION - PRESSURE TRANSMITTERS

G7508471 - G3NT1T0 - FM70D700000071

OIL SYSTEM D/O (3)

DESCRIPTION (continued)

LOW OIL PRESSURE SWITCH

The switch compares the main oil pressure and the scavenge oil pressure.
The switch gives an indication directly to the cockpit if the difference in oil pressures becomes too low.

G7508471 - G3NT1T0 - FM70D700000071

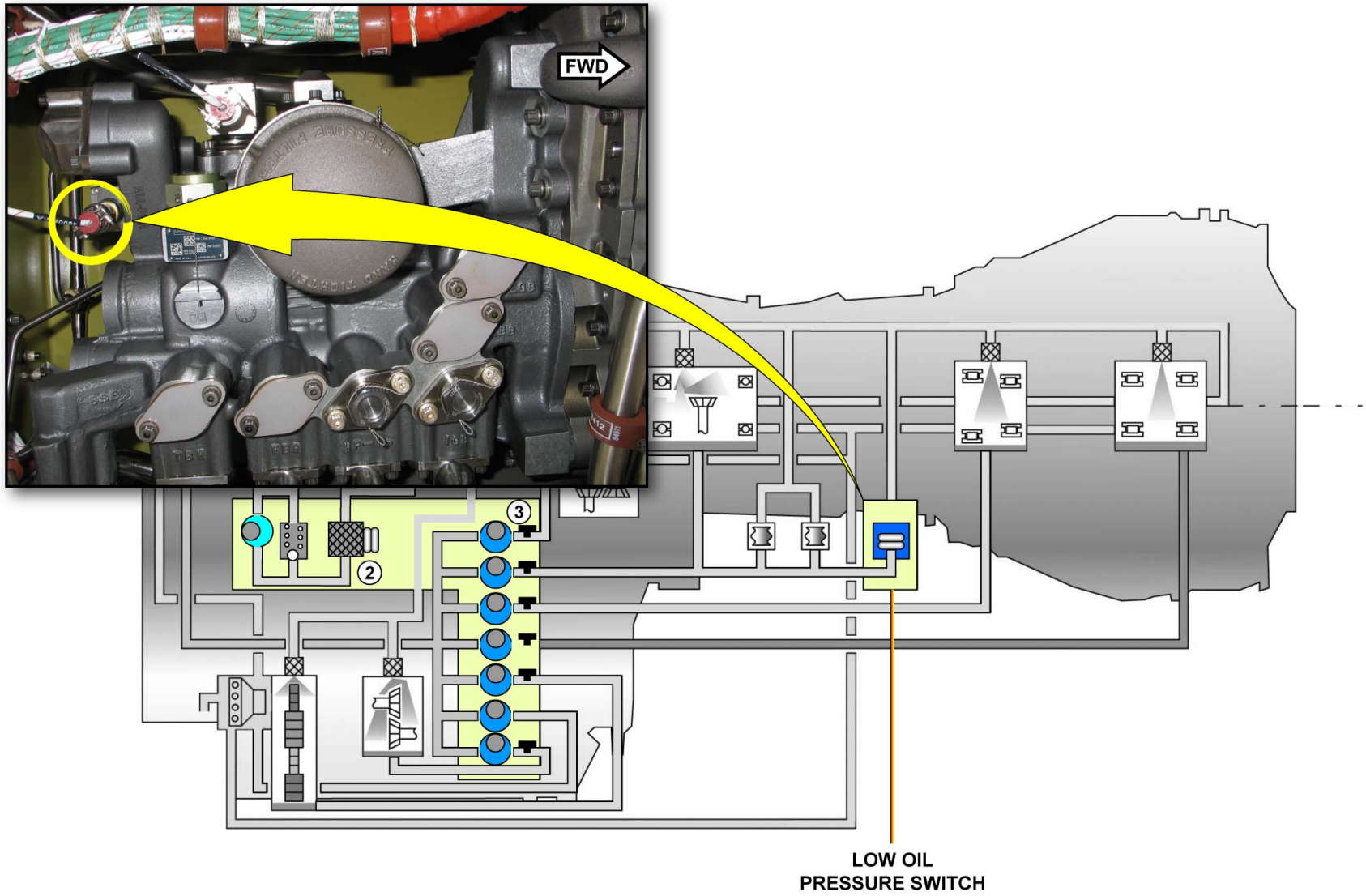

DESCRIPTION - LOW OIL PRESSURE SWITCH

OIL SYSTEM D/O (3)

DESCRIPTION (continued)

MAGNETIC CHIP DETECTORS

A magnetic chip detector is installed on each of the 6 return lines to the scavenge pumps. Each chip detector has a magnetic tip to collect particles and a thread for installation into its housing. The housing is designed for the installation of a strainer. When it is installed, the chip detector is safe with a lockwire. The detectors are used for damage location determination after electrical chip detector detection.

G7508471 - G3NT1T0 - FM70D700000071

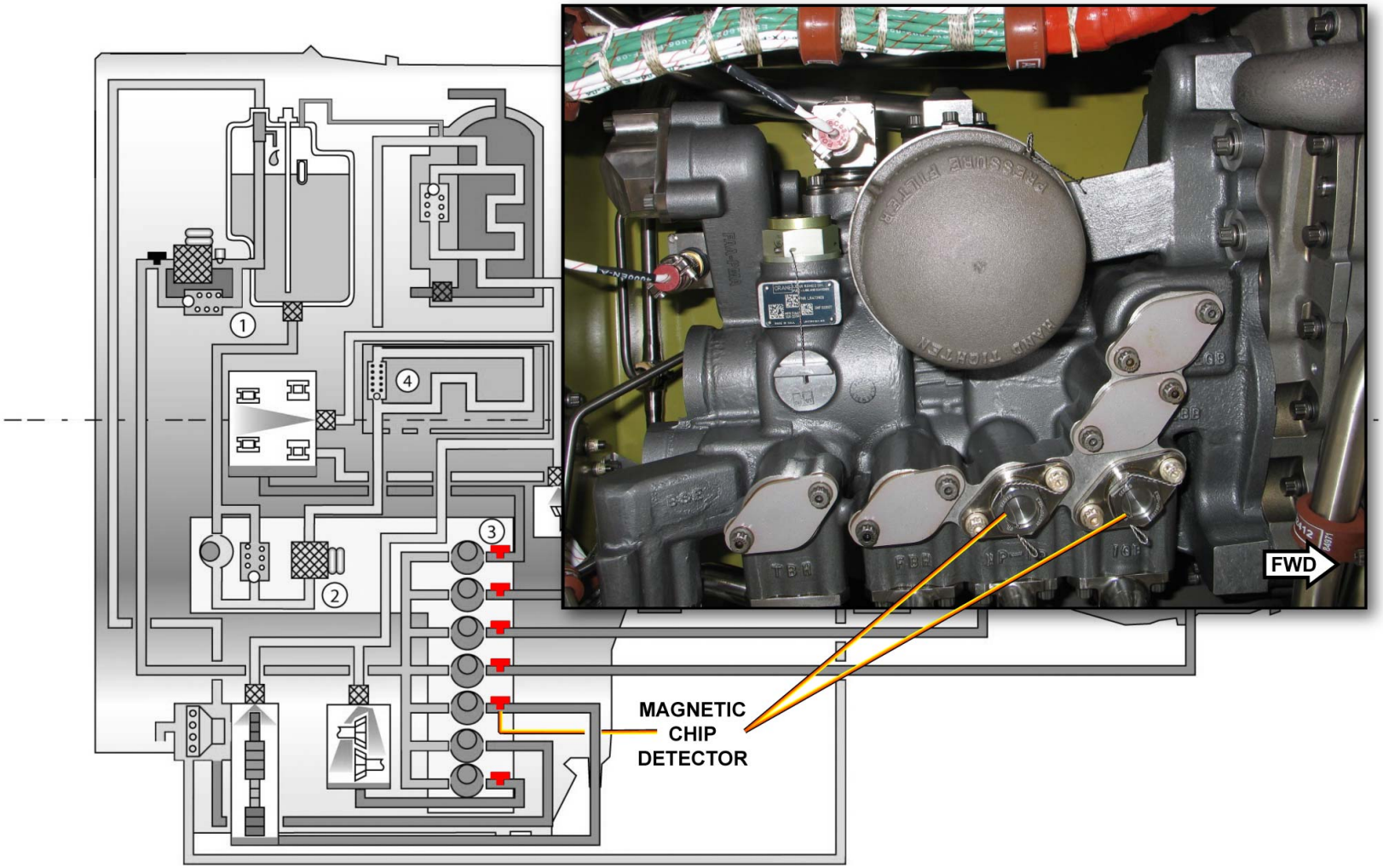

DESCRIPTION - MAGNETIC CHIP DETECTORS

G7508471 - G3NT1T0 - FM70D700000071

OIL SYSTEM D/O (3)

DESCRIPTION (continued)

MASTER MAGNETIC CHIP DETECTOR

An Master Magnetic Chip Detector (MMCD) is installed downstream of the scavenge pumps, in the scavenge filter assembly.

G7508471 - G3NT1T0 - FM70D700000071

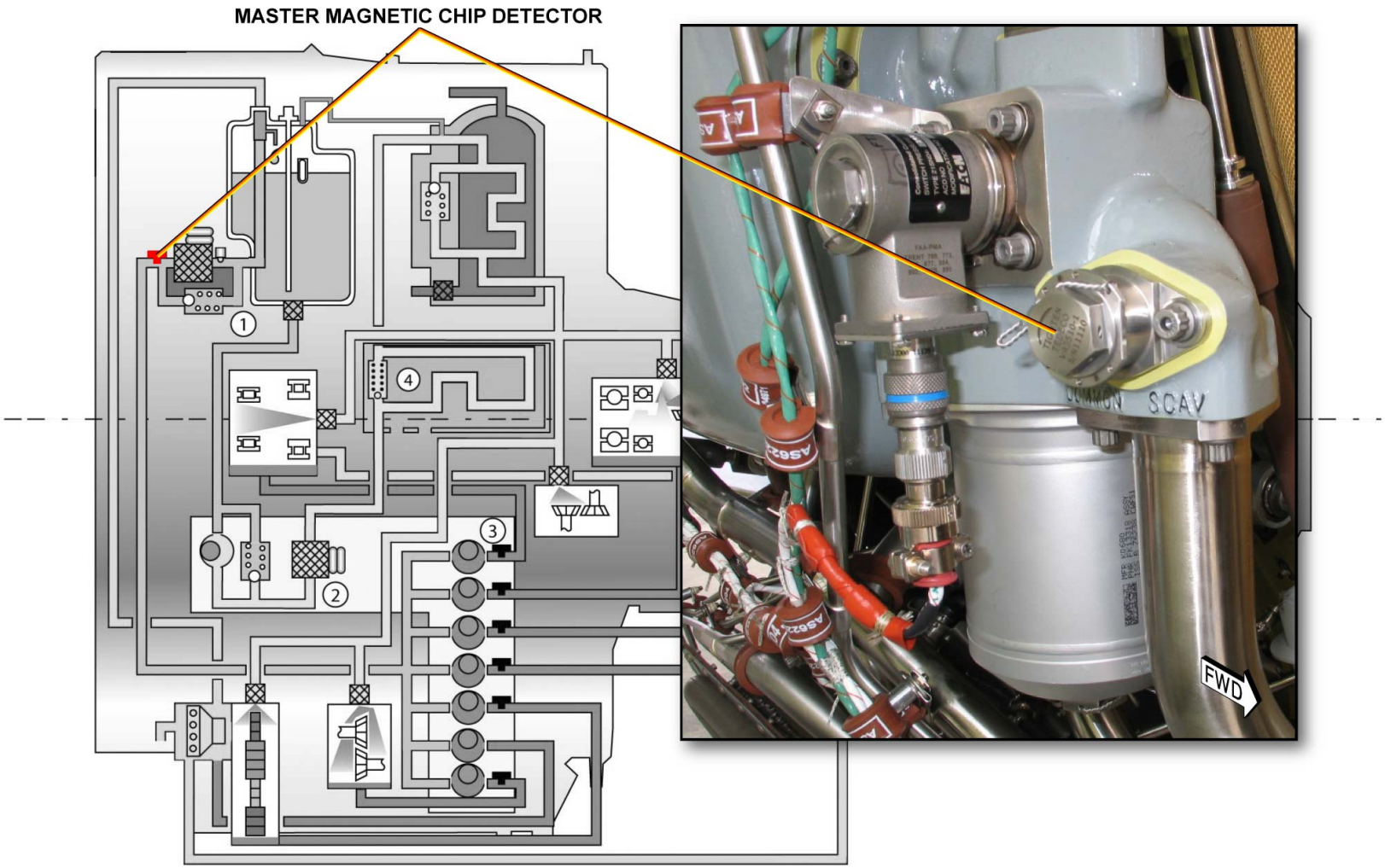

DESCRIPTION - MASTER MAGNETIC CHIP DETECTOR

G7508471 - G3NT1T0 - FM70D700000071

OIL SYSTEM D/O (3)

DESCRIPTION (continued)

OIL SCAVENGE FILTER ASSEMBLY

The scavenge oil filter assembly is installed on the lower part of the oil tank.
The assembly is composed of:
- a filter housing,
- a filter element,
- a bypass valve.

The filter cover has a bypass valve, which lets the oil flow through to the oil tank if the element becomes clogged. An oil drain plug in the bottom of the housing lets the oil drain when the element has to be replaced. The filter element is not cleanable. A pressure filter differential pressure switch, installed on the filter housing, contains a differential pressure sensitive mechanism, which monitors the filter condition.

OIL TEMPERATURE SENSORS

The two oil temperature sensors are installed between the scavenge filter element and oil tank, on the scavenge filter housing. Each sensor is electrically connected to an EEC channel and has a stainless steel case, which contains a temperature sensitive element.

G7508471 - G3NT1T0 - FM70D700000071

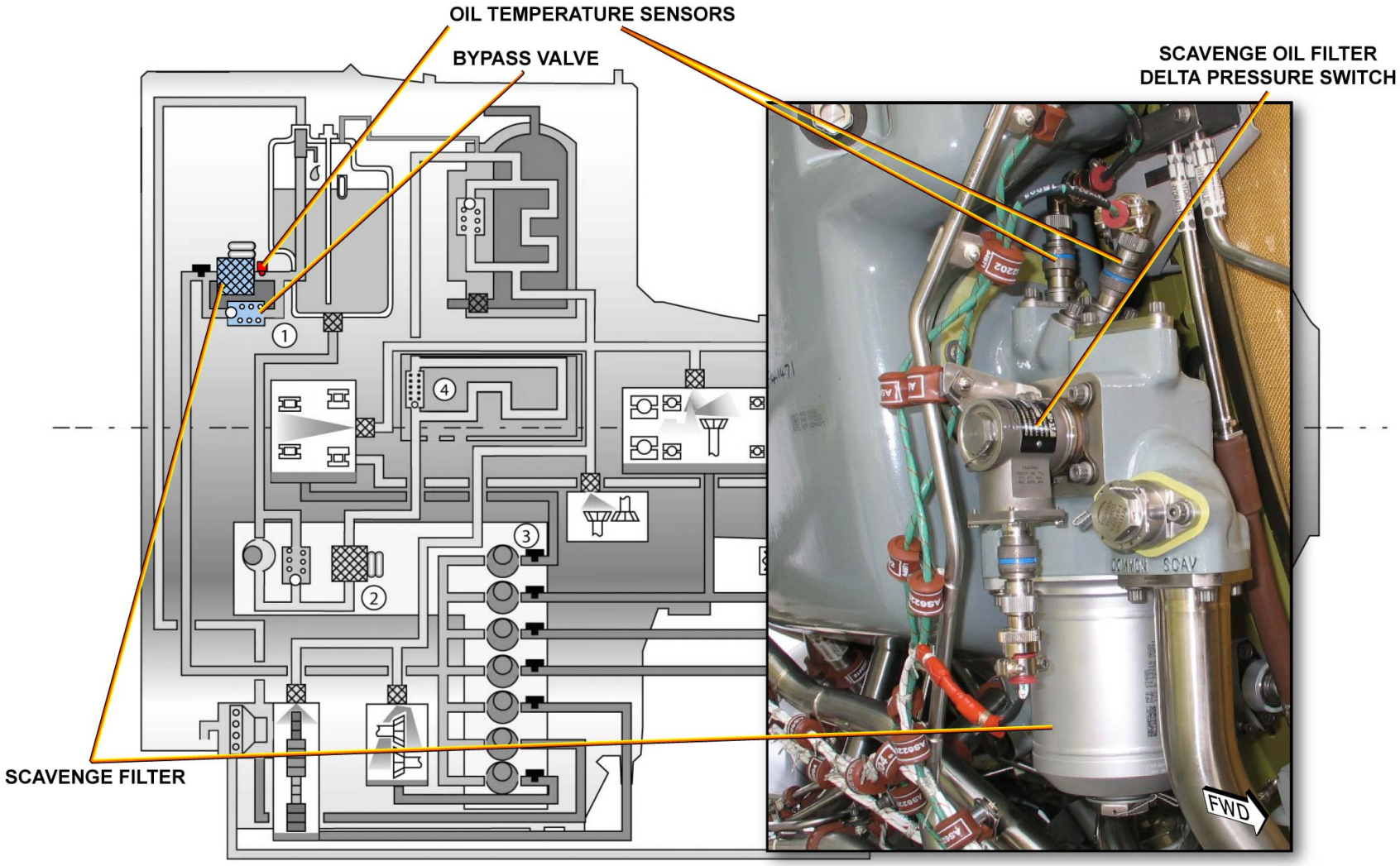

DESCRIPTION - OIL SCAVENGE FILTER ASSEMBLY & OIL TEMPERATURE SENSORS

OIL SYSTEM D/O (3)

OIL SYSTEM OPERATION

The operation of the oil system is divided into three parts:
- storage,
- pressure flow,
- scavenge flow and vent.

PRESSURE FLOW

The oil is drawn from the oil tank through a strainer by suction from the pressure pump as the gearbox starts to turn. The pump assembly also includes a cold-start relief valve, which protects the system by relieving excessive pressure back to the pump inlet. The pressure pump increases the pressure and supplies oil through the pressure filter to the Air Oil Heat Exchanger (AOHE).
The AOHE is made up of a heat exchanger and an air modulating valve. In certain operating conditions, the AOHE uses LP air to decrease the oil temperature. From the AOHE, oil flows to the Fuel Oil heat Exchanger (FOHE). The FOHE has two functions. The primary function is to decrease the oil temperature and the secondary function is to increase the temperature of the fuel to prevent icing. Both heat exchangers have cold start relief valves, which will bypass the exchangers when the oil pressure is excessive.
For lubrication and cooling purposes, the oil flows from the FOHE to the different users:
- front bearing chamber,
- LP/Intermediate Pressure (IP)/High Pressure (HP) location bearing chamber and internal gearbox,
- HP/IP turbine bearing chamber,
- LP turbine bearing chamber,
- intermediate gearbox assembly,
- gearbox input drive,
- external gearbox and centrifugal breather.

G7508471 - G3NT1T0 - FM70D700000071

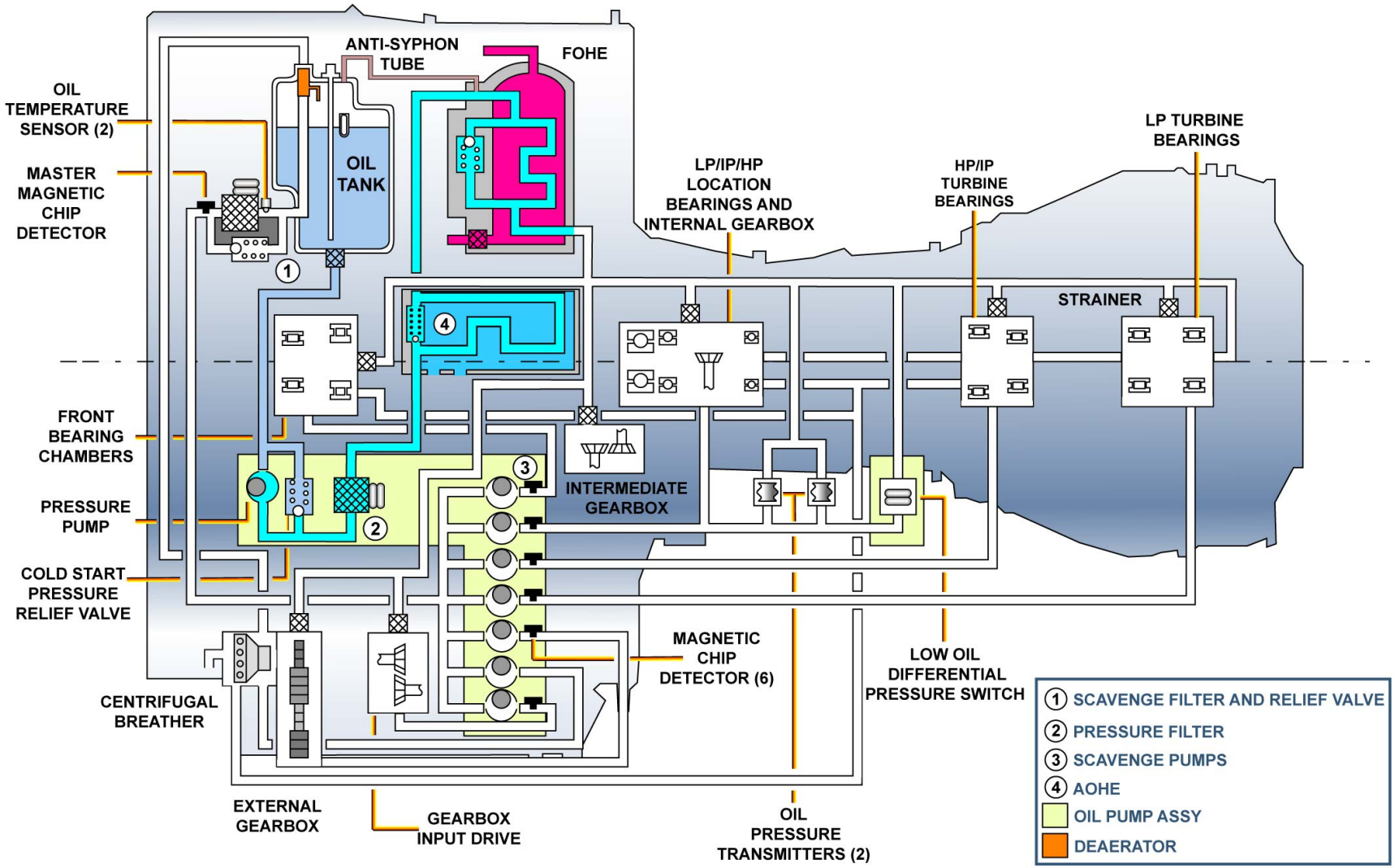

OIL SYSTEM OPERATION - PRESSURE FLOW

G7508471 - G3NT1T0 - FM70D700000071

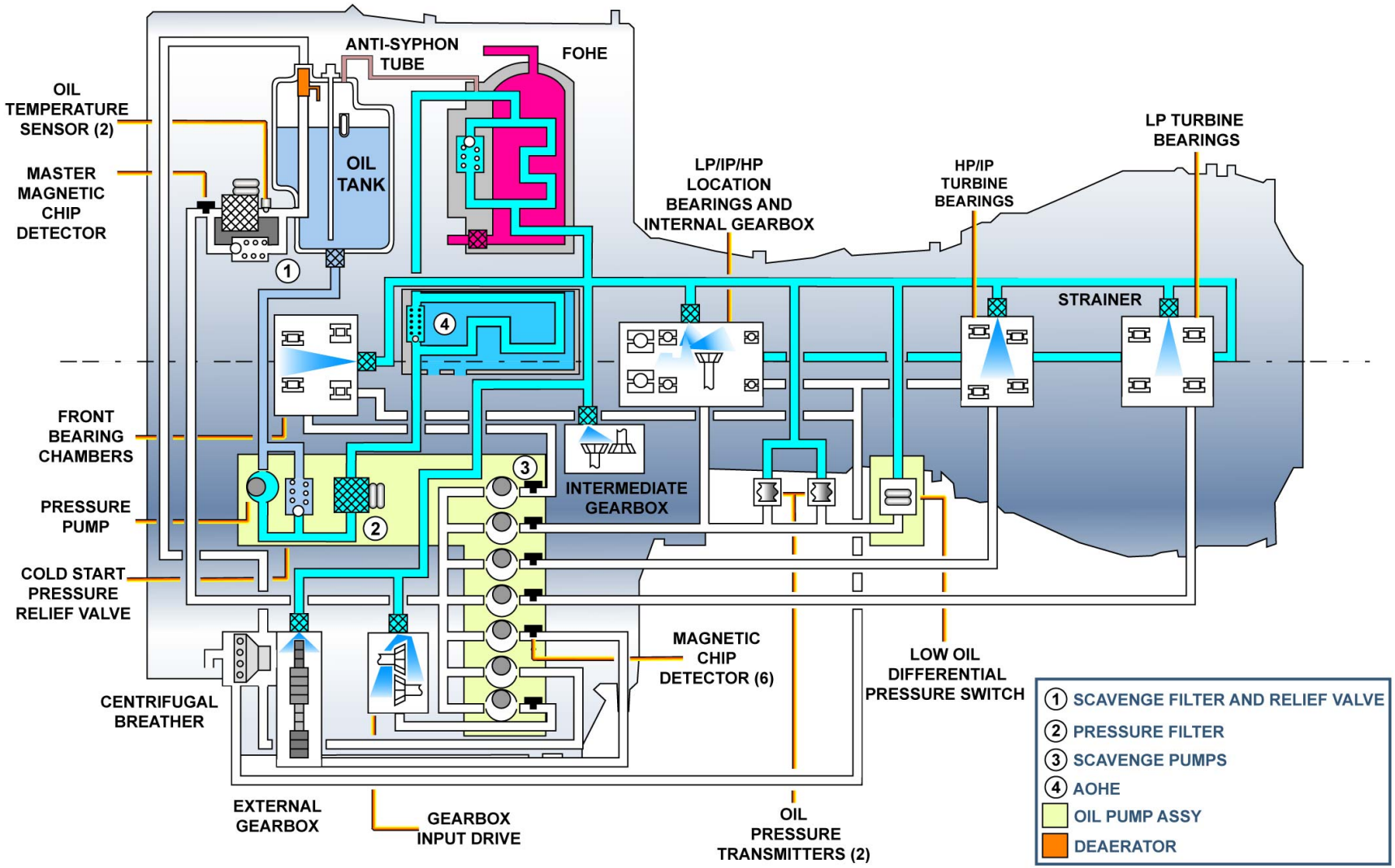

OIL SYSTEM OPERATION - PRESSURE FLOW

G7508471 - G3NT1T0 - FM70D700000071

This Page Intentionally Left Blank

G7508471 - G3NT1T0 - FM70D700000071

OIL SYSTEM D/O (3)

OIL SYSTEM OPERATION (continued)

SCAVENGE FLOW

From the breather and the lubricated bearing locations (except intermediate gearbox), the oil is returned to the tank by seven scavenge pump elements. The oil scavenge pump outlets connect together in a combined scavenge return flow to the scavenge filter through the master magnetic chip detector. The scavenge filter cleans the oil returning to the oil tank. As the oil goes into the tank it flows over a deaerator. The scavenge oil contains (pressurizing) air due to normal leakage across the bearing compartment seals. The deaerator separates any air from the scavenge oil. The separated air is discharged overboard through the centrifugal breather driven by the gearbox.

NOTE: Six magnetic chip detectors can be installed upstream of the pumps to sample return oil and detect any contamination (optional installation).

G7508471 - G3NT1T0 - FM70D700000071

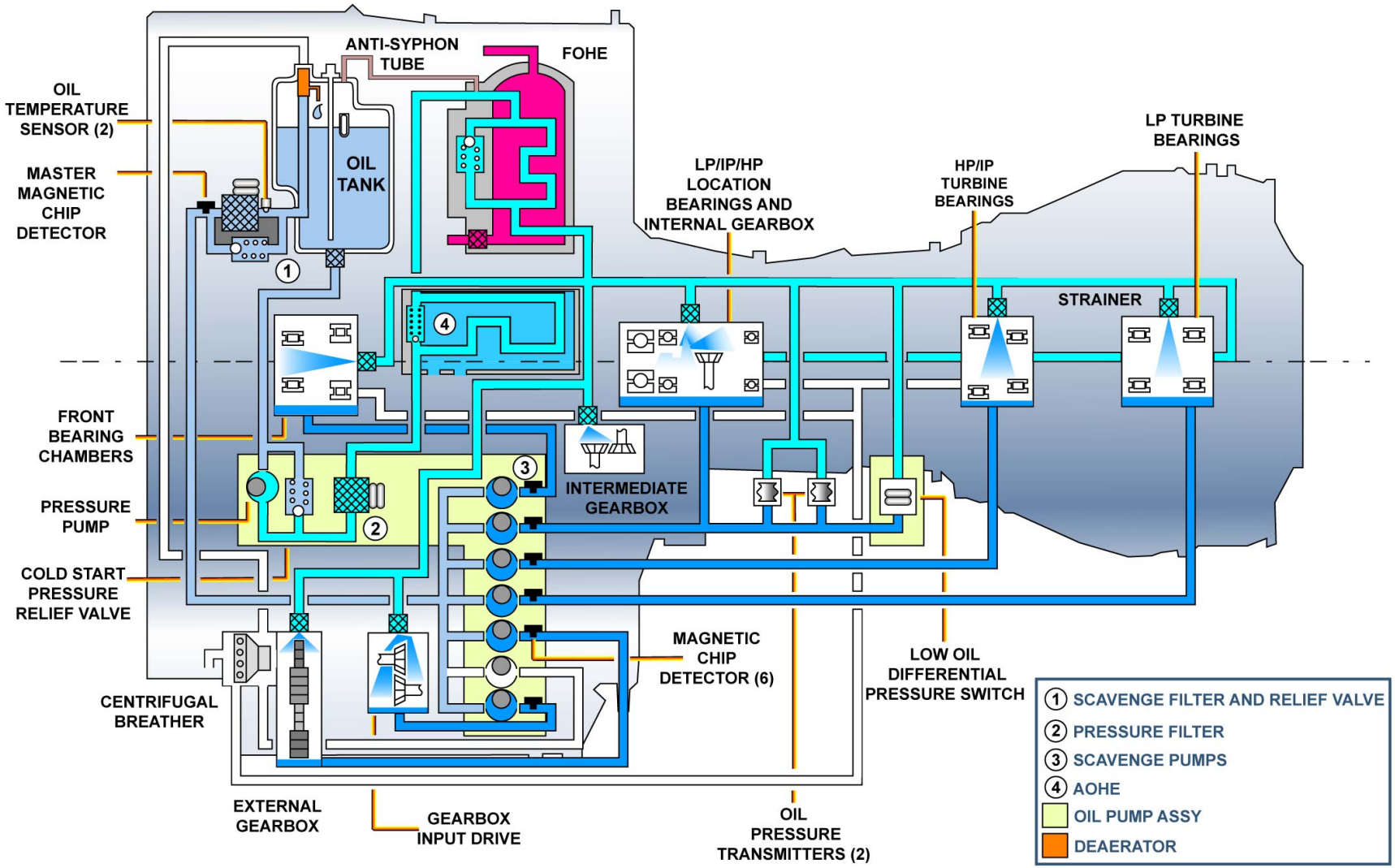

OIL SYSTEM OPERATION - SCAVENGE FLOW

G7508471 - G3NT1T0 - FM70D700000071

OIL SYSTEM D/O (3)

OIL SYSTEM OPERATION (continued)

OIL VENT SYSTEM

To maintain the pressure drop across the seals in order to prevent oil leakage, the main bearing chambers are vented by external tubes to the centrifugal breather, driven by the gearbox. The LP turbine bearings chamber is vented by means of an internal center tube (through the LP shaft) to the HP/IP turbine bearing chamber. The engine centrifugal breather extracts the venting air/oil mixture and separates the oil from the air before directing the air overboard through the breather outlet. The breather also makes sure that any oil droplets remaining in the air from the oil tank de-aerator are separated before discharging. Any oil separated is scavenged from the breather housing back to the oil tank.

G7508471 - G3NT1T0 - FM70D700000071

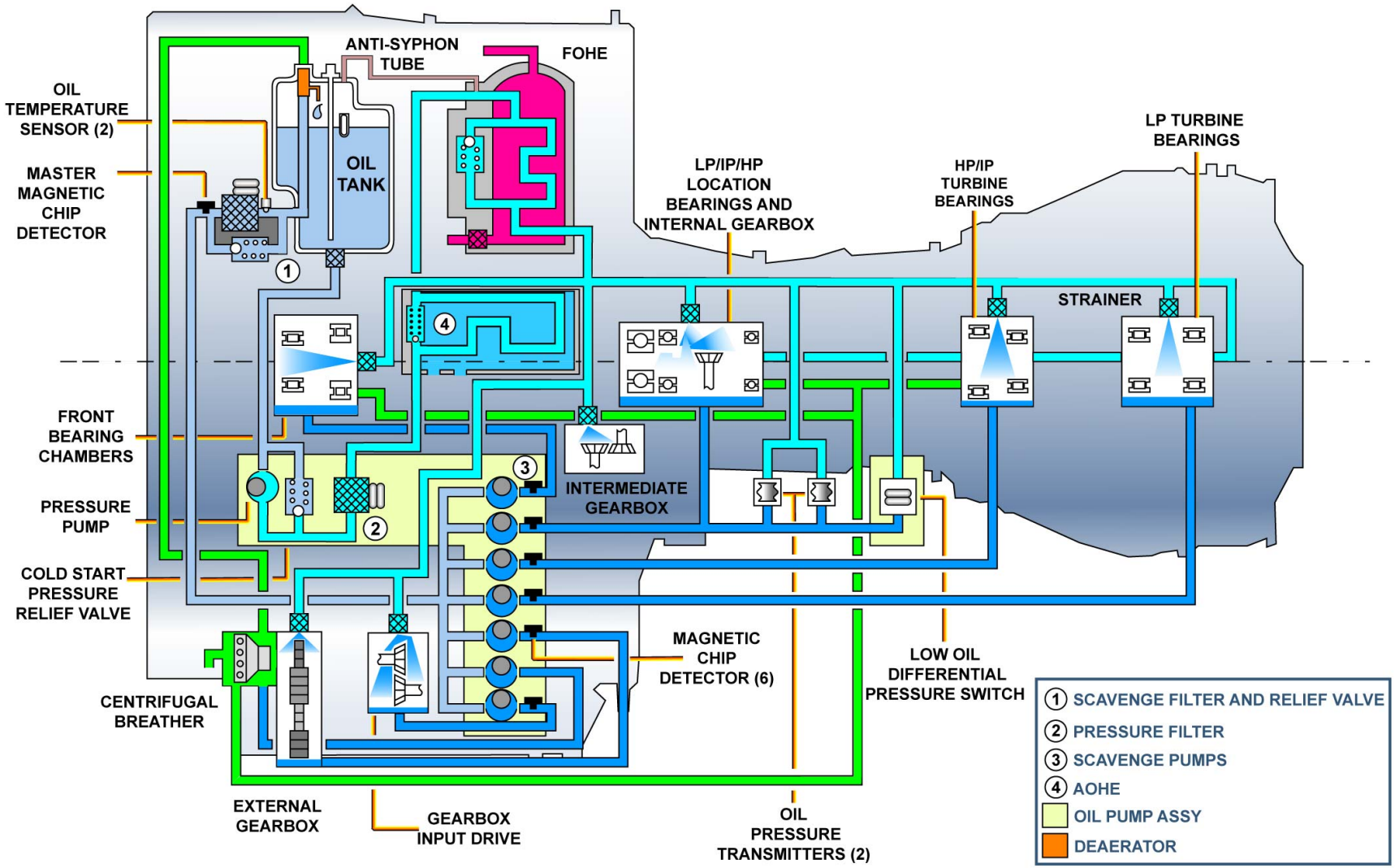

OIL SYSTEM OPERATION - OIL VENT SYSTEM

G7508471 - G3NT1T0 - FM70D700000071

OIL SYSTEM D/O (3)

ENGINE OIL HEAT MANAGEMENT

The AOHE, together with the FOHE, keeps the oil temperature within the specified limits to give the best engine performance. When the FOHE is not able to maintain the oil temperature within the limits (due to low fuel flow through the FOHE at idle operation, for example), fan air is supplied to the AOHE by means of an air modulating valve controlled by the Engine Electronic Controller (EEC). This air modulating valve is actuated by a hydraulic actuator which uses fuel through a servo valve as servo pressure. The EEC uses the oil temperature as the primary control parameter and the Linear Variable Differential Transducer (LVDT) signals as feedback for the AOHE servo valve Torque Motor (TM) control. When the oil temperature is within nominal limits, the EEC sends a signal to the servo valve TM to close the air modulating valve.
In case of failure, the AOHE modulating valve can be deactivated in the open position by means of its locking device located on its upper face.

G7508471 - G3NT1T0 - FM70D700000071

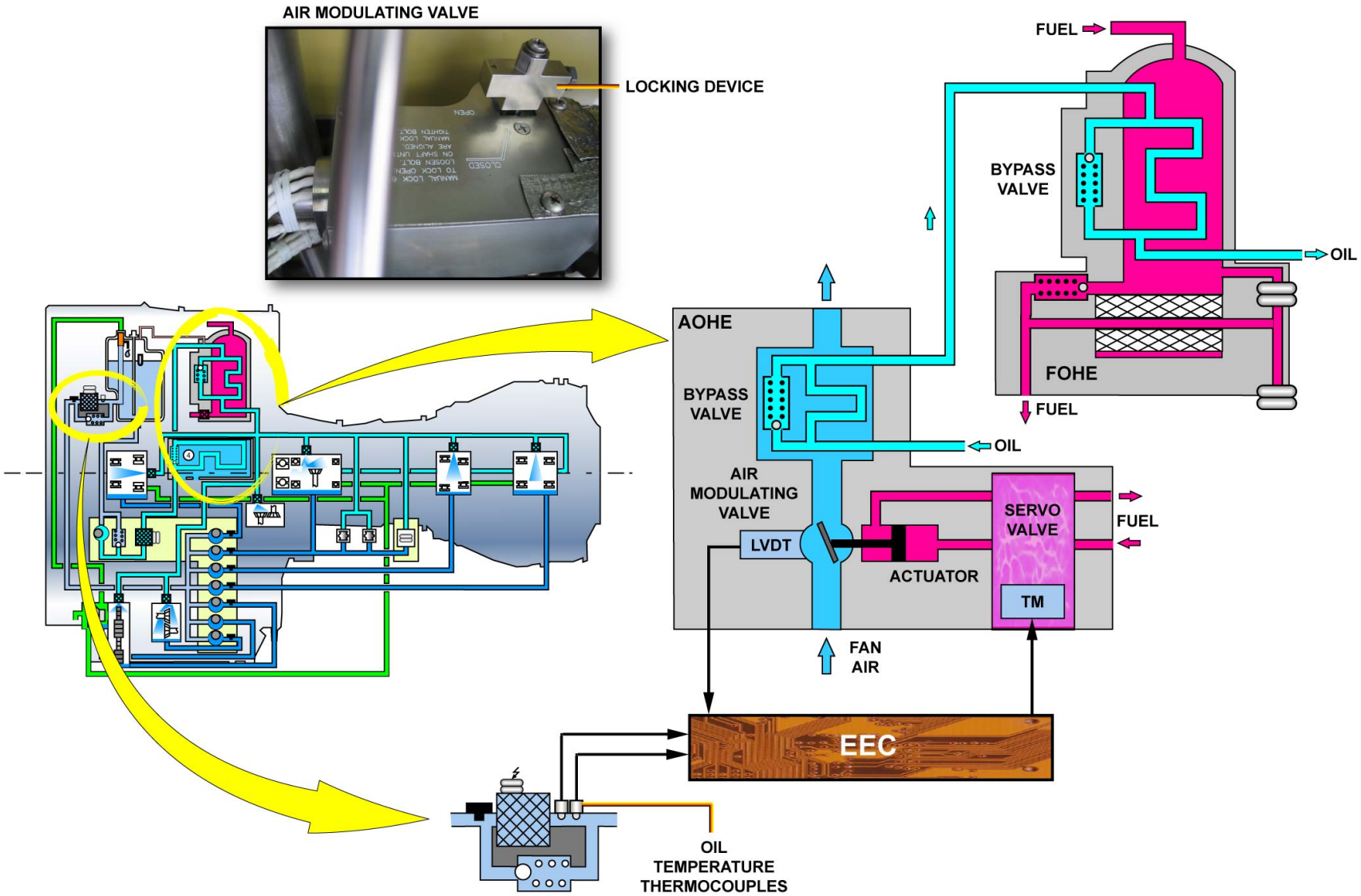

ENGINE OIL HEAT MANAGEMENT

G7508471 - G3NT1T0 - FM70D700000071

OIL SYSTEM D/O (3)

OIL SYSTEM MONITORING

The following oil system parameters are monitored.

OIL LEVEL

A sight glass installed in the side of the tank gives a visual indication of the oil level.

OIL QUANTITY

An oil quantity transmitter sends an analog signal to the EEC, which is in proportion to the quantity of engine oil in the tank. This signal is converted into digital format by the EEC, and as a result, an oil quantity indication is displayed on the SD engine page.

G7508471 - G3NT1T0 - FM70D700000071

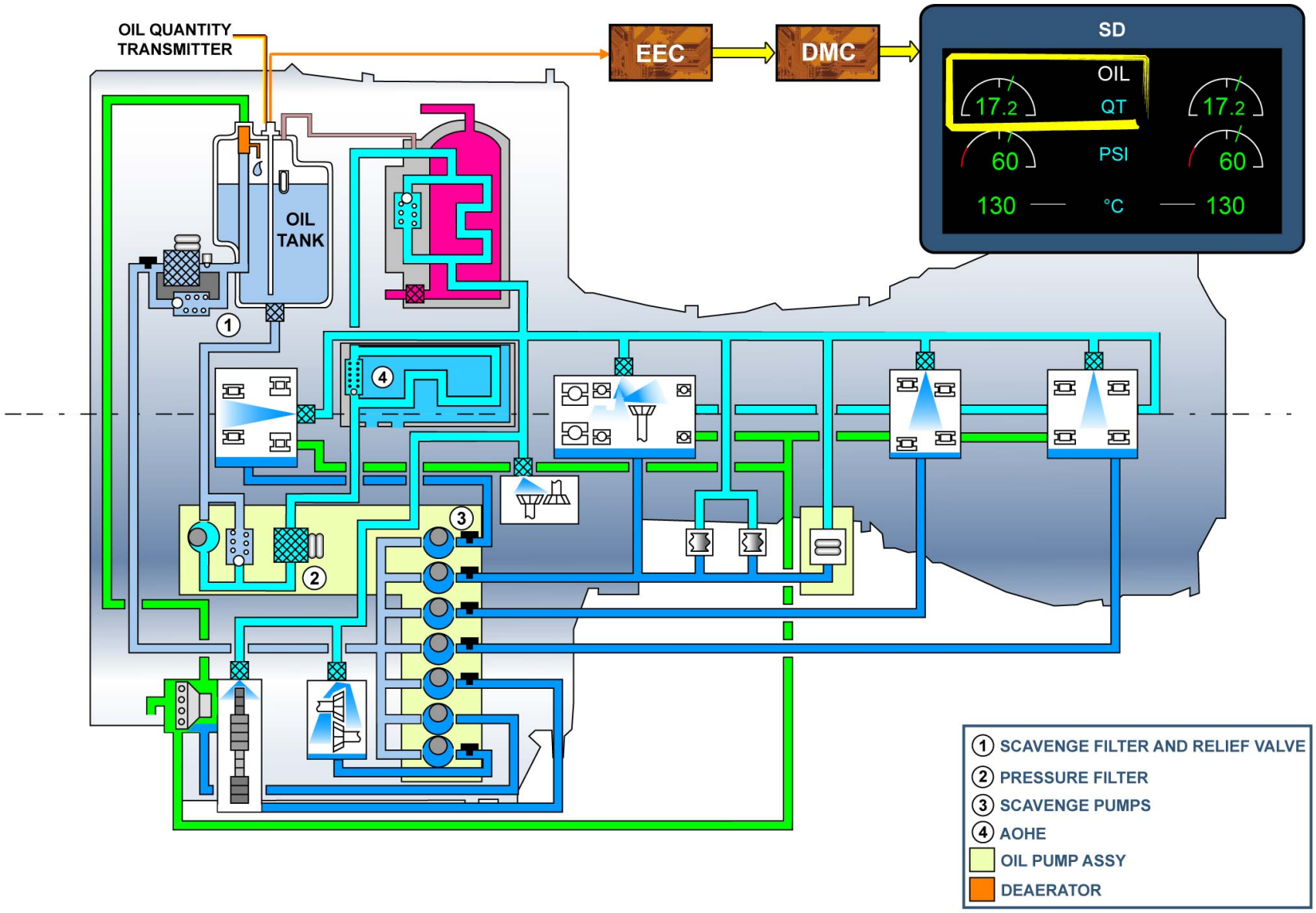

OIL SYSTEM MONITORING - OIL LEVEL & OIL QUANTITY

G7508471 - G3NT1T0 - FM70D700000071

OIL SYSTEM D/O (3)

OIL SYSTEM MONITORING (continued)

OIL PRESSURE

Two pressure transmitters sense the oil pressure between the oil pressure lines and the oil scavenge lines. In proportion to the differential oil pressure, one pressure transmitter sends a signal to EEC channel A and the other sends a signal to EEC channel B. As a result, an oil pressure needle and digital indication are displayed on the System Display (SD) engine page.

G7508471 - G3NT1T0 - FM70D700000071

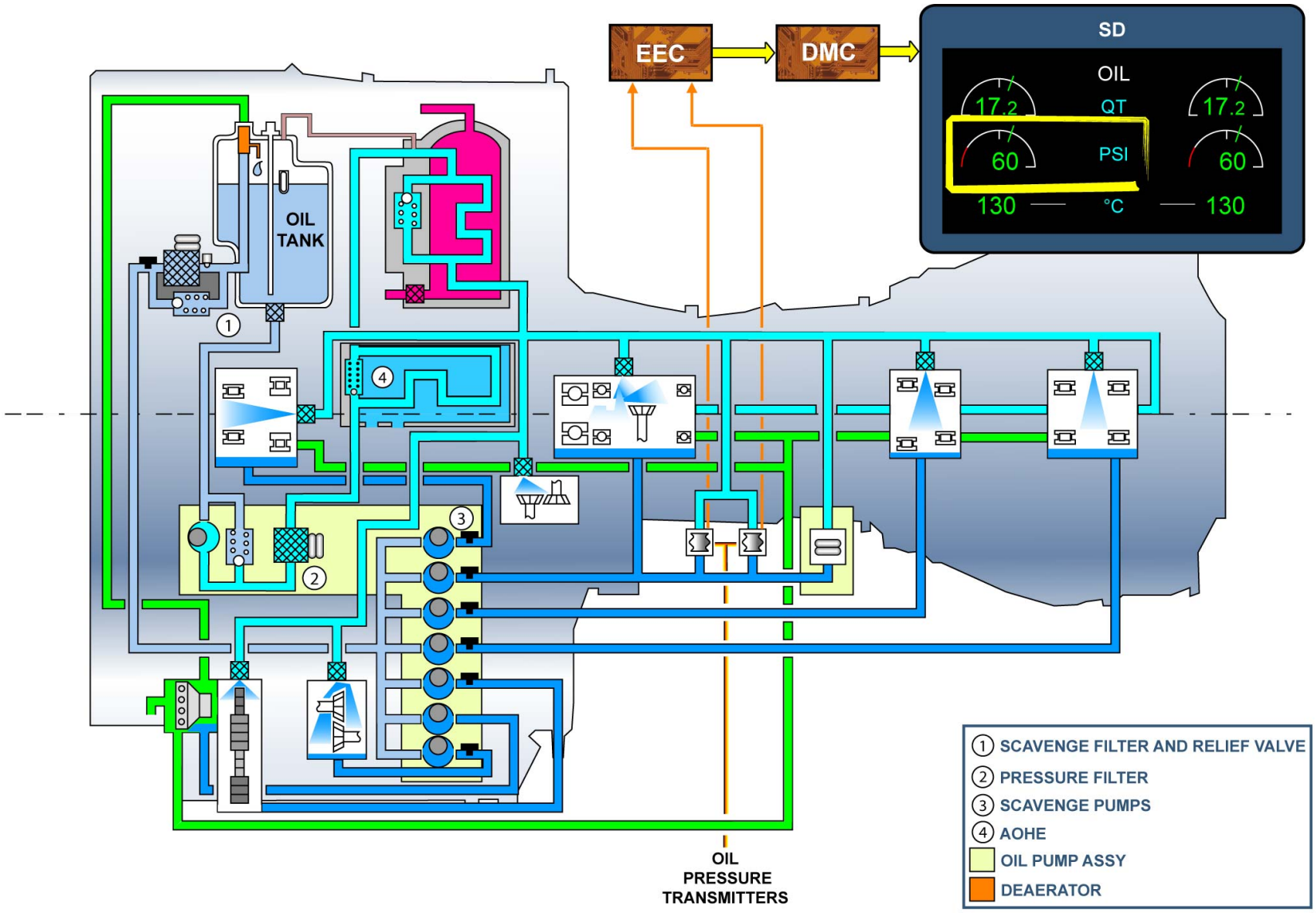

OIL SYSTEM MONITORING - OIL PRESSURE

G7508471 - G3NT1T0 - FM70D700000071

OIL SYSTEM D/O (3)

OIL SYSTEM MONITORING (continued)

LOW OIL PRESSURE DETECTION

A low oil differential pressure switch sends a low oil pressure signal to the Engine Interface and Vibration Monitoring Unit (EIVMU), Flight Warning Computers (FWCs) when the pressure drops below 25 psi. As a result:
- the oil pressure needle and digital indications are displayed in red on the SD engine page,
- the MASTER WARNING flashes and the continuous repetitive chime sounds,
- an ENG OIL LO PR warning is displayed on the Engine and Warning Display (E/WD).

G7508471 - G3NT1T0 - FM70D700000071

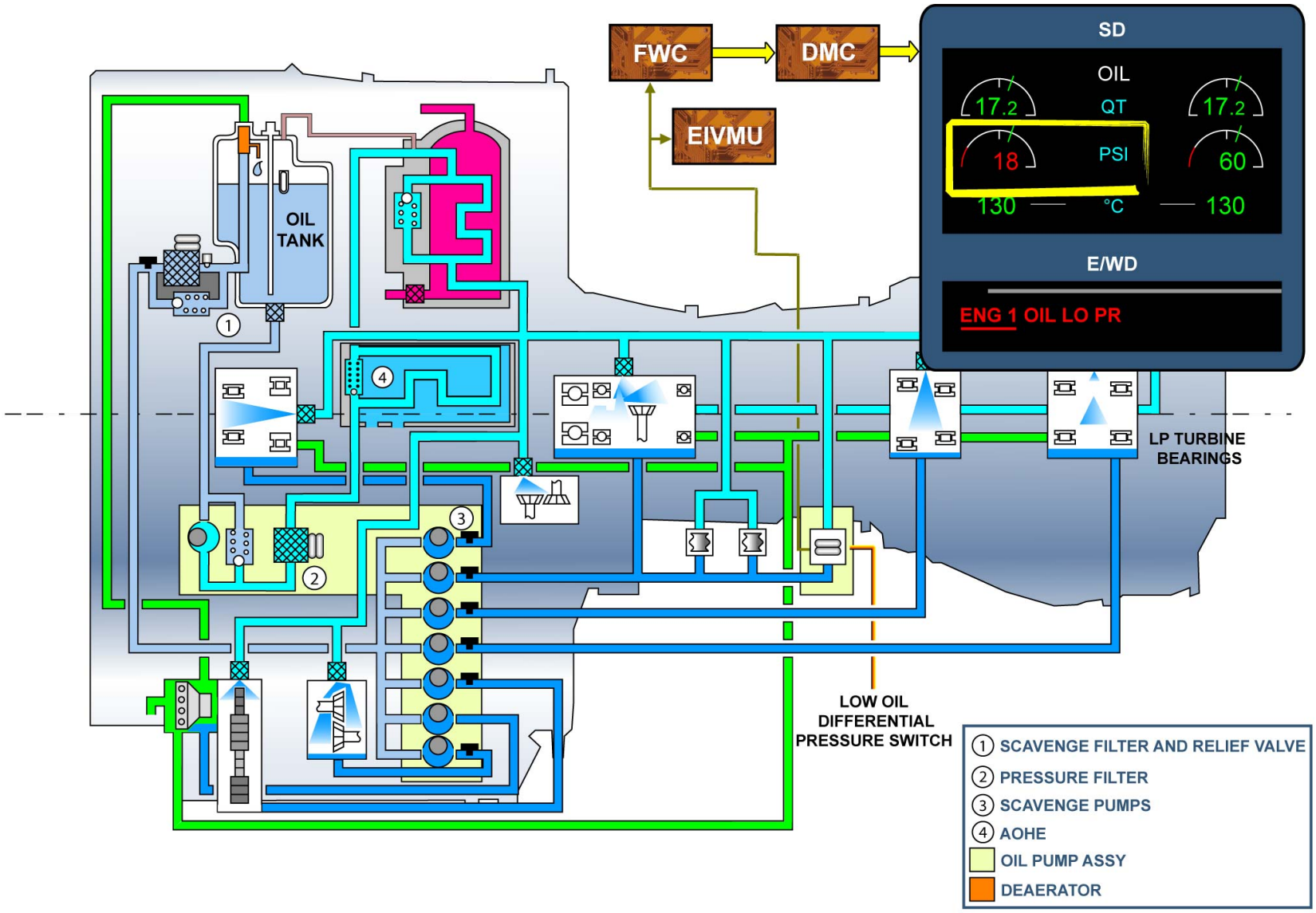

OIL SYSTEM MONITORING - LOW OIL PRESSURE DETECTION

G7508471 - G3NT1T0 - FM70D700000071

OIL SYSTEM D/O (3)

OIL SYSTEM MONITORING (continued)

OIL TEMPERATURE

Two oil temperature thermocouples send analog signals to the EEC. These signals are converted into digital format by the EEC, and as a result, an oil temperature indication is displayed on the SD engine page. If the oil temperature exceeds 190° Celsius, or is lower than 20° Celsius with the engine running on ground:
- the ENG OIL HI TEMP or ENG OIL LO TEMP warning is triggered on the E/WD,
- the MASTER CAUTION comes on and the single chime also sounds.

G7508471 - G3NT1T0 - FM70D700000071

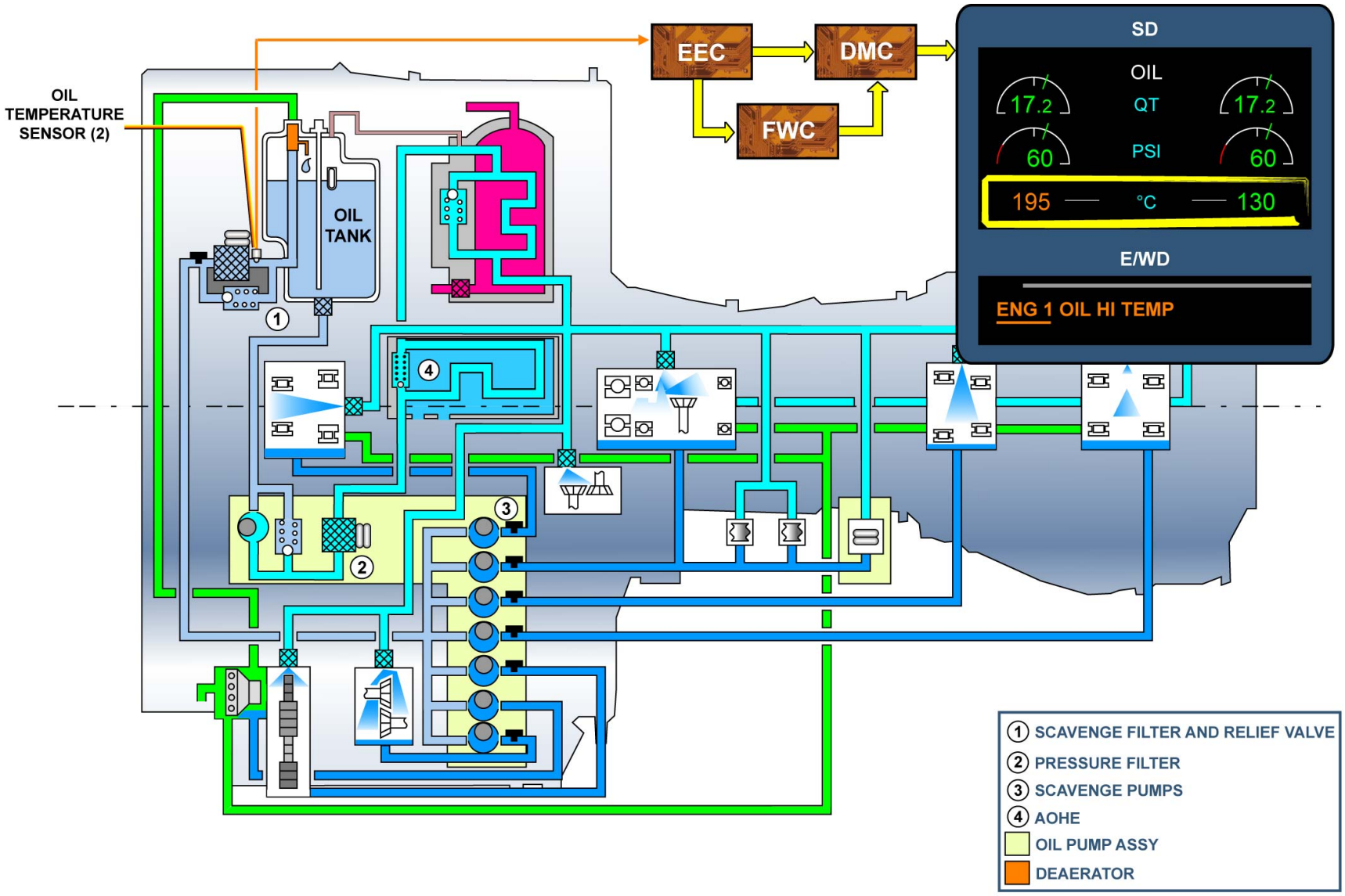

OIL SYSTEM MONITORING - OIL TEMPERATURE

G7508471 - G3NT1T0 - FM70D700000071

OIL SYSTEM D/O (3)

OIL SYSTEM MONITORING (continued)

FILTER CLOG

A pressure filter differential pressure switch and a scavenge filter differential pressure switch send discrete signals to the EEC if the differential pressure across the scavenge oil filter or the pressure oil filter exceeds maximum values. As a result:
- a CLOG indication is displayed on the SD engine page,
- the MASTER CAUTION comes on and the single chime sounds,
- an ENG OIL FILTER CLOG warning is displayed on the E/WD.

NOTE: Note: in the case of an OIL FILTER CLOG warning, the Post Flight Report (PFR) will indicate which filter is clogged (either high pressure or scavenge filter) in a clearly-worded message.

MASTER CHIP DETECTOR

The master magnetic chip detector, when removed and examined, gives an indication of the general condition of the lubricated internal engine components. If metal particles are found on this master magnetic chip detector, a magnetic chip detector must then be installed on each of the 6 return lines for isolation and subsequent analysis.

G7508471 - G3NT1T0 - FM70D700000071

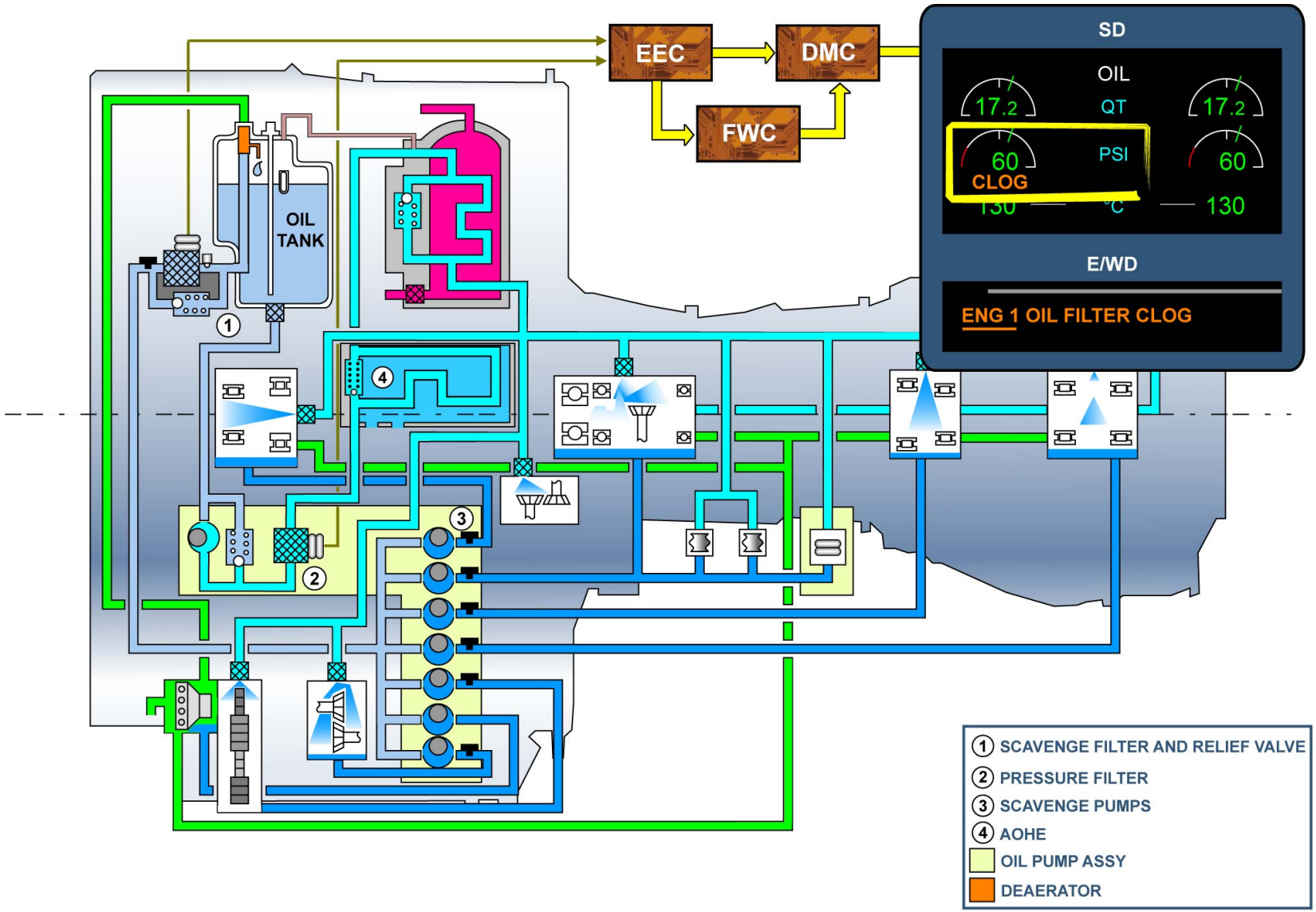

OIL SYSTEM MONITORING - FILTER CLOG & MASTER CHIP DETECTOR

G7508471 - G3NT1T0 - FM70D700000071

OIL SYSTEM D/O (3)

OIL SYSTEM MONITORING (continued)

IDG OIL SERVICING

The Integrated Drive Generator (I.D.G.) is the primary source of AC electrical power supply to the aircraft. Each engine has an I.D.G. mounted on the left hand side rear face of the external gearbox. An oil system, which is an integral part of the I.D.G., lubricates the I.D.G. bearings and keeps it cool. The system is connected to an external Air Cooled Oil Cooler (A.C.O.C.) to keep the oil temperature at a satisfactory level.

The A.C.O.C is a simple air oil heat exchanger, mounted on the lower L.H side of the L.P. compressor case. Hot oil from the I.D.G flows through the matrix, where it is cooled by L.P. compressor air, before returning to the I.D.G There is a pressure relief valve (by-pass) between the oil inlet and outlet connections. If the oil is cold it will not flow easily through the matrix therefore the valve will open and the oil bypasses the A.C.O.C.

G7508471 - G3NT1T0 - FM70D700000071

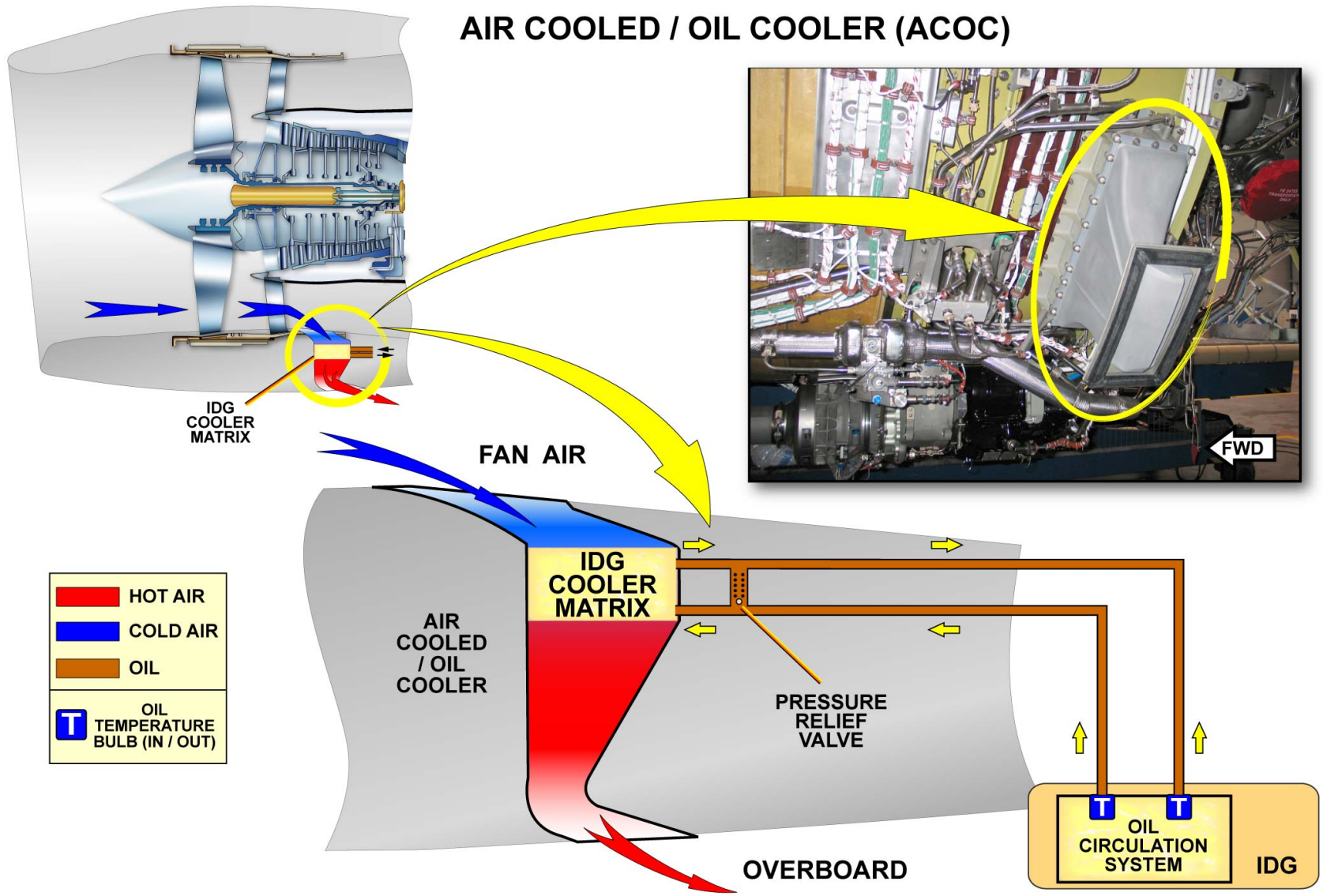

OIL SYSTEM MONITORING - IDG OIL SERVICING

G7508471 - G3NT1T0 - FM70D700000071

POWER PLANT SYSTEM BASE MAINTENANCE (3)

INTRODUCTION

This module will present one servicing procedure and four maintenance tasks, which can be done on the engine. The procedure and the tasks are:
- drain and refill the starter oil,
- turn the engine High Pressure (HP) system,
- turn the engine Intermediate Pressure (IP) system,
- manually open and close the thrust reverser pivoting doors,
- removal of the LP compressor blades and dampers.

WARNING: when preparing and working with power plant components it is important to follow the proper safety practices. Do not drop engine oil on your skin, oil is poisonous. Protection with gloves is required. If the engine has to be operated during maintenance task, obey the safety precaution to avoid severe injury. Never stand near the air intake, the suction can cause severe injury.
to avoid burn injury, start working on parts one hour after engine shutdown.

G7508471 - G3NT1T0 - FM70Y200000071

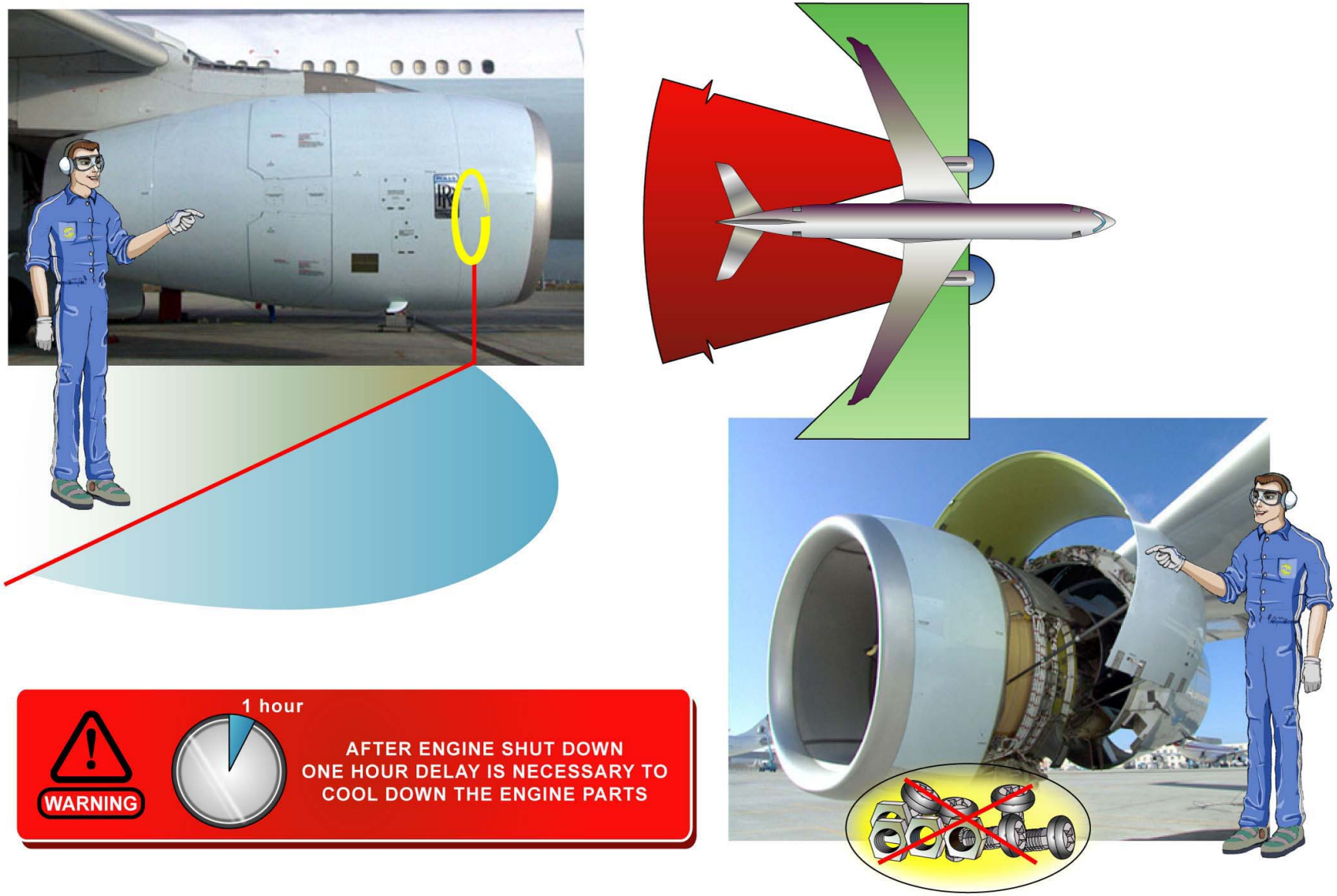

INTRODUCTION

POWER PLANT SYSTEM BASE MAINTENANCE (3)

DRAIN AND REFILL THE STARTER OIL

Open the fan cowls to gain the access to the starter (Task 71-13-00-010-805).
Put a 1 US Gallon. container in position to catch the oil.
Cut the lockwire and remove the drain plug to drain all the oil. Remove and discard the seal ring.

NOTE: Note: the magnetic chip detector is installed through the center of the drain plug.

Install the drain plug with a new seal. Torque at specified value and secure with lockwire.
Cut the lockwire and remove the oil fill and the oil level overflow plugs. Remove and discard the seal rings.
Add oil (type OMAT 1011) to the starter through the oil fill port until oil drips from the oil level overflow hole.
Clean the oil from the external surfaces of the starter and install new seals to both plugs before re-fitting.
Torque to specified value and secure with lockwire.
Look at the oil level sight glass, the oil level must be above the add mark.
If the oil is not above the add mark the pneumatic starter must be replaced.
Close up.

G7508471 - G3NT1T0 - FM70Y200000071

Drain and refill the starter oil

...
Job set-up
...

- **Open the fan cowls to gain access to starter.**

...
Procedure
...

- **Drain the oil from the pneumatic starter.**
- **Fill the pneumatic starter.**

...
Close-up
...

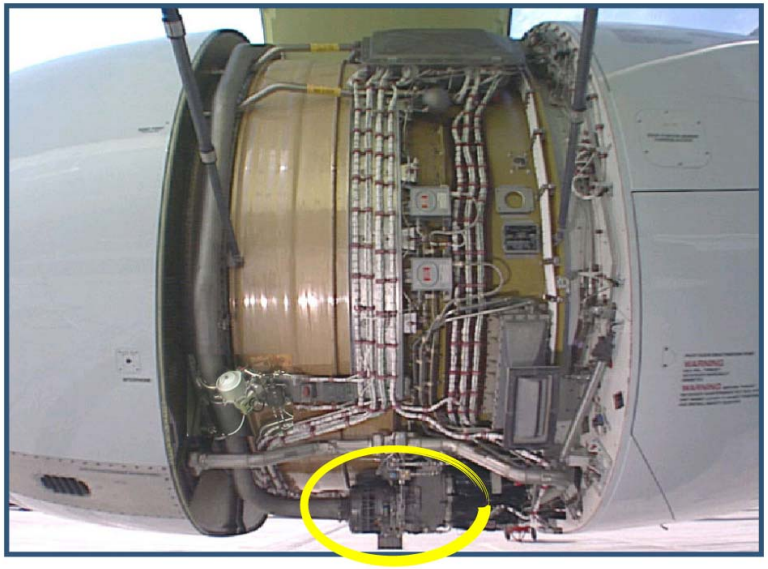

DRAIN AND REFILL THE STARTER OIL

G7508471 - G3NT1T0 - FM70Y200000071

Drain and refill the starter oil

...
Job set-up
...

Open the fan cowls to gain access to starter.

...
Procedure
...

Drain the oil from the pneumatic starter.
Put a 1 US gal container in position to catch the oil.

Cut the lock wire and remove the drain plug to drain all the oil.
Note: The magnetic chip detector is installed through the center of the drain plug.

Install the Drain Plug with a new seal. Torque at specified value and secure with lockwire.

Fill the pneumatic starter.

...
Close-up
...

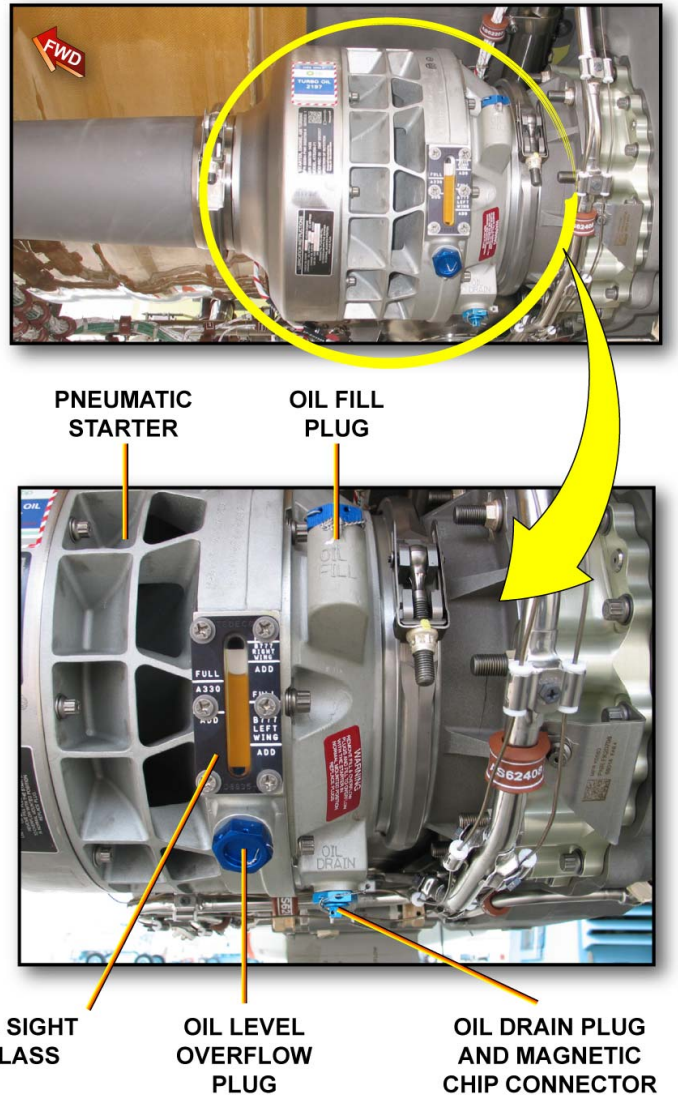

DRAIN AND REFILL THE STARTER OIL

Drain and refill the starter oil

...
Job set-up
...

- ✓ **Open the fan cowls to gain access to starter.**

...
Procedure
...

- ✓ **Drain the oil from the pneumatic starter.**

- ⇨ **Fill the pneumatic starter.**
  Cut the lockwire and remove the oil fill and the oil level overflow plugs.

  Add oil to the starter throught the oil fill port until oil drips from the oil level overflow hole.

  Clean the oil from the external surfaces of starter and install new seals to both plugs before re-fitting.

  Torque to specific value and secure with lockwire.

...
Close-up
...

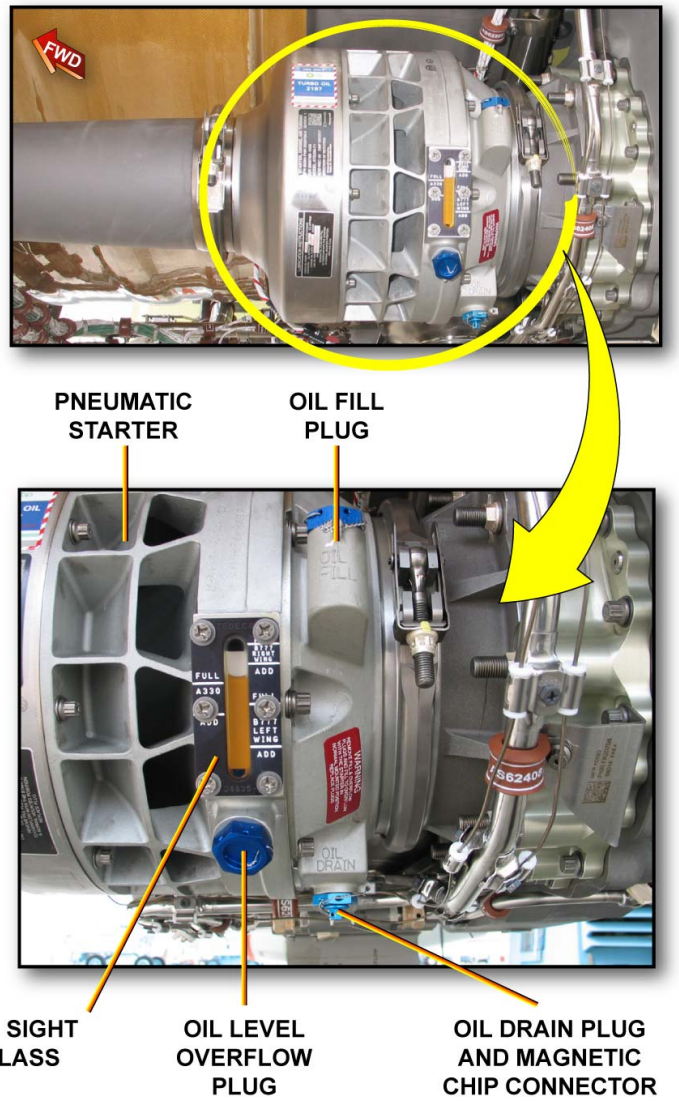

DRAIN AND REFILL THE STARTER OIL

Drain and refill the starter oil

...
✓ Job set-up
...

✓ Open the fan cowls to gain access to starter.

...
✓ Procedure
...

✓ Drain the oil from the pneumatic starter.

✓ Fill the pneumatic starter.

...
✓ Close-up
...

✓ TASK COMPLETED

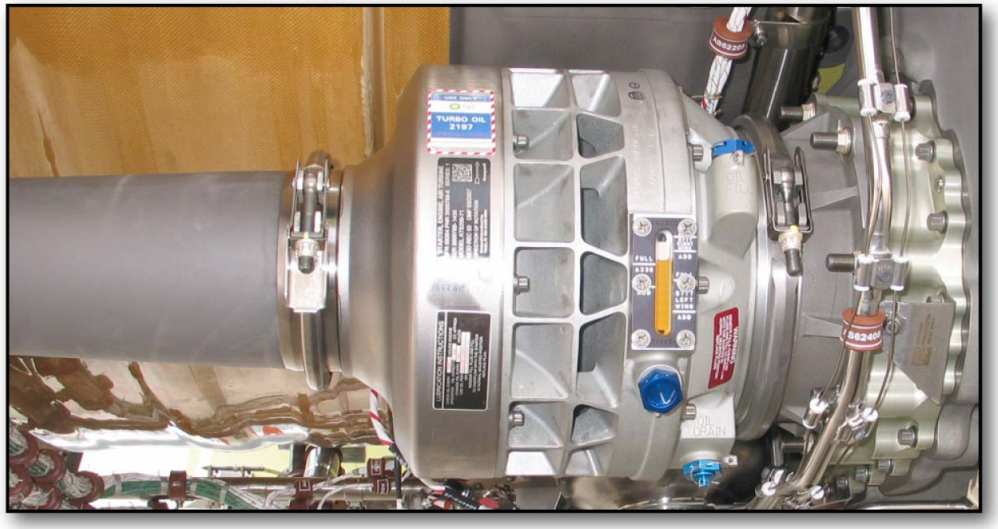

DRAIN AND REFILL THE STARTER OIL

This Page Intentionally Left Blank

G7508471 - G3NT1T0 - FM70Y200000071

POWER PLANT SYSTEM BASE MAINTENANCE (3)

TURN THE ENGINE HIGH PRESSURE SYSTEM

This task gives you the procedure to turn the HP system. A hand turning tool is installed through the breather housing to fit the splines in the gearbox.
Open the fan cowl doors to gain access to breather assembly on the front side of the gearbox (Task 71-13-00-010-805).
Remove the breather cover.
Remove and discard the seal ring.
Carefully install the rotate HP system adapter tool (HU40025) through the breather housing until its flange is against the breather housing. Make sure that the turning tool splines are correctly engaged with the splines in the external gearbox.
Use the bolts and washers from the cover plate to attach the adapter tool to the breather housing and turn the HP rotor as necessary.

NOTE: Note: the maximum torque to be applied with the HP turning tool is 5.96 m.daN (44 lbf.ft).

Carefully remove the adapter from the breather housing.
Install a new seal ring on the breather cover.
Put the breather cover into position on the breather housing and install the bolts and the washers.
Torque the bolts to specified value.
Close the fan cowls.

G7508471 - G3NT1T0 - FM70Y200000071

Turn the engine high pressure system

...
✓ Job set-up
...

✓ Open the fan cowls to again access to breather assembly.

...
Procedure
...

⇨ Remove the breather cover.

Remove and discard the seal ring.

Carefully install the rotate HP system adapter tool (HU40025).

...
Close-up
...

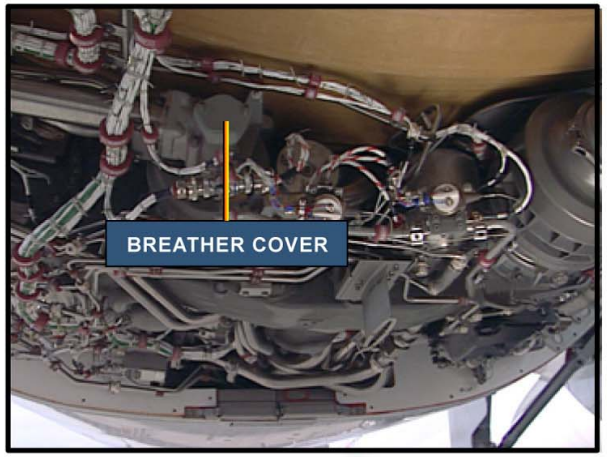

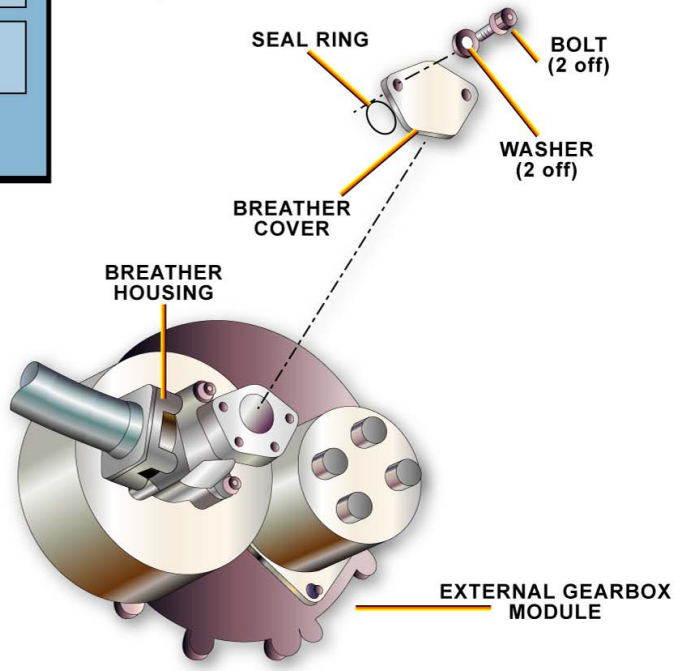

TURN THE ENGINE HIGH PRESSURE SYSTEM

Turn the engine high pressure system

...

Job set-up

...

- **Open the fan cowls to again access to breather assembly.**

...

Procedure

...

- **Remove the breather cover.**
- **Remove and discard the seal ring.**
- **Carefully install the rotate HP system adapter tool (HU40025).**

  Carefully install the rotate HP system adapter tool through the breather housing until its flange is against the breather housing. Make sure that the turning tool splines are correctly engaged with the splines in the external gearbox.

  Use the bolts and washers from the cover plate to attach the adapter tool to the breather housing and turn the HP rotor as necessary.

...

Close-up

...

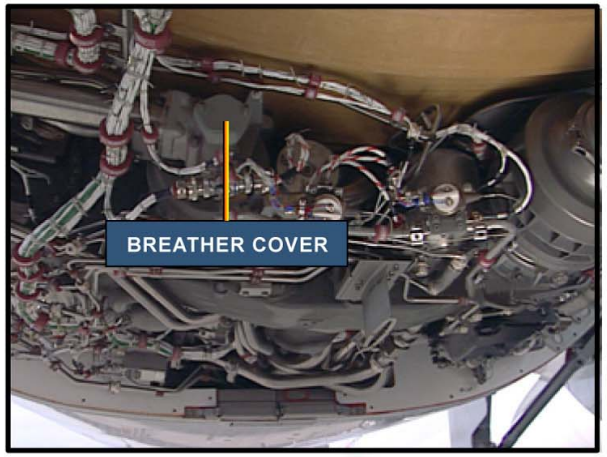

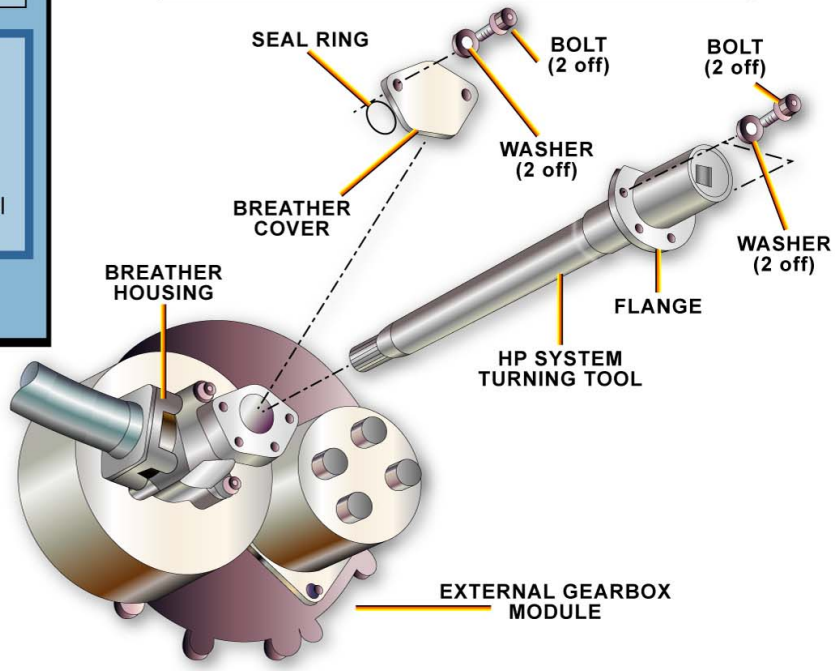

TURN THE ENGINE HIGH PRESSURE SYSTEM

Turn the engine high pressure system

...
✓ Job set-up
...

✓ Open the fan cowls to again access to breather assembly.

...
✓ Procedure
...

✓ Remove the breather cover.

✓ Remove and discard the seal ring.

✓ Carefully install the rotate HP system adapter tool (HU40025).

...
✓ Close-up
...

✓ TASK COMPLETED

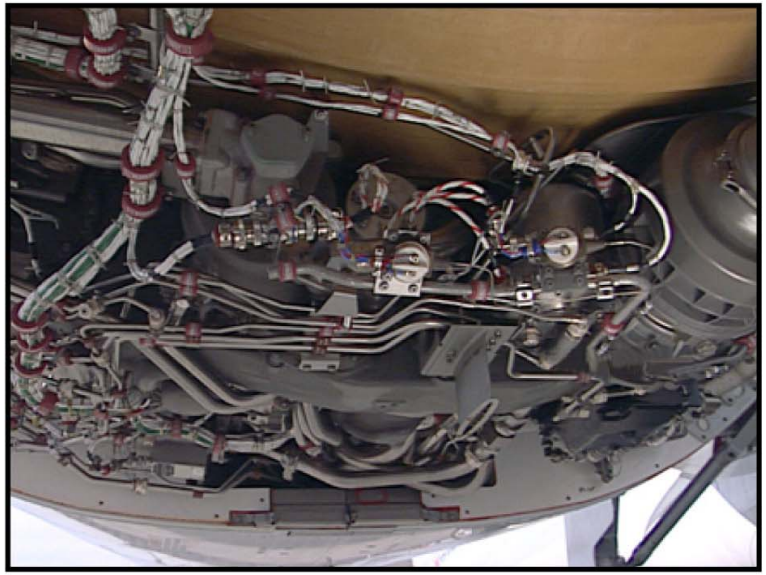

TURN THE ENGINE HIGH PRESSURE SYSTEM

G7508471 - G3NT1T0 - FM70Y200000071

POWER PLANT SYSTEM BASE MAINTENANCE (3)

TURN THE ENGINE INTERMEDIATE PRESSURE SYSTEM

This task gives you the procedure to turn the engine IP system. The Variable Inlet Guide Vanes (VIGVs) must be fully open before the IP system turning tool is installed.
Open the fan cowl doors (Task 71-13-00-010-805).
Deactivate the thrust reverser (Task 78-31-00-040-815).
Open the thrust reverser cowl doors (Task 78-30-00-010-803).
Remove the right center and the right bottom gas generator fairings to get access to the VIGVs actuator(Task 72-22-41-000-801).
Attach a spanner to the spanner flats on the VIGV bellcrank and pull the actuator rams to the retracted position.
When the actuator rams are retracted to the high speed rigging position the VIGVs are open.

NOTE: Note: make sure the container is in position under the fuel tube as more fuel will possibly drain when the actuator rams are retracted.

Remove the spanner from the VIGV bellcranck.
Install the gas generator fairings.
Install the Common Nozzle Assembly (CNA) rear cover (FK24273).

WARNING: you have to make sure that applicable covers are installed at the rear of the engine. The air entering into the engine can introduce LP compressor rotation and cause injury.

Put the mat air intake cowl (HU55142) into position in the air intake cowl. Make sure that the red warning flag of the mat can be seen from the exterior of the aircraft.
Put the IP system turning tool (HU38122-3) through the LP compressor blades, Inlet Guide Vanes (IGVs) and VIGVs.
Use the turning tool to turn the IP system as necessary. Carefully remove the turning tool.
Attach the control rods to the rams (Left and right VSV actuators)
Close the thrust reverser cowl doors.
Re-activate the thrust reverser.
Remove the mat air intake cowl and the CNA rear cover.
Do a test of the VSV system (Task 75-33-00-740-801).
Close the fan cowl doors.

G7508471 - G3NT1T0 - FM70Y200000071

Turn the engine intermediate pressure system

...
Job set-up
...

- ✓ Open the fan cowls.
- ✓ Deactivate the thrust reverser.
- ⇨ Open the thrust reverser cowl doors.
- Manually open the VIGVs.
- Install the CNA rear cover.
- Put the air intake cowl mat.

...
Procedure
...

- Turn the IP system.
- Connect the VSV actuators.
- Close the thrust reverser cowl doors.
- Make the thrust reverser serviceable.
- Remove the air intake cowl mat and the CNA rear cover.
- Do a test of the VSV system.

...
Close-up
...

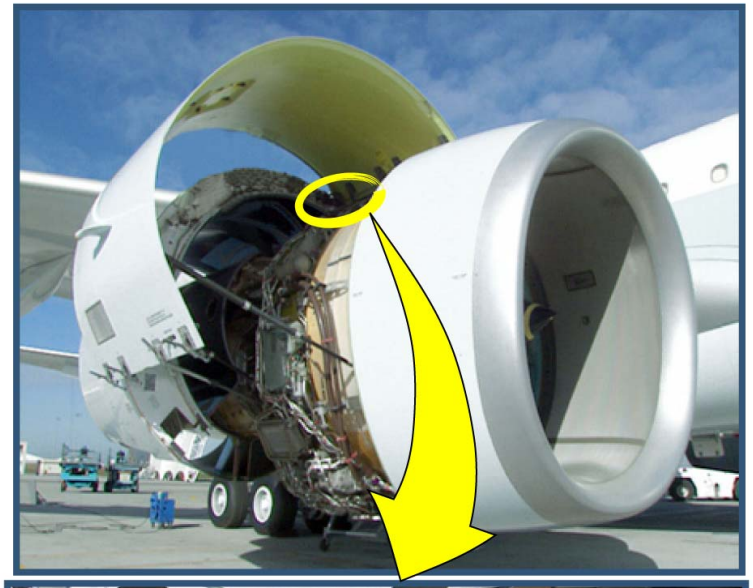

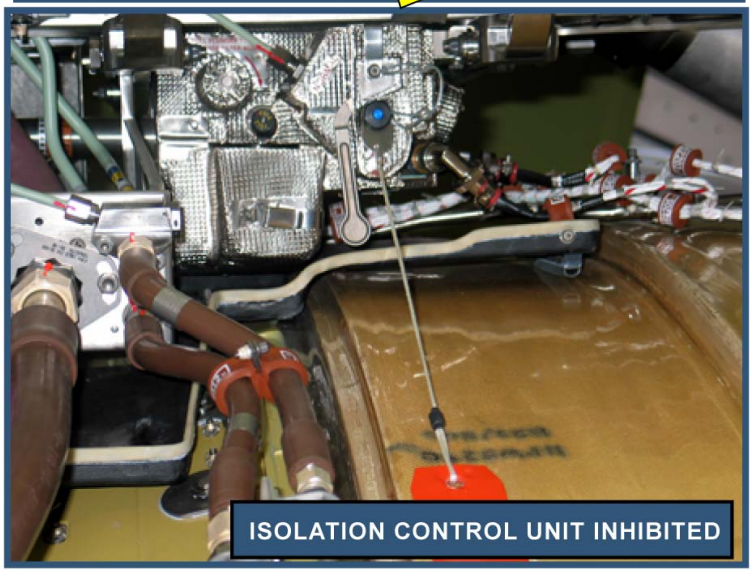

TURN THE ENGINE INTERMEDIATE PRESSURE SYSTEM

G7508471 - G3NT1T0 - FM70Y200000071

Turn the engine intermediate pressure system

...

Job set-up

...

- ✓ **Open the fan cowls.**
- ✓ **Deactivate the thrust reverser.**
- ✓ **Open the thrust reverser cowl doors.**
- ⇨ **Manually open the VIGVs.**
  Remove the right center and right bottom gas generator fairings.

  Attach a spanner to the spanner flats on the VIGV bellcrank and pull the actuator rams to the retracted position.

  Remove the spanner.

  Install the gas generator fairings.
- **Install the CNA rear cover.**
- **Put the air intake cowl mat.**

...

Procedure

...

- **Turn the IP system.**
- **Connect the VSV actuators.**
- **Close the thrust reverser cowl doors.**
- **Make the thrust reverser serviceable.**
- **Remove the air intake cowl mat and the CNA rear cover.**
- **Do a test of the VSV system.**

...

Close-up

...

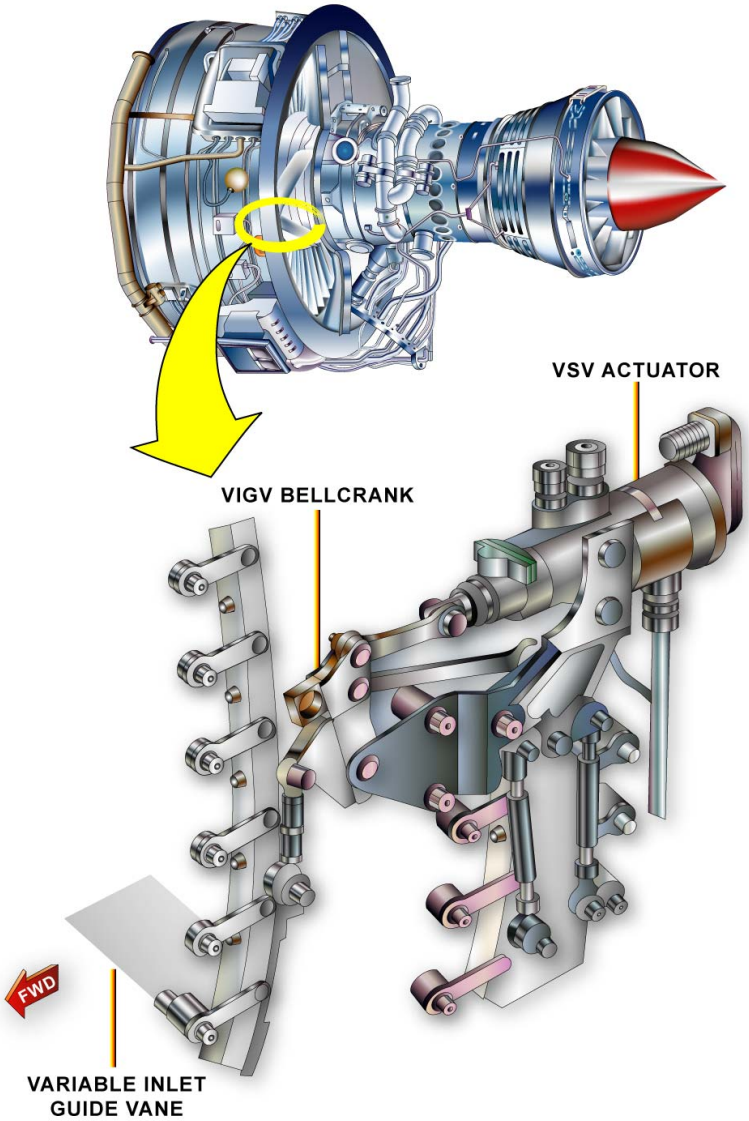

TURN THE ENGINE INTERMEDIATE PRESSURE SYSTEM

G7508471 - G3NT1T0 - FM70Y200000071

Turn the engine intermediate pressure system

...

Job set-up

...

- ✓ Open the fan cowls.
- ✓ Deactivate the thrust reverser.
- ✓ Open the thrust reverser cowl doors.
- ✓ Drain the HP fuel system.
- ✓ Manually open the VIGVs.
- ✓ Install the CNA rear cover.
- ✓ Put the air intake cowl mat.

...

Procedure

...

Turn the IP system.

Put the IP system turning tool through the LP compressor blades, inlet guide vanes and variable inlet guide vanes.

Use the turning tool to turn the IP system as necessary.

Carefully remove the turning tool.

- Turn the IP system.
- Connect the VSV actuators.
- Close the thrust reverser cowl doors.
- Make the thrust reverser serviceable.
- Remove the air intake cowl mat and the CNA rear cover.
- Do a test of the VSV system.

...

Close-up

...

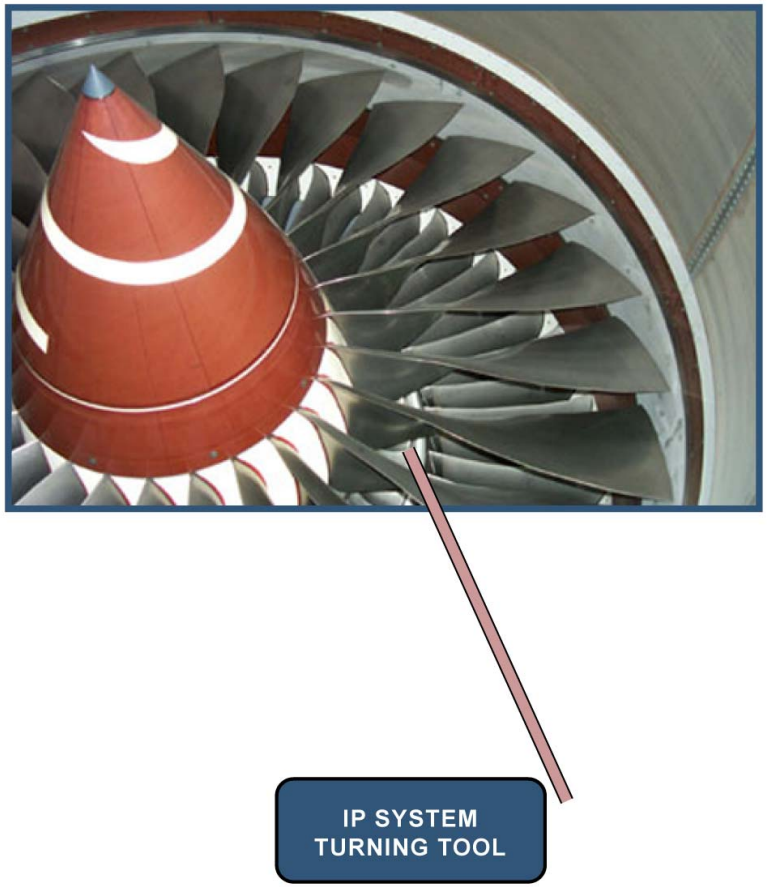

TURN THE ENGINE INTERMEDIATE PRESSURE SYSTEM

G7508471 - G3NT1T0 - FM70Y200000071

Turn the engine intermediate pressure system

...
Job set-up
...

- Open the fan cowls.
- Deactivate the thrust reverser.
- Open the thrust reverser cowl doors.
- Manually open the VIGVs.
- Install the CNA rear cover.
- Put the air intake cowl mat.

...
Procedure
...

- Turn the IP system.
- Connect the VSV actuators.
- Close the thrust reverser cowl doors.
- Make the thrust reverser serviceable.
- Remove the air intake cowl mat and the CNA rear cover.
- Do a test of the VSV system.

...
Close-up
...

TASK COMPLETED

TURN THE ENGINE INTERMEDIATE PRESSURE SYSTEM

This Page Intentionally Left Blank

G7508471 - G3NT1T0 - FM70Y200000071

POWER PLANT SYSTEM BASE MAINTENANCE (3)

MANUALLY OPEN/CLOSE THE PIVOTING DOORS

This task gives you the procedure to manually open and close the pivoting doors.
Open the fan cowls (Task 71-13-00-010-805).
Make the thrust reverser unserviceable for maintenance (Task 78-31-00-040-805).
Remove the tertiary lock access panel.
Use a standard spanner 0.3125 inches to turn the release mechanism of:
- the primary lock,
- the actuator (secondary lock) and,
- the tertiary lock

Hold the primary lock and the tertiary lock in the unlock position.
Open the pivoting door, use hand pressure on the front and rear edges of the door.
Release the primary lock and the tertiary lock.
Install the collar hold open pivot door (HU87132) on the actuator.
To close the pivoting door, the following sequence must be applied.
Remove the collar hold open pivot door from the actuator.
Turn the release mechanism on the primary lock and the tertiary lock counterclockwise to the unlock position. Hold them in this position.
Use hand pressure on the front and rear edges of the door to close the pivoting door.
Install the inhibition bolt between the front frame and the door (Task 78-31-00-040-806).
Tighten the inhibition bolt until the primary lock and the tertiary lock correctly engage their related door pins when released.
Remove the inhibition bolt and install it on the front frame (Task 78-31-00-440-806).
Make sure that the work area is clean and clear of tools and other items.
Install the tertiary lock access panel, make the thrust reverser serviceable and close the fan cowl doors.

G7508471 - G3NT1T0 - FM70Y200000071

Manually open/close the pivoting doors

...
✓ Job set-up
...

✓ Open the fan cowls.

✓ Make the thrust reverser unserviceable for maintenance.

➡ Remove the tertiary lock access panel.

...
Procedure
...

Manually open the pivoting doors.

Manually close the pivoting doors.

...
Close-up
...

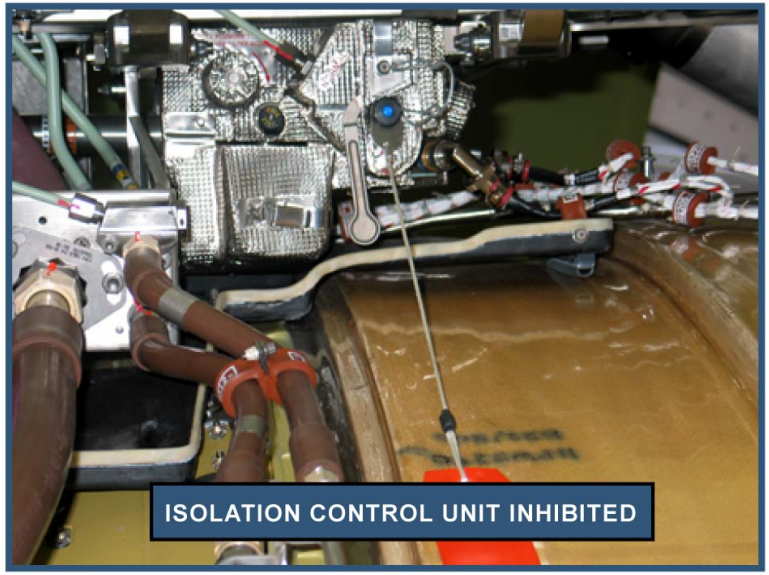

MANUALLY OPEN/CLOSE THE PIVOTING DOORS

G7508471 - G3NT1T0 - FM70Y200000071

Manually open/close the pivoting doors

...
Job set-up
...

- Open the fan cowls.
- Make the thrust reverser unserviceable for maintenance.
- Remove the tertiary lock access panel.

...
Procedure
...

Manually open the pivoting doors.
- Use a spanner 0.3125 inches to unlock the primary, secondary and tertiary lock.
- Open the pivoting door, use hand pressure on the front and rear edges of the door. Release the primary lock and the tertiary lock.

Install the collar hold open pivot door on the actuator.

Manually close the pivoting doors.

...
Close-up
...

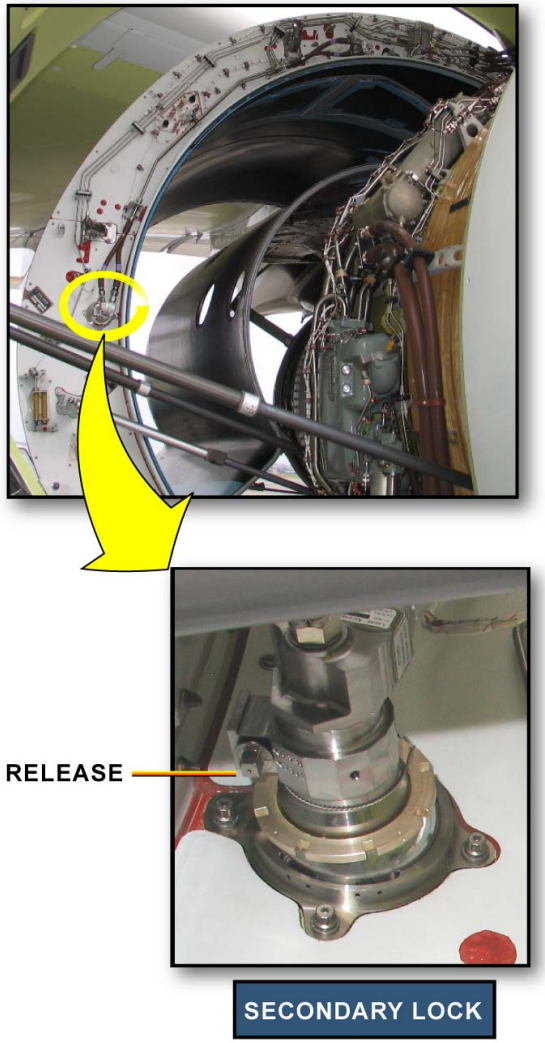

MANUALLY OPEN/CLOSE THE PIVOTING DOORS

G7508471 - G3NT1T0 - FM70Y200000071

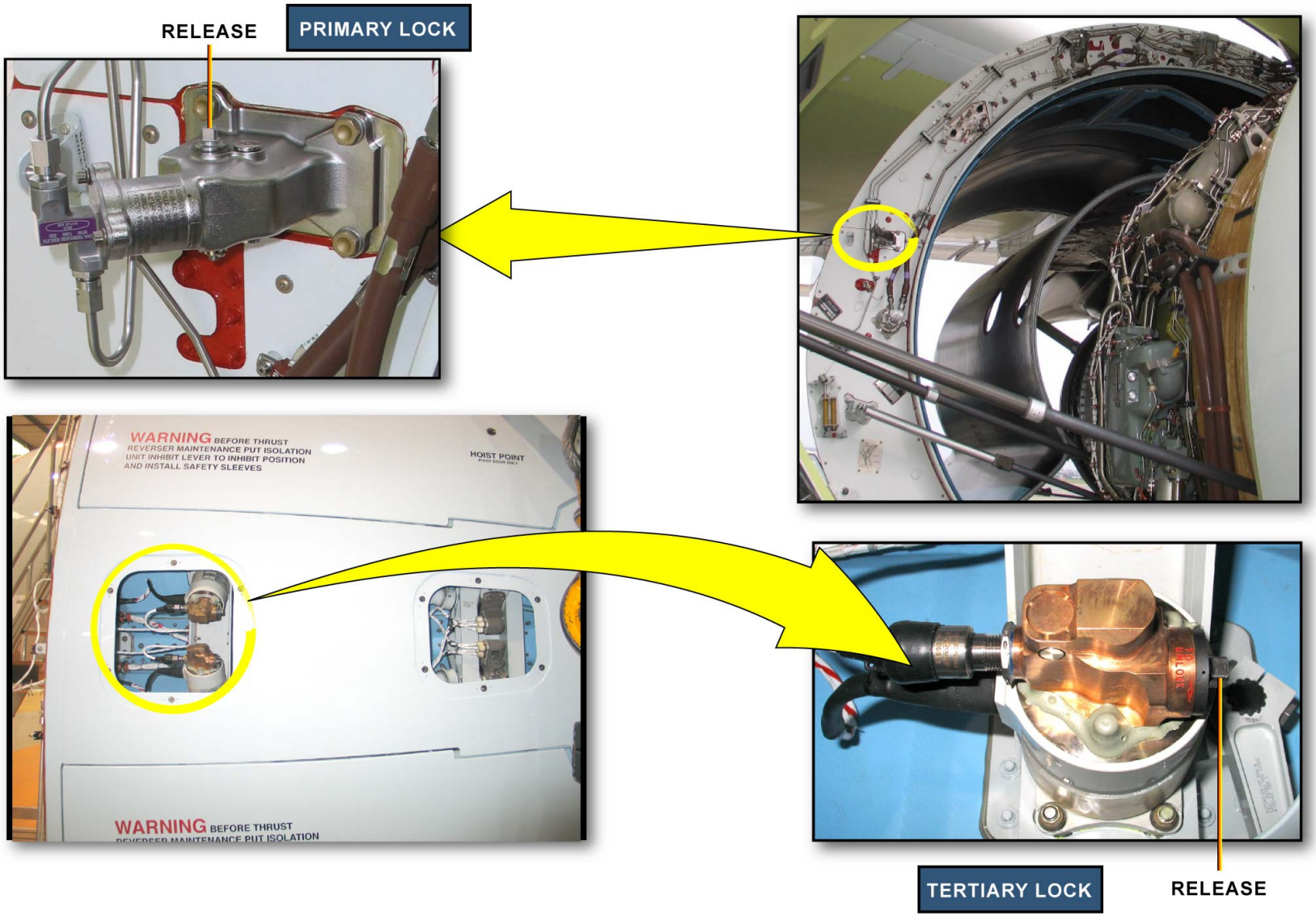

MANUALLY OPEN/CLOSE THE PIVOTING DOORS

Manually open/close the pivoting doors

...
✓ Job set-up
...

✓ Open the fan cowls.

✓ Make the thrust reverser unserviceable for maintenance.

✓ Remove the tertiary lock access panel.

...
Procedure
...

✓ Manually open the pivoting doors.

Manually close the pivoting doors.

...
Close-up
...

✓ TASK COMPLETED

MANUALLY OPEN/CLOSE THE PIVOTING DOORS

Manually open/close the pivoting doors

...

Job set-up

...

- Open the fan cowls.
- Make the thrust reverser unserviceable for maintenance.
- Remove the tertiary lock access panel.

...

Procedure

...

- Manually open the pivoting doors.
- **Manually close the pivoting doors.**
  - Remove the collar hold open pivot door from the actuator.
  - Turn the release mechanism on the primary lock and the tertiary lock counterclockwise to the unlock position.
  - Use hand pressure on the front and rear edges of the door to close the pivoting door.
  - Install the inhibition bolt between the front frame and the door. Tighten the inhibition bolt until the primary lock and the tertiary lock correctly engage their related door pins when released.
  - Remove the inhibition bolt and install it on the front frame.

...

Close-up

...

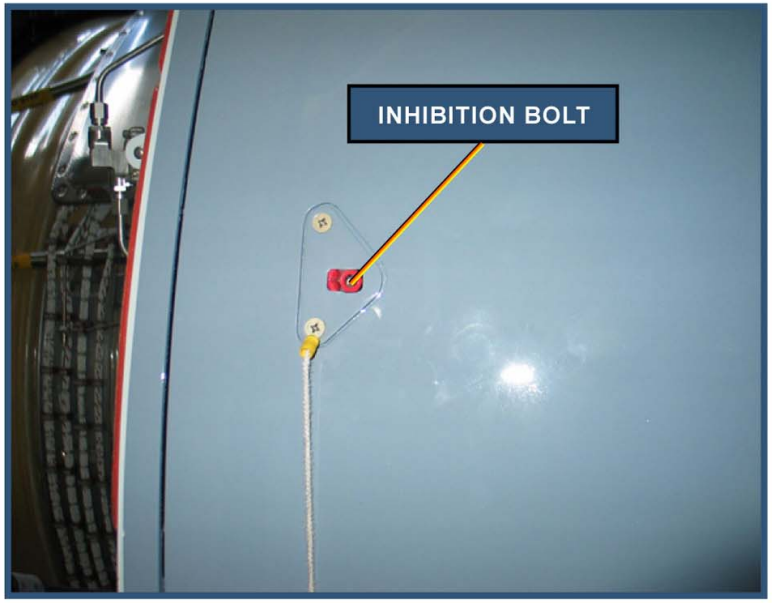

MANUALLY OPEN/CLOSE THE PIVOTING DOORS

G7508471 - G3NT1T0 - FM70Y200000071

Manually open/close the pivoting doors

...
✓ Job set-up
...

✓ Open the fan cowls.

✓ Make the thrust reverser unserviceable for maintenance.

✓ Remove the tertiary lock access panel.

...
✓ Procedure
...

✓ Manually open the pivoting doors.

✓ Manually close the pivoting doors.

...
✓ Close-up
...

✓ TASK COMPLETED

MANUALLY OPEN/CLOSE THE PIVOTING DOORS

This Page Intentionally Left Blank

G7508471 - G3NT1T0 - FM70Y200000071

POWER PLANT SYSTEM BASE MAINTENANCE (3)

REMOVAL OF THE LP COMPRESSOR BLADES AND DAMPERS

This task can be done following excessive LP shaft vibration requesting a re-lubrication of the blades or after a Foreign Object Damage (FOD) event to replace one or more blades.
Install the CNA rear cover (FK24273):

WARNING: you have to make sure that applicable covers are installed at the rear of the engine. The air entering into the engine can induce LP compressor rotation and cause injury.

Install the air intake cowl mat (HU55142).
To get access to the blades:
Remove the air intake fairing and spinner (Task 72-35-41-000-801).
Remove the annulus fillers (Task 72-31-41-802).
Make sure that the LP compressor rotor blade to remove is at the bottom of the compressor (six o'clock position).
Secure the LP compressor to the Outlet Guide Vanes (OGVs) at three equally spaced positions. This will prevent movement from the out-of-balance compressor.
Use the air intake spinner impact extractor (HU29255) and the chocking pad and slider removal adapter to, remove the slider assembly.
Hold the blade and carefully lift it radially until the rear shear key engages in the front safety slot.
continue lifting the blade until the rear shear key disengages from the front safety slot. Then pull the blade forward approximately 1 inch and lower the blade back to the bottom of the disc groove.
Pull the blade slowly forward until it is removed.
Record the radial moment weight of the LP compressor rotor blade that you removed.
Visually examine the root of each rotor blade and the applicable groove in the LP compressor disc.
Blades re-installation is the reverse process from the removal.
Install the annulus fillers.
Install the make-up piece, spinner and fairing (Task 72-35-41-400-801).

NOTE: Note: if the blades have been installed in new positions (to adjust the balance), do not install balance weights on the make-up piece. Install standard screws.

Remove the air intake cowl mat.
Remove the CNA rear cover.
Do the engine vibration survey test number 11 (Task 71-00-00-700-838).
If serviceable fan blades are removed for access and subsequently reinstalled to theirs initial positions on the same engine, it is not necessary to do a vibration survey.

G7508471 - G3NT1T0 - FM70Y200000071

Removal of the compressor blades and dampers

...
✓ **Job set-up**
...

✓ **Install the CNA rear cover.**

✓ **Install the air intake cowl mat.**

...
Procedure
...

⇨ **Get access to the LP compressor blades.**
Remove the air intake fairing and spinner.

Remove the annulus fillers.

Remove the rotor blade.

Blades re-installation is the reverse process from the removal.

...
Close-up
...

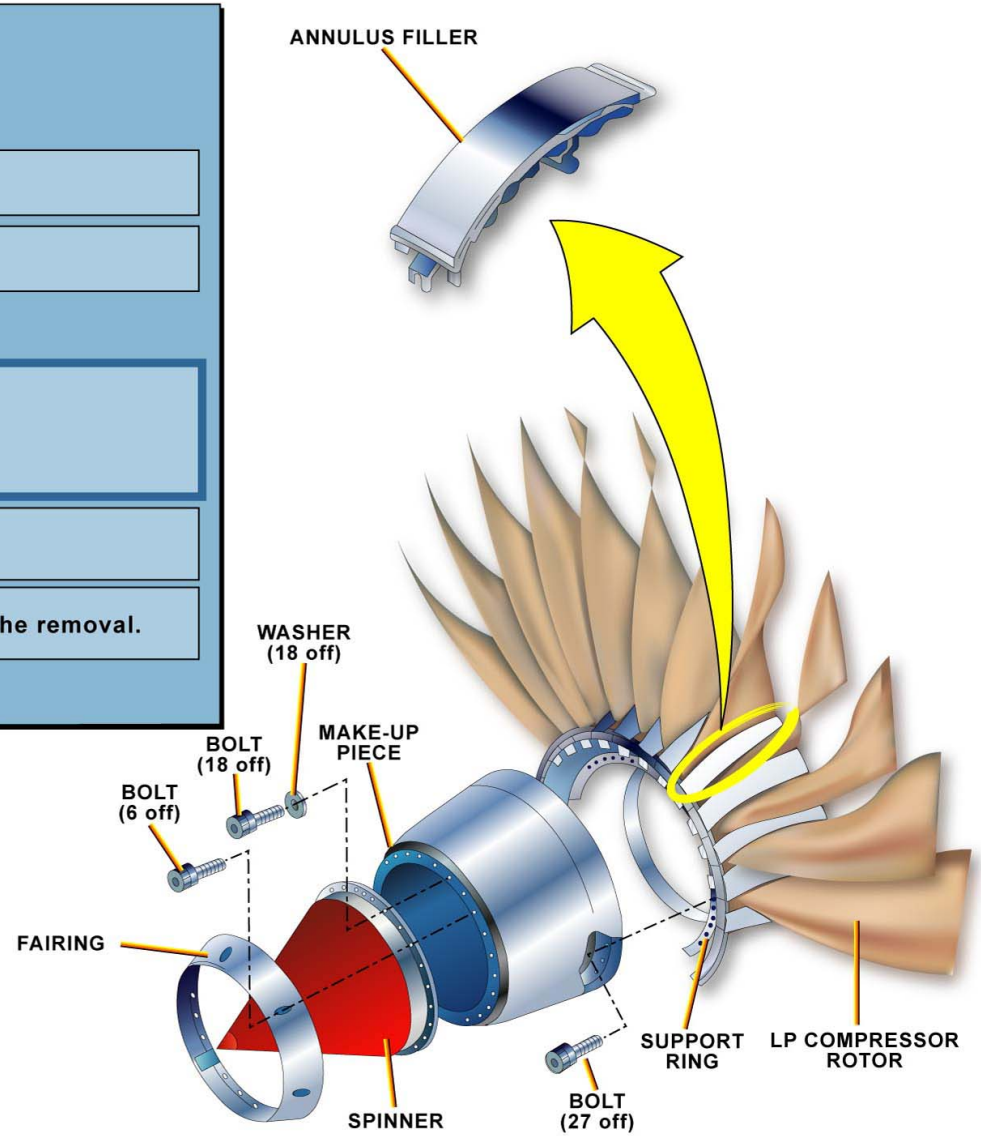

REMOVAL OF THE LP COMPRESSOR BLADES AND DAMPERS

Removal of the compressor blades and dampers

...

Job set-up

...

Install the CNA rear cover.

Install the air intake cowl mat.

...

Procedure

...

Get access to the rotor blade.

Remove the rotor blade.

Make sure that the LP compressor rotor blade to remove is at the bottom of the compressor. Secure the LP compressor to the outlet guide vanes at three equally spaced positions.

Use the air intake spinner impact extractor and the chocking pad and slider removal adapter to remove the slider assembly.

Hold the blade and carefully lift it radially until the rear shear key engages in the front safety slot. Continue lifting it until the rear shear key disengages from the front safety slot. Then pull the blade forward approximately 1 inch and lower the blade back to the bottom of the disc groove.

Pull the blade slowly forward until it is removed.

Record the radial moment weight of the LP compressor rotor blade that you have removed.

Visually examine the root of each blade and the applicable groove in the LP compressor disc.

Blades re-installation is the reverse process from the removal.

...

Close-up

...

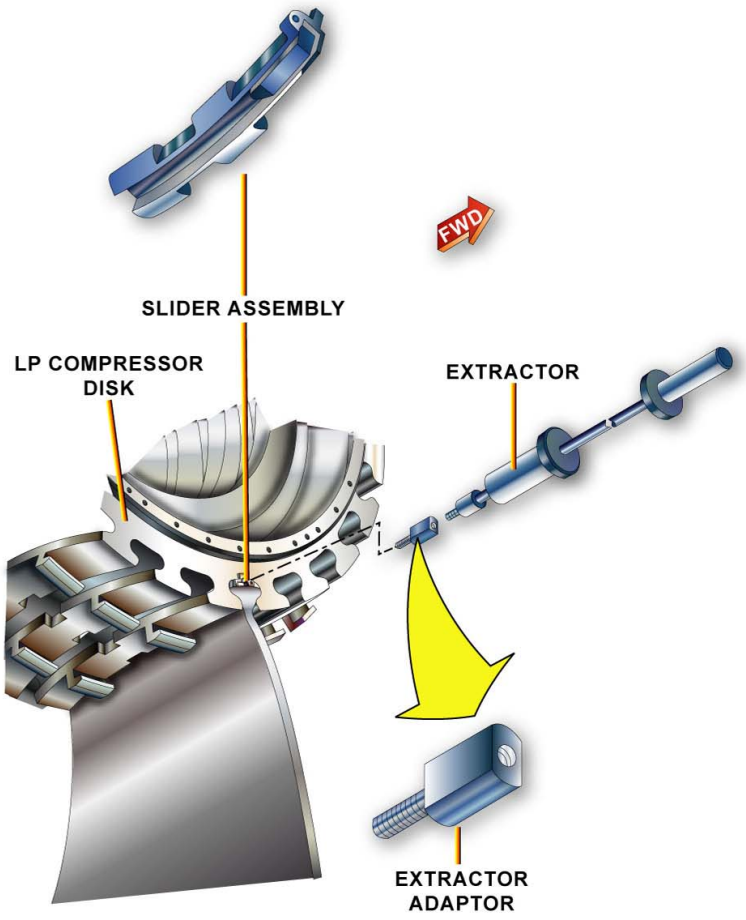

REMOVAL OF THE LP COMPRESSOR BLADES AND DAMPERS

G7508471 - G3NT1T0 - FM70Y200000071

Removal of the compressor blades and dampers

...
✓ **Job set-up**
...

✓ **Install the CNA rear cover.**

✓ **Install the air intake cowl mat.**

...
Procedure
...

✓ **Get access to the rotor blade.**

➡ **Remove the rotor blade.**

✓ Make sure that the LP compressor rotor blade to remove is at the bottom of the compressor. Secure the LP compressor to the outlet guide vanes at three equally spaced positions.

✓ Use the air intake spinner impact extractor and the chocking pad and slider removal adapter to remove the slider assembly.

Hold the blade and carefully lift it radially until the rear shear key engages in the front safety slot. Continue lifting it until the rear shear key disengages from the front safety slot. Then pull the blade forward approximately 1 inch and lower the blade back to the bottom of the disc groove.

Pull the blade slowly forward until it is removed.

Record the radial moment weight of the LP compressor rotor blade that you have removed.

Visually examine the root of each blade and the applicable groove in the LP compressor disc.

Blades re-installation is the reverse process from the removal.

...
Close-up
...

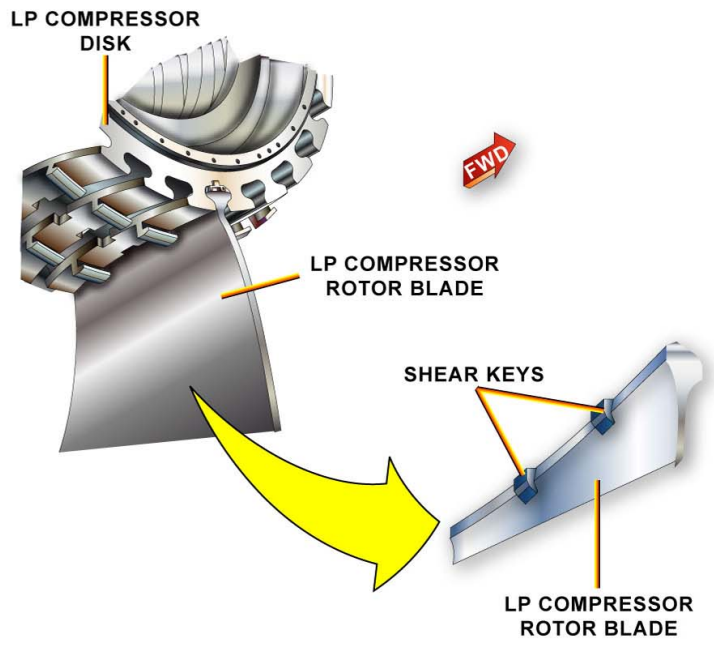

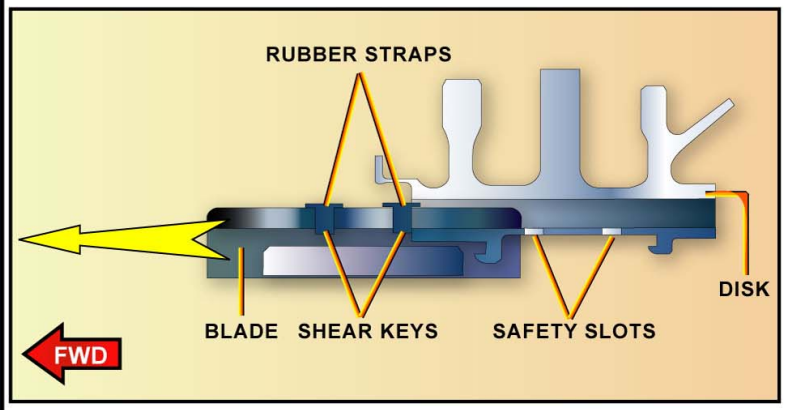

REMOVAL OF THE LP COMPRESSOR BLADES AND DAMPERS

G7508471 - G3NT1T0 - FM70Y200000071

Removal of the compressor blades and dampers

...
✓ Job set-up
...

✓ Install the CNA rear cover.

✓ Install the air intake cowl mat.

...
✓ Procedure
...

✓ Get access to the LP compressor blades.

✓ Remove the rotor blade.

✓ Blades re-installation is the reverse process from the removal.

...
✓ Close-up
...

✓ TASK COMPLETED

REMOVAL OF THE LP COMPRESSOR BLADES AND DAMPERS

This Page Intentionally Left Blank

G7508471 - G3NT1T0 - FM70Y200000071

ENGINE BASE MAINTENANCE (3)

INTRODUCTION

This module will present the maintenance tasks related to the engine storage. These tasks are:
- preservation of the power plant,
- procedure to depreserve the power plant.

CAUTION: you must do all the applicable preservation procedures when you put an engine into storage. If you do not, corrosion and general deterioration of the core engine and the fuel system can occur.

G7508471 - G3NT1T0 - FM70Y400000071

CAUTION

YOU MUST DO ALL THE APPLICABLE PRESERVATION PROCEDURES WHEN YOU PUT AN ENGINE INTO STORAGE

INTRODUCTION

ENGINE BASE MAINTENANCE (3)

PRESERVATION OF THE POWER PLANT

The preservation procedure protects the Rolls Royce TRENT 700 against corrosion, liquid and debris entering the engine and atmospheric conditions during periods of storage and inactivity.
The time during which the engine will be stored, and the climatic conditions of storage are shown in a chart.
This chart also gives the preservation procedures which must be done in different conditions and for the different storage times. Refer to the Aircraft Maintenance Manual (AMM) for specific storage requests.
To find the applicable preservation procedure you have to:
- find the climatic condition in which the power plant will be stored,
- find the time during which the power plant will be stored,
- compare this data with the chart and make the decision as to which preservation procedures must be done.

To do the preservation of the power plant:
- clean and examine the power plant,
- make sure that the power plant is dry,
- do the applicable preservation procedures,
- attach the applicable covers.

For power plants stored on-wing, desiccant must be used for protection.

NOTE: Note: it is not necessary to put desiccant and Volatile Corrosion Inhibitor (VCI) paper in installed engines, which are put into storage in the desert or in air conditioned hangars. Also, it is not necessary to put an engine into an Moisture Vapor Proof (MVP) bag if it is stored in an air-conditioned hangar.

G7508471 - G3NT1T0 - FM70Y400000071

Preservation of the power plant

...
Job set-up
...

Find the applicable preservation procedures
Find the climatic condition in which the power plant will be stored.
Find the time during which the power plant will be stored.
Compare data with the chart and choose the adequate procedure to be done.

...
Procedure
...

Do the preservation of the power plant

...
Close-up
...

	CONDITION	STORAGE TIME	PRESERVE THE MAIN LINE BEARINGS	ATTACH THE COVERS AND THE SEALS	USE VPI/CHC PAPER	INHIBIT THE FUEL SYSTEM	INSTALL DESSICANT	INSTALL A REMOVED ENGINE IN A MVP BAG
OUTSIDE	Arid - e.g. desert	Up to 30 days		*				
		31 days to 3 months		*		†		
		Over 3 months		*		*		
	Non - arid climate	Up to 30 days		*	*		*	
		31 days to 3 months		*	*	†	*	
		Over 3 months	*	*	*	*	*	*
INSIDE	Constant temperature and humidity (air conditioned)	Up to 30 days		*				
		31 days to 3 months		*		*		
		Over 3 months		*		*		
	Non - air conditioned environment	Up to 30 days		*	*		*	
		31 days to 3 months		*	*	*	*	
		Over 3 months	*	*	*	*	*	*

† The engine must be started or the fuel system must be inhibited on the 31st day of storage

If the engine fuel system is not inhibited, the engine must be started every 31 days

PRESERVATION OF THE POWER PLANT

Preservation of the power plant

...
✓ **Job set-up**
...

✓ **Find the applicable preservation procedures**

...
Procedure
...

➡ **Do the preservation of the power plant**
Clean and examine the power plant.
Make sure that the power plant is dry.
Do the applicable preservation procedures.
For power plants stored on wings, dessicant must be used for protection.
Attach the applicable covers.

...
Close-up
...

PRESERVATION OF THE POWER PLANT

Preservation of the power plant

...
✓ Job set-up
...

✓ Find the applicable preservation procedures

...
✓ Procedure
...

✓ Do the preservation of the power plant

...
✓ Close-up
...

✓ TASK COMPLETED

PRESERVATION OF THE POWER PLANT

ENGINE BASE MAINTENANCE (3)

PROCEDURE TO DEPRESERVE THE POWER PLANT

This procedure gives the details necessary to put the engine back into service after it has been in preservation.
If the engine is in a MVP bag, remove the engine frame from the MVP bag.
To do this, remove the top half of the MVP bag.
Lift the engine until it is cleared of the multi-purpose transportation stand and MVP bag.

WARNING: you must obey the safety instructions when you lift the engine. Death or injury will occur if the engine falls on persons.

Remove the bottom half of the MVP bag.
Install the engine in the multi-purpose transportation stand.
If the power plant is on-wing, get access to the protection covers and caps.
To do this, open the fan cowl doors, deactivate the thrust reverser and open the thrust reverser doors.
Remove the protection covers and caps from the engine, as applicable.
Make sure that all dessicant, protection caps, covers and tape are removed before the engine is put back into service.
Make sure that the work area is clean and clear, close the thrust reverser doors, activate the thrust reverser and close the fan cowl doors.

Procedure to depreserve the power plant

...
✓ **Job set-up**
...
Procedure
...

➡ **If the engine is in a MVP bag, remove the MVP bag.**
Remove the top half of the MVP bag.
Lift the engine.
Remove the bottom half of the MVP bag.
Install the engine in the multi-purpose transportation stand.

If the engine is on-wing, get access to the protection covers and caps

Remove the protection covers and caps

...
Close-up
...

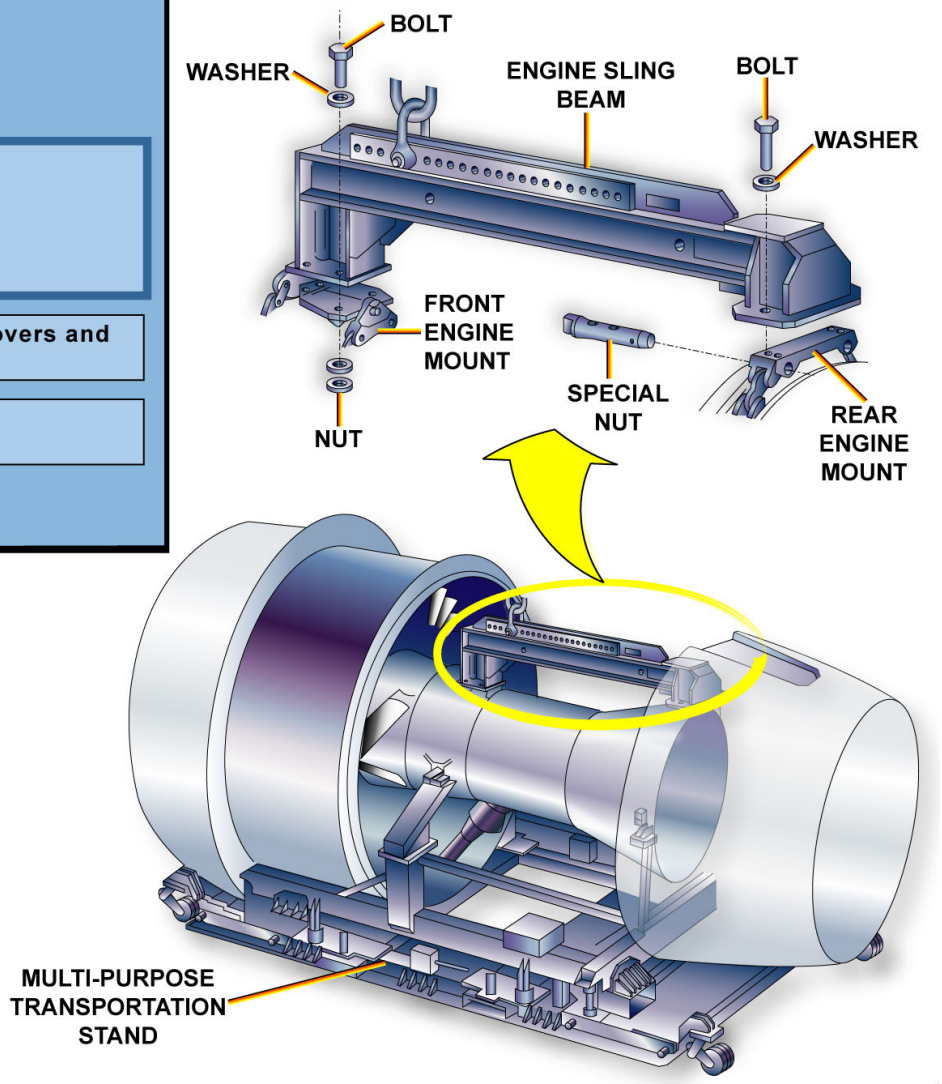

PROCEDURE TO DEPRESERVE THE POWER PLANT

Procedure to depreserve the power plant

...
Job set-up
...
Procedure
...

If the engine is in a MVP bag, remove the MVP bag

If the engine is on-wing, get access to the protection covers and caps
- Open the fan cowl doors.
- Deactivate the thrust reverser.
- Open the thrust reverser cowl doors.

Remove the protection covers and caps

...
Close-up
...

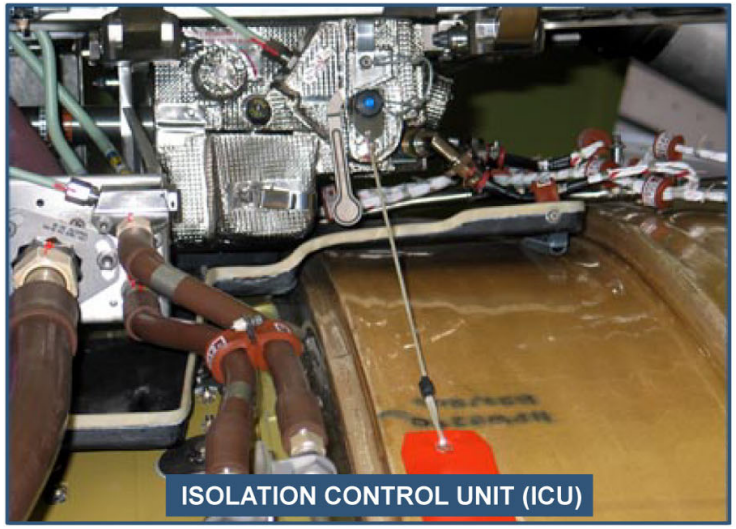

PROCEDURE TO DEPRESERVE THE POWER PLANT

G7508471 - G3NT1T0 - FM70Y400000071

Procedure to depreserve the power plant

...
✓ Job set-up
...
Procedure
...
✓ If the engine is in a MVP bag, remove the MVP bag

✓ If the engine is on-wing, get access to the protection covers and caps

⇨ Remove the protection covers and caps

...
Close-up
...

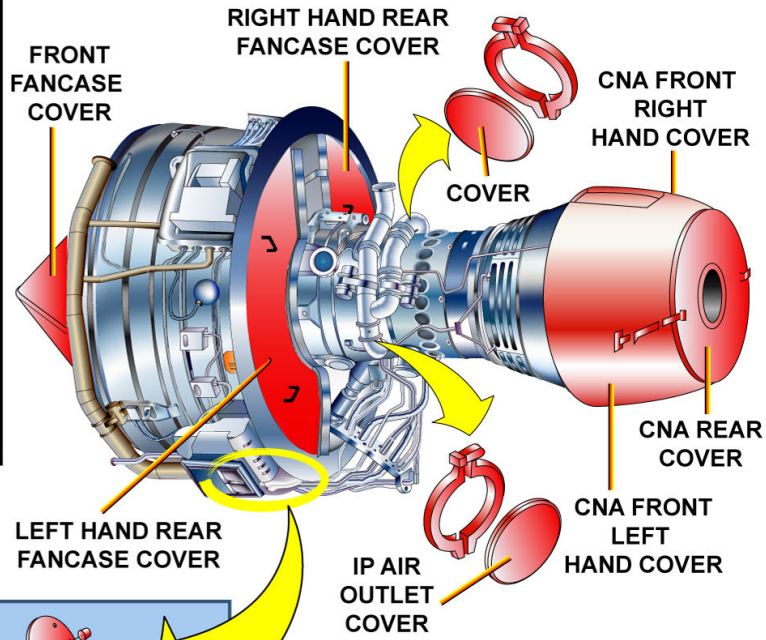

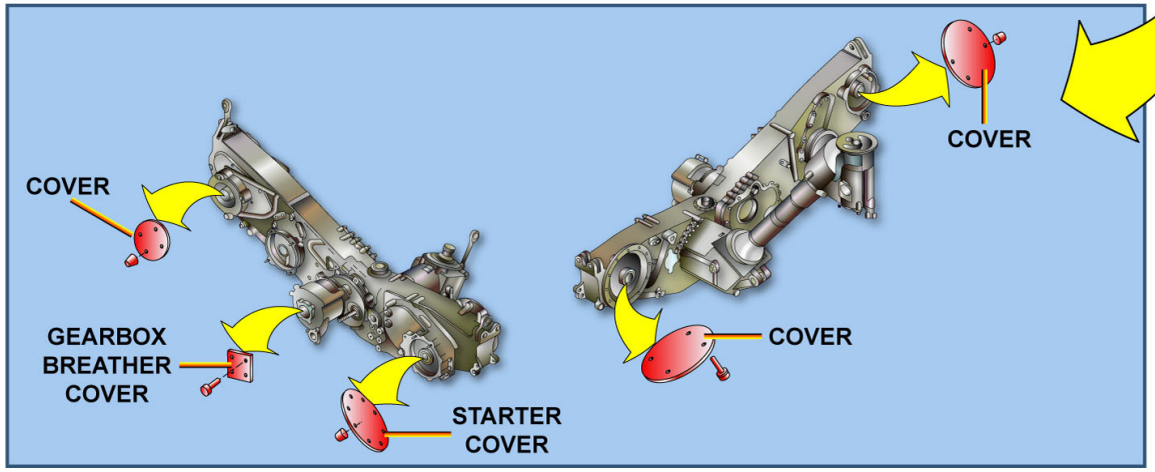

PROCEDURE TO DEPRESERVE THE POWER PLANT

G7508471 - G3NT1T0 - FM70Y400000071

Procedure to depreserve the power plant

...
✓ Job set-up
...
✓ Procedure
...
✓ If the engine is in a MVP bag, remove the MVP bag

✓ If the engine is on-wing, get access to the protection covers and caps

✓ Remove the protection covers and caps
...
✓ Close-up
...

✓ TASK COMPLETED

PROCEDURE TO DEPRESERVE THE POWER PLANT

This Page Intentionally Left Blank

G7508471 - G3NT1T0 - FM70Y400000071

AIRBUS S.A.S.
31707 BLAGNAC cedex, FRANCE
STM
REFERENCE G7508471
NOVEMBER 2008
PRINTED IN FRANCE
AIRBUS S.A.S. 2008
ALL RIGHTS RESERVED

AN EADS COMPANY

A330-200/300
TECHNICAL TRAINING MANUAL
MAINTENANCE COURSE - T1 (LVL 2&3) (RR Trent 700)
GENERAL

This document must be used for training purposes only

Under no circumstances should this document be used as a reference

It will not be updated.

All rights reserved
No part of this manual may be reproduced in any form,
by photostat, microfilm, retrieval system, or any other means,
without the prior written permission of AIRBUS S.A.S.

AIRBUS Environmental Recommendation
Please consider your environmental responsability before printing this document.

GENERAL

Trouble Shooting Procedure (2) 2
Airbus Maintenance Philosophy (2) 4

G7508471 - G3NT1T0

TROUBLE SHOOTING PROCEDURE (2)

INTRODUCTION TO TROUBLE SHOOTING PROCEDURES

The film presents the trouble shooting procedure.

G7508471 - G3NT1T0 - XM00X1000000001

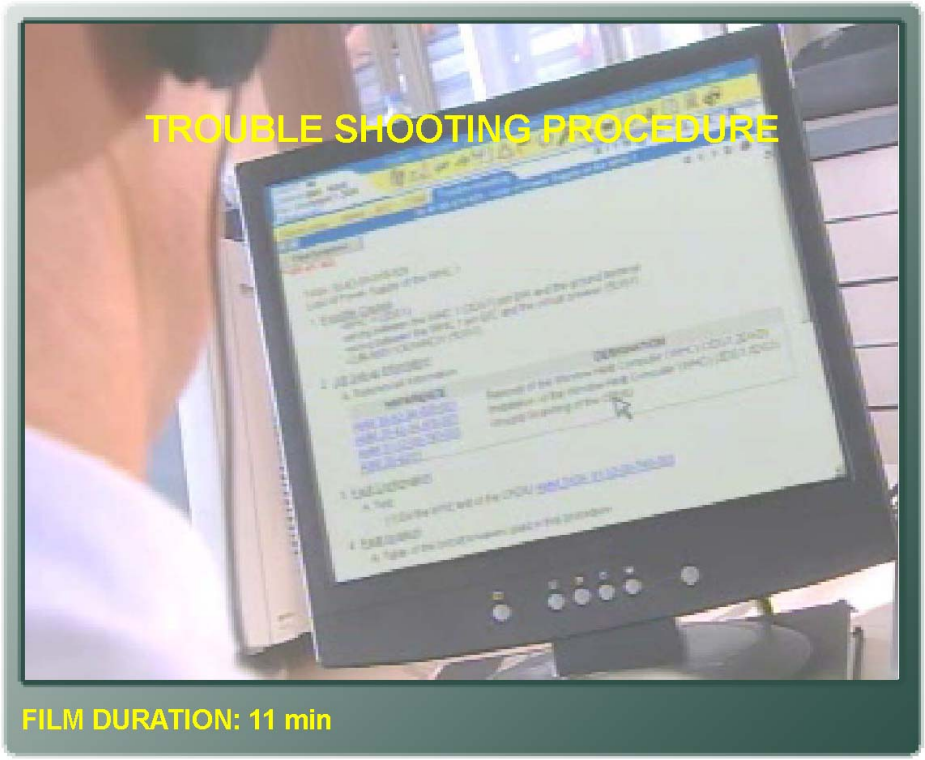

INTRODUCTION TO TROUBLE SHOOTING PROCEDURES

AIRBUS MAINTENANCE PHILOSOPHY (2)

MAINTENANCE PHILOSOPHY

The documentation system lets curative and preventive maintenance be done. AirMan is a system that collects data (fault and related causes after trouble shooting) and this is used for preventive maintenance actions on any aircraft of a fleet. Preventive maintenance actions can also be done via a maintenance control center.

CURATIVE MAINTENANCE

The technical documentation like AMM, TSM, IPC, etc..., is in two forms. It is available in the form of paper and in digital form with AirN@v. The Fly Smart with Airbus (FSA) system gives access to:
- the E-Log book in the flight crew part,
- the Minimum Equipment List (MEL) also in the flight crew part,
- the Airbus On-board Maintenance Tools (AOMT) in the maintenance part. The AOMT gives an automatic link between the Onboard Maintenance System (OMS) failure warnings or fault messages and the technical publications.

PREVENTIVE MAINTENANCE

AirMan is a system that records fleet data for preventive maintenance actions. The data acquisition is made in real time with AirMan system. With this system the maintenance work could be prepared even if the aircraft is in flight.

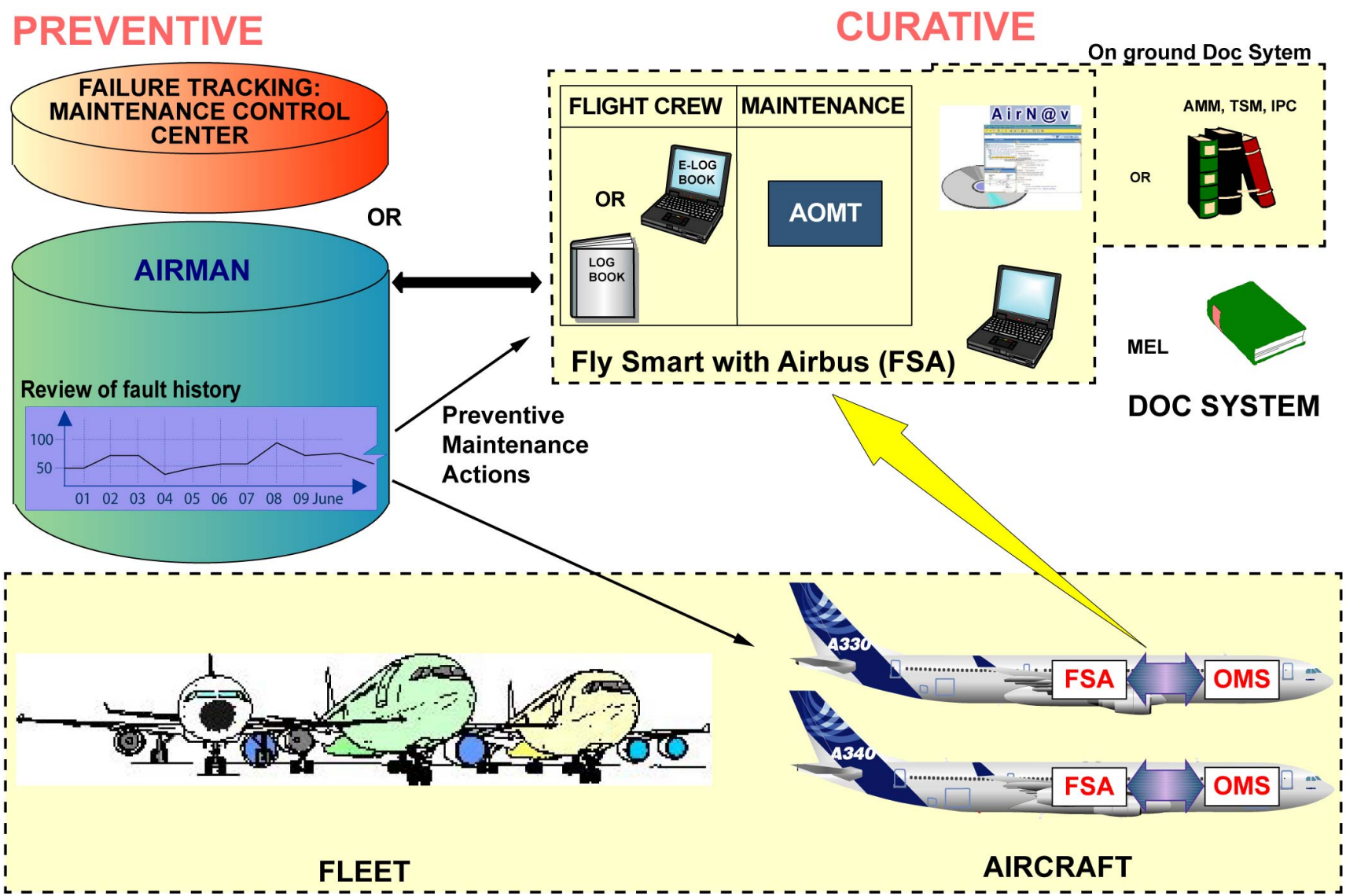

MAINTENANCE PHILOSOPHY - CURATIVE MAINTENANCE & PREVENTIVE MAINTENANCE

G7508471 - G3NT1T0 - FM01B100000001

AIRBUS MAINTENANCE PHILOSOPHY (2)

PREVENTIVE MAINTENANCE

AirMan is a knowledge database in which the maintenance experience is stored for each fault and related causes. Out of this database, the fleet is monitored, and when another aircraft has a similar configuration, a maintenance action is launched with the Maintenance Control Center (MCC) before the failure situation.

G7508471 - G3NT1T0 - FM01B1000000001

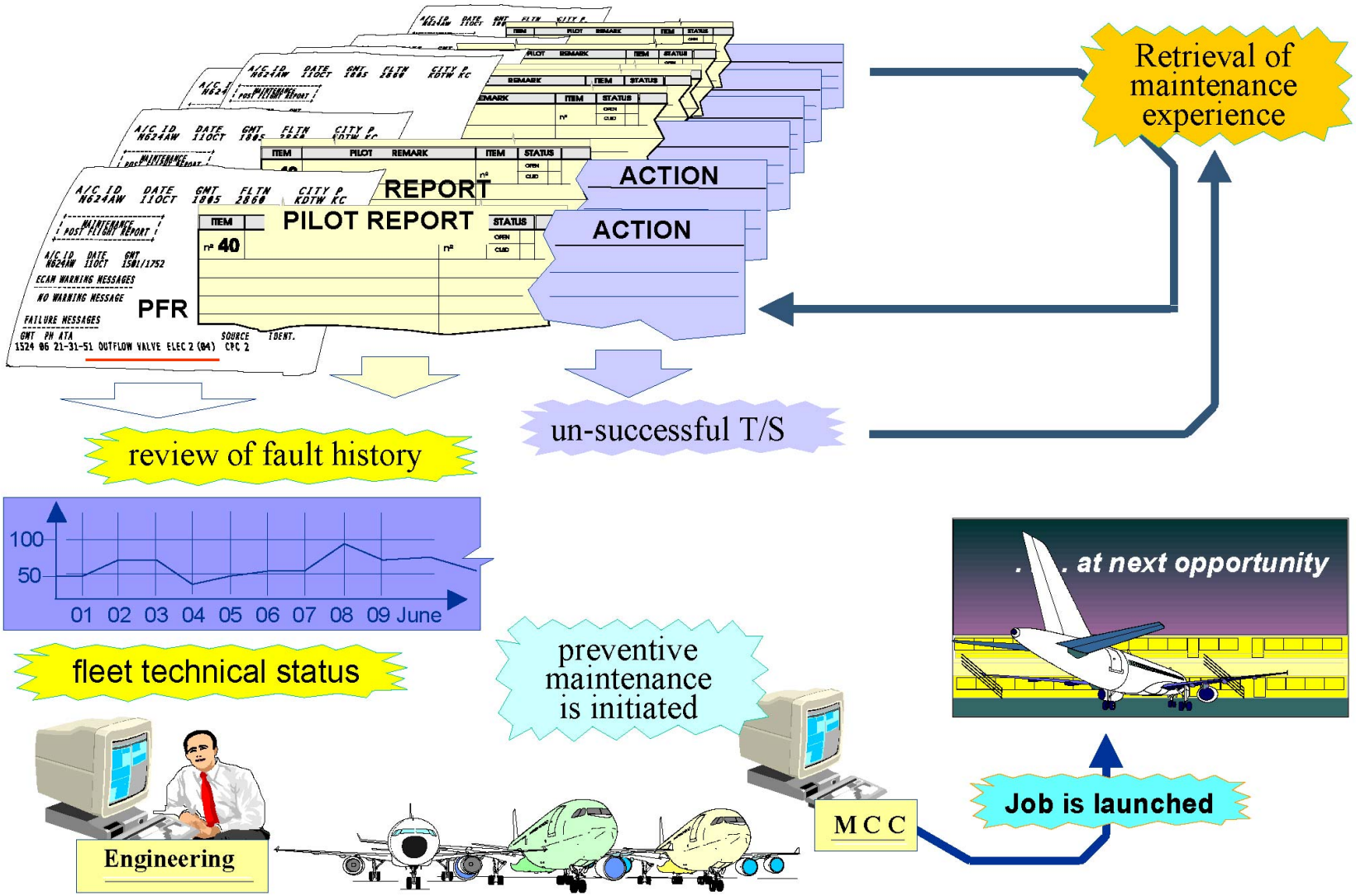

PREVENTIVE MAINTENANCE

G7508471 - G3NT1T0 - FM01B1000000001

AIRBUS MAINTENANCE PHILOSOPHY (2)

CURATIVE MAINTENANCE

The curative maintenance could be done manually or with FSA.

COCKPIT EFFECTS

After a malfunction, the crew reports the cockpit effects in the log book.

CREW REPORT

The log book is in two versions, in paper form and in electronic form as an option.

POST FLIGHT REPORT OR SYSTEM REPORT

The Post Flight Report (PFR) is accessible via the MCDU menu or through the AOMT PFR functions via the FSA. For Non ECAM related failures, the list of faults can be accessed via the MCDU or via the fault message advisor of AOMT.

DOCUMENTATION SYSTEM

The documentation system is composed of:
- the MEL also available in paper and in electronic form,
- the technical manuals available via AirN@v or in PDF or in paper.

G7508471 - G3NT1T0 - FM01B1000000001

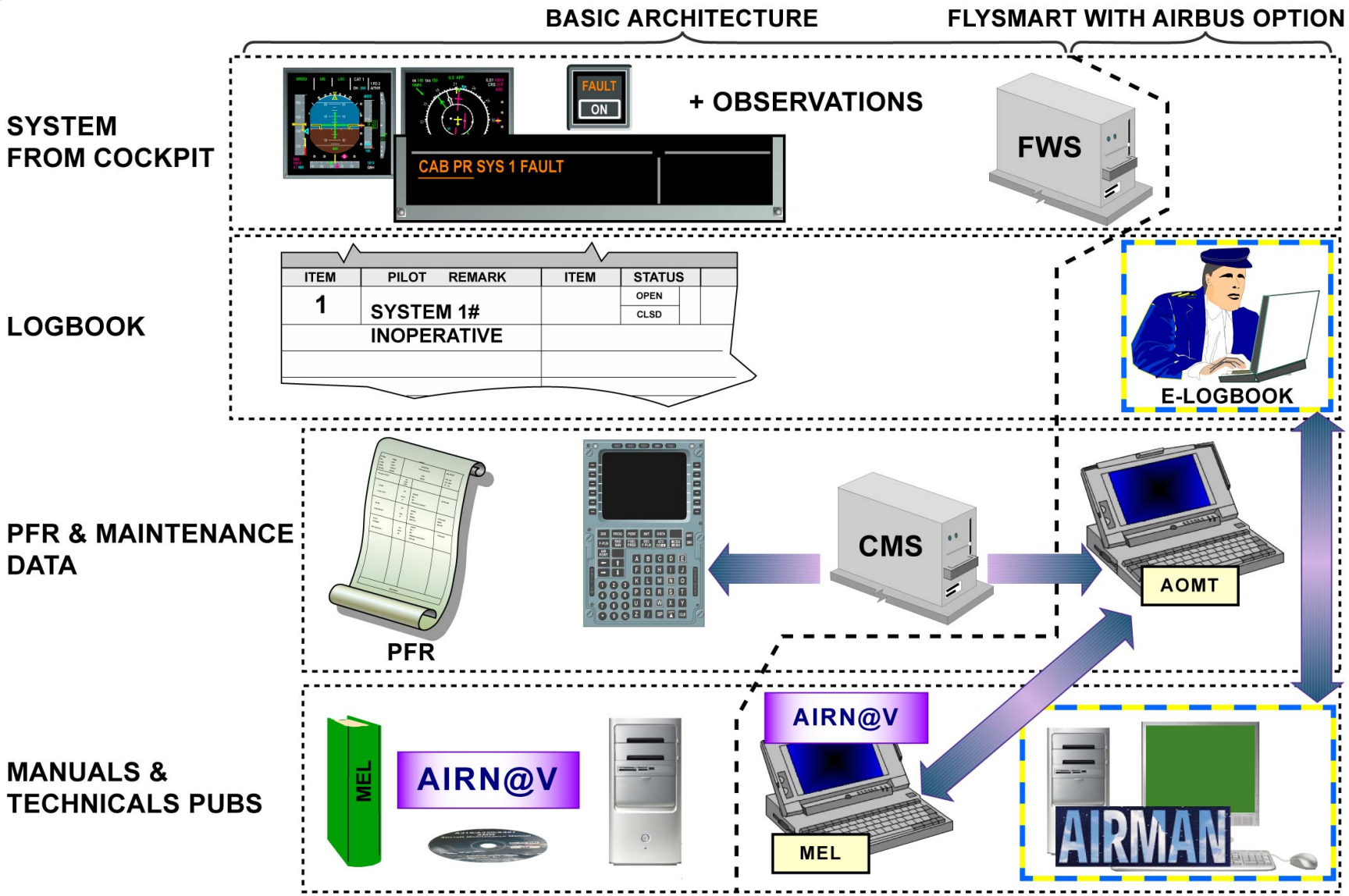

CURATIVE MAINTENANCE - COCKPIT EFFECTS ... DOCUMENTATION SYSTEM

G7508471 - G3NT1T0 - FM01B1000000001

AIRBUS MAINTENANCE PHILOSOPHY (2)

CURATIVE MAINTENANCE (continued)

FAULT ISOLATION PROCEDURE

After the use of various fault symptoms, a trouble-shooting task is selected. The related fault isolation procedure task of the TSM has a presentation of possible causes. Before isolating a fault a check of the A/C system is made to confirm the fault. It also gives the fault isolation procedure with the Line Replaceable Unit removal/installation, wiring check, etc...

G7508471 - G3NT1T0 - FM01B1000000001

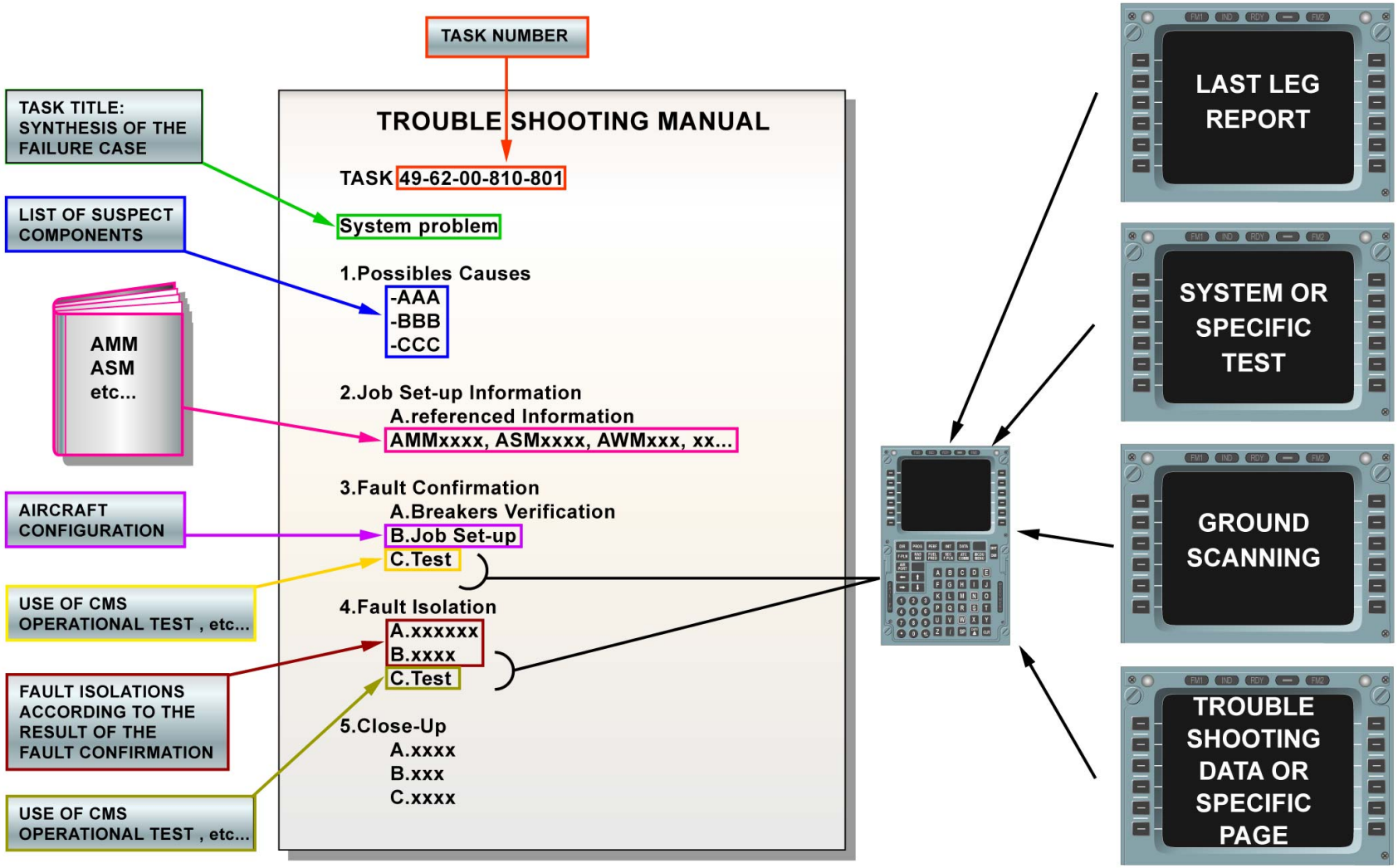

CURATIVE MAINTENANCE - FAULT ISOLATION PROCEDURE

G7508471 - G3NT1T0 - FM01B100000001

AIRBUS S.A.S.
31707 BLAGNAC cedex, FRANCE
STM
REFERENCE G7508471
NOVEMBER 2008
PRINTED IN FRANCE
AIRBUS S.A.S. 2008
ALL RIGHTS RESERVED

AN EADS COMPANY